LANL FFCO: SLUDGE SAMPLING APPENDICES; 1: SLUDGE DRUMS - GENERATION, SAMPLING AND STORAGE. 2: ANALYTICAL DATA FOR 20 SLUDGE SAMPLES. 3: ANALYTICAL METHODS, QA/QC PROCEDURES FOR SLUDGE SAMPLES

Filed LANL FFCO/88-89

12

1636

APPENDIX I

Sludge Drums -- Generation, Sampling, and Storage

APPENDIX I

Sludge Drums -- Generation, Sampling, and Storage

The following brief description of the sludge handling and sampling process for the TA-50-1 Main Plant discusses the relationship between wastewater in the Main Plant headworks and the sludge generated in the clariflocculators. It also illustrates how this sludge is drawn in batches, sampled, and placed into drums for storage.

I. Batching Sludge

Sludge is drawn from the clariflocculators to the sludge holding tank. When the sludge tank contains sufficient sludge for processing through the vacuum filter, no additional sludge is sent to the tank until what is there has been treated. At this time, the sludge contained in the sludge holding tank is considered a "batch."

For Example:

On the attached Daily Plant Logs (Attachments 1 and 2) it is noted that sludge was drawn from the main plant clariflocculators on August 9, 1989 and then again on August 30, 1989. The sludge collecting in the clariflocculators from August 10th (after the sludge draw on August 9th) through August 29th was the sludge that was moved into the sludge holding tank on August 30th. This sludge became a "batch."

II. Sampling & Treating Sludge

The sludge batch is decanted and mixed. Polymer is added if needed and then the sludge is processed through the vacuum filter. During this process, a representative grab sample of dewatered sludge is taken by the vacuum filter operator. The sample is analyzed for radioisotopes (Pu238, Pu239, Am241, U234, U235 and Gross Alpha), and for RCRA/NMHWA-regulated metals (Ag, As, Ba, Cd, Cr, Hg, Ni, Pb, Se, and Tl) - historically, by using the Extraction Procedure (EP) Toxicity Method, and later, using the Toxicity Characteristic Leaching Procedure (TCLP). Analytical and QA/QC prcedures used are provided in Appendix III. This sample, and its analysis results, are considered representative of the batch being treated, and thereby also representative of each drum of dewatered sludge produced during the treatment of this batch of sludge.

For Example:

The Vacuum Filter Solids Laboratory Analyses form attached (See Attachment 3) shows the analysis for the dewatered sludge sample taken on September 9, 1989 for the batch of sludge described earlier in Example 1. Note the sample I.D. number on the form: 89.73908.

Other analysis information regarding this batch of sludge, for example Volatile and Semi-Volatile Organics analysis, is derived from the analysis of wastewater at the headworks of the plant during the time that this batch of sludge was forming in the clariflocculators. In this case, the analyses to be considered would be those for water samples taken between the dates of August 9, 1989 and August 30, 1989. The assumption in this situation is that if a given constituent is not present in the wastewater entering the facility, then it cannot be present in the sludge produced by the treatment of that wastewater.

If the addition of new sludge to the sludge holding tank becomes necessary before the treatment of a batch is complete, the contents of the sludge holding tank become a *new* batch and this process will start over from the beginning.

III. Sludge Drum Identification

To each drum produced is attached a brass tag with a unique number. A list of the brass tags used for the drums made during each batch is kept by the vacuum filter operator. Drums are shipped to TA-54, Area L for storage, where each drum is assigned an additional identification number by Area L.

For Example:

The Sludge Drum Data form (See Attachment 4) is kept by the vacuum filter operator. For each drum made both the date and the brass tag drum number are recorded. The drums noted in this example are the drums which were made from the sludge batch described in Examples 1 and 2. We know this because the drums made prior to these were made before the sludge draw on August 30, 1989 and the drums following were made after a sludge draw on October 4, 1989. The Radioactive Solid Waste Disposal Record form (See Attachment 5) lists the tag numbers of the drums included in the shipment of drums to TA-54, Area L.

ATTACHMENT: 1
Daily Plant Log: August 9, 1989

DAILY LOG
TA-50-1 PLANT

DATE: 9 Aug 1989 DAY: Wednesday

INFLUENT TANK LEVELS (PERCENT)

	0800	1700	0800 NEXT DAY
TANK #1 (25K GAL)	20.42	21.15	21.20
TANK #2 (75K GAL)	33.62	20.96	30.16
TANK #3 (100K GAL)			

* *

WAS PLANT OPERATED?	(YES)	NO	
WAS A TANK DRAINED?	YES	(NO)	
WAS DP-257 TRANSFERRED?	YES	(NO)	_____ LITERS
WAS WASTE PUMPED FROM OMEGA?	YES	(NO)	_____ LITERS
WAS A TANK RECIRCULATED?	YES	(NO)	_____ LITERS
WAS FILTER BACKWASHED?	YES	(NO)	_____ LITERS
MISC. INFLUENT VOLUME:	YES	(NO)	_____ LITERS

SLUDGE DRAWOFF: BEGINNING LEVEL = 22 FT 4 IN
ENDING LEVEL = 2 FT 0 IN

* *

PLANT START-UP TIME		PLANT SHUT-DOWN TIME	
07 HRS	30 MIN	08 HRS	45 MIN
19 HRS	15 MIN	22 HRS	15 MIN
HRS	MIN	HRS	MIN

* *

EFFLUENT TANK LEVELS (METERS)

		BEGINNING LEVEL	ENDING LEVEL	RECIRC.?
TANK #1 (SOUTH)	1	2.60	4.40	
	1			
	1			
	1			
	1			
	1			
TANK #2 (NORTH)	2	0.50		
	2			
	2			
	2			
	2			
	2			

ATTACHMENT: 2
Daily Plant Log: August 30, 1989

DAILY LOG
TA-50-1 PLANT

DATE: 30 Aug 1989 DAY: Wednesday

INFLUENT TANK LEVELS (PERCENT)

	0800	1700	0800 NEXT DAY
TANK #1 (25K GAL)	3.96	0.00	-0-
TANK #2 (75K GAL)	35.55	2.73%	13.70
TANK #3 (100K GAL)			

* *

WAS PLANT OPERATED?	(YES)	NO	
WAS A TANK DRAINED?	(YES)	NO	
WAS DP-257 TRANSFERRED?	YES	(NO)	_____ LITERS
WAS WASTE PUMPED FROM OMEGA?	YES	(NO)	_____ LITERS
WAS A TANK RECIRCULATED?	YES	(NO)	_____ LITERS
WAS FILTER BACKWASHED?	YES	(NO)	_____ LITERS
MISC. INFLUENT VOLUME:	YES	(NO)	_____ LITERS

SLUDGE DRAWOFF: BEGINNING LEVEL = 21 FT 4 IN
ENDING LEVEL = 14 FT [illegible] IN

* *

PLANT START-UP TIME	PLANT SHUT-DOWN TIME
10 HRS 45 MIN	13 HRS 30 MIN
HRS MIN	HRS MIN
HRS MIN	HRS MIN

* *

EFFLUENT TANK LEVELS (METERS)

		BEGINNING LEVEL	ENDING LEVEL	RECIRC.?
TANK #1 (SOUTH)	1	4.40	4.40 from DP	N
	1	0.50	2.00	
	1			
	1			
	1			
	1			
TANK #2 (NORTH)	2	0.50	4.40	N
	2	0.50		
	2			
	2			
	2			
	2			

ATTACHMENT: 3
Vacuum Filter Solids Laboratory Analyses: August 11, 1989

VACUUM FILTER SOLIDS
LABORATORY ANALYSES

SAMPLE SUBMITTED BY: Moss/Castillo/Harris DATE: 9-11-89

ORIGIN OF SAMPLE(S): TA-50 BP-257 DATE SAMPLED: 9-7-89

DESCRIPTION: Radiochem Analyses of Filtercake from TA-50 BP-257 Vacuum Filter

[(50S) (21-257S)]

LABORATORY I.D. NUMBER: 89.73908

TEST/ ANALYSIS		RESULT/CONCENTRATION	DATE BEGUN	METHOD	ANAL. BY
Gross Alpha		1[illegible] ± [illegible] mCi/g	9/11	ALPHA	JZ
^{234}U		900 ± 170 pCi/g	9/15	RAS	TDF
^{235}U		70 ± 50 pCi/g	9/15	RAS	TDF
^{238}Pu		27 ± 3 mCi/g	9/12	RAS	TDF
^{239}Pu		88 ± 10 mCi/g	9/12	RAS	TDF
^{241}Am		44 ± 7 mCi/g	9/11	~~RAS~~ GEL	TDF
% Solids		29.4 ± 0.6	9/11	GRAV	TDF
EP TOX	Ag	23 ± 3 µg/L	10/10	272.2	MCW
	As	~~[illegible]~~ 5.1 ± 2 µg/L	10/16/89	206.2	[illegible]
	Ba	2.8 ± .3 mg/L	11/7	208.1	"
	Cd	0.29 ± .1 µg/L	9/29/89	213.2	[illegible]
	Cr	7.2 ± 2 µg/L	12-4-89	218.2	"
	Hg	<0.2 ± .2 µg/L	10-4	245.1	MAB
	Ni	0.061 ± .04 mg/L	11-17	249.1	[illegible]
	Pb	6 ± 1 µg/L	9/29/89	239.2	[illegible]
	Se	<1.0 ± 1.0 µg/L	10/16/89	270.2	[illegible]
	Tl	1.0 ± 1.0 µg/L	11/2/89	279.2	[illegible]

Remarks:

APPROVED BY: [illegible] DATE: 12-11-89

HZLAB35A REV. 02-88

ATTACHMENT: 4
Sludge Drum Data: September 11-15, 1989

C O N T A M

H-7 - ENGR-94

SLUDGE DRUM DATA

DATE	Drum Number	Weight of Sludge Drums (Kilograms) Gross (sludge & cont)	Net (sludge only)	~~Void Space at top of Sludge Container~~ Drum No	Total Vol. of Sludge Packaged (Liters)
9/11/89	1	460		455	208
	2	410		456	208
	3	[redacted]		[redacted]	
	4	490		457	208
	5	485		458	208
	6	530		459	208
	7	615		460	208
	8	475		461	208
	9	540		462	208
9/12/89	1	537		463	208
" "	2	556		464	208
"	3	468		465	208
"	4	463		466	208
"	5	490		467	208
"	6	516		468	208
"	7	515		469	208
"	8	506		470	208
	9	510		471	208
	This Page	8566		17	3536
	TOTAL	20,574 lbs	Avg 502 lb	41	8528 l

5436 Kg

LIQUID WASTE TREATMENT FACILITY TA-50

Los Alamos National Laboratory

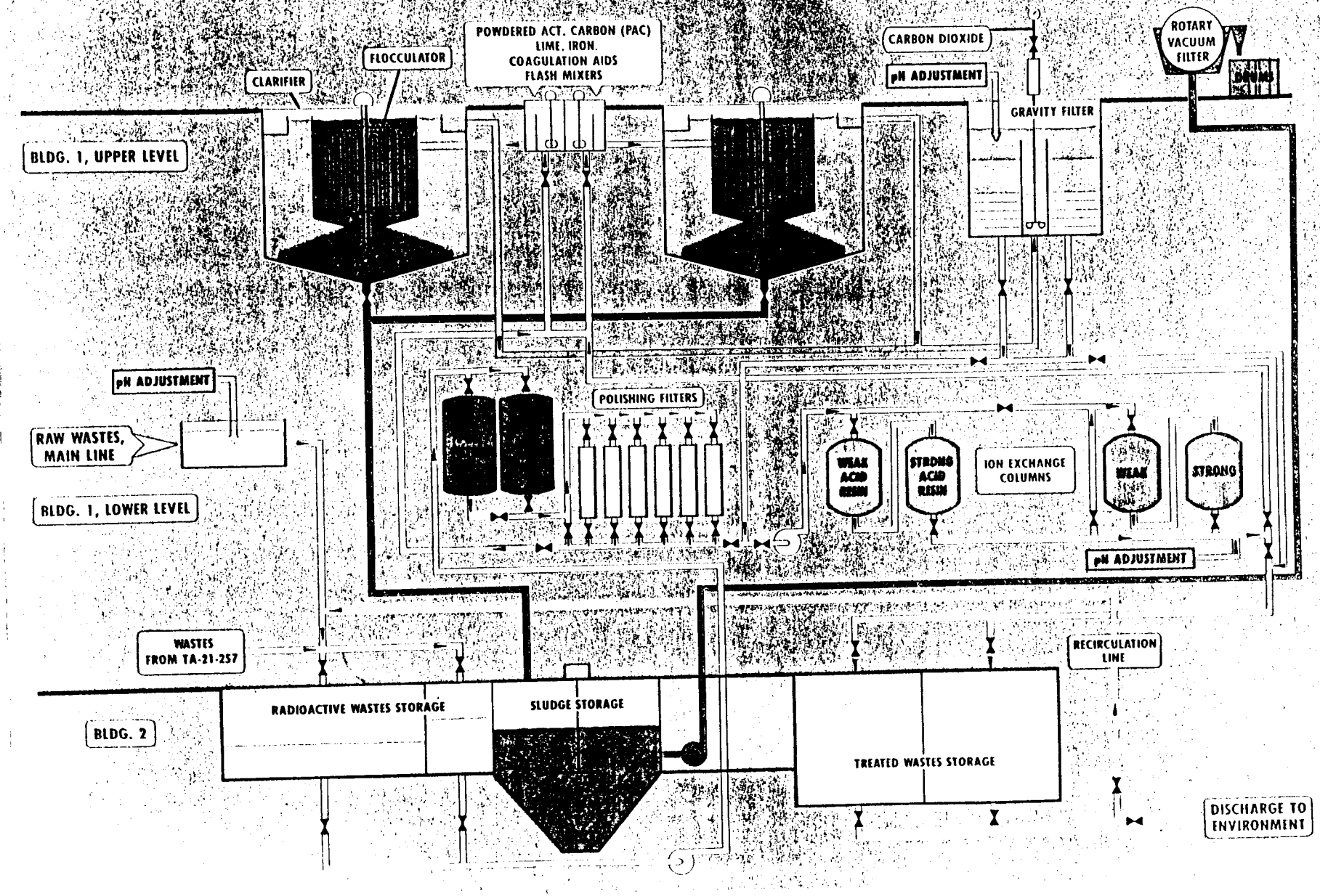

CN 83-1769

APPENDIX II

Analytical Data for 20 Sludge Samples

sludge stuff for response to request.....dlh

1	88.73902 2/19/88	
2	88.73903 3/2/88	
3	88.73906 7/6/88	
4	88.73909 9/9/88	
5	88.79310 10/24/88	
6	88.73911 11/17/88	
7	89.73902 2/7/89	complete labwork in plant file
8	89.73903 3/14/89	complete labwork in plant file
9	89.79304 5/4/89	complete labwork in plant file
10	89.73906 7/3/89	complete labwork in plant file
11	89.73908 9/11/89	complete labwork in plant file
12	89.73909 10/10/89	
13	90.73901 1/11/90	
14	90.73902 2/14/90	
15	90.73905 4/11/90	
16	90.73906 5/10/90	
17	90.73907 6/21/90	
18	90.73908 8/15/90	
19	90.73910 10/12/90	no labwork in plant file
20	90.73911 12/05/90	

SAMPLE NUM	OWNER	MATRIX	ANALYSIS	REQUEST NUM	REQUESTOR	REQUEST DATE	DUE DATE	PROJECT NUM
88.73902	JRB	C	ALPHA	09999	50S	2/19/88		W579
JL	PC		577.0000	7.0000	NCI/G		2/25/88	R
				1				
88.73902	JRB	C	%SOLIDS	09999	50S	2/19/88		W579
TDF	GRAV		24.9000	0.4000	NONE		2/25/88	R
				1				
88.73902	JRB	C	AM-241	09999	50S	2/19/88		W579
TDF	GELI		85.0000	13.0000	NCI/G		2/25/88	R
				1				
88.73902	JRB	C	CO-57	09999	50S	2/19/88		W579
TDF	GELI		26.0000	4.0000	NCI/G		2/25/88	R
				1				
88.73902	JRB	C	CO-60	09999	50S	2/19/88		W579
TDF	GELI		45.0000	7.0000	NCI/G		2/25/88	R
				1				
88.73902	JRB	C	CO-58	09999	50S	2/19/88		W579
TDF	GELI		9.2000	1.8000	NCI/G		2/25/88	R
				1				
88.73902	JRB	C	MN-54	09999	50S	2/19/88		W579
TDF	GELI		9.9000	1.6000	NCI/G		2/25/88	R
				1				
88.73902	JRB	C	SR-85	09999	50S	2/19/88		W579
TDF	GELI		7.4000	1.7000	NCI/G		2/25/88	R
				1				
88.73902	JRB	C	SE-75	09999	50S	2/19/88		W579
TDF	GELI		34.0000	5.0000	NCI/G		2/25/88	R
				1				
88.73902	JRB	C	SN-113	09999	50S	2/19/88		W579
TDF	GELI		14.0000	2.0000	NCI/G		2/25/88	R
				1				
88.73902	JRB	C	NB-95	09999	50S	2/19/88		W579
TDF	GELI		6.7000	1.3000	NCI/G		2/25/88	R
				1				
88.73902	JRB	C	Y-88	09999	50S	2/19/88		W579
TDF	GELI		31.0000	5.0000	NCI/G		2/25/88	R
				1				
88.73902	JRB	C	ZN-65	09999	50S	2/19/88		W579
TDF	GELI		28.0000	4.0000	NCI/G		2/25/88	R
				1				
88.73902	JRB	C	CO-56	09999	50S	2/19/88		W579
TDF	GELI		3.3000	1.3000	NCI/G		2/25/88	R
				1				
88.73902	JRB	C	CR-51	09999	50S	2/19/88		W579
TDF	GELI		15.0000	11.0000	NCI/G		2/25/88	R
				1				
88.73902	JRB	C	PU-239	09999	50S	2/19/88		W579
TDF	RAS	R	575.0000	62.0000	NCI/G		2/29/88	R
				1				
88.73902	JRB	C	PU-239	09999	50S	2/19/88		W579
TDF	RAS	R	616.0000	67.0000	NCI/G		2/29/88	R
				1				
88.73902	JRB	C	PU-238	09999	50S	2/19/88		W579
TDF	RAS	R	47.0000	6.0000	NCI/G		2/29/88	R
				1				
88.73902	JRB	C	PU-238	09999	50S	2/19/88		W579
TDF	RAS	R	47.0000	6.0000	NCI/G		2/29/88	R

						1				
88.73902	JRB	C	U-234		09999	50S		2/19/88		W579
TDF	RAS		R	600.0000		300.0000	PCI/G		2/29/88	R
						1				
88.73902	JRB	C	U-234		09999	50S		2/19/88		W579
TDF	RAS		R	530.0000		290.0000	PCI/G		2/29/88	R
						1				
88.73902	JRB	C	U-235		09999	50S		2/19/88		W579
TDF	RAS		R	10.0000		140.0000	PCI/G		2/29/88	R
						1				
88.73902	JRB	C	U-235		09999	50S		2/19/88		W579
TDF	RAS		R	10.0000		140.0000	PCI/G		2/29/88	R
						1				
88.73902	JRB	WE	BA		09999	50S		2/19/88		W579
TMF	FAA		R	0.3800		0.0400	MG/L		3/15/88	R
						1				
88.73902	JRB	WE	BA		09999	50S		2/19/88		W579
TMF	FAA		R	0.3900		0.0400	MG/L		3/15/88	R
						1				
88.73902	JRB	WE	AG		09999	50S		2/19/88		W579
MCW	FAA		R	0.0980		0.0100	MG/L		5/27/88	R
						1				
88.73902	JRB	WE	AG		09999	50S		2/19/88		W579
MCW	FAA		R	0.0890		0.0100	MG/L		5/27/88	R
						1				
88.73902	JRB	WE	AS		09999	50S		2/19/88		W579
MCW	ETVAA		R	3.7000		2.0000	UG/L		5/27/88	R
						1				
88.73902	JRB	WE	AS		09999	50S		2/19/88		W579
MCW	ETVAA		R	2.9000		2.0000	UG/L		5/27/88	R
						1				
88.73902	JRB	WE	CD		09999	50S		2/19/88		W579
TMF	ETVAA			4.1000		0.8000	UG/L		5/27/88	R
						1				
88.73902	JRB	WE	CR		09999	50S		2/19/88		W579
TMF	ETVAA		R	13.0000		3.0000	UG/L		5/27/88	R
						1				
88.73902	JRB	WE	CR		09999	50S		2/19/88		W579
TMF	ETVAA		R	14.0000		3.0000	UG/L		5/27/88	R
						1				
88.73902	JRB	WE	HG		09999	50S		2/19/88		W579
TMF	CVAA			1.1000		0.2000	UG/L		5/27/88	R
						1				
88.73902	JRB	WE	NI		09999	50S		2/19/88		W579
MCW	FAA		R	0.4200		0.0400	MG/L		5/27/88	R
						1				
88.73902	JRB	WE	NI		09999	50S		2/19/88		W579
MCW	FAA		R	0.4300		0.0400	MG/L		5/27/88	R
						1				
88.73902	JRB	WE	PB		09999	50S		2/19/88		W579
TMF	ETVAA			48.0000		10.0000	UG/L		5/27/88	R
						1				
88.73902	JRB	WE	SE		09999	50S		2/19/88		W579
TMF	ETVAA		<	1.0000		0.0000	UG/L		5/27/88	R
						1				
88.73902	JRB	WE	SE		09999	50S		2/19/88		W579
TMF	ETVAA		<	1.0000		0.0000	UG/L		5/27/88	R
						1				

```
                                        1
88.73903  JRB   C     PU-239      09999  50S          3/21/88          W579
  TDF     RAS       R        137.0000    15.0000  NCI/G        3/25/88   R
                                        1
88.73903  JRB   C     PU-239      09999  50S          3/21/88          W579
  TDF     RAS       R        144.0000    16.0000  NCI/G        3/25/88   R
                                        1
88.73903  JRB   WE    AG          09999  50S          3/21/88          W579
  TMF     FAA       R          0.0160     0.0030  MG/L         6/08/88   R
                                        1
88.73903  JRB   WE    AG          09999  50S          3/21/88          W579
  TMF     FAA       R          0.0170     0.0030  MG/L         6/08/88   R
                                        1
88.73903  JRB   WE    AS          09999  50S          3/21/88          W579
  TMF     ETVAA     R          6.6000     0.7000  UG/L         6/08/88   R
                                        1
88.73903  JRB   WE    AS          09999  50S          3/21/88          W579
  TMF     ETVAA     R          5.8000     0.6000  UG/L         6/08/88   R
                                        1
88.73903  JRB   WE    CD          09999  50S          3/21/88          W579
  TMF     ETVAA     R          0.2200     0.1000  UG/L         6/08/88   R
                                        1
88.73903  JRB   WE    CD          09999  50S          3/21/88          W579
  TMF     ETVAA     R          0.1900     0.1000  UG/L         6/08/88   R
                                        1
88.73903  JRB   WE    CR          09999  50S          3/21/88          W579
  TMF     ETVAA     R         15.0000     3.0000  UG/L         6/08/88   R
                                        1
88.73903  JRB   WE    CR          09999  50S          3/21/88          W579
  TMF     ETVAA     R         16.0000     3.0000  UG/L         6/08/88   R
                                        1
88.73903  JRB   WE    HG          09999  50S          3/21/88          W579
  TMF     CVAA      <          0.2000     0.0000  UG/L         6/08/88   R
                                        1
88.73903  JRB   WE    HG          09999  50S          3/21/88          W579
  TMF     CVAA      <          0.2000     0.0000  UG/L         6/08/88   R
                                        1
88.73903  JRB   WE    NI          09999  50S          3/21/88          W579
  TMF     FAA       R          0.0750     0.0400  MG/L         6/08/88   R
                                        1
88.73903  JRB   WE    NI          09999  50S          3/21/88          W579
  TMF     FAA       R          0.0810     0.0400  MG/L         6/08/88   R
                                        1
88.73903  JRB   WE    NI          09999  50S          3/21/88          W579
  TMF     FAA       R          0.0820     0.0400  MG/L         6/08/88   R
                                        1
88.73903  JRB   WE    PB          09999  50S          3/21/88          W579
  TMF     ETVAA     R          6.6000     1.0000  UG/L         6/08/88   R
                                        1
88.73903  JRB   WE    PB          09999  50S          3/21/88          W579
  TMF     ETVAA     R          6.5000     1.0000  UG/L         6/08/88   R
                                        1
88.73903  JRB   WE    SE          09999  50S          3/21/88          W579
  TMF     ETVAA     <          1.0000     0.0000  UG/L         6/08/88   R
                                        1
88.73903  JRB   WE    SE          09999  50S          3/21/88          W579
  TMF     ETVAA     <          1.0000     0.0000  UG/L         6/08/88   R
                                        1
88.73903  JRB   WE    BA          09999  50S          3/21/88          W579
  TMF     FAA       R          0.7100     0.0700  MG/L         7/20/88   R
```

SAMPLE NUM	OWNER	MATRIX	ANALYSIS	REQUEST NUM	REQUESTOR	REQUEST DATE	DUE DATE	PROJECT NUM
88.73903	JRB	C	ALPHA	09999	50S	3/21/88		W579
TDF	PC		178.0000	3.0000	NCI/G		3/23/88	R
				1				
88.73903	JRB	C	%SOLIDS	09999	50S	3/21/88		W579
TDF	GRAV		23.2000	0.4000	NONE		3/23/88	R
				1				
88.73903	JRB	C	AM-241	09999	50S	3/21/88		W579
TDF	GELI		48.0000	7.0000	NCI/G		3/23/88	R
				1				
88.73903	JRB	C	CO-57	09999	50S	3/21/88		W579
TDF	GELI		3.3000	1.2000	NCI/G		3/23/88	R
				1				
88.73903	JRB	C	CO-60	09999	50S	3/21/88		W579
TDF	GELI		7.5000	1.1000	NCI/G		3/23/88	R
				1				
88.73903	JRB	C	CO-58	09999	50S	3/21/88		W579
TDF	GELI		2.7000	1.1000	NCI/G		3/23/88	R
				1				
88.73903	JRB	C	MN-54	09999	50S	3/21/88		W579
TDF	GELI		3.4000	1.1000	NCI/G		3/23/88	R
				1				
88.73903	JRB	C	SR-85	09999	50S	3/21/88		W579
TDF	GELI		8.4000	1.4000	NCI/G		3/23/88	R
				1				
88.73903	JRB	C	SE-75	09999	50S	3/21/88		W579
TDF	GELI		62.0000	9.0000	NCI/G		3/23/88	R
				1				
88.73903	JRB	C	SN-113	09999	50S	3/21/88		W579
TDF	GELI		34.0000	5.0000	NCI/G		3/23/88	R
				1				
88.73903	JRB	C	NB-95	09999	50S	3/21/88		W579
TDF	GELI		4.4000	1.1000	NCI/G		3/23/88	R
				1				
88.73903	JRB	C	Y-88	09999	50S	3/21/88		W579
TDF	GELI		28.0000	3.0000	NCI/G		3/23/88	R
				1				
88.73903	JRB	C	ZN-65	09999	50S	3/21/88		W579
TDF	GELI		6.2000	2.8000	NCI/G		3/23/88	R
				1				
88.73903	JRB	C	U-235	09999	50S	3/21/88		W579
TDF	RAS	R	156.0000	70.0000	PCI/G		3/25/88	R
				1				
88.73903	JRB	C	U-235	09999	50S	3/21/88		W579
TDF	RAS	R	102.0000	56.0000	PCI/G		3/25/88	R
				1				
88.73903	JRB	C	U-234	09999	50S	3/21/88		W579
TDF	RAS	R	740.0000	170.0000	PCI/G		3/25/88	R
				1				
88.73903	JRB	C	U-234	09999	50S	3/21/88		W579
TDF	RAS	R	890.0000	190.0000	PCI/G		3/25/88	R
				1				
88.73903	JRB	C	PU-238	09999	50S	3/21/88		W579
TDF	RAS	R	22.0000	3.0000	NCI/G		3/25/88	R
				1				
88.73903	JRB	C	PU-238	09999	50S	3/21/88		W579
TDF	RAS	R	23.0000	3.0000	NCI/G		3/25/88	R

					1				
88.73903	JRB	WE	BA	09999	50S		3/21/88		W579
TMF	FAA		R	0.6800	0.0700	MG/L		7/20/88	R
					1				

SAMPLE NUM	OWNER	MATRIX	ANALYSIS	REQUEST NUM	REQUESTOR	REQUEST DATE	DUE DATE	PROJECT NUM
88.73906	JRB	C	ALPHA	09999	50S	7/06/88		W579
JL	PC		269.0000	4.0000	NCI/G		7/07/88	R
				1				
88.73906	JRB	C	AM-241	09999	50S	7/06/88		W579
TDF	GELI		40.0000	7.0000	NCI/G		7/08/88	R
				1				
88.73906	JRB	C	CO-57	09999	50S	7/06/88		W579
TDF	GELI		1.8000	0.7000	NCI/G		7/08/88	R
				1				
88.73906	JRB	C	MN-54	09999	50S	7/06/88		W579
TDF	GELI		2.1000	1.0000	NCI/G		7/08/88	R
				1				
88.73906	JRB	C	SR-85	09999	50S	7/06/88		W579
TDF	GELI		2.4000	1.1000	NCI/G		7/08/88	R
				1				
88.73906	JRB	C	SE-75	09999	50S	7/06/88		W579
TDF	GELI		4.9000	1.3000	NCI/G		7/08/88	R
				1				
88.73906	JRB	C	%SOLIDS	09999	50S	7/06/88		W579
TDF	GRAV		30.0000	0.6000	NONE		7/08/88	R
				1				
88.73906	JRB	C	U-234	09999	50S	7/06/88		W579
TDF	RAS	R	970.0000	270.0000	PCI/G		7/13/88	R
				1				
88.73906	JRB	C	U-234	09999	50S	7/06/88		W579
TDF	RAS	R	1.2000	0.2000	NCI/G		7/13/88	R
				1				
88.73906	JRB	C	U-235	09999	50S	7/06/88		W579
TDF	RAS	<	60.0000	0.0000	PCI/G		7/13/88	R
				1				
88.73906	JRB	C	U-235	09999	50S	7/06/88		W579
TDF	RAS	R	100.0000	70.0000	PCI/G		7/13/88	R
				1				
88.73906	JRB	C	PU-239	09999	50S	7/06/88		W579
TDF	RAS	R	103.0000	12.0000	NCI/G		7/13/88	R
				1				
88.73906	JRB	C	PU-239	09999	50S	7/06/88		W579
TDF	RAS	R	100.0000	11.0000	NCI/G		7/13/88	R
				1				
88.73906	JRB	C	PU-238	09999	50S	7/06/88		W579
TDF	RAS	R	60.0000	7.0000	NCI/G		7/13/88	R
				1				
88.73906	JRB	C	PU-238	09999	50S	7/06/88		W579
TDF	RAS	R	62.0000	7.0000	NCI/G		7/13/88	R
				1				
88.73906	JRB	WE	AG	09999	50S	7/06/88		W579
MCW	FAA		0.0380	0.0040	MG/L		9/08/88	R
				1				
88.73906	JRB	WE	AG	09999	50S	7/06/88		W579
MCW	FAA		0.0340	0.0040	MG/L		9/08/88	R
				1				
88.73906	JRB	WE	AS	09999	50S	7/06/88		W579
TMF	ETVAA		2.2000	0.4000	UG/L		9/08/88	R
				1				
88.73906	JRB	WE	AS	09999	50S	7/06/88		W579
TMF	ETVAA		2.2000	0.4000	UG/L		9/08/88	R

						1					
88.73906	JRB	WE	BA		09999	50S			7/06/88		W579
MCW	FAA				0.9800	0.1000	MG/L			9/08/88	R
						1					
88.73906	JRB	WE	CD		09999	50S			7/06/88		W579
MCW	FAA				25.0000	3.0000	UG/L			9/08/88	R
						1					
88.73906	JRB	WE	CD		09999	50S			7/06/88		W579
MCW	FAA				27.0000	3.0000	UG/L			9/08/88	R
						1					
88.73906	JRB	WE	CR		09999	50S			7/06/88		W579
MCW	FAA			<	0.0500	0.0000	MG/L			9/08/88	R
						1					
88.73906	JRB	WE	HG		09999	50S			7/06/88		W579
MCW	CVAA			R	36.0000	7.0000	UG/L			9/08/88	R
						1					
88.73906	JRB	WE	HG		09999	50S			7/06/88		W579
MCW	CVAA			R	27.0000	6.0000	UG/L			9/08/88	R
						1					
88.73906	JRB	WE	NI		09999	50S			7/06/88		W579
MCW	FAA				0.9000	0.1000	MG/L			9/08/88	R
						1					
88.73906	JRB	WE	NI		09999	50S			7/06/88		W579
MCW	FAA				1.0000	0.1000	MG/L			9/08/88	R
						1					
88.73906	JRB	WE	PB		09999	50S			7/06/88		W579
MCW	FAA			<	0.1000	0.0000	MG/L			9/08/88	R
						1					
88.73906	JRB	WE	PB		09999	50S			7/06/88		W579
MCW	FAA			<	0.1000	0.0000	MG/L			9/08/88	R
						1					
88.73906	JRB	WE	SE		09999	50S			7/06/88		W579
TMF	ETVAA				4.6000	0.9000	UG/L			9/08/88	R
						1					
88.73906	JRB	WE	TL		09999	50S			7/06/88		W579
TMF	ETVAA				2.8000	2.0000	UG/L			9/09/88	R
						1					
88.73906	JRB	WE	TL		09999	50S			7/06/88		W579
TMF	ETVAA				1.9000	2.0000	UG/L			9/09/88	R
						1					
88.73906	JRB	WE	CD		09999	50S			7/06/88		W579
MCW	ETVAA				27.0000	5.0000	UG/L			11/01/88	R
						1					
88.73906	JRB	WE	PB		09999	50S			7/06/88		W579
MCW	ETVAA				103.0000	20.0000	UG/L			11/01/88	R
						1					
88.73906	JRB	WE	PB		09999	50S			7/06/88		W579
MCW	ETVAA				88.0000	18.0000	UG/L			11/01/88	R
						1					

1988, TX

SAMPLE NUM	OWNER	MATRIX	ANALYSIS	REQUEST NUM	REQUESTOR	REQUEST DATE	DUE DATE	PROJECT NUM
88.73909	JRB	C	ALPHA	09999	50S	9/09/88		W579
JL	PC			26.0000	1.0000	NCI/G	9/12/88	R
					1			
88.73909	JRB	C	AM-241	09999	50S	9/09/88		W579
TDF	GELI			6.4000	1.3000	NCI/G	9/13/88	R
					1			
88.73909	JRB	C	CS-137	09999	50S	9/09/88		W579
TDF	GELI			1.2000	0.5000	NCI/G	9/13/88	R
					1			
88.73909	JRB	C	SR-85	09999	50S	9/09/88		W579
TDF	GELI			1.0000	0.6000	NCI/G	9/13/88	R
					1			
88.73909	JRB	C	SN-113	09999	50S	9/09/88		W579
TDF	GELI			1.4000	0.7000	NCI/G	9/13/88	R
					1			
88.73909	JRB	C	%SOLIDS	09999	50S	9/09/88		W579
TDF	GRAV			28.8000	0.6000	NONE	9/13/88	R
					1			
88.73909	JRB	C	AM-241	09999	50S	9/09/88		W579
TDF	RAS		R	5.6000	0.9000	NCI/G	9/15/88	R
					1			
88.73909	JRB	C	AM-241	09999	50S	9/09/88		W579
TDF	RAS		R	4.7000	0.6000	NCI/G	9/15/88	R
					1			
88.73909	JRB	C	PU-239	09999	50S	9/09/88		W579
TDF	RAS		R	20.0000	2.0000	NCI/G	9/15/88	R
					1			
88.73909	JRB	C	PU-239	09999	50S	9/09/88		W579
TDF	RAS		R	20.0000	2.0000	NCI/G	9/15/88	R
					1			
88.73909	JRB	C	PU-238	09999	50S	9/09/88		W579
TDF	RAS		R	6.6000	0.8000	NCI/G	9/15/88	R
					1			
88.73909	JRB	C	PU-238	09999	50S	9/09/88		W579
TDF	RAS		R	7.2000	0.8000	NCI/G	9/15/88	R
					1			
88.73909	JRB	C	U-235	09999	50S	9/09/88		W579
TDF	RAS		R	8.0000	14.0000	PCI/G	9/15/88	R
					1			
88.73909	JRB	C	U-235	09999	50S	9/09/88		W579
TDF	RAS		R	1.0000	12.0000	PCI/G	9/15/88	R
					1			
88.73909	JRB	C	U-234	09999	50S	9/09/88		W579
TDF	RAS		R	230.0000	45.0000	PCI/G	9/15/88	R
					1			
88.73909	JRB	C	U-234	09999	50S	9/09/88		W579
TDF	RAS		R	270.0000	50.0000	PCI/G	9/15/88	R
					1			
88.73909	JRB	C	TL	09999	50S	9/09/88		W579
TMF	FAA		<	2.0000	0.0000	UG/L	11/15/88	R
					1			
88.73909	JRB	WE	BA	09999	50S	9/09/88		W579
MCW	FAA		<	0.1000	0.0000	MG/L	12/14/88	R
					1			
88.73909	JRB	WE	CD	09999	50S	9/09/88		W579
MCW	FAA			8.0000	1.0000	UG/L	12/14/88	R

						1				
88.73909	JRB	WE	CD		09999	50S		9/09/88		W579
MCW	FAA				10.0000	1.0000	UG/L		12/14/88	R
						1				
88.73909	JRB	WE	HG		09999	50S		9/09/88		W579
TMF	CVAA			<	0.2000	0.0000	UG/L		12/14/88	R
						1				
88.73909	JRB	WE	NI		09999	50S		9/09/88		W579
MCW	FAA				0.1400	0.0400	MG/L		12/14/88	R
						1				
88.73909	JRB	WE	PB		09999	50S		9/09/88		W579
MCW	FAA			<	0.1000	0.0000	MG/L		12/14/88	R
						1				
88.73909	JRB	WE	SE		09999	50S		9/09/88		W579
MCW	ETVAA			<	1.0000	0.0000	UG/L		12/14/88	R
						1				
88.73909	JRB	WE	AS		09999	50S		9/09/88		W579
MCW	ETVAA			<	2.0000	0.0000	UG/L		12/14/88	R
						1				
88.73909	JRB	WE	AG		09999	50S		9/09/88		W579
MCW	FAA				0.0030	0.0030	MG/L		12/14/88	R
						1				
88.73909	JRB	WE	AG		09999	50S		9/09/88		W579
MCW	FAA				0.0030	0.0030	MG/L		12/14/88	R
						1				
88.73909	JRB	WE	BA		09999	50S		9/09/88		W579
MCW	FAA			<	0.1000	0.0000	MG/L		12/14/88	R
						1				
88.73909	JRB	WE	HG		09999	50S		9/09/88		W579
TMF	CVAA			<	0.2000	0.0000	UG/L		12/14/88	R
						1				
88.73909	JRB	WE	NI		09999	50S		9/09/88		W579
MCW	FAA				0.1400	0.0400	MG/L		12/14/88	R
						1				
88.73909	JRB	WE	PB		09999	50S		9/09/88		W579
MCW	FAA			<	0.1000	0.0000	MG/L		12/14/88	R
						1				
88.73909	JRB	WE	SE		09999	50S		9/09/88		W579
MCW	ETVAA			<	1.0000	0.0000	UG/L		12/14/88	R
						1				
88.73909	JRB	WE	AS		09999	50S		9/09/88		W579
MCW	ETVAA			<	2.0000	0.0000	UG/L		12/14/88	R
						1				

102488.TXT

```
 SAMPLE                                  REQUEST                 REQUEST    DUE     PROJECT
  NUM     OWNER MATRIX  ANALYSIS    NUM     REQUESTOR   DATE       DATE      NUM

88.73910  JRB    C     ALPHA       09999  50S          10/24/88              W579
  JL      PC                 104.0000     1.0000  NCI/G        10/26/88     R
                                            1
88.73910  JRB    C     AM-241      09999  50S          10/24/88              W579
  TDF     GELI                26.0000     4.0000  NCI/G        10/31/88     R
                                            1
88.73910  JRB    C     %SOLIDS     09999  50S          10/24/88              W579
  TDF     GRAV                34.3000     0.7000  NONE         10/31/88     R
                                            1
88.73910  JRB    C     PU-238      09999  50S          10/24/88              W579
  TDF     RAS        R        14.0000     2.0000  NCI/G        11/02/88     R
                                            1
88.73910  JRB    C     PU-238      09999  50S          10/24/88              W579
  TDF     RAS        R        14.0000     2.0000  NCI/G        11/02/88     R
                                            1
88.73910  JRB    C     PU-239      09999  50S          10/24/88              W579
  TDF     RAS        R        50.0000     5.0000  NCI/G        11/02/88     R
                                            1
88.73910  JRB    C     PU-239      09999  50S          10/24/88              W579
  TDF     RAS        R        51.0000     5.0000  NCI/G        11/02/88     R
                                            1
88.73910  JRB    C     U-235       09999  50S          10/24/88              W579
  TDF     RAS        R        50.0000    80.0000  PCI/G        11/02/88     R
                                            1
88.73910  JRB    C     U-235       09999  50S          10/24/88              W579
  TDF     RAS        R        30.0000    60.0000  PCI/G        11/02/88     R
                                            1
88.73910  JRB    C     U-234       09999  50S          10/24/88              W579
  TDF     RAS        R       800.0000   130.0000  PCI/G        11/02/88     R
                                            1
88.73910  JRB    C     U-234       09999  50S          10/24/88              W579
  TDF     RAS        R       730.0000   120.0000  PCI/G        11/02/88     R
                                            1

REPORT  SAMPLE                                  REQUEST                 REQUEST    DUE
NUMBER   NUM     OWNER MATRIX  ANALYSIS    NUM       BATCH      DATE       DATE

       88.73910  JRB    C     AG          09999  50S          10/24/88
 W579     MCW     FAA        R          0.0280     0.0030  MG/L          1/20/89
  R                     A000029  125                                   1
88.73910
       88.73910  JRB    C     AG          09999  50S          10/24/88
 W579     MCW     FAA        R          0.0290     0.0030  MG/L          1/20/89
  R                     A000029  125                                   1
88.73910
       88.73910  JRB    C     SE          09999  50S          10/24/88
 W579     TMF     ETVAA      <          1.0000     0.0000  UG/L          1/20/89
  R                     A06864   17                                    1
88.73910
       88.73910  JRB    C     SE          09999  50S          10/24/88
 W579     TMF     ETVAA      <          1.0000     0.0000  UG/L          1/20/89
  R                     A06864   17                                    1
88.73910
       88.73910  JRB    C     AS          09999  50S          10/24/88
 W579     TMF     ETVAA      <          2.0000     0.0000  UG/L          1/20/89
  R                     A06864   17                                    1
```

Los Alamos
NATIONAL LABORATORY

Hazardous & Solid Waste Group
Los Alamos National Laboratory
Los Alamos, New Mexico 87545

Date: December 21, 1995
In Reply Refer To: ESH-19:95-0646
Mail Stop: K490
Telephone: (505) 665-0677

Mr. James Nunz
Offfice of Environment and Projects
Los Alamos Area Office
U.S. Department of Energy
528 35th Street, MS A316
Los Alamos, New Mexico 87544

Dear Mr. Nunz:

SUBJECT: FINAL NMED LETTER ON TA 50 SLUDGES

The enclosed final draft letter is provided for your transmittal to the State of New Mexico Environment Department (NMED), in response to the Department of Energy's (DOE's) request. The letter presents a position to the NMED supporting reclassification of 1,228 of the 1,288 drums of TA 50-1 sludge from low-level radioactive mixed wastes (LLMW), now being managed pursuant to the Resource Conservation and Recovery Act (RCRA), to non-RCRA low-level waste. This necessitates a request to NMED for removal of the sludges from the waste inventories in the Site Treatment Plan (STP) pursuant to the Federal Facilities Compliance Act.

The enclosed letter was developed with the assistance and support of a number of key LANL individuals listed below, and I wish to acknowledge them for their generous assistance with this effort. We concur with the position that the sludges can be viewed as a single waste stream and have so discussed them herein. Please review carefully the attachments to the letter. Be advised that NMED may request additional information, or copies of references cited in Table 1.

We request that LAAO finalize the enclosed letter for transmittal to NMED as rapidly as possible, and we would be happy to discuss any comments and concerns with you. Please contact Paul Schumann at (505) 667-5840 if you have any questions regarding these documents.

Sincerely,

James L. White, Group Leader
Hazardous and Solid Waste Group

PS/JW:ds

DRAFT
VIA CERTIFIED MAIL
RETURN RECEIPT REQUESTED

Mr. Benito Garcia, Bureau Chief
Hazardous and Radioactive Materials Bureau
New Mexico Environment Department
P.O. Box 26110
Santa Fe, New Mexico 87502

Dear Mr. Garcia:

SUBJECT: RE-CHARACTERIZATION OF WASTEWATER TREATMENT SLUDGE IN STORAGE AT TA 54 - REQUEST FOR REMOVAL FROM SITE TREATMENT PLAN (STP)

The purpose of this letter is to present the Department of Energy's (DOE's) and Los Alamos National Laboratory's (LANL's) position on the re-characterization and proper handling of 1,228 out of a total of 1,288 drums of low-level radioactive sludge currently being stored at LANL as low-level mixed waste (LLMW). They were generated by the treatment of wastewaters at LANL's Technical Area (TA) 50, building 1.

These sludges currently are included in the STP under Section 3.3 in the Compliance Plan Volume (CPV, Exhibit A) and the Background Volume in the treatability group *"dewatered treatment sludge."* DOE and LANL believe that the referenced 1,228 drums of sludge are actually radioactive nonhazardous waste, and henceforth should be managed as such. We believe these 1,228 drums need no longer be considered "covered waste" in the STP, although the remaining 60 drums continue to be managed as "covered wastes" in the STP.

Section V.B, "Covered Matters," of the October 4, 1995, Federal Facility Compliance Order (FFCO), issued by the New Mexico Environment Department (NMED) to implement the Site Treatment Plan at LANL, requires that the DOE and/or the University of California notify NMED by letter when they determine that a "covered waste," as defined in Section V.A of the FFCO, is actually radioactive waste without a hazardous waste component.

A detailed study and reevaluation of the extensive information and analytical data collected regarding the referenced sludges was recently completed. This reevaluation supports our conclusion. It supplemented and supported the many previous internal studies and reviews documenting LANL's knowledge of the processes which generate the TA 50-1 influent and the sludges, as discussed in the following sections of this letter. The data, studies, and reviews supporting our conclusion are summarized briefly in Table 1.

As specified in Section V.B of the FFCO, the following portions of this letter contain information required under Section IX.C, *"Deletion of Waste,"* of the FFCO, specifically, *"...a description of the applicable waste code, waste form and volumes; if applicable, characterization methodology used along with supporting information; and other relevant information regarding deleted waste..."*

1.0 Waste Description (applicable waste code, waste form, and volumes)

These wastes currently are included in the STP under Section 3.3 in the Compliance Plan Volume (CPV, Exhibit A) and the Background Volume as the treatability group "dewatered treatment sludge," MWIR waste ID LA-W928. This group consists of 1,288 55-gallon drums of sludge generated by the treatment of wastewaters at TA 50-1. The total volume of this material, as given in Section 3.3 of the STP, is 268.17 cubic meters. This constitutes approximately 44% of the total legacy LLMW inventory currently listed in LANL's STP. In this letter, we are requesting the removal of 1,228 of the 1,288 drums from the STP "covered waste" category.

Attachment A to this letter provides a listing of all 1,288 drums included in the STP, as currently contained in LANL's chemical and mixed waste database. The sixty (60) drums <u>not</u> proposed for removal from the STP are clearly identified. Over time, the description of the waste stream in the LANL database has varied, even though the waste itself did not change significantly, as will be documented below. Detailed records to support each container's entries in the database are contained in LANL's files. These sludge drums were generated at TA 50-1 at a rate of some 240-300 drums per year, were placed into LLMW storage at TA 54, Area G, Dome 49 beginning in 1988 and ending in 1993, and were managed in accordance with the Resource Conservation and Recovery Act (RCRA) and the New Mexico Hazardous Waste Management Regulations.

1.1 Background

In 1962, the TA 50-1 Radioactive Liquid Waste Treatment Plant (RLWTP) was constructed to treat radioactively-contaminated wastewater from nuclear research activities and other operations conducted at LANL. The RLWTP employs a conventional process that uses lime and ferric sulfate to chemically precipitate metals dissolved in LANL wastewaters. The resulting liquid effluent has been significantly reduced in total dissolved solids, including both radioactive and nonradioactive metals, compared to the influent entering the headworks of the RLWTP. The effluent is discharged to Mortandad Canyon in compliance with LANL's National Pollutant Discharge Elimination System (NPDES) permit.

A byproduct of the wastewater treatment process is the generation of dewatered vacuum filter sludges, which consist of concentrated radioactive and nonradioactive metals in a lime/ferric sulfate matrix. The RLWTP sludges are accumulated during 2 to 6 week intervals, and are placed into Department of Transportation-approved, polyethylene-lined 55-gallon drums and capped with several inches of Portland cement to absorb any liquids that might dewater from the sludge.

From 1963 to 1971, LANL disposed of the sludges generated in this wastewater treatment process at TA 54, Area "G" as a radioactive waste, which at the time predated, and thus was not regulated under RCRA. In 1971, as directed by the Atomic Energy Commission, LANL began placing drummed sludges in retrievable storage in earth-covered, above-ground storage units (primarily Pads 1, 2, and 4) at TA 54, Area G.

From 1971 to 1982, all sludge from TA 50-1 was classified as transuranic (TRU) waste. During 1983, LANL constructed a pre-treatment unit at TA 50, Building 1, Room 60 to remove transuranium, alpha-emitting radioisotopes from TRU-concentrated wastewater before it entered the main TA 50-1 treatment plant. The pretreatment process reduced the rate of TRU waste generation from TA 50-1 by a factor of 10. In 1983, the pre-treatment unit at TA 50-1 began generating small quantities of pre-treatment sludge to be managed as TRU waste. The main plant process at TA 50-1 continued to generate quantities of treatment sludge, which then could be managed as low-level radioactive waste (LLW) (except for occasional batches of TRU waste sludges generated until about February, 1989). LANL disposed of LLW treatment sludge at TA 54, Area G from 1982 through mid-1986.

As a result of the July 3, 1986, Federal Register (FR) announcement of EPA's decision to regulate the hazardous waste component of hazardous waste containing source, by-product, or special nuclear material (i.e., mixed waste), LANL began managing its TA 50-1 LLW sludge as LLMW. This decision was based on a conservative application of regulatory concerns by LANL, given its awareness of the analytical laboratories and manufacturing-type operations at LANL. These processes are associated with over 1,500 drain points within approximately 25 buildings which discharge liquids to the RLWTP. A number of internal studies and reviews documented LANL's knowledge of the processes which generate the RLWTP influent. They are referenced in Table 1.

2.0 Potential Basis for Hazardous Waste Classification

Sludge is defined in the New Mexico Hazardous Waste Management Regulations (HWMR) at 20 NMAC 4.1.101, which incorporates 40 CFR 260.10 of RCRA, as "*any solid, semi-solid, or liquid waste generated from a municipal, commercial, or industrial wastewater treatment plant ...exclusive of the treated effluent from a wastewater treatment plant.*" The sludges in question are generated from the treatment of LANL wastewaters influent to the TA 50-1 headworks. As stated in 20 NMAC 4.1.201 at 40 CFR 261.4(a)(2), such sludges are not excluded from the definition of solid waste; nor are such sludges excluded under 20 NMAC 4.1.201 at 40 CFR 261.4(b), although certain wastewater treatment sludges from a few specific sources or industries (not applicable to LANL) are excluded (see, for example, 20 NMAC 4.1.201 at 40 CFR 261.4(b)(6)(ii)). Therefore the sludges meet the definition of solid waste.

Although under 20 NMAC 4.1.201 at 40 CFR 261.4(a)(2), industrial wastewater discharges subject to regulation under the Clean Water Act are excluded from the New Mexico Hazardous Waste Act (NMHWA) and RCRA, neither the wastewaters themselves while being collected, stored or treated, nor the sludges generated from industrial wastewater treatment, are excluded by this particular provision. In order for the sludges to meet the definition of hazardous waste, however, they would have to meet one of the following criteria: (1) be listed under one of the specific waste listings in 20 NMAC 4.1.201 at 40 CFR 261 Subpart D (20 NMAC 4.1.201 at 40 CFR 261.3(b)(1)); (2) be a mixture of a solid waste and one or more listed hazardous wastes (20 NMAC 4.1.201 at 40 CFR 261.3(b)(2)); (3) be generated from (i.e., "derived from") the treatment of a listed hazardous waste (20 NMAC 4.1.201 at 40 CFR 261.3(c)(2)(i)); or (4) exhibit one of the hazardous waste characteristics (20 NMAC 4.1.201 at 40 CFR 261.3(b)(3)). Furthermore, one would have to determine that none of the exclusions in 20 NMAC 4.1.201 at 40 CFR 261.3(a)(2) or 40 CFR 261.4(b) applied to the waste stream.

Since it was known that trace quantities of organic solvents may have entered the TA 50-1 influent over time, LANL conservatively began managing its TA 50-1 LLW sludge as LLMW. This was done despite the fact that analytical results indicated that only trace levels (below regulatory limits) or undetectable levels of solvents that may or may not meet the Subpart D listings may have entered the influent during the entire time period covering generation of the referenced sludges, as will be discussed below. At this time, 1,288 drums of this material are stored in TA 54 as LLMW.

3.0 Characterization Methodology

RLWTP influent and effluent have been regularly sampled at several locations in the treatment process throughout its operating history. Autosamplers are used to obtain composite samples of influent daily while the plant is operating, and weekly and monthly grab samples of both influent and effluent wastewaters are collected to satisfy internal and NPDES permit requirements. Over time, the frequency of analysis and the types and numbers of parameters monitored have steadily increased.

LANL has examined data from volatile organic and toxic metals analyses of TA 50-1 influent sampled during the period of generation of the 1,288 drums of sludge (from June, 1988 to November, 1993). Data collected since 1988 on toxic organic constituents in RLWTP influent, summarized in Tables B-1 and B-2 of Attachment B, show that over time, approximately fourteen different organic solvents have been detected at trace levels. The plant operator could not know in all instances the specific source of the solvents in RLWTP influent or metals in sludges.

Recently, LANL conducted a thorough reevaluation of the available data, together with a review of the numerous earlier studies by LANL and its subcontractors regarding various aspects of RLWTP operations and/or the sludges in particular. All of this information now suggests that 1,228 of the 1,288 drums of sludge meet the terms of an exclusion from regulation as hazardous (mixed) waste.

Supporting information reviewed is summarized in Table 1. The attachments to this letter provide examples of the extensive information base assembled and examined as part of LANL's recent re-assessment.

4.0 Basis for Re-Characterization as Nonhazardous Waste

Under 20 NMAC 4.1.201 at 40 CFR 261.4(a)(2), industrial wastewater discharges subject to regulation under the Clean Water Act are excluded from the New Mexico Hazardous Waste Act (NMHWA) and RCRA. However, neither the wastewaters themselves while being collected, stored or treated, nor the sludges generated from industrial wastewater treatment, are excluded by this particular provision. Nonetheless, LANL's available data, and previous LANL studies addressing these issues, support the conclusion that most of the TA 50-1 treatment sludges should not be classified as LLMW at this time. DOE and LANL believe that at this time 1,228 of the 1,288 drums of sludge meet the terms of an exclusion from regulation as hazardous (mixed) waste. To reach this determination, LANL reviewed each of the four criteria discussed in Section 2.0 of this letter in turn.

4.1 Listed Waste

Although a number of the waste listings in 20 NMAC 4.1.201 at 40 CFR 261 Subpart D pertain specifically to wastewater treatment sludges, the studies (summarized in Table 1) conducted to characterize the waste streams influent to the RLWTP did not support their applicability to the TA 50-1 sludges, with the possible exception of the potential F006 listing. LANL conducted an extensive regulatory review to address the possibility that these drums may contain F006 waste, because of an on-site electroplating operation whose discharges had, mixed with other liquids, at times entered the headworks of the RLWTP during the period in question. This potential applicability of F006 had been identified by NMED, during the 1993 Multimedia Inspection, for 308 drums of this sludge waste stream. These 308 drums were generated by the same process at TA 50-1, from the same influent wastewaters that yielded the 1,288 drums discussed herein. The subsequent Administrative Order, NMHWA 94-09, questioned whether the 308 drums were adequately characterized for metals and whether the F006 waste code was potentially applicable.

The final resolution reached by NMED and LANL on the 308 drums recognized, based on LANL submittals, that the sludges had been characterized adequately for metals, none of which exceeded Toxicity Characteristic Leaching Procedure (TCLP) levels; and that the F006 code was not applicable to the sludge. LANL submits that the same resolution is applicable here, based on the fact that all of the sludge contained in the 1,288 drums and the 308 drums originated from the same processes and source. LANL has verified through internal investigations that no change in treatment plant operations, process excursion, or characterization of the treatment plant influent is associated with the sludges in either group of drums.

4.2 Mixture Rule

The second criterion described in Section 2.0 above is whether the TA 50-1 sludges could be hazardous by virtue of being a mixture of a solid waste and one or more listed hazardous wastes (20 NMAC 4.1.201 at 40 CFR 261.3(b)(2)). However, while this criterion potentially could apply to the 1,288 drums of sludge, it does not apply to most of them, owing to an exemption. EPA has recognized that at some facilities, small quantities of spent solvents listed in 40 CFR 261.31, discarded commercial chemical products, manufacturing chemical intermediates listed in 40 CFR 261.33, and discarded laboratory wastes are discharged into relatively larger volumes of process wastewaters in amounts not warranting application of the mixture rule, because the amounts of listed hazardous wastes found in such a mixture are often too minute to pose a significant threat to human health and the environment (46 FR 56582-56588, November 17, 1981). Therefore, a number of exemptions to the mixture rule have been established, as codified in 20 NMAC 4.1.201 at 40 CFR 261.3(a)(2)(iv).

DOE and LANL believe 1,228 of the 1,288 drums meet the two bases for an exemption provided in 20 NMAC 4.1.201 at 40 CFR 261.3(a)(2)(iv)(A) and (B), respectively. First, it must be noted that the TA 50-1 influent wastewaters themselves do not meet the waste listings given in 20 NMAC 4.1.201 at 40 CFR 261 Subpart D, so they are not listed hazardous wastes. To qualify for the exemption, it must be shown that the wastewaters are not hazardous waste mixtures and therefore the sludges generated from their treatment cannot be hazardous waste mixtures.

The regulation allows the facility to demonstrate that the combined concentrations of spent solvent in the wastewater mixture do not exceed 1 or 25 parts per million (ppm), respectively, depending on the type of solvent. The exemption in 20 NMAC 4.1.201 at 40 CFR 261.3(a)(2)(iv)(A) applies to wastewater mixtures containing *"...[O]ne or more of the following solvents listed in § 261.31 - carbon tetrachloride, tetrachloroethylene, trichloroethylene - Provided, That the maximum total weekly usage of these solvents...divided by the average weekly flow of wastewater into the headworks of the facility's waste water treatment or pretreatment system, does not exceed 1 part per million..."* The exemption in 20 NMAC 4.1.201 at 40 CFR 261.3(a)(2)(iv)(B) applies to wastewater mixtures containing *"...[O]ne or more of the following spent solvents listed in § 261.31 - methylene chloride, 1,1,1-trichloroethane, chlorobenzene, o-dichlorobenzene, cresols, cresylic acid, nitrobenzene, toluene, methyl ethyl ketone, carbon disulfide, isobutanol, pyridine, spent chlorofluorocarbon solvents - provided that the maximum total weekly usage of these solvents...divided by the average weekly flow of wastewater into the headworks of the facility's waste water treatment or pretreatment system does not exceed 25 parts per million..."*

This exclusion demonstration could be made by performing a materials balance for solvent use at the facility, subtracting solvent use that can be shown not to be discharged into wastewater, and dividing the difference by the weekly volume at the headworks. Note that in 46 FR 56585, EPA clarified that this method was allowed because the more difficult technique of actually measuring the concentrations of these solvents at the headworks would

be too onerous a burden for most waste generators. However, direct sampling of the headworks influent is not prohibited by the regulation and is more accurate. Composite samples of RLWTP influent are now drawn daily while the plant is operating, and weekly and monthly grab samples of effluent wastewaters are collected in accordance with internal and NPDES permit requirements.

LANL undertook a detailed re-examination of TA 50-1 influent data from volatile organic analyses for the period of generation of the 1,288 drums of sludge (from June, 1988 to November, 1993). Data collected since 1988 on toxic organic constituents in RLWTP influent is summarized in Tables B-1 and B-2.

Table B-1 summarizes influent data in Tables B-4 through B-17, collected from December, 1988 through May, 1992. For each of the fourteen organic compounds that were detected in one or more samples during this period, individual sample values, and mean, minimum, and maximum values for each sample population are given in Tables B-4 through B-17. Values are reported in micrograms per liter.

Table B-2 shows the mean, minimum, and maximum values detected in the population of influent samples obtained from May, 1992 through May, 1994. Analytical results for this latter period are reported by individual sample in Table B-3 for the highest detectable concentration of each toxic organic compound detected during each sampling event. Values are reported in milligrams per liter.

These two data sets, as reported in several individual LANL studies, cover the period during which the 1,288 sludge drums were generated, and characterize the toxic organic constituent composition of the influent wastewaters whose treatment resulted in generation of the sludges. For the majority of sample events, volatile organic compounds were not detected at all. In some samples, one or more of the fourteen compounds was detected as shown in Table B-1, but at extremely low levels such that their combined concentrations in each given sampling period generally did not exceed regulatory exclusion levels of 1 ppm and/or 25 ppm as provided in 20 NMAC 4.1.201 at 40 CFR 261.3(a)(2)(iv)(A) and (B), respectively. For example, combined concentrations of 1,2-dichloroethane, methylene chloride, nitrobenzene, and toluene were found to be below regulatory exclusion levels in all samples, as reported in the Attachment B tables. In all instances, the combined mean values of compounds specified in 20 NMAC 4.1.201 at 40 CFR 261.3(a)(2)(iv)(A) and (B), averaged over the period of generation of the 1,288 drums, did not exceed the regulatory exclusion levels of 1 ppm and/or 25 ppm.

As discussed in Section 1.1 of this letter, RLWTP sludges are generated in discrete batches. Influent sample events can be tied to specific batches of sludge in most cases. As indicated in Tables B-4 through B-17, the combined maximum concentrations of some of the 20 NMAC 4.1.201, 40 CFR 261.3(a)(2)(iv)(B) compounds exceeded the regulatory exclusion level of 25 ppm in the samples collected on December 15, 19, and 22, 1988. Also, two compounds not

listed in the 20 NMAC 4.1.201, 40 CFR 261.3(a)(2)(iv)(A) or (B) exclusions, namely benzene and 1,1,2-trichloroethane, were detected at extremely low (less than 0.1 ppm) levels in these same samples. The December 15, 19, and 22, 1988 influent analyses correspond to one specific batch of 60 drums of resultant sludge. Because of this discrepancy (albeit a small one) between the influent sampling results for the 60 drums and the terms of the exclusions, LANL is not seeking to apply the exclusions to this batch of 60 sludge drums at this time.

Finally, acetone was detected in a number of samples, as summarized in Table B-2 and reported for individual samples in column A in Table B-3. However, acetone should not be a constituent of concern for application of the 20 NMAC 4.1.201 at 40 CFR 261.3(a)(2)(iv)(A) and (B) mixture rule exclusions. It did not cause TA 50-1 influent or sludge to exhibit the characteristic of ignitability (the basis for the F003 listing). Moreover its presence does not impact the exclusion of the 1,228 sludge drums from NMAC 4.1.201 at 40 CFR 261.3(a)(2)(iii). Therefore the presence of acetone in some influent samples does not cause the sludge to be a characteristic waste or a mixture of a solid waste and a characteristic wastewater.

4.3 "Derived From" Rule

The third criterion described in Section 2.0 above is whether the TA 50-1 sludges could be listed hazardous waste by being derived from the treatment of a listed hazardous waste (20 NMAC 4.1.201 at 40 CFR 261.3(c)(2)(i)). However, while this criterion potentially could apply to the sludge, it does not apply to 1,228 of the 1,288 drums, owing to application of the exemption in 20 NMAC 4.1.201 at 40 CFR 261.3(a)(2)(iv)(A) and (B), as discussed in Section 4.2 of this letter.

While the influent wastewaters are solid wastes, DOE and LANL demonstrated in Section 4.2 of this letter that they are not listed hazardous wastes, and that based on the exclusion, 1,228 of the 1,288 drums of treatment sludges are not mixtures of listed hazardous wastes. DOE and LANL believe that all but the 60 drums discussed above meet the exclusion and therefore were not derived from treatment of a hazardous waste mixture Hence, 1,228 of the 1,288 drums of treatment sludges cannot be listed wastes based on the "derived from" rule.

4.4 Characteristic Waste

The fourth criterion described in Section 2.0 above is whether the TA 50-1 sludges could exhibit one of the hazardous waste characteristics (20 NMAC 4.1.201 at 40 CFR 261.3(b)(3)). Analytical results of the Extraction Procedure Toxicity Characteristic test are reported by individual sample in Tables C-1 through C-8 by analyte. Table C-9 shows the mean, minimum, and maximum values detected in the population of samples in Table C-10. Table C-10 reports, by individual sample, the highest detectable concentration of constituents found in each sampling event during the period in question. The Toxicity Characteristic Leaching Procedure was the applicable test method during most of the time period covered by Tables C-9 and C-10. No constituents tested were found to exceed regulatory levels.

Analysis of influent wastewaters during this period showed that no toxicity characteristic metals were found to exceed regulatory concentrations in TA 50-1 influent. The concentrations remained significantly below the regulatory concentrations for each constituent.

As mentioned in Section 4.2, while acetone was detected in a number of samples, it did not cause TA 50-1 influent or sludge to exhibit the ignitability characteristic. Therefore its presence in the influent does not cause the sludge to be a characteristic waste or a mixture of a solid waste and a characteristic wastewater.

5.0 Controls Preventing Influent Contamination

LANL had developed and implemented administrative controls in the early 1980s - well before the generation of the sludges in question - to prohibit uncontrolled disposal of substances that may contain RCRA hazardous wastes into drain systems flowing into the RLWTP. These included written instructions such as LANL-wide Administrative Requirements (ARs), as shown in Attachment D, as well as group-specific Standard Operating Procedures (SOPs) instituted by most of the user groups generating RLWTP influent. Additionally, signs were placed at all sinks, drains, and other "point source" locations leading into the wastewater system prohibiting unapproved disposal of chemicals down sinks or drains. Mandatory training programs for all LANL employees, consultants and contractors covering the ARs and advising them on the proper handling of chemical wastes throughout the Laboratory have also been in place for a number of years. Many of these were documented in the studies listed in Table 1.

6.0 Conclusion and Recommendations

LANL's extensive reviews of available data, and of previous studies addressing these issues, support the conclusion that 1,228 of the 1,288 drums of TA 50 treatment sludge should no longer be classified as LLMW. Trace levels of constituents found occasionally in influent and sludge samples may have been due to laboratory contamination, which could not be comprehensively documented, or to the inevitable occasional discharges meeting the definition of *de minimus* losses in 20 NMAC 4.1.201 at 40 CFR 261.3(a)(2)(iv)(D) and elsewhere.

It is our understanding that upon approval of this request by NMED, the referenced 1,228 drums of sludge shall no longer be subject to the terms of the HWMR or the FFCO. LANL will then consider the referenced 1,228 55 gallon containers in the treatability group "*dewatered treatment sludge*," MWIR waste ID LA-W928, deleted from the STP and from LANL's LLMW inventory. The remaining 60 drums will continue to be managed in this treatability group in accordance with the requirements of the STP under Section 3.3 in the Compliance Plan Volume (CPV, FFCO Exhibit A).

Upon approval of this request by NMED, LANL wishes to proceed as expeditiously as possible with the re-labeling and on-site disposal of the referenced 1,228 55 gallon containers as low-level radioactive waste. The remaining 60 drums will continue to be managed in accordance with the requirements of the HWMR.

LANL's records and documents described in this letter are available to NMED's staff upon request. We would be happy to discuss the information contained in this letter with you at your earliest possible opportunity. Please contact me at (505) 665-5042 or Paul Schumann at (505)667-5840.

Sincerely,

H.L. "Jody" Plum
Office of Environment and Projects

Attachments: a/s

Cy:

J. Mack, AMEP, LAAO, MS A316
H. Haynes, Counsel, LAAO, MS A316
J. Nunz, AMEP, LAAO, MS A316
M. Williams, WMD, AL, MS A316
D. Erickson, ESH-DO, MS A105
A. Gancarz, CST-DO, MS J515
M. Devaurs, ER/WM, MS J552
J. Rochelle, LC-GEN, MS A187
J. White, ESH-19, MS K490
P. Schumann, ESH-19, MS K490

TABLE 1

NAME OF DOCUMENT	CONTENT OF DOCUMENT
Administrative Requirements (ARs)	In 1984, LANL adopted AR 10-1 through AR 10-5 for the purposes of controlling the management and disposal of radioactive liquid waste (AR 10-1), low-level radioactive solid waste (AR 10-2), non-radioactive chemical waste (AR 10-3), polychorinated biphenyls (PCBs) (AR 10-4), and transuranic (TRU) solid waste (AR 10-5). These documents establish procedures to be followed by all LANL personnel when managing the various types of wastes. For example, AR 10-3 establishes administrative controls for chemical waste disposal. AR 10-3 prohibits disposal of chemical waste down sanitary sewer drains and floor drains without approval.
Flows Report and Analyses for Composite Mineral Sample.	For the years 1985 to the present, the RLWTP at TA 50-1 has on file the amount of liquid waste that flows through and is handled by the facility. Analytical results from the influent, effluent and treated sludge waste streams are listed. Chemical concentrations are below regulatory limits except as discussed in this letter. These reports are also required by the NPDES Permit.
Consolidated Permit Application (NPDES Permit)	In 1986, LANL submitted its NPDES Permit Application to the Environmental Improvement Agency (EPA). As a part of this application, all Point Source Discharges, including Outfall 051 from the TA 50-1 RLWTP, had to be identified, sampled and analyzed. Analytical results showed that the chemical composition of the discharges from these outfalls were below regulatory limits of the Clean Water Act.
NPDES Permit (Modification) Application	In 1987, LANL submitted and received approval for its NPDES Permit Modification. The modification allowed the intermittent use of both the TA 50 sanitary sewer system and Outfall 03-022 for discharging of liquid waste from the identified operations.
Sample results from the radioactive low level wastewater treatment facility's vacuum filter sludge	For a period of approximately three (3) years, beginning in 1987 and ending in 1990, each batch of vacuum filter sludge was analyzed for toxic metals prior to capping of drums with portland cement. Toxic metal concentrations did not exceed RCRA regulatory limits.
Data Base of TA 54, Dome 49 Storage Inventory	This Data Base identifies drum numbers, dates when drums went into storage, volumes, and the Technical Area of origin of the 1,288 drums. (See excerpt in Attachment A). For example, drum number 88091000 was first placed into storage on June 14, 1988, and drum number C93039013 was the last drum placed into storage, on November 4, 1993.
LANL/DOE	In November, 1989, DOE, through its contractor

Environmental Survey	EG&G Idaho, Inc., published the field and analytical data collected by Idaho National Engineering Laboratory (INEL) Sampling and Analysis (S&A) Team at the LANL Facility. This survey includes information from DOE's "Environmental Survey Preliminary Report, LANL" (DOE 1988a), the "Environmental Survey Sampling and analysis Plan, LANL" (DOE, 1988b) and references the Environmental Survey Manual (DOE, 1987). This report contained no information that would lead to the conclusion that RCRA constituents in influent or sludge were present above regulatory limits.
Summary of Solid Waste Streams	In January, 1991, through its contractor, International Technology Corporation, LANL published a report in response to the requirements of the Hazardous Waste Facility Permit Number NM08900105515-1. This document presents a listing of all solid waste streams within designated Technical Areas (TAs).
Study of Alternatives for Radioactive Wastewater Treatment Sludges at the Los Alamos National Laboratory	In October, 1991, LANL contracted with the Ralph M. Parsons Company to investigate options and recommend a final disposition of the TA 50-1 sludge drums. Results of this investigation indicated that these drums were inappropriately identified as low level mixed waste and should be considered low level radioactive waste only.
Radioactive Liquid Waste Collection System Study	Completed in October, 1993 with the final report published in August, 1994, LANL, through its contractor Merrick Engineers & Architects, conducted a Technical Area by Technical Area, building by building and room by room survey. The purpose of this survey was to ensure compliance with all relevant Federal, State, Tribal, LANL and Local requirements. Included is a description of the configuration of the present RLWTP collection system and characterization data for this system.

FIGURE 1

RADIOACTIVE COLLECTION SYSTEM

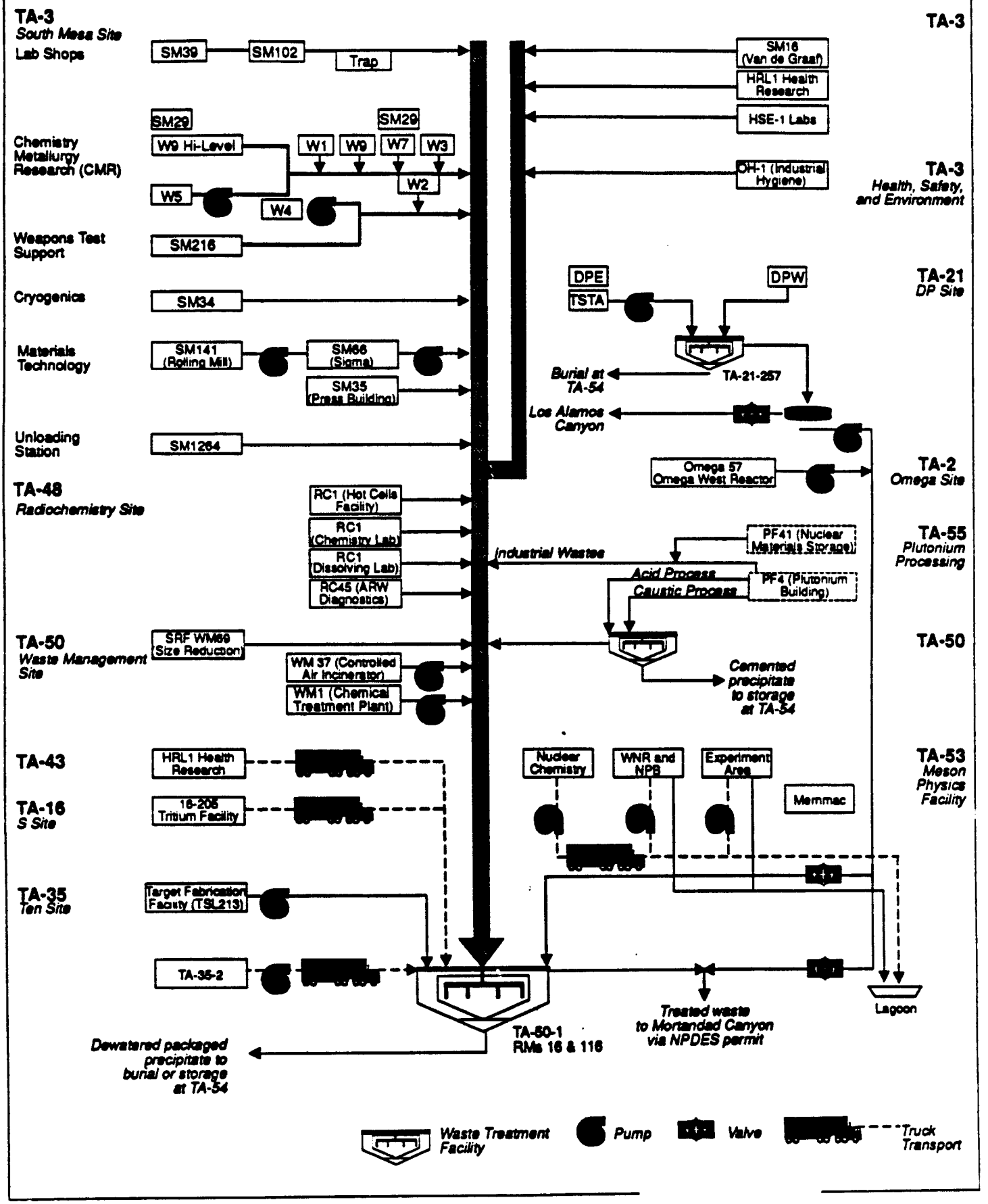

FIGURE 2

TA-50-1 PLANT
SAMPLING LOCATIONS AND WASTE STREAMS

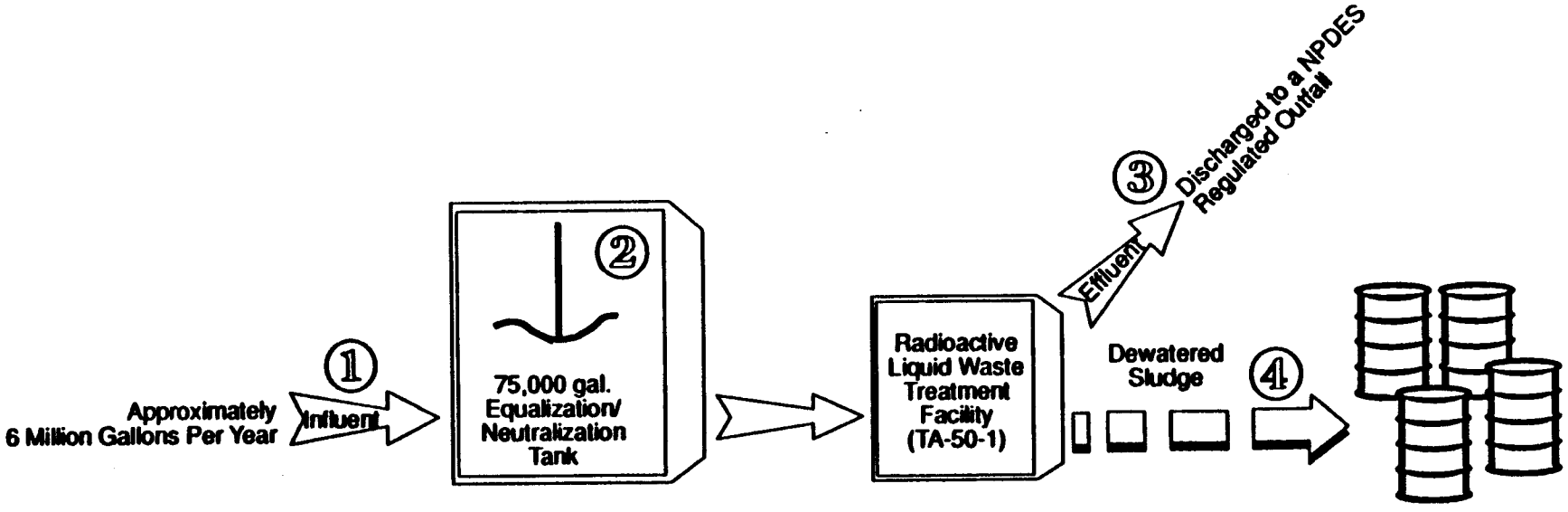

SAMPLING LOCATIONS:

1. Manning and ISCO Samplers
2. Plant
3. Effluent
4. Sludge

```
88.73910
      88.73910  JRB   C     AS          09999  50S         10/24/88
 W579     TMF     ETVAA     <          2.0000     0.0000  UG/L          1/20/89
  R                    A06864   17                                   1
88.73910
      88.73910  JRB   C     CR          09999  50S         10/24/88
 W579     TMF     ETVAA               22.0000     4.0000  UG/L          1/20/89
  R                    A000029  125                                   1
88.73910
      88.73910  JRB   C     HG          09999  50S         10/24/88
 W579     TMF     CVAA      <          0.2000     0.0000  UG/L          1/20/89
  R                    A001794  24                                    1
88.73910
      88.73910  JRB   C     HG          09999  50S         10/24/88
 W579     TMF     CVAA      <          0.2000     0.0000  UG/L          1/20/89
  R                    A001794  24                                    1
88.73910
      88.73910  JRB   C     NI          09999  50S         10/24/88
 W579     MCW     FAA       R          0.4100     0.0400  MG/L          1/20/89
  R                    A000212  32                                    1
88.73910
      88.73910  JRB   C     NI          09999  50S         10/24/88
 W579     MCW     FAA       R          0.4200     0.0400  MG/L          1/20/89
  R                    A000212  32                                    1
88.73910
      88.73910  JRB   C     BA          09999  50S         10/24/88
 W579     TMF     FAA       R          2.7000     0.3000  MG/L          1/30/89
  R                    000219   104                                   1
88.73910
      88.73910  JRB   C     BA          09999  50S         10/24/88
 W579     TMF     FAA       R          3.3000     0.3000  MG/L          1/30/89
  R                    000219   104                                   1
88.73910
      88.73910  JRB   C     CD          09999  50S         10/24/88
 W579     TMF     ETVAA               9.5000     1.0000  UG/L          1/30/89
  R                    000214   140                                   1
88.73910
      88.73910  JRB   C     PB          09999  50S         10/24/88
 W579     TMF     ETVAA               8.4000     1.0000  UG/L          1/30/89
  R                    000214   140                                   1
88.73910
      88.73910  JRB   C     TL          09999  50S         10/24/88
 W579     TMF     FAA       <          2.0000     0.0000  UG/L          1/30/89
  R                    A001794  24                                    1
88.73910
      88.73910  JRB   C     TL          09999  50S         10/24/88
 W579     TMF     FAA       <          2.0000     0.0000  UG/L          1/30/89
  R                    A001794  24                                    1
88.73910
```

111788.TXT

SAMPLE NUM	OWNER	MATRIX	ANALYSIS	REQUEST NUM	REQUESTOR	REQUEST DATE	DUE DATE	PROJECT NUM
88.73911	JRB	C	%SOLIDS	09999	50S	11/17/88		W579
TDF	GRAV		37.4000	0.8000	NONE	11/18/88		R
				1				
88.73911	JRB	C	AM-241	09999	50S	11/17/88		W579
TDF	GELI		465.0000	70.0000	NCI/G	11/18/88		R
				1				
88.73911	JRB	C	CS-137	09999	50S	11/17/88		W579
TDF	GELI		5.4000	2.7000	NCI/G	11/18/88		R
				1				
88.73911	JRB	C	SR-85	09999	50S	11/17/88		W579
TDF	GELI		10.0000	3.0000	NCI/G	11/18/88		R
				1				
88.73911	JRB	C	SE-75	09999	50S	11/17/88		W579
TDF	GELI		5.7000	2.3000	NCI/G	11/18/88		R
				1				
88.73911	JRB	C	SN-113	09999	50S	11/17/88		W579
TDF	GELI		44.0000	7.0000	NCI/G	11/18/88		R
				1				
88.73911	JRB	C	NB-95	09999	50S	11/17/88		W579
TDF	GELI		22.0000	4.0000	NCI/G	11/18/88		R
				1				
88.73911	JRB	C	AM-241	09999	50S	11/17/88		W579
TDF	NAI		515.0000	32.0000	NCI/G	11/18/88		R
				1				
88.73911	JRB	C	ALPHA	09999	50S	11/17/88		W579
TDF	PC		698.0000	5.0000	NCI/G	11/18/88		R
				1				
88.73911	JRB	C	ALPHA	09999	50S	11/17/88		W579
TDF	PC		711.0000	40.0000	NCI/G	11/18/88		R
				1				
88.73911	JRB	C	PU-239	09999	50S	11/17/88		W579
TDF	RAS	R	127.0000	113.0000	NCI/G	11/23/88		R
				1				
88.73911	JRB	C	PU-239	09999	50S	11/17/88		W579
TDF	RAS	R	113.0000	13.0000	NCI/G	11/23/88		R
				1				
88.73911	JRB	C	PU-238	09999	50S	11/17/88		W579
TDF	RAS	R	27.0000	4.0000	NCI/G	11/23/88		R
				1				
88.73911	JRB	C	PU-238	09999	50S	11/17/88		W579
TDF	RAS	R	27.0000	3.0000	NCI/G	11/23/88		R
				1				
88.73911	JRB	C	U-235	09999	50S	11/17/88		W579
TDF	RAS	R	30.0000	90.0000	PCI/G	11/23/88		R
				1				
88.73911	JRB	C	U-235	09999	50S	11/17/88		W579
TDF	RAS	R	30.0000	90.0000	PCI/G	11/23/88		R
				1				
88.73911	JRB	C	U-234	09999	50S	11/17/88		W579
TDF	RAS	R	670.0000	200.0000	PCI/G	11/23/88		R
				1				
88.73911	JRB	C	U-234	09999	50S	11/17/88		W579
TDF	RAS	R	530.0000	180.0000	PCI/G	11/23/88		R
				1				

REPORT	SAMPLE	REQUEST	REQUEST	DUE

NUMBER	NUM	OWNER	MATRIX	ANALYSIS	NUM	BATCH	DATE	DATE
	88.73911	JRB	C	AG	09999	50S	11/17/88	
W579	MCW	FAA	R		0.0410	0.0040	MG/L	1/20/89
R			A000029	125			1	
88.73911								
	88.73911	JRB	C	AG	09999	50S	11/17/88	
W579	MCW	FAA	R		0.0420	0.0040	MG/L	1/20/89
R			A000029	125			1	
88.73911								
	88.73911	JRB	C	AS	09999	50S	11/17/88	
W579	TMF	ETVAA	<		2.0000	0.0000	UG/L	1/20/89
R			A06864	17			1	
88.73911								
	88.73911	JRB	C	AS	09999	50S	11/17/88	
W579	TMF	ETVAA	<		2.0000	0.0000	UG/L	1/20/89
R			A06864	17			1	
88.73911								
	88.73911	JRB	C	SE	09999	50S	11/17/88	
W579	TMF	ETVAA	R		1.0000	1.0000	UG/L	1/20/89
R			A06864	17			1	
88.73911								
	88.73911	JRB	C	SE	09999	50S	11/17/88	
W579	TMF	ETVAA	<		1.0000	0.0000	UG/L	1/20/89
R			A06864	17			1	
88.73911								
	88.73911	JRB	C	CR	09999	50S	11/17/88	
W579	TMF	ETVAA	R		11.0000	2.0000	UG/L	1/20/89
R			A000029	125			1	
88.73911								
	88.73911	JRB	C	CR	09999	50S	11/17/88	
W579	TMF	ETVAA	R		8.0000	2.0000	UG/L	1/20/89
R			A000029	125			1	
88.73911								
	88.73911	JRB	C	HG	09999	50S	11/17/88	
W579	TMF	CVAA	R		9.0000	0.9000	UG/L	1/20/89
R			A001794	24			1	
88.73911								
	88.73911	JRB	C	HG	09999	50S	11/17/88	
W579	TMF	CVAA	R		8.6000	0.9000	UG/L	1/20/89
R			A001794	24			1	
88.73911								
	88.73911	JRB	C	NI	09999	50S	11/17/88	
W579	MCW	FAA	R		0.3500	0.0400	MG/L	1/20/89
R			A000212	32			1	
88.73911								
	88.73911	JRB	C	NI	09999	50S	11/17/88	
W579	MCW	FAA	R		0.3500	0.0400	MG/L	1/20/89
R			A000212	32			1	
88.73911								
	88.73911	JRB	C	TL	09999	50S	11/17/88	
W579	TMF	FAA	<		2.0000	0.0000	UG/L	1/30/89
R			A001794	24			1	
88.73911								
	88.73911	JRB	C	TL	09999	50S	11/17/88	
W579	TMF	FAA	<		2.0000	0.0000	UG/L	1/30/89
R			A001794	24			1	
88.73911								
	88.73911	JRB	C	PB	09999	50S	11/17/88	
W579	TMF	ETVAA	R		6.0000	1.0000	UG/L	1/30/89

```
 R                    000214   140                                1
88.73911
       88.73911  JRB   C     PB          09999  50S         11/17/88
 W579     TMF     ETVAA     R          6.0000     1.0000  UG/L          1/30/89
 R                    000214   140                                1
88.73911
       88.73911  JRB   C     CD          09999  50S         11/17/88
 W579     TMF     ETVAA     R          9.5000     1.0000  UG/L          1/30/89
 R                    000214   140                                1
88.73911
       88.73911  JRB   C     CD          09999  50S         11/17/88
 W579     TMF     ETVAA     R          9.5000     1.0000  UG/L          1/30/89
 R                    000214   140                                1
88.73911
       88.73911  JRB   C     BA          09999  50S         11/17/88
 W579     TMF     FAA       <          1.0000     0.0000  MG/L          1/30/89
 R                    000219   104                                1
88.73911
       88.73911  JRB   C     BA          09999  50S         11/17/88
 W579     TMF     FAA       <          1.0000     0.0000  MG/L          1/30/89
 R                    000219   104                                1
88.73911
```

REPORT NUMBER	SAMPLE NUM	OWNER	MATRIX	ANALYSIS	REQUEST NUM	BATCH	REQUEST DATE	DUE DATE
	89.73902	JRB	C	SOLIDS	09999	50S	2/07/89	
W579	TDF	GRAV			30.6000	0.6000	%	2/09/89
R			A001775	29			1	
89.73902								
	89.73902	JRB	C	AM-241	09999	50S	2/07/89	
W579	TDF	GELI			102.0000	15.0000	NCI/G	2/09/89
R			S12463	83			1	
89.73902								
	89.73902	JRB	C	CO-57	09999	50S	2/07/89	
W579	TDF	GELI			2.4000	0.5000	NCI/G	2/09/89
R			S12463	83			1	
89.73902								
	89.73902	JRB	C	CO-58	09999	50S	2/07/89	
W579	TDF	GELI			2.2000	0.6000	NCI/G	2/09/89
R			S12463	83			1	
89.73902								
	89.73902	JRB	C	CS-137	09999	50S	2/07/89	
W579	TDF	GELI			850.0000	540.0000	PCI/G	2/09/89
R			S12463	83			1	
89.73902								
	89.73902	JRB	C	MN-54	09999	50S	2/07/89	
W579	TDF	GELI			1.7000	0.5000	NCI/G	2/09/89
R			S12463	83			1	
89.73902								
	89.73902	JRB	C	SR-85	09999	50S	2/07/89	
W579	TDF	GELI			2.6000	0.8000	NCI/G	2/09/89
R			S12463	83			1	
89.73902								
	89.73902	JRB	C	SE-75	09999	50S	2/07/89	
W579	TDF	GELI			2.1000	0.6000	NCI/G	2/09/89
R			S12463	83			1	
89.73902								
	89.73902	JRB	C	NB-95	09999	50S	2/07/89	
W579	TDF	GELI			4.5000	0.7000	NCI/G	2/09/89
R			S12463	83			1	
89.73902								
	89.73902	JRB	C	Y-88	09999	50S	2/07/89	
W579	TDF	GELI			20.0000	3.0000	NCI/G	2/09/89
R			S12463	83			1	
89.73902								
	89.73902	JRB	C	ZN-65	09999	50S	2/07/89	
W579	TDF	GELI			3.2000	1.6000	NCI/G	2/09/89
R			S12463	83			1	
89.73902								
	89.73902	JRB	C	ZR-88	09999	50S	2/07/89	
W579	TDF	GELI			15.0000	2.0000	NCI/G	2/09/89
R			S12463	83			1	
89.73902								
	89.73902	JRB	C	ALPHA	09999	50S	2/07/89	
W579	JL	PC			191.0000	3.0000	NCI/G	2/09/89
R			A 5645	26			1	
89.73902								
	89.73902	JRB	C	PU-239	09999	50S	2/07/89	
W579	TDF	RAS	R		54.0000	6.0000	NCI/G	2/09/89
R			A6464	5			1	
89.73902								

```
        89.73902  JRB   C     PU-239      09999  50S          2/07/89
 W579     TDF     RAS       R          54.0000     6.0000  NCI/G        2/09/89
  R                     A6464    5                                   1
89.73902
        89.73902  JRB   C     PU-238      09999  50S          2/07/89
 W579     TDF     RAS       R          20.0000     3.0000  NCI/G        2/09/89
  R                     A6464    5                                   1
89.73902
        89.73902  JRB   C     PU-238      09999  50S          2/07/89
 W579     TDF     RAS       R          21.0000     3.0000  NCI/G        2/09/89
  R                     A6464    5                                   1
89.73902
        89.73902  JRB   C     U-235       09999  50S          2/07/89
 W579     TDF     RAS       <          40.0000     0.0000  PCI/G        2/14/89
  R                     A6464    6                                   1
89.73902
        89.73902  JRB   C     U-235       09999  50S          2/07/89
 W579     TDF     RAS       <          30.0000     0.0000  PCI/G        2/14/89
  R                     A6464    6                                   1
89.73902
        89.73902  JRB   C     U-234       09999  50S          2/07/89
 W579     TDF     RAS       R         660.0000   130.0000  PCI/G        2/14/89
  R                     A6464    6                                   1
89.73902
        89.73902  JRB   C     U-234       09999  50S          2/07/89
 W579     TDF     RAS       R         610.0000   120.0000  PCI/G        2/14/89
  R                     A6464    6                                   1
89.73902
        89.73902  JRB   C     AG          09999  50S          2/07/89
 W579     MCW     FAA       R          26.0000     3.0000  UG/L         4/24/89
  R                     A000029  139  272.1                            1
89.73902
        89.73902  JRB   C     AG          09999  50S          2/07/89
 W579     MCW     FAA       R          27.0000     3.0000  UG/L         4/24/89
  R                     A000029  139  272.1                            1
89.73902
        89.73902  JRB   C     AS          09999  50S          2/07/89
 W579     TMF     ETVAA     R           4.3000     2.0000  UG/L         4/24/89
  R                     A06864   26   206.2                            1
89.73902
        89.73902  JRB   C     AS          09999  50S          2/07/89
 W579     TMF     ETVAA     R           4.3000     2.0000  UG/L         4/24/89
  R                     A06864   26   206.2                            1
89.73902
        89.73902  JRB   C     SE          09999  50S          2/07/89
 W579     TMF     ETVAA     R           1.0000     1.0000  UG/L         4/24/89
  R                     A06864   26   270.2                            1
89.73902
        89.73902  JRB   C     SE          09999  50S          2/07/89
 W579     TMF     ETVAA     <           1.0000     0.0000  UG/L         4/24/89
  R                     A06864   26   270.2                            1
89.73902
        89.73902  JRB   C     HG          09999  50S          2/07/89
 W579     TMF     CVAA      R           0.3600     0.2000  UG/L         4/24/89
  R                     A06864   21   245.1                            1
89.73902
        89.73902  JRB   C     HG          09999  50S          2/07/89
 W579     TMF     CVAA      R           0.2800     0.2000  UG/L         4/24/89
  R                     A06864   21   245.1                            1
89.73902
```

```
      89.73902  JRB   C     BA          09999  50S          2/07/89
 W579     TMF     FAA       R          0.4700     0.1000  MG/L          4/24/89
  R                    000219   111  208.1                          1
89.73902
      89.73902  JRB   C     BA          09999  50S          2/07/89
 W579     TMF     FAA       R          0.4400     0.1000  MG/L          4/24/89
  R                    000219   111  208.1                          1
89.73902
      89.73902  JRB   C     CD          09999  50S          2/07/89
 W579     TMF     FAA       <          5.0000     0.0000  UG/L          4/24/89
  R                    000214   143  213.2                          1
89.73902
      89.73902  JRB   C     CD          09999  50S          2/07/89
 W579     TMF     ETVAA     <          5.0000     0.0000  UG/L          4/24/89
  R                    000214   143  213.2                          1
89.73902
      89.73902  JRB   C     CR          09999  50S          2/07/89
 W579     TMF     FAA       R         58.0000     6.0000  UG/L          4/24/89
  R                    A000029  135  218.2                          1
89.73902
      89.73902  JRB   C     CR          09999  50S          2/07/89
 W579     TMF     FAA       R         60.0000     6.0000  UG/L          4/24/89
  R                    A000029  135  218.2                          1
89.73902
      89.73902  JRB   C     PB          09999  50S          2/07/89
 W579     TMF     FAA       R          0.2100     0.0200  MG/L          4/24/89
  R                    000214   143  239.1                          1
89.73902
      89.73902  JRB   C     PB          09999  50S          2/07/89
 W579     TMF     FAA       R          0.2200     0.0200  MG/L          4/24/89
  R                    000214   143  239.1                          1
89.73902
      89.73902  JRB   C     TL          09999  50S          2/07/89
 W579     TMF     FAA       <          1.0000     0.0000  UG/L          4/24/89
  R                    000214   143  279.2                          1
89.73902
      89.73902  JRB   C     TL          09999  50S          2/07/89
 W579     TMF     FAA       <          1.0000     0.0000  UG/L          4/24/89
  R                    A001794  27   279.2                          1
89.73902
      89.73902  JRB   WW    NI          09999  50S          2/07/89
 W579     MCW     FAA                  0.6300     0.0600  MG/L          5/13/89
  R                                                      1
89.73902
      89.73902  JRB   WW    NI          09999  50S          2/07/89
 W579     MCW     FAA                  0.6000     0.0600  MG/L          5/13/89
  R                                                      1
89.73902
      89.73902  JRB   C     BA          09999  50S          2/07/89
 W579     JDM     ICPES                0.1800     0.0200  MG/L          5/16/89
  R                    12460    42   9999                           1
89.73902
      89.73902  JRB   C     %SOLIDS     09999  50S          2/07/89
 W579     TDF     GRAV                30.6000     0.6000  %             2/09/89
  R                    A001775  29                                     1
89.73902
```

3-1-89.TXT

REPORT NUMBER	SAMPLE NUM	OWNER	MATRIX	ANALYSIS	REQUEST NUM	BATCH	REQUEST DATE	DUE DATE
	89.73903	JRB	C	AM-241	09999	50S	3/14/89	
W579	TDF	GELI			43.0000	7.0000	NCI/G	3/15/89
R			S12463	120			1	
89.73903								
	89.73903	JRB	C	CO-56	09999	50S	3/14/89	
W579	TDF	GELI			920.0000	470.0000	PCI/G	3/15/89
R			S12463	120			1	
89.73903								
	89.73903	JRB	C	CO-57	09999	50S	3/14/89	
W579	TDF	GELI			3.1000	0.6000	NCI/G	3/15/89
R			S12463	120			1	
89.73903								
	89.73903	JRB	C	CO-58	09999	50S	3/14/89	
W579	TDF	GELI			1.7000	0.5000	NCI/G	3/15/89
R			S12463	120			1	
89.73903								
	89.73903	JRB	C	CO-60	09999	50S	3/14/89	
W579	TDF	GELI			810.0000	450.0000	PCI/G	3/15/89
R			S12463	120			1	
89.73903								
	89.73903	JRB	C	CS-137	09999	50S	3/14/89	
W579	TDF	GELI			1.6000	0.6000	NCI/G	3/15/89
R			S12463	120			1	
89.73903								
	89.73903	JRB	C	MN-54	09999	50S	3/14/89	
W579	TDF	GELI			3.3000	0.5000	NCI/G	3/15/89
R			S12463	120			1	
89.73903								
	89.73903	JRB	C	SR-85	09999	50S	3/14/89	
W579	TDF	GELI			2.7000	0.8000	NCI/G	3/15/89
R			S12463	120			1	
89.73903								
	89.73903	JRB	C	SE-75	09999	50S	3/14/89	
W579	TDF	GELI			2.7000	0.8000	NCI/G	3/15/89
R			S12463	120			1	
89.73903								
	89.73903	JRB	C	NB-95	09999	50S	3/14/89	
W579	TDF	GELI			2.1000	0.6000	NCI/G	3/15/89
R			S12463	120			1	
89.73903								
	89.73903	JRB	C	Y-88	09999	50S	3/14/89	
W579	TDF	GELI			17.0000	3.0000	NCI/G	3/15/89
R			S12463	120			1	
89.73903								
	89.73903	JRB	C	ZR-88	09999	50S	3/14/89	
W579	TDF	GELI			5.6000	0.8000	NCI/G	3/15/89
R			S12463	120			1	
89.73903								
	89.73903	JRB	C	SOLIDS	09999	50S	3/14/89	
W579	TDF	GRAV			29.0000	0.6000	%	3/15/89
R			A001775	29			1	
89.73903								
	89.73903	JRB	C	ALPHA	09999	50S	3/14/89	
W579	JL	PC			140.0000	2.0000	NCI/G	3/15/89
R			A5645	28			1	
89.73903								

```
        89.73903  JRB   C     PU-239      09999  50S          3/14/89
 W579     TDF     RAS       R          69.0000     8.0000  NCI/G        3/16/89
  R                     A6464    15                                   1
89.73903
        89.73903  JRB   C     PU-239      09999  50S          3/14/89
 W579     TDF     RAS       R          72.0000     8.0000  NCI/G        3/16/89
  R                     A6464    15                                   1
89.73903
        89.73903  JRB   C     PU-238      09999  50S          3/14/89
 W579     TDF     RAS       R          15.0000     2.0000  NCI/G        3/16/89
  R                     A6464    15                                   1
89.73903
        89.73903  JRB   C     PU-238      09999  50S          3/14/89
 W579     TDF     RAS       R          16.0000     2.0000  NCI/G        3/16/89
  R                     A6464    15                                   1
89.73903
        89.73903  JRB   C     U-234       09999  50S          3/14/89
 W579     TDF     RAS       R         320.0000   300.0000  PCI/G        3/16/89
  R                     A6464    16                                   1
89.73903
        89.73903  JRB   C     U-234       09999  50S          3/14/89
 W579     TDF     RAS       <         330.0000     0.0000  PCI/G        3/16/89
  R                     A6464    16                                   1
89.73903
        89.73903  JRB   C     U-235       09999  50S          3/14/89
 W579     TDF     RAS       <         100.0000     0.0000  PCI/G        3/16/89
  R                     A6464    16                                   1
89.73903
        89.73903  JRB   C     U-235       09999  50S          3/14/89
 W579     TDF     RAS       <         110.0000     0.0000  PCI/G        3/16/89
  R                     A6464    16                                   1
89.73903
        89.73903  JRB   C     HG          09999  50S          3/14/89
 W579     TMF     CVAA      R           2.0000     0.2000  UG/L         5/04/89
  R                     A06864   28   245.1                            1
89.73903
        89.73903  JRB   C     HG          09999  50S          3/14/89
 W579     TMF     CVAA      R           2.3000     0.2000  UG/L         5/04/89
  R                     A06864   28   245.1                            1
89.73903
        89.73903  JRB   C     NI          09999  50S          3/14/89
 W579     MCW     FAA       R           0.6300     0.0600  MG/L         5/04/89
  R                     A000212  35   249.1                            1
89.73903
        89.73903  JRB   C     NI          09999  50S          3/14/89
 W579     MCW     FAA       R           0.6000     0.0600  MG/L         5/04/89
  R                     A000212  35   249.1                            1
89.73903
        89.73903  JRB   C     BA          09999  50S          3/14/89
 W579     JDM     ICPES                 0.3300     0.0300  MG/L         5/22/89
  R                     12460    46   6010                             1
89.73903
        89.73903  JRB   C     BA          09999  50S          3/14/89
 W579     JDM     ICPES     R           0.3200     0.0300  MG/L         5/22/89
  R                     12460    46   6010                             1
89.73903
        89.73903  JRB   C     AS          09999  50S          3/14/89
 W579     TMF     ETVAA     <           2.0000     0.0000  UG/L         6/06/89
  R                     A06864   29   206.2                            1
89.73903
```

89.73903 JRB C AS 09999 50S 3/14/89
W579 TMF ETVAA < 2.0000 0.0000 UG/L 6/06/89
R A06864 29 206.2 1
89.73903

89.73903 JRB C BA 09999 50S 3/14/89
W579 TMF FAA R 2.4000 0.2000 MG/L 6/06/89
R A000219 110 208.1 1
89.73903

89.73903 JRB C BA 09999 50S 3/14/89
W579 TMF FAA R 2.4000 0.2000 MG/L 6/06/89
R A000219 110 208.1 1
89.73903

89.73903 JRB C CD 09999 50S 3/14/89
W579 TMF FAA R 20.0000 2.0000 UG/L 6/06/89
R 000214 150 213.2 1
89.73903

89.73903 JRB C CD 09999 50S 3/14/89
W579 TMF ETVAA R 20.0000 2.0000 UG/L 6/06/89
R 000214 150 1
89.73903

89.73903 JRB C CR 09999 50S 3/14/89
W579 TMF FAA R 69.0000 7.0000 UG/L 6/06/89
R A000029 140 218.2 1
89.73903

89.73903 JRB C CR 09999 50S 3/14/89
W579 TMF ETVAA R 71.0000 7.0000 UG/L 6/06/89
R A000029 140 218.2 1
89.73903

89.73903 JRB C PB 09999 50S 3/14/89
W579 TMF FAA R 0.2800 0.1000 MG/L 6/06/89
R A000214 150 239.1 1
89.73903

89.73903 JRB C PB 09999 50S 3/14/89
W579 TMF FAA R 0.2900 0.1000 MG/L 6/06/89
R A000214 150 239.1 1
89.73903

89.73903 JRB C SE 09999 50S 3/14/89
W579 TMF ETVAA < 1.0000 0.0000 UG/L 6/06/89
R A06864 29 270.2 1
89.73903

89.73903 JRB C SE 09999 50S 3/14/89
W579 TMF ETVAA < 1.0000 0.0000 UG/L 6/06/89
R A06864 29 270.2 1
89.73903

89.73903 JRB C TL 09999 50S 3/14/89
W579 TMF FAA < 2.0000 0.0000 UG/L 6/06/89
R A001794 28 279.2 1
89.73903

89.73903 JRB C TL 09999 50S 3/14/89
W579 TMF FAA < 2.0000 0.0000 UG/L 6/06/89
R A001794 28 279.2 1
89.73903

89.73903 JRB C AG 09999 50S 3/14/89
W579 MCW FAA R 0.0360 0.0040 MG/L 6/06/89
R A000029 130 272.1 1
89.73903

89.73903 JRB C AG 09999 50S 3/14/89
W579 MCW FAA R 0.0420 0.0040 MG/L 6/06/89
R A000029 130 272.1 1
89.73903

REPORT NUMBER	SAMPLE NUM	OWNER	MATRIX	ANALYSIS	REQUEST NUM	BATCH	REQUEST DATE	DUE DATE
	89.73904	JRB	C	ALPHA	09999	50S	5/04/89	
W579	JL	PC			146.0000	2.0000	NCI/G	5/08/89
R			A5645	32			1	
89.73904								
	89.73904	JRB	C	AM-241	09999	50S	5/04/89	
W579	TDF	GELI			58.0000	9.0000	NCI/G	5/10/89
R			A6466	18			1	
89.73904								
	89.73904	JRB	C	CO-60	09999	50S	5/04/89	
W579	TDF	GELI			1.6000	0.6000	NCI/G	5/10/89
R			A6466	18			1	
89.73904								
	89.73904	JRB	C	CS-137	09999	50S	5/04/89	
W579	TDF	GELI			1.3000	0.5000	NCI/G	5/10/89
R			A6466	18			1	
89.73904								
	89.73904	JRB	C	MN-54	09999	50S	5/04/89	
W579	TDF	GELI			800.0000	440.0000	PCI/G	5/10/89
R			A6466	18			1	
89.73904								
	89.73904	JRB	C	SR-85	09999	50S	5/04/89	
W579	TDF	GELI			1.1000	0.6000	NCI/G	5/10/89
R			A6466	18			1	
89.73904								
	89.73904	JRB	C	SOLIDS	09999	50S	5/04/89	
W579	TDF	GRAV			33.1000	0.7000	%	5/10/89
R			A001775	29			1	
89.73904								
	89.73904	JRB	C	ZR-88	09999	50S	5/04/89	
W579	TDF	GELI			1.2000	0.4000	NCI/G	5/10/89
R			A6466	18			1	
89.73904								
	89.73904	JRB	C	PU-239	09999	50S	5/04/89	
W579	TDF	RAS		R	81.0000	9.0000	NCI/G	5/11/89
R			A6464	30			1	
89.73904								
	89.73904	JRB	C	PU-239	09999	50S	5/04/89	
W579	TDF	RAS		R	80.0000	9.0000	NCI/G	5/11/89
R			A6464	30			1	
89.73904								
	89.73904	JRB	C	PU-238	09999	50S	5/04/89	
W579	TDF	RAS		R	23.0000	3.0000	NCI/G	5/11/89
R			A6464	30			1	
89.73904								
	89.73904	JRB	C	PU-238	09999	50S	5/04/89	
W579	TDF	RAS		R	22.0000	3.0000	NCI/G	5/11/89
R			A6464	30			1	
89.73904								
	89.73904	JRB	C	U-235	09999	50S	5/04/89	
W579	TDF	RAS		R	26.0000	19.0000	PCI/G	5/17/89
R			A6464	32			1	
89.73904								
	89.73904	JRB	C	U-235	09999	50S	5/04/89	
W579	TDF	RAS		R	60.0000	24.0000	PCI/G	5/17/89
R			A6464	32			1	
89.73904								

```
      89.73904  JRB   C     U-234       09999  50S          5/04/89
 W579     TDF     RAS       R        830.0000   110.0000  PCI/G        5/17/89
  R                    A6464    32                                  1
89.73904
      89.73904  JRB   C     U-234       09999  50S          5/04/89
 W579     TDF     RAS       R          1.0000     0.1000  NCI/G        5/17/89
  R                    A6464    32                                  1
89.73904
      89.73904  JRB   C     AS          09999  50S          5/04/89
 W579     TMF     ETVAA     R          3.0000     1.0000  UG/L         8/07/89
  R                    A6864    39   206.2                            1
89.73904
      89.73904  JRB   C     AS          09999  50S          5/04/89
 W579     TMF     ETVAA     R          3.0000     1.0000  UG/L         8/07/89
  R                    A6864    39   206.2                            1
89.73904
      89.73904  JRB   C     BA          09999  50S          5/04/89
 W579     TMF     FAA       R          0.7700     0.0800  MG/L         8/07/89
  R                    000219   114  208.1                            1
89.73904
      89.73904  JRB   C     BA          09999  50S          5/04/89
 W579     TMF     FAA       R          0.8500     0.0900  MG/L         8/07/89
  R                    000219   114  208.1                            1
89.73904
      89.73904  JRB   C     CD          09999  50S          5/04/89
 W579     TMF     FAA       R          7.0000     5.0000  UG/L         8/28/89
  R                    A7235    3    7130                             1
89.73904
      89.73904  JRB   C     CD          09999  50S          5/04/89
 W579     TMF     FAA       <          5.0000     0.0000  UG/L         8/28/89
  R                    A7235    3    7130                             1
89.73904
      89.73904  JRB   C     AG          09999  50S          5/04/89
 W579     TMF     FAA       R         18.0000     2.0000  UG/L         8/07/89
  R                    000029   152  272.1                            1
89.73904
      89.73904  JRB   C     AG          09999  50S          5/04/89
 W579     TMF     FAA       R         15.0000     2.0000  UG/L         8/07/89
  R                    000029   152  272.1                            1
89.73904
      89.73904  JRB   C     SE          09999  50S          5/04/89
 W579     TMF     ETVAA     <          1.0000     0.0000  UG/L         8/07/89
  R                    A6864    39   270.2                            1
89.73904
      89.73904  JRB   C     SE          09999  50S          5/04/89
 W579     TMF     ETVAA     <          1.0000     0.0000  UG/L         8/07/89
  R                    A6864    39   270.2                            1
89.73904
      89.73904  JRB   C     PB          09999  50S          5/04/89
 W579     TMF     FAA       <          0.0500     0.0000  MG/L         8/28/89
  R                    A7235    3    7420                             1
89.73904
      89.73904  JRB   C     PB          09999  50S          5/04/89
 W579     TMF     FAA       <          0.0500     0.0000  MG/L         8/28/89
  R                    A7235    3    7420                             1
89.73904
      89.73904  JRB   C     CR          09999  50S          5/04/89
 W579     TMF     FAA       R         22.0000     2.0000  UG/L         8/28/89
  R                    A000029  151  7190                             1
89.73904
```

```
        89.73904  JRB   C     CR          09999  50S          5/04/89
 W579     TMF     FAA       R          20.0000     2.0000  UG/L          8/28/89
  R                     A000029  151  7190                              1
89.73904
        89.73904  JRB   C     HG          09999  50S          5/04/89
 W579     TMF     CVAA      <           0.2000     0.0000  UG/L          8/28/89
  R                     A6864    41   7480                              1
89.73904
        89.73904  JRB   C     HG          09999  50S          5/04/89
 W579     TMF     CVAA      <           0.2000     0.0000  UG/L          8/28/89
  R                     A6864    41   7480                              1
89.73904
        89.73904  JRB   C     NI          09999  50S          5/04/89
 W579     TMF     FAA       R          51.0000    40.0000  UG/L          8/28/89
  R                     000212   37   7520                              1
89.73904
        89.73904  JRB   C     NI          09999  50S          5/04/89
 W579     TMF     FAA       R          48.0000    40.0000  UG/L          8/28/89
  R                     000212   37   7520                              1
89.73904
        89.73904  JRB   C     TL          09999  50S          5/04/89
 W579     TMF     ETVAA     R           1.0000     1.0000  UG/L          8/28/89
  R                     000212   31   7841                              1
89.73904
        89.73904  JRB   C     TL          09999  50S          5/04/89
 W579     TMF     ETVAA     R           1.5000     1.0000  UG/L          8/28/89
  R                     A1794    31                                     1
89.73904
```

REPORT NUMBER	SAMPLE NUM	OWNER	MATRIX	ANALYSIS	REQUEST NUM	BATCH	REQUEST DATE	DUE DATE
	89.73906	JRB	C	AS	09999	50S	7/03/89	
W579	TMF	ETVAA	R		4.1000	1.0000	UG/L	10/11/89
R			A6864	53	7060		1	
89.73906								
	89.73906	JRB	C	AS	09999	50S	7/03/89	
W579	TMF	ETVAA	R		4.1000	1.0000	UG/L	10/11/89
R			A6864	53	7060		1	
89.73906								
	89.73906	JRB	C	BA	09999	50S	7/03/89	
W579	TMF	FAA	R		0.4100	0.1000	MG/L	10/11/89
R			000219	116	7080		1	
89.73906								
	89.73906	JRB	C	BA	09999	50S	7/03/89	
W579	TMF	FAA	R		0.4100	0.1000	MG/L	10/11/89
R			000219	116	7080		1	
89.73906								
	89.73906	JRB	C	BA	09999	50S	7/03/89	
W579	TMF	FAA	R		0.5000	0.6000	MG/L	10/11/89
R			000219	116	7080		1	
89.73906								
	89.73906	JRB	C	CD	09999	50S	7/03/89	
W579	TMF	FAA	R		0.2000	0.0200	MG/L	10/11/89
R			A7235	14	7130		1	
89.73906								
	89.73906	JRB	C	CD	09999	50S	7/03/89	
W579	TMF	FAA	R		0.2000	0.0200	MG/L	10/11/89
R			A7235	14	7130		1	
89.73906								
	89.73906	JRB	C	AM-241	09999	50S	7/03/89	
W579	TDF	GELI			23.0000	3.0000	NCI/G	7/06/89
R			A6466	73			1	
89.73906								
	89.73906	JRB	C	CS-137	09999	50S	7/03/89	
W579	TDF	GELI			1.0000	0.5000	NCI/G	7/06/89
R			A6466	73			1	
89.73906								
	89.73906	JRB	C	SR-85	09999	50S	7/03/89	
W579	TDF	GELI			1.1000	0.6000	NCI/G	7/06/89
R			A6466	73			1	
89.73906								
	89.73906	JRB	C	Y-88	09999	50S	7/03/89	
W579	TDF	GELI			1.8000	0.4000	NCI/G	7/06/89
R			A6466	73			1	
89.73906								
	89.73906	JRB	C	ZR-88	09999	50S	7/03/89	
W579	TDF	GELI			820.0000	470.0000	PCI/G	7/06/89
R			A6466	73			1	
89.73906								
	89.73906	JRB	C	SOLIDS	09999	50S	7/03/89	
W579	TDF	GRAV			26.2000	0.5000	%	7/06/89
R			A001775	30			1	
89.73906								
	89.73906	JRB	C	ALPHA	09999	50S	7/03/89	
W579	JL	PC			121.0000	2.0000	NCI/G	7/06/89
R			A5645	34			1	
89.73906								

89.73906 JRB C PU-239 09999 50S 7/03/89
W579 TDF RAS R 62.0000 7.0000 NCI/G 7/07/89
R A6464 48 1
89.73906

89.73906 JRB C PU-239 09999 50S 7/03/89
W579 TDF RAS R 67.0000 8.0000 NCI/G 7/07/89
R A6464 48 1
89.73906

89.73906 JRB C PU-238 09999 50S 7/03/89
W579 TDF RAS R 29.0000 4.0000 NCI/G 7/07/89
R A6464 48 1
89.73906

89.73906 JRB C PU-238 09999 50S 7/03/89
W579 TDF RAS R 27.0000 3.0000 NCI/G 7/07/89
R A6464 48 1
89.73906

89.73906 JRB C U-235 09999 50S 7/03/89
W579 TDF RAS R 17.0000 14.0000 PCI/G 7/11/89
R A6464 49 1
89.73906

89.73906 JRB C U-235 09999 50S 7/03/89
W579 TDF RAS R 51.0000 22.0000 PCI/G 7/11/89
R A6464 49 1
89.73906

89.73906 JRB C U-234 09999 50S 7/03/89
W579 TDF RAS R 420.0000 70.0000 PCI/G 7/11/89
R A6464 49 1
89.73906

89.73906 JRB C U-234 09999 50S 7/03/89
W579 TDF RAS R 540.0000 90.0000 PCI/G 7/11/89
R A6464 49 1
89.73906

89.73906 JRB C AG 09999 50S 7/03/89
W579 TMF FAA R 13.0000 3.0000 UG/L 10/11/89
R A6465 10 272.1 1
89.73906

89.73906 JRB C AG 09999 50S 7/03/89
W579 TMF FAA R 13.0000 3.0000 UG/L 10/11/89
R A6465 10 272.1 1
89.73906

89.73906 JRB C SE 09999 50S 7/03/89
W579 TMF ETVAA < 1.0000 0.0000 UG/L 10/11/89
R A6864 53 7740 1
89.73906

89.73906 JRB C SE 09999 50S 7/03/89
W579 TMF ETVAA < 1.0000 0.0000 UG/L 10/11/89
R A6864 53 7740 1
89.73906

89.73906 JRB C HG 09999 50S 7/03/89
W579 TMF CVAA < 0.2000 0.0000 UG/L 10/11/89
R A6864 41 7480 1
89.73906

89.73906 JRB C HG 09999 50S 7/03/89
W579 TMF CVAA < 0.2000 0.0000 UG/L 10/11/89
R A6864 41 7480 1
89.73906

89.73906 JRB C PB 09999 50S 7/03/89
W579 TMF FAA R 0.1200 0.0500 MG/L 10/11/89
R A7235 14 7420 1
89.73906

```
        89.73906  JRB   C      PB          09999  50S          7/03/89
 W579     TMF     FAA        R          0.1100     0.0500  MG/L         10/11/89
  R                     A7235     14   7420                            1
89.73906
        89.73906  JRB   C      CR          09999  50S          7/03/89
 W579     TMF     FAA        R         68.0000    40.0000  UG/L         10/11/89
  R                     A6465     8    7190                            1
89.73906
        89.73906  JRB   C      CR          09999  50S          7/03/89
 W579     TMF     FAA        R         64.0000    40.0000  UG/L         10/11/89
  R                     A6465     8    7190                            1
89.73906
        89.73906  JRB   C      NI          09999  50S          7/03/89
 W579     TMF     FAA        R          0.0600     0.0400  MG/L         10/11/89
  R                     000212    37   7520                            1
89.73906
        89.73906  JRB   C      NI          09999  50S          7/03/89
 W579     TMF     FAA        R          0.0600     0.0400  MG/L         10/11/89
  R                     000212    37   7520                            1
89.73906
        89.73906  JRB   C      TL          09999  50S          7/03/89
 W579     TMF     ETVAA      R          1.0000     1.0000  UG/L         10/11/89
  R                     A1794     31   7841                            1
89.73906
        89.73906  JRB   C      TL          09999  50S          7/03/89
 W579     TMF     ETVAA      R          1.5000     1.0000  UG/L         10/11/89
  R                     A1794     31   7841                            1
89.73906
```

91189.TXT

REPORT NUMBER	SAMPLE NUM	OWNER	MATRIX	ANALYSIS	REQUEST NUM	BATCH	REQUEST DATE	DUE DATE
	89.73908	JRB	C	SOLIDS	09999	50S	9/11/89	
W579	TDF	GRAV			29.4000	0.6000	%	9/11/89
R			A001775	30			1	
89.73908								
	89.73908	JRB	C	ALPHA	09999	50S	9/11/89	
W579	JL	PC			162.0000	2.0000	NCI/G	9/11/89
R			A5645	38			1	
89.73908								
	89.73908	JRB	C	AM-241	09999	50S	9/11/89	
W579	TDF	GELI			44.0000	7.0000	NCI/G	9/11/89
R			A6466	126			1	
89.73908								
	89.73908	JRB	C	CO-57	09999	50S	9/11/89	
W579	TDF	GELI			3.3000	0.5000	NCI/G	9/11/89
R			A6466	126			1	
89.73908								
	89.73908	JRB	C	CO-58	09999	50S	9/11/89	
W579	TDF	GELI			7.7000	0.5000	NCI/G	9/11/89
R			A6466	126			1	
89.73908								
	89.73908	JRB	C	CO-60	09999	50S	9/11/89	
W579	TDF	GELI			790.0000	580.0000	PCI/G	9/11/89
R			A6466	126			1	
89.73908								
	89.73908	JRB	C	SR-85	09999	50S	9/11/89	
W579	TDF	GELI			2.5000	0.4000	NCI/G	9/11/89
R			A6466	126			1	
89.73908								
	89.73908	JRB	C	SE-75	09999	50S	9/11/89	
W579	TDF	GELI			3.0000	0.6000	NCI/G	9/11/89
R			A6466	126			1	
89.73908								
	89.73908	JRB	C	NB-95	09999	50S	9/11/89	
W579	TDF	GELI			8.2000	1.2000	NCI/G	9/11/89
R			A6466	126			1	
89.73908								
	89.73908	JRB	C	Y-88	09999	50S	9/11/89	
W579	TDF	GELI			14.0000	2.0000	NCI/G	9/11/89
R			A6466	126			1	
89.73908								
	89.73908	JRB	C	ZN-65	09999	50S	9/11/89	
W579	TDF	GELI			3.5000	1.7000	NCI/G	9/11/89
R			A6466	126			1	
89.73908								
	89.73908	JRB	C	ZR-88	09999	50S	9/11/89	
W579	TDF	GELI			15.0000	2.0000	NCI/G	9/11/89
R			A6466	126			1	
89.73908								
	89.73908	JRB	C	PU-239	09999	50S	9/11/89	
W579	TDF	RAS	R		88.0000	10.0000	NCI/G	9/12/89
R			A6464	67			1	
89.73908								
	89.73908	JRB	C	PU-239	09999	50S	9/11/89	
W579	TDF	RAS	R		80.0000	10.0000	NCI/G	9/12/89
R			A6464	67			1	
89.73908								

```
      89.73908  JRB   C     PU-238      09999  50S          9/11/89
 W579     TDF     RAS       R          27.0000     3.0000  NCI/G        9/12/89
  R                    A6464    67                                   1
89.73908
      89.73908  JRB   C     PU-238      09999  50S          9/11/89
 W579     TDF     RAS       R          27.0000     3.0000  NCI/G        9/12/89
  R                    A6464    67                                   1
89.73908
      89.73908  JRB   C     U-235       09999  50S          9/11/89
 W579     TDF     RAS       R          50.0000    40.0000  PCI/G        9/15/89
  R                    A6464    68                                   1
89.73908
      89.73908  JRB   C     U-235       09999  50S          9/11/89
 W579     TDF     RAS       R         120.0000    60.0000  PCI/G        9/15/89
  R                    A6464    68                                   1
89.73908
      89.73908  JRB   C     U-234       09999  50S          9/11/89
 W579     TDF     RAS       R         810.0000   110.0000  PCI/G        9/15/89
  R                    A6464    68                                   1
89.73908
      89.73908  JRB   C     U-234       09999  50S          9/11/89
 W579     TDF     RAS       R         980.0000   130.0000  PCI/G        9/15/89
  R                    A6464    68                                   1
89.73908
      89.73908  CMJ   C     HG          09999  50S          9/11/89
 WA45     MAB     CVAA      <           0.2000     0.0000  UG/L        12/14/89
  R                    A6863     4    7480                             1
89.73908
      89.73908  CMJ   C     HG          09999  50S          9/11/89
 WA45     MAB     CVAA      <           0.2000     0.0000  UG/L        12/14/89
  R                    A6863     4    7480                             1
89.73908
      89.73908  JRB   C     SE          09999  50S          9/11/89
 WA45     TMF     ETVAA     <           1.0000     0.0000  UG/L        12/14/89
  R                    A6864    66    7740                             1
89.73908
      89.73908  JRB   C     SE          09999  50S          9/11/89
 WA45     TMF     ETVAA     <           1.0000     0.0000  UG/L        12/14/89
  R                    A6864    66    7740                             1
89.73908
      89.73908  JRB   C     AS          09999  50S          9/11/89
 WA45     TMF     ETVAA     R           4.9000     2.0000  UG/L        12/14/89
  R                    A6864    66    7060                             1
89.73908
      89.73908  JRB   C     AS          09999  50S          9/11/89
 WA45     TMF     ETVAA     R           5.1000     2.0000  UG/L        12/14/89
  R                    A6864    66    7060                             1
89.73908
      89.73908  JRB   C     AG          09999  50S          9/11/89
 WA45     TMF     FAA       R          23.0000     3.0000  UG/L        12/14/89
  R                    A6465    14    7760                             1
89.73908
      89.73908  JRB   C     AG          09999  50S          9/11/89
 WA45     TMF     FAA       R          19.0000     3.0000  UG/L        12/14/89
  R                    A6465    14    7760                             1
89.73908
      89.73908  JRB   C     BA          09999  50S          9/11/89
 WA45     TMF     FAA       R           2.8000     0.3000  MG/L        12/14/89
  R                    000219   119    7080                             1
89.73908
```

89.73908 JRB C BA 09999 50S 9/11/89
WA45 TMF FAA R 2.6000 0.3000 MG/L 12/14/89
R 000219 119 7080 1
89.73908
89.73908 JRB C CD 09999 50S 9/11/89
WA45 TMF ETVAA R 0.2900 0.1000 UG/L 12/14/89
R A7235 14 7130 1
89.73908
89.73908 JRB C CD 09999 50S 9/11/89
WA45 TMF ETVAA R 0.1900 0.1000 UG/L 12/14/89
R A7235 14 7130 1
89.73908
89.73908 JRB C PB 09999 50S 9/11/89
WA45 TMF ETVAA 6.0000 1.0000 UG/L 12/14/89
R A7235 14 7420 1
89.73908
89.73908 JRB C CR 09999 50S 9/11/89
WA45 TMF ETVAA R 7.2000 1.0000 UG/L 12/14/89
R A6465 20. 7190 1
89.73908
89.73908 JRB C CR 09999 50S 9/11/89
WA45 TMF ETVAA R 7.0000 1.0000 UG/L 12/14/89
R A6465 20. 7190 1
89.73908
89.73908 JRB C NI 09999 50S 9/11/89
WA45 TMF FAA R 0.0610 0.0400 MG/L 12/14/89
R 000212 39 7520. 1
89.73908
89.73908 JRB C NI 09999 50S 9/11/89
WA45 TMF FAA 0.0560 0.0400 MG/L 12/14/89
R 000212 39 7520. 1
89.73908
89.73908 JRB C TL 09999 50S 9/11/89
WA45 TMF ETVAA < 1.0000 0.0000 UG/L 12/14/89
R A1794 33 7841 1
89.73908
89.73908 JRB C TL 09999 50S 9/11/89
WA45 TMF ETVAA R 1.0000 1.0000 UG/L 12/14/89
R A1794 33 7841 1
89.73908

REPORT NUMBER	SAMPLE NUM	OWNER	MATRIX	ANALYSIS	REQUEST NUM	BATCH	REQUEST DATE	DUE DATE
	89.73909	JRB	C	ALPHA	09999	50S	10/10/89	
WA45	JL	PC			245.0000	3.0000	NCI/G	10/12/89
R			A5645	40			1	
89.73909								
	89.73909	JRB	C	AM-241	09999	50S	10/10/89	
WA45	TDF	GELI			43.0000	6.0000	NCI/G	10/12/89
R			A6466	152			1	
89.73909								
	89.73909	JRB	C	CO-57	09999	50S	10/10/89	
WA45	TDF	GELI			5.6000	0.8000	NCI/G	10/12/89
R			A6466	152			1	
89.73909								
	89.73909	JRB	C	CO-58	09999	50S	10/10/89	
WA45	TDF	GELI			9.5000	1.4000	NCI/G	10/12/89
R			A6466	152			1	
89.73909								
	89.73909	JRB	C	CO-56	09999	50S	10/10/89	
WA45	TDF	GELI			2.9000	0.6000	NCI/G	10/12/89
R			A6466	152			1	
89.73909								
	89.73909	JRB	C	BE-7	09999	50S	10/10/89	
WA45	TDF	GELI			9.0000	5.0000	NCI/G	10/12/89
R			A6466	152			1	
89.73909								
	89.73909	JRB	C	CS-137	09999	50S	10/10/89	
WA45	TDF	GELI			950.0000	660.0000	PCI/G	10/12/89
R			A6466	152			1	
89.73909								
	89.73909	JRB	C	MN-54	09999	50S	10/10/89	
WA45	TDF	GELI			2.8000	0.8000	NCI/G	10/12/89
R			A6466	152			1	
89.73909								
	89.73909	JRB	C	SE-75	09999	50S	10/10/89	
WA45	TDF	GELI			4.7000	0.8000	NCI/G	10/12/89
R			A6466	152			1	
89.73909								
	89.73909	JRB	C	NB-95	09999	50S	10/10/89	
WA45	TDF	GELI			4.8000	0.8000	NCI/G	10/12/89
R			A6466	152			1	
89.73909								
	89.73909	JRB	C	Y-88	09999	50S	10/10/89	
WA45	TDF	GELI			62.0000	9.0000	NCI/G	10/12/89
R			A6466	152			1	
89.73909								
	89.73909	JRB	C	ZN-65	09999	50S	10/10/89	
WA45	TDF	GELI			9.8000	2.0000	NCI/G	10/12/89
R			A6466	152			1	
89.73909								
	89.73909	JRB	C	ZR-88	09999	50S	10/10/89	
WA45	TDF	GELI			49.0000	7.0000	NCI/G	10/12/89
R			A6466	152			1	
89.73909								
	89.73909	JRB	C	SOLIDS	09999	50S	10/10/89	
WA45	TDF	GELI			23.8000	0.4000	NONE	10/12/89
R			A001775	31			1	
89.73909								

10 10 89. -1T

SK

```
        89.73909  JRB   C      PU-239       09999  50S          10/10/89
 WA45     TDF     RAS        R          88.0000    10.0000  NCI/G        10/13/89
  R                     A6464     73                                   1
89.73909
        89.73909  JRB   C      PU-239       09999  50S          10/10/89
 WA45     TDF     RAS        R          96.0000    11.0000  NCI/G        10/13/89
  R                     A6464     73                                   1
89.73909
        89.73909  JRB   C      PU-238       09999  50S          10/10/89
 WA45     TDF     RAS        R          76.0000     9.0000  NCI/G        10/13/89
  R                     A6464     73                                   1
89.73909
        89.73909  JRB   C      PU-238       09999  50S          10/10/89
 WA45     TDF     RAS        R          68.0000     8.0000  NCI/G        10/13/89
  R                     A6464     73                                   1
89.73909
        89.73909  JRB   C      U-235        09999  50S          10/10/89
 WA45     TDF     RAS        R          30.0000    30.0000  PCI/G        10/18/89
  R                     A6464     75   0                               1
89.73909
        89.73909  JRB   C      U-235        09999  50S          10/10/89
 WA45     TDF     RAS        R          33.0000    30.0000  PCI/G        10/18/89
  R                     A6464     75   0                               1
89.73909
        89.73909  JRB   C      U-234        09999  50S          10/10/89
 WA45     TDF     RAS        R         710.0000   100.0000  PCI/G        10/18/89
  R                     A6464     75   0                               1
89.73909
        89.73909  JRB   C      U-234        09999  50S          10/10/89
 WA45     TDF     RAS        R         700.0000   100.0000  PCI/G        10/18/89
  R                     A6464     75   0                               1
89.73909

REPORT  SAMPLE                                REQUEST              REQUEST    DUE
NUMBER   NUM    OWNER MATRIX  ANALYSIS        NUM       BATCH       DATE      DATE

        89.73909  JRB   C      AG           09999                  10/10/89
 WA45     MCW     FAA        <           3.0000     0.0000  UG/L         1/30/90
  R                     A6465     29   7760                            1
50S
        89.73909  JRB   C      AG           09999                  10/10/89
 WA45     MCW     FAA        <           3.0000     0.0000  UG/L         1/30/90
  R                     A6465     29   7760                            1
50S
        89.73909  JRB   C      CD           09999                  10/10/89
 WA45     MCW     ETVAA                   1.8000     0.4000  UG/L         1/30/90
  R                     A7235     24   7130                            1
50S
        89.73909  JRB   C      CD           09999                  10/10/89
 WA45     MCW     ETVAA                   1.8000     0.4000  UG/L         1/30/90
  R                     A7235     24   7130                            1
50S
        89.73909  JRB   C      PB           09999                  10/10/89
 WA45     MCW     ETVAA                  36.0000     7.0000  UG/L         1/30/90
  R                     A7235     24   7420                            1
50S
        89.73909  JRB   C      PB           09999                  10/10/89
 WA45     MCW     ETVAA                  35.0000     7.0000  UG/L         1/30/90
  R                     A7235     24   7420                            1
50S
```

```
      89.73909  JRB   C     CR          09999              10/10/89
 WA45    MCW     ETVAA                 46.0000     9.0000  UG/L          1/30/90
  R                     A6465    30   7190                          1
 50S
      89.73909  JRB   C     CR          09999              10/10/89
 WA45    MCW     ETVAA                 39.0000     8.0000  UG/L          1/30/90
  R                     A6465    30   7190                          1
 50S
      89.73909  JRB   C     NI          09999              10/10/89
 WA45    MCW     FAA                    0.4400     0.0400  MG/L          1/30/90
  R                     A000212  40   7520                          1
 50S
      89.73909  JRB   C     NI          09999              10/10/89
 WA45    MCW     FAA                    0.4400     0.0400  MG/L          1/30/90
  R                     A000212  40   7520                          1
 50S
      89.73909  JRB   C     HG          09999              10/10/89
 WA45    TMF     CVAA      <            0.2000     0.0000  UG/L          1/30/90
  R                     A6863    18   7480                          1
 50S
      89.73909  JRB   C     HG          09999              10/10/89
 WA45    TMF     CVAA      <            0.2000     0.0000  UG/L          1/30/90
  R                     A6863    18   7480                          1
 50S
      89.73909  JRB   C     AS          09999              10/10/89
 WA45    TMF     ETVAA                  5.6000     2.0000  UG/L          4/13/90
  R                     A6964    79   7060                          1
 50S          R
      89.73909  JRB   C     AS          09999              10/10/89
 WA45    TMF     ETVAA                  6.1000     2.0000  UG/L          4/13/90
  R                     A6964    79   7060                          1
 50S          R
      89.73909  JRB   C     SE          09999              10/10/89
 WA45    TMF     ETVAA     <            1.0000     0.0000  UG/L          4/13/90
  R                     A6964    79   7740                          1
 50S
      89.73909  JRB   C     SE          09999              10/10/89
 WA45    TMF     ETVAA     <            1.0000     0.0000  UG/L          4/13/90
  R                     A6964    79   7740                          1
 50S
      89.73909  JRB   C     TL          09999              10/10/89
 WA45    TMF     ETVAA     <            1.0000     0.0000  UG/L          4/13/90
  R                     A1794    36   7841                          1
 50S
      89.73909  JRB   C     TL          09999              10/10/89
 WA45    TMF     ETVAA     <            1.0000     0.0000  UG/L          4/13/90
  R                     A1794    36   7841                          1
 50S
      89.73909  JRB   C     BA          09999              10/10/89
 WA45    MCW     FAA                    2.2000     0.2000  MG/L          4/13/90
  R                     000219   120  7080                          1
 50S          R
      89.73909  JRB   C     BA          09999              10/10/89
 WA45    MCW     FAA                    2.4000     0.2000  MG/L          4/13/90
  R                     000219   120  7080                          1
 50S          R
```

REPORT NUMBER	SAMPLE NUM	OWNER	MATRIX	ANALYSIS	REQUEST NUM	BATCH	REQUEST DATE	DUE DATE
	90.73901	JRB	C	SOLIDS	09999		1/11/90	
WA45	TDF	GRAV			26.0000	0.5000	%	1/18/90
R			A001775	31	0		1	
50S								
	90.73901	JRB	C	ALPHA	09999		1/11/90	
WA45	TDF	PC			153.0000	3.0000	NCI/G	1/18/90
R			A5645	46	0		1	
50S								
	90.73901	JRB	C	AM-241	09999		1/11/90	
WA45	TDF	GELI			49.0000	7.0000	NCI/G	1/18/90
R			S8207	86	0		1	
50S								
	90.73901	JRB	C	CS-137	09999		1/11/90	
WA45	TDF	GELI			3.3000	1.2000	NCI/G	1/18/90
R			S8207	86	0		1	
50S								
	90.73901	JRB	C	SE-75	09999		1/11/90	
WA45	TDF	GELI			4.5000	1.5000	NCI/G	1/18/90
R			S8207	86	0		1	
50S								
	90.73901	JRB	C	Y-88	09999		1/11/90	
WA45	TDF	GELI			8.6000	1.3000	NCI/G	1/18/90
R			S8207	86	0		1	
50S								
	90.73901	JRB	C	ZR-88	09999		1/11/90	
WA45	TDF	GELI			2.9000	1.5000	NCI/G	1/18/90
R			S8207	86	0		1	
50S								
	90.73901	JRB	C	PU-239	09999	0	1/11/90	
WA45	TDF	RAS			57.0000	7.0000	NCI/G	1/19/90
R			A6464	95	0		1	
50S	R							
	90.73901	JRB	C	PU-239	09999	0	1/11/90	
WA45	TDF	RAS			57.0000	7.0000	NCI/G	1/19/90
R			A6464	95	0		1	
50S	R							
	90.73901	JRB	C	PU-238	09999	0	1/11/90	
WA45	TDF	RAS			25.0000	3.0000	NCI/G	1/19/90
R			A6464	95	0		1	
50S	R							
	90.73901	JRB	C	PU-238	09999	0	1/11/90	
WA45	TDF	RAS			23.0000	3.0000	NCI/G	1/19/90
R			A6464	95	0		1	
50S	R							
	90.73901	JRB	C	U-235	09999		1/11/90	
WA45	TDF	RAS			6.0000	6.0000	PCI/G	1/23/90
R			A6464	97	0		1	
50S	R							
	90.73901	JRB	C	U-235	09999		1/11/90	
WA45	TDF	RAS			15.0000	9.0000	PCI/G	1/23/90
R			A6464	97	0		1	
50S	R							
	90.73901	JRB	C	U-234	09999		1/11/90	
WA45	TDF	RAS			400.0000	60.0000	PCI/G	1/23/90
R			A6464	97	0		1	
50S	R							

```
      90.73901  JRB   C     U-234      09999              1/11/90
 WA45    TDF     RAS                 350.0000   60.0000  PCI/G        1/23/90
  R                    A6464    97   0                              1
50S          R
      90.73901  JRB   C     HG         09999              1/11/90
 WA45    TMF     CVAA       <          0.2000    0.0000  UG/L         1/30/90
  R                    A6863    18   7480                           1
50S
      90.73901  JRB   C     HG         09999              1/11/90
 WA45    TMF     CVAA       <          0.2000    0.0000  UG/L         1/30/90
  R                    A6863    18   7480                           1
50S
      90.73901  JRB   C     AG         09999              1/11/90
 WA45    MCW     FAA        <          3.0000    0.0000  UG/L         1/30/90
  R                    A6465    29   7760                           1
50S
      90.73901  JRB   C     AG         09999              1/11/90
 WA45    MCW     FAA        <          3.0000    0.0000  UG/L         1/30/90
  R                    A6465    29   7760                           1
50S
      90.73901  JRB   C     AG         09999              1/11/90
 WA45    MCW     FAA                 400.0000  399.0000  UG/L         1/30/90
  R                    A6465    29   7760                           1
50S
      90.73901  JRB   C     CR         09999              1/11/90
 WA45    MCW     ETVAA                8.8000    1.7000  UG/L         1/30/90
  R                    A6465    30   7190                           1
50S
      90.73901  JRB   C     CR         09999              1/11/90
 WA45    MCW     ETVAA                9.2000    1.8000  UG/L         1/30/90
  R                    A6465    30   7190                           1
50S
      90.73901  JRB   C     NI         09999              1/11/90
 WA45    MCW     FAA                  0.5200    0.0500  MG/L         1/30/90
  R                    A000212  40   7520                           1
50S
      90.73901  JRB   C     NI         09999              1/11/90
 WA45    MCW     FAA                  0.5200    0.0500  MG/L         1/30/90
  R                    A000212  40   7520                           1
50S
      90.73901  JRB   C     CD         09999              1/11/90
 WA45    MCW     ETVAA                3.4000    0.7000  UG/L         1/30/90
  R                    A7235    24   7130                           1
50S
      90.73901  JRB   C     CD         09999              1/11/90
 WA45    MCW     ETVAA                3.6000    0.7000  UG/L         1/30/90
  R                    A7235    24   7130                           1
50S
      90.73901  JRB   C     PB         09999              1/11/90
 WA45    MCW     ETVAA               11.0000    2.2000  UG/L         1/30/90
  R                    A7235    24   7420                           1
50S
      90.73901  JRB   C     PB         09999              1/11/90
 WA45    MCW     ETVAA                9.0000    1.8000  UG/L         1/30/90
  R                    A7235    24   7420                           1
50S
      90.73901  JRB   C     AS         09999              1/11/90
 WA45    TMF     ETVAA                5.5000    2.0000  UG/L         4/13/90
  R                    A6964    79   7060                           1
50S          R
```

```
        90.73901  JRB   C      AS          09999                1/11/90
 WA45     TMF     ETVAA                   5.4000     2.0000  UG/L          4/13/90
  R                     A6964     79   7060                            1
 50S          R
        90.73901  JRB   C      SE          09999                1/11/90
 WA45     TMF     ETVAA                   1.8000     1.0000  UG/L          4/13/90
  R                     A6964     79   7740                            1
 50S          R
        90.73901  JRB   C      SE          09999                1/11/90
 WA45     TMF     ETVAA                   2.0000     1.0000  UG/L          4/13/90
  R                     A6964     79   7740                            1
 50S          R
        90.73901  JRB   C      TL          09999                1/11/90
 WA45     TMF     ETVAA      <            1.0000     0.0000  UG/L          4/13/90
  R                     A1794     36   7841                            1
 50S
        90.73901  JRB   C      TL          09999                1/11/90
 WA45     TMF     ETVAA      <            1.0000     0.0000  UG/L          4/13/90
  R                     A1794     36   7841                            1
 50S
        90.73901  JRB   C      BA          09999                1/11/90
 WA45     MCW     FAA                     2.9000     0.3000  MG/L          4/13/90
  R                     000219   120   7080                            1
 50S          R
        90.73901  JRB   C      BA          09999                1/11/90
 WA45     MCW     FAA                     3.0000     0.3000  MG/L          4/13/90
  R                     000219   120   7080                            1
 50S          R
```

```
REPORT  SAMPLE                                  REQUEST                 REQUEST    DUE
NUMBER   NUM     OWNER MATRIX  ANALYSIS          NUM       BATCH         DATE      DATE

        90.73902  JRB   C      SOLIDS           09999                   2/14/90
 WA45     TDF      GRAV                       28.2000     0.6000  %               2/21/90
  R                      A001775  31   0                                   1
50S
        90.73902  JRB   C      AM-241           09999                   2/14/90
 WA45     TDF      GELI                      390.0000    60.0000  NCI/G          2/21/90
  R                      S8207    121  0                                   1
50S
        90.73902  JRB   C      SE-75            09999                   2/14/90
 WA45     TDF      GELI                       23.0000     4.0000  NCI/G          2/21/90
  R                      S8207    121  0                                   1
50S
        90.73902  JRB   C      NB-95            09999                   2/14/90
 WA45     TDF      GELI                        1.8000     0.6000  NCI/G          2/21/90
  R                      S8207    121  0                                   1
50S
        90.73902  JRB   C      ZN-65            09999                   2/14/90
 WA45     TDF      GELI                        8.7000     1.7000  NCI/G          2/21/90
  R                      S8207    121  0                                   1
50S
        90.73902  JRB   C      ALPHA            09999                   2/14/90
 WA45     TDF      PC                          1.0000     0.0100  UCI/G          2/21/90
  R                      A5645     50  0                                   1
50S
        90.73902  JRB   C      PU-239           09999                   2/14/90
 WA45     TDF      RAS                       520.0000    60.0000  NCI/G          2/22/90
  R                      A6464    106  0                                   1
50S          R
        90.73902  JRB   C      PU-239           09999                   2/14/90
 WA45     TDF      RAS                       580.0000    60.0000  NCI/G          2/22/90
  R                      A6464    106  0                                   1
50S          R
        90.73902  JRB   C      PU-238           09999                   2/14/90
 WA45     TDF      RAS                        71.0000     9.0000  NCI/G          2/22/90
  R                      A6464    106  0                                   1
50S          R
        90.73902  JRB   C      PU-238           09999                   2/14/90
 WA45     TDF      RAS                        76.0000     9.0000  NCI/G          2/22/90
  R                      A6464    106  0                                   1
50S          R
        90.73902  JRB   C      U-235            09999                   2/14/90
 WA45     TDF      RAS        <               20.0000     0.0000  PCI/G          3/01/90
  R                      A6464    108  0                                   1
50S
        90.73902  JRB   C      U-235            09999                   2/14/90
 WA45     TDF      RAS                        60.0000    40.0000  PCI/G          3/01/90
  R                      A6464    108  0                                   1
50S          R
        90.73902  JRB   C      U-234            09999                   2/14/90
 WA45     TDF      RAS                       860.0000   120.0000  PCI/G          3/01/90
  R                      A6464    108  0                                   1
50S          R
        90.73902  JRB   C      U-234            09999                   2/14/90
 WA45     TDF      RAS                       890.0000   120.0000  PCI/G          3/01/90
  R                      A6464    108  0                                   1
50S          R
```

```
        90.73902  JRB   C      AS          09999                2/14/90
 WA45     TMF     ETVAA                   3.5000     2.0000  UG/L          4/13/90
  R                     A6964     79   7060                           1
 50S           R
        90.73902  JRB   C      AS          09999                2/14/90
 WA45     TMF     ETVAA                   3.7000     2.0000  UG/L          4/13/90
  R                     A6964     79   7060                           1
 50S
        90.73902  JRB   C      SE          09999                2/14/90
 WA45     TMF     ETVAA      <            1.0000     0.0000  UG/L          4/13/90
  R                     A6964     79   7740                           1
 50S
        90.73902  JRB   C      SE          09999                2/14/90
 WA45     TMF     ETVAA      <            1.0000     0.0000  UG/L          4/13/90
  R                     A6964     79   7740                           1
 50S
        90.73902  JRB   C      TL          09999                2/14/90
 WA45     TMF     ETVAA                   2.0000     1.0000  UG/L          4/13/90
  R                     A1794     36   7841                           1
 50S           R
        90.73902  JRB   C      TL          09999                2/14/90
 WA45     TMF     ETVAA                   2.5000     1.0000  UG/L          4/13/90
  R                     A1794     36   7841                           1
 50S           R
        90.73902  JRB   C      BA          09999                2/14/90
 WA45     MCW     FAA                     2.1000     0.2000  MG/L          4/13/90
  R                     000219   120   7080                           1
 50S           R
        90.73902  JRB   C      BA          09999                2/14/90
 WA45     MCW     FAA                     2.3000     0.2000  MG/L          4/13/90
  R                     000219   120   7080                           1
 50S           R
        90.73902  JRB   C      AG          09999                2/14/90
 WA45     MCW     FAA                    19.0000    10.0000  UG/L          4/13/90
  R                     A6465     29   7760                           1
 50S           R
        90.73902  JRB   C      AG          09999                2/14/90
 WA45     TMF     FAA                    19.0000    10.0000  UG/L          4/13/90
  R                     A6465     29   7760                           1
 50S           R
        90.73902  JRB   C      CD          09999                2/14/90
 WA45     MCW     FAA                    10.0000    10.0000  UG/L          4/13/90
  R                     A7235     24   7130                           1
 50S           R
        90.73902  JRB   C      CD          09999                2/14/90
 WA45     MCW     FAA                    11.0000    10.0000  UG/L          4/13/90
  R                     A7235     24   7130                           1
 50S           R
        90.73902  JRB   C      PB          09999                2/14/90
 WA45     MCW     FAA                    50.0000    50.0000  UG/L          4/13/90
  R                     A7235     24   7420                           1
 50S           R
        90.73902  JRB   C      PB          09999                2/14/90
 WA45     MCW     FAA        <           50.0000     0.0000  UG/L          4/13/90
  R                     A7235     24   7420                           1
 50S
        90.73902  JRB   C      NI          09999                2/14/90
 WA45     TMF     FAA                     0.3700     0.0400  MG/L          4/13/90
  R                     A000212   40   7520                           1
 50S           R
```

```
        90.73902  JRB   C      NI          09999                2/14/90
 WA45     TMF      FAA                    0.3600     0.0400  MG/L          4/13/90
  R                     A000212  40   7520                            1
 50S          R
        90.73902  JRB   C      CR          09999                2/14/90
 WA45     TMF      FAA        <           0.0400     0.0000  MG/L          4/13/90
  R                     A6465    30   7190                            1
 50S
        90.73902  JRB   C      CR          09999                2/14/90
 WA45     TMF      FAA        <           0.0400     0.0000  MG/L          4/13/90
  R                     A6465    30   7190                            1
 50S
        90.73902  JRB   C      HG          09999                2/14/90
 WA45     TMF      CVAA       <           0.2000     0.0000  UG/L          4/13/90
  R                     A6863    20   7480                            1
 50S
        90.73902  JRB   C      HG          09999                2/14/90
 WA45     TMF      CVAA       <           0.2000     0.0000  UG/L          4/13/90
  R                     A6863    20   7480                            1
 50S
```

41190.TXT

```
REPORT  SAMPLE                                REQUEST              REQUEST    DUE
NUMBER   NUM    OWNER MATRIX  ANALYSIS        NUM       BATCH      DATE      DATE

91890  90.73905  JRB   C      BA             09999                 4/11/90
 WA45     TMF     FAA        <             1.0000     0.0000  MG/L          9/14/90
  R                     000219    121  7080                                  1
50S
91890  90.73905  JRB   C      BA             09999                 4/11/90
 WA45     TMF     FAA        <             1.0000     0.0000  MG/L          9/14/90
  R                     000219    121  7080                                  1
50S
       90.73905  JRB   C      SOLIDS         09999                 4/11/90
 WA45     TDF     GRAV                    33.0000     0.7000  %             4/12/90
  R                     A001775   31   0                                     1
50S
       90.73905  JRB   C      ALPHA          09999                 4/11/90
 WA45     TDF     PC                     124.0000    12.0000  NCI/G         4/16/90
  R                     A06866    124  0                                     1
50S
       90.73905  JRB   C      U-235          09999                 4/11/90
 WA45     TDF     RAS        <            24.0000     0.0000  PCI/G         4/17/90
  R                     A6464     122  0                                     1
50S
       90.73905  JRB   C      U-235          09999                 4/11/90
 WA45     TDF     RAS                     29.0000    26.0000  PCI/G         4/17/90
  R                     A6464     123  0                                     1
50S          R
       90.73905  JRB   C      U-234          09999                 4/11/90
 WA45     TDF     RAS                    870.0000   116.0000  PCI/G         4/17/90
  R                     A6464     123  0                                     1
50S          R
       90.73905  JRB   C      U-234          09999                 4/11/90
 WA45     TDF     RAS                    760.0000   100.0000  PCI/G         4/17/90
  R                     A6464     122  0                                     1
50S          R
       90.73905  JRB   C      AM-241         09999                 4/11/90
 WA45     TDF     NAI                     47.0000     4.0000  NCI/G         4/17/90
  R                     A6464     123  0                                     1
50S
       90.73905  JRB   C      AM-241         09999                 4/11/90
 WA45     TDF     GELI                    41.0000     6.0000  NCI/G         4/17/90
  R                     S12459    27   0                                     1
50S
       90.73905  JRB   C      CS-137         09999                 4/11/90
 WA45     TDF     GELI                     4.9000     1.3000  NCI/G         4/17/90
  R                     S12459    27   0                                     1
50S
       90.73905  JRB   C      PU-238         09999                 4/11/90
 WA45     TDF     RAS                      9.5000     1.5000  NCI/G         4/17/90
  R                     A6464     123  0                                     1
50S          R
       90.73905  JRB   C      PU-238         09999                 4/11/90
 WA45     TDF     RAS                     10.7000     1.6000  NCI/G         4/17/90
  R                     A6464     123  0                                     1
50S          R
       90.73905  JRB   C      PU-239         09999                 4/11/90
 WA45     TDF     RAS                     70.0000     8.0000  NCI/G         4/17/90
  R                     A6464     123  0                                     1
50S          R
```

```
        90.73905  JRB   C     PU-239      09999                4/11/90
 WA45     TDF     RAS                   68.0000     8.0000  NCI/G        4/17/90
  R                     A6464     123  0                                 1
 50S          R
 8298   90.73905  JRB   C     AG          09999                4/11/90
 WA45     TMF     FAA                   16.0000    10.0000  UG/L         9/24/90
  R                     A6465     45   7760                              1
 50S          R
 8298   90.73905  JRB   C     AG          09999                4/11/90
 WA45     TMF     FAA                   17.0000    10.0000  UG/L         9/24/90
  R                     A6465     45   7760                              1
 50S          R
 8298   90.73905  JRB   C     AS          09999                4/11/90
 WA45     TMF     ETVAA                  2.0000     2.0000  UG/L         9/24/90
  R                     A6864     88   7060                              1
 50S          R
 8298   90.73905  JRB   C     AS          09999                4/11/90
 WA45     TMF     ETVAA                  2.0000     2.0000  UG/L         9/24/90
  R                     A6864     88   7060                              1
 50S          R
 8298   90.73905  JRB   C     SE          09999                4/11/90
 WA45     TMF     ETVAA     <            1.0000     0.0000  UG/L         9/24/90
  R                     A6864     88   7740                              1
 50S
 8298   90.73905  JRB   C     SE          09999                4/11/90
 WA45     TMF     ETVAA     <            1.0000     0.0000  UG/L         9/24/90
  R                     A6864     88   7740                              1
 50S
 8298   90.73905  JRB   C     CD          09999                4/11/90
 WA45     TMF     ETVAA                  8.6000     1.8000  UG/L         9/24/90
  R                     A7235     30   7130                              1
 50S          R
 8298   90.73905  JRB   C     CD          09999                4/11/90
 WA45     TMF     ETVAA                  8.7000     1.8000  UG/L         9/24/90
  R                     A7235     30   7130                              1
 50S          R
 8298   90.73905  JRB   C     PB          09999                4/11/90
 WA45     TMF     ETVAA                  4.8000     1.0000  UG/L         9/24/90
  R                     A7235     30   7420                              1
 50S
 8298   90.73905  JRB   C     TL          09999                4/11/90
 WA45     TMF     ETVAA                  2.2000     1.0000  UG/L         9/24/90
  R                     A1794     41   7841                              1
 50S          R
 8298   90.73905  JRB   C     TL          09999                4/11/90
 WA45     TMF     ETVAA                  1.2000     1.0000  UG/L         9/24/90
  R                     A1794     41   7841                              1
 50S          R
 8298   90.73905  JRB   C     TL          09999                4/11/90
 WA45     TMF     ETVAA                 50.0000    32.0000  UG/L         9/24/90
  R                     A1794     41   7841                              1
 50S          R
 8298   90.73905  JRB   C     HG          09999                4/11/90
 WA45     TMF     CVAA                   0.3500     0.2000  UG/L         9/24/90
  R                     A6863     25   7480                              1
 50S          R
 8298   90.73905  JRB   C     HG          09999                4/11/90
 WA45     TMF     CVAA                   0.3400     0.2000  UG/L         9/24/90
  R                     A6863     25   7480                              1
 50S          R
```

```
8553   90.73905  JRB   C     CR          09999                4/11/90
 WH51     TMF     FAA        <          0.0400     0.0000  MG/L        10/19/90
  R                     A6465     62   7190                           1
50S
8553   90.73905  JRB   C     CR          09999                4/11/90
 WH51     TMF     FAA        <          0.0400     0.0000  MG/L        10/19/90
  R                     A6465     62   7190                           1
50S
8553   90.73905  JRB   C     NI          09999                4/11/90
 WH51     TMF     FAA                   1.6000     0.2000  MG/L        10/19/90
  R                     A000212   43   7520                           1
50S          R
8553   90.73905  JRB   C     NI          09999                4/11/90
 WH51     TMF     FAA                   1.6000     0.2000  MG/L        10/19/90
  R                     A000212   43   7520                           1
50S          R
8810   90.73905  JRB   C     SE          09999                4/11/90
 WA45     TMF     ETVAA                 50.0000    39.0000  UG/L         9/24/90
  R                     A6864     88   7740                           1
50S
```

REPORT NUMBER	SAMPLE NUM	OWNER	MATRIX	ANALYSIS	REQUEST NUM	BATCH	REQUEST DATE	DUE DATE
91890	90.73906	JRB	C	ALPHA	09999		5/03/90	
WA45	TDF	PC			183.0000	18.0000	NCI/G	5/10/90
R			A06866	132	0		1	
50S								
91890	90.73906	JRB	C	AM-241	09999		5/03/90	
WA45	TDF	GELI			85.0000	13.0000	NCI/G	5/10/90
R			S12459	49	0		1	
50S								
91890	90.73906	JRB	C	U-234	09999		5/03/90	
WA45	TDF	RAS			570.0000	80.0000	PCI/G	5/16/90
R			A6464	131	0		1	
50S	R							
91890	90.73906	JRB	C	U-234	09999		5/03/90	
WA45	TDF	RAS			580.0000	90.0000	PCI/G	5/16/90
R			A6464	130	0		1	
50S	R							
91890	90.73906	JRB	C	U-235	09999		5/03/90	
WA45	TDF	RAS		<	24.0000	0.0000	PCI/G	5/16/90
R			A6464	130	0		1	
50S								
91890	90.73906	JRB	C	U-235	09999		5/03/90	
WA45	TDF	RAS		<	18.0000	0.0000	PCI/G	5/16/90
R			A6464	131	0		1	
50S								
91890	90.73906	JRB	C	PU-238	09999		5/03/90	
WA45	TDF	RAS			24.0000	3.0000	NCI/G	5/16/90
R			A6464	131	0		1	
50S	R							
91890	90.73906	JRB	C	PU-238	09999		5/03/90	
WA45	TDF	RAS			22.0000	3.0000	NCI/G	5/16/90
R			A6464	131	0		1	
50S	R							
91890	90.73906	JRB	C	PU-239	09999		5/03/90	
WA45	TDF	RAS			102.0000	12.0000	NCI/G	5/16/90
R			A6464	131	0		1	
50S	R							
91890	90.73906	JRB	C	PU-239	09999		5/03/90	
WA45	TDF	RAS			92.0000	10.0000	NCI/G	5/16/90
R			A6464	131	0		1	
50S	R							
91890	90.73906	JRB	C	BA	09999		5/03/90	
WA45	TMF	FAA		<	1.0000	0.0000	MG/L	9/14/90
R			000219	121	7080		1	
50S								
91890	90.73906	JRB	C	BA	09999		5/03/90	
WA45	TMF	FAA		<	1.0000	0.0000	MG/L	9/14/90
R			000219	121	7080		1	
50S								
	90.73906	JRB	C	SOLIDS	09999		5/03/90	
WA45	TDF	GRAV			33.4000	0.7000	%	5/10/90
R			A001775	33	0		1	
50S								
8298	90.73906	JRB	C	AG	09999		5/10/90	
WA45	TMF	FAA			19.0000	10.0000	UG/L	9/24/90
R			A6465	45	7760		1	
50S	R							

```
8298   90.73906  JRB   C     AG          09999                5/10/90
 WA45     TMF     FAA                  19.0000    10.0000  UG/L          9/24/90
  R                    A6465    45   7760                          1
50S           R
8298   90.73906  JRB   C     AS          09999                5/10/90
 WA45     TMF     ETVAA                 5.8000     2.0000  UG/L          9/24/90
  R                    A6864    88   7060                          1
50S           R
8298   90.73906  JRB   C     AS          09999                5/10/90
 WA45     TMF     ETVAA                 6.1000     2.0000  UG/L          9/24/90
  R                    A6864    88   7060                          1
50S           R
8298   90.73906  JRB   C     SE          09999                5/10/90
 WA45     TMF     ETVAA     <           1.0000     0.0000  UG/L          9/24/90
  R                    A6864    88   7740                          1
50S
8298   90.73906  JRB   C     SE          09999                5/10/90
 WA45     TMF     ETVAA     <           1.0000     0.0000  UG/L          9/24/90
  R                    A6864    88   7740                          1
50S
8298   90.73906  JRB   C     CD          09999                5/10/90
 WA45     TMF     ETVAA                 0.3900     0.1000  UG/L          9/24/90
  R                    A7235    30   7130                          1
50S           R
8298   90.73906  JRB   C     CD          09999                5/10/90
 WA45     TMF     ETVAA                 0.3700     0.1000  UG/L          9/24/90
  R                    A7235    30   7130                          1
50S           R
8298   90.73906  JRB   C     PB          09999                5/10/90
 WA45     TMF     ETVAA                 1.5000     1.0000  UG/L          9/24/90
  R                    A7235    30   7420                          1
50S           R
8298   90.73906  JRB   C     PB          09999                5/10/90
 WA45     TMF     ETVAA                 1.3000     1.0000  UG/L          9/24/90
  R                    A7235    30   7420                          1
50S           R
8298   90.73906  JRB   C     TL          09999                5/10/90
 WA45     TMF     ETVAA                 3.4000     1.0000  UG/L          9/24/90
  R                    A1794    41   7841                          1
50S           R
8298   90.73906  JRB   C     TL          09999                5/10/90
 WA45     TMF     ETVAA                 2.6000     1.0000  UG/L          9/24/90
  R                    A1794    41   7841                          1
50S           R
8298   90.73906  JRB   C     HG          09999                5/10/90
 WA45     TMF     CVAA                  0.4600     0.2000  UG/L          9/24/90
  R                    A6863    25   7480                          1
50S           R
8298   90.73906  JRB   C     HG          09999                5/10/90
 WA45     TMF     CVAA                  0.4300     0.2000  UG/L          9/24/90
  R                    A6863    25   7480                          1
50S           R
8553   90.73906  JRB   C     CR          09999                5/10/90
 WH51     TMF     FAA       <           0.0400     0.0000  MG/L         10/19/90
  R                    A6465    62   7190                          1
50S
8553   90.73906  JRB   C     CR          09999                5/10/90
 WH51     TMF     FAA       <           0.0400     0.0000  MG/L         10/19/90
  R                    A6465    62   7190                          1
50S
```

```
8553   90.73906  JRB   C     NI          09999                5/10/90
 WH51     TMF     FAA                   0.1200     0.0400  MG/L        10/19/90
  R                    A000212  43   7520                        1
50S           R
8553   90.73906  JRB   C     NI          09999                5/10/90
 WH51     TMF     FAA                   0.1200     0.0400  MG/L        10/19/90
  R                    A000212  43   7520                        1
50S           R
```

REPORT NUMBER	SAMPLE NUM	OWNER	MATRIX	ANALYSIS	REQUEST NUM	BATCH	REQUEST DATE	DUE DATE
91890	90.73907	JRB	C	AM-241	09999		6/21/90	
WA45	TDF	GELI			14.0000	2.0000	NCI/G	6/26/90
R			S12459	85	0		1	
50S								
91890	90.73907	JRB	C	PU-238	09999		6/21/90	
WA45	TDF	RAS			46.0000	6.0000	NCI/G	6/28/90
R			A6464	143	0		1	
50S	R							
91890	90.73907	JRB	C	PU-238	09999		6/21/90	
WA45	TDF	RAS			44.0000	5.0000	NCI/G	6/28/90
R			A6464	143	0		1	
50S	R							
91890	90.73907	JRB	C	PU-239	09999		6/21/90	
WA45	TDF	RAS			18.0000	2.0000	NCI/G	6/28/90
R			A6464	143	0		1	
50S	R							
91890	90.73907	JRB	C	PU-239	09999		6/21/90	
WA45	TDF	RAS			18.0000	2.0000	NCI/G	6/28/90
R			A6464	143	0		1	
50S	R							
91890	90.73907	JRB	C	U-235	09999		6/21/90	
WA45	TDF	RAS		<	15.0000	0.0000	PCI/G	6/28/90
R			A6464	144	0		1	
50S								
91890	90.73907	JRB	C	U-235	09999		6/21/90	
WA45	TDF	RAS		<	11.0000	0.0000	PCI/G	6/28/90
R			A6464	144	0		1	
50S								
91890	90.73907	JRB	C	U-234	09999		6/21/90	
WA45	TDF	RAS			150.0000	30.0000	PCI/G	6/28/90
R			A6464	144	0		1	
50S	R							
91890	90.73907	JRB	C	U-234	09999		6/21/90	
WA45	TDF	RAS			110.0000	30.0000	PCI/G	6/28/90
R			A6464	144	0		1	
50S	R							
91890	90.73907	JRB	C	BA	09999		6/21/90	
WA45	TMF	FAA			1.9000	1.0000	MG/L	9/14/90
R			000219	121	7080		1	
50S	R							
91890	90.73907	JRB	C	BA	09999		6/21/90	
WA45	TMF	FAA			1.9000	1.0000	MG/L	9/14/90
R			000219	121	7080		1	
50S	R							
91890	90.73907	JRB	C	CD	09999		6/21/90	
WA45	TMF	FAA		<	10.0000	0.0000	UG/L	9/14/90
R			A7235	34	7130		1	
50S								
91890	90.73907	JRB	C	CD	09999		6/21/90	
WA45	TMF	FAA		<	10.0000	0.0000	UG/L	9/14/90
R			A7235	34	7130		1	
50S								
91890	90.73907	JRB	C	PB	09999		6/21/90	
WA45	TMF	FAA			0.1800	0.0200	MG/L	9/14/90
R			A7235	34	7420		1	
50S	R							

```
91890  90.73907  JRB   C     PB          09999              6/21/90
 WA45     TMF     FAA                   0.1900     0.0200  MG/L          9/14/90
  R                     A7235     34   7420                          1
50S           R
91890  90.73907  JRB   C     NI          09999              6/21/90
 WA45     TMF     FAA                   0.0900     0.0400  MG/L          9/14/90
  R                     000212    42   7520                          1
50S           R
91890  90.73907  JRB   C     NI          09999              6/21/90
 WA45     TMF     FAA                   0.0980     0.0400  MG/L          9/14/90
  R                     000212    42   7520                          1
50S           R
91890  90.73907  JRB   C     AG          09999              6/21/90
 WA45     TMF     FAA                   0.0240     0.0100  MG/L          9/14/90
  R                     A6465     56   7760                          1
50S           R
91890  90.73907  JRB   C     AG          09999              6/21/90
 WA45     TMF     FAA                   0.0230     0.0100  MG/L          9/14/90
  R                     A6465     56   7760                          1
50S           R
91890  90.73907  JRB   C     CR          09999              6/21/90
 WA45     TMF     FAA                   0.0770     0.0400  MG/L          9/14/90
  R                     A6465     55   7760                          1
50S           R
91890  90.73907  JRB   C     CR          09999              6/21/90
 WA45     TMF     FAA                   0.0790     0.0400  MG/L          9/14/90
  R                     A6465     55   7190                          1
50S           R
91890  90.73907  JRB   C     AS          09999              6/21/90
 WA45     TMF     ETVAA                 2.0000     2.0000  UG/L          9/14/90
  R                     A6864     99   7060                          1
50S           R
91890  90.73907  JRB   C     AS          09999              6/21/90
 WA45     TMF     ETVAA      <          2.0000     0.0000  UG/L          9/14/90
  R                     A6864     99   7060                          1
50S
91890  90.73907  JRB   C     SE          09999              6/21/90
 WA45     TMF     ETVAA      <          1.0000     0.0000  UG/L          9/14/90
  R                     A6864     99   7740                          1
50S
91890  90.73907  JRB   C     SE          09999              6/21/90
 WA45     TMF     ETVAA      <          1.0000     0.0000  UG/L          9/14/90
  R                     A6864     99   7740                          1
50S
       90.73907  JRB   C     SOLIDS      09999              6/21/90
 WA45     TDF     GRAV                 32.4000     0.2000  %             6/22/90
  R                     A001775   32   0                             1
50S
       90.73907  JRB   C     ALPHA       09999              6/21/90
 WA45     TDF     PC                   70.0000     7.0000  NCI/G         6/22/90
  R                     A06866   144   0                             1
50S
       90.73907  JRB   C     CO-60       09999              6/21/90
 WA45     TDF     GELI                  1.0000     0.5000  NCI/G         6/26/90
  R                     S12459    85   0                             1
50S
8298   90.73907  JRB   C     HG          09999              6/21/90
 WA45     TMF     CVAA       <          0.2000     0.0000  UG/L          9/24/90
  R                     A6863     36   7480                          1
50S
```

```
8298   90.73907  JRB   C     HG          09999              6/21/90
 WA45     TMF     CVAA      <          0.2000     0.0000  UG/L          9/24/90
  R                     A6863    36   7480                           1
50S
8298   90.73907  JRB   C     TL          09999              6/21/90
 WA45     TMF     ETVAA     <          1.0000     0.0000  UG/L          9/24/90
  R                     A1794    48   7841                           1
50S
```

8/15/90.7x7

REPORT NUMBER	SAMPLE NUM	OWNER	MATRIX	ANALYSIS	REQUEST NUM	BATCH	REQUEST DATE	DUE DATE
	90.73908	JRB	C	SOLIDS	09999		8/15/90	
WA45	TDF	GRAV			31.0000	0.6000	%	8/16/90
R			A001775	34	0		1	
50S								
	90.73908	JRB	C	ALPHA	09999		8/15/90	
WA45	TDF	PC			140.0000	14.0000	NCI/G	8/21/90
R			A09286	8	0		1	
50S								
	90.73908	JRB	C	AM-241	09999		8/15/90	
WA45	TDF	GELI			14.0000	2.0000	NCI/G	8/21/90
R			S12459	146	0		1	
50S								
	90.73908	JRB	C	CO-57	09999		8/15/90	
WA45	TDF	GELI			990.0000	590.0000	PCI/G	8/21/90
R			S12459	146	0		1	
50S								
	90.73908	JRB	C	CO-60	09999		8/15/90	
WA45	TDF	GELI			1.2000	0.5000	NCI/G	8/21/90
R			S12459	146	0		1	
50S								
	90.73908	JRB	C	MN-54	09999		8/15/90	
WA45	TDF	GELI			730.0000	500.0000	PCI/G	8/21/90
R			S12459	146	0		1	
50S								
	90.73908	JRB	C	SR-85	09999		8/15/90	
WA45	TDF	GELI			4.1000	0.7000	NCI/G	8/21/90
R			S12459	146	0		1	
50S								
	90.73908	JRB	C	SE-75	09999		8/15/90	
WA45	TDF	GELI			2.1000	0.8000	NCI/G	8/21/90
R			S12459	146	0		1	
50S								
	90.73908	JRB	C	PU-239	09999		8/15/90	
WA45	TDF	RAS			63.0000	7.0000	NCI/G	8/23/90
R			A09309	3	0		1	
50S	R							
	90.73908	JRB	C	PU-239	09999		8/15/90	
WA45	TDF	RAS			68.0000	8.0000	NCI/G	8/23/90
R			A09309	3	0		1	
50S	R							
	90.73908	JRB	C	PU-238	09999		8/15/90	
WA45	TDF	RAS			81.0000	9.0000	NCI/G	8/23/90
R			A09309	3	0		1	
50S	R							
	90.73908	JRB	C	PU-238	09999		8/15/90	
WA45	TDF	RAS			88.0000	10.0000	NCI/G	8/23/90
R			A09309	3	0		1	
50S	R							
	90.73908	JRB	C	U-235	09999		8/15/90	
WA45	TDF	RAS		<	30.0000	0.0000	PCI/G	8/24/90
R			A09309	4	0		1	
50S								
	90.73908	JRB	C	U-235	09999		8/15/90	
WA45	TDF	RAS		<	20.0000	0.0000	PCI/G	8/24/90
R			A09309	4	0		1	
50S								

```
        90.73908  JRB   C     U-234       09999                8/15/90
 WA45     TDF     RAS                  240.0000    50.0000  PCI/G        8/24/90
  R                     A09309   4     0                                1
 50S           R
        90.73908  JRB   C     U-234       09999                8/15/90
 WA45     TDF     RAS                  165.0000    40.0000  PCI/G        8/24/90
  R                     A09309   4     0                                1
 50S           R
 8298   90.73908  JRB   C     HG          09999                8/15/90
 WA45     TMF     CVAA      <            0.2000     0.0000  UG/L         9/24/90
  R                     A6863    36    7480                             1
 50S
 8298   90.73908  JRB   C     HG          09999                8/15/90
 WA45     TMF     CVAA      <            0.2000     0.0000  UG/L         9/24/90
  R                     A6863    36    7480                             1
 50S
 8298   90.73908  JRB   C     AS          09999                8/15/90
 WA45     TMF     ETVAA                   2.4000     2.0000  UG/L         9/26/90
  R                     A6864    102   7060                             1
 50S           R
 8298   90.73908  JRB   C     AS          09999                8/15/90
 WA45     TMF     ETVAA                   3.8000     2.0000  UG/L         9/26/90
  R                     A6864    102   7060                             1
 50S           R
 8298   90.73908  JRB   C     SE          09999                8/15/90
 WA45     TMF     ETVAA                   8.7000     1.8000  UG/L         9/26/90
  R                     A6864    102   7740                             1
 50S           R
 8298   90.73908  JRB   C     SE          09999                8/15/90
 WA45     TMF     ETVAA                   8.6000     1.8000  UG/L         9/26/90
  R                     A6864    102   7740                             1
 50S           R
 9148   90.73908  JRB   C     CR          09999   MCW112890    8/15/90
 WH51     MCW     ICPMS     <           100.0000     0.0000  UG/L        11/30/90
  R                     A6462    91    6020                             1
 50S
 9148   90.73908  JRB   C     NI          09999   MCW112890    8/15/90
 WH51     MCW     ICPMS               110.0000    11.0000  UG/L        11/30/90
  R                     A6462    91    6020                             1
 50S
 9148   90.73908  JRB   C     NI          09999   MCW112890    8/15/90
 WH51     MCW     ICPMS               111.0000    11.0000  UG/L        11/30/90
  R                     A6462    91    6020                             1
 50S
 9148   90.73908  JRB   C     CD          09999   MCW112890    8/15/90
 WH51     MCW     ICPMS                   1.9000     1.0000  UG/L        11/30/90
  R                     A6462    91    6020                             1
 50S
 9148   90.73908  JRB   C     CD          09999   MCW112890    8/15/90
 WH51     MCW     ICPMS                   2.2000     1.0000  UG/L        11/30/90
  R                     A6462    91    6020                             1
 50S
 9148   90.73908  JRB   C     BA          09999   MCW112890    8/15/90
 WH51     MCW     ICPMS               342.0000    34.0000  UG/L        11/30/90
  R                     A6462    91    6020                             1
 50S
 9148   90.73908  JRB   C     BA          09999   MCW112890    8/15/90
 WH51     MCW     ICPMS               338.0000    34.0000  UG/L        11/30/90
  R                     A6462    91    6020                             1
 50S
```

```
9148   90.73908  JRB   C     TL          09999  MCW112890    8/15/90
 WH51     MCW     ICPMS                 4.9000     1.0000  UG/L        11/30/90
  R                    A6462    91   6020                            1
50S
9148   90.73908  JRB   C     TL          09999  MCW112890    8/15/90
 WH51     MCW     ICPMS                 4.9000     1.0000  UG/L        11/30/90
  R                    A6462    91   6020                            1
50S
9148   90.73908  JRB   C     PB          09999  MCW112890    8/15/90
 WH51     MCW     ICPMS                21.0000     2.0000  UG/L        11/30/90
  R                    A6462    91   6020                            1
50S
9148   90.73908  JRB   C     PB          09999  MCW112890    8/15/90
 WH51     MCW     ICPMS                21.0000     2.0000  UG/L        11/30/90
  R                    A6462    91   6020                            1
50S
```

REPORT NUMBER	SAMPLE NUM	OWNER	MATRIX	ANALYSIS	REQUEST NUM	BATCH	REQUEST DATE	DUE DATE
8553	90.73910	JRB	C	ALPHA	09999		10/12/90	
WH51	TDF	PC			74.0000	7.0000	NCI/G	10/16/90
R			A09286	20	0		1	
50S								
8553	90.73910	JRB	C	SOLIDS	09999		10/12/90	
WH51	TDF	GRAV			31.8000	0.7000	%	10/16/90
R			A001775	34	0		1	
50S								
8553	90.73910	JRB	C	AM-241	09999		10/12/90	
WH51	TDF	GELI			8.5000	1.4000	NCI/G	10/16/90
R			A09284	48	0		1	
50S								
8553	90.73910	JRB	C	CO-58	09999		10/12/90	
WH51	TDF	GELI			2.5000	0.7000	NCI/G	10/16/90
R			A09284	48	0		1	
50S								
8553	90.73910	JRB	C	CO-56	09999		10/12/90	
WH51	TDF	GELI			1.0000	0.4000	NCI/G	10/16/90
R			A09284	48	0		1	
50S								
8553	90.73910	JRB	C	BE-7	09999		10/12/90	
WH51	TDF	GELI			14.0000	5.0000	NCI/G	10/16/90
R			A09284	48	0		1	
50S								
8553	90.73910	JRB	C	MN-54	09999		10/12/90	
WH51	TDF	GELI			1.3000	0.5000	NCI/G	10/16/90
R			A09284	48	0		1	
50S								
8553	90.73910	JRB	C	SE-75	09999		10/12/90	
WH51	TDF	GELI			1.7000	0.8000	NCI/G	10/16/90
R			A09284	48	0		1	
50S								
8553	90.73910	JRB	C	NB-95	09999		10/12/90	
WH51	TDF	GELI			3.1000	0.6000	NCI/G	10/16/90
R			A09284	48	0		1	
50S								
8553	90.73910	JRB	C	Y-88	09999		10/12/90	
WH51	TDF	GELI			22.0000	3.0000	NCI/G	10/16/90
R			A09284	48	0		1	
50S								
8553	90.73910	JRB	C	ZN-65	09999		10/12/90	
WH51	TDF	GELI			3.4000	1.5000	NCI/G	10/16/90
R			A09284	48	0		1	
50S								
8553	90.73910	JRB	C	ZR-88	09999		10/12/90	
WH51	TDF	GELI			13.0000	2.0000	NCI/G	10/16/90
R			A09284	48	0		1	
50S								
8553	90.73910	JRB	C	SR-85	09999		10/12/90	
WH51	TDF	GELI			31.0000	5.0000	NCI/G	10/16/90
R			A09284	48	0		1	
50S								
8553	90.73910	JRB	C	SR-82	09999		10/12/90	
WH51	TDF	GELI			970.0000	590.0000	PCI/G	10/16/90
R			A09284	48	0		1	
50S								

```
8553   90.73910  JRB   C      PU-239      09999              10/12/90
 WH51     TDF     RAS                   34.0000     4.0000  NCI/G       10/19/90
  R                     A09309    12    0                                1
50S           R
8553   90.73910  JRB   C      PU-239      09999              10/12/90
 WH51     TDF     RAS                   36.0000     4.0000  NCI/G       10/19/90
  R                     A09309    12    0                                1
50S           R
8553   90.73910  JRB   C      PU-238      09999              10/12/90
 WH51     TDF     RAS                   24.0000     3.0000  NCI/G       10/19/90
  R                     A09309    12    0                                1
50S           R
8553   90.73910  JRB   C      PU-238      09999              10/12/90
 WH51     TDF     RAS                   25.0000     3.0000  NCI/G       10/19/90
  R                     A09309    12    0                                1
50S           R
8553   90.73910  JRB   C      U-235       09999              10/12/90
 WH51     TDF     RAS                   20.0000    20.0000  PCI/G       10/19/90
  R                     A09309    13    0                                1
50S           R
8553   90.73910  JRB   C      U-235       09999              10/12/90
 WH51     TDF     RAS        <          20.0000     0.0000  PCI/G       10/19/90
  R                     A09309    14    0                                1
50S
8553   90.73910  JRB   C      U-234       09999              10/12/90
 WH51     TDF     RAS                  280.0000    50.0000  PCI/G       10/19/90
  R                     A09309    14    0                                1
50S           R
8553   90.73910  JRB   C      U-234       09999              10/12/90
 WH51     TDF     RAS                  270.0000    50.0000  PCI/G       10/19/90
  R                     A09309    13    0                                1
50S           R
8810   90.73910  JRB   WW     HG          09999              10/12/90
 WH51     MAB     CVAA       <           0.2000     0.0000  UG/L        11/01/90
  R                     17764     61                                     1
50S
8810   90.73910  JRB   WW     HG          09999              10/12/90
 WH51     MAB     CVAA       <           0.2000     0.0000  UG/L        11/01/90
  R                     17764     61                                     1
50S
8810   90.73910  JRB   C      AS          09999              10/12/90
 WH51     TMF     ETVAA      <           2.0000     0.0000  UG/L        11/05/90
  R                     A6864     107   7060                             1
50S
8810   90.73910  JRB   C      SE          09999              10/12/90
 WH51     TMF     ETVAA                  5.2000     1.0000  UG/L        11/05/90
  R                     A6864     107   7740                             1
50S
9376   90.73910  JRB   WW     CR          09999              10/12/90
 WH51     MCW     ICPMS      <          10.0000     0.0000  UG/L        12/19/90
  R                     A6462        91   6020                             1
50S
9376   90.73910  JRB   WW     CR          09999              10/12/90
 WH51     MCW     ICPMS      <          10.0000     0.0000  UG/L        12/19/90
  R                     A6462        91   6020                             1
50S
9376   90.73910  JRB   WW     NI          09999              10/12/90
 WH51     MCW     ICPMS                  4.8000     0.5000  MG/L        12/19/90
  R                     A6462        91   6020                             1
50S
```

```
9376   90.73910  JRB   WW    NI          09999              10/12/90
 WH51     MCW     ICPMS                 4.8000     0.5000  MG/L        12/19/90
  R                    A6462        91   6020                           1
50S
9376   90.73910  JRB   WW    CD          09999              10/12/90
 WH51     MCW     ICPMS                83.0000     8.0000  UG/L        12/19/90
  R                    A6462        91   6020                           1
50S
9376   90.73910  JRB   WW    CD          09999              10/12/90
 WH51     MCW     ICPMS                84.0000     8.0000  UG/L        12/19/90
  R                    A6462        91   6020                           1
50S
9376   90.73910  JRB   WW    AG          09999              10/12/90
 WH51     MCW     ICPMS     <          10.0000     0.0000  UG/L        12/19/90
  R                    A6462        91   6020                           1
50S
9376   90.73910  JRB   WW    AG          09999              10/12/90
 WH51     MCW     ICPMS     <          10.0000     0.0000  UG/L        12/19/90
  R                    A6462        91   6020                           1
50S
9376   90.73910  JRB   WW    BA          09999              10/12/90
 WH51     MCW     ICPMS               552.0000    55.0000  UG/L        12/19/90
  R                    A6462        91   6020                           1
50S
9376   90.73910  JRB   WW    BA          09999              10/12/90
 WH51     MCW     ICPMS               552.0000    55.0000  UG/L        12/19/90
  R                    A6462        91   6020                           1
50S
9376   90.73910  JRB   WW    TL          09999              10/12/90
 WH51     MCW     ICPMS     <          10.0000     0.0000  UG/L        12/19/90
  R                    A6462        91   6020                           1
50S
9376   90.73910  JRB   WW    PB          09999              10/12/90
 WH51     MCW     ICPMS                34.0000    10.0000  UG/L        12/19/90
  R                    A6462        91   6020                           1
50S
9376   90.73910  JRB   WW    PB          09999              10/12/90
 WH51     MCW     ICPMS                33.0000    10.0000  UG/L        12/19/90
  R                    A6462        91   6020                           1
50S
```

120590.TXT

REPORT NUMBER	SAMPLE NUM	OWNER	MATRIX	ANALYSIS	REQUEST NUM	BATCH	REQUEST DATE	DUE DATE
9148	90.73911	JRB	C	SOLIDS	09999		12/05/90	
WH51	TDF	GRAV			26.8000	0.6000	%	12/11/90
R			A001775	34	0		1	
50S								
9148	90.73911	JRB	C	ALPHA	09999		12/05/90	
WH51	TDF	PC			83.0000	8.0000	NCI/G	12/11/90
R			A09286	32	WR150		1	
50S								
9148	90.73911	JRB	C	AM-241	09999		12/05/90	
WH51	TDF	GELI			16.0000	2.0000	NCI/G	12/11/90
R			A09284	101	WR100		1	
50S								
9148	90.73911	JRB	C	CO-57	09999		12/05/90	
WH51	TDF	GELI			1.6000	0.6000	NCI/G	12/11/90
R			A09284	101	WR140		1	
50S								
9148	90.73911	JRB	C	CO-58	09999		12/05/90	
WH51	TDF	GELI			1.3000	0.4000	NCI/G	12/11/90
R			A09284	101	WR140		1	
50S								
9148	90.73911	JRB	C	MN-54	09999		12/05/90	
WH51	TDF	GELI			1.0000	0.6000	NCI/G	12/11/90
R			A09284	101	WR140		1	
50S								
9148	90.73911	JRB	C	SR-85	09999		12/05/90	
WH51	TDF	GELI			19.0000	3.0000	NCI/G	12/11/90
R			A09284	101	WR140		1	
50S								
9148	90.73911	JRB	C	SE-75	09999		12/05/90	
WH51	TDF	GELI			5.4000	0.9000	NCI/G	12/11/90
R			A09284	101	WR140		1	
50S								
9148	90.73911	JRB	C	NB-95	09999		12/05/90	
WH51	TDF	GELI			4.2000	0.7000	NCI/G	12/11/90
R			A09284	101	WR140		1	
50S								
9148	90.73911	JRB	C	Y-88	09999		12/05/90	
WH51	TDF	GELI			41.0000	6.0000	NCI/G	12/11/90
R			A09284	101	WR140		1	
50S								
9148	90.73911	JRB	C	ZR-88	09999		12/05/90	
WH51	TDF	GELI			13.0000	2.0000	NCI/G	12/11/90
R			A09284	101	WR140		1	
50S								
9148	90.73911	JRB	C	U-235	09999		12/05/90	
WH51	TDF	RAS		<	30.0000	0.0000	PCI/G	12/13/90
R			A09309	21	WR180		1	
50S								
9148	90.73911	JRB	C	U-235	09999		12/05/90	
WH51	TDF	RAS		<	40.0000	0.0000	PCI/G	12/13/90
R			A09309	21	WR180		1	
50S								
9148	90.73911	JRB	C	U-234	09999		12/05/90	
WH51	TDF	RAS		<	180.0000	0.0000	PCI/G	12/13/90
R			A09309	21	WR180		1	
50S								

```
9148   90.73911  JRB   C     U-234       09999              12/05/90
 WH51     TDF     RAS        <         180.0000     0.0000  PCI/G       12/13/90
  R                     A09309   21   WR180                          1
50S
9148   90.73911  JRB   C     PU-239      09999              12/05/90
 WH51     TDF     RAS                   28.0000     4.0000  NCI/G       12/13/90
  R                     A09309   22   WR180                          1
50S          R
9148   90.73911  JRB   C     PU-239      09999              12/05/90
 WH51     TDF     RAS                   27.0000     4.0000  NCI/G       12/13/90
  R                     A09309   22   WR180                          1
50S          R
9148   90.73911  JRB   C     PU-238      09999              12/05/90
 WH51     TDF     RAS                   41.0000     5.0000  NCI/G       12/13/90
  R                     A09309   22   WR180                          1
50S          R
9148   90.73911  JRB   C     PU-238      09999              12/05/90
 WH51     TDF     RAS                   49.0000     6.0000  NCI/G       12/13/90
  R                     A09309   22   WR180                          1
50S          R
9148   90.73911  JRB   C     HG          09999              12/05/90
 WH51     MAB     CVAA       <           0.2000     0.0000  UG/L        12/13/90
  R                     A6863    42                                    1
50S
```

```
REPORT  SAMPLE                          REQUEST            REQUEST    DUE
NUMBER   NUM    OWNER MATRIX  ANALYSIS   NUM      BATCH     DATE      DATE

9376   90.73911  JRB   SE    CR          09999              12/05/90
 WH51     MCW     ICPMS      <          10.0000     0.0000  UG/L        1/18/91
  R                     A6462    92   6020                           1
50S
9376   90.73911  JRB   SE    CR          09999              12/05/90
 WH51     MCW     ICPMS      <          10.0000     0.0000  UG/L        1/18/91
  R                     A6462    92   6020                           1
50S
9376   90.73911  JRB   SE    NI          09999              12/05/90
 WH51     MCW     ICPMS                1485.0000   149.0000  UG/L        1/18/91
  R                     A6462    92   6020                           1
50S
9376   90.73911  JRB   SE    NI          09999              12/05/90
 WH51     MCW     ICPMS      R         1601.0000   160.0000  UG/L        1/18/91
  R                     A6462    92   6020                           1
50S
9376   90.73911  JRB   SE    AG          09999              12/05/90
 WH51     MCW     ICPMS      <          10.0000     0.0000  UG/L        1/18/91
  R                     A6462    92   6020                           1
50S
9376   90.73911  JRB   SE    AG          09999              12/05/90
 WH51     MCW     ICPMS      <          10.0000     0.0000  UG/L        1/18/91
  R                     A6462    92   6020                           1
50S
9376   90.73911  JRB   SE    CD          09999              12/05/90
 WH51     MCW     ICPMS                  62.0000     6.0000  UG/L        1/18/91
  R                     A6462    92   6020                           1
50S
9376   90.73911  JRB   SE    CD          09999              12/05/90
 WH51     MCW     ICPMS      R          77.0000     8.0000  UG/L        1/18/91
  R                     A6462    92   6020                           1
50S
```

```
9376   90.73911  JRB   SE    BA          09999              12/05/90
 WH51    MCW     ICPMS              100.0000    10.0000  UG/L          1/18/91
  R                    A6462    92   6020                           1
50S
9376   90.73911  JRB   SE    BA          09999              12/05/90
 WH51    MCW     ICPMS     R        109.0000    11.0000  UG/L          1/18/91
  R                    A6462    92   6020                           1
50S
9376   90.73911  JRB   SE    TL          09999              12/05/90
 WH51    MCW     ICPMS     <         10.0000     0.0000  UG/L          1/18/91
  R                    A6462    92   6020                           1
50S
9376   90.73911  JRB   SE    TL          09999              12/05/90
 WH51    MCW     ICPMS     <         10.0000     0.0000  UG/L          1/18/91
  R                    A6462    92   6020                           1
50S
9376   90.73911  JRB   SE    PB          09999              12/05/90
 WH51    MCW     ICPMS              11.0000     1.0000  UG/L          1/18/91
  R                    A6462    92   6020                           1
50S
9553   90.73911  JRB   C     SE          09999              12/05/90
 WH51    MAB     ETVAA     <          1.0000     0.0000  UG/L          1/30/91
  R                    A6864    118  270.2                           1
50S          R
9553   90.73911  JRB   C     SE          09999              12/05/90
 WH51    MAB     ETVAA     <          1.0000     0.0000  UG/L          1/30/91
  R                    A6864    118  270.2                           1
50S          R
9553   90.73911  JRB   C     AS          09999              12/05/90
 WH51    MAB     ETVAA     <          2.0000     0.0000  UG/L          1/30/91
  R                    A6864    118  206.2                           1
50S          R
9553   90.73911  JRB   C     AS          09999              12/05/90
 WH51    MAB     ETVAA     <          2.0000     0.0000  UG/L          1/30/91
  R                    A6864    118  206.2                           1
50S          R
```

APPENDIX IV

R.M. Parsons Report

LA-UR-

94-1402

Title:

Study of Alternatives for Radioactive Wastewater Treatment Sludges at the Los Alamos National Laboratory

Author(s):

Ralph M. Parsons Company
for
William S. Midkiff

Submitted to:

The Public Affairs Office

Los Alamos
NATIONAL LABORATORY

Los Alamos National Laboratory, an affirmative action/equal opportunity employer, is operated by the University of California for the U.S. Department of Energy under contract W-7405-ENG-36. By acceptance of this article, the publisher recognizes that the U.S. Government retains a nonexclusive, royalty-free license to publish or reproduce the published form of this contribution, or to allow others to do so, for U.S. Government purposes. The Los Alamos National Laboratory requests that the publisher identify this article as work performed under the auspices of the U.S. Department of Energy.

Form No. 836 R5
ST 2629 10/91

STUDY OF ALTERNATIVES FOR RADIOACTIVE WASTEWATER TREATMENT SLUDGES

at the

LOS ALAMOS NATIONAL LABORATORY

Prepared by
Ralph M. Parsons Company
100 West Walnut
Pasadena, California 91109

William S. Midkiff — 4/1/94
Los Alamos National Laboratory — Date
William S. Midkiff, Project Manager

Guy W. Lussiez — 4/1/94
Los Alamos National Laboratory — Date
Guy W. Lussiez, Section Leader, Process Design

Steven W. Hanson — 4.1.94
Los Alamos National Laboratory — Date
Steven W. Hanson, Section Leader, Wastewater Treatment

4/1/94
Los Alamos National Laboratory — Date
Anthony F. Drypolcher, Group Leader, Waste Management

TABLE OF CONTENTS

SECTION	PAGE
Executive Summary	i
1.0 Background and Introduction	1-1
1.1 Routine Radioactive Liquid Waste Collection and Treatment	1-1
1.2 Suspected Mixed Waste from the RLWTP	1-1
1.3 Objectives and Strategy of Study	1-5
2.0 Phase 1 - Analysis of Analytical Data to Justify Relabeling the RLWTP Sludge	2-1
2.1 Review of Historical Data	2-1
2.1.1 Sampling Locations and Routine Analyses	2-1
2.1.2 RLWTP Influent Automatic Sampling Procedure	2-1
2.1.3 Analytical Results - December 1988 through May 1992	2-2
2.1.4 Evaluation of Historical Autosampler Data	2-2
2.2 Current Influent Sampling	2-5
2.2.1 Influent Sampling by Positive-Displacement Autosampling	2-5
2.2.2 Regulatory Review of Acceptable Sample Collection Methods	2-5
2.2.3 Triple Parallel Influent Sampling Protocol	2-6
2.2.4 Triple Parallel Protocol Sampling Results	2-6
2.2.5 Evaluation of Triple Parallel Sampling Results	2-6
2.2.5.1 Manning and ISCO Parallel Sampling Results	2-6
2.2.5.2 Plant Sample Results vs. ISCO Results	2-7
2.3 Administrative Controls	2-7
2.4 Phase 1 Conclusions	2-9
2.5 Phase 1 Recommendations	2-10
3.0 Phase 2 - Mass Balance Study	3-1
3.1 Regulatory Basis for Mass Balance Study	3-1
3.2 Strategy for the Mass Balance Study	3-1
3.3 Summary and Evaluation of Previously Performed Studies	3-2
3.3.1 Waste Stream Characterization Study	3-2

TABLE OF CONTENTS (continued)

SECTION	PAGE
3.3.2 NPDES Compliance Reports	3-3
3.3.3 IT Study	3-3
3.3.4 LANL EM-7 Waste Stream Forecasts	3-3
3.3.5 Automated Chemical Inventory System	3-3
3.4 Phase 2 Conclusions	3-4
3.5 Phase 2 Recommendations	3-5
4.0 Phase 3 - Hazardous Waste Delisting and Disposal Options	4-1
4.1 Overview of the Delisting Process	4-1
4.2 Past Delisting Efforts	4-2
4.3 Delisting Process Schedule Development	4-2
4.3.1 Preparation of the Delisting Petition	4-2
4.3.2 Delisting Preparation Cost and Manhour Summary	4-9
4.3.3 Agency Review and Rulemaking	4-9
4.3.4 Potential for "Fast-Track" Delisting	4-10
4.4 Waste Disposal Options	4-10
4.4.1 Onsite Disposal of the RLWTP Sludge Drums as LLRW	4-10
4.4.2 Onsite Disposal as Mixed Waste	4-11
4.4.3 Offsite Disposal as Mixed Waste	4-12
4.4.3.1 Exemption from DOE Order 5820.2A	4-12
4.4.3.2 Waste processing and waste characterization data	4-12
4.4.3.3 Pretreatment of RLWTP sludge	4-13
4.4.3.4 Continued storage as mixed waste	4-13
4.4.3.5 Packaging and shipment as mixed waste	4-13
4.4.3.6 Final disposal as mixed waste	4-13
4.4.3.7 Summary cost and schedule for offsite mixed waste disposal	4-13
4.5 Phase 3 Conclusions	4-14
4.6 Phase 3 Recommendation	4-16
References	
Appendices	

LIST OF FIGURES

FIGURE	PAGE
1.1 Radioactive Liquid Waste Collection System	1-2
1.2 TA-50-1 Plant Sampling Locations and Waste Streams	1-3
1.3 TA-50-1 Plant Sludge Classification Timeline	1-4
4.1 Prepare a Delisting Petition and Final Rulemaking Timeframe	4-3

LIST OF TABLES

TABLE	PAGE
2.1 RCRA F-Listed Compounds Detected in Influent, Plant, Effluent and Sludge Samples, December 1988 Through May 1992	2-3
2.2 Summary of VOC and SVOC Sampling Results for RLWTP Influent Samples Collected By Manning Autosampler, December 1988 Through May 1992	2-4
2.3 Summary of VOC and SVOC Sampling Results for RLWTP Triple Parallel Influent Sample Collection, February 1993 Through May 1993	2-8
4.1 Delisting and Disposal Options, Summary of Costs and Durations	4-15

EXECUTIVE SUMMARY

The Ralph M. Parsons Company was tasked by Los Alamos National Laboratory, Waste Management Division to investigate options and recommend a final disposition for 1,252 suspected mixed waste sludge drums. The sludge was generated through routine operation of the radioactive liquid waste treatment plant (RLWTP) at TA-50. The sludge is known to contain low-level radioactive components, and is suspected to contain hazardous constituents. The waste sludge drums are labeled as hazardous and low-level radioactive (mixed) waste. The sludge, generated from December 1988 through May 1992, was labeled as mixed waste only as a very conservative precautionary measure. All sludge generated before December 1988 and after May 1992, was properly disposed of in the TA-54 low-level radioactive waste landfill. The 1,252 suspect mixed waste sludge drums are not associated with any change in treatment plant operations, process excursion, or change in the characterization of the treatment plant influent.

The investigation of options and recommendation for final disposition for the sludge drums is based on compliance with regulations promulgated under the Resource Conservation and Recovery Act (RCRA). A waste is regulated as hazardous if it is identified by the waste generator as:

- specifically listed in Title 40, Code of Federal Regulations, Chapter 261 (40 CFR 261), Subpart D;

- a mixture of listed hazardous waste and solid waste (the "mixture rule" found in 40 CFR 261.3(a)(2)(iv);

- a waste generated from the storage, treatment, or disposal of a listed hazardous waste (the "derived from" rule found in 40 CFR 261.3(c)(2)(i);

- exhibiting any of the hazardous characteristics of ignitability, corrosivity, reactivity, and toxicity.

The objective of this study is to recommend the final disposition of the 1,252 drums. Four options for arriving at the final disposition for the suspected mixed waste drums are possible. The options are:

- administratively relabeling and disposing of the drums as low-level radioactive waste, based on statistical analysis of all available waste stream characterization data;

- relabeling and disposing of the drums as low-level radioactive waste, based on regulatory exclusion of trace amounts of regulated constituents in the total wastewater flow at the treatment plant headworks;

- delisting and disposing of the drums, following federal regulatory guidelines; and

- disposing the drums as mixed waste.

This study presents a 3-phased approach to reaching a recommendation for the final disposition of the sludge drums. Phase 1 presents a definitive case for administratively relabeling and disposing of the drums as LLRW based on statistical analysis of the influent sampling results. Phase 2 presents an analysis of previous and ongoing waste stream characterization studies to determine if a mass balance justifies relabeling and disposing of the sludge drums as LLRW. However, the studies did not provide adequate data for development of a mass balance of regulated constituents at the headworks of the treatment plant. Phase 3 examined delisting as a possible option in the event that relabeling the sludge as LLRW could not be justified. Estimated costs and a proposed schedule for delisting the suspected mixed waste sludge drums are presented. Disposal of the drums as mixed waste at an offsite facility, and at the planned onsite mixed waste landfill were also examined in Phase 3.

CONCLUSIONS

Based on these analyses, conclusions are as follows:

Phase 1

(1) There is no evidence that the treatment plant received wastewater with contaminant concentrations at or above regulatory limits, and therefore the sludge is not derived from treatment of hazardous waste.

(2) Knowledge of process and administrative controls provide definitive evidence that the sludge is not a mixture of a solid and hazardous waste.

(3) The sludge does not exhibit hazardous waste characteristics of ignitability, corrosivity, reactivity, or toxicity.

Phase 2

(4) Relabeling the sludge as LLRW on the basis of a mass balance alone is not justified.

Phase 3

(5) Past delisting efforts at facilities with similar operations and waste stream characteristics indicate that delisting the suspected mixed waste sludge drums has a high probability of EPA approval.

(6) The cost of preparing a delisting petition, continued storage of the sludge, and disposal of the sludge upon approval of the delisting petition is estimated at $806,288. The duration of the delisting process is estimated at 3 years, 5 months.

(7) The cost of administratively relabeling and disposing of the RLWTP sludge drums as LLRW is estimated at $307,508. The duration of the administrative relabeling process is estimated at 12 months.

(8) The cost of disposal of the RLWTP sludge drums as mixed waste at the planned onsite mixed waste landfill is estimated at $1,483,459. The duration of the onsite mixed waste disposal process is estimated at 3 years.

(9) The cost of disposal of the RLWTP sludge drums as mixed waste at an offsite mixed waste landfill is $2,404,220. The duration of the offsite mixed waste disposal process is estimated at 10 months.

RECOMMENDATIONS

Based on the results of Phase 1, the sludge should be relabeled as LLRW and disposed of in the TA-54 low-level radioactive waste landfill.

If the RLWTP sludge drums are not administratively relabeled, a delisting petition should be prepared. Upon approval of the delisting petition, the RLWTP sludge drums should be disposed of in the TA-54 low-level radioactive waste landfill.

1.0 BACKGROUND AND INTRODUCTION

1.1 Routine Radioactive Liquid Waste Collection and Treatment

The Radioactive Liquid Waste Treatment Plant (RLWTP), also known as Technical Area 50 Plant 1 (TA-50-1), treats radioactive liquid wastes from numerous Technical Areas (TAs) of Los Alamos National Laboratory (LANL), as shown schematically in Figure 1.1. Approximately 1,000 sinks and floor drains empty into the radioactive liquid waste collection system (RLWCS) feeding the RLWTP, in addition to wastes that are brought to the treatment plant by tanker truck (LANL EM-7, 1991).

The RLWTP began operation in 1963. The primary treatment mechanism is precipitation, via addition of lime and ferric sulfate, to remove radionuclides and heavy metals. All wastewater discharged to the RLWTP is initially collected in a 75,000-gallon equalization/neutralization tank, in which wastewater pH is adjusted to a range of 7 to 9. From the 75,000-gallon tank, wastewater flows into two clarifiers where precipitation chemicals are added. The clarifiers may be operated in series or in parallel. Radionuclides and heavy metals precipitate out of solution or are adsorbed onto the lime/iron sludge. The RLWTP is designed to process in excess of 6 million gallons of wastewater received annually. Liquid effluent is discharged under a National Pollutant Discharge Elimination System (NPDES) permit. The sludge is dewatered via vacuum filtration and drummed for disposal onsite as low-level radioactive waste (LLRW). Figure 1.2 provides a simplified process flow sheet for the RLWTP (*personal communication*, Steve Hanson, 1992).

1.2 Suspected Mixed Waste from the RLWTP

From December 1988 through February 1991, sludge generated by the RLWTP was labeled as a Resource Conservation and Recovery Act (RCRA) F003 listed waste (i.e., spent nonhalogenated solvents listed based on ignitability), due to the presence of trace concentrations of acetone in the RLWTP influent. The sludge was relabeled as F001 listed waste (spent halogenated solvents used in degreasing, listed based on toxicity) in 1991. The sludge was clearly not ignitable, consisting of approximately 70 percent water, but was still suspected to contain trace concentrations of regulated constituents. The F001 classification was applied to the RLWTP sludge generated from 1991 through May 1992. From December 1988 to May 1992, 1,252 drums of RLWTP sludge were labeled and stored as mixed waste (*personal communication*, Sloan, 1993). The F001 hazardous classification, coupled with the known low-level radioactive components, made the sludge a mixed (hazardous and radioactive) waste. Drummed sludge accumulated during the period from 1988 through 1992 is currently stored in TA-54, Area G.

The decision to label the RLWTP sludge as mixed waste was administrative (Koenig memorandum, 27 May 1988). The sludge generated by the RLWTP from 1963 to 1988, and from May 1992 to the present, has been properly disposed of onsite as LLRW (Figure 1.3). There is no evidence that sludge generated during the 1988-1992 time period is different in composition than sludge generated prior to December 1988 or subsequent to May 1992. There were no changes in treatment plant operations, no process excursions, and no change in RLWTP influent characteristics to provide a basis in fact for the mixed waste designation.

FIGURE 1.1

RADIOACTIVE COLLECTION SYSTEM

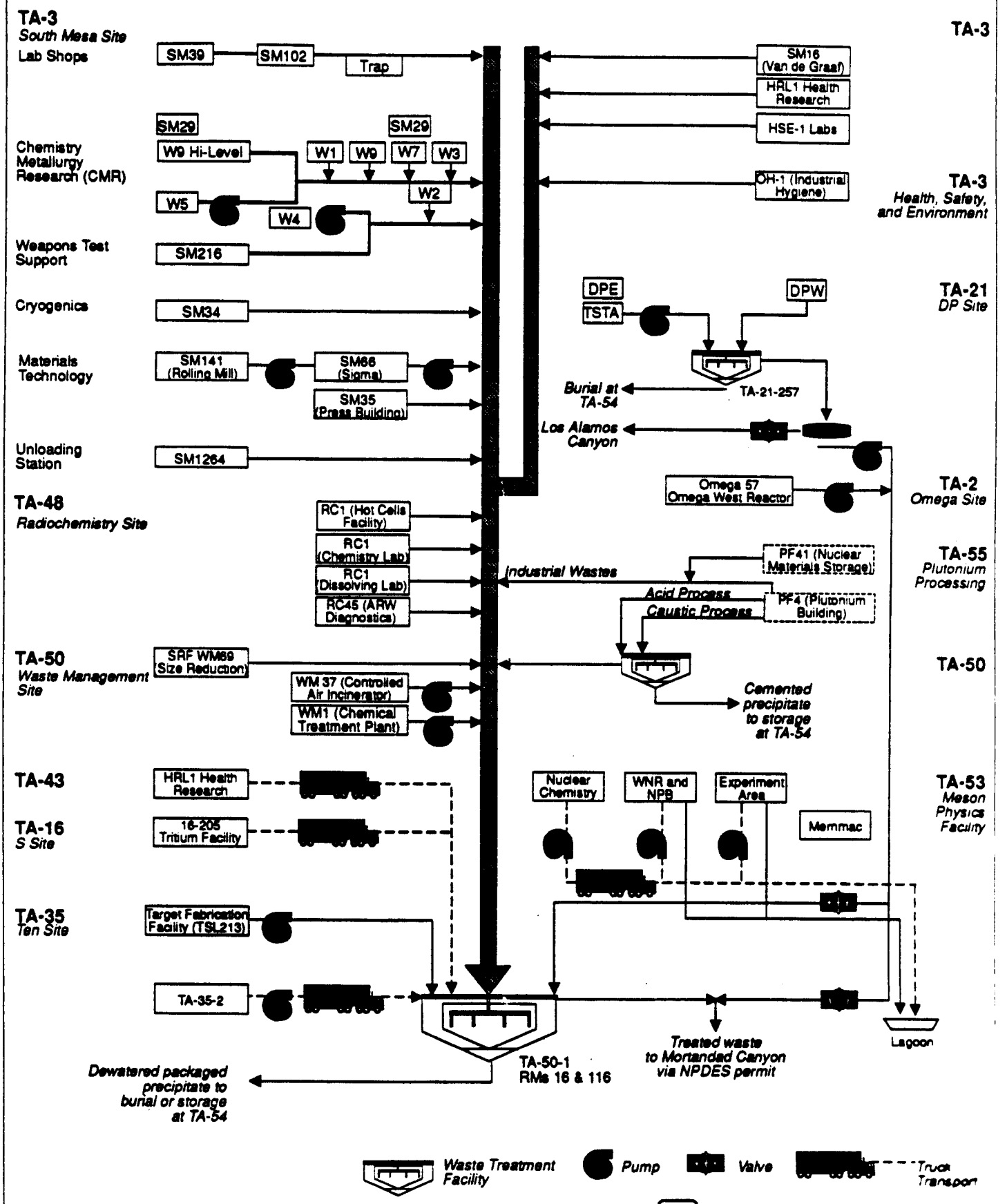

DE28400

PARSONS

1.3 Objectives and Strategy of Study

The primary objective of this study was to generate information to support a recommendation for final disposition of the drummed sludges that are labeled as mixed waste and are currently being stored in TA-54. Options for final sludge disposition include relabeling and disposing of the sludge as LLRW based on influent sampling data, relabeling and disposing of the sludge as LLRW based on a mass balance, delisting the sludge, or disposing the sludge as a mixed waste.

The objective was accomplished through a three-phased approach. Phase 1 consisted of statistical analysis and correlation of current RLWTP influent sampling data with historical (December 1988 through May 1992) data. Phase 2 consisted of review and evaluation of previous and ongoing waste stream characterization studies at LANL. The purpose of Phases 1 and 2 was to determine if a defensible case for administratively relabeling and disposing of the suspected mixed waste sludges as LLRW can be made, on the basis that the sludge has never been derived from treatment of hazardous waste. Phase 3 involved evaluation of the process of petitioning the U.S. Environmental Protection Agency (EPA) to delist the suspected mixed waste sludge. Additionally, mixed waste disposal options were investigated. The activities performed during the three work phases are described briefly in the following paragraphs.

Phase 1

All available sampling and analysis results for the RLWTP influent, liquid effluent, and sludge were reviewed and evaluated to demonstrate that a defensible case for administratively relabeling and disposing of the suspected mixed waste sludge drums as LLRW can be made. RLWTP influent sampling and analysis data from the December 1988 through May 1992 timeframe were statistically normalized, then evaluated to ensure that the sample population was appropriate for accurate characterization, and that the upper limit of the 80 percent confidence interval was less than the regulatory threshold for all RCRA F-listed constituents detected. The statistical evaluation followed the protocol prescribed in "Test Methods for Evaluation of Solid Waste" (EPA, 1986). The case for relabeling and disposal was developed by demonstrating that past sampling of the RLWTP influent from December 1988 through May 1992 is appropriate to characterize the influent as solid rather than hazardous waste. Comparison of these sampling results to regulatory thresholds demonstrated that the concentrations of regulated constituents in the RLWTP influent were consistently below levels warranting regulation as hazardous waste.

The December 1988 through May 1992 characterization data were also compared to RLWTP influent sampling results obtained from February through May 1993 under a more rigorous sampling and analysis protocol, in order to demonstrate that the sample collection method for the 1988 through 1992 timeframe was valid. In the February through May 1993 timeframe, RLWTP samples were collected in triplicate, from two automatic samplers, and from the 75,000-gallon equalization/neutralization tank. Analytical results from the triple parallel samples were statistically evaluated by performing paired t-tests. The statistical evaluation showed with 95 percent confidence, that there were no differences between the analytical results obtained from three samplers. Statistical correlation of past and present data led to a determination that the RLWTP influent was not and is not a hazardous waste. By demonstrating that an appropriate number of samples were collected using a valid sampling method, that no concentrations of regulated constituents were ever detected in concentrations at or above their regulatory thresholds, and that a statistically valid correlation between past

and present data exists, a defensible case for relabeling and disposing of the sludge as LLRW can be made.

Phase 2

Previous and ongoing chemical usage and disposal studies at LANL were evaluated to determine if a defensible case for regulatory exclusion can be made, based on a mass balance of regulated constituents in the total wastewater flow at the headworks of the RLWTP. As in Phase 1, the goal of Phase 2 was to demonstrate that the RLWTP influent was not a hazardous waste. The information from studies reviewed did not provide sufficient data to support a mass balance of regulated constituents in the RLWTP influent.

Phase 3

The process of petitioning EPA to delist the suspected mixed waste was reviewed and evaluated. The cost of the delisting effort was estimated, and a preliminary schedule for delisting was developed. Disposal options, onsite and offsite, for mixed waste were also reviewed and evaluated.

FIGURE 1.3

TA-50-1 PLANT
SLUDGE CLASSIFICATION TIMELINE

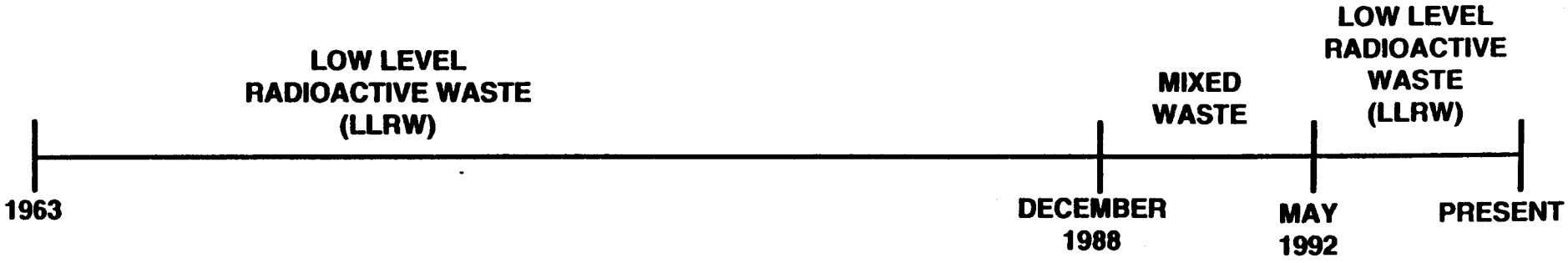

PARSONS

DE284a

FIGURE 1.2

TA-50-1 PLANT
SAMPLING LOCATIONS AND WASTE STREAMS

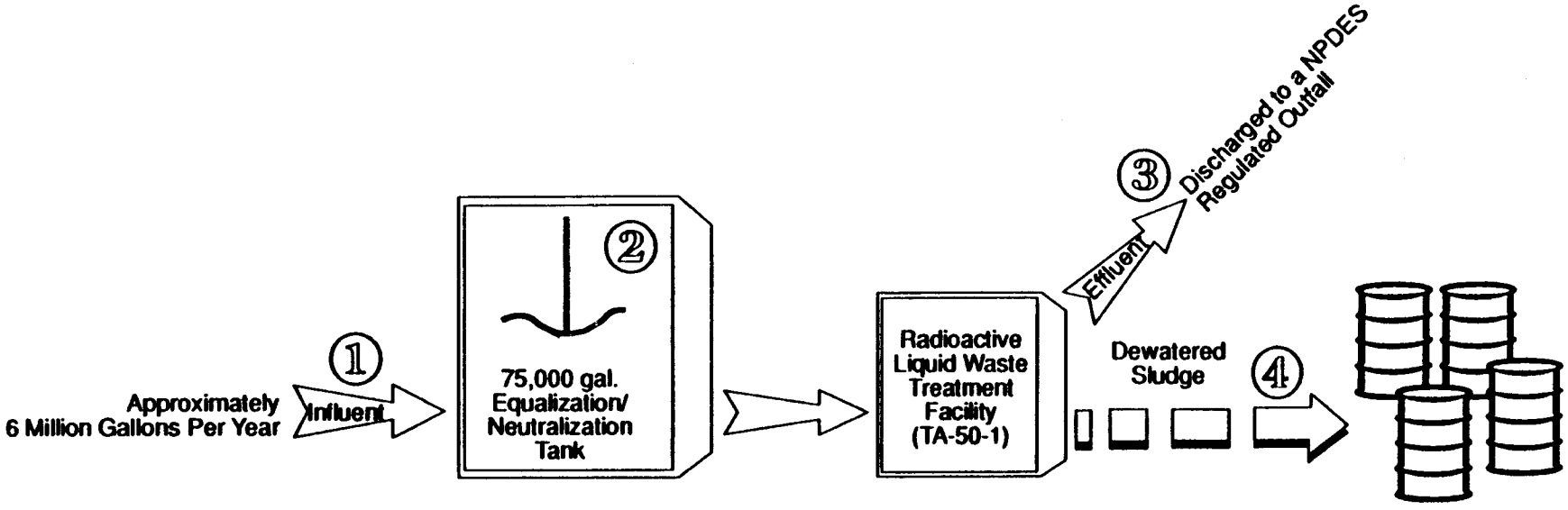

SAMPLING LOCATIONS:

1. Manning and ISCO Samplers
2. Plant
3. Effluent
4. Sludge

PARSONS

DE284b

2.0 PHASE 1 - ANALYSIS OF ANALYTICAL DATA TO JUSTIFY RELABELING THE RLWTP SLUDGE

2.1 Review of Historical Data

2.1.1 Sampling Locations and Routine Analyses

RLWTP influent and effluent have been sampled at several locations in the treatment process, as depicted in Figure 1.2. RLWTP influent (sampling location 1 on Figure 1.2) is sampled and analyzed for metals concentrations and radionuclide activity. Since December 1988, the RLWTP influent has also been sampled and analyzed for volatile and semivolatile organic compounds (VOCs and SVOCs). A sampling port between the 75,000-gallon tank and the clarifiers (sampling location 2) is also used for collection of samples when the plant is operating.

RLWTP liquid effluent (sampling location 3) is sampled monthly to support NPDES permit compliance. The RLWTP NPDES permit requires monitoring of ammonia, chemical oxygen demand, total suspended solids, cadmium, chromium, copper, iron, and zinc. Monitoring the concentration of total toxic organics in liquid effluent, as required in the Code of Federal Regulations, Title 40, Chapter 433, Part 11 [40 CFR 433.11 (e)], has only recently been added to the RLWTP NPDES requirements (pers. comm., Steve Rae, May 1993). The term "total toxic organics" means the summation of all quantifiable values greater than 0.01 milligrams per liter for a list of 111 toxic organics (see Appendix A). The RLWTP discharge limit for total toxic organics is 1 milligram per liter. RLWTP dewatered sludge (sampling location 4) is routinely sampled to ensure the radioactive constituents are at low levels, and for determination of the toxicity characteristic. Sludge sampling and routine analysis is performed for the radionuclides U^{235}, Pu^{238}, Pu^{239}, and Am^{241}, and heavy metals.

While some historical (1988-1992) RLWTP liquid effluent sampling and analysis results are available, these results do not significantly contribute to the determination of historical influent characterization. The RLWTP NPDES permit did not require analysis of liquid effluent for VOCs or SVOCs in the 1988 through 1992 timeframe. Similarly for the historical sludge sampling results, the only requirement for sampling and analysis of RLWTP sludge is to ensure the radioactive constituents are at low levels. The historical sludge data does not significantly contribute to the historical influent characterization. However, the RLWTP sludge sampling results do support the conclusion that the sludge does not exhibit any of the RCRA-defined hazardous characteristics of ignitability, corrosivity, reactivity, or toxicity (Brown, 1993).

The RLWTP influent sampling and analysis program, from 1988 to 1992 and the sampling protocol utilized from February to May 1993 provide the key data for review and evaluation.

2.1.2 RLWTP Influent Automatic Sampling Procedure

A Manning automatic sampler (autosampler) was installed in 1988 to provide the influent waste stream characterization data needed to confirm the presence or absence of regulated constituents at concentrations requiring classification as mixed waste. This device was in use through May 1992, when it was replaced (see Section 2.2.1). The Manning autosampler drew time-composited samples from the RLWCS immediately upstream from the 75,000-gallon tank. Samples were collected for routine analysis of

metals and radionuclides on days when the plant was in operation. Samples were drawn every 15 minutes via the Manning vacuum pump, and collected in a 10-gallon, covered tank. A 2-gallon aliquot was drawn by the plant operator after agitating the 10-gallon tank, with an electric mixer, for 3 minutes. The 2-gallon aliquot was split for analysis of radionuclides, heavy metals. If the RLWTP was not in operation, the 10-gallon compositing tank was drained and cleaned. Thus, the samples collected were representative of influent composited throughout a 24-hour period. The Manning samples were analyzed for VOCs and SVOCs, on a monthly basis.

2.1.3 Analytical Results - December 1988 through May 1992

Thirty-three samples were collected by RLWTP plant operators from the Manning autosampler 10-gallon composite tank, and analyzed for VOCs and SVOCs by the LANL analytical laboratory (EM-9), from December 1988 through May 1992. Fourteen compounds that could have originated as RCRA F001, F002, F004, or F005 listed wastes [40 CFR 261.31 (a)] were detected in RLWTP influent samples. These compounds are listed in Table 2.1. The analytical results are included in Appendix B. Although compounds (VOCs and SVOCs) that could have originated as F-listed wastes were detected, there were no detections of concentrations at or above regulatory thresholds. These data are summarized in Table 2.2.

In addition to the RLWTP influent samples collected using the Manning autosampler, 14 samples from the sampling port between the 75,000-gallon tank and the clarifiers (plant samples), 13 liquid effluent samples, and 26 effluent sludge samples were collected. Compounds detected in these samples which could have originated as F-listed wastes are also listed in Table 2.1. The concentrations of regulated constituents in plant, liquid effluent, and sludge samples provide no evidence of hazardous levels in the RLWTP influent.

2.1.4 Evaluation of Historical Autosampler Data

Evaluation of analytical results obtained from Manning samples for December 1988 through May 1992 focused on two issues. First, the data must show that an appropriate sample population for accurate waste stream characterization was obtained, in accordance with requirements for sampling design, development, and implementation found in *Test Methods for Evaluating Solid Waste*, SW-846 (EPA, 1986). SW-846 states that "the appropriate number of samples...means the minimal number of samples needed to demonstrate that the upper limit of the confidence interval for the true mean is less than the applicable regulatory threshold". Second, the data must show, per SW-846, that the concentrations of regulated constituents detected have not exceeded regulatory thresholds. SW-846 also requires the data to show that, within the limits of an 80-percent confidence interval, the maximum concentration of any compound of concern is below the regulatory threshold. If the sample population is appropriate and regulatory thresholds are not equalled or exceeded, the waste stream is regulated as solid waste, rather than a hazardous waste. Historical sample analysis results, statistical evaluations of results, and relevant guidance from SW-846 are presented in Appendix B.

SW-846 provides guidance in Section 9.1.1.4.1 on the appropriate number of composite samples to be collected from solid waste. In order to determine the

TABLE 2.1
RCRA F–listed Compounds Detected
in Influent, Plant, Effluent and Sludge Samples
December 1988 Through May 1992

All detected concentrations of the compounds listed were below regulatory limits.

RCRA F–list compounds detected in influent samples

F001	tetrachloroethene
F001	trichloroethene
F001	methylene chloride
F001	1,1,1–trichloroethane
F001	carbon tetrachloride
F002	chlorobenzene
F002	trichlorotrifluoroethane
F002	o–dichlorobenzene
F002	trichlorofluoromethane
F002	1,1,2–trichloroethane
F005	toluene
F005	2–butanone
F005	carbon disulfide
F005	benzene

RCRA F–list compounds detected in plant samples

F001	tetrachloroethene
F001	methylene chloride
F001	1,1,1–trichloroethane
F001	carbon tetrachloride
F002	trichlorofluoromethane
F005	toluene
F005	2–butanone
F005	carbon disulfide
F005	benzene

RCRA F–list compounds detected in liquid effluent samples

F001	methylene chloride
F001	1,1,1–trichloroethane
F005	toluene
F005	2–butanone

RCRA F–list compounds detected in sludge samples

F001	tetrachloroethene
F001	methylene chloride
F001	carbon tetrachloride
F001	1,1,1–trichloroethane
F002	trichlorofluoromethane
F005	toluene
F005	2–butanone
F005	carbon disulfide
F005	benzene

TABLE 2.2
Summary of VOC and SVOC Sampling Results
RLWTP Influent Samples Collected By Manning Autosampler
December 1988 Through May 1992

COMPOUND a/	F-list	REG. LIMIT b/ (ppm)	NON-DETECTS	DETECTIONS	DETECTIONS AT OR ABOVE REG. LIMIT b/
tetrachloroethene	F001	1	27	6	0
trichloroethene	F001	1	28	5	0
methylene chloride	F001	25	12	21	0
1,1,1-trichloroethane	F001	25	18	15	0
carbon tetrachloride	F001	1	28	5	0
trichlorotrifluoroethane	F002	25	32	1	0
chlorobenzene	F002	25	29	4	0
o-dichlorobenzene	F002	25	32	1	0
trichlorofluoromethane	F002	25	27	6	0
1,1,2-trichloroethane	F002	see note b/	31	2	0
toluene	F005	25	23	10	0
2-butanone	F005	25	24	9	0
carbon disulfide	F005	25	24	9	0
benzene	F005	see note b/	27	6	0

a/ Compounds are those found on RCRA F-lists and detected in the RLWTF influent.

b/ Regulatory limits are defined in 40 CFR 261.3(a)(2)(iv)(A) and 40 CFR 261.3(a)(2)(iv)(B). 1,1,2-trichloroethane and benzene are regulated under 40 CFR 261.31 and must be less than 10% by volume of solvent mixtures used in degreasing, before use.

appropriate number of samples required per SW-846, sampling results for all fourteen compounds detected (Table 2.1), were evaluated. As all data sets exhibited negative binomial distribution, the arcsine transformation was performed prior to statistical analysis, as required in SW-846, Section 9.1.1.2.

The calculation of appropriate number of samples (SW-846, Table 9-1, equation 8, and Section 9.1.1.2) based on regulated constituent detections indicated that one sample would be sufficient to characterize the RLWTP influent. SW-846 also recommends that "a somewhat greater number of samples than indicated..." should be collected as a precaution against inaccurate estimates of mean contaminant concentrations (Section 9.1.1.2). The 33 samples collected and analyzed from December 1988 through May 1992 meet this recommendation. An appropriate number of samples to characterize the RLWTP influent from December 1988 through May 1992 was collected and analyzed in accordance with SW-846.

To determine if chemical contaminants are present at hazardous concentrations SW-846, Section 9.1.1.1, states the following requirements:

"... for each chemical contaminant of concern, a confidence interval (CI) is described within which the true mean occurs if the sample is representative, which is expected of about 80 out of 100 samples. The upper limit of the 80% CI is then compared with the appropriate regulatory threshold. If the upper limit is less than the regulatory threshold, the chemical contaminant is not considered to be present in the waste at a hazardous level."

The upper limit of the 80% CI was determined for each of the 14 regulated constituents detected in the RLWTP influent (Table 2.1) from December 1988 through May 1992. The upper limit of the 80% CIs for all contaminants of concern were found to be less than the respective regulatory thresholds (40 CFR 261.3). Thus, none of the chemical contaminants are considered to be present in the RLWTP influent at a hazardous level.

2.2 Current Influent Sampling

2.2.1 Influent Sample Collection by Positive-Displacement Autosampling

The data resulting from analysis of samples collected by the Manning autosampler provide no indication of the presence of regulated constituents (VOCs/SVOCs) in the RLWTP influent above the 1 ppm or 25 ppm regulatory limits, as defined in 40 CFR 261.3(a)(2)(iv)(A) and (A)(2)(iv)(B), from December 1988 through May 1992. A second autosampler, manufactured by ISCO, was installed in May 1992. The ISCO autosampler was installed to provide further definitive evidence that the RLWTP influent is not hazardous. The ISCO autosampler draws time-composited samples by positive displacement, as opposed to the Manning which uses a vacuum pump to draw samples. The ISCO autosampler also composites samples in a sealed, refrigerated vessel. The potential for volatilization of VOCs or SVOCs from the ISCO samples is minimal.

2.2.2 Regulatory Review of Acceptable Sample Collection Methods

RCRA regulations and SW-846 were reviewed to ensure that the results obtained from the ISCO autosampler are acceptable to regulatory agencies. There is no RCRA regulation that specifies acceptable or unacceptable autosampling methods for

wastewater sample collection. However, compliance with SW-846, Sampling Considerations (Section 4.1) for organic analytes is required by 40 CFR 261 Appendix III. The referenced section of SW-846 addresses the necessity of sealing the collected samples in screw-cap jars or vials with Teflon-lined caps, but does not specifically address autosampler collection or compositing methods.

Section 9.2.2.4 of SW-846 describes use of vacuum pumps and positive displacement pumps for sample collection. The description of vacuum pumps states "their use may result in out-gassing of dissolved gasses or volatile organics and is therefore limited in many sampling applications". The description of positive displacement pumps states "the potential for aerating or stripping volatile organics" is minimized.

No definitive statement on the acceptability of autosampling technique was found in RCRA regulations or SW-846. However, the requirements for use of sealed jars or vials for collection of organic samples, and the description of positive-displacement pumps make it clear that the ISCO autosampler collection method is acceptable to regulatory agencies.

2.2.3 Triple Parallel Influent Sampling Protocol

The ISCO autosampler was utilized in lieu of the Manning autosampler from May 1992 to February 1993. From February 1993 through May 1993, both autosamplers were used simultaneously. Parallel samples were collected during this 4-month period with the objective of determining the validity the Manning data collected from December 1988 through May 1992. Concurrent with the ISCO and Manning sample collection, plant samples were collected, via the sampling port in the line between the 75,000-gallon tank and the clarifiers. The plant samples were collected primarily as additional validation of historical data. The plant samples reflect the extended residence time and agitation of the RLWTP influent in the 75,000-gallon equalization/neutralization tank prior to sampling (in contrast to the ISCO and Manning samples), and provide representation of the maximum VOC/SVOC concentrations reaching the treatment process. This protocol was referred to as triple-parallel sample collection.

2.2.4 Triple-Parallel Protocol Sampling Results

Fifty-five sets of samples from the ISCO and Manning autosamplers, and immediately downstream from the 75,000-gallon tank (plant samples) were collected and analyzed from February to May 1993. Six compounds which could have originated as RCRA F-listed wastes were detected. These compounds were 2-butanone, carbon disulfide, methylene chloride, toluene, chlorobenzene, and 1,1,1-trichloroethane. A total of 97 detections of these compounds were reported for the 55 Manning, 55 ISCO, and 55 plant samples, and are summarized in Table 2.3. No detections of regulated constituents were above regulatory limits.

2.2.5 Evaluation of Triple Parallel Sampling Results

2.2.5.1 Manning and ISCO Parallel Sampling Results

In order to determine if the Manning and ISCO autosampler sampling results can be considered statistically equivalent during the performance of the triple-parallel sampling protocol (thus validating the historical influent data), the data were analyzed using a

paired-sample t test. As summarized in Table 2.3, the detections of compounds that could have originated as RCRA listed wastes in the RLWTP were detected relatively infrequently throughout the triple-parallel sampling period. The compound most frequently detected in both the Manning and ISCO samples was acetone. Acetone is not an F001-listed chemical, but its frequency of detection provides the best data for statistical analysis. Sampling and analysis data, and the t test calculations are presented in Appendix B.

It can be concluded, based on the results of the paired-sample t test, that the Manning and ISCO autosamplers provide equivalent analytical results, at a statistical confidence interval of 95 percent. There is no indication that VOCs or SVOCs were lost from the historical (i.e., Manning) samples.

2.2.5.2 Plant Sample Results vs. ISCO Results

In addition to the Manning and ISCO samples collected upstream from the 75,000-gallon tank, a third plant sample from the port in the line between the 75,000-gallon tank and the clarifiers was also collected in parallel. While the analytical results from the plant samples are not directly comparable to the Manning and ISCO samples, results obtained from the plant samples were evaluated to demonstrate that the plant sample results are not significantly different from the Manning and ISCO results. Comparable results for plant and influent samples validate the historical plant sampling results and verify the conclusion that no volatilization of regulated constituents occurs, even in the 75,000-gallon equalization/neutralization tank, which is continuously stirred, open to the atmosphere. This conclusion also provides additional support for the case that regulated constituents are not and historically have not been present in the RLWTP influent at concentrations warranting regulation as hazardous waste.

A paired-sample t test analysis was performed on the detected concentrations of acetone in the plant and ISCO autosampler samples. Acetone again provided the largest number of detections, and the thus the best statistical basis for evaluation. The paired-sample t test revealed that the ISCO and plant sample acetone results are statistically equivalent (at a 95 percent confidence interval). There is no evidence that regulated constituents volatilize at the 75,000-gallon tank.

2.3 Administrative Controls

Administrative controls to prevent discharge of regulated constituents to the RLWCS have been in place prior to, during, and after the period of accumulation of suspected mixed waste sludge. The primary administrative control is Administrative Requirement (AR) 10-1 (Appendix A), which was established in 1984, and reissued without substantial change in content in 1991. The objective of AR-10-1 is to define the requirements to minimize generation of radioactive liquid waste and keep the level of radioactivity as low as reasonably achievable. AR-10-1 requires the preparation, review, and approval of standard operating procedures (SOPs) for generation and handling of radioactive liquid waste, and specifically states that "solvents, oils, and certain liquid chemical waste must not be discarded into sinks or drains connected to the radioactive liquid waste pipeline."

A facility-wide search and review of SOPs was conducted in 1991 by LANL EM-7. The conclusion of this review was that "throughout the lab, specific procedures are documented and practiced that preclude the introduction of hazardous waste constituents into the liquid radioactive waste sewer" (Lindsay, LANL EM-7, 1991).

TABLE 2.3
Summary of VOC and SVOC Sampling Results
RLWTP Triple Parallel Influent Sample Collection
February 1993 Through May 1993

COMPOUND a/		NONDETECTIONS b/			DETECTIONS			DETECTIONS AT OR ABOVE REG. LIMIT c/		
	F list	M	I	P	M	I	P	M	I	P
methylene chloride	F001	46	47	25	9	8	30 d/	0	0	0
1,1,1-trichloroethane	F001	53	54	54	2	1	1	0	0	0
chlorobenzene	F002	52	53	51	3	2	4	0	0	0
toluene	F005	54	54	54	1	1	1	0	0	0
2-butanone	F005	54	53	53	1	2	2	0	0	0
carbon disulfide	F005	45	42	49	10	13	6	0	0	0
acetone a/		17	15	1	38	40	54	0	0	0

a/ All compounds listed, except acetone, are those found on the RCRA F lists, and detected in the RLWTF influent. Acetone is not a chemical of concern in the RLWTF influent, however detections of acetone provide the best database for statistical comparison of triple parallel samples.

b/ M = Manning autosampler; I = ISCO autosampler; P = plant samples.

c/ Regulatory limit is 25 parts per million for all compounds [40 CFR 261.3(a)(2)(iv)(B)].

d/ Plant sampling detections of methylene chloride may be due to (1) process addition of chlorinated water, (2) chlorides present in neutralization chemical additives, or, (3) other anomalous conditions.

2.4 PHASE 1 CONCLUSIONS

The number of influent samples (i.e., 33) collected from December 1988 through May 1992 was appropriate, per SW-846, to characterize the RLWTP influent.

The upper limits of the 80-percent CIs for each detected regulated constituent were found to be below their respective regulatory thresholds. None of the regulated constituents detected were present at hazardous levels, per SW-846.

The triple-parallel sampling protocol, undertaken from February to May 1993, reveals that the Manning and ISCO influent sample analytical results are statistically equivalent. This conclusion validates the historical (December 1988 through May 1992) Manning sampling results.

The triple-parallel sampling protocol also reveals that the plant sample results are equivalent to the ISCO results. This conclusion validates the historical plant sampling results. The sampling and analysis data demonstrate that the RLWTP influent is not a hazardous waste, therefore the sludge is not derived from treatment of a hazardous waste.

Administrative requirements and SOPs were in place prior to and throughout the time period of suspected mixed waste accumulation, and have effectively prevented the introduction of regulated constituents into the RLWCS.

The cost of relabeling and disposing of the sludge as LLRW was estimated by LANL Waste Management Division (EM-7) at $165,776 (LANL EM-7, 1991).

2.5 PHASE 1 RECOMMENDATIONS

The historical data has been proven to provide appropriate characterization of the RLWTP influent, and demonstrates that the RLWTP was not a hazardous waste stream. The triple-parallel sampling protocol provided validation of the historical data. The RLWTP influent is not currently, and has not in the past been managed as hazardous waste. Since the RLWTP sludge, accumulated from December 1988 through December 1992, was not derived from treatment of hazardous waste, it should not be labeled as mixed waste.

The Phase 1 sampling results and conclusions should be provided to LANL Waste Management EM-7 upper management for review and determination of the appropriate course of action. EM-7 will be responsible for determining the LANL approval signature chain prior to submission of a plan to relabel the RLWTP sludge to the U.S. Department of Energy (DOE), New Mexico Environment Department (NMED), and EPA.

3.0 PHASE 2 - MASS BALANCE STUDY

3.1 Regulatory Basis for Mass Balance Study

In order to demonstrate that the RLWTP sludge is not a mixed waste, the sludge must be shown not to fit any of the definitions of hazardous waste. RCRA regulates waste as hazardous if the waste (1) is specifically listed in regulations [40 CFR 261, Subpart D], (2) is a mixture of listed hazardous wastes and other solid wastes [40 CFR 261.3(a)(2)(iv)], (3) is derived from treatment of listed hazardous wastes [40 CFR 261.3(c)(2)(i)], or (4) exhibits the characteristics of ignitability, reactivity, corrosivity, or toxicity (40 CFR 261, subpart C). As the RLWTP effluent sludge is clearly not a listed hazardous waste, or a mixture of listed hazardous wastes with other solid wastes, and does not exhibit any of the characteristics of hazardous waste, (see Phase 1 discussions), the sludge must only be shown not to be derived from treatment of listed hazardous wastes (Brown, 1993). The conclusion that the sludge is not derived from treatment of hazardous wastes can be reached if the RLWTP influent is excluded from the definition of hazardous waste.

Regulatory exclusions from the definition of hazardous waste that are potentially applicable to the RLWTP influent are found in the 40 CFR 261.3. Specifically, 40 CFR 261.3 (a)(2)(iv)(A) and (a)(2)(iv)(B) cover exclusions of "...spent solvents...provided that the maximum total weekly usage of these solvents (other than the amount that can be demonstrated not to be discharged to the wastewater) divided by the average weekly flow of wastewater into the headworks of the facility's wastewater treatment plant or pretreatment system does not exceed one part per million" for carbon tetrachloride, tetachloroethylene, or trichloroethylene [40 CFR 261.3 (a)(2)(iv)(A)], or 25 parts per million (ppm) of the following spent solvents: methylene chloride; 1,1,1-trichloroethane; chlorobenzene; cresols; cresylic acid; nitrobenzene; toluene; methyl ethyl ketone; carbon disulfide; isobutanol; pyridine; and spent chlorofluorocarbon solvents [40 CFR 261.3 (a)(2)(iv)(B)].

These exclusions from definition as hazardous waste provide justification for relabeling the 1.252 sludge drums, accumulated from December 1988 through May 1992, from suspected mixed waste to LLRW. If the RLWTP influent can be shown to be excluded by mass balance analysis (i.e., calculation and/or records showing the mass of spent solvents that reach the RLWTP headworks), then the effluent sludge can also be shown to excluded from all definitions of hazardous waste.

3.2 Strategy for the Mass Balance Study

The data needed for a regulated constituent mass balance evaluation of the RLWTP influent include:

(1) maximum total weekly usage of solvents in all locations that discharge into the RLWCS;

(2) mass of solvents that can be demonstrated not to have been discharged to the RLWCS; and

(3) average weekly flow of wastewater through the RLWTP.

The mass of solvents reaching the RLWTP headworks can be determined by subtracting solvents used but not discharged (item 2 above) from total weekly solvent

usage (item 1). The weekly mass of solvents reaching the headworks can then be divided by total weekly wastewater volume (item 3) to determine the maximum concentration of spent solvents in the influent stream. Assuming availability of reliable records of solvent usage and total wastewater flow for the time period in question, the resulting mass balance could be used to justify relabeling the suspected mixed waste sludge drums as LLRW, under the exclusions from the definition of hazardous waste, cited above.

3.3 Summary and Evaluation of Previously Performed Studies

Previously performed and current studies were examined for potential relevance to the historical characterization of the RLWTP influent. The parties involved in these studies were interviewed to determine the scope and timeframe of the studies. Documentation generated by these studies was also reviewed. Each study is briefly described and evaluated for its potential relevance to an RLWTP influent mass balance below. The purpose of the mass balance calculation is to demonstrate that RCRA-listed F001 wastes were not present in the RLWTP influent stream during the period of accumulation of suspected mixed waste sludge, at concentrations warranting identification of the sludge as mixed waste. Studies that were examined through interview and/or documentation review include:

- LANL EM-8 Waste Stream Characterization Study

- NPDES Compliance Reports

- International Technologies Corp. (IT) Study

- LANL EM-7 Waste Stream Forecasts

- Automated Chemical Inventory System

3.3.1 Waste Stream Characterization Study

A waste stream characterization study is being performed by Santa Fe Engineering for LANL Environmental Protection Group (EM-8). The purpose of this study is to identify the final disposition of all waste streams (i.e., treatment or discharge to the environment) to comply with an EPA administrative order. The administrative order was issued due to lack of adequate information on LANL's NPDES permit application. Under the order, LANL is required to demonstrate that LLRW is not reaching the sanitary sewer system, that sanitary sewer wastes are being appropriately treated, and that wastewater discharges to the environment are being eliminated. This study involves dye tracing to map laboratory drains to their final outfall. Mike Saladen, of LANL EM-8, provided information on the waste stream characterization study.

This study is not relevant to RLWTP influent mass balance study, because it does not provide identification and concentrations of chemical constituents in the waste streams. Its main purpose is to generate a map of sanitary and LLRW drain systems, and show where drain system modifications are necessary. It does not contain data indicative of the total weekly use of solvents, the mass of solvents that were not discharged to the RLWCS, or average weekly wastewater flow.

3.3.2 NPDES Compliance Reports

The RLWTP liquid effluent is sampled and analyzed monthly for compliance with NPDES discharge permit limitations. The discharge permit requires analysis for ammonia, chemical oxygen demand, total suspended solids, cadmium, chromium, copper, iron, zinc, and total toxic organics. RLWTP influent and sludge are not required to be sampled under the NPDES program. Information on NPDES compliance reports was obtained from Steve Rae, of LANL EM-8.

NPDES compliance reports are not relevant to RLWTP influent mass balance study, because analyses for the RCRA F-001 listed compounds of concern are not required or performed. Even if the compounds of concern were routinely analyzed in the liquid effluent, an assumption would have to be made regarding the partitioning of regulated constituents between the RLWTP sludge and liquid effluent discharge to reach a conclusion about concentrations of regulated constituents in the RLWTP influent. None of the data needed for an RLWTP influent mass balance are provided by NPDES compliance reports.

3.3.3 IT Study

The IT study was performed in 1991, and involved a survey of Technical Areas to determine if hazardous waste could possibly be discharged to the RLWCS. Laboratories were visited, and personnel were interviewed with regard to chemical waste disposal practices. Documentation generated by IT was provided by Bill Midkiff, LANL EM-7.

The IT study data are not relevant to RLWTP sludge contaminant mass balance. Chemical waste quantities and concentrations discharged to the RLWTP drain system were not determined. The time period of the IT study covers only a portion of the period of accumulation of suspected mixed waste sludge drums. Additionally, evidence of hazardous chemical discharge to the RLWCS presented in the IT study is anecdotal, and due to the lack of detail in documentation would be difficult to substantiate.

3.3.4 LANL EM-7 Waste Stream Forecasts

Several other studies are ongoing. They include an EM-7 study to identify potential near-term future changes in the low-level radioactive constituents in the RLWCS. Information for this study is confined to LLRW only, and is being gathered by surveying RLWTP "users". A 50-year look-ahead study is also being conducted by survey to determine future RLWTP operations requirements. As both these studies are intended to forecast future needs, they are not relevant to the RLWTP suspected mixed waste sludge currently in storage. Information on these studies was provided by Steve Hanson and Mort Sanders.

3.3.5 Automated Chemical Inventory System

The automated chemical inventory system (ACIS) is a computer database, established in February 1993. The purpose of establishing the database was primarily to document sitewide chemical information for Superfund Amendments and Reauthorization Act (SARA) Title 3 "public's right to know" requirements. All chemicals purchased by LANL are tracked by ACIS through three receiving stations to their point of use. ACIS is currently used to generate annual chemical usage reports, and is capable of providing a wide variety of other reports. ACIS has the capability of

recording daily chemical usage, but is not currently being used for daily reporting. ACIS was established in February 1993. There is no plan to enter historical data into ACIS. Tim Martinez, of LANL Automated Data Processing, provided ACIS information.

ACIS data are not relevant to RLWTP influent mass balance for several reasons. First the timeframe of data collection does not coincide with the timeframe of concern for the RLWTP sludge drum accumulation. Second, ACIS does not show process usage of chemicals versus chemical waste discharged into drains. Thus, ACIS data can not be used as a basis for a mass balance. The chemical quantities used or demonstrated not to be discharged to the drain system, and chemical quantities discharged to drains would be estimates that could not be substantiated using available data.

3.4 PHASE 2 CONCLUSIONS

All potentially relevant studies were reviewed by examination of documents or by interviewing people involved with the performance of the studies. The completeness of the review effort was confirmed in discussions with Juan Corpion, of LANL EM-8.

The previous studies reviewed do not provide a defensible data base for a mass balance analysis of historical RLWTP influent. Historical data are inadequate to determine the maximum weekly usage of solvents in all locations that contribute to the RLWTP influent, and to determine the mass of solvents that can be demonstrated not to have been discharged to the RLWTP. The only data that are available and needed for the historical mass balance are the average weekly flows of wastewater through the RLWTP.

Ongoing database development efforts and waste stream characterizations do not support the use of a mass balance as a defensible means of relabeling the RLWTP suspected mixed waste sludge. Given the continuing change in missions and operations (i.e., changes in chemical use) of individual laboratories on the RLWCS, current studies will not provide relevant data relating to the identification and concentrations of regulated constituents present in the suspected mixed waste sludge drums, that are in storage.

3.5 PHASE 2 RECOMMENDATIONS

The case for relabeling the suspected mixed waste drums through historical mass balance is not defensible and should not be considered further.

4.0 PHASE 3 - HAZARDOUS WASTE DELISTING AND DISPOSAL OPTIONS

Phase 3 of this study describes the process of petitioning EPA for delisting of hazardous waste. Once delisted, a hazardous waste may be managed as a solid waste. In the case of the RLWTP sludge, once delisted, the sludge can be managed as LLRW and disposed of in the TA-54 LLRW landfill. In the following sections, the delisting process is summarized, a schedule for delisting the RLWTP sludge is developed, and the cost of delisting is estimated.

Cost estimates have also been developed for disposing of the RLWTP sludge as mixed waste, onsite and offsite. Disposal as mixed waste is the final option for managing the RLWTP sludge, and should only be pursued in the event that a delisting petition is prepared, and denied by EPA.

Regulatory Basis for Delisting

Wastes are regulated under RCRA as hazardous if they fit any of the following criteria:

- The waste is specifically listed in 40 CFR 261, Subpart D;
- The waste is a mixture of hazardous and solid waste [40 CFR 261.3(a)(2)(iv)];
- The waste is derived from treatment of hazardous waste [40 CFR 261.3(c)(2)(i)]; or
- The waste exhibits any one or more of the characteristics of ignitability, corrosivity, reactivity, or toxicity (40 CFR 261, Subpart C).

The RLWTP sludge is not a mixture of hazardous and solid waste. Evaluation of RLWTP influent sampling results (Phase 1 of this study) show that the RLWTP sludge is not derived from treatment of hazardous waste. The RLWTP sludge is not ignitable, due to its high water content. No corrosive or reactive constituents are present in the RLWTP treatment process, and monthly sampling and analysis of the sludge show that it does not exhibit the toxicity characteristic. The stored RLWTP sludge is however labeled as a listed waste.

Listed wastes were broadly defined by EPA to ensure that wastes containing toxic or carcinogenic constituents, wastes exhibiting hazardous characteristics, and/or wastes that cause specific detrimental environmental effects would be regulated. However, EPA also recognized that a listed waste at a particular facility may not be hazardous. Therefore, EPA established a procedure for excluding or "delisting" specific listed wastes. The delisting procedure is found in 40 CFR 260.20 and 260.22 (EPA, 1993).

4.1 Overview of the Delisting Process

Preparation of a delisting petition involves examination of the waste-generating process, identification of regulated constituents that could be present in the waste, preparation of a sampling plan and subsequent waste sampling, laboratory analysis of the waste samples, and preparation of the delisting petition, based on the above information. EPA has published *Petitions to Delist Hazardous Wastes, A Guidance Manual* (EPA/530-R-93-007, March 1993), to provide detailed instructions on the delisting process. General information on the time frames associated with completing the petition, agency review, and rulemaking are also provided in the delisting guidance manual.

4.2 Past Delisting Efforts

Hazardous wastes that have been excluded from regulation through the delisting process are described in 40 CFR 261 Appendix IX. Several wastes similar to the RLWTP sludge have been successfully delisted (Brown 1993). One ruling is of particular relevance to the RLWTP sludges. Eastman Kodak Company petitioned EPA to delist sludge generated from an industrial wastewater treatment facility. Kodak had identified their sludge as hazardous due to trace concentrations of spent solvents in treatment plant influent. In reviewing Kodak's delisting petition EPA concluded that the sludge effluent from Kodak's wastewater treatment plant was excluded from regulation because regulated constituents were not detectable in the sludge, and the concentrations of regulated constituents at the treatment plant headworks were below regulatory thresholds, as defined in 40 CFR 261.3(a)(2)(iv)(B). The RLWTP sludge is analogous to Kodak's successfully delisted sludge, and it is highly probable that EPA would grant an exclusion for the RLWTP sludge, if petitioned.

4.3 Delisting Process Schedule Development

This section provides the schedule, man-hour estimate, and cost estimate for delisting the RLWTP sludges. Figure 4.1 provides a schedule for delisting the RLWTP sludges currently classified as mixed waste. The schedule consists of two main components: (1) preparation of the delisting petition; and (2) EPA review and rulemaking. The schedule is based on the guidance provided by EPA on preparing delisting petitions (EPA, 1993). Work elements are derived from the EPA delisting guidance requirements. The rationale for the schedule durations, man-hour loading, technical expertise and personnel requirements, and subtask scope are provided in the following paragraphs.

4.3.1 Preparation of the Delisting Petition

Preparation of the delisting petition is the responsibility of the waste-generating facility owner or operator. Development of the RLWTP sludge delisting cost estimate assumes the following:

- The cost associated with continued storage of the RLWTP sludge as mixed waste throughout the delisting process is estimated at $65,100 per year, plus 5% annual escalation (Kelly, 1993);

- The cost associated with disposal of the RLWTP sludge onsite as LLRW, when the delisting petition is approved is estimated at $182,768. This cost is based on a 1991 estimate (LANL EM-7, 1991), plus 5% annual escalation for two years;

- A standard labor rate of $70 per hour is assumed for all University and subcontractor personnel involved in the delisting petition preparation;

- Cost estimates for DOE personnel are not provided;

- One man-month is equivalent to 173 man-hours;

- The man-hour cost estimate is based on anticipated full-time equivalents necessary to perform the schedule subtasks; and

- The schedule developed assumes a start date of January 3, 1994. The task durations will remain the same if the start date is changed.

FIGURE 4.1
PREPARE A DELISTING PETITION
AND FINAL RULEMAKING TIMEFRAME

ID	Name	Duration
1	1.0 PREPARE DELISTING PETITION	279d
2	1.1 COMPILE WASTE MGMT. INFORMATION	3w
3	1.2 COMPILE PROCESS INFORMATION	5w
4	1.3 DEVELOP ANALYTICAL PLAN	3w
5	1.4 DEVELOP SAMPLING PLAN	5w
6	1.5 AGENCY REVIEW SAMPLING AND ANALYSIS	7w
7	1.6 FINALIZE SAMPLING AND ANALYSIS	3w
8	1.7 CONDUCT WASTE SAMPLING	6w
9	1.8 LABORATORY ANALYSIS/DATA VALIDATION	15w
10	1.9 PREPARE DRAFT PETITION	7w
11	1.10 LANL INTERNAL REVIEW	3w
12	1.11 PREPARE DRAFT FINAL PETITION	3w
13	1.12 DOE REVIEW	5w
14	1.13 PREPARE FINAL DELISTING PETITION	5w
15	1.14 SUBMIT DELISTING PETITION	0d

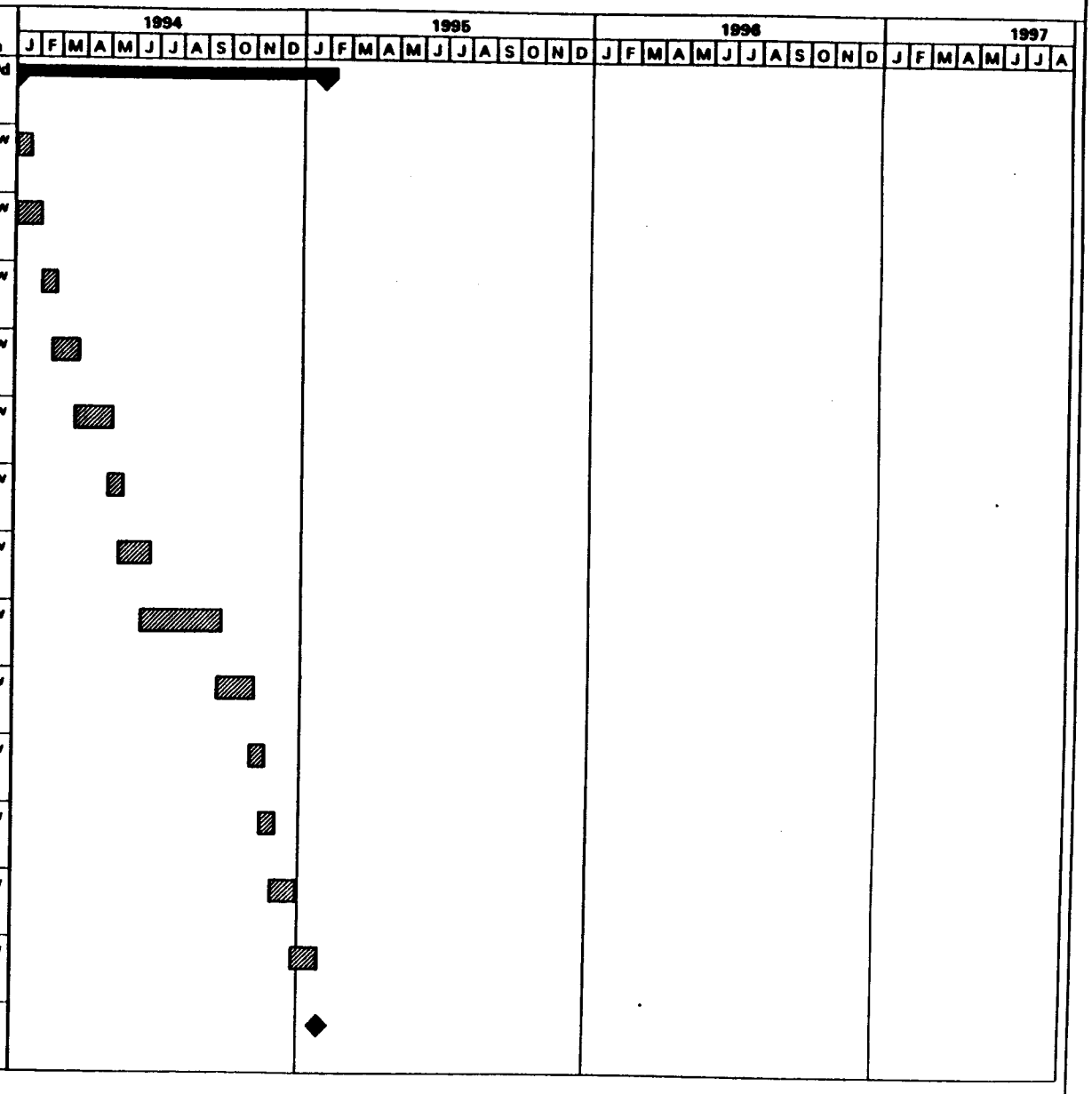

PROJECT LANL
DATE 10/19/93

Critical
Noncritical
Progress
Milestone
Summary
Rolled Up

1

FIGURE 4.1
PREPARE A DELISTING PETITION
AND FINAL RULEMAKING TIMEFRAME

ID	Name	Duration
16	2.0 AGENCY REVIEW/RULEMAKING	595d
17	2.1 AGENCY COMPLETENESS REVIEW	6w
18	2.2 LANL RESPONSE TO INFO. REQUEST	25w
19	2.3 AGENCY TECHNICAL REVIEW	30w
20	2.4 AGENCY DECISION PROMULGATION	30w
21	2.5 PUBLIC REVIEW OF PROPOSED RULEMAKING	10w
22	2.6 AGENCY FINAL NOTICE PREPARATION	23w
23	2.7 FEDERAL REGISTER PUBLICATION	0d

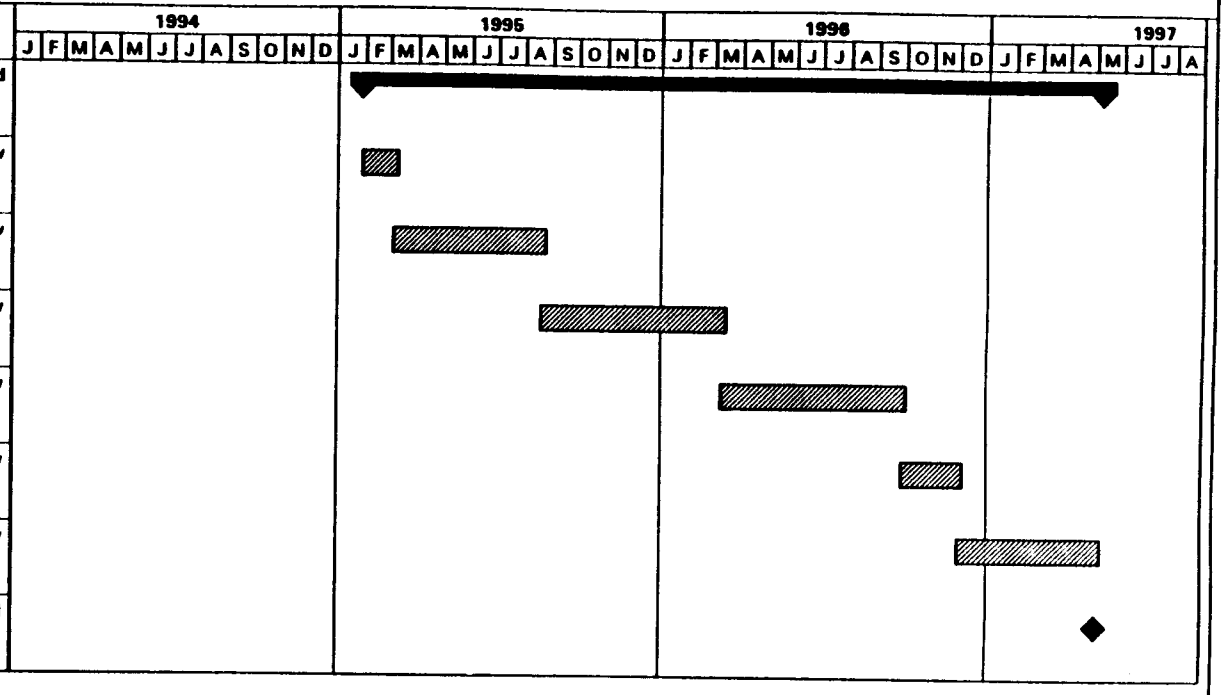

PROJECT LANL
DATE 10/19/93

Critical
Noncritical
Progress
Milestone
Summary
Rolled Up

Task 1.1 Compile Waste Management History

This task includes assembling information such as the regulatory basis for delisting; waste volumes and waste generating periods; past and present waste management methods, including disposal and storage; waste physical characteristics; and other background information necessary to give EPA a complete understanding of waste management practices. The bulk of this information is readily available. Therefore, this task consists mainly of presenting waste management history in a concise format.

Manhours Required - 80
Task Duration - 3 weeks
Labor Cost - $5,600
Other Costs - Not applicable (N/A)
Technical Expertise Required - Waste Operations Engineer familiar with RLWTP past and present operations.

Task 1.2 Compile Process Information

This task includes assembling waste generation and treatment process information. General information required includes facility business areas; products produced; production equipment specifications; materials used in the production process; regulatory status (RCRA permits, NPDES permits); waste processing description and schematics; waste processing equipment specifications; description of waste processing operations; and a description of waste management units. As with task 1.1 above, most of this information is readily available. Therefore, this task consists mainly of presenting the information in a concise and complete format.

Manhours Required - 86
Task Duration - 5 weeks
Labor Cost - $6,020
Other Costs - N/A
Technical Expertise Required - Waste Operations Engineer familiar with RLWTP past and present operations, Chemical Process Engineer, Regulatory Compliance Specialist.

Task 1.3 Develop Analytical Plan

Delisting petitions are required to contain analytical information from the waste being delisted. Following assembly of production and waste processing information, an analytical plan that identifies the constituents of concern and EPA-approved analytical methods is prepared. The waste-generating process is used as a basis for establishing constituents of concern. An engineering analysis of the waste generating process and the waste treatment process is required to ensure that the constituents of concern are appropriately identified. A pre-analytical meeting with DOE will also be planned and scheduled as part of this task. 40 manhours of preparation, and travel costs for a two-day meeting are included. The analysis plan also includes quality control (QC) protocols.

Manhours Required - 250
Task Duration - 3 weeks
Labor Cost - $17,500
Other Costs - travel for meeting with DOE, $2,000

Technical Expertise Required - Waste Operations Engineer familiar with RLWTP past and present operations, Analytical Chemist familiar with SW-846 (EPA, 1986) analytical methods, QC Chemist familiar with data quality and data validation methods.

Task 1.4 Develop Sampling Plan

A sampling plan must be included as part of the delisting petition. The sampling plan must include objectives, number of drums to be sampled, field sampling techniques, sampling personnel (sampling personnel must be qualified to perform the sampling), and sampling strategies to be employed. SW-846 (EPA, 1986) provides guidance on the number of samples required to appropriately characterize the waste, and sludge drum sampling techniques. Special health and safety procedures related to the low-level radioactive component of the RLWTP sludge should also be developed, to ensure that "as low as reasonably achievable" (ALARA) radiation exposure guidelines are met. Guidance for development of a sampling and analysis plan for the RLWTP sludge drums is provided in Appendix D of this study.

Manhours Required - 432
Task Duration - 5 weeks
Labor Cost - $30,240
Other Costs - N/A

Technical Expertise Required - Two Hazardous Waste Sampling Specialists familiar with drum and sludge sampling, Radiation Control Technician, Senior Technical Specialist familiar with sampling strategies employed for drum sampling.

Task 1.5 Agency Review of Sampling and Analysis Plan

EPA's delisting guidance manual recommends that the Sampling and Analysis Plan (SAP) be provided to EPA or State regulatory agency for preliminary review, before conducting waste sampling. The agency will provide comments on the development of the SAP, and recommend ways to improve the sampling and analysis. Preliminary agency review of the SAP, and revision of the SAP if necessary, avoids the risk of resampling and reanalyzing the waste if the SAP and results are found to be incomplete during review of the petition by the agency. There are no labor or other costs associated with this task.

Task Duration - 7 weeks

Task 1.6 Finalize Sampling and Analysis Plan

Following agency review of the sampling and analysis plan, comments will be incorporated.

Manhours Required - 173
Task Duration - 3 weeks
Labor Cost - $12,110
Other Costs - N/A

Technical Expertise Required - Analytical Chemist, Two Hazardous Waste Sampling Specialists familiar with drum and sludge sampling

Task 1.7 Conduct Waste Sampling

Once the SAP is finalized, the drums will be sampled. Sampling is completed by personnel familiar with hazardous waste sampling, sampling protocol, sample holding times, and other constraints. Based on experience conducting drum characterization, the following estimate is provided.

Manhours Required - 1,238
Task Duration - 5 weeks
Labor Cost - $86,660
Other Costs - Sampling Equipment - $2,500
- Personnel Protective Equipment - $2,500
- Air Monitoring Equipment - $500
- Radiation Protection Equipment - $500

Technical Expertise Required - Health and Safety Specialist familiar with radiation protection and hazardous waste field operations, Radiation Control Technician, Field Sampling Supervisor with experience leading field sampling teams, four field sampling technicians familiar with drum sampling techniques. All personnel must have OSHA 40-hour training for hazardous waste sites (29 CFR 1910).

Task 1.8 Laboratory Analysis/Data Validation

Waste samples are analyzed by a laboratory familiar with SW-846 methods. The laboratory must have an approved QC program that meets the data quality requirements outlined in the SAP. Analytical results are validated against the data quality requirements to ensure results will be acceptable to EPA.

Manhours Required - 1,038
Task Duration - 15 weeks
Labor Cost - $72,660
Other Costs - Analytical Laboratory - $60,000

Technical Expertise Required - Two Data Validation Chemists with experience in data validation of analytical data from SW-846 methods (EPA, 1986). Chemists must be familiar with analytical methods for metals, volatile organics, Toxicity Characteristic Leaching Procedure (TCLP), semi-volatile organics, and other methods identified in the SAP.

Task 1.9 Prepare Draft Petition

When validated results from the waste sampling and analysis are returned from the laboratory, the results will be tabulated and reduced, and the formal petition will be prepared for internal LANL review. The petition will include all of the information gathered during performance of the previous tasks, and will follow the EPA guidance. EPA provides a checklist of requested petition information in the delisting guidance manual (EPA, 1993). This checklist should be used to facilitate internal review and to ensure that all requested information is presented.

Manhours Required - 778
Task Duration - 7 weeks
Labor Cost - $54,460
Other Costs - N/A

Technical Expertise Required - Chemical Process Engineer familiar with RLWTP operations, two Regulatory Compliance Specialists familiar with delisting petitions and RCRA regulations.

Task 1.10 LANL Internal Review

The Laboratory will review the petition internally before transmittal to DOE for review.

Manhours Required - 173
Task Duration - 3 weeks
Labor Cost - $12,110
Other Costs - N/A
Technical Expertise Required - Personnel familiar with the RLWTP operation, regulatory compliance, chemical analysis, and waste sampling.

Task 1.11 Prepare Draft Final Petition

This task includes incorporation of comments resulting from the LANL internal review of the draft delisting petition.

Manhours Required - 80
Task Duration - 3 weeks
Labor Cost - $5,600
Other Costs - N/A
Technical Expertise Required - Regulatory Compliance Specialist familiar with delisting petitions.

Task 1.12 DOE Review

The DOE Los Alamos Area office and Albuquerque Field office will review the delisting petition before it is transmitted to EPA. There are no costs estimated for this task.

Task Duration - 8 weeks

Task 1.13 Prepare Final Delisting Petition

This task includes incorporation of comments from the DOE Los Alamos Area Office and Albuquerque Field Office into the delisting petition.

Manhours Required - 80
Task Duration - 5 weeks
Labor Cost - $5,600
Other Costs - N/A
Technical Expertise Required - Regulatory Compliance Specialist familiar with delisting petitions.

Task 1.14 Submit Final Delisting Petition

This task is a milestone for scheduling purposes. Based on this schedule, the delisting petition will be submitted twelve months following initiation of delisting activities. There are no costs associated with this task.

4.3.2 Delisting Petition Preparation Duration, Cost, and Manhour Summary

Total estimated duration, manhours, labor costs, and other costs associated with delisting the RLWTP sludge are summarized as follows:

Petition Preparation, EPA review and approval:
Petition Preparation Duration - 1 year, 1 month
EPA Review and Approval Duration - 2 years, 4 months
Total Labor Hours - 4,624
Total Labor Cost - $323,680
Total Other Costs - $68,000
Total Petition Preparation Cost - $391,680

Mixed waste storage cost for duration of petition process - $236,640
Final disposal as LLRW when petition is approved - $182,768

Total petition preparation, storage, and disposal - $811,088.

4.3.3 Agency Review and Rulemaking

Following submittal of the delisting petition to EPA, a final decision is typically reached in approximately two years (EPA, 1993). The work elements associated with EPA review of the delisting petition are presented in Figure 4.1 as Task 2.0. After submittal, EPA will assign a reviewer, and a completeness review will be conducted (Task 2.1). The completeness review will ensure that the information submitted in the petition is sufficient to allow EPA to make a decision on whether the waste can or cannot be delisted. EPA will determine if additional information is required, and request such information from LANL. If EPA determines that gathering data identified as insufficient during the completeness review will take 6 months or longer, the petition will be dismissed, and the delisting process starts over. Therefore, it is imperative that the information submitted with the petition be complete and undergo rigorous review prior to submittal.

LANL may be requested to submit additional information to EPA after the completeness review. For the purpose of estimating costs it was assumed that one LANL staff member will devote 216 hours over a period of five months, to provide additional information to EPA in response to the completeness review. The cost for this effort is estimated at $15,120. After responding to all EPA requests for additional information, LANL personnel will no longer be involved in the delisting process, as EPA will have sufficient information to process the petition.

EPA will then conduct a technical assessment of the petition, including an analysis of the fate and transport mechanisms and health risks associated with the waste constituents. Based on this review and analysis, EPA will issue a decision for internal review. If the decision to delist the waste is negative, EPA will give LANL the opportunity to withdraw the petition to avoid publication of negative findings in the Federal Register. A positive decision will undergo final review within EPA. Following EPA final review, the decision will be published in the Federal Register as a proposed rule. Publication as a proposed rule opens a public comment period of 45 days during which interested persons may submit written comments. After EPA addresses all public comments a final notice is published, and in most cases the delisting decision is effective on the date of publication.

4.3.4 Potential for "Fast-Track" Delisting

EPA's Waste Identification Branch, Hazardous Waste Delisting Section was contacted to determine if an accelerated delisting approval process exists for cases similar to the RLWTP sludge (i.e., significant evidence through knowledge of process, effective administrative controls, and historical sampling and analysis results showing that a waste is not hazardous). EPA indicated that review of delisting petitions is a formalized rulemaking procedure. Procedural review steps can not be skipped or shortened. The only opportunity to expedite the delisting review process is for the waste generator to provide a complete, concise petition ensuring relatively quick EPA completeness review, technical assessment, and final internal EPA review (*personal communication*, Chen, 1993). EPA would not estimate a minimum time frame for approval of such a petition.

EPA recommends submittal of a preliminary SAP, prior to initiation of waste sampling and analysis to ensure that sampling and analysis methods, and results will be acceptable. Preliminary approval of the SAP reduces the probability that EPA will request additional information during the technical assessment of the petition.

Finally, EPA indicated that there has never been a time period in which the petition review standards were less stringent than they are currently. EPA's Delisting Section typically has approximately 20 petitions at various points in the review process at all times, and all petitions receive equally rigorous review (*personal communication*, Chen, 1993).

While the probability of successfully delisting the RLWTP sludge is high, based on the precedents of previously delisted wastes, RLWTP process knowledge, and existing historical sampling and analysis data, the duration of the delisting process can not be estimated at less than 3 years.

4.4 Waste Disposal Options

4.4.1 Onsite Disposal of the RLWTP Sludge Drums as LLRW

Based on the discussions presented in Phases 1 and 3 of this study, the RLWTP sludge drums can be administratively relabeled as LLRW or delisted. After relabeling or delisting, the RLWTP sludge drums will be disposed of in LANL's LLRW landfill, at TA-54. The cost of delisting and onsite disposal as LLRW is summarized in Section 4.3.2.

The cost of relabeling is dependent upon LANL preparation, review, approval, and execution of a relabeling plan. As noted in the Phase 1 recommendations, LANL EM-7 upper management will determine the approval signature chain for a relabeling plan. LANL also intends to inform and obtain concurrence from DOE, EPA, and NMED for label changes (LANL EM-7, 1991). The time periods to obtain LANL-internal approval of, and agency concurrence with a relabeling plan are uncertain. However, the cost of relabeling will be significantly less than the cost of delisting. Relabeling eliminates delisting costs associated with:

- preparation and review of an RLWTP sludge drum SAP, and execution of sampling and analysis, estimated at $282,370;

- preparation and review of a delisting petition, estimated at $77,770; and

- continued storage of RLWTP sludge drums as mixed waste during LANL, DOE, and EPA delisting petition review periods of two and a half years, estimated at $236,640.

Assuming that a relabeling plan could be prepared in two man-months (346 hours), internally reviewed and approved in four man-weeks (160 hours), and executed in two man-months (346 hours), the cost of preparation and execution of a relabeling plan is estimated at $59,640. Adding the costs estimated for continued storage as mixed waste for a total of 12 months to obtain DOE, EPA, and NMED concurrence ($65,100), and onsite disposal as LLRW ($182,768), the total cost for relabeling and onsite disposal is estimated at $307,508.

4.4.2 Onsite Disposal as Mixed Waste

In the unlikely event that a delisting petition is denied by EPA, or if LANL upper management wishes to forego the delisting process, the RLWTP sludge could remain in storage until completion of a planned onsite mixed waste landfill. Construction of a mixed waste landfill is scheduled to begin in 1996 (Lussiez, 1992). Onsite disposal as mixed waste will require:

- continued storage of the RLWTP sludge drums as mixed waste until completion of the onsite mixed waste landfill;

- development of a waste analysis plan, in accordance with Land Disposal Restrictions (LDRs) found in 40 CFR 268.7;

- sampling and analysis of the RLWTP sludge to ensure that LDR treatment standards (40 CFR 268, Subpart D) are met; and

- treatment of the RLWTP sludge prior to disposal, if LDR treatment standards are not met.

The scheduled duration and estimated cost to (1) develop a waste analysis plan, (2) sample and analyze the waste, and (3) determine if LDR treatment standards are met, are similar to the development and implementation of the delisting SAP. Based on the schedule and cost developed for the delisting SAP, the time period for development and implementation of a waste analysis plan is estimated at nine months, at a cost of $282,370. The time period from initiation of waste analysis to final disposal of the RLWTP sludge drums is primarily dependent upon the opening of the mixed waste landfill, but is estimated at four years.

Onsite disposal as mixed waste avoids the costs of preparation and EPA approval of a delisting petition, however, the cost of continued storage until the onsite mixed waste landfill is open could be equal to or greater than the storage cost for the duration of the delisting process. The cost of disposal as mixed waste is estimated at $100 per cubic foot (*personal communication*, Parker, 1993), and the contents of the 1,252 RLWTP sludge drums is estimated at 9,205 cubic feet, resulting in a mixed waste disposal cost of $920,500. The cost of using mixed waste landfill space for a waste that could very likely be delisted or relabeled and disposed of as LLRW is less tangible, but weighs against any cost advantage associated with not pursuing the delisting process.

The cost of onsite disposal as mixed waste is estimated as follows:

Preparation and implementation of waste analysis plan - $282,370
Storage as mixed waste, for 4 years (minimum) - $280,589
Disposal as mixed waste - $920,500
Total cost of onsite mixed waste disposal - $1,483,459.

4.4.3 Offsite Disposal as Mixed Waste

In the unlikely event that a delisting petition is denied by EPA, or if LANL upper management wishes to forego the delisting process, the RLWTP sludge could be disposed of as mixed waste, at an offsite facility. Offsite disposal as mixed waste will require:

- an exemption from DOE Order 5820.2A, *Waste Management* (Order 5820.2A requires all LLRW, including mixed waste, to be disposed of at DOE facilities);

- development of descriptions of waste generating processes, and waste characteristics;

- sampling and analysis to determine if the RLWTP sludge meets the mixed waste disposal facility's waste acceptance criteria;

- pretreatment of the RLWTP sludge, in the event that sampling and analysis reveals that the sludge does not meet waste acceptance criteria;

- continued storage of the RLWTP sludge drums as mixed waste until sampling and analysis is complete; and

- packaging and shipment of the RLWTP sludge drums in accordance with Department of Transportation (DOT) regulations found in 49 CFR 171-179.

4.4.3.1 Exemption from DOE Order 5820.2A

Obtaining an exemption from DOE Order 5820.2A will require:

- description of the waste, to ensure that the waste is in compliance with the offsite disposal facility's licenses;

- a National Environmental Policy Act (NEPA) analysis of environmental issues related to waste preparation, transportation, treatment, and disposal; and

- an audit of the offsite waste disposal facility that verifies the adequacy of all licenses and permits (Santa Fe Engineering, 1993).

Envirocare of Utah, Inc. has obtained an exemption from DOE Order 5820.2A, allowing Envirocare to accept and dispose up to 100,000 cubic feet of waste per DOE site, without the audit requirement described above (*personal communication*, Parker, 1993). Envirocare is the only mixed waste disposal facility that is licensed to receive waste similar to the RLWTP sludge. The time period for development of waste characterization, and NEPA analysis is estimated at 9 months (Santa Fe Engineering, 1993). The cost associated with obtaining an exemption from DOE Order 5820.2A is estimated at $36,330, based on 3 man-months of required effort.

4.4.3.2 Waste processing and waste characterization data

The waste processing and waste characterization data required for acceptance at an offsite disposal site closely parallels the information that must be developed in support of a delisting petition. Examples of waste acceptance criteria and waste profile records were obtained from Envirocare of Utah, Inc., and are provided in Appendix D. Based on the time periods and costs estimated for the development of waste stream descriptions, SAP, and sampling and analysis for delisting, the parallel effort for offsite disposal as mixed waste has an estimated duration of 9 months, at a cost of $293,990.

4.4.3.3 Pretreatment of RLWTP sludge

RCRA LDRs (40 CFR 268 SUbpart D) provide required treatment standards that must be met before a listed waste can be land disposed. Standards are provided for constituent concentrations in waste extract, as determined through TCLP. Treatment technology-based standards for specific listed wastes are also provided.

The RLWTP sludge is sampled monthly for determination of the toxicity characteristic. Results of these analyses have shown that the sludge does not exhibit the toxicity characteristic (Brown, 1993). Additionally, 40 CFR 268.30(a)(3) excludes spent solvent wastes that are "solvent/water mixture, solvent-containing sludge or solid, or solvent-contaminated soil (non-CERCLA or RCRA corrective action) containing less than 1 percent total F001-F005 solvent constituents" from land disposal restrictions. Therefore, it is unlikely that the RLWTP sludge will require pretreatment for land disposal as mixed waste. If pretreatment is required, Envirocare has the capability and RCRA-required licenses for pretreatment of mixed waste.

4.4.3.4 Continued storage as mixed waste

Assuming that the development of waste processing and waste characterization data and the development of documentation for exemption from DOE Order 5820.2A can occur concurrently, the duration of continued storage of the RLWTP sludge as mixed waste is estimated at nine months. The cost of continued storage is estimated at $48,800.

4.4.3.5 Packaging and shipment of mixed waste

The RLWTP sludge drums must meet DOT packaging requirements found in 49 CFR 171-179. The unit cost of packaging preparation and shipment of the RLWTP sludge drums by truck to Envirocare is estimated at $120 per cubic foot, for a total packaging and shipping cost of $1,104,600 (*personal communication*, Parker, 1993).

4.4.3.6 Final disposal as mixed waste

When the RLWTP sludge drums are received at the offsite mixed waste disposal facility, the drums will be inspected prior to final disposal. Representative samples of the waste will be analyzed by the disposal facility. Analyses include pH, paint filter liquids test, hydrogen cyanide, hydrogen sulfide, Toxicity Characteristic Leaching Procedure (TCLP) for 8 metals and 32 organic compounds, gamma spectroscopy, and isotopic analysis. The time period for inspection and analysis is estimated at 5 weeks. The cost of disposal is estimated at $100 per cubic foot (personal communication, Parker, 1993). Assuming the total volume of RLWTP sludge is 9,205 cubic feet (1,252 55-gallon drums) the final disposal cost totals $920,500.

4.4.3.7 Summary cost and schedule for offsite mixed waste disposal

The cost for offsite disposal of the RLWTP as mixed waste is estimated as follows:

Develop documentation for exemption from DOE 5820.2A - $36,330
Develop SAP, and execute sampling and analysis - $293,990
Continued storage as mixed waste - $48,800
Packaging and shipment - $1,104,600
Final disposal as mixed waste - $920,500
Estimated total cost for offsite mixed waste disposal - $2,404,220
Duration for all tasks associated with offite disposal - 10 months

4.5 PHASE 3 CONCLUSIONS

The probability of EPA approval of a delisting petition for the RLWTP sludge is high, based on similarity to previously delisted wastes, knowledge of RLWTP process, and existing RLWTP influent and effluent analytical results.

The cost of delisting and disposing of the RLWTP sludge drums onsite as LLRW is estimated at $811,088. The duration of the delisting process is estimated at 3 years, 5 months (see Figure 4.1). Estimated costs and durations for all delisting and disposal options are presented in Table 4.1.

The cost of administratively relabeling and disposing of the RLWTP sludge drums onsite as LLRW is estimated at $307,508. The duration of the relabeling process is estimated at 12 months.

The cost of disposal of the RLWTP sludge at the planned onsite mixed waste landfill is estimated a $1,483,459. The duration of the onsite mixed waste disposal process is estimated at 4 years. The opening date of the onsite mixed waste landfill is the primary concern in determination of the duration of the onsite mixed waste disposal process. Additional costs in excess of $75,000 per year, associated with continued storage of the RLWTP sludge drums, will be incurred if the mixed waste landfill opening is delayed past 1997.

The cost of disposal of the RLWTP sludge at an offsite mixed waste disposal facility is estimated at $2,404,220. The duration of the mixed waste disposal process is estimated at 10 months.

TABLE 4.1
Delisting and Disposal Options for RLWTP Sludge Drums
Summary of Costs and Duration

OPTION	COSTS					DURATION
	LABOR	OTHER DIRECT	WASTE STORAGE	WASTE DISPOSAL	TOTAL	
Submit delisting petition to EPA, store drums until EPA approval, then dispose as LLRW.	$323,680	$68,000	$236,640	$182,768	$811,088	41 months
Administratively relabel drums, store drums until relabeling is complete, then dispose as LLRW.	59,640	0	65,100	182,768	307,508	12 months
Dispose drums as mixed waste onsite, when the planned mixed waste landfill opens.	282,370	0	280,589	920,500	1,483,459	48 months
Dispose drums as mixed waste, at a permitted mixed waste facility.	330,320	1,104,600	48,800	920,500	2,404,220	10 months

4.6 PHASE 3 RECOMMENDATION

In the event that the RLWTP sludge drums are not administratively relabeled and disposed of onsite as LLRW (as recommended in Phase 1 of this study), a delisting petition should be prepared. Upon EPA approval of the delisting petition, the RLWTP sludge drums should be disposed of onsite as LLRW.

APPENDIX A

Administrative Requirement 10-1, Koenig memorandum (27 May 1988), Midkiff memorandum (26 February 1991), 40 CFR 433.11, Definition of Total Toxic Organics

Introduction

Laboratory and Department of Energy (DOE) policies require that the volume of radioactive liquid waste generated by Laboratory operations be reduced to a minimum and that the radioactivity of waste to the environment be kept at a level as low as reasonably achievable (ALARA). This document summarizes the requirements for managing and disposing of radioactive liquid waste at the Laboratory. Additional guidance is available in Technical Bulletin (TB) 1001, "Radioactive Liquid Waste Collection System," and TB 1002, "Radioactive Liquid Waste Treatment and Disposal."

Definitions

Batch Volume—An amount (up to a few thousand liters) of radioactive liquid waste that is segregated from the main radioactive waste stream because it needs separate treatment or because the generating site is not served by the radioactive liquid waste pipeline.

Radioactive Liquid Waste—Liquid waste contaminated or potentially contaminated with radionuclides.

Radioactive Liquid Waste Pipelines—Pipelines that carry radioactive liquid waste from various Laboratory sites to liquid waste storage and treatment facilities. (The network of pipelines was formerly referred to as the acid or industrial waste sewer system.) The Waste Management Group (HSE-7) operates the waste treatment plants and maintains the radioactive liquid waste collection system from the point where a building connects to the radioactive liquid waste pipeline. See the appendix for additional information.

Radioactive Liquid Waste Transport—The transfer of radioactive liquid waste from Laboratory sites that are not served by radioactive liquid waste pipelines and of materials that are restricted from disposal in the pipeline to liquid waste storage and treatment facilities.

Overall Responsibility

Unless otherwise stated in this document, line managers must ensure that the requirements specified herein are met.

Waste Management Review

Standard Operating Procedures. Each operation involving the generation or handling of radioactive liquid waste requires a standard operating procedure (SOP), which must be prepared, reviewed, and approved as specified in Administrative Requirement (AR) 1-3, "Standard Operating Procedures and Special Work Permits."

In addition to the review required by AR 1-3, the Waste Management Group (HSE-7) must review and approve SOPs involving the generation of radioactive liquid waste before they are implemented.

Annual Review. To ensure compliance with SOPs and appropriate regulations, as well as to determine where program improvements are needed, HSE-7 annually performs field operational reviews of these SOPs.

Waste Management Coordinator

A Waste Management Coordinator must be identified for each group or division that generates radioactive liquid waste. At some sites, one person may represent several groups. The Waste Management Coordinator shall be the primary contact between generators and HSE-7 and should have the authority to approve of and implement waste management matters for the group or division represented. The Waste Management Coordinator may be the same person as the Hazardous Waste Coordinator identified in AR 10-3, "Chemical, Hazardous, and Mixed Waste."

The coordinator must ensure that

- every operation that generates radioactive liquid waste is covered in an SOP;
- operating personnel are familiar with pertinent administrative requirements, SOPs, and waste management regulations;
- the volume of the radioactive liquid waste is kept to a minimum;
- the radioactivity level of liquid waste is kept to a minimum and does not exceed HSE-7 recommended limits;
- hazardous waste as defined by the Environmental Protection Agency (EPA) in the Resource Conservation and Recovery Act (RCRA) and the Toxic Substances Control Act (TSCA) are not discharged into the radioactive liquid waste pipeline;
- waste streams not identified and listed under the Laboratory's National Pollutant Discharge Elimination System (NPDES) permit are not discharged into the radioactive liquid waste pipeline;
- HSE-7 is notified immediately of unusual or accidental discharges that may violate waste management regulations;
- HSE-7 is contacted to coordinate collection of liquid waste that does not meet requirements for discharge to the radioactive liquid waste pipeline (see "Disposal Restrictions"); and
- radioactive liquid waste is not released to any other waste collection system. HSE-7 personnel can assist in identifying connections to the radioactive liquid waste pipeline; also see the appendix.

Disposal Methods

At Buildings Connected to the Radioactive Liquid Waste Pipeline. Radioactive liquid waste (except as described under "Disposal Restrictions") must be discarded into sinks or drains that are connected to the radioactive liquid waste pipeline or to special storage tanks.

At Buildings Not Connected to the Radioactive Liquid Waste Pipeline. Radioactive liquid waste generated at sites not connected to the radioactive liquid waste pipeline or to special storage tanks must be collected in containers approved by the Department of Transportation (DOT) and transported to one of the treatment plants. Contact HSE-7 for container specifications.

Disposal Restrictions

Radioactivity Limits. Waste-generating groups must make special arrangements with HSE-7 personnel for the disposal of radioactive liquid waste having an activity > 0.5 μCi/liter. In the case of acid and alkaline process waste from TA-55-4, total

alpha concentration is limited to 60 µCi/liter for acid waste and to 4500 µCi/liter for alkaline waste. Generators of such waste must provide HSE-7 with weekly summaries of volumes and activity levels of each of the wastes discharged.

Solvents, Oils, and Liquid Chemical Wastes. Solvents, oils, and certain liquid chemical waste must not be discarded into the sinks or drains connected to the radioactive liquid waste pipeline. See AR 10-2, "Low-Level Radioactive Solid Waste," and AR 10-3, "Chemical, Hazardous, and Mixed Waste." For specific guidance on RCRA, TSCA, and NPDES, contact HSE-7 or the Environmental Protection Group (HSE-8).

New Connections to the Radioactive Liquid Waste Pipeline

New connections to the radioactive liquid waste pipeline must meet specific design criteria. When new connections are proposed, HSE-7 and HSE-8 should be consulted early in the project to ensure that all criteria are met. HSE-7 provides typical specifications, drawings, etc., for the pipeline, manholes, and electronics; HSE-8 provides NPDES permit requirements.

Radioactive Liquid Waste Transport

The Waste Management Coordinator shall arrange radioactive liquid waste transport with HSE-7. Before they are transported, containers of radioactive liquid waste must be monitored and tagged. The method of tagging and transport must be consistent with requirements in AR 3-5, "Shipment of Radioactive Materials," and the *Hazardous Materials Transportation Manual*. A properly completed Disposal of Batch Liquid Waste (ES&H Form 10-1A) must accompany the shipment, and all packages must have the proper DOT shipping labels attached to the transfer containers.

References

"Authorization to Discharge Under the National Pollutant Discharge Elimination System," Environmental Protection Agency, Permit Number NM28355, effective January 31, 1990.

"Chemical, Hazardous, and Mixed Waste," Administrative Requirement 10-3, in *Environment, Safety, and Health Manual*, Los Alamos National Laboratory Manual, Chapter 1 (most recent edition).

"Flammable Liquids," Technical Bulletin 601, in *Environment, Safety, and Health Manual*, Los Alamos National Laboratory Manual, Chapter 1 (most recent edition).

Hazardous Materials Transportation Manual, Los Alamos National Laboratory document (most recent edition).

"Low-Level Radioactive Solid Waste," Administrative Requirement 10-2, in *Environment, Safety, and Health Manual*, Los Alamos National Laboratory Manual, Chapter 1 (most recent edition).

"Radiation Protection of the Public and the Environment," Department of Energy Order 5400.5 (February 8, 1990).

"Radioactive Liquid Waste Collection System," Technical Bulletin 1001, in *Environment, Safety, and Health Manual*, Los Alamos National Laboratory Manual, Chapter 1 (most recent edition).

APPENDIX B

Historical (1988 - 1992) Influent Sampling Results, Statistical Analysis of Historical Sampling Results, EPA Guidance for Statistical Analysis (EPA SW-846, 1986)

2.0 PHASE 1 - ANALYSIS OF ANALYTICAL DATA TO JUSTIFY RELABELING THE RLWTP SLUDGE

2.1 Review of Historical Data

2.1.1 Sampling Locations and Routine Analyses

RLWTP influent and effluent have been sampled at several locations in the treatment process, as depicted in Figure 1.2. RLWTP influent (sampling location 1 on Figure 1.2) is sampled and analyzed for metals concentrations and radionuclide activity. Since December 1988, the RLWTP influent has also been sampled and analyzed for volatile and semivolatile organic compounds (VOCs and SVOCs). A sampling port between the 75,000-gallon tank and the clarifiers (sampling location 2) is also used for collection of samples when the plant is operating.

RLWTP liquid effluent (sampling location 3) is sampled monthly to support NPDES permit compliance. The RLWTP NPDES permit requires monitoring of ammonia, chemical oxygen demand, total suspended solids, cadmium, chromium, copper, iron, and zinc. Monitoring the concentration of total toxic organics in liquid effluent, as required in the Code of Federal Regulations, Title 40, Chapter 433, Part 11 [40 CFR 433.11 (e)], has only recently been added to the RLWTP NPDES requirements (pers. comm., Steve Rae, May 1993). The term "total toxic organics" means the summation of all quantifiable values greater than 0.01 milligrams per liter for a list of 111 toxic organics (see Appendix A). The RLWTP discharge limit for total toxic organics is 1 milligram per liter. RLWTP dewatered sludge (sampling location 4) is routinely sampled to ensure the radioactive constituents are at low levels, and for determination of the toxicity characteristic. Sludge sampling and routine analysis is performed for the radionuclides U^{235}, Pu^{238}, Pu^{239}, and Am^{241}, and heavy metals.

While some historical (1988-1992) RLWTP liquid effluent sampling and analysis results are available, these results do not significantly contribute to the determination of historical influent characterization. The RLWTP NPDES permit did not require analysis of liquid effluent for VOCs or SVOCs in the 1988 through 1992 timeframe. Similarly for the historical sludge sampling results, the only requirement for sampling and analysis of RLWTP sludge is to ensure the radioactive constituents are at low levels. The historical sludge data does not significantly contribute to the historical influent characterization. However, the RLWTP sludge sampling results do support the conclusion that the sludge does not exhibit any of the RCRA-defined hazardous characteristics of ignitability, corrosivity, reactivity, or toxicity (Brown, 1993).

The RLWTP influent sampling and analysis program, from 1988 to 1992 and the sampling protocol utilized from February to May 1993 provide the key data for review and evaluation.

2.1.2 RLWTP Influent Automatic Sampling Procedure

A Manning automatic sampler (autosampler) was installed in 1988 to provide the influent waste stream characterization data needed to confirm the presence or absence of regulated constituents at concentrations requiring classification as mixed waste. This device was in use through May 1992, when it was replaced (see Section 2.2.1). The Manning autosampler drew time-composited samples from the RLWCS immediately upstream from the 75,000-gallon tank. Samples were collected for routine analysis of

metals and radionuclides on days when the plant was in operation. Samples were drawn every 15 minutes via the Manning vacuum pump, and collected in a 10-gallon, covered tank. A 2-gallon aliquot was drawn by the plant operator after agitating the 10-gallon tank, with an electric mixer, for 3 minutes. The 2-gallon aliquot was split for analysis of radionuclides, heavy metals. If the RLWTP was not in operation, the 10-gallon compositing tank was drained and cleaned. Thus, the samples collected were representative of influent composited throughout a 24-hour period. The Manning samples were analyzed for VOCs and SVOCs, on a monthly basis.

2.1.3 Analytical Results - December 1988 through May 1992

Thirty-three samples were collected by RLWTP plant operators from the Manning autosampler 10-gallon composite tank, and analyzed for VOCs and SVOCs by the LANL analytical laboratory (EM-9), from December 1988 through May 1992. Fourteen compounds that could have originated as RCRA F001, F002, F004, or F005 listed wastes [40 CFR 261.31 (a)] were detected in RLWTP influent samples. These compounds are listed in Table 2.1. The analytical results are included in Appendix B. Although compounds (VOCs and SVOCs) that could have originated as F-listed wastes were detected, there were no detections of concentrations at or above regulatory thresholds. These data are summarized in Table 2.2.

In addition to the RLWTP influent samples collected using the Manning autosampler, 14 samples from the sampling port between the 75,000-gallon tank and the clarifiers (plant samples), 13 liquid effluent samples, and 26 effluent sludge samples were collected. Compounds detected in these samples which could have originated as F-listed wastes are also listed in Table 2.1. The concentrations of regulated constituents in plant, liquid effluent, and sludge samples provide no evidence of hazardous levels in the RLWTP influent.

2.1.4 Evaluation of Historical Autosampler Data

Evaluation of analytical results obtained from Manning samples for December 1988 through May 1992 focused on two issues. First, the data must show that an appropriate sample population for accurate waste stream characterization was obtained, in accordance with requirements for sampling design, development, and implementation found in *Test Methods for Evaluating Solid Waste*, SW-846 (EPA, 1986). SW-846 states that "the appropriate number of samples...means the minimal number of samples needed to demonstrate that the upper limit of the confidence interval for the true mean is less than the applicable regulatory threshold". Second, the data must show, per SW-846, that the concentrations of regulated constituents detected have not exceeded regulatory thresholds. SW-846 also requires the data to show that, within the limits of an 80-percent confidence interval, the maximum concentration of any compound of concern is below the regulatory threshold. If the sample population is appropriate and regulatory thresholds are not equalled or exceeded, the waste stream is regulated as solid waste, rather than a hazardous waste. Historical sample analysis results, statistical evaluations of results, and relevant guidance from SW-846 are presented in Appendix B.

SW-846 provides guidance in Section 9.1.1.4.1 on the appropriate number of composite samples to be collected from solid waste. In order to determine the

appropriate number of samples required per SW-846, sampling results for all fourteen compounds detected (Table 2.1), were evaluated. As all data sets exhibited negative binomial distribution, the arcsine transformation was performed prior to statistical analysis, as required in SW-846, Section 9.1.1.2.

The calculation of appropriate number of samples (SW-846, Table 9-1, equation 8, and Section 9.1.1.2) based on regulated constituent detections indicated that one sample would be sufficient to characterize the RLWTP influent. SW-846 also recommends that "a somewhat greater number of samples than indicated..." should be collected as a precaution against inaccurate estimates of mean contaminant concentrations (Section 9.1.1.2). The 33 samples collected and analyzed from December 1988 through May 1992 meet this recommendation. An appropriate number of samples to characterize the RLWTP influent from December 1988 through May 1992 was collected and analyzed in accordance with SW-846.

To determine if chemical contaminants are present at hazardous concentrations SW-846, Section 9.1.1.1, states the following requirements:

"... for each chemical contaminant of concern, a confidence interval (CI) is described within which the true mean occurs if the sample is representative, which is expected of about 80 out of 100 samples. The upper limit of the 80% CI is then compared with the appropriate regulatory threshold. If the upper limit is less than the regulatory threshold, the chemical contaminant is not considered to be present in the waste at a hazardous level."

The upper limit of the 80% CI was determined for each of the 14 regulated constituents detected in the RLWTP influent (Table 2.1) from December 1988 through May 1992. The upper limit of the 80% CIs for all contaminants of concern were found to be less than the respective regulatory thresholds (40 CFR 261.3). Thus, none of the chemical contaminants are considered to be present in the RLWTP influent at a hazardous level.

2.2 Current Influent Sampling

2.2.1 Influent Sample Collection by Positive-Displacement Autosampling

The data resulting from analysis of samples collected by the Manning autosampler provide no indication of the presence of regulated constituents (VOCs/SVOCs) in the RLWTP influent above the 1 ppm or 25 ppm regulatory limits, as defined in 40 CFR 261.3(a)(2)(iv)(A) and (A)(2)(iv)(B), from December 1988 through May 1992. A second autosampler, manufactured by ISCO, was installed in May 1992. The ISCO autosampler was installed to provide further definitive evidence that the RLWTP influent is not hazardous. The ISCO autosampler draws time-composited samples by positive displacement, as opposed to the Manning which uses a vacuum pump to draw samples. The ISCO autosampler also composites samples in a sealed, refrigerated vessel. The potential for volatilization of VOCs or SVOCs from the ISCO samples is minimal.

2.2.2 Regulatory Review of Acceptable Sample Collection Methods

RCRA regulations and SW-846 were reviewed to ensure that the results obtained from the ISCO autosampler are acceptable to regulatory agencies. There is no RCRA regulation that specifies acceptable or unacceptable autosampling methods for

3

wastewater sample collection. However, compliance with SW-846, Sampling Considerations (Section 4.1) for organic analytes is required by 40 CFR 261 Appendix III. The referenced section of SW-846 addresses the necessity of sealing the collected samples in screw-cap jars or vials with Teflon-lined caps, but does not specifically address autosampler collection or compositing methods.

Section 9.2.2.4 of SW-846 describes use of vacuum pumps and positive displacement pumps for sample collection. The description of vacuum pumps states "their use may result in out-gassing of dissolved gasses or volatile organics and is therefore limited in many sampling applications". The description of positive displacement pumps states "the potential for aerating or stripping volatile organics" is minimized.

No definitive statement on the acceptability of autosampling technique was found in RCRA regulations or SW-846. However, the requirements for use of sealed jars or vials for collection of organic samples, and the description of positive-displacement pumps make it clear that the ISCO autosampler collection method is acceptable to regulatory agencies.

2.2.3 Triple Parallel Influent Sampling Protocol

The ISCO autosampler was utilized in lieu of the Manning autosampler from May 1992 to February 1993. From February 1993 through May 1993, both autosamplers were used simultaneously. Parallel samples were collected during this 4-month period with the objective of determining the validity the Manning data collected from December 1988 through May 1992. Concurrent with the ISCO and Manning sample collection, plant samples were collected, via the sampling port in the line between the 75,000-gallon tank and the clarifiers. The plant samples were collected primarily as additional validation of historical data. The plant samples reflect the extended residence time and agitation of the RLWTP influent in the 75,000-gallon equalization/neutralization tank prior to sampling (in contrast to the ISCO and Manning samples), and provide representation of the maximum VOC/SVOC concentrations reaching the treatment process. This protocol was referred to as triple-parallel sample collection.

2.2.4 Triple-Parallel Protocol Sampling Results

Fifty-five sets of samples from the ISCO and Manning autosamplers, and immediately downstream from the 75,000-gallon tank (plant samples) were collected and analyzed from February to May 1993. Six compounds which could have originated as RCRA F-listed wastes were detected. These compounds were 2-butanone, carbon disulfide, methylene chloride, toluene, chlorobenzene, and 1,1,1-trichloroethane. A total of 97 detections of these compounds were reported for the 55 Manning, 55 ISCO, and 55 plant samples, and are summarized in Table 2.3. No detections of regulated constituents were above regulatory limits.

2.2.5 Evaluation of Triple Parallel Sampling Results

2.2.5.1 Manning and ISCO Parallel Sampling Results

In order to determine if the Manning and ISCO autosampler sampling results can be considered statistically equivalent during the performance of the triple-parallel sampling protocol (thus validating the historical influent data), the data were analyzed using a

1,1,1 – Trichloroethane
Detected in Influent

Sample Number	Date Sampled	Level Detected	Laboratory Uncertainty	Level of Quantitation
89.10027	12/14/88	25.5	7.65	2
89.10029	12/15/88	274.3	137.15	2
89.10030	12/15/88	53.8	16.14	2
89.10032	12/19/88	4223	2111.5	2
89.10033	12/22/88	2887.5	1443.75	2
89.10034	12/22/88	2885.9	1442.95	2
89.17434	10/31/89	130	39	10
89.17435	11/02/89	450	135	10
89.17627	11/07/89			10
89.17628	11/09/89			10
89.17736	11/14/89	41	12.3	10
89.17737	11/16/89	40.2	12.06	10
89.18112	12/04/89			2
89.18113	12/04/89			2
90.10158	01/11/90	12.4	3.7	5
90.10314	01/17/90			5
90.11174	02/25/90			5
90.15355	06/26/90			5
90.17442	09/13/90	90	27	5
90.19511	11/28/90			5
91.01152	02/08/91			5
91.01889	03/13/91	110.1	33	5
91.03432	04/25/91			5
91.05134	06/18/91			5
91.06507	07/16/91	9.1	2.73	5
91.10620	09/26/91	68	20.4	5
92.01353	02/03/92			5
92.02346	03/02/92			5
92.06097	05/01/92			5
92.06199	05/05/92			5
92.06446	05/06/92			5
92.06445	05/06/92			5
92.06447	05/06/92			5

Number of sampling events	33
Number of detected values	15
Mean of detected values	753.4
Standard deviation	1371.0
Minimum value detected	9.1
Maximum value detected	4223.0
3x standard deviation	4113.0
Maximum value detected + 3x STD	8336.0
Regulatory Limit	25000

5

1,1,2-Trichloroethane
Detected in Influent

Sample Number	Date Sampled	Level Detected	Laboratory Uncertainty	Level of Quantitation
89.10027	12/14/88			2
89.10029	12/15/88	71.2	21.36	2
89.10030	12/15/88	71.1	21.33	2
89.10032	12/19/88			2
89.10033	12/22/88			2
89.10034	12/22/88			2
89.17434	10/31/89			10
89.17435	11/02/89			10
89.17627	11/07/89			10
89.17628	11/09/89			10
89.17736	11/14/89			10
89.17737	11/16/89			10
89.18112	12/04/89			2
89.18113	12/04/89			2
90.10158	01/11/90			5
90.10314	01/17/90			5
90.11174	02/25/90			5
90.15355	06/26/90			5
90.17442	09/13/90			5
90.19511	11/28/90			5
91.01152	02/08/91			5
91.01889	03/13/91			5
91.03432	04/25/91			5
91.05134	06/18/91			5
91.06507	07/16/91			5
91.10620	09/26/91			5
92.01353	02/03/92			5
92.02346	03/02/92			5
92.06097	05/01/92			5
92.06199	05/05/92			5
92.06446	05/06/92			5
92.06445	05/06/92			5
92.06447	05/06/92			5

Number of sampling events	33
Number of detected values	2
Mean of detected values	71.15
Standard deviation	0.07
Minimum value detected	71.10
Maximum value detected	71.20
3x standard deviation	0.21
Maximum value detected + 3x STD	71.41
Regulatory Limit	1000

Carbon
Disulfide
Detected in Influent

Sample Number	Date Sampled	Level Detected	Laboratory Uncertainty	Level of Quantitation
89.10027	12/14/88	1258.3	629.15	10
89.10029	12/15/88	4287.2	2143.6	10
89.10030	12/15/88	3345.3	1672.65	10
89.10032	12/19/88	7374.6	2212.38	10
89.10033	12/22/88	5982.9	2991.45	10
89.10034	12/22/88	6293.5	3146.75	10
89.17434	10/31/89			50
89.17435	11/02/89			50
89.17627	11/07/89			10
89.17628	11/09/89			10
89.17736	11/14/89			10
89.17737	11/16/89			10
89.18112	12/04/89			10
89.18113	12/04/89			10
90.10158	01/11/90	11	3.3	5
90.10314	01/17/90	160	48	5
90.11174	02/25/90	11.6	3.5	5
90.15355	06/26/90			5
90.17442	09/13/90			5
90.19511	11/28/90			5
91.01152	02/08/91			5
91.01889	03/13/91			5
91.03432	04/25/91			5
91.05134	06/18/91			5
91.06507	07/16/91			5
91.10620	09/26/91			5
92.01353	02/03/92			5
92.02346	03/02/92			5
92.06097	05/01/92			5
92.06199	05/05/92			5
92.06446	05/06/92			5
92.06445	05/06/92			5
92.06447	05/06/92			5

Number of sampling events	33
Number of detected values	9
Mean of detected values	3191.6
Standard deviation	2943.0
Minimum value detected	11.0
Maximum value detected	7374.6
3x standard deviation	8829.0
Maximum value detected + 3x STD	16203.6
Regulatory Limit	25000

Methylene
Chloride
Detected in Influent

Sample Number	Date Sampled	Level Detected	Laboratory Uncertainty	Level of Quantitation
89.10027	12/14/88	556.4	278.2	2
89.10029	12/15/88	1727.6	863.8	2
89.10030	12/15/88	1414.3	707.15	2
89.10032	12/19/88	1411.4	705.7	2
89.10033	12/22/88	1215.6	607.8	2
89.10034	12/22/88	1228.7	614.35	2
89.17434	10/31/89			10
89.17435	11/02/89			10
89.17627	11/07/89			10
89.17628	11/09/89			10
89.17736	11/14/89			10
89.17737	11/16/89			10
89.18112	12/04/89			2
89.18113	12/04/89			2
90.10158	01/11/90	25.5	7.7	5
90.10314	01/17/90	26.3	7.9	5
90.11174	02/25/90	6500	1950	5
90.15355	06/26/90			5
90.17442	09/13/90	6.1	1.83	5
90.19511	11/28/90	61	18.3	5
91.01152	02/08/91			5
91.01889	03/13/91	96.8	29.1	5
91.03432	04/25/91			5
91.05134	06/18/91	6800	2040	5
91.06507	07/16/91	59	17.7	5
91.10620	09/26/91	72	21.6	5
92.01353	02/03/92	14	4.2	5
92.02346	03/02/92	9.4	2.82	5
92.06097	05/01/92	53	15.9	5
92.06199	05/05/92			5
92.06446	05/06/92	14	4.2	5
92.06445	05/06/92	230	69	5
92.06447	05/06/92	260	78	5

Number of sampling events	33
Number of detected values	21
Mean of detected values	1037.2
Standard deviation	1953.0
Minimum value detected	6.1
Maximum value detected	6800.0
3x standard deviation	5859.0
Maximum value detected + 3x STD	12659.0
Regulatory Limit	25000

REFERENCES

1. George E.P. Box, William G. Hunter, J. Stuart Hunter, 1978, Statistics for Experimenters, Wiley and Sons, New York.

2. Paul Brown, SAIC, July 1993, Considerations for Management of Sludge Generated at the Los Alamos National Laboratory Wastewater Treatment Plant (TA-50-1), Predecisional Draft.

3. Chichan Chen, U.S. EPA, Waste Identification Branch, Delisting Section, October 1993, *personal communication.*

4. Juan Corpion, LANL EM-8, May 1993, *personal communication.*

5. Environment, Safety, and Health Manual, LANL, 1991, Administrative Requirement 10-1, Radioactive Liquid Waste.

6. Steve Hanson, LANL EM-7, December 1992, *personal communication.*

7. International Technologies Corp., 1992, Los Alamos National Laboratory Waste Stream Characterization System.

8. John Kelly, LANL EM-7, September 1993, Handling and Storage Costs for Mixed Waste Generated by the ER Program.

9. Ralph Koenig, LANL HSE-7, 1988, Storage of Mixed Wastes and Suspected Mixed Wastes, memorandum (27 May).

10. Diane Lindsay, LANL EM-7, 1991, Standard Operating Procedures Summaries.

11. Los Alamos National Laboratory, 1991, Relabeling Sludge From the RLWTP.

12. Guy Lussiez, June 1992, Schedule for Treating LANL Mixed Wastes Before and After Startup of the Hazardous Waste Treatment Facility.

13. Tim Martinez, LANL ADP, May 1993, *personal communication.*

14. William Midkiff, LANL EM-7, May 1993, *personal communication.*

15. William Midkiff, LANL EM-7, 1991, Summary of "Mixed Waste" Meeting, February 26, 1991, memorandum (19 March).

16. Kent Parker, Envirocare of Utah, Inc., September 1993, *personal communication.*

17. Steve Rae, LANL EM-8, May 1993, *personal communication.*

18. Mike Saladen, LANL EM-8, May 1993, *personal communication.*

19. Mort Sanders, LANL EM-7, May 1993, *personal communication.*

20. Santa Fe Engineering, Ltd., March 1993, Report on the Feasibility of DSSI Treatment and Disposal of Los Alamos National Laboratory Waste.

21. Tim Sloan, LANL EM-7, September 1993, *personal communication.*

22. United States Environmental Protection Agency (U.S. EPA), 1993, Petitions to Delist Hazardous Wastes, A Guidance Manual, Second Edition, EPA/530-R-93-007.

23. U.S. EPA, 1992, Code of Federal Regulations, Title 40, Parts 261-268, and Title 49, Parts 171-179.

REFERENCES (continued)

24. U.S. EPA, 1986, Test Methods for Evaluation Solid Waste, SW-846.

Evaluation of Historical (May 1988 – December 1992) RLWTF Influent VOC/SVOC Sampling Results to Characterize Influent as "Solid" or "Hazardous" Waste, per EPA SW–846.

1. The mean, standard deviation, variance, and standard error of the mean must be determined for each chemical contaminant.

2. The mean is compared to the standard deviation. If the mean is greater than the standard deviation, the data are assumed to be normally distributed. If the mean is less than the standard deviation, the data must be transformed prior to statistical analysis.

3. Analyze 1,1,1–trichloroethane RLWTF influent sampling results.
   33 sampling events, 15 detections of 1,1,1–trichloroethane, 18 nondetections.

DETECTED CONC (mg/L)
0.0255
0.2743
0.0538
4.223
2.8875
2.8859
0.13
0.45
0.041
0.0402
0.0124
0.09
0.1101
0.0091
0.068
0
0
0
0
0
0
0
0
0
0
0
0
0
0
0
0
0

Mean =	0.342 mg/L
Std Dev =	0.9685
Variance =	0.9381
Std Err of Mean =	0.1686

The mean is less than the standard deviation. Therefore, the data is characterized by a negative binomial distribution, and must be normalized through use of the arcsin transformation (EPA SW–846, pg. NINE–10).

4. Use the arcsin transformation, as described in Statistics For Experimenters, (Box, Hunter, and Hunter. Wiley and Sons Publishers, 1978).
Convert detected concentrations to percentages of the regulatory threshold (RT), (for 1,1,1–trichloroethane RT = 25 mg/L, per 40 CFR 261.3)
then calculate transformed values (x) from the equation:

sin x = sqrt (p) ; where p = det.conc/RT, and x is measured in grads.

DETECTED CONC (mg/L)	DET CONC PERCENT OF RT	x arcsin [sqrt (p)]
0.0255	0.102	2.0335
0.2743	1.0972	6.6807
0.0538	0.2152	2.9543
4.223	16.892	26.964
2.8875	11.55	22.0755
2.8859	11.5436	22.0691
0.13	0.52	4.5947
0.45	1.8	8.567
0.041	0.164	2.5788
0.0402	0.1608	2.5535
0.0124	0.0496	1.4179
0.09	0.36	3.822
0.1101	0.4404	4.2279
0.0091	0.0364	1.2147
0.068	0.272	3.3217
0	0	0
0	0	0
0	0	0
0	0	0
0	0	0
0	0	0
0	0	0
0	0	0
0	0	0
0	0	0
0	0	0
0	0	0
0	0	0
0	0	0
0	0	0
0	0	0
0	0	0
0	0	0
0	0	0
RT = 25 mg/L	100	100

Perform all subsequent calculations on transformed data (x values, from table, above).

Mean =	3.487
Std Dev =	6.770
Std Err of Mean =	1.178

5. Calculate the upper limit of the 80% confidence interval (CI), in accordance with SW-846 guidance [pg NINE-6, and equation (6) in Table 9-1].

Upper limit of 80% CI =	5.031
1,1,1-trichloroethane RT, transformed =	100

Upper limit of 80% confidence interval is less than the RT for 1,1,1-trichloroethane. Therefore, 1,1,1,-trichloroethane is "not considered to be present in the waste at a hazardous level".

1,1,2–trichloroethane

Analyze 1,1,2–trichloroethane RLWTF influent sampling results.

33 sampling events, 2 detections of 1,1,2–trichloroethane, 31 nondetections.

DETECTED CONC (mg/L)
0.0712
0.0711
0
0
0
0
0
0
0
0
0
0
0
0
0
0
0
0
0
0
0
0
0
0
0
0
0
0
0
0
0
0
0

Mean =	0.004 mg/L.
Std Dev =	0.0170
Variance =	0.0003
Std Err of Mean =	0.0030

The mean is less than the standard deviation. Therefore, the data is characterized by a negative binomial distribution, and must be normalized through use of the arcsin transformation (EPA SW–846, pg. NINE–10).

Use the arcsin transformation, as described in Statistics For Experimenters, (Box, Hunter, and Hunter. Wiley and Sons Publishers, 1978).

Convert detected concentrations to percentages of the regulatory threshold (RT), (for 1,1,2–trichloroethane RT = 1 mg/L, per 40 CFR 261.3) then calculate transformed values (x) from the equation:

sin x = sqrt (p) ; where p = det.conc/RT, and x is measured in grads.

DETECTED CONC (mg/L)	DET CONC PERCENT OF RT	x arcsin [sqrt (p)]
0.0712	7.12	17.1955
0.0711	7.11	17.1831
0	0	0
0	0	0
0	0	0
0	0	0
0	0	0
0	0	0
0	0	0
0	0	0
0	0	0
0	0	0
0	0	0
0	0	0
0	0	0
0	0	0
0	0	0
0	0	0
0	0	0
0	0	0
0	0	0
0	0	0
0	0	0
0	0	0
0	0	0
0	0	0
0	0	0
0	0	0
0	0	0
0	0	0
0	0	0
0	0	0
0	0	0
0	0	0
0	0	0
RT = 1 mg/L	100	100

Perform all subsequent calculations on transformed data (x values, from table, above).

Mean =	1.042
Std Dev =	4.101
Std Err of Mean =	0.714

Calculate the upper limit of the 80% confidence interval (CI), in accordance with SW-846 guidance [pg NINE-6, and equation (6) in Table 9-1].

Upper limit of 80% CI =	1.977
1,1,1-trichloroethane RT, transformed =	100

Upper limit of 80% confidence interval is less than the RT for 1,1,2-trichloroethane. Therefore, 1,1,2,-trichloroethane is "not considered to be present in the waste at a hazardous level".

2-butanone

Evaluate 2-butanone RLWTF influent sampling results.

33 sampling events, 9 detections of 2-butanone, 24 nondetections.

DETECTED CONC (mg/L)
0.0208
0.0006
0.1548
0.1167
0.1361
0.149
0.065
0.37
0.18
0
0
0
0
0
0
0
0
0
0
0
0
0
0
0
0
0
0
0
0
0
0

Mean =	0.036 mg/L.
Std Dev =	0.0796
Variance =	0.0063
Std Err of Mean =	0.0138

The mean is less than the standard deviation. Therefore, the data is characterized by a negative binomial distribution, and must be normalized through use of the arcsin transformation (EPA SW-846, pg. NINE-10).

Use the arcsin transformation, as described in Statistics For Experimenters, (Box, Hunter, and Hunter. Wiley and Sons Publishers, 1978).

Convert detected concentrations to percentages of the regulatory threshold (RT), (for 2-butanone RT = 25 mg/L, per 40 CFR 261.3)

then calculate transformed values (x) from the equation:

sin x = sqrt (p) ; where p = det.conc/RT, and x is measured in grads.

DETECTED CONC (mg/L)	DET CONC PERCENT OF RT	x arcsin [sqrt (p)]
0.0208	0.0832	1.8365
0.0006	0.0024	0.3119
0.1548	0.6192	5.0147
0.1167	0.4668	4.353
0.1361	0.5444	4.7015
0.149	0.596	4.9197
0.065	0.26	3.2475
0.37	1.48	7.764
0.18	0.72	5.4084
0	0	0
0	0	0
0	0	0
0	0	0
0	0	0
0	0	0
0	0	0
0	0	0
0	0	0
0	0	0
0	0	0
0	0	0
0	0	0
0	0	0
0	0	0
0	0	0
0	0	0
0	0	0
0	0	0
0	0	0
0	0	0
0	0	0
0	0	0
0	0	0
0	0	0
RT = 25 mg/L	100	100

Perform all subsequent calculations on transformed data (x values, from table, above).

Mean = 1.138
Std Dev = 2.141
Std Err of Mean = 0.373

Calculate the upper limit of the 80% confidence interval (CI), in accordance with SW-846 guidance [pg NINE-6, and equation (6) in Table 9-1].

Upper limit of 80% CI = 1.626
2-butanone RT, transformed = 100

Upper limit of 80% confidence interval is less than the RT for 2-butanone. Therefore, 2-butanone is "not considered to be present in the waste at a hazardous level".

benzene

Evaluate benzene RLWTF influent sampling results.

33 sampling events, 5 detections of benzene, 28 nondetections.

DETECTED CONC (mg/L)
0.0066
0.0031
0.0091
0.0065
0.0063
0
0
0
0
0
0
0
0
0
0
0
0
0
0
0
0
0
0
0
0
0
0
0
0
0
0
0
0

Mean =	0.001 mg/L
Std Dev =	0.0023
Variance =	0.0000
Std Err of Mean =	0.0004

The mean is less than the standard deviation. Therefore, the data is characterized by a negative binomial distribution, and must be normalized through use of the arcsin transformation (EPA SW−846, pg. NINE−10).

4. Use the arcsin transformation, as described in Statistics For Experimenters, (Box, Hunter, and Hunter. Wiley and Sons Publishers, 1978).

   Convert detected concentrations to percentages of the regulatory threshold (RT), (for benzene RT = 1 mg/L, per 40 CFR 261.3)

   then calculate transformed values (x) from the equation:

   sin x = sqrt (p) ; where p = det.conc/RT, and x is measured in grads.

DETECTED CONC (mg/L)	DET CONC PERCENT OF RT	x arcsin [sqrt (p)]
0.0066	0.66	5.1776
0.0031	0.31	3.5464
0.0091	0.91	6.0822
0.0065	0.65	5.1382
0.0063	0.63	5.0583
0	0	0
0	0	0
0	0	0
0	0	0
0	0	0
0	0	0
0	0	0
0	0	0
0	0	0
0	0	0
0	0	0
0	0	0
0	0	0
0	0	0
0	0	0
0	0	0
0	0	0
0	0	0
0	0	0
0	0	0
0	0	0
0	0	0
0	0	0
0	0	0
0	0	0
0	0	0
0	0	0
0	0	0
0	0	0
RT = 1 mg/L	100	100

Perform all subsequent calculations on transformed data (x values, from table, above).

Mean = 0.758
Std Dev = 1.821
Std Err of Mean = 0.317

Calculate the upper limit of the 80% confidence interval (CI), in accordance with SW-846 guidance [pg NINE-6, and equation (6) in Table 9-1].

Upper limit of 80% CI = 1.173
benzene RT, transformed = 100

Upper limit of 80% confidence interval is less than the RT for benzene. Therefore, benzene is "not considered to be present in the waste at a hazardous level".

chlorobenzene

Evaluate chlorobenzene RLWTF influent sampling results.

33 sampling events, 4 detections of chlorobenzene, 29 nondetections.

DETECTED CONC (mg/L)
0.0031
0.0026
0.0012
0.001
0
0
0
0
0
0
0
0
0
0
0
0
0
0
0
0
0
0
0
0
0
0
0
0
0
0
0
0
0
0
0

Mean = 0.00024 mg/L
Std Dev = 0.00072
Variance = 0.00000
Std Err of Mean = 0.00012

The mean is less than the standard deviation. Therefore, the data is characterized by a negative binomial distribution, and must be normalized through use of the arcsin transformation (EPA SW-846, pg. NINE-10).

Use the arcsin transformation, as described in Statistics For Experimenters, (Box, Hunter, and Hunter. Wiley and Sons Publishers, 1978).

Convert detected concentrations to percentages of the regulatory threshold (RT), (for chlorobenzene RT = 25 mg/L, per 40 CFR 261.3)

then calculate transformed values (x) from the equation:

sin x = sqrt (p) ; where p = det.conc/RT, and x is measured in grads.

DETECTED CONC (mg/L)	DET CONC PERCENT OF RT	x arcsin [sqrt (p)]
0.0031	0.0124	0.7089
0.0026	0.0104	0.6492
0.0012	0.0048	0.4411
0.001	0.004	0.4026
0	0	0
0	0	0
0	0	0
0	0	0
0	0	0
0	0	0
0	0	0
0	0	0
0	0	0
0	0	0
0	0	0
0	0	0
0	0	0
0	0	0
0	0	0
0	0	0
0	0	0
0	0	0
0	0	0
0	0	0
0	0	0
0	0	0
0	0	0
0	0	0
0	0	0
0	0	0
0	0	0
0	0	0
0	0	0
0	0	0
RT = 25 mg/L	100	100

Perform all subsequent calculations on transformed data (x values, from table, above).

Mean = 0.067
Std Dev = 0.185
Std Err of Mean = 0.032

Calculate the upper limit of the 80% confidence interval (CI), in accordance with SW-846 guidance [pg NINE-6, and equation (6) in Table 9-1].

Upper limit of 80% CI = 0.109
chlorobenzene RT, transformed = 100

Upper limit of 80% confidence interval is less than the RT for chlorobenzene. Therefore, chlorobenzene is "not considered to be present in the waste at a hazardous level".

carbon disulfide

Evaluate carbon disulfide RLWTF influent sampling results.

33 sampling events, 9 detections of carbon disulfide, 24 nondetections.

DETECTED CONC (mg/L)
1.2583
4.2872
3.3453
7.3746
5.9829
6.2935
0.011
0.16
0.0116
0
0
0
0
0
0
0
0
0
0
0
0
0
0
0
0
0
0
0
0
0
0
0
0
0

Mean =	0.870 mg/L
Std Dev =	2.0298
Variance =	4.1201
Std Err of Mean =	0.3533

The mean is less than the standard deviation. Therefore, the data is characterized by a negative binomial distribution, and must be normalized through use of the arcsin transformation (EPA SW-846, pg. NINE-10).

Use the arcsin transformation, as described in Statistics For Experimenters, (Box, Hunter, and Hunter. Wiley and Sons Publishers, 1978).

Convert detected concentrations to percentages of the regulatory threshold (RT), (for carbon disulfide RT = 25 mg/L, per 40 CFR 261.3)

then calculate transformed values (x) from the equation:

sin x = sqrt (p) ; where p = det.conc/RT, and x is measured in grads.

DETECTED CONC (mg/L)	DET CONC PERCENT OF RT	x arcsin [sqrt (p)]
1.2583	5.0332	14.405
4.2872	17.1488	27.182
3.3453	13.3812	23.841
7.3746	29.4984	36.552
5.9829	23.9316	32.542
6.2935	25.174	33.461
0.011	0.044	1.336
0.16	0.64	5.098
0.0116	0.0464	1.371
0	0	0
0	0	0
0	0	0
0	0	0
0	0	0
0	0	0
0	0	0
0	0	0
0	0	0
0	0	0
0	0	0
0	0	0
0	0	0
0	0	0
0	0	0
0	0	0
0	0	0
0	0	0
0	0	0
0	0	0
0	0	0
0	0	0
0	0	0
0	0	0
RT = 25 mg/L	100	100

Perform all subsequent calculations on transformed data (x values, from table, above).

Mean = 5.327
Std Dev = 11.177
Std Err of Mean = 1.946

Calculate the upper limit of the 80% confidence interval (CI), in accordance with SW–846 guidance [pg NINE–6, and equation (6) in Table 9–1].

Upper limit of 80% CI = 7.876
carbon disulfide RT, transformed = 100

Upper limit of 80% confidence interval is less than the RT for carbon disulfide. Therefore, carbon disulfide is "not considered to be present in the waste at a hazardous level".

carbon tetrachloride

Evaluate carbon tetrachloride RLWTF influent sampling results.

33 sampling events, 5 detections of carbon tetrachloride, 28 nondetections.

DETECTED CONC (mg/L)
0.0009
0.0037
0.0015
0.0007
0.0165
0
0
0
0
0
0
0
0
0
0
0
0
0
0
0
0
0
0
0
0
0
0
0
0
0
0
0
0
0

Mean =	0.001 mg/L
Std Dev =	0.00288
Variance =	0.00001
Std Err of Mean =	0.00050

The mean is less than the standard deviation.
Therefore, the data is characterized by a negative
binomial distribution, and must be normalized
through use of the arcsin transformation
(EPA SW-846, pg. NINE-10).

Use the arcsin transformation, as described in Statistics For Experimenters, (Box, Hunter, and Hunter. Wiley and Sons Publishers, 1978).

Convert detected concentrations to percentages of the regulatory threshold (RT), (for carbon tetrachloride RT = 1 mg/L, per 40 CFR 261.3)

then calculate transformed values (x) from the equation:

sin x = sqrt (p) ; where p = det.conc/RT, and x is measured in grads.

DETECTED CONC (mg/L)	DET CONC PERCENT OF RT	x arcsin [sqrt (p)]
0.0009	0.09	1.9101
0.0037	0.37	3.8748
0.0015	0.15	2.4662
0.0007	0.07	1.6845
0.0165	1.65	8.2002
0	0	0
0	0	0
0	0	0
0	0	0
0	0	0
0	0	0
0	0	0
0	0	0
0	0	0
0	0	0
0	0	0
0	0	0
0	0	0
0	0	0
0	0	0
0	0	0
0	0	0
0	0	0
0	0	0
0	0	0
0	0	0
0	0	0
0	0	0
0	0	0
0	0	0
0	0	0
0	0	0
0	0	0
0	0	0
RT = 1 mg/L	100	100

Perform all subsequent calculations on transformed data (x values, from table, above).

Mean =	0.550
Std Dev =	1.604
Std Err of Mean =	0.279

Calculate the upper limit of the 80% confidence interval (CI), in accordance with SW-846 guidance [pg NINE-6, and equation (6) in Table 9-1].

Upper limit of 80% CI =	0.915
carbon tetrachloride RT, transformed =	100

Upper limit of 80% confidence interval is less than the RT for carbon tetrachloride. Therefore, carbon tetrachloride is "not considered to be present in the waste at a hazardous level".

trichloroethene

Evaluate trichloroethene RLWTF influent sampling results.

33 sampling events, 5 detections of trichloroethene, 28 nondetections.

DETECTED CONC (mg/L)
0.0051
0.0004
0.052
0.0368
0.0392
0
0
0
0
0
0
0
0
0
0
0
0
0
0
0
0
0
0
0
0
0
0
0
0
0
0
0
0

Mean = 0.00405 mg/L
Std Dev = 0.01241
Variance = 0.00015
Std Err of Mean = 0.00216

The mean is less than the standard deviation. Therefore, the data is characterized by a negative binomial distribution, and must be normalized through use of the arcsin transformation (EPA SW-846, pg. NINE-10).

Use the arcsin transformation, as described in Statistics For Experimenters, (Box, Hunter, and Hunter. Wiley and Sons Publishers, 1978).

Convert detected concentrations to percentages of the regulatory threshold (RT), (for trichloroethene RT = 1 mg/L, per 40 CFR 261.3)

then calculate transformed values (x) from the equation:

sin x = sqrt (p) ; where p = det.conc/RT, and x is measured in grads.

DETECTED CONC (mg/L)	DET CONC PERCENT OF RT	x arcsin [sqrt (p)]
0.0051	0.51	4.5502
0.0004	0.04	1.2733
0.052	5.2	14.646
0.0368	3.68	12.2887
0.0392	3.92	12.6883
0	0	0
0	0	0
0	0	0
0	0	0
0	0	0
0	0	0
0	0	0
0	0	0
0	0	0
0	0	0
0	0	0
0	0	0
0	0	0
0	0	0
0	0	0
0	0	0
0	0	0
0	0	0
0	0	0
0	0	0
0	0	0
0	0	0
0	0	0
0	0	0
0	0	0
0	0	0
0	0	0
0	0	0
0	0	0
RT = 1 mg/L	100	100

Perform all subsequent calculations on transformed data (x values, from table, above).

Mean = 1.377
Std Dev = 3.839
Std Err of Mean = 0.668

Calculate the upper limit of the 80% confidence interval (CI), in accordance with SW-846 guidance [pg NINE-6, and equation (6) in Table 9-1].

Upper limit of 80% CI = 2.253
trichloroethene RT, transformed = 100

Upper limit of 80% confidence interval is less than the RT for trichloroethene. Therefore, trichloroethene is "not considered to be present in the waste at a hazardous level".

methylene chloride

Evaluate methylene chloride RLWTF influent sampling results.

33 sampling events, 21 detections of methylene chloride, 12 nondetections.

DETECTED CONC (mg/L)
0.5564
1.7276
1.4143
1.4114
1.2156
1.2287
0.0255
0.0263
6.5
0.0061
0.061
0.0968
6.8
0.059
0.072
0.014
0.0094
0.053
0.014
0.23
0.26
0
0
0
0
0
0
0
0
0
0
0

Mean =	0.660 mg/L
Std Dev =	1.600
Variance =	2.561
Std Err of Mean =	0.278

The mean is less than the standard deviation. Therefore, the data is characterized by a negative binomial distribution, and must be normalized through use of the arcsin transformation (EPA SW-846, pg. NINE-10).

Use the arcsin transformation, as described in Statistics For Experimenters, (Box, Hunter, and Hunter. Wiley and Sons Publishers, 1978).

Convert detected concentrations to percentages of the regulatory threshold (RT), (for methylene chloride RT = 25 mg/L, per 40 CFR 261.3)

then calculate transformed values (x) from the equation:

sin x = sqrt (p) ; where p = det.conc/RT, and x is measured in grads.

DETECTED CONC (mg/L)	DET CONC PERCENT OF RT	x arcsin [sqrt (p)]
0.5564	2.2256	9.533
1.7276	6.9104	16.9342
1.4143	5.6572	15.2884
1.4114	5.6456	15.2725
1.2156	4.8624	14.1543
1.2287	4.9148	14.2317
0.0255	0.102	2.0335
0.0263	0.1052	2.0652
6.5	26	34.0637
0.0061	0.0244	0.9945
0.061	0.244	3.1459
0.0968	0.3872	3.964
6.8	27.2	34.9282
0.059	0.236	3.0939
0.072	0.288	3.4181
0.014	0.056	1.5067
0.0094	0.0376	1.2345
0.053	0.212	2.9323
0.014	0.056	1.5067
0.23	0.92	6.1156
0.26	1.04	6.5036
0	0	0
0	0	0
0	0	0
0	0	0
0	0	0
0	0	0
0	0	0
0	0	0
0	0	0
0	0	0
0	0	0
0	0	0
RT = 25 mg/L	100	100

Perform all subsequent calculations on transformed data (x values, from table, above).

Mean = 5.846
Std Dev = 8.962
Std Err of Mean = 1.560

Calculate the upper limit of the 80% confidence interval (CI), in accordance with SW-846 guidance [pg NINE-6, and equation (6) in Table 9-1].

Upper limit of 80% CI = 7.890
methylene chloride RT, tranformed = 100

Upper limit of 80% confidence interval is less than the RT for methylene chloride. Therefore, methylene chloride is "not considered to be present in the waste at a hazardous level".

o–dichlorobenzene

Evaluate o–dichlorobenzene RLWTF influent sampling results.

33 sampling events, 1 detection of o–dichlorobenzene, 32 nondetections.

DETECTED CONC (mg/L)
0.0005
0
0
0
0
0
0
0
0
0
0
0
0
0
0
0
0
0
0
0
0
0
0
0
0
0
0
0
0
0
0
0
0
0
0
0

Mean = 0.00002 mg/L.
Std Dev = 0.00009
Variance = 0.00000
Std Err of Mean = 0.00001

The mean is less than the standard deviation. Therefore, the data is characterized by a negative binomial distribution, and must be normalized through use of the arcsin transformation (EPA SW–846, pg. NINE–10).

Use the arcsin transformation, as described in Statistics For Experimenters, (Box, Hunter, and Hunter. Wiley and Sons Publishers, 1978).

Convert detected concentrations to percentages of the regulatory threshold (RT), (for o–dichlorobenzene RT = 25 mg/L, per 40 CFR 261.3)

then calculate transformed values (x) from the equation:

sin x = sqrt (p) ; where p = det.conc/RT, and x is measured in grads.

DETECTED CONC (mg/L)	DET CONC PERCENT OF RT	x arcsin [sqrt (p)]
0.0005	0.002	0.2847
0	0	0
0	0	0
0	0	0
0	0	0
0	0	0
0	0	0
0	0	0
0	0	0
0	0	0
0	0	0
0	0	0
0	0	0
0	0	0
0	0	0
0	0	0
0	0	0
0	0	0
0	0	0
0	0	0
0	0	0
0	0	0
0	0	0
0	0	0
0	0	0
0	0	0
0	0	0
0	0	0
0	0	0
0	0	0
0	0	0
0	0	0
0	0	0
0	0	0
0	0	0
0	0	0
RT = 25 mg/L	100	100

Perform all subsequent calculations on transformed data (x values, from table, above).

Mean = 0.009
Std Dev = 0.049
Std Err of Mean = 0.008

Calculate the upper limit of the 80% confidence interval (CI), in accordance with SW-846 guidance [pg NINE-6, and equation (6) in Table 9-1].

Upper limit of 80% CI = 0.020
o-dichlorobenzene RT, transformed = 100

Upper limit of 80% confidence interval is less than the RT for o-dichlorobenzene. Therefore, o-dichlorobenzene is "not considered to be present in the waste at a hazardous level".

tetrachloroethene

Evaluate tetrachloroethene RLWTF influent sampling results.

33 sampling events, 6 detections of tetrachloroethene, 27 nondetections.

DETECTED CONC (mg/L)
0.0255
0.1379
0.0938
0.072
0.07
0.0674
0
0
0
0
0
0
0
0
0
0
0
0
0
0
0
0
0
0
0
0
0
0
0
0
0
0
0
0
0

Mean = 0.01414 mg/L.
Std Dev = 0.03325
Variance = 0.00111
Std Err of Mean = 0.00579

The mean is less than the standard deviation. Therefore, the data is characterized by a negative binomial distribution, and must be normalized through use of the arcsin transformation (EPA SW-846, pg. NINE-10).

Use the arcsin transformation, as described in Statistics For Experimenters, (Box, Hunter, and Hunter. Wiley and Sons Publishers, 1978).

Convert detected concentrations to percentages of the regulatory threshold (RT), (for tetrachloroethene RT = 1 mg/L, per 40 CFR 261.3)

then calculate transformed values (x) from the equation:

sin x = sqrt (p) ; where p = det.conc/RT, and x is measured in grads.

DETECTED CONC (mg/L)	DET CONC PERCENT OF RT	x arcsin [sqrt (p)]
0.0255	2.55	10.2097
0.1379	13.79	24.2209
0.0938	9.38	19.8161
0.072	7.2	17.2942
0.07	7	17.0463
0.0674	6.74	16.7191
0	0	0
0	0	0
0	0	0
0	0	0
0	0	0
0	0	0
0	0	0
0	0	0
0	0	0
0	0	0
0	0	0
0	0	0
0	0	0
0	0	0
0	0	0
0	0	0
0	0	0
0	0	0
0	0	0
0	0	0
0	0	0
0	0	0
0	0	0
0	0	0
0	0	0
0	0	0
0	0	0
0	0	0
RT = 1 mg/L	100	100

Perform all subsequent calculations on transformed data (x values, from table, above).

Mean = 3.191
Std Dev = 6.999
Std Err of Mean = 1.218

Calculate the upper limit of the 80% confidence interval (CI), in accordance with SW-846 guidance [pg NINE-6, and equation (6) in Table 9-1].

Upper limit of 80% CI = 4.787
tetrachlorethene RT, transformed = 100

Upper limit of 80% confidence interval is less than the RT for tetrachlororoethene. Therefore, tetrachloroethene is "not considered to be present in the waste at a hazardous level".

trichlorofluoromethane

Evaluate trichlorofluoromethane RLWTF influent sampling results.

33 sampling events, 5 detections of trichlorofluoromethane, 28 nondetections.

DETECTED CONC (mg/L)
0.0558
0.3813
0.0629
0.0594
0.0442
0.043
0
0
0
0
0
0
0
0
0
0
0
0
0
0
0
0
0
0
0
0
0
0
0
0
0
0

Mean = 0.01959 mg/L
Std Dev = 0.06677
Variance = 0.00446
Std Err of Mean = 0.01162

The mean is less than the standard deviation. Therefore, the data is characterized by a negative binomial distribution, and must be normalized through use of the arcsin transformation (EPA SW-846, pg. NINE-10).

Use the arcsin transformation, as described in Statistics For Experimenters, (Box, Hunter, and Hunter. Wiley and Sons Publishers, 1978).

Convert detected concentrations to percentages of the regulatory threshold (RT), (for trichlorfluoromethane RT = 25 mg/L, per 40 CFR 261.3)

then calculate transformed values (x) from the equation:

sin x = sqrt (p) ; where p = det.conc/RT, and x is measured in grads.

DETECTED CONC (mg/L)	DET CONC PERCENT OF RT	x arcsin [sqrt (p)]
0.0558	0.2232	3.0088
0.3813	1.5252	7.8823
0.0629	0.2516	3.1946
0.0594	0.2376	3.1044
0.0442	0.1768	2.6776
0.043	0.172	2.641
0	0	0
0	0	0
0	0	0
0	0	0
0	0	0
0	0	0
0	0	0
0	0	0
0	0	0
0	0	0
0	0	0
0	0	0
0	0	0
0	0	0
0	0	0
0	0	0
0	0	0
0	0	0
0	0	0
0	0	0
0	0	0
0	0	0
0	0	0
0	0	0
0	0	0
0	0	0
0	0	0
RT = 25 mg/L	100	100

Perform all subsequent calculations on transformed data (x values, from table, above).

Mean = 0.682
Std Dev = 1.650
Std Err of Mean = 0.287

Calculate the upper limit of the 80% confidence interval (CI), in accordance with SW-846 guidance [pg NINE-6, and equation (6) in Table 9-1].

Upper limit of 80% CI = 1.058
trichlorofluoromethane RT, transformed = 100

Upper limit of 80% confidence interval is less than the RT for trichlorfluoromethane. Therefore, trichlorofluoromethane is "not considered to be present in the waste at a hazardous level".

"Radioactive Liquid Waste Treatment and Disposal," Technical Bulletin 1002, in *Environment, Safety, and Health Manual*, Los Alamos National Laboratory Manual, Chapter 1 (most recent edition).

"Resource Conservation and Recovery Act of 1976," 90 U.S. Statutes at Large (1976 and amendments).

"Shipment of Radioactive Materials," Administrative Requirement 3-5, in *Environment, Safety, and Health Manual*, Los Alamos National Laboratory Manual, Chapter 1 (most recent edition).

"Standard Operating Procedures and Special Work Permits," Administrative Requirement 1-3, in *Environment, Safety, and Health Manual*, Los Alamos National Laboratory Manual, Chapter 1 (most recent edition).

"Toxic Substances Control Act," Public Law 94-469, October 11, 1976, 90 Stat. 2003; codified at 15 USC 2601 et seq., as amended.

Referrals

Accelerator Health Protection Group (HSE-11), 7-5890

Chemistry Health Protection Group (HSE-10), 7-7171

Environmental Protection Group (HSE-8), 7-5021

Hazardous Materials Packaging (HAZPACT) Section of the Safety and Risk Assessment Group (HSE-3), 7-4127

Liquid Waste Section of the Waste Management Group (HSE-7), 7-5834 or 7-6904

Radiation Protection Group (HSE-1), 7-5296

Waste Management Group (HSE-7), 7-4301

Appendix

Appendix. Radioactive Liquid Waste Pipelines

Form

ES&H Form 10-1A, Disposal of Batch Liquid Waste

Appendix. Radioactive Liquid Waste Pipelines

Introduction

Radioactive liquid waste pipelines carry radioactive liquid waste from various Laboratory sites to liquid waste storage and treatment facilities. The system of pipelines includes a line that transfers untreated waste from storage tanks at TA-2 and treated waste from a branch treatment plant at TA-21 to the main treatment plant at TA-50.

Buildings Connected to the Radioactive Liquid Waste Pipeline

Laboratory-Wide. The following buildings are connected to a radioactive liquid waste pipeline that carries waste to the main treatment plant at TA-50:

- at TA-2, building Omega-1, -44, and -57;
- at TA-3, buildings SM-16, -29, -34, -35, -39, -65, -66, -102, -141, -154, -216, and -1264;
- at TA-21, building 257;
- at TA-35, building TSL-213;
- at TA-48, buildings RC-1 and RC-45;
- at TA-50, buildings WM-1, -37, and -69
- at TA-55, buildings PF-4 and PF-41; and
- at TA-59, building OH-1.

TA-53. The following buildings at TA-53 are connected to radioactive liquid waste pipelines that transport waste to storage tanks: buildings MPF-1 (laboratories), the beam channel, MPF-3S, -3M, -3N, -7, -28, -30, and -622. From the storage tanks, the waste is pumped either directly into the lined lagoon at the east end of TA-53 or else into tank trucks, which then transfer the waste to the lagoon or to TA-50.

TA-21. The following buildings at TA-21 are connected to the radioactive liquid waste pipeline that transports waste to the branch treatment plant at TA-21-257: buildings DP-3, -4, -5, -150, -152, -155, and -209.

Monitoring Flow

Radioactive liquid waste pipelines at each generator site are equipped with metering devices that transmit flow data via intelligent remote multiplexers to a computer at TA-50-1. A graphical plot of these data informs waste management personnel of normal flow volumes and any unusual conditions.

Monitoring Leaks

The main radioactive liquid waste pipeline is double-contained; that is, radioactive liquid waste flows through an inner pipe that is surrounded by an outer pipe. If the inner pipe leaks, the liquid drains into the outer pipe and flows downstream to the nearest manhole, where a detector transmits an alarm to the computer at TA-50-1.

If both lines rupture accidentally, HSE-7 must be informed as soon as possible to take corrective actions and to alert emergency personnel. Upon notification by HSE-7, personnel from HSE-1/-10/-11 and HSE-8 immediately begin sampling and monitoring the leak.

Los Alamos

Los Alamos National Laboratory
Los Alamos, New Mexico 87545

memorandum

TO: Distribution

DATE: May 27, 1988

FROM: Ralph Koenig, HSE-7 Group Ldr.

MAIL STOP/TELEPHONE: E518/7-4301

SYMBOL: HSE7-88-260

SUBJECT: STORAGE OF MIXED WASTES AND SUSPECTED MIXED WASTES

Effective immediately, all known or suspected mixed waste forms will be stored in a readily retrievable manner. Karen Balo is to determine a site for installation of a new storage facility, and work with John Warren to purchase/install a tension-support structure on an asphalt pad at the chosen site. Until the new structure is completed, the TRU Waste Preparation Facility will be used to house dewatered precipitation sludge and other known/suspected waste forms that may be appropriate for storage there.

RAK/jw

Distribution:

Tom Gunderson, HSE-DO, K491
Doris Garvey, HSE-DO, K491
Marji Martz-Emerson, HSE-8, K490
Karen Balo, HSE-7, J592
Jerry Buchholz, HSE-7, E518
Lee Borduin, HSE-7, E517
John Warren, HSE-7, E516
Ray Garde, HSE-7, E518

Los Alamos
Los Alamos National Laboratory
Los Alamos, New Mexico 87545

memorandum

TO: Distribution

THRU: Tony Drypolcher

DATE: March 19, 1991

MAIL STOP/TELEPHONE: E517/7-7391

FROM: William S. Midkiff

SYMBOL: HSE-7A-91-082

SUBJECT: **Summary of "Mixed Waste" Meeting, February 26, 1991**

Attendees: Tony Drypolcher, Stan Zygmunt, Jerry Buchholz, Jim White, Ken Hargis, Bill Midkiff, Juan Corpion, Annemarie Gustavsson, Suzanne Moore-Mayne

Background:

In Section 1003 (a) (4) the U. S. Congress in 1976 stated one of the goals of RCRA as: assuring that hazardous waste management practices are conducted in a manner which protects human health and the environment. The target users are process industries where the waste stream is relatively uniform and definable. To prevent industries from using dilution as a treatment process, no concentration of a certain hazardous waste is low enough for unregulated discharge to the environment to be allowed. RCRA was not designed for complex laboratories that generate a multitude of wastes, mostly in bench-top quantities. Nonetheless, LANL must comply with the law. The difficulty arises in defining the source of our waste materials because of the thousands of entry points into our waste line. This situation makes the sludge generated from the treatment suspect recirculated hazardous waste.

In addition, Section 1004 (27) includes sludges from wastewater treatment facilities such as those generated at TA-50, but exempts the discharge effluent from the definition of a solid waste.

The intent of the law appears to have been exceeded by regulation. However, EPA's position that small businesses and R&D facilities are subject to these regulations has been successfully defended in court countless times. As far as DOE is concerned, the Congress specifically mandated the Department to comply with the Law in the Summer of 1987 during Subcommittee meetings. It was a witch-hunt in which DOE had little or no defensible posture.

Defining a Hazardous Waste / Preclusion from Introduction to Sewer

The presence of a potentially hazardous material, such as methylene chloride, that appears on one or more lists of hazardous wastes does not necessarily mean that the material is a hazardous waste. If it is a spent solvent from a degreasing vat, it is a hazardous waste. If it is residual clinging to a degreased part, it is not a hazardous waste. If it leaches from plastic pipe that conveys waste material, it is not a hazardous waste.

Even if methylene chloride or other hazardous waste constituents are found, if they are derived from a source that does not meet the listing criteria for these substances, they would not be a hazardous waste. The IT study may clarify the sources of suspect hazardous wastes.

Present laboratory policy prohibits all spent organic solvents from introduction into the liquid low-level radioactive waste sewer. All sinks draining to the sewer are identified and labelled with permissible/nonpermissible wastes.

The Environmental Protection Group HSE-8 has commissioned an extensive survey and inventory of waste streams Laboratory-wide.

1. inventorying the potentially hazardous materials that enter the sewer,

2. interviewing users at all Technical Areas to determine proper or improper handling of potentially hazardous material, and

The IT Corp. study will be completed by the end of calendar year 1991. The database tracking all the records from IT should be ready no later than late winter of 1992.

Following the completed IT study, HSE-8 will catalogue a database and attempt to develop a mass flow sheet that describes where all potentially hazardous materials go.

TA-50-1 Low-level Radioactive Waste (LLRW) Sludge

On May 27, 1988 a memo from Ralph Koenig, HSE-7 Group Leader was issued. It stated, "Effective Immediately, all known or suspected mixed waste forms will be stored in a readily retrievable manner". According to Jerry Buchholz, over 1000 55-gallon drums of treatment plant sludge is in storage at Area G and the plant continues to produce approximately 200 drums per year.

Past analysis of sludge and influent has revealed occasional concentrations of methylene chloride and acetone in the tens of parts per billion, greater than the limit of detection (single parts per billion). Even though the source of these organics has not been identified, they are suspected of being derived from F-solvents (40 CFR Part 261.31). HSE-8 advised HSE-7 a few years ago that the sludges from TA-50 were mixed wastes. However, the F003 classification was the responsibility of HSE-7. It is the generators responsibility to classify the waste. Up until recently, the Chemical Waste Section of HSE-7 was generically calling many spent solvents F003. Juan Corpion asked that Section to classify F-solvents as F001 through F005, where appropriate only!

In our meeting, there was general agreement that the sludge has been misclassified because one of the definitions of F003 is that it is ignitable which our waste is not. If the trace organics are derived from a listed process, either F001 or F002 might be an appropriate classification. F001 (degreasing solvents) describes the application of greatest use at LANL. Taking a conservative approach, we decided to relabel all LLRW sludge from F003 to F001 until we have the knowledge necessary to declare the waste non-hazardous or succeed in having the waste de-listed. Annemarie has been assigned this task. However, we reserve the right to completely remove any hazardous designation if a legally defensible explanation for the occurrence of the potentially hazardous material be developed that precludes its being defined as hazardous. The legal avenue is being pursued by Bill Midkiff.

If we find we cannot, legally exclude the TA-50-1 produced LLRW sludge from hazardous designation, we have three options: sample, evaluate the results of the IT survey, and apply for delisting or a variance.

If we decide to sample, we will interact with EPA and EID such that our sampling procedure follows an acceptable protocol for use as a delisting application. Juan Corpion agreed to locate or supply a list of companies and consultants that have been successful with similar delistings. Bill Midkiff will try to find instances where delisting has not been necessary because the source of suspect ingredients was not appropriate for justifying a hazardous materials classification.

Variance

Stan Zygmunt has supplied Juan Corpion with a list of approved variances. Juan will investigate the possibility of gaining a variance based on the greater risk of storing low-level radioactive waste than burying it.

The State of New Mexico may grant a variance on several provisions in RCRA for burying these wastes. However, the Laboratory would still be required to submit a Permit application for such activity. Given the current state of public opinion, Juan Corpion doubts whether LANL will ever see such activity come into fruition. On the other hand, if we delist the waste under RCRA, the sludges would become subject only to DOE Orders and thus such activity may become feasible. Thus, we should focus on delisting rather than permitting a mixed waste landfill.

Delisting

If we determine that wastewater entering the low-level radioactive waste sewer is or will be a hazardous waste, immediate steps shall be initiated to delist the waste or to preclude its introduction into the waste stream or to change the process to one that generates non-hazardous wastes.

1. The scrubber blowdown water from the incinerator will probably require delisting and the process should begin immediately through a joint effort of Juan Corpion and Stan Zygmunt.

2. HSE-7 has been designated by Tom Gunderson as the Group responsible for waste minimization. Jeff Weinrach is the Lab's Waste Minimization Coordinator. Jeff has asked for and is receiving assistance from HSE-8 in his solvent-substitution efforts. His activities are beginning to pay off as MEC Division is beginning to substitute 1,1,1-Trichloroethane with a non-regulated solvent.

3. HSE-8 will be responsible for interpreting the IT study to identify violations of lab-policy for disposal of hazardous wastes. They shall provide a summary of all of their findings to both the generator and HSE-7 who will work together to eliminate the violation. HSE-8 may request technical assistance from HSE-7.

WSM:bh

cc: T. Drypolcher, HSE-7, E517
S. Zygmunt, HSE-7, E517
J. Buchholz, HSE-7, E518
J. White, HSE-8, K490
K. Hargis, HSE-8, K490
W. Midkiff, HSE-7, E517
J. Corpion, HSE-8, K490
A. Gustavsson, HSE-7, J593
S. Moore-Mayne, c/o HSE-7
T. Gunderson, HSE-DO, K491
HSE-7A File

EPA EFFLUENT GUIDELINES AND STANDARDS FOR METAL FINISHING

(40 CFR 433; 48 FR 32485, July 15, 1983; Revised through July 1, 1991)

TITLE 40—PROTECTION OF ENVIRONMENT

CHAPTER 1—ENVIRONMENTAL PROTECTION AGENCY

SUBCHAPTER N—EFFLUENT GUIDELINES AND STANDARDS

PART 433—METAL FINISHING POINT SOURCE CATEGORY

Authority: Secs. 301, 304(b), (c), (e), and (g), 306(b) and (c), 307(b) and (c), 308 and 501 of the Clean Water Act (the Federal Water Pollution Control Act Amendments of 1971, as amended by the Clean Water Act of 1977) (the "Act"); 33 U.S.C. 1311, 1314(b) (c), (e), and (g), 1316(b) and (c), 1317(b) and (c), 1318 and 1361; 86 Stat. 816, Pub. L. 92-500; 91 Stat. 1567, Pub. L. 95-217.

Subpart A—Metal Finishing Subcategory

§433.10 Applicability; description of the metal finishing point source category.

(a) Except as noted in paragraphs (b) and (c), of this section, the provisions of this subpart apply to plants which perform any of the following six metal finishing operations on any basis material: Electroplating, Electroless Plating, Anodizing, Coating (chromating, phosphating, and coloring), Chemical Etching and Milling, and Printed Circuit Board Manufacture. If any of those six operations are present, then this part applies to discharges from those operations and also to discharges from any of the following 40 process operations: Cleaning, Machining, Grinding, Polishing, Tumbling, Burnishing, Impact Deformation, Pressure Deformation, Shearing, Heat Treating, Thermal Cutting, Welding, Brazing, Soldering, Flame Spraying, Sand Blasting, Other Abrasive Jet Machining, Electric Discharge Machining, Electrochemical Machining, Electron Beam Machining, Laser Beam Machining, Plasma Arc Machining, Ultrasonic Machining, Sintering, Laminating, Hot Dip Coating, Sputtering, Vapor Plating, Thermal Infusion, Salt Bath Descaling, Solvent Degreasing, Paint Stripping, Painting, Electrostatic Painting, Electropainting, Vacuum Metalizing, Assembly, Calibration, Testing, and Mechanical Plating.

(b) In some cases effluent limitations and standards for the following industrial categories may be effective and applicable to wastewater discharges from the metal finishing operations listed above. In such cases these Part 433 limits shall not apply and the following regulations shall apply:

- Nonferrous metal smelting and refining (40 CFR Part 421)
- Coil coating (40 CFR Part 465)
- Porcelain enameling (40 CFR Part 466)
- Battery manufacturing (40 CFR Part 461)
- Iron and steel (40 CFR Part 420)
- Metal casting foundries (40 CFR Part 464)
- Aluminum forming (40 CFR Part 467)
- Copper forming (40 CFR Part 468)
- Plastic molding and forming (40 CFR Part 463)
- Nonferrous forming (40 CFR Part 471)
- Electrical and electronic components (40 CFR Part 469)

(c) This part does not apply to: (1) Metallic platemaking and gravure cylinder preparation conducted within or for printing and publishing facilities; and (2) existing indirect discharging job shops and independent printed circuit board manufacturers which are covered by 40 CFR Part 413.)

[§433.10 amended at 48 FR 43682, Sept. 26, 1983; 48 FR 45105, Oct. 3, 1983; 51 FR 40421, Nov. 7, 1986]

§433.11 Specialized definitions.

The definitions set forth in 40 CFR Part 401 and the chemical analysis methods set forth in 40 CFR Part 136 are both incorporated here by reference. In addition, the following definitions apply to this part:

(a) The term "T", as in "Cyanide, T", shall mean total.

(b) The term "A", as in "Cyanide A", shall mean amenable to alkaline chlorination.

(c) The term "job shop" shall mean a facility which owns not more than 50% (annual area basis) of the materials undergoing metal finishing.

(d) The term "independent" printed circuit board manufacturer shall mean a facility which manufacturers printed circuit boards principally for sale to other companies.

(e) The term "TTO" shall mean total toxic organics, which is the summation of all quantifiable values greater than .01 milligrams per liter for the following toxic organics:

- Acenaphthene
- Acrolein
- Acrylonitrile
- Benzene
- Benzidine
- Carbon tetrachloride (tetrachloromethane)
- Chlorobenzene
- 1,2,4-Trichlorobenzene
- Hexachlorobenzene
- 1,2,-Dichloroethane
- 1,1,1-Trichloroethane
- Hexachloroethane

Copyright © 1992 by The Bureau of National Affairs, Inc.
0013-9211/92/$0+.50

1,1-Dichloroethane
1,1,2-Trichloroethane
1,1,2,2-Tetrachloroethane
Chloroethane
Bis (2-chloroethyl) ether
2-Chloroethyl vinyl ether (mixed)
2-Chloronaphthalene
2,4,6-Trichlorophenol
Parachlorometa cresol
Chloroform (trichloromethane)
2-Chlorophenol
1,2-Dichlorobenzene
1,3-Dichlorobenzene
1,4-Dichlorobenzene
3,3-Dichlorobenzidine
1,1-Dichloroethylene
1,2-Trans-dichloroethylene
2,4-Dichlorophenol
1,2-Dichloropropane
1,3-Dichloropropylene (1,3-dichloropropene)
2,4-Dimethylphenol
2,4-Dinitrotoluene
2,6-Dinitrotoluene
1,2-Diphenylhydrazine
Ethylbenzene
Fluoranthene
4-Chlorophenyl phenyl ether
4-Bromophenyl phenyl ether
Bis (2-chloroisopropyl) ether
Bis (2-chloroethoxy) methane
Methylene chloride (dichloromethane)
Methyl chloride (chloromethane)
Methyl bromide (bromomethane)
Bromoform (tribromomethane)
Dichlorobromomethane
Chlorodibromomethane
Hexachlorobutadiene
Hexachlorocyclopentadiene
Isophorone
Naphthalene
Nitrobenzene
2-Nitrophenol
4-Nitrophenol
2,4-Dinitrophenol
4,6-Dinitro-o-cresol
N-nitrosodimethylamine
N-nitrosodiphenylamine
N-nitrosodi-n-propylamine
Pentachlorophenol
Phenol
Bis (2-ethylhexyl) phthalate
Butyl benzyl phthalate
Di-n-butyl phthalate
Di-n-octyl phthalate
Diethyl phthalate
Dimethyl phthalate
1,2-Benzanthracene (benzo(a)anthracene)
Benzo(a)pyrene (3,4-benzopyrene)
3,4-Benzofluoranthene (benzo(b)fluoranthene)
11,12-Benzofluoranthene (benzo(k)fluoranthene)
Chrysene
Acenaphthylene
Anthracene
1,12-Benzoperylene (benzo(ghi)perylene)
Fluorene
Phenanthrene
1,2,5,6-Dibenzanthracene (dibenzo(a,h)anthracene)
Indeno(1,2,3-cd) pyrene (2,3-o-phenlene pyrene)
Pyrene
Tetrachloroethylene
Toluene
Trichloroethylene
Vinyl chloride (chloroethylene)
Aldrin
Dieldrin
Chlordane (technical mixture and metabolites)
4,4-DDT
4,4-DDE (p,p-DDX)
4,4-DDD (p,p-TDE)
Alpha-endosulfan
Beta-endosulfan
Endosulfan sulfate
Endrin
Endrin aldehyde
Heptachlor
Heptachlor epoxide
(BHC-hexachloro-cyclohexane)
Alpha-BHC
Beta-BHC
Gamma-BHC
Delta-BHC
(PCB-polychlorinated biphenyls)
PCB-1242 (Arochlor 1242)
PCB-1254 (Arochlor 1254)
PCB-1221 (Arochlor 1221)
PCB-1232 (Arochlor 1232)
PCB-1248 (Arochlor 1248)
PCB-1260 (Arochlor 1260)
PCB-1016 (Arochlor 1016)
Toxaphene
2,3,7,8-Tetrachlorodibenzo-p-dioxin (TCDD)

[§433.11 amended at 48 FR 43682, Sept. 26, 1983; 51 FR 40421, Nov. 7, 1986]

§433.12 Monitoring requirements.

(a) In lieu of requiring monitoring for TTO, the permitting authority (or, in the case of indirect dischargers, the control authority) may allow dischargers to make the following certification statement: "Based on my inquiry of the person or persons directly responsible for managing compliance with the permit limitation [or pretreatment standard] for total toxic organics (TTO), I certify that, to the best of my knowledge and belief, no dumping of concentrated toxic organics into the wastewaters has occurred since filing of the last discharge monitoring report. I further certify that this facility is implementing the toxic organic management plan submitted to the permitting [or control] authority." For direct dischargers, this statement is to be included as a "comment" on the Discharge Monitoring Report required by 40 CFR 122.44(i), formerly 40 CFR 122.62(i). For indirect dischargers, the statement is to be included as a comment to the periodic reports required by 40 CFR 403.12(e). If monitoring is necessary to measure compliance with the TTO standard, the industrial discharger need analyse for only those pollutants which would reasonably be expected to be present.

(b) In requesting the certification alternative, a discharger shall submit a solvent management plan that specifies to the satisfaction of the permitting authority (or, in the case of indirect dischargers, the control authority) the toxic organic compounds used; the method of disposal used instead of dumping, such as reclamation, contract hauling, or incineration; and procedures for ensuring that toxic organics do not routinely spill or leak into the wastewater. For direct dischargers, the permitting authority shall incorporate the plan as a provision of the permit.

(c) Self-monitoring for cyanide must be conducted after cyanide treatment and before dilution with other streams. Alternatively, samples may be taken of the final effluent, if the plant limitations are adjusted based on the dilution ratio of the cyanide waste stream flow to the effluent flow.

(Approved by the Office of Management and Budget under control number 2040-0074)

[§433.12 amended at 48 FR 43682, Sept 26, 1983; 49 FR 34823, Sept. 4, 1984]

[Sec. 433.12(c)]

trichlorotrifluoroethane

Evaluate trichlorotrifluoroethane RLWTF influent sampling results.

33 sampling events, 1 detection of trichlorofluoroethane, 32 nondetections.

DETECTED CONC (mg/L)
0.0172
0
0
0
0
0
0
0
0
0
0
0
0
0
0
0
0
0
0
0
0
0
0
0
0
0
0
0
0
0
0
0
0

Mean = 0.00052 mg/L.
Std Dev = 0.00295
Variance = 0.00001
Std Err of Mean = 0.00051

The mean is less than the standard deviation. Therefore, the data is characterized by a negative binomial distribution, and must be normalized through use of the arcsin transformation (EPA SW-846, pg. NINE-10).

Use the arcsin transformation, as described in Statistics For Experimenters, (Box, Hunter, and Hunter. Wiley and Sons Publishers, 1978).

Convert detected concentrations to percentages of the regulatory threshold (RT), (for trichlorotrifluoroethane RT = 25 mg/L, per 40 CFR 261.3)

then calculate transformed values (x) from the equation:

sin x = sqrt (p) ; where p = det.conc/RT, and x is measured in grads.

DETECTED CONC (mg/L)	DET CONC PERCENT OF RT	x arcsin [sqrt (p)]
0.0172	0.0688	1.67
0	0	0
0	0	0
0	0	0
0	0	0
0	0	0
0	0	0
0	0	0
0	0	0
0	0	0
0	0	0
0	0	0
0	0	0
0	0	0
0	0	0
0	0	0
0	0	0
0	0	0
0	0	0
0	0	0
0	0	0
0	0	0
0	0	0
0	0	0
0	0	0
0	0	0
0	0	0
0	0	0
0	0	0
0	0	0
0	0	0
0	0	0
0	0	0
0	0	0
0	0	0
0	0	0
RT = 25 mg/L	100	100

Perform all subsequent calculations on transformed data (x values, from table, above).

Mean = 0.051
Std Dev = 0.286
Std Err of Mean = 0.050

Calculate the upper limit of the 80% confidence interval (CI), in accordance with SW-846 guidance [pg NINE-6, and equation (6) in Table 9-1].

Upper limit of 80% CI = 0.116
trichlorotrifluoroethane RT, transformed : 100

Upper limit of 80% confidence interval is less than the RT for trichlorotrifluoroethane. Therefore, trichlorotrifluoroethane is "not considered to be present in the waste at a hazardous level".

toluene

Evaluate toluene RLWTF influent sampling results.

33 sampling events, 10 detections of toluene, 23 nondetections.

DETECTED CONC (mg/L)
0.0498
0.3824
0.1467
1
0.7853
0.8232
0.023
0.0212
0.0259
0.0057
0
0
0
0
0
0
0
0
0
0
0
0
0
0
0
0
0
0
0
0
0
0

Mean =	0.099 mg/L
Std Dev =	0.2548
Variance =	0.0649
Std Err of Mean =	0.0443

The mean is less than the standard deviation. Therefore, the data is characterized by a negative binomial distribution, and must be normalized through use of the arcsin transformation (EPA SW-846, pg. NINE-10).

Use the arcsin transformation, as described in Statistics For Experimenters, (Box, Hunter, and Hunter. Wiley and Sons Publishers, 1978).

Convert detected concentrations to percentages of the regulatory threshold (RT), (for toluene RT = 25 mg/L, per 40 CFR 261.3)

then calculate transformed values (x) from the equation:

sin x = sqrt (p) ; where p = det.conc/RT, and x is measured in grads.

DETECTED CONC (mg/L)	DET CONC PERCENT OF RT	x arcsin [sqrt (p)]
0.0498	0.1992	2.8423
0.3824	1.5296	7.8937
0.1467	0.5868	4.8815
1	4	12.8188
0.7853	3.1412	11.343
0.8232	3.2928	11.6165
0.023	0.092	1.9313
0.0212	0.0848	1.8541
0.0259	0.1036	2.0494
0.0057	0.0228	0.9613
0	0	0
0	0	0
0	0	0
0	0	0
0	0	0
0	0	0
0	0	0
0	0	0
0	0	0
0	0	0
0	0	0
0	0	0
0	0	0
0	0	0
0	0	0
0	0	0
0	0	0
0	0	0
0	0	0
0	0	0
0	0	0
0	0	0
0	0	0
RT = 25 mg/L	100	100

Perform all subsequent calculations on transformed data (x values, from table, above).

Mean = 1.763
Std Dev = 3.617
Std Err of Mean = 0.630

Calculate the upper limit of the 80% confidence interval (CI), in accordance with SW-846 guidance [pg NINE-6, and equation (6) in Table 9-1].

Upper limit of 80% CI = 2.588
toluene RT, transformed = 100

Upper limit of 80% confidence interval is less than the RT for toluene. Therefore, toluene is "not considered to be present in the waste at a hazardous level".

HISTORICAL (1988 - 1992) RLWTP INFLUENT DATA

THE HISTORICAL RLWTP INFLUENT DATA HAS BEEN STATISTICALLY ANALYZED IN CONFORMANCE WITH THE REQUIREMENTS OF EPA SW-846 "TEST METHODS FOR EVALUATION OF SOLID WASTE" TO DETERMINE THAT NO RCRA F-LISTED WASTES WERE PRESENT AT THEIR REGULATORY THRESHOLD VALUES. A "LOTUS 123" SPREADSHEET WAS DEVELOPED TO AID THE STATISTICAL ANALYSIS. THE PURPOSE OF THIS HAND CALCULATION IS TO VERIFY RESULTS OBTAINED FROM THE SPREADSHEET.

(1) CALCULATE MEAN, VARIANCE, STANDARD DEVIATION, AND STANDARD ERROR OF THE MEAN FOR EACH SET OF ANALYTICAL DATA. METHYLENE CHLORIDE DETECTIONS IN THE RLWTP INFLUENT FROM 1988 TO 1992 ARE USED AS AN EXAMPLE, AND VERIFICATION OF SPREADSHEET RESULTS

METHYLENE CHLORIDE CONCENTRATIONS (mg/L)

0.5564	0.0720
1.7276	0.0140
1.4143	0.0094
1.4114	0.0530
1.2156	0.0140
1.2287	0.2300
0.0255	0.2600
0.0263	
6.5000	
0.0061	
0.0610	
0.0968	
6.3000	
0.0590	

33 SAMPLING/ANALYSIS EVENTS
12 NONDETECTIONS, 21 DETECTIONS
AS SHOWN (LEFT)

x_i = INDIVIDUAL SAMPLING RESULT
n = NUMBER OF SAMPLES
$\bar{x}$ = MEAN
s = STANDARD DEVIATION
s^2 = VARIANCE
$s_{\bar{x}}$ = STD ERROR OF THE MEAN

FIRST, CALCULATE $\bar{x}$:

$$\bar{x} = \left(\sum_{i=1}^{i=21} x_i \right) / n$$

$$\bar{x} = 21.7811 / 33$$

$$\bar{x} = 0.660 \text{ mg/L}$$

CALCULATE VARIANCE (s^2)

$$s^2 = \left[\sum_{i=1}^{i=33} x_i^2 - \left(\sum_{i=1}^{i=33} x_i\right)^2 / n \right] / (n-1)$$

$$s^2 = \left[98.91 - (21.7811)^2/33 \right] / 32 = 2.64$$

CALCULATE STD DEVIATION (s)

$$s = \sqrt{s^2} = \sqrt{2.64} = 1.62$$

CALCULATE STD ERROR OF THE MEAN

$$s_{\bar{x}} = s/\sqrt{n} = 1.62/\sqrt{33} = 0.283$$

CHECK: IS $\bar{x}$ FOR METHYLENE CHLORIDE EQUAL TO OR GREATER THAN ITS REGULATORY THRESHOLD?

RT = 25 ppm (ref 40 CFR 261.3)

$\bar{x}$ IS LESS THAN RT, THEREFORE CONTINUE STUDY.

CHECK: IS $\bar{x}$ GREATER THAN s^2? NO – THEREFORE DATA IS NOT NORMALLY DISTRIBUTED AND MUST BE TRANFORMED.

USE THE ARCSIN TRANSFORMATION FROM <u>STATISTICS FOR EXPERIMENTERS</u>, Box, Hunter & Hunter WILEY PUBL., 1978.

HISTORICAL (1988 - 1992) RLWTP INFLUENT DATA

THE HISTORICAL RLWTP INFLUENT DATA HAS BEEN STATISTICALLY ANALYZED IN CONFORMANCE WITH THE REQUIREMENTS OF EPA SW-846 "TEST METHODS FOR EVALUATION OF SOLID WASTE" TO DETERMINE THAT NO RCRA F-LISTED WASTES WERE PRESENT AT THEIR REGULATORY THRESHOLD VALUES. A "LOTUS 123" SPREADSHEET WAS DEVELOPED TO AID THE STATISTICAL ANALYSIS. THE PURPOSE OF THIS HAND CALCULATION IS TO VERIFY RESULTS OBTAINED FROM THE SPREADSHEET.

(1) CALCULATE MEAN, VARIANCE, STANDARD DEVIATION, AND STANDARD ERROR OF THE MEAN FOR EACH SET OF ANALYTICAL DATA. METHYLENE CHLORIDE DETECTIONS IN THE RLWTP INFLUENT FROM 1988 TO 1992 ARE USED AS AN EXAMPLE, AND VERIFICATION OF SPREADSHEET RESULTS

METHYLENE CHLORIDE CONCENTRATIONS (mg/L)

0.5564	0.0720
1.7276	0.0140
1.4143	0.0094
1.4114	0.0530
1.2156	0.0140
1.2287	0.2300
0.0255	0.2600
0.0263	
6.5000	
0.0061	
0.0610	
0.0968	
6.8000	
0.0590	

33 SAMPLING/ANALYSIS EVENTS
12 NONDETECTIONS, 21 DETECTIONS
AS SHOWN (LEFT)

x_i = INDIVIDUAL SAMPLING RESULT
n = NUMBER OF SAMPLES
$\bar{x}$ = MEAN
s = STANDARD DEVIATION
s^2 = VARIANCE
$s_{\bar{x}}$ = STD ERROR OF THE MEAN

FIRST, CALCULATE $\bar{x}$:

$$\bar{x} = \left(\sum_{i=1}^{i=21} x_i \right) / n$$

$$\bar{x} = 21.7311 / 33$$

$$\bar{x} = 0.660 \text{ mg/L}$$

CALCULATE VARIANCE (s^2)

$$s^2 = \left[\sum_{i=1}^{i=33} x_i^2 - \left(\sum_{i=1}^{i=33} x_i\right)^2 / n \right] / (n-1)$$

$$s^2 = \left[98.91 - (21.7811)^2/33 \right] / 32 = 2.64$$

CALCULATE STD DEVIATION (s)

$$s = \sqrt{s^2} = \sqrt{2.64} = 1.62$$

CALCULATE STD ERROR OF THE MEAN

$$s_{\bar{x}} = s/\sqrt{n} = 1.62/\sqrt{33} = 0.283$$

CHECK: IS $\bar{x}$ FOR METHYLENE CHLORIDE EQUAL TO OR GREATER THAN ITS REGULATORY THRESHOLD?

RT = 25 ppm (ref 40 CFR 261.3)

$\bar{x}$ IS LESS THAN RT, THEREFORE CONTINUE STUDY.

CHECK: IS $\bar{x}$ GREATER THAN s^2? NO - THEREFORE DATA IS NOT NORMALLY DISTRIBUTED AND MUST BE TRANFORMED.

USE THE ARCSIN TRANSFORMATION FROM <u>STATISTICS FOR EXPERIMENTERS</u>, Box, Hunter & Hunter WILEY PUBL., 1973.

APPENDIX B

Historical (1988 - 1992) Influent Sampling Results, Statistical Analysis of Historical Sampling Results, EPA Guidance for Statistical Analysis (EPA SW-846, 1986)

Evaluation of Historical (May 1988 – December 1992) RLWTF Influent VOC/SVOC Sampling Results to Characterize Influent as "Solid" or "Hazardous" Waste, per EPA SW–846.

1. The mean, standard deviation, variance, and standard error of the mean must be determined for each chemical contaminant.

2. The mean is compared to the standard deviation. If the mean is greater than the standard deviation, the data are assumed to be normally distributed. If the mean is less than the standard deviation, the data must be transformed prior to statistical analysis.

3. Analyze 1,1,1–trichloroethane RLWTF influent sampling results.
   33 sampling events, 15 detections of 1,1,1–trichloroethane, 18 nondetections.

DETECTED CONC (mg/L)
0.0255
0.2743
0.0538
4.223
2.8875
2.8859
0.13
0.45
0.041
0.0402
0.0124
0.09
0.1101
0.0091
0.068
0
0
0
0
0
0
0
0
0
0
0
0
0
0
0
0
0

Mean =	0.342 mg/L
Std Dev =	0.9685
Variance =	0.9381
Std Err of Mean =	0.1686

The mean is less than the standard deviation. Therefore, the data is characterized by a negative binomial distribution, and must be normalized through use of the arcsin transformation (EPA SW–846, pg. NINE–10).

4. Use the arcsin transformation, as described in Statistics For Experimenters, (Box, Hunter, and Hunter. Wiley and Sons Publishers, 1978).
Convert detected concentrations to percentages of the regulatory threshold (RT), (for 1,1,1–trichloroethane RT = 25 mg/L, per 40 CFR 261.3) then calculate transformed values (x) from the equation:

sin x = sqrt (p) ; where p = det.conc/RT, and x is measured in grads.

DETECTED CONC (mg/L)	DET CONC PERCENT OF RT	x arcsin [sqrt (p)]
0.0255	0.102	2.0335
0.2743	1.0972	6.6807
0.0538	0.2152	2.9543
4.223	16.892	26.964
2.8875	11.55	22.0755
2.8859	11.5436	22.0691
0.13	0.52	4.5947
0.45	1.8	8.567
0.041	0.164	2.5788
0.0402	0.1608	2.5535
0.0124	0.0496	1.4179
0.09	0.36	3.822
0.1101	0.4404	4.2279
0.0091	0.0364	1.2147
0.068	0.272	3.3217
0	0	0
0	0	0
0	0	0
0	0	0
0	0	0
0	0	0
0	0	0
0	0	0
0	0	0
0	0	0
0	0	0
0	0	0
0	0	0
0	0	0
0	0	0
0	0	0
0	0	0
0	0	0
RT = 25 mg/L	100	100

Perform all subsequent calculations on transformed data (x values, from table, above).

Mean =	3.487
Std Dev =	6.770
Std Err of Mean =	1.178

5. Calculate the upper limit of the 80% confidence interval (CI), in accordance with SW-846 guidance [pg NINE-6, and equation (6) in Table 9-1].

Upper limit of 80% CI =	5.031
1,1,1-trichloroethane RT, transformed =	100

Upper limit of 80% confidence interval is less than the RT for 1,1,1-trichloroethane. Therefore, 1,1,1,-trichloroethane is "not considered to be present in the waste at a hazardous level".

1,1,2–trichloroethane

Analyze 1,1,2–trichloroethane RLWTF influent sampling results.

33 sampling events, 2 detections of 1,1,2–trichloroethane, 31 nondetections.

DETECTED CONC (mg/L)
0.0712
0.0711
0
0
0
0
0
0
0
0
0
0
0
0
0
0
0
0
0
0
0
0
0
0
0
0
0
0
0
0
0
0
0
0
0

Mean =	0.004 mg/L
Std Dev =	0.0170
Variance =	0.0003
Std Err of Mean =	0.0030

The mean is less than the standard deviation.
Therefore, the data is characterized by a negative
binomial distribution, and must be normalized
through use of the arcsin transformation
(EPA SW–846, pg. NINE–10).

Use the arcsin transformation, as described in Statistics For Experimenters, (Box, Hunter, and Hunter. Wiley and Sons Publishers, 1978).

Convert detected concentrations to percentages of the regulatory threshold (RT), (for 1,1,2–trichloroethane RT = 1 mg/L, per 40 CFR 261.3) then calculate transformed values (x) from the equation:

sin x = sqrt (p) ; where p = det.conc/RT, and x is measured in grads.

DETECTED CONC (mg/L)	DET CONC PERCENT OF RT	x arcsin [sqrt (p)]
0.0712	7.12	17.1955
0.0711	7.11	17.1831
0	0	0
0	0	0
0	0	0
0	0	0
0	0	0
0	0	0
0	0	0
0	0	0
0	0	0
0	0	0
0	0	0
0	0	0
0	0	0
0	0	0
0	0	0
0	0	0
0	0	0
0	0	0
0	0	0
0	0	0
0	0	0
0	0	0
0	0	0
0	0	0
0	0	0
0	0	0
0	0	0
0	0	0
0	0	0
0	0	0
0	0	0
0	0	0
RT = 1 mg/L	100	100

Perform all subsequent calculations on transformed data (x values, from table, above).

Mean =	1.042
Std Dev =	4.101
Std Err of Mean =	0.714

Calculate the upper limit of the 80% confidence interval (CI), in accordance with SW-846 guidance [pg NINE-6, and equation (6) in Table 9-1].

Upper limit of 80% CI =	1.977
1,1,1-trichloroethane RT, transformed =	100

Upper limit of 80% confidence interval is less than the RT for 1,1,2-trichloroethane. Therefore, 1,1,2,-trichloroethane is "not considered to be present in the waste at a hazardous level".

2-butanone

Evaluate 2-butanone RLWTF influent sampling results.

33 sampling events, 9 detections of 2-butanone, 24 nondetections.

DETECTED CONC (mg/L)
0.0208
0.0006
0.1548
0.1167
0.1361
0.149
0.065
0.37
0.18
0
0
0
0
0
0
0
0
0
0
0
0
0
0
0
0
0
0
0
0
0
0
0
0
0
0

Mean =	0.036 mg/L
Std Dev =	0.0796
Variance =	0.0063
Std Err of Mean =	0.0138

The mean is less than the standard deviation. Therefore, the data is characterized by a negative binomial distribution, and must be normalized through use of the arcsin transformation (EPA SW-846, pg. NINE-10).

Use the arcsin transformation, as described in Statistics For Experimenters, (Box, Hunter, and Hunter. Wiley and Sons Publishers, 1978).

Convert detected concentrations to percentages of the regulatory threshold (RT), (for 2-butanone RT = 25 mg/L, per 40 CFR 261.3)

then calculate transformed values (x) from the equation:

sin x = sqrt (p) ; where p = det.conc/RT, and x is measured in grads.

DETECTED CONC (mg/L)	DET CONC PERCENT OF RT	x arcsin [sqrt (p)]
0.0208	0.0832	1.8365
0.0006	0.0024	0.3119
0.1548	0.6192	5.0147
0.1167	0.4668	4.353
0.1361	0.5444	4.7015
0.149	0.596	4.9197
0.065	0.26	3.2475
0.37	1.48	7.764
0.18	0.72	5.4084
0	0	0
0	0	0
0	0	0
0	0	0
0	0	0
0	0	0
0	0	0
0	0	0
0	0	0
0	0	0
0	0	0
0	0	0
0	0	0
0	0	0
0	0	0
0	0	0
0	0	0
0	0	0
0	0	0
0	0	0
0	0	0
0	0	0
0	0	0
0	0	0
RT = 25 mg/L	100	100

Perform all subsequent calculations on transformed data (x values, from table, above).

Mean = 1.138
Std Dev = 2.141
Std Err of Mean = 0.373

Calculate the upper limit of the 80% confidence interval (CI), in accordance with SW-846 guidance [pg NINE-6, and equation (6) in Table 9-1].

Upper limit of 80% CI = 1.626
2-butanone RT, transformed = 100

Upper limit of 80% confidence interval is less than the RT for 2-butanone. Therefore, 2-butanone is "not considered to be present in the waste at a hazardous level".

benzene

Evaluate benzene RLWTF influent sampling results.

33 sampling events, 5 detections of benzene, 28 nondetections.

DETECTED CONC (mg/L)
0.0066
0.0031
0.0091
0.0065
0.0063
0
0
0
0
0
0
0
0
0
0
0
0
0
0
0
0
0
0
0
0
0
0
0
0
0
0
0
0
0
0

Mean =	0.001 mg/L
Std Dev =	0.0023
Variance =	0.0000
Std Err of Mean =	0.0004

The mean is less than the standard deviation. Therefore, the data is characterized by a negative binomial distribution, and must be normalized through use of the arcsin transformation (EPA SW-846, pg. NINE-10).

4. Use the arcsin transformation, as described in Statistics For Experimenters, (Box, Hunter, and Hunter. Wiley and Sons Publishers, 1978).

   Convert detected concentrations to percentages of the regulatory threshold (RT), (for benzene RT = 1 mg/L, per 40 CFR 261.3)

   then calculate transformed values (x) from the equation:

   sin x = sqrt (p) ; where p = det.conc/RT, and x is measured in grads.

DETECTED CONC (mg/L)	DET CONC PERCENT OF RT	x arcsin [sqrt (p)]
0.0066	0.66	5.1776
0.0031	0.31	3.5464
0.0091	0.91	6.0822
0.0065	0.65	5.1382
0.0063	0.63	5.0583
0	0	0
0	0	0
0	0	0
0	0	0
0	0	0
0	0	0
0	0	0
0	0	0
0	0	0
0	0	0
0	0	0
0	0	0
0	0	0
0	0	0
0	0	0
0	0	0
0	0	0
0	0	0
0	0	0
0	0	0
0	0	0
0	0	0
0	0	0
0	0	0
0	0	0
0	0	0
0	0	0
0	0	0
0	0	0
0	0	0
RT = 1 mg/L	100	100

Perform all subsequent calculations on transformed data (x values, from table, above).

Mean = 0.758
Std Dev = 1.821
Std Err of Mean = 0.317

Calculate the upper limit of the 80% confidence interval (CI), in accordance with SW-846 guidance [pg NINE-6, and equation (6) in Table 9-1].

Upper limit of 80% CI = 1.173
benzene RT, transformed = 100

Upper limit of 80% confidence interval is less than the RT for benzene. Therefore, benzene is "not considered to be present in the waste at a hazardous level".

chlorobenzene

Evaluate chlorobenzene RLWTF influent sampling results.

33 sampling events, 4 detections of chlorobenzene, 29 nondetections.

DETECTED CONC (mg/L)
0.0031
0.0026
0.0012
0.001
0
0
0
0
0
0
0
0
0
0
0
0
0
0
0
0
0
0
0
0
0
0
0
0
0
0
0
0
0
0

Mean = 0.00024 mg/L
Std Dev = 0.00072
Variance = 0.00000
Std Err of Mean = 0.00012

The mean is less than the standard deviation. Therefore, the data is characterized by a negative binomial distribution, and must be normalized through use of the arcsin transformation (EPA SW-846, pg. NINE-10).

Use the arcsin transformation, as described in Statistics For Experimenters, (Box, Hunter, and Hunter. Wiley and Sons Publishers, 1978).

Convert detected concentrations to percentages of the regulatory threshold (RT), (for chlorobenzene RT = 25 mg/L, per 40 CFR 261.3)

then calculate transformed values (x) from the equation:

sin x = sqrt (p) ; where p = det.conc/RT, and x is measured in grads.

DETECTED CONC (mg/L)	DET CONC PERCENT OF RT	x arcsin [sqrt (p)]
0.0031	0.0124	0.7089
0.0026	0.0104	0.6492
0.0012	0.0048	0.4411
0.001	0.004	0.4026
0	0	0
0	0	0
0	0	0
0	0	0
0	0	0
0	0	0
0	0	0
0	0	0
0	0	0
0	0	0
0	0	0
0	0	0
0	0	0
0	0	0
0	0	0
0	0	0
0	0	0
0	0	0
0	0	0
0	0	0
0	0	0
0	0	0
0	0	0
0	0	0
0	0	0
0	0	0
0	0	0
0	0	0
0	0	0
0	0	0
RT = 25 mg/L	100	100

Perform all subsequent calculations on transformed data (x values, from table, above).

Mean = 0.067
Std Dev = 0.185
Std Err of Mean = 0.032

Calculate the upper limit of the 80% confidence interval (CI), in accordance with SW-846 guidance [pg NINE-6, and equation (6) in Table 9-1].

Upper limit of 80% CI = 0.109
chlorobenzene RT, transformed = 100

Upper limit of 80% confidence interval is less than the RT for chlorobenzene. Therefore, chlorobenzene is "not considered to be present in the waste at a hazardous level".

carbon disulfide

Evaluate carbon disulfide RLWTF influent sampling results.

33 sampling events, 9 detections of carbon disulfide, 24 nondetections.

DETECTED CONC (mg/L)
1.2583
4.2872
3.3453
7.3746
5.9829
6.2935
0.011
0.16
0.0116
0
0
0
0
0
0
0
0
0
0
0
0
0
0
0
0
0
0
0
0
0
0
0
0

Mean =	0.870 mg/L
Std Dev =	2.0298
Variance =	4.1201
Std Err of Mean =	0.3533

The mean is less than the standard deviation. Therefore, the data is characterized by a negative binomial distribution, and must be normalized through use of the arcsin transformation (EPA SW-846, pg. NINE-10).

Use the arcsin transformation, as described in Statistics For Experimenters, (Box, Hunter, and Hunter. Wiley and Sons Publishers, 1978).

Convert detected concentrations to percentages of the regulatory threshold (RT), (for carbon disulfide RT = 25 mg/L, per 40 CFR 261.3)

then calculate transformed values (x) from the equation:

sin x = sqrt (p) ; where p = det.conc/RT, and x is measured in grads.

DETECTED CONC (mg/L)	DET CONC PERCENT OF RT	x arcsin [sqrt (p)]
1.2583	5.0332	14.405
4.2872	17.1488	27.182
3.3453	13.3812	23.841
7.3746	29.4984	36.552
5.9829	23.9316	32.542
6.2935	25.174	33.461
0.011	0.044	1.336
0.16	0.64	5.098
0.0116	0.0464	1.371
0	0	0
0	0	0
0	0	0
0	0	0
0	0	0
0	0	0
0	0	0
0	0	0
0	0	0
0	0	0
0	0	0
0	0	0
0	0	0
0	0	0
0	0	0
0	0	0
0	0	0
0	0	0
0	0	0
0	0	0
0	0	0
0	0	0
0	0	0
0	0	0
RT = 25 mg/L	100	100

Perform all subsequent calculations on transformed data (x values, from table, above).

Mean = 5.327
Std Dev = 11.177
Std Err of Mean = 1.946

Calculate the upper limit of the 80% confidence interval (CI), in accordance with SW-846 guidance [pg NINE-6, and equation (6) in Table 9-1].

Upper limit of 80% CI = 7.876
carbon disulfide RT, transformed = 100

Upper limit of 80% confidence interval is less than the RT for carbon disulfide. Therefore, carbon disulfide is "not considered to be present in the waste at a hazardous level".

carbon tetrachloride

Evaluate carbon tetrachloride RLWTF influent sampling results.

33 sampling events, 5 detections of carbon tetrachloride, 28 nondetections.

DETECTED CONC (mg/L)
0.0009
0.0037
0.0015
0.0007
0.0165
0
0
0
0
0
0
0
0
0
0
0
0
0
0
0
0
0
0
0
0
0
0
0
0
0
0
0
0

Mean =	0.001 mg/L
Std Dev =	0.00288
Variance =	0.00001
Std Err of Mean =	0.00050

The mean is less than the standard deviation.
Therefore, the data is characterized by a negative
binomial distribution, and must be normalized
through use of the arcsin transformation
(EPA SW-846, pg. NINE-10).

Use the arcsin transformation, as described in Statistics For Experimenters, (Box, Hunter, and Hunter. Wiley and Sons Publishers, 1978).

Convert detected concentrations to percentages of the regulatory threshold (RT), (for carbon tetrachloride RT = 1 mg/L, per 40 CFR 261.3)

then calculate transformed values (x) from the equation:

sin x = sqrt (p) ; where p = det.conc/RT, and x is measured in grads.

DETECTED CONC (mg/L)	DET CONC PERCENT OF RT	x arcsin [sqrt (p)]
0.0009	0.09	1.9101
0.0037	0.37	3.8748
0.0015	0.15	2.4662
0.0007	0.07	1.6845
0.0165	1.65	8.2002
0	0	0
0	0	0
0	0	0
0	0	0
0	0	0
0	0	0
0	0	0
0	0	0
0	0	0
0	0	0
0	0	0
0	0	0
0	0	0
0	0	0
0	0	0
0	0	0
0	0	0
0	0	0
0	0	0
0	0	0
0	0	0
0	0	0
0	0	0
0	0	0
0	0	0
0	0	0
0	0	0
0	0	0
0	0	0
0	0	0
0	0	0
RT = 1 mg/L	100	100

Perform all subsequent calculations on transformed data (x values, from table, above).

Mean =	0.550
Std Dev =	1.604
Std Err of Mean =	0.279

Calculate the upper limit of the 80% confidence interval (CI), in accordance with SW-846 guidance [pg NINE-6, and equation (6) in Table 9-1].

Upper limit of 80% CI =	0.915
carbon tetrachloride RT, transformed =	100

Upper limit of 80% confidence interval is less than the RT for carbon tetrachloride. Therefore, carbon tetrachloride is "not considered to be present in the waste at a hazardous level".

trichloroethene

Evaluate trichloroethene RLWTF influent sampling results.

33 sampling events, 5 detections of trichloroethene, 28 nondetections.

DETECTED CONC (mg/L)
0.0051
0.0004
0.052
0.0368
0.0392
0
0
0
0
0
0
0
0
0
0
0
0
0
0
0
0
0
0
0
0
0
0
0
0
0
0
0
0
0
0

Mean = 0.00405 mg/L.
Std Dev = 0.01241
Variance = 0.00015
Std Err of Mean = 0.00216

The mean is less than the standard deviation. Therefore, the data is characterized by a negative binomial distribution, and must be normalized through use of the arcsin transformation (EPA SW-846, pg. NINE-10).

Use the arcsin transformation, as described in Statistics For Experimenters, (Box, Hunter, and Hunter. Wiley and Sons Publishers, 1978).

Convert detected concentrations to percentages of the regulatory threshold (RT), (for trichloroethene RT = 1 mg/L, per 40 CFR 261.3)

then calculate transformed values (x) from the equation:

sin x = sqrt (p) ; where p = det.conc/RT, and x is measured in grads.

DETECTED CONC (mg/L)	DET CONC PERCENT OF RT	x arcsin [sqrt (p)]
0.0051	0.51	4.5502
0.0004	0.04	1.2733
0.052	5.2	14.646
0.0368	3.68	12.2887
0.0392	3.92	12.6883
0	0	0
0	0	0
0	0	0
0	0	0
0	0	0
0	0	0
0	0	0
0	0	0
0	0	0
0	0	0
0	0	0
0	0	0
0	0	0
0	0	0
0	0	0
0	0	0
0	0	0
0	0	0
0	0	0
0	0	0
0	0	0
0	0	0
0	0	0
0	0	0
0	0	0
0	0	0
0	0	0
0	0	0
0	0	0
RT = 1 mg/L	100	100

Perform all subsequent calculations on transformed data (x values, from table, above).

Mean = 1.377
Std Dev = 3.839
Std Err of Mean = 0.668

Calculate the upper limit of the 80% confidence interval (CI), in accordance with SW-846 guidance [pg NINE-6, and equation (6) in Table 9-1].

Upper limit of 80% CI = 2.253
trichloroethene RT, transformed = 100

Upper limit of 80% confidence interval is less than the RT for trichloroethene. Therefore, trichloroethene is "not considered to be present in the waste at a hazardous level".

methylene chloride

Evaluate methylene chloride RLWTF influent sampling results.

33 sampling events, 21 detections of methylene chloride, 12 nondetections.

DETECTED CONC (mg/L)
0.5564
1.7276
1.4143
1.4114
1.2156
1.2287
0.0255
0.0263
6.5
0.0061
0.061
0.0968
6.8
0.059
0.072
0.014
0.0094
0.053
0.014
0.23
0.26
0
0
0
0
0
0
0
0
0
0
0

Mean =	0.660 mg/L.
Std Dev =	1.600
Variance =	2.561
Std Err of Mean =	0.278

The mean is less than the standard deviation. Therefore, the data is characterized by a negative binomial distribution, and must be normalized through use of the arcsin transformation (EPA SW-846, pg. NINE-10).

Use the arcsin transformation, as described in Statistics For Experimenters, (Box, Hunter, and Hunter. Wiley and Sons Publishers, 1978).

Convert detected concentrations to percentages of the regulatory threshold (RT), (for methylene chloride RT = 25 mg/L, per 40 CFR 261.3)

then calculate transformed values (x) from the equation:

sin x = sqrt (p) ; where p = det.conc/RT, and x is measured in grads.

DETECTED CONC (mg/L)	DET CONC PERCENT OF RT	x arcsin [sqrt (p)]
0.5564	2.2256	9.533
1.7276	6.9104	16.9342
1.4143	5.6572	15.2884
1.4114	5.6456	15.2725
1.2156	4.8624	14.1543
1.2287	4.9148	14.2317
0.0255	0.102	2.0335
0.0263	0.1052	2.0652
6.5	26	34.0637
0.0061	0.0244	0.9945
0.061	0.244	3.1459
0.0968	0.3872	3.964
6.8	27.2	34.9282
0.059	0.236	3.0939
0.072	0.288	3.4181
0.014	0.056	1.5067
0.0094	0.0376	1.2345
0.053	0.212	2.9323
0.014	0.056	1.5067
0.23	0.92	6.1156
0.26	1.04	6.5036
0	0	0
0	0	0
0	0	0
0	0	0
0	0	0
0	0	0
0	0	0
0	0	0
0	0	0
0	0	0
0	0	0
0	0	0
RT = 25 mg/L	100	100

Perform all subsequent calculations on transformed data (x values, from table, above).

Mean = 5.846
Std Dev = 8.962
Std Err of Mean = 1.560

Calculate the upper limit of the 80% confidence interval (CI), in accordance with SW-846 guidance [pg NINE-6, and equation (6) in Table 9-1].

Upper limit of 80% CI = 7.890
methylene chloride RT, tranformed = 100

Upper limit of 80% confidence interval is less than the RT for methylene chloride. Therefore, methylene chloride is "not considered to be present in the waste at a hazardous level".

o–dichlorobenzene

Evaluate o–dichlorobenzene RLWTF influent sampling results.

33 sampling events, 1 detection of o–dichlorobenzene, 32 nondetections.

DETECTED CONC (mg/L)
0.0005
0
0
0
0
0
0
0
0
0
0
0
0
0
0
0
0
0
0
0
0
0
0
0
0
0
0
0
0
0
0
0
0

Mean = 0.00002 mg/L
Std Dev = 0.00009
Variance = 0.00000
Std Err of Mean = 0.00001

The mean is less than the standard deviation. Therefore, the data is characterized by a negative binomial distribution, and must be normalized through use of the arcsin transformation (EPA SW–846, pg. NINE–10).

Use the arcsin transformation, as described in Statistics For Experimenters, (Box, Hunter, and Hunter. Wiley and Sons Publishers, 1978).

Convert detected concentrations to percentages of the regulatory threshold (RT), (for o–dichlorobenzene RT = 25 mg/L, per 40 CFR 261.3)

then calculate transformed values (x) from the equation:

sin x = sqrt (p) ; where p = det.conc/RT, and x is measured in grads.

DETECTED CONC (mg/L)	DET CONC PERCENT OF RT	x arcsin [sqrt (p)]
0.0005	0.002	0.2847
0	0	0
0	0	0
0	0	0
0	0	0
0	0	0
0	0	0
0	0	0
0	0	0
0	0	0
0	0	0
0	0	0
0	0	0
0	0	0
0	0	0
0	0	0
0	0	0
0	0	0
0	0	0
0	0	0
0	0	0
0	0	0
0	0	0
0	0	0
0	0	0
0	0	0
0	0	0
0	0	0
0	0	0
0	0	0
0	0	0
0	0	0
0	0	0
0	0	0
0	0	0
0	0	0
RT = 25 mg/L	100	100

Perform all subsequent calculations on transformed data (x values, from table, above).

Mean = 0.009
Std Dev = 0.049
Std Err of Mean = 0.008

Calculate the upper limit of the 80% confidence interval (CI), in accordance with SW-846 guidance [pg NINE-6, and equation (6) in Table 9-1].

Upper limit of 80% CI = 0.020
o-dichlorobenzene RT, transformed = 100

Upper limit of 80% confidence interval is less than the RT for o-dichlorobenzene. Therefore, o-dichlorobenzene is "not considered to be present in the waste at a hazardous level".

tetrachloroethene

Evaluate tetrachloroethene RLWTF influent sampling results.

33 sampling events, 6 detections of tetrachloroethene, 27 nondetections.

DETECTED CONC (mg/L)
0.0255
0.1379
0.0938
0.072
0.07
0.0674
0
0
0
0
0
0
0
0
0
0
0
0
0
0
0
0
0
0
0
0
0
0
0
0
0
0
0
0
0

Mean = 0.01414 mg/L
Std Dev = 0.03325
Variance = 0.00111
Std Err of Mean = 0.00579

The mean is less than the standard deviation. Therefore, the data is characterized by a negative binomial distribution, and must be normalized through use of the arcsin transformation (EPA SW-846, pg. NINE-10).

Use the arcsin transformation, as described in Statistics For Experimenters, (Box, Hunter, and Hunter. Wiley and Sons Publishers, 1978).

Convert detected concentrations to percentages of the regulatory threshold (RT), (for tetrachloroethene RT = 1 mg/L, per 40 CFR 261.3)

then calculate transformed values (x) from the equation:

sin x = sqrt (p) ; where p = det.conc/RT, and x is measured in grads.

DETECTED CONC (mg/L)	DET CONC PERCENT OF RT	x arcsin [sqrt (p)]
0.0255	2.55	10.2097
0.1379	13.79	24.2209
0.0938	9.38	19.8161
0.072	7.2	17.2942
0.07	7	17.0463
0.0674	6.74	16.7191
0	0	0
0	0	0
0	0	0
0	0	0
0	0	0
0	0	0
0	0	0
0	0	0
0	0	0
0	0	0
0	0	0
0	0	0
0	0	0
0	0	0
0	0	0
0	0	0
0	0	0
0	0	0
0	0	0
0	0	0
0	0	0
0	0	0
0	0	0
0	0	0
0	0	0
0	0	0
0	0	0
0	0	0
0	0	0
RT = 1 mg/L	100	100

Perform all subsequent calculations on transformed data (x values, from table, above).

Mean = 3.191
Std Dev = 6.999
Std Err of Mean = 1.218

Calculate the upper limit of the 80% confidence interval (CI), in accordance with SW-846 guidance [pg NINE-6, and equation (6) in Table 9-1].

Upper limit of 80% CI = 4.787
tetrachlorethene RT, transformed = 100

Upper limit of 80% confidence interval is less than the RT for tetrachlororoethene. Therefore, tetrachloroethene is "not considered to be present in the waste at a hazardous level".

trichlorofluoromethane

Evaluate trichlorofluoromethane RLWTF influent sampling results.

33 sampling events, 5 detections of trichlorofluoromethane, 28 nondetections.

DETECTED CONC (mg/L)
0.0558
0.3813
0.0629
0.0594
0.0442
0.043
0
0
0
0
0
0
0
0
0
0
0
0
0
0
0
0
0
0
0
0
0
0
0
0
0
0
0

Mean = 0.01959 mg/L.
Std Dev = 0.06677
Variance = 0.00446
Std Err of Mean = 0.01162

The mean is less than the standard deviation. Therefore, the data is characterized by a negative binomial distribution, and must be normalized through use of the arcsin transformation (EPA SW-846, pg. NINE-10).

Use the arcsin transformation, as described in Statistics For Experimenters, (Box, Hunter, and Hunter. Wiley and Sons Publishers, 1978).

Convert detected concentrations to percentages of the regulatory threshold (RT), (for trichlorfluoromethane RT = 25 mg/L, per 40 CFR 261.3)

then calculate transformed values (x) from the equation:

sin x = sqrt (p) ; where p = det.conc/RT, and x is measured in grads.

DETECTED CONC (mg/L)	DET CONC PERCENT OF RT	x arcsin [sqrt (p)]
0.0558	0.2232	3.0088
0.3813	1.5252	7.8823
0.0629	0.2516	3.1946
0.0594	0.2376	3.1044
0.0442	0.1768	2.6776
0.043	0.172	2.641
0	0	0
0	0	0
0	0	0
0	0	0
0	0	0
0	0	0
0	0	0
0	0	0
0	0	0
0	0	0
0	0	0
0	0	0
0	0	0
0	0	0
0	0	0
0	0	0
0	0	0
0	0	0
0	0	0
0	0	0
0	0	0
0	0	0
0	0	0
0	0	0
0	0	0
0	0	0
0	0	0
RT = 25 mg/L	100	100

Perform all subsequent calculations on transformed data (x values, from table, above).

Mean = 0.682
Std Dev = 1.650
Std Err of Mean = 0.287

Calculate the upper limit of the 80% confidence interval (CI), in accordance with SW-846 guidance [pg NINE-6, and equation (6)·in Table 9-1].

Upper limit of 80% CI = 1.058
trichlorofluoromethane RT, transformed = 100

Upper limit of 80% confidence interval is less than the RT for trichlorfluoromethane. Therefore, trichlorofluoromethane is "not considered to be present in the waste at a hazardous level".

LANL EM-7
Statistical Analysis of RLWTP
Influent Per EPA SW-846

DE284

3 5
8/6/93
0

TO TRANSFORM DATA, FIRST CONVERT DETECTED CONCENTRATIONS TO PERCENTAGES OF REGULATORY THRESHOLD VALUE, THEN FIND ψ_i (TRANSFORMED VALUE) FROM

$$\sin(\psi_i) = \sqrt{\hat{p}_i} \quad \text{WHERE } \hat{p} = \frac{\text{DETECTED CONC}}{RT}$$

DETECTED CONC (mg/L)	$\hat{p}$	ψ_i
0.5564	0.0223	9.5425
1.7276	0.0691	16.9342
1.4143	0.0566	15.2923
1.4114	0.0565	15.2785
1.2156	0.0486	14.1508
1.2287	0.0491	14.2246
0.0255	0.0010	2.0135
0.0263	0.0011	2.1118
6.5000	0.2600	34.0637
0.0061	0.0002	0.9863
0.0610	0.0024	3.1200
0.0968	0.0039	3.9783
6.8000	0.2720	34.9282
0.0570	0.0024	3.1200
0.0720	0.0029	3.4300
0.0140	0.0006	1.5595
0.0094	0.0004	1.2733
0.0530	0.0021	2.9184
0.0140	0.0006	1.5595
0.2300	0.0092	6.1156
0.2600	0.0104	6.5036

$RT = 25$ $\quad \hat{p}_{RT}^{1} = 1.00$ $\quad \psi_{RT} = 100$

PERFORM ALL SUBSEQUENT CALCULATIONS ON TRANSFORMED DATA

DETERMINE 80% CONFIDENCE INTERVAL (CI) FOR METHYLENE CHLORIDE FROM THE EQUATION

$$CI = \bar{x} \pm (t_{0.20})(s_{\bar{x}})$$

($t_{0.20}$ VALUE FROM TABLE 2, EPA SW-846 PAGE NINE-4)

$$\bar{x} \text{ (FOR TRANSFORMED DATA)} = \sum_{i=1}^{i=21} x_i / n = \frac{181.4685}{33} = 5.50$$

$$s_{\bar{x}} = s / \sqrt{n}$$

$$s = \left\{ \left[\sum_{i=1}^{i=21} x_i^2 - \left(\sum_{i=1}^{i=21} \right)^2 / n \right] / (n-1) \right\}^{1/2}$$

$$s = 8.879$$

$$s_{\bar{x}} = 8.879 / \sqrt{33} = 1.546$$

$$t_{0.20} \text{ (from Table 2)} = 1.310$$

$$\therefore CI = 5.50 + 1.31(1.546) = 7.525$$

RT = 100 for METHYLENE CHLORIDE

'FINALLY, COMPARE UPPER LIMIT OF THE 80% CI TO THE REGULATORY THRESHOLD. PER EPA SW-846, PAGE NINE-13 "IF THE UPPER LIMIT OF THE CI IS LESS THAN THE APPLICABLE RT, THE CHEMICAL CONTAMINANT IS NOT CONSIDERED TO BE PRESENT IN THE WASTE AT A HAZARDOUS CONCENTRATION AND THE STUDY IS COMPLETED".

FOR METHYLENE CHLORIDE THE UPPER LIMIT OF THE CI = 11.498 vs REGULATORY THRESHOLD OF 100 THEREFORE. METHYLENE CHLORIDE IS NOT PRESENT AT A HAZARDOUS CONCENTRATION.

PER SW-846 (EPA, 1986) THE APPROPRIATE NUMBER OF SAMPLES TO COLLECT FROM A SOLID WASTE IS GIVEN BY:

$$n = (t_{0.20}^2)(s)^2 / \Delta^2$$

WHERE n = NUMBER OF SAMPLES
$t_{0.20}$ = STUDENT'S t-VALUE (TABLE 9-TWO, SW-846,
s = STANDARD DEVIATION
Δ = REGULATORY THRESHOLD (RT) − SAMPLE MEAN CONC ($\bar{x}$)

CALCULATE n FOR EACH OF THE 14 ORGANIC COMPOUNDS DETECTED IN THE RLWTP INFLUENT

(UTILIZE THE ARCSIN TRANSFORMATION DATA FOR EACH COMPOUND)

① FOR 1,1,1-TRICHLOROETHANE:

$\bar{x} = 3.487$
$RT = 100$
$t_{0.20} = 1.31$
$s = 6.770$

$$n = \frac{(1.31)^2(6.77)^2}{(100-3.487)^2}$$

$n = 0.0084 \Rightarrow$ ROUND UP TO NEAREST WHOLE NUMBER

SO $n = 1$

BASED ON HISTORICAL SAMPLING (1988-1992), ONE SAMPLE IS APPROPRIATE TO CHARACTERIZE THE RLWTP INFLUENT AS NONHAZARDOUS WITH RESPECT TO 1,1,1-TRICHLOROETHANE.

② FOR 1,1,2-TRICHLOROETHANE
$\bar{x} = 1.042$, $RT = 100$
$t_{0.20} = 1.31$, $s = 4.101$

$$n = \frac{(1.31)^2(4.101)^2}{(100-1.042)^2}$$

$n = 0.0029 \Rightarrow n = 1$

LANL EM-7 DE 284 2 4

APPROPRIATE NUMBER OF SAMPLES 4/10/9:

(SW 846) TO CHARACTERIZE RLWTF INFLUENT 0

③ for 2-butanone:

$\bar{x} = 1.138$
$RT = 100$
$t_{0.20} = 1.31$
$s = 2.141$

$$n = \frac{(1.31)^2(2.141)^2}{(100 - 1.138)^2}$$

$n = 0.0008$

so, $n = 1$

④ for benzene:

$\bar{x} = 0.758$
$RT = 100$
$t_{0.20} = 1.31$
$s = 1.821$

$$n = \frac{(1.31)^2(1.821)^2}{(100 - 0.758)^2}$$

$n = 0.0006$

so, $n = 1$

⑤ for chlorobenzene:

$\bar{x} = 0.067$
$RT = 100$
$t_{0.20} = 1.31$
$s = 0.185$

$$n = \frac{(1.31)^2(0.185)^2}{(100 - 0.067)^2}$$

$n = 6 \times 10^{-6}$

so, $n = 1$

⑥ for carbon disulfide

$\bar{x} = 5.327$
$RT = 100$
$t_{0.20} = 1.31$
$s = 11.177$

$$n = \frac{(1.31)^2(11.177)^2}{(100 - 5.327)^2}$$

$n = 0.0237$, so $n = 1$

LANL EM-7
APPROPRIATE NUMBER OF SAMPLES
(SW846) TO CHARACTERIZE RLWTF INFLUENT

DE 284

3 4
8/10/93
D

(7) for carbon tetrachloride:

$\bar{x} = 0.550$
$RT = 100$
$t_{0.20} = 1.31$
$s = 1.604$

$$n = \frac{(1.31)^2(1.604)^2}{(100-0.55)^2}$$

$n = 0.00045$

so, $n = 1$

(8) for trichloroethene:

$\bar{x} = 1.377$
$RT = 100$
$t_{0.20} = 1.31$
$s = 3.839$

$$n = \frac{(1.31)^2(3.839)^2}{(100-1.377)^2}$$

$n = 0.0026$

so, $n = 1$

(9) for methylene chloride

$\bar{x} = 5.846$
$RT = 100$
$t_{0.20} = 1.31$
$s = 8.962$

$$n = \frac{(1.31)^2(8.962)^2}{(100-5.846)^2}$$

$n = 0.0155$

so $n = 1$

(10) for o-dichlorobenzene

$\bar{x} = 0.009$
$RT = 100$
$t_{0.20} = 1.31$
$s = 0.049$

$$n = \frac{(1.31)^2(0.049)^2}{(100-0.009)^2}$$

$n = 4.12 \times 10^{-7}$

so, $n = 1$

CAUL EM-7
APPROPRIATE NUMBER OF SAMPLES
(SW-846) TO CHARACTERIZE RLWTF INFLUENT

DE 284

4 4
8/10/0

(11) for tetrachloroethene:

$\bar{x} = 3.191$
$RT = 100$
$t_{0.20} = 1.31$
$s = 6.999$

$$n = \frac{(1.31)^2 (6.999)^2}{(100 - 3.191)^2}$$

$n = 8.97 \times 10^{-3}$

so, $n = 1$

(12) for trichlorofluoromethane

$\bar{x} = 0.682$
$RT = 100$
$t_{0.20} = 1.31$
$s = 1.650$

$$n = \frac{(1.31)^2 (1.65)^2}{(100 - 0.682)^2}$$

$n = 4.79 \times 10^{-4}$

so, $n = 1$

(13) trichlorotrifluoroethane

$\bar{x} = 0.051$
$RT = 100$
$t_{0.20} = 1.31$
$s = 0.286$

$$n = \frac{(1.31)^2 (0.286)^2}{(100 - 0.051)^2}$$

$n = 1.4 \times 10^{-5}$

so $n = 1$

(14) for toluene:

$\bar{x} = 1.763$
$RT = 100$
$t_{0.20} = 1.31$
$s = 3.617$

$$n = \frac{(1.31)^2 (3.617)^2}{(100 - 1.763)^2}$$

$n = 2.3 \times 10^{-3}$

so $n = 1$

DETECTED CONC (mg/L)	DET CONC PERCENT OF RT	x arcsin [sqrt (p)]
0.0498	0.1992	2.8423
0.3824	1.5296	7.8937
0.1467	0.5868	4.8815
1	4	12.8188
0.7853	3.1412	11.343
0.8232	3.2928	11.6165
0.023	0.092	1.9313
0.0212	0.0848	1.8541
0.0259	0.1036	2.0494
0.0057	0.0228	0.9613
0	0	0
0	0	0
0	0	0
0	0	0
0	0	0
0	0	0
0	0	0
0	0	0
0	0	0
0	0	0
0	0	0
0	0	0
0	0	0
0	0	0
0	0	0
0	0	0
0	0	0
0	0	0
0	0	0
0	0	0
0	0	0
0	0	0
RT = 25 mg/L	100	100

Perform all subsequent calculations on transformed data (x values, from table, above).

Mean = 1.763
Std Dev = 3.617
Std Err of Mean = 0.630

Calculate the upper limit of the 80% confidence interval (CI), in accordance with SW-846 guidance [pg NINE-6, and equation (6) in Table 9-1].

Upper limit of 80% CI = 2.588
toluene RT, transformed = 100

Upper limit of 80% confidence interval is less than the RT for toluene. Therefore, toluene is "not considered to be present in the waste at a hazardous level".

1,1,1 – Trichloroethane
Detected in Influent

Sample Number	Date Sampled	Level Detected	Laboratory Uncertainty	Level of Quantitation
89.10027	12/14/88	25.5	7.65	2
89.10029	12/15/88	274.3	137.15	2
89.10030	12/15/88	53.8	16.14	2
89.10032	12/19/88	4223	2111.5	2
89.10033	12/22/88	2887.5	1443.75	2
89.10034	12/22/88	2885.9	1442.95	2
89.17434	10/31/89	130	39	10
89.17435	11/02/89	450	135	10
89.17627	11/07/89			10
89.17628	11/09/89			10
89.17736	11/14/89	41	12.3	10
89.17737	11/16/89	40.2	12.06	10
89.18112	12/04/89			2
89.18113	12/04/89			2
90.10158	01/11/90	12.4	3.7	5
90.10314	01/17/90			5
90.11174	02/25/90			5
90.15355	06/26/90			5
90.17442	09/13/90	90	27	5
90.19511	11/28/90			5
91.01152	02/08/91			5
91.01889	03/13/91	110.1	33	5
91.03432	04/25/91			5
91.05134	06/18/91			5
91.06507	07/16/91	9.1	2.73	5
91.10620	09/26/91	68	20.4	5
92.01353	02/03/92			5
92.02346	03/02/92			5
92.06097	05/01/92			5
92.06199	05/05/92			5
92.06446	05/06/92			5
92.06445	05/06/92			5
92.06447	05/06/92			5

Number of sampling events	33
Number of detected values	15
Mean of detected values	753.4
Standard deviation	1371.0
Minimum value detected	9.1
Maximum value detected	4223.0
3x standard deviation	4113.0
Maximum value detected + 3x STD	8336.0
Regulatory Limit	25000

1,1,2-Trichloroethane
Detected in Influent

Sample Number	Date Sampled	Level Detected	Laboratory Uncertainty	Level of Quantitation
89.10027	12/14/88			2
89.10029	12/15/88	71.2	21.36	2
89.10030	12/15/88	71.1	21.33	2
89.10032	12/19/88			2
89.10033	12/22/88			2
89.10034	12/22/88			2
89.17434	10/31/89			10
89.17435	11/02/89			10
89.17627	11/07/89			10
89.17628	11/09/89			10
89.17736	11/14/89			10
89.17737	11/16/89			10
89.18112	12/04/89			2
89.18113	12/04/89			2
90.10158	01/11/90			5
90.10314	01/17/90			5
90.11174	02/25/90			5
90.15355	06/26/90			5
90.17442	09/13/90			5
90.19511	11/28/90			5
91.01152	02/08/91			5
91.01889	03/13/91			5
91.03432	04/25/91			5
91.05134	06/18/91			5
91.06507	07/16/91			5
91.10620	09/26/91			5
92.01353	02/03/92			5
92.02346	03/02/92			5
92.06097	05/01/92			5
92.06199	05/05/92			5
92.06446	05/06/92			5
92.06445	05/06/92			5
92.06447	05/06/92			5

Number of sampling events	33
Number of detected values	2
Mean of detected values	71.15
Standard deviation	0.07
Minimum value detected	71.10
Maximum value detected	71.20
3x standard deviation	0.21
Maximum value detected + 3x STD	71.41
Regulatory Limit	1000

2-Butanone
Detected in Influent

Sample Number	Date Sampled	Level Detected	Laboratory Uncertainty	Level of Quantitation
89.10027	12/14/88			10
89.10029	12/15/88	20.8	6.24	10
89.10030	12/15/88	0.6	0.6	10
89.10032	12/19/88	154.8	46.44	10
89.10033	12/22/88	116.7	35.01	10
89.10034	12/22/88	136.1	40.83	10
89.17434	10/31/89			50
89.17435	11/02/89			50
89.17627	11/07/89			20
89.17628	11/09/89			20
89.17736	11/14/89			20
89.17737	11/16/89			20
89.18112	12/04/89			10
89.18113	12/04/89			10
90.10158	01/11/90			20
90.10314	01/17/90			20
90.11174	02/25/90	149	44.7	20
90.15355	06/26/90			20
90.17442	09/13/90	65	19.5	20
90.19511	11/28/90	370	111	20
91.01152	02/08/91			20
91.01889	03/13/91			20
91.03432	04/25/91			20
91.05134	06/18/91			20
91.06507	07/16/91	180	54	20
91.10620	09/26/91			20
92.01353	02/03/92			20
92.02346	03/02/92			20
92.06097	05/01/92			20
92.06199	05/05/92			20
92.06446	05/06/92			20
92.06445	05/06/92			20
92.06447	05/06/92			20

Number of sampling events	33
Number of detected values	9
Mean of detected values	132.6
Standard deviation	108.5
Minimum value detected	0.6
Maximum value detected	370.0
3x standard deviation	325.5
Maximum value detected + 3x STD	695.5
Regulatory Limit	25000

Benzene
Detected in Influent

Sample Number	Date Sampled	Level Detected	Laboratory Uncertainty	Level of Quantitation
89.10027	12/14/88			2
89.10029	12/15/88	6.6	1.98	2
89.10030	12/15/88	3.1	0.93	2
89.10032	12/19/88	9.1	2.73	2
89.10033	12/22/88	6.5	1.95	2
89.10034	12/22/88	6.3	1.89	2
89.17434	10/31/89			10
89.17435	11/02/89			10
89.17627	11/07/89			10
89.17628	11/09/89			10
89.17736	11/14/89			10
89.17737	11/16/89			10
89.18112	12/04/89			2
89.18113	12/04/89			2
90.10158	01/11/90			5
90.10314	01/17/90			5
90.11174	02/25/90			5
90.15355	06/26/90			5
90.17442	09/13/90			5
90.19511	11/28/90			5
91.01152	02/08/91			5
91.01889	03/13/91			5
91.03432	04/25/91			5
91.05134	06/18/91			5
91.06507	07/16/91			5
91.10620	09/26/91			5
92.01353	02/03/92			5
92.02346	03/02/92			5
92.06097	05/01/92			5
92.06199	05/05/92			5
92.06446	05/06/92			5
92.06445	05/06/92			5
92.06447	05/06/92			5

Number of sampling events	33
Number of detected values	5
Mean of detected values	6.3
Standard deviation	2.1
Minimum value detected	3.1
Maximum value detected	9.1
3x standard deviation	6.4
Maximum value detected + 3x STD	15.5
Regulatory Limit	1000

Chlorobenzene
Detected in Influent

Sample Number	Date Sampled	Level Detected	Laboratory Uncertainty	Level of Quantitation
89.10027	12/14/88			2
89.10029	12/15/88	3.1	2.0	2
89.10030	12/15/88			2
89.10032	12/19/88	2.6	0.78	2
89.10033	12/22/88	1.2 *	1.2	2
89.10034	12/22/88	1.0 *	1.0	2
89.17434	10/31/89			10
89.17435	11/02/89			10
89.17627	11/07/89			10
89.17628	11/09/89			10
89.17736	11/14/89			10
89.17737	11/16/89			10
89.18112	12/04/89			2
89.18113	12/04/89			2
90.10158	01/11/90			5
90.10314	01/17/90			5
90.11174	02/25/90			5
90.15355	06/26/90			5
90.17442	09/13/90			5
90.19511	11/28/90			5
91.01152	02/08/91			5
91.01889	03/13/91			5
91.03432	04/25/91			5
91.05134	06/18/91			5
91.06507	07/16/91			5
91.10620	09/26/91			5
92.01353	02/03/92			5
92.02346	03/02/92			5
92.06097	05/01/92			5
92.06199	05/05/92			5
92.06446	05/06/92			5
92.06445	05/06/92			5
92.06447	05/06/92			5

* Level detected is below the level of quantitation and is therefore an estimated value.

Number of sampling events	33
Number of detected values	4
Mean of detected values	2.0
Standard deviation	1.0
Minimum value detected	1.0
Maximum value detected	3.1
3x standard deviation	3.1
Maximum value detected + 3x STD	6.2
Regulatory Limit	25000

Carbon
Disulfide
Detected in Influent

Sample Number	Date Sampled	Level Detected	Laboratory Uncertainty	Level of Quantitation
89.10027	12/14/88	1258.3	629.15	10
89.10029	12/15/88	4287.2	2143.6	10
89.10030	12/15/88	3345.3	1672.65	10
89.10032	12/19/88	7374.6	2212.38	10
89.10033	12/22/88	5982.9	2991.45	10
89.10034	12/22/88	6293.5	3146.75	10
89.17434	10/31/89			50
89.17435	11/02/89			50
89.17627	11/07/89			10
89.17628	11/09/89			10
89.17736	11/14/89			10
89.17737	11/16/89			10
89.18112	12/04/89			10
89.18113	12/04/89			10
90.10158	01/11/90	11	3.3	5
90.10314	01/17/90	160	48	5
90.11174	02/25/90	11.6	3.5	5
90.15355	06/26/90			5
90.17442	09/13/90			5
90.19511	11/28/90			5
91.01152	02/08/91			5
91.01889	03/13/91			5
91.03432	04/25/91			5
91.05134	06/18/91			5
91.06507	07/16/91			5
91.10620	09/26/91			5
92.01353	02/03/92			5
92.02346	03/02/92			5
92.06097	05/01/92			5
92.06199	05/05/92			5
92.06446	05/06/92			5
92.06445	05/06/92			5
92.06447	05/06/92			5

Number of sampling events	33
Number of detected values	9
Mean of detected values	3191.6
Standard deviation	2943.0
Minimum value detected	11.0
Maximum value detected	7374.6
3x standard deviation	8829.0
Maximum value detected + 3x STD	16203.6
Regulatory Limit	25000

Carbon
Tetrachloride
Detected in Influent

Sample Number	Date Sampled	Level Detected	Laboratory Uncertainty	Level of Quantitation
89.10027	12/14/88			2
89.10029	12/15/88	0.9	0.9	2
89.10030	12/15/88			2
89.10032	12/19/88	3.7	1.11	2
89.10033	12/22/88	1.5	1.5	2
89.10034	12/22/88	0.7	0.7	2
89.17434	10/31/89			10
89.17435	11/02/89			10
89.17627	11/07/89			10
89.17628	11/09/89			10
89.17736	11/14/89			10
89.17737	11/16/89			10
89.18112	12/04/89			2
89.18113	12/04/89			2
90.10158	01/11/90			5
90.10314	01/17/90			5
90.11174	02/25/90			5
90.15355	06/26/90			5
90.17442	09/13/90			5
90.19511	11/28/90			5
91.01152	02/08/91			5
91.01889	03/13/91	16.5	5.1	5
91.03432	04/25/91			5
91.05134	06/18/91			5
91.06507	07/16/91			5
91.10620	09/26/91			5
92.01353	02/03/92			5
92.02346	03/02/92			5
92.06097	05/01/92			5
92.06199	05/05/92			5
92.06446	05/06/92			5
92.06445	05/06/92			5
92.06447	05/06/92			5

Number of sampling events	33
Number of detected values	5
Mean of detected values	4.7
Standard deviation	6.7
Minimum value detected	0.7
Maximum value detected	16.5
3x standard deviation	20.2
Maximum value detected + 3x STD	36.7
Regulatory Limit	1000

Trichloroethene
Detected in Influent

Sample Number	Date Sampled	Level Detected	Laboratory Uncertainty	Level of Quantitation
89.10027	12/14/88			2
89.10029	12/15/88	5.1	1.53	2
89.10030	12/15/88	0.4	0.4	2
89.10032	12/19/88	52	15.6	2
89.10033	12/22/88	36.8	11.04	2
89.10034	12/22/88	39.2	11.76	2
89.17434	10/31/89			10
89.17435	11/02/89			10
89.17627	11/07/89			10
89.17628	11/09/89			10
89.17736	11/14/89			10
89.17737	11/16/89			10
89.18112	12/04/89			2
89.18113	12/04/89			2
90.10158	01/11/90			5
90.10314	01/17/90			5
90.11174	02/25/90			5
90.15355	06/26/90			5
90.17442	09/13/90			5
90.19511	11/28/90			5
91.01152	02/08/91			5
91.01889	03/13/91			5
91.03432	04/25/91			5
91.05134	06/18/91			5
91.06507	07/16/91			5
91.10620	09/26/91			5
92.01353	02/03/92			5
92.02346	03/02/92			5
92.06097	05/01/92			5
92.06199	05/05/92			5
92.06446	05/06/92			5
92.06445	05/06/92			5
92.06447	05/06/92			5

Number of sampling events	33
Number of detected values	5
Mean of detected values	26.7
Standard deviation	22.7
Minimum value detected	0.4
Maximum value detected	52.0
3x standard deviation	68.1
Maximum value detected + 3x STD	120.1
Regulatory Limit	1000

Methylene
Chloride
Detected in Influent

Sample Number	Date Sampled	Level Detected	Laboratory Uncertainty	Level of Quantitation
89.10027	12/14/88	556.4	278.2	2
89.10029	12/15/88	1727.6	863.8	2
89.10030	12/15/88	1414.3	707.15	2
89.10032	12/19/88	1411.4	705.7	2
89.10033	12/22/88	1215.6	607.8	2
89.10034	12/22/88	1228.7	614.35	2
89.17434	10/31/89			10
89.17435	11/02/89			10
89.17627	11/07/89			10
89.17628	11/09/89			10
89.17736	11/14/89			10
89.17737	11/16/89			10
89.18112	12/04/89			2
89.18113	12/04/89			2
90.10158	01/11/90	25.5	7.7	5
90.10314	01/17/90	26.3	7.9	5
90.11174	02/25/90	6500	1950	5
90.15355	06/26/90			5
90.17442	09/13/90	6.1	1.83	5
90.19511	11/28/90	61	18.3	5
91.01152	02/08/91			5
91.01889	03/13/91	96.8	29.1	5
91.03432	04/25/91			5
91.05134	06/18/91	6800	2040	5
91.06507	07/16/91	59	17.7	5
91.10620	09/26/91	72	21.6	5
92.01353	02/03/92	14	4.2	5
92.02346	03/02/92	9.4	2.82	5
92.06097	05/01/92	53	15.9	5
92.06199	05/05/92			5
92.06446	05/06/92	14	4.2	5
92.06445	05/06/92	230	69	5
92.06447	05/06/92	260	78	5

Number of sampling events	33
Number of detected values	21
Mean of detected values	1037.2
Standard deviation	1953.0
Minimum value detected	6.1
Maximum value detected	6800.0
3x standard deviation	5859.0
Maximum value detected + 3x STD	12659.0
Regulatory Limit	25000

o – Dichlorobenzene
Detected in Influent

Sample Number	Date Sampled	Level Detected	Laboratory Uncertainty	Level of Quantitation
89.10027	12/14/88			2
89.10029	12/15/88	0.5 *	0.5	2
89.10030	12/15/88			2
89.10032	12/19/88			2
89.10033	12/22/88			2
89.10034	12/22/88			2
89.17434	10/31/89			10
89.17435	11/02/89			10
89.17627	11/07/89			10
89.17628	11/09/89			10
89.17736	11/14/89			10
89.17737	11/16/89			10
89.18112	12/04/89			2
89.18113	12/04/89			2
90.10158	01/11/90			5
90.10314	01/17/90			5
90.11174	02/25/90			5
90.15355	06/26/90			5
90.17442	09/13/90			5
90.19511	11/28/90			5
91.01152	02/08/91			5
91.01889	03/13/91			5
91.03432	04/25/91			5
91.05134	06/18/91			5
91.06507	07/16/91			5
91.10620	09/26/91			5
92.01353	02/03/92			5
92.02346	03/02/92			5
92.06097	05/01/92			5
92.06199	05/05/92			5
92.06446	05/06/92			5
92.06445	05/06/92			5
92.06447	05/06/92			5

* Level detected is below the level of quantitation and is therefore an estimated value.

Number of sampling events	33
Number of detected values	1
Mean of detected values	0.5
Standard deviation	0.0
Minimum value detected	0.5
Maximum value detected	0.5
3x standard deviation	0.0
Maximum value detected + 3x STD	0.5
Regulatory Limit	25000

Tetrachloroethene
Detected in Influent

Sample Number	Date Sampled	Level Detected	Laboratory Uncertainty	Level of Quantitation
89.10027	12/14/88	25.5	7.65	2
89.10029	12/15/88	137.9	41.37	2
89.10030	12/15/88	93.8	28.14	2
89.10032	12/19/88	72	21.6	2
89.10033	12/22/88	70	21	2
89.10034	12/22/88	67.4	20.22	2
89.17434	10/31/89			10
89.17435	11/02/89			10
89.17627	11/07/89			10
89.17628	11/09/89			10
89.17736	11/14/89			10
89.17737	11/16/89			10
89.18112	12/04/89			2
89.18113	12/04/89			2
90.10158	01/11/90			5
90.10314	01/17/90			5
90.11174	02/25/90			5
90.15355	06/26/90			5
90.17442	09/13/90			5
90.19511	11/28/90			5
91.01152	02/08/91			5
91.01889	03/13/91			5
91.03432	04/25/91			5
91.05134	06/18/91			5
91.06507	07/16/91			5
91.10620	09/26/91			5
92.01353	02/03/92			5
92.02346	03/02/92			5
92.06097	05/01/92			5
92.06199	05/05/92			5
92.06446	05/06/92			5
92.06445	05/06/92			5
92.06447	05/06/92			5

Number of sampling events	33
Number of detected values	6
Mean of detected values	77.8
Standard deviation	36.9
Minimum value detected	25.5
Maximum value detected	137.9
3x standard deviation	110.7
Maximum value detected + 3x STD	248.6
Regulatory Limit	1000

TABLE 9-7. EXAMPLES OF SAMPLING EQUIPMENT FOR PARTICULAR WASTE TYPES

	Waste location or container								
Waste type	Drum	Sacks and bags	Open-bed truck	Closed-bed truck	Storage tanks or bins	Waste piles	Ponds, lagoons, & pits	Conveyor belt	Pipe
Free-flowing liquids and slurries	Coliwasa	N/A	N/A	Coliwasa	Weighted bottle	N/A	Dipper	N/A	Dipper
Sludges	Trier	N/A	Trier	Trier	Trier	a	a		
Moist powders or granules	Trier	Trier	Trier	Trier	Trier	Trier	Trier	Shovel	Dipper
Dry powders or granules	Thief	Thief	Thief	Thief	a	Thief	Thief	Shovel	Dipper
Sand or packed powders and granules	Auger	Auger	Auger	Auger	Thief	Thief	a	Dipper	Dipper
Large-grained solids	Large Trier	Large Trier	Large Trier	Large Trier	Large Trier	Large Trier	Large Trier	Trier	Dipper

[a]This type of sampling situation can present significant logistical sampling problems, and sampling equipment must be specifically selected or designed based on site and waste conditions. No general statement about appropriate sampling equipment can be made.

Glass containers are relatively inert to most chemicals and can be used to collect and store almost all hazardous waste samples, exept those that contain strong alkali and hydrofluoric acid. Glass soda bottles are suggested due to their low cost and ready availability. Borosilicate glass containers, such as Pyrex and Corex, are more inert and more resistant to breakage than soda glass, but are expensive and not always readily available. Glass containers are generally more fragile and much heavier than plastic containers. Glass or FEP containers must be used for waste samples that will be analyzed for organic compounds.

The containers must have tight, screw-type lids. Plastic bottles are usually provided with screw caps made of the same material as the bottles. Buttress threads are recommended. Cap liners are not usually required for plastic containers. Teflon cap liners should be used with glass containers supplied with rigid plastic screw caps. (These caps are usually provided with waxed paper liners.) Teflon liners may be purchased from plastic specialty supply houses (e.g., Scientific Specialties Service, Inc., P.O. Box 352, Randallstown, Maryland 21133). Other liners that may be suitable are polyethylene, polypropylene, and neoprene plastics.

If the samples are to be submitted for analysis of volatile compounds, the samples must be sealed in air-tight containers.

Prior to sampling, a detailed equipment list should be compiled. This equipment list should be comprehensive and leave nothing to memory. The categories of materials that should be considered are:

1. Personnel equipment, which will include boots, rain gear, disposable coveralls, face masks and cartridges, gloves, etc.

2. Safety equipment, such as portable eyewash stations and a first-aid kit.

3. Field test equipment, such as pH meters and Draeger tube samplers.

4. An ample supply of containers to address the fact that once in the field, the sampling team may want to collect 50% more samples than originally planned or to collect a liquid sample, although the sampling plan had specified solids only.

5. Additional sampling equipment for use if a problem arises, e.g., a tool kit.

6. Shipping and office supplies, such as tape, labels, shipping forms, chain-of-custody forms and seals, field notebooks, random-number tables, scissors, pens, etc.

Composite Liquid Waste Sampler (Coliwasa)

The Coliwasa is a device employed to sample free-flowing liquids and slurries contained in drums, shallow tanks, pits, and similar containers. It is especially useful for sampling wastes that consist of several immiscible liquid phases.

The Coliwasa consists of a glass, plastic, or metal tube equipped with an end closure that can be opened and closed while the tube is submerged in the material to be sampled (refer to Figure 9-9).

Weighted Bottle

This sampler consists of a glass or plastic bottle, sinker, stopper, and a line that is used to lower, raise, and open the bottle. The weighted bottle samples liquids and free-flowing slurries. A weighted bottle with line is built to the specifications in ASTM Methods D270 and E300. Figure 9-10 shows the configuration of a weighted-bottle sampler.

Dipper

The dipper consists of a glass or plastic beaker clamped to the end of a two- or three-piece telescoping aluminum or fiberglass pole that serves as the handle. A dipper samples liquids and free-flowing slurries. Dippers are not available commercially and must be fabricated (Figure 9-11).

Thief

A thief consists of two slotted concentric tubes, usually made of stainless steel or brass. The outer tube has a conical pointed tip that permits the sampler to penetrate the material being sampled. The inner tube is rotated to open and close the sampler. A thief is used to sample dry granules or powdered wastes whose particle diameter is less than one-third the width of the slots. A thief (Figure 9-12) is available at laboratory supply stores.

Trier

A trier consists of a tube cut in half lengthwise with a sharpened tip that allows the sampler to cut into sticky solids and to loosen soil. A trier samples moist or sticky solids with a particle diameter less than one-half the diameter of the trier. Triers 61 to 100 cm long and 1.27 to 2.54 cm in diameter are available at laboratory supply stores. A large trier can be fabricated (see Figure 9-13).

Auger

An auger consists of sharpened spiral blades attached to a hard metal central shaft. An auger samples hard or packed solid wastes or soil. Augers are available at hardware and laboratory supply stores.

Scoops and Shovels

Scoops and shovels are used to sample granular or powdered material in bins, shallow containers, and conveyor belts. Scoops are available at laboratory supply houses. Flat-nosed shovels are available at hardware stores.

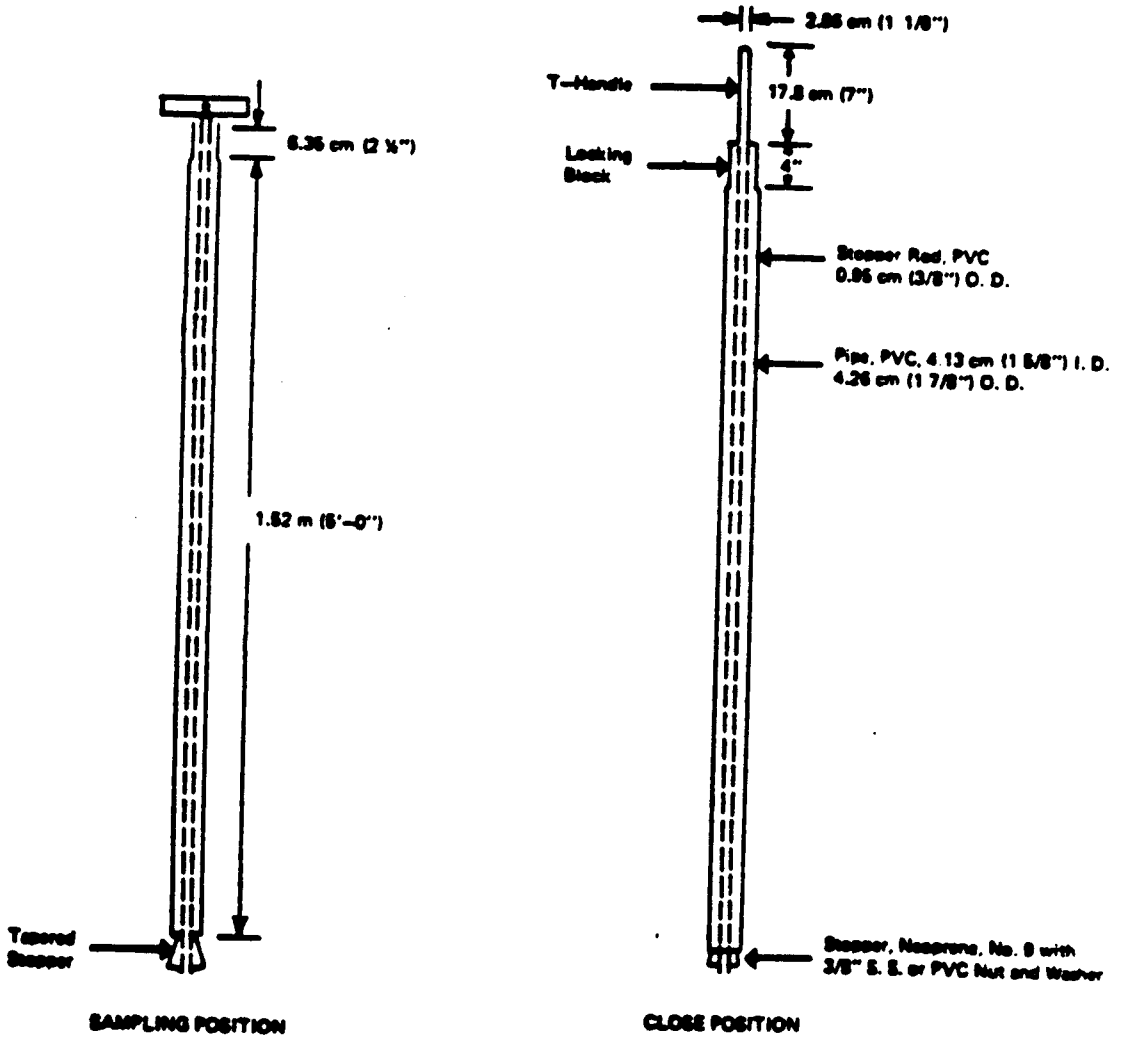

Figure 9-9. Composite liquid waste sampler (Coliwasa).

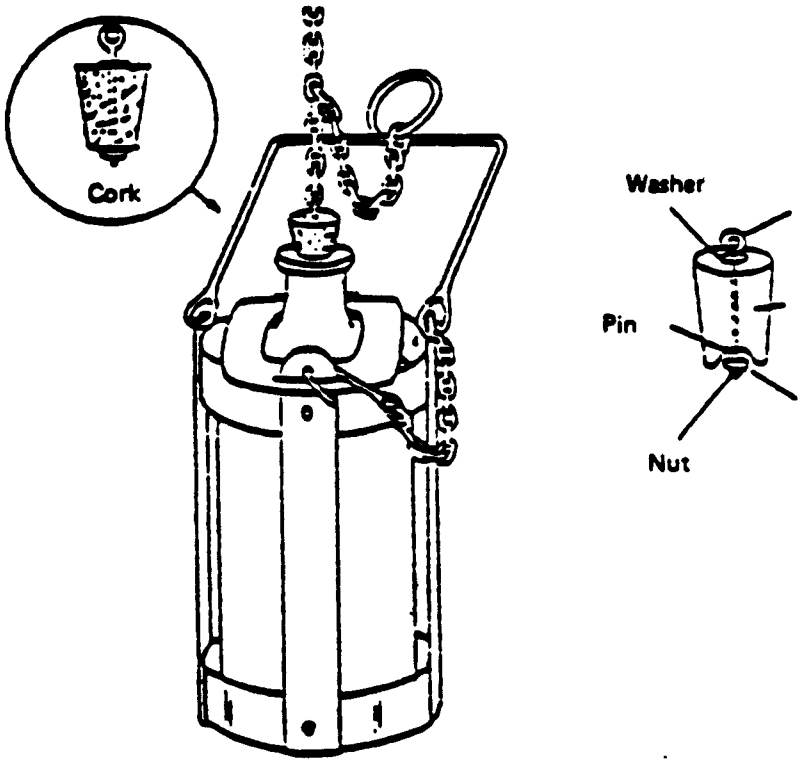

Figure 9-10. Weighted bottle sampler.

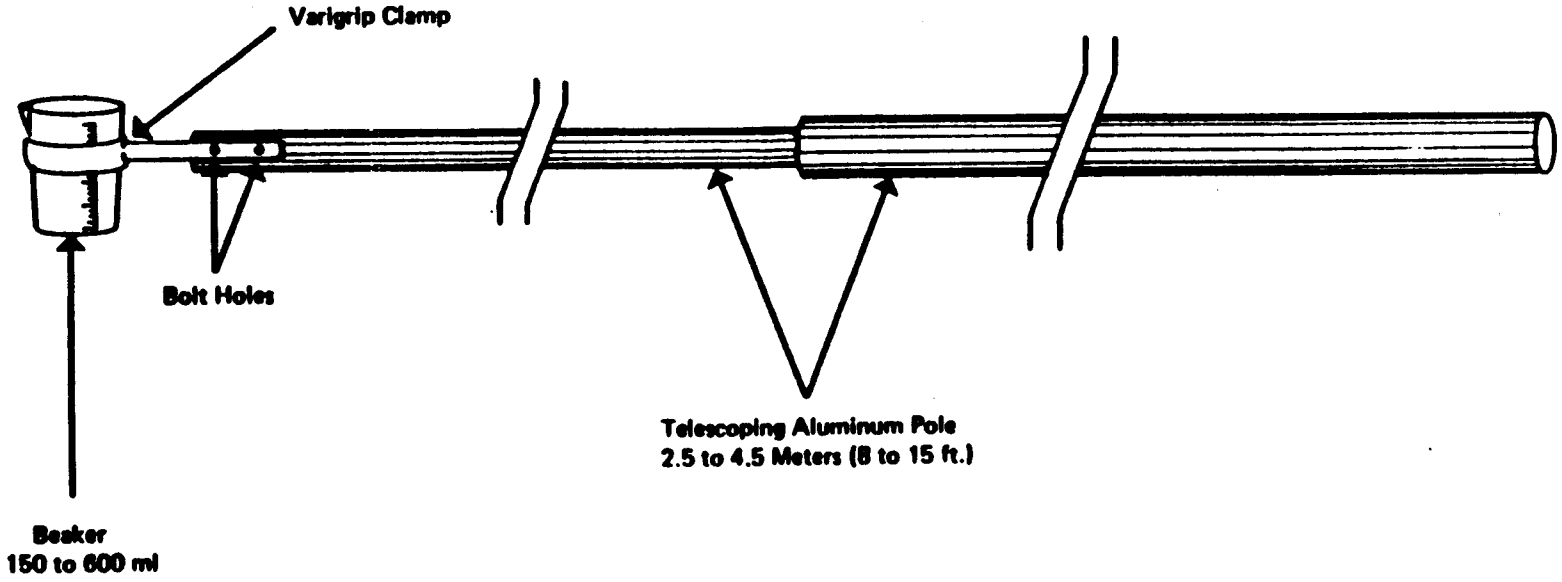

Figure 9-11. Dipper.

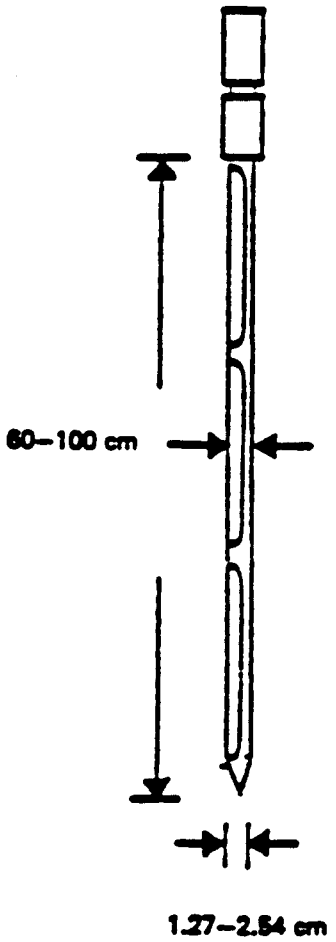

Figure 9-12. Thief sampler.

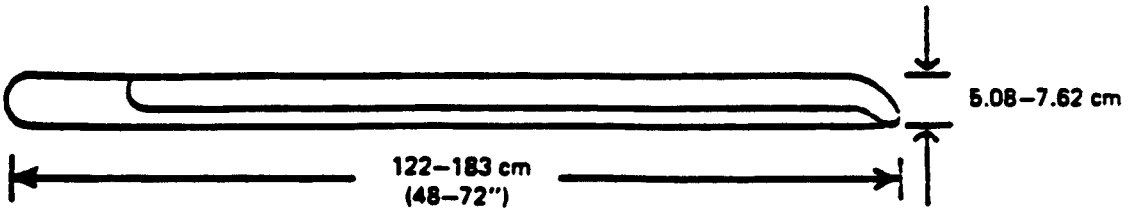

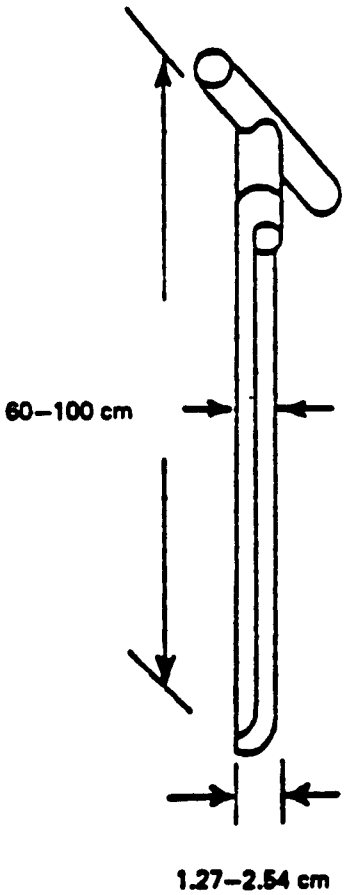

Figure 9-13. Sampling triers.

Bailer

The bailer is employed for sampling well water. It consists of a container attached to a cable that is lowered into the well to retrieve a sample. Bailers can be of various designs. The simplest is a weighted bottle or basally capped length of pipe that fills from the top as it is lowered into the well. Some bailers have a check valve, located at the base, which allows water to enter from the bottom as it is lowered into the well. When the bailer is lifted, the check valve closes, allowing water in the bailer to be brought to the surface. More sophisticated bailers are available that remain open at both ends while being lowered, but can be sealed at both top and bottom by activating a triggering mechanism from the surface. This allows more reliable sampling at discrete depths within a well. Perhaps the best-known bailer of this latter design is the Kemmerer sampler.

Bailers generally provide an excellent means for collecting samples from monitoring wells. They can be constructed from a wide variety of materials compatible with the parameter of interest. Because they are relatively inexpensive, bailers can be easily dedicated to an individual well to minimize cross contamination during sampling. If not dedicated to a well, they can be easily cleaned to prevent cross contamination. Unfortunately, bailers are frequently not suited for well evacuation because of their small volume.

Suction Pumps

As the name implies, suction pumps operate by creating a partial vacuum in a sampling tube. This vacuum allows the pressure exerted by the atmosphere on the water in the well to force water up the tube to the surface. Accordingly, these pumps are located at the surface and require only that a transmission tube be lowered into the well. Unfortunately, their use is limited by their reliance on suction to depths of 20 to 25 ft, depending on the pump. In addition, their use may result in out-gassing of dissolved gases or volatile organics and is therefore limited in many sampling applications. In spite of this, suction methods may provide a suitable means for well evacuation because the water remaining in the well is left reasonably undisturbed.

A variety of pumps that operate on this principle are available, but the ones most commonly suggested for monitoring purposes are the centrifugal and peristaltic pumps. In the centrifugal pump, the fluid is displaced by the action of an impeller rotating inside the pump chamber. This discharges water by centrifugal force. The resulting pressure drop in the chamber creates a suction and causes water to enter the intake pipe in the well. These pumps can provide substantial yields and are readily available and inexpensive. The disadvantages are that they require an external power source and may be difficult to clean between sampling events. In addition, the materials with which these pumps are constructed may frequently be incompatible with certain sample constituents. However, their substantial pumping rates make them suitable for well evacuation.

Trench Lysimeters

Trench lysimeters are named for the large access trench, or caisson, necessary for operation. Basic installation, as described by Parizek and Lane (1970), involves excavating a rather large trench and shoring up the side walls, taking care to leave open areas so that samplers can be placed in the side walls. Sample trays are imbedded in the side walls and connected by tubing to sample collection containers. The entire trench area is then covered to prevent flooding. One significant danger in using this system is the potential for accumulation of hazardous fumes in the trench, possibly endangering the health and safety of the person collecting the samples.

Trench lysimeters function by intercepting downward-moving water and diverting it into a collection device located at a lower elevation. The intercepting agent may be an open-ended pipe, sheet metal trough, pan, or other similar device. Pans 0.9 to 1.2 m in diameter have been successfully used in the field by Tyler and Thomas (1977). Because there is no vacuum applied to the system, only free water in excess of saturation is sampled. Consequently, samples are plentiful during rainy seasons but are nonexistent during the dry season.

Another variation of this system is to use a funnel filled with clean sand inserted into the sidewall of the trench. Free water will drain into a collection chamber, from which a sample is periodically removed by vacuum. A small sample collection device such as this may be preferable to the large trench because the necessary hole is smaller, so that installation is easier (Figure 9-15).

9.2.2.5 Quality Assurance and Quality Control

Quality assurance (QA) can briefly be defined as the process for ensuring that all data and the decisions based on these data are technically sound, statistically valid, and properly documented. Quality control (QC) procedures are the tools employed to measure the degree to which these quality assurance objectives are met.

A data base cannot be properly evaluated for accuracy and precision unless it is accompanied by quality assurance data. In the case of waste evaluation, these quality assurance data result from the implementation of quality control procedures during sampling and analysis. Quality control requirements for specific analytical methods are given in detail in each method in this manual; in this subsection, quality assurance and quality control procedures for sampling will be discussed.

Quality control procedures that are employed to document the accuracy and precision of sampling are:

1. Trip Blanks: Trip blanks should accompany sample containers to and from the field. These samples can be used to detect any contamination or cross-contamination during handling and transportation.

2. Field Blanks: Field blanks should be collected at specified frequencies, which will vary according to the probability of

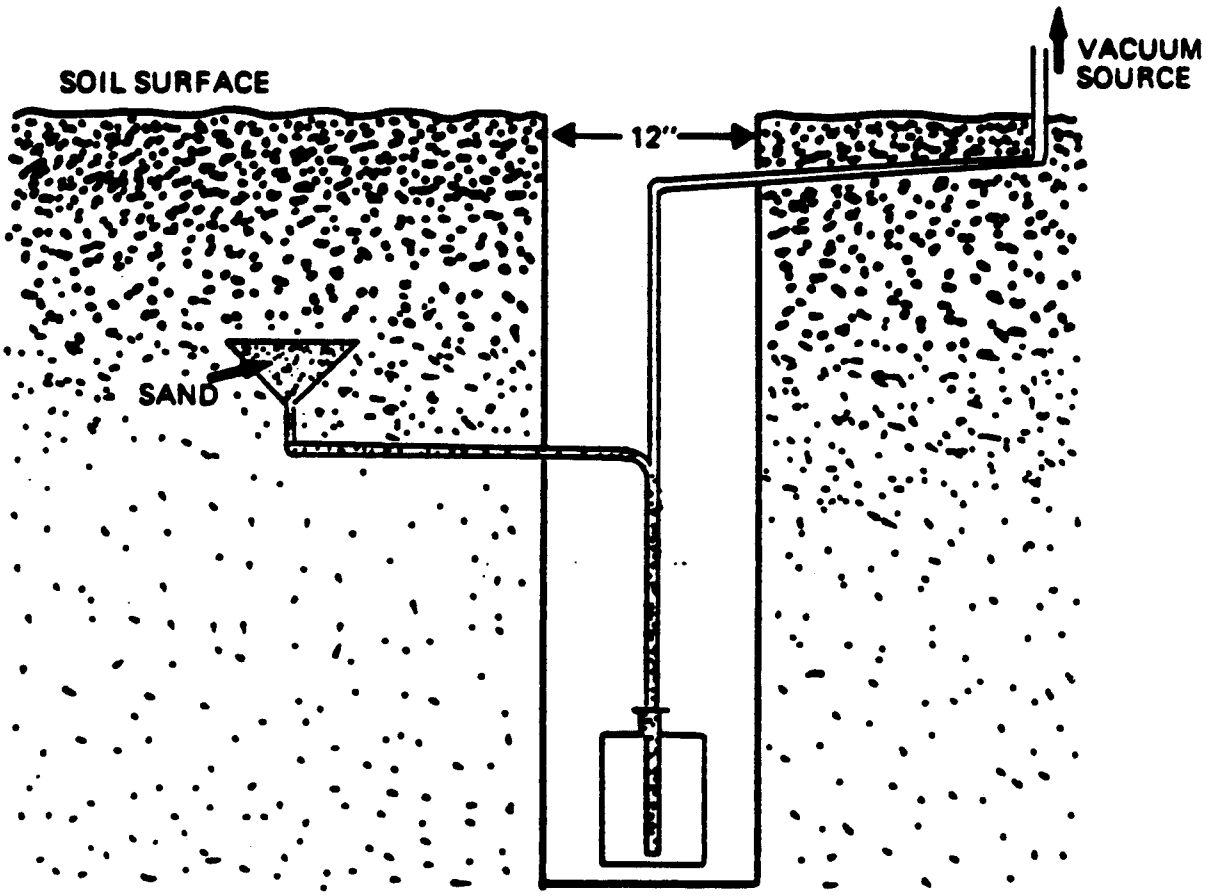

Figure 9-15. Schematic diagram of a sand filled funnel used to collect leachate from the unsaturated zone.

contamination or cross-contamination. Field blanks are often metal- and/or organic-free water aliquots that contact sampling equipment under field conditions and are analyzed to detect any contamination from sampling equipment, cross contamination from previously collected samples, or contamination from conditions during sampling (e.g., airborne contaminants that are not from the waste being sampled).

3. Field Duplicates: Field duplicates are collected at specified frequencies and are employed to document precision. The precision resulting from field duplicates is a function of the variance of waste composition, the variance of the sampling technique, and the variance of the analytical technique.

4. Field Spikes: Field spikes are infrequently used to determine the loss of parameters of interest during sampling and shipment to the laboratories. Because spiking is done in the field, the making of spiked samples or spiked blanks is susceptible to error. In addition, compounds can be lost during spiking, and equipment can be contaminated with spiking solutions. To eliminate these and other problems, some analysts spike blanks or matrices similar to the waste in the laboratory and ship them, along with sample containers, to the field. This approach also has its limitation because the matrix and the handling of the spike are different from those of the actual sample. In all cases, the meaning of a low field-spike recovery is difficult to interpret, and thus, field spikes are not commonly used.

In addition to the above quality control samples, a complete quality assurance program will ensure that standard operating procedures (SOPs) exist for all essential aspects of a sampling effort. SOPs should exist for the following steps in a sampling effort:

1. Definition of objectives (refer to Section 9.2.1).

2. Design of sampling plans (refer to Section 9.2.2).

3. Preparation of containers and equipment (refer to the specific analytical methods).

4. Maintenance, calibration, and cleaning of field equipment (refer to instrument manuals or consult a chemist for cleaning protocols).

5. Sample preservation, packaging, and shipping (refer to the analytical methods and to Section 9.2.2.7).

6. Health and safety protocols (refer to Section 9.2.2.6).

7. Chain-of-custody protocols (refer to Section 9.2.2.7).

In addition to the above protocols, numerous other QA/QC protocols must be employed to document the accuracy of the analytical portion of a waste evaluation program.

9.2.2.6 Health and Safety

Safety and health must also be considered when implementing a sampling plan. A comprehensive health and safety plan has three basic elements: (1) monitoring the health of field personnel; (2) routine safety procedures; and (3) emergency procedures.

Employees who perform field work, as well as those exposed to chemicals in the laboratory, should have a medical examination at the initiation of employment and routinely thereafter. This exam should preferably be performed and evaluated by medical doctors who specialize in industrial medicine. Some examples of parts of a medical examination that ought to be performed are: documentation of medical history; a standard physical exam; pulmonary functions screening; chest X-ray; EKG; urinalysis; and blood chemistry. These procedures are useful to: (1) document the quality of an employee's health at the time of matriculation; (2) ensure the maintenance of good health; and (3) detect early signs of bodily reactions to chemical exposures so they can be treated in a timely fashion. Unscheduled examinations should be performed in the event of an accident, illness, or exposure or suspected exposure to toxic materials.

Regarding safety procedures, personnel should be aware of the common routes of exposure to chemicals (i.e., inhalation, contact, and ingestion) and be instructed in the proper use of safety equipment, such as Draeger tube air samplers to detect air contamination, and in the proper use of protective clothing and respiratory equipment. Protocols should also be defined stating when safety equipment should be employed and designating safe areas where facilities are available for washing, drinking, and eating.

Even when the utmost care is taken, an emergency situation can occur as a result of an unanticipated explosion, electrical hazard, fall, or exposure to a hazardous substance. To minimize the impact of an emergency, field personnel should be aware of basic first aid and have immediate access to a first-aid kit. Phone numbers for both police and the nearest hospital should be obtained and kept by each team member before entering the site. Directions to the nearest hospital should also be obtained so that anyone suffering an injury can be transported quickly for treatment.

9.2.2.7 Chain of Custody

An essential part of any sampling/analytical scheme is ensuring the integrity of the sample from collection to data reporting. The possession and handling of samples should be traceable from the time of collection through analysis and final disposition. This documentation of the history of the sample is referred to as chain of custody.

Chain of custody is necessary if there is <u>any</u> possibility that the analytical data or conclusions based upon analytical data will be used in litigation. In cases where litigation is not involved, many of the chain-of-custody procedures are still useful for routine control of sample flow. The components of chain of custody -- sample seals, a field logbook, chain-of-custody record, and sample analysis request sheet -- and the procedures for their use are described in this section.

A sample is considered is considered to be under a person's custody if it is (1) in a person's physical possession, (2) in view of the person after taking possession, and (3) secured by that person so that no one can tamper with it, or secured by that person in an area that is restricted to authorized personnel. A person who has samples in custody must comply with the following procedures.

(The material presented here briefly summarizes the major aspects of chain of custody. The reader is referred to NEIC Policies and Procedures, EPA-330/9/78/001-R [as revised 1/82], or other manual, as appropriate, for more information.)

Sample labels (Figure 9-16) are necessary to prevent misidentification of samples. Gummed paper labels or tags are adequate and should include at least the following information:

Sample number.
Name of collector.
Date and time of collection.
Place of collection.

Labels should be affixed to sample containers prior to or at the time of sampling and should be filled out at the time of collection.

Sample seals are used to detect unauthorized tampering of samples following sample collection up to the time of analysis. Gummed paper seals may be used for this purpose. The paper seal should include, minimally, the following information:

Sample number. (This number must be identical with the number on the sample label.)
Name of collector.
Date and time of sampling.
Place of collection.

The seal must be attached in such a way that it is necessary to break it in order to open the sample container. (An example of an official sample seal is shown in Figure 9-17.) Seals must be affixed to containers before the samples leave the custody of sampling personnel.

All information pertinent to a field survey or sampling must be recorded in a logbook. This should be bound, preferably with consecutively numbered pages that are 21.6 by 27.9 cm (8-1/2 by 11 in.). At a minimum, entries in the logbook must include the following:

Location of sampling point.
Name and address of field contact.
Producer of waste and address, if different from location.
Type of process producing waste (if known).
Type of waste (e.g., sludge, wastewater).
Suspected waste composition, including concentrations.
Number and volume of sample taken.

Collector _____ Sample No. _____

Place of Collection _____

_____

Date Sampled _____ Time Sampled _____

Field Information _____

_____

_____

Figure 9-16. Example of Sample Label

NAME AND ADDRESS OF ORGANIZATION COLLECTING SAMPLES

Person Collecting Sample _____ Sample No. _____
(signature)

Date Collected _____ Time Collected _____

Place Collected _____

_____

_____

Figure 9-17. Example of Official Sample Seal

Purpose of sampling (e.g., surveillance, contract number).
Description of sampling point and sampling methodology.
Date and time of collection.
Collector's sample identification number(s).
Sample distribution and how transported (e.g., name of laboratory, UPS, Federal Express).
References, such as maps or photographs of the sampling site.
Field observations.
Any field measurements made (e.g., pH, flammability, explosivity).
Signatures of personnel responsible for observations.

Sampling situations vary widely. No general rule can be given as to the extent of information that must be entered in the logbook. A good rule, however, is to record sufficient information so that anyone can reconstruct the sampling without reliance on the collector's memory. The logbook must be stored safely.

To establish the documentation necessary to trace sample possession from the time of collection, a chain-of-custody record should be filled out and should accompany every sample. This record becomes especially important if the sample is to be introduced as evidence in a court litigation. (A chain-of-custody record is illustrated in Figure 9-18.)

The record should contain, minimally, the following information:

Sample number.
Signature of collector.
Date and time of collection.
Place and address of collection.
Waste type.
Signature of persons involved in the chain of possession.
Inclusive dates of possession.

The sample analysis request sheet (Figure 9-19) is intended to accompany the sample on delivery to the laboratory. The field portion of this form is completed by the person collecting the sample and should include most of the pertinent information noted in the logbook. The laboratory portion of this form is intended to be completed by laboratory personnel and to include, minimally:

Name of person receiving the sample.
Laboratory sample number.
Date and time of sample receipt.
Sample allocation.
Analyses to be performed.

The sample should be delivered to the laboratory for analysis as soon as practicable -- usually within 1 or 2 days after sampling. The sample must be accompanied by the chain-of-custody record (Figure 9-18) and by a sample analysis request sheet (Figure 9-19). The sample must be delivered to the person in the laboratory authorized to receive samples (often referred to as the sample custodian).

CHAIN OF CUSTODY RECORD

Proj No.	Project Name												
Samplers (Signature)													
Sta. No.	Date	Time	Comp.	Grab	Station Location	No. of Containers							Remarks

Relinquished by: (Signature)	Date Time	Received by: (Signature)	Relinquished by: (Signature)	Date Time	Received by: (Signature)
Relinquished by: (Signature)	Date Time	Received by: (Signature)	Relinquished by: (Signature)	Date Time	Received by: (Signature)
Relinquished by: (Signature)	Date Time	Received for Laboratory by: (Signature)		Remarks	

Figure 9-18.

SAMPLING ANALYSIS REQUEST

Part I: Field Section

Collector _____ Date Sampled _____ Time _____ hours

Affiliation of Sampler _____

Address _____
number street city state zip

Telephone ( ) _____ Company Contact _____

LABORATORY SAMPLE NUMBER	COLLECTOR'S SAMPLE NO.	TYPE OF SAMPLE*	FIELD INFORMATION**

Analysis Requested _____

_____

_____

Special Handling and/or Storage _____

_____

PART II: LABORATORY SECTION**

Received by _____ Title _____ Date _____

Analysis Required _____

_____

* Indicate whether sample is soil, sludge, etc.
**Use back of page for additional information relative to sample location.

Figure 9-19. Example of hazardous waste sample analysis sheet.

Any material that is identified in the DOT Hazardous Material Table (49 CFR 172.101) must be transported as prescribed in the table. All other hazardous waste samples must be transported as follows:

1. Collect sample in a 16-oz or smaller glass or polyethylene container with nonmetallic Teflon-lined screw cap. For liquids, allow sufficient air space (approximately 10% by volume) so that the container is not full at 54°C (130°F). If collecting a solid material, the container plus contents should not exceed 1 lb net weight. If sampling for volatile organic analysis, fill VOA container to septum but place the VOA container inside a 16-oz or smaller container so that the required air space may be provided. Large quantities, up to 3.785 liters (1 gal), may be collected if the sample's flash point is 23°C (75°F) or higher. In this case, the flash point must be marked on the outside container (e.g., carton or cooler), and shipping papers should state that "Flash point is 73°F or higher."

2. Seal sample and place in a 4-mil-thick polyethylene bag, one sample per bag.

3. Place sealed bag inside a metal can with noncombustible, absorbent cushioning material (e.g., vermiculite or earth) to prevent breakage, one bag per can. Pressure-close the can and use clips, tape, or other positive means to hold the lid securely.

4. Mark the can with:

   Name and address of originator.
   "Flammable Liquid, N.O.S. UN 1993."
   (or, "Flammable Solid, N.O.S. UN 1325".)

NOTE: UN numbers are now required in proper shipping names.

---

5. Place one or more metal cans in a strong outside container such as a picnic cooler or fiberboard box. Preservatives are not used for hazardous waste site samples.

6. Prepare for shipping: The words "Flammable Liquid, N.O.S. UN 1993" or "Flammable Solid, N.O.S. UN 1325"; "Cargo Aircraft Only" (if more than 1 qt net per outside package); "Limited Quantity" or "Ltd. Qty."; "Laboratory Samples"; "Net Weight ___" or "Net Volume ___" (of hazardous contents) should be indicated on shipping papers and on the outside of the outside shipping container. The words "This Side Up" or "This End Up" should also be on container. Sign the shipper certification.

7. Stand by for possible carrier requests to open outside containers for inspection or to modify packaging. (It is wise to contact carrier before packing to ascertain local packaging requirements.) Remain in the departure area until the carrier vehicle (aircraft, truck, etc.) is on its way.

At the laboratory, a sample custodian should be assigned to receive the samples. Upon receipt of a sample, the custodian should inspect the condition of the sample and the sample seal, reconcile the information on the sample label and seal against that on the chain-of-custody record, assign a laboratory number, log in the sample in the laboratory logbook, and store it in a secured sample storage room or cabinet until it is assigned to an analyst for analysis.

The sample custodian should inspect the sample for any leakage from the container. A leaky container containing a multiphase sample should not be accepted for analysis. This sample will no longer be a representative sample. If the sample is contained in a plastic bottle and the container walls show that the sample is under pressure or releasing gases, the sample should be treated with caution because it may be explosive or release extremely poisonous gases. The custodian should examine whether the sample seal is intact or broken, because a broken seal may mean sample tampering and would make analysis results inadmissible as evidence in court. Any discrepancies between the information on the sample label and seal and the information that is on the chain-of-custody record and the sample analysis request sheet should be resolved before the sample is assigned for analysis. This effort might require communication with the sample collector. Results of the inspection should be noted on the sample analysis request sheet and on the laboratory sample logbook.

Incoming samples usually carry the inspector's or collector's identification numbers. To identify these samples further, the laboratory should assign its own identification numbers, which normally are given consecutively. Each sample should be marked with the assigned laboratory number. This number is correspondingly recorded on a laboratory sample log book along with the information describing the sample. The sample information is copied from the sample analysis request sheet and cross-checked against that on the sample label.

In most cases, the laboratory supervisor assigns the sample for analysis. The supervisor should review the information on the sample analysis request sheet, which now includes inspection notes recorded by the laboratory sample custodian. The technician assigned to analysis should record in the laboratory notebook the identifying information about the sample, the date of receipt, and other pertinent information. This record should also include the subsequent testing data and calculations. The sample may have to be split with other laboratories in order to obtain all the necessary analytical information. In this case, the same type of chain-of-custody procedures must be employed while the sample is being transported and at the other laboratory.

Once the sample has been received in the laboratory, the supervisor or his/her assignee is responsible for its care and custody. That person should be prepared to testify that the sample was in his/her possession or secured in the laboratory at all times, from the moment it was received from the custodian until the analyses were performed.

9.2.3 Sample Plan Implementation

Prior to implementing a sampling plan, it is often strategic to walk through the sampling plan mentally, starting with the preparation of equipment until the time when samples are received at the laboratory. This mental excursion should be in as much detail as can be imagined, because the small details are the ones most frequently overlooked. By employing this technique, items not included on the equipment list may be discovered, as well as any major oversight that could cause the sampling effort to fail. During this review of the sampling plan, an attempt should be made to anticipate what could go wrong. A solution to anticipated problems should be found, and, if necessary, materials needed for solving these problems should be added to the equipment list.

The remainder of this section discusses examples of sampling strategies for different situations that may be encountered.

Containers

Prior to discussing the sampling of containers, the term must be defined. The term container, as used here, refers to receptacles that are designed for transporting materials, e.g., drums and other smaller receptacles, as opposed to stationary tanks. Weighted bottles, Coliwasas, drum thiefs, or triers are the sampling devices that are chosen for the sampling of containers. (See Section 9.2.2.4 for a full discussion of sampling equipment.)

The sampling strategy for containers varies according to (1) the number of containers to be sampled and (2) access to the containers. Ideally, if the waste is contained in several containers, every container will be sampled. If this is not possible due to the large number of containers or to cost factors, a subset of individual containers must be randomly selected for sampling. This can be done by assigning each container a number and then randomly choosing a set of numbers for sampling.

Access to a container will affect the number of samples that can be taken from the container and the location within the container from which samples can be taken. Ideally, several samples should be taken from locations displaced both vertically and horizontally throughout the waste. The number of samples required for reliable sampling will vary depending on the distribution of the waste components in the container. At a minimum with an unknown waste, a sufficient number and distribution of samples should be taken to address any possible vertical anomalies in the waste. This is because contained wastes have a much greater tendency to be nonrandomly heterogeneous in a vertical rather than a horizontal direction due to (1) settling of solids and the denser phases of liquids and (2) variation in the content of the waste as it enters the container. Bags, paper drums, and open-headed steel drums (of which the entire top can be removed) generally do not restrict access to the waste and therefore do not limit sampling.

When access to a container is unlimited, a useful strategy for obtaining a representative set of samples is a three-dimensional simple random sampling strategy in which the container is divided by constructing an imaginary three-dimensional grid (see Figure 9-20), as follows. First, the top surface of the waste is divided into a grid whose sections either approximate the size of the sampling device or are larger than the sampling device if the container is large. (Cylindrical containers can be divided into imaginary concentric circles, which are then further divided into grids of equal size.) Each section is assigned a number. The height of the container is then divided into imaginary levels that are at least as large as the vertical space required by the chosen sampling device. These imaginary levels are then assigned numbers. Specific levels and grid locations are then selected for sampling using a random-number table or random-number generator. (An alternative means of choosing random sampling locations using circumference and diameter dimensions is discussed in Section 9.2.2.1.)

Another appropriate sampling approach is the two-dimensional simple random sampling strategy, which can usually yield a more precise sampling when fewer samples are collected. This strategy involves (1) dividing the top surface of the waste into an imaginary grid as in the three-dimensional strategy, (2) selecting grid sections for sampling using random-number tables or random-number generators, and (3) sampling each selected grid point in a vertical manner along the entire length from top to bottom using a sampling device such as a drum thief or Coliwasa.

Some containers, such as drums with bung openings, limit access to the contained waste and restrict sampling to a single vertical plane. Samples taken in this manner can be considered representative of the entire container only if the waste is known to be homogeneous or if no horizontal stratification has occurred. Precautions must be taken when sampling any type of steel drum because the drum may explode or expel gases and/or pressurized liquids. An EPA/NEIC manual, "Safety Manual for Hazardous Waste Site Investigation," addresses these safety precautions.

Tanks

Tanks are essentially large containers. The considerations involved in sampling tanks are therefore similar to those for sampling containers. As with containers, the goal of sampling tanks is to acquire a sufficient number of samples from different locations within the waste to provide analytical data that are representative of the entire tank contents.

The accessibility of the tank contents will affect the sampling methodology. If the tank is an open one, allowing unrestricted access, then usually a representative set of samples is best obtained using the three-dimensional simple random sampling strategy, as described for containers (see also Section 9.2.2.1). This strategy involves dividing the tank contents into an imaginary three-dimensional grid. As a first step, the top surface of the waste is divided into a grid whose sections either approximate the size of the sampling device or are larger than the sampling device if the tank is large.

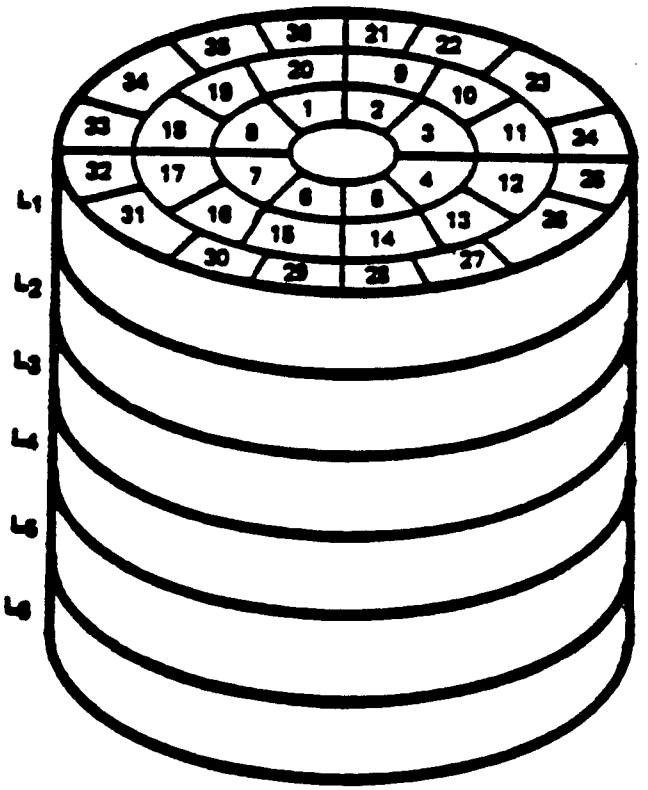

Figure 9-20. Container divided into an imaginary three-dimensional grid.

(Cylindrical tanks can be divided into imaginary concentric circles, which are then further divided into grids of equal size.) Each section is assigned a number. The height of the tank is then divided into imaginary levels that are at least as large as the vertical space required by the chosen sampling device. These imaginary levels are assigned numbers. Specific levels and grid locations are then selected for sampling using a random-number table or random-number generator.

A less comprehensive sampling approach may be appropriate if information regarding the distribution of waste components is known or assumed (e.g., if vertical compositing will yield a representative sample). In such cases, a two-dimensional simple random sampling strategy may be appropriate. In this strategy, the top surface of the waste is divided into an imaginary grid; grid sections are selected using random-number tables or random-number generators; and each selected grid point is then sampled in a vertical manner along the entire length from top to bottom using a sampling device such as a weighted bottle, a drum thief, or Coliwasa. If the waste is known to consist of two or more discrete strata, a more precise representation of the tank contents can be obtained by using a stratified random sampling strategy, i.e., by sampling each stratum separately using the two- or three-dimensional simple random sampling strategy.

Some tanks permit only limited access to their contents, which restricts the locations within the tank from which samples can be taken. If sampling is restricted, the sampling strategy must, at a minimum, take sufficient samples to address the potential vertical anomalies in the waste in order to be considered representative. This is because contained wastes tend to display vertical, rather than horizontal, nonrandom heterogeneity due to settling of suspended solids or denser liquid phases. If access restricts sampling to a portion of the tank contents (e.g., in an open tank, the size of the tank may restrict sampling to the perimeter of the tank; in a closed tank, the only access to the waste may be through inspection ports), then the resulting analytical data will be deemed representative only of the accessed area, not of the entire tank contents unless the tank contents are known to be homogeneous.

If a limited access tank is to be sampled, and little is known about the distribution of components within the waste, a set of samples that is representative of the entire tank contents can be obtained by taking a series of samples as the tank contents are being drained. This should be done in a simple random manner by estimating how long it will take to drain the tank and then randomly selecting times during drainage for sampling.

The most appropriate type of sampling device for tanks depends on the tank parameters. In general, subsurface samplers (i.e., pond samplers) are used for shallow tanks, and weighted bottles are usually employed for tanks deeper than 5 ft. Dippers are useful for sampling pipe effluents.

MATERIALS ACCEPTED BY ENVIROCARE

- MIXED WASTE
  - CHARACTERISTIC HAZARDOUS WASTES MEETING TREATMENT STANDARDS

    IGNITABLE
    CORROSIVE
    REACTIVE
    TOXIC
  - LISTED HAZARDOUS WASTES MEETING TREATMENT STANDARDS

    F - LISTED
    K - LISTED
    P - LISTED
    U - LISTED
- NORM *and* NARM (Naturally Occurring *and* Accelerator Produced Radioactive Material)
- LARW (Low-Activity Radioactive Waste)
  - SOURCE MATERIAL
  - SPECIAL NUCLEAR MATERIAL (SNM)
  - BYPRODUCT [11e.(1)]
- 1993 EXPECTED ADDITIONS
  - 11e.(2) (URANIUM MILL TAILINGS)
  - ADDITIONAL NARM, SNM, BYPRODUCT [11e.(1)] NUCLIDES
  - LIGHT TREATMENT OF CONTAMINATED MIXED WASTE

ACCEPTABLE ISOTOPES

TYPE AND CONCENTRATION

RADIOACTIVE MATERIAL	CONCENTRATION
Silver-110m	5.6E+02 pCi/g
Americium-241	2.3E+02 pCi/g
Americium-243	1.7E+03 pCi/g
Beryllium-7	3.8E+04 pCi/g
Calcium-45	4.0E+08 pCi/g
Cadmium-109	4.6E+04 pCi/g
Cobalt-56	3.6E+02 pCi/g
Cobalt-57	1.9E+04 pCi/g
Cobalt-58	1.6E+03 pCi/g
Cobalt-60	3.6E+02 pCi/g
Chromium-51	6.8E+04 pCi/g
Cesium-134	1.2E+03 pCi/g
Cesium-137	5.6E+02 pCi/g
Europium-152	1.7E+03 pCi/g
Europium-154	1.4E+03 pCi/g
Iron-55	1.8E+06 pCi/g
Mercury-203	1.0E+04 pCi/g
Potassium-40	1.0E+04 pCi/g
Iridium-192	2.5E+03 pCi/g
Manganese-54	5.6E+03 pCi/g
Niobium-94	1.6E+02 pCi/g
Nickel-59	7.0E+02 pCi/g
Nickel-63	2.0E+06 pCi/g
Lead-210	2.3E+05 pCi/g*
Polonium-210	2.0E+04 pCi/g
Radium-226	2.0E+03 pCi/g*
Radium-228	1.8E+03 pCi/g
Radium-228 (1 yr)@	1.2E+03 pCi/g*
Radium-228 (5 yrs)@	6.7E+02 pCi/g*
Radium-228 (10 yrs)@	5.6E+02 pCi/g*
Ruthenium-106	1.9E+04 pCi/g*
Antimony-124	7.9E+02 pCi/g

RADIOACTIVE MATERIAL	CONCENTRATION
Antimony-125	5.3E+03 pCi/g
Tin-113	7.3E+05 pCi/g
Strontium-90	2.0E+04 pCi/g
Thorium-230	1.5E+04 pCi/g
Thorium-232	6.8E+02 pCi/g*
Uranium-234	3.7E+04 pCi/g
Uranium-235	7.7E+02 pCi/g
Uranium-236	3.6E+04 pCi/g
Uranium-238	2.8E+04 pCi/g
Uranium-natural	1.8E+04 pCi/g
Uranium-depleted	1.1E+05 pCi/g
Zinc-65	1.1E+04 pCi/g
+Curium-242	1.4E+06 pCi/g
+Curium-242	8.1E+03 pCi/g*
+Curium-243	1.5E+03 pCi/g
+Curium-243	1.3E+03 pCi/g*
+Curium-244	1.0E+04 pCi/g
+Curium-244	7.4E+03 pCi/g*
+Neptunium-237	2.0E+03 pCi/g
+Plutonium-238	1.0E+04 pCi/g
+Plutonium-238	8.2E+03 pCi/g*
+Plutonium-239	9.9E+03 pCi/g
+Plutonium-240	1.0E+04 pCi/g
+Plutonium-241	3.5E+05 pCi/g
+Plutonium-241	1.1E+03 pCi/g*
+Plutonium-242	1.0E+04 pCi/g
+Carbon-14	5.0E+05 pCi/g
+Hydrogen-3	2.5E+07 pCi/g
+Iodine-129	3.1E+03 pCi/g
+Sodium-22	7.8E+02 pCi/g
+Technicium-99	1.9E+05 pCi/g

+Future Isotopes
*Daughters are assumed to be present at same concentrations in equilibrium
@Time after separation of RA-228 from daughter products

QUALIFICATION PROCESS FOR RADIOACTIVE MATERIAL

- COMPLETE LOW-ACTIVITY PROFILE (EC-0200)
- COMPLETE PHYSICAL PROPERTIES FORM (EC-0500)
- COMPLETE RADIOLOGICAL EVALUATION (EC-0650)
- ANALYSES REQUIRED (UTAH CERTIFIED LAB):
  - SOIL pH/PAINT FILTER LIQUIDS TEST
  - HYDROGEN CYANIDE
  - HYDROGEN SULFIDE
  - TCLP (8 METALS / 32 ORGANICS)
  - GAMMA SPECTROSCOPY (NATURAL & MAN-MADE ISOTOPES)
  - ISOTOPIC ANALYSIS (IF NEEDED)
- SAMPLES REQUIRED:
  - SEND A MINIMUM OF 5 2-POUND DIVERSE, REPRESENTATIVE SAMPLES
  - SEND A MINIMUM OF 1 50-POUND REPRESENTATIVE SAMPLE

QUALIFICATION PROCESS FOR MIXED WASTE

- COMPLETE MIXED WASTE PROFILE (EC-0175)
- COMPLETE PHYSICAL PROPERTIES FORM (EC-0500)
- COMPLETE RADIOLOGICAL EVALUATION (EC-0650)
- ANALYSES REQUIRED (UTAH CERTIFIED LAB):
  - SOIL pH/PAINT FILTER LIQUIDS TEST
  - HYDROGEN CYANIDE
  - HYDROGEN SULFIDE
  - TCLP (8 METALS / 32 ORGANICS)
  - TOX (TOTAL ORGANIC HALIDES)
  - GAMMA SPECTROSCOPY (NATURAL & MAN-MADE ISOTOPES)
  - ISOTOPIC ANALYSIS (IF NEEDED)
- SAMPLES REQUIRED:
  - SEND A MINIMUM OF 5 2-POUND DIVERSE, REPRESENTATIVE SAMPLES
  - SEND A MINIMUM OF 1 50-POUND REPRESENTATIVE SAMPLE

ACCEPTANCE AND SHIPMENT PROCESS

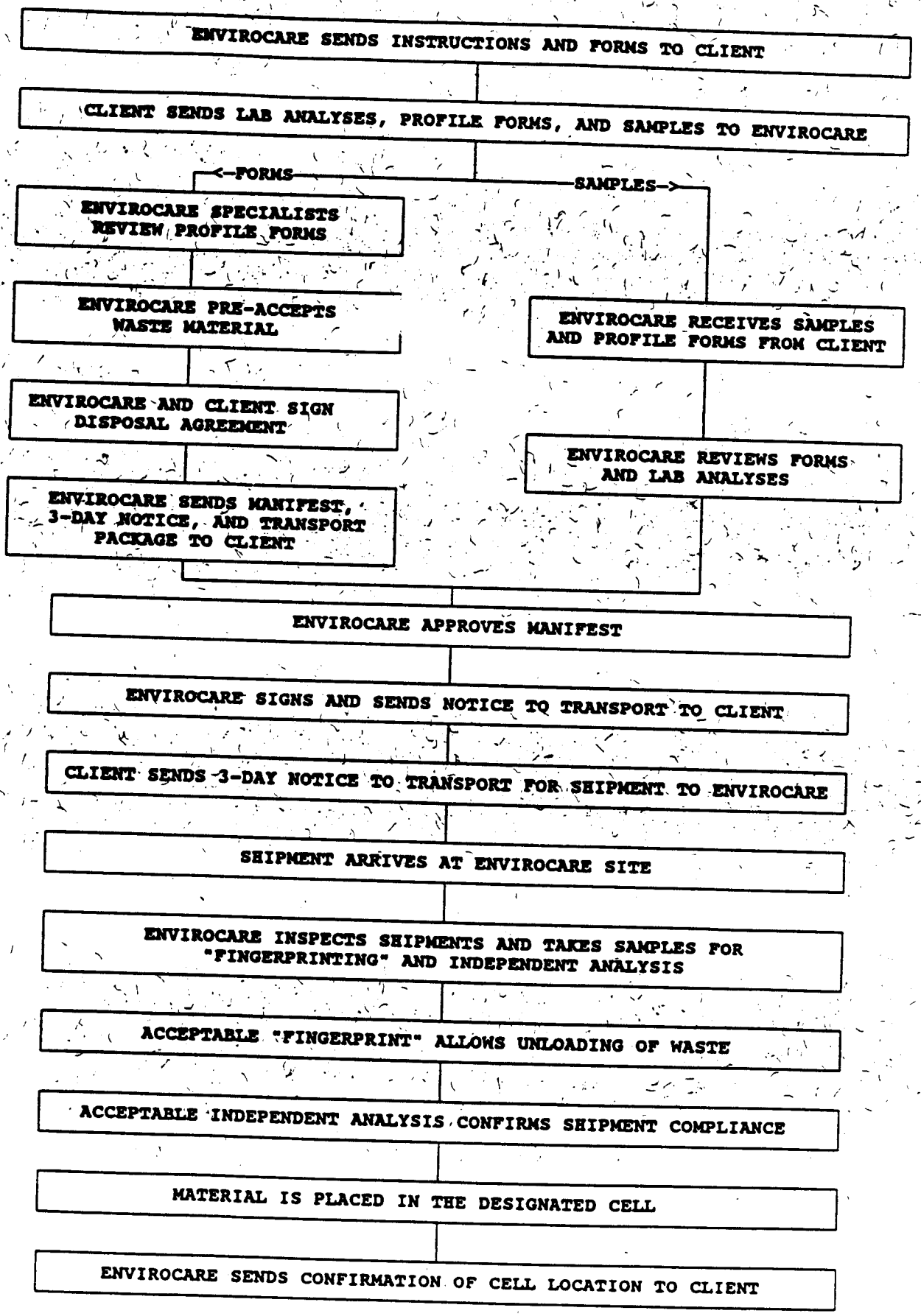

ENVIROCARE
OF UTAH, INC.

PHYSICAL PROPERTIES RECORD

(EC-0500)

(Rev. 05/93)

Generator Name: _____; Generator #/Waste Stream #: _____

Contractor Name: _____; Waste Stream Name: _____

Volume of Waste Material: _____; __ LARW, __ MW; Delivery Date: _____

Name & Title of Person Completing Form: _____; Date: _____

In order to comply with Envirocare's radioactive material disposal license #2300249 issued by the Utah Bureau of Radiation Control, Envirocare requires generators to provide the following physical properties information. Should you have any questions while completing this form, contact Envirocare's Vice President of Operations at (801) 532-1330. **WASTE CANNOT BE ACCEPTED AT ENVIROCARE OF UTAH UNLESS THIS FORM IS COMPLETE AND A SAMPLE OF THE WASTE SUBMITTED.**

1. GENERATOR INFORMATION

EPA ID # _____

Name of Generator _____

Mailing Address _____

_____

Phone _____

Fax _____

Location of Material _____

Generator Contact _____

Title _____

Mailing Address _____

_____

Phone _____

Fax _____

2. MOISTURE CONTENT

Optimum Moisture Content: _____ %

(Use Std Proctor Method ASTM D-698)
Average Moisture Content: _____ %

Moisture Content Range: _____ %

3. SAMPLE OF WASTE.

Please send a 50 pound gallon sample of material to Envirocare of Utah, Inc.

_____ Sample has been sent

4. GENERAL CHARACTERISTICS (% of each)

_____ Soil _____ Building Debris

_____ Rubble _____ Pipe Scale

_____ Tailings _____ Process Waste

_____ Concrete _____ Plastic/Resin

5. GRADATION OF MATERIAL

(Please indicate the percentage of the material that would pass through the following sizes of screen.)

12" _____ %

4" _____ %

1" _____ %

1/4" _____ %

1/40" _____ %

1/200" _____ %

6. TRANSPORTATION MODES

(Please indicate the option[s] for delivery to the site. Check all that apply.)

___ Highway ___ Railroad

___ B-12 Boxes ___ B-25 Boxes

___ Bulk Shipment ___ Gondola

___ 55-Gal. Drums (Specify) ___ Bags of the waste

___ Other _____ (Specify)

7. DESCRIPTION OF WASTE

(Please describe the waste in the space below with respect to its physical composition and characteristics. Note any items of concern.)

_____

GENERATOR'S CERTIFICATION OF WASTE: As the generator of this waste, I certify to Envirocare of Utah, Inc., that the information provided on this form is complete, true and correct, and is accurately supported and documented by any laboratory testing, as required by Envirocare of Utah, Inc. The results of any said testing have been submitted to Envirocare of Utah, Inc.

Signature for above certification _____ DATE _____

ENVIROCARE OF UTAH, INC.

INSTRUCTIONS FOR FORM EC-0175
MIXED WASTE PROFILE RECORD

PURPOSE. The Mixed Waste Profile Record provides certified documentation from the generator of the properties of the waste to be disposed of at Envirocare. The information you provide with this form is very important. It is used for waste management and compliance purposes and is referred to by the disposal agreement or contract. Therefore, please fill out Form EC-0175 as completely and accurately as possible.

IN COMPLETING THE FORM, IT IS VERY IMPORTANT TO PROVIDE ALL APPLICABLE EPA HAZARDOUS WASTE NUMBERS OR CODES IN ITEM NUMBER 7 ON PAGE 2 OF THE FORM. (See the instructions for Item Number 7.)

SIGNATORY REQUIREMENTS. Once Form EC-0175 has been completed, the initial or legal generator of the waste must sign the form and place his/her initials on each page of the profile. The person who signs as the generator should have overall organizational responsibility for the management of the waste. The generator must sign and initial the completed form even when the waste has been manifested and transported to a permitted storage facility at a different location.

CERTIFYING SIGNATURE. The signature of the generator at the bottom of the first page of the form is a certifying signature. Before signing the completed form, the generator should read and understand the certifications.

ITEMS NOT APPLICABLE. When an item in the form is not applicable, the generator should place N/A or a similar expression as a response. In addition, an explanation and justification of the non-applicability should be provided in Item Number 7 on page 2 of the form.

***** INSTRUCTIONS FOR PAGE 1 OF EC-0175 *****

ITEM NUMBER 1 -- GENERATOR INFORMATION. This information is applicable to the initial generator of the waste and to the location that the waste was generated. The contact person for the disposal project must also be provided. If the waste will be manifested to Envirocare from another generator or if the waste has been moved from the location of initial generation, please describe the situation in Item Number 7 on page 2 of the form.

ITEM NUMBER 2 -- WASTE STREAM INFORMATION. Please be as consistent as possible with the waste stream name. The waste stream name should be concise, descriptive, and recognizable to the generator. Any distinctive color or odor for the waste should be provided.

ENVIROCARE OF UTAH, INC.

ITEM NUMBER 3 -- WASTE PHYSICAL PROPERTIES. Indicate which of the listed properties most accurately applies to the waste stream.

ITEM NUMBER 4 -- DENSITY. Please provide or estimate the density of the waste. Density may be provided as a result of analysis or through knowledge of the waste. Circle the appropriate dimensions. (S.G. is for specific gravity where water at 4°C is 1 g/ml.)

ITEM NUMBER 5 -- IGNITABILITY. Please indicate the flash point, if applicable, of the waste. Indicate whether the waste is an oxidizer as defined by 40 CFR 261.21(a)(4).

ITEM NUMBER 6 -- CHEMICAL COMPOSITION. Many generators know the composition of their waste through material balance knowledge, analysis, inherent composition or otherwise. Where chemicals or constituents of the waste are known, please indicate the component and concentration. The HOC value should be provided from the result of analysis for Total Organic Halides (TOX) or from SW-846 Methods 8240 and 8270. When Methods 8240 and 8270 are used, the HOC value is the sum of the results of the compounds in Item 17.

A generator may provide estimates of composition (e.g. 98% soil and debris). Other than for the HOC value, it is not required to conduct additional analyses of the waste solely to complete this item.

Knowledge of the waste may be used or chemical composition may be addressed in the description of the waste in Item Number 7 on page 2 of the form. However, where concentrations of constituents are known, please provide this information in this item.

***** INSTRUCTIONS FOR PAGE 2 OF EC-0175 *****

ITEM NUMBER 7 -- HAZARDOUS WASTE DETERMINATION, DESCRIPTION AND CHECKLIST. In this item, the generator is to provide a written, comprehensive description of the waste along with explanations and justifications from other responses in the form. The generator should fully describe the waste as instructed. Use additional pages if necessary.

Items in the form determined to be non-applicable or otherwise incompletely described should be fully justified or described in Item Number 7.

A detailed visual description of the waste is to be provided in this item. When a waste arrives at Envirocare, the waste will be visually inspected and compared with this description. Shipments will be rejected when the description does not match the waste on the shipment.

For each compound detected in laboratory analyses, the generator should explain the presence of the compound and whether the EPA Waste Codes or Numbers which correspond to the compound are applicable. Any applicable exclusion or exemption for the waste should be fully explained. For example, if a waste is analyzed to contain trace quantities of benzene, and if the generator determines the waste to have EPA Hazardous Waste Numbers or Codes other than those applicable to benzene (i.e., U019, D018, and/or F005), then the generator should provide a corresponding justification or statement as to why any of the benzene-related codes or numbers are not applicable.

***** VERY IMPORTANT ***** All applicable EPA Hazardous Waste Codes or Numbers should be listed in the space provided.

ITEM NUMBER 8 -- HISTORY OF WASTE SINCE GENERATION. Wastes that have been transported or manifested from their initial generation location be noted as such in the responses to these questions.

***** INSTRUCTIONS FOR PAGES 3-4 OF EC-0175 *****

ITEM NUMBER 9 -- LIST ALL KNOWN AND POSSIBLE CHEMICAL COMPONENTS OR HAZARDOUS WASTE CHARACTERISTICS. This item requires the generator to perform a checklist of known or possible components of the waste. A laboratory analysis is not required for each element in this item. However, an appropriate level of research should be done to determine whether the element in question is associated with this waste. The research should include file reviews, operational reviews, reviews of analytical results, and interviews of individuals who have operated associated processes. Where known or possible association or composition with regard to these elements (a-gg) can be made, the response should be checked or under the "Y" column, and an explanation of this indication should be made as part of the description in Item Number 7 on page 2 of the form.

If, as a result of this exercise, additional known or possible chemical components are identified, those should be noted in hh. and described in Item Number 7.

ITEM NUMBER 10 -- REQUIRED CHEMICAL LABORATORY ANALYSIS CHECKLIST. Sample results from Utah-certified laboratories are required for the waste and should be submitted to address the elements identified in this item.

All analytical results should be submitted with the completed form. Where a parameter or class of analysis does not apply, an indication of non-applicability should be made with a corresponding justification in Item Number 7 on page 2.

In general, data from Utah-certified laboratories must be provided.

Please note that, in most instances, analytical results for 10A, 10B, 10C, and at least one of the remaining elements in this item are required.

ITEM NUMBER 11 -- SAMPLE OF WASTE TO ENVIROCARE. For the 5 representative samples, please send 5 samples that separately represent the diversity, possible extremes, and average of the waste stream. These samples will be analyzed for the 10 incoming-shipment parameters for which samples of the incoming-shipments of this waste will be analyzed.

Results of the on-site analyses of these 5 preliminary samples will be used to establish the range of tolerances for the results of analyses of samples from the incoming shipments. Therefore, if a shipment of the waste stream arrives and the results of an analysis of that sample is beyond this range, the shipment may be rejected or an additional waste profile record form EC-0175 may be required to be completed before the waste may be accepted. THIS ISSUE IS VERY IMPORTANT since the delay required to fully correct the problem may take weeks and may necessitate a return of the shipment to the shipper.

***** INSTRUCTIONS FOR PAGE 5 OF EC-0175 *****

ITEM NUMBER 12 -- OTHER REQUIRED ANALYSES BASED ON THE RESPONSES AND RESULTS IN 9 AND 10. This item is dynamic with the responses in 9 and 10. Where a "Y" answer or a positive indication of the presence of the identified items in 9 or 10 are provided, additional analyses will be needed to fully evaluate the waste.

Item 12A addresses the presence or association of non-specific organic compounds in the waste -- the additional requirements in those cases are to provide analytical results to address the question of which EPA Hazardous Waste Number or Codes may be applicable to the waste.

Item 12B addresses the presence or association of dioxins in the waste -- results of analytical method SW-846 8280 are needed to enable a full evaluation of the waste for acceptance at Envirocare.

Items 12C and 12D addresses the presence or association of the waste with PCB's pesticides and/or herbicides -- additional analytical results or explanations are needed to address this issue.

Item 12E addresses the presence or association of the waste with cyanides -- a total and amenable cyanide analytical result is required when 9d is checked (Y) or when the result in 10 B is greater than 20 mg/kg.

ITEM NUMBER 13 -- ANALYTICAL RESULTS FOR REQUIRED PARAMETERS. The generator should provide the results of the corresponding required analyses in the appropriate spaces.

ITEM NUMBER 14 -- ANALYTICAL RESULTS FOR CHARACTERISTIC HEAVY METALS. The generator should provide the results of total or TCLP heavy metals analyses in the appropriate spaces.

***** INSTRUCTIONS FOR PAGE 6 OF EC-0175 *****

ITEM NUMBER 15 -- HAZARDOUS WASTE TREATMENT STANDARDS. For each EPA Hazardous Waste Number or Code listed in Item Number 7 on page 2, provide the subcategory, treatability group, treatment standard, and applicable exemptions, extensions, and/or variances. Most of this information for corresponding waste codes can be obtained from the tables and text of 40 CFR 268.40 through 268.43.

SUBCATEGORIES. Some EPA Hazardous Waste Numbers or Codes have subcategories. Many do not. If the waste does not fit into one of the subcategories then a subcategory is not applicable. The subcategory is usually listed in parentheses in either the Waste-Code column or the Waste-descriptions-and/or-treatment-subcategory column in the tables in 40 CFR 268.41 through 268.43. A good example of an EPA Hazardous Waste Number or Code is D009, TCLP for mercury. There are many subcategories of this code -- low mercury subcategory from Table CCWE in 40 CFR 268.41; high mercury subcategory from Table 2, 40 CFR 268.42; elemental mercury contaminated with radioactive materials category from Table 3, 40 CFR 268.42; hydraulic oil contaminated with Mercury Radioactive Materials Subcategory.

TREATABILITY GROUPS. There are two main treatability groups -- wastewaters and nonwastewaters.

Wastewaters are wastes that contain less than 1% by weight total organic carbon (TOC) and less than 1% by weight total suspended solids (TSS) with some exceptions listed in 40 CFR 268.2(f).

TREATMENT STANDARDS. The treatment standards for an EPA Hazardous Waste Number or Code are found by looking on the tables for the corresponding codes, subcategories and treatability groups in the tables in 40 CFR 268.41 through 268.43. These standards should be listed in the treatment standards column.

EXEMPTIONS, VARIANCES, EXTENSIONS OR EXCLUSIONS. Where there are such exemptions to the requirement of a treatment standard for disposal, please list the applicable exemption.

ENVIROCARE OF UTAH, INC.

ITEM NUMBER 16 -- GENERATOR'S RESPONSIBILITY TO DETERMINE HAZARDOUS WASTE NUMBERS AND TREATMENT STANDARDS. These are important reminders which should be read and understood by the generator.

Please note that a MANIFEST AND A CERTIFICATION OR NOTICE must accompany the waste shipments (see 40 CFR 268.7[a]). Failure to provide both the completed manifest and certification or notice may result in the rejection of the waste upon arrival at the Envirocare facility.

***** INSTRUCTIONS FOR PAGE 7 OF EC-0175 *****

ITEM NUMBER 17 -- LIST OF HALOGENATED ORGANIC COMPOUNDS (HOCs) BY METHOD. Envirocare's permit requires that an analysis of the waste for Total Organic Halides (TOX) or SW-846 Methods 8270 and 8240 be performed prior to shipment. Please submit TOX results with form EC-0175. The generator should provide information in Item Number 6 as to the concentration of HOC's in the waste as a result of the TOX test or the 8240 and 8270 tests. The list provided in Item Number 17 is the list of applicable HOC's. If a waste has a high level of organic halides, the generator may be required to test the waste for the presence of the chemicals listed in Item Number 17 using additional methods.

ITEM NUMBER 18 -- UTAH-CERTIFIED AND EPA CLP LABORATORIES. Item Number 18 provides a reminder and caution to the generator as to the issue of certified laboratories. Please read and understand these items.

***** INSTRUCTIONS FOR PAGE 8 OF EC-0175 *****

Page 8 provides an update of permit regulations for TOX testing and Utah-certified laboratories.

ENVIROCARE
OF UTAH, INC.

MIXED WASTE PROFILE RECORD

(EC-0175) (Rev. 05/93)

Generator Name: _____; Generator #/Waste Stream #: _____

Contractor Name: _____; Waste Stream Name: _____

Volume of Waste Material: _____; __ LARW, __ MW; Delivery Date: _____

Name & Title of Person Completing Form: _____; Date: _____

Please read carefully and complete this form for one waste stream. This information will be used to determine how to properly manage your waste. Should you have any questions while completing this form, contact Envirocare at (801) 532-1330. **WASTES CANNOT BE ACCEPTED AT ENVIROCARE OF UTAH UNLESS THIS FORM IS COMPLETED.** If a category does not apply, please indicate. **This form must be updated annually.**

1. GENERATOR INFORMATION

EPA ID # _____

Name of Generator _____

Mailing Address _____

_____

_____

Phone _____

Fax _____

Location of Material _____

Generator Contact _____

Title _____

Mailing Address _____

_____

Phone _____

Fax _____

2. WASTE STREAM INFORMATION Waste Stream # _____

Waste Name _____

Color _____ Odor _____

Generation Rate or Total Amount _____

3. WASTE PHYSICAL PROPERTIES

_____ Liquid _____ Solid

_____ Sludge _____ Powder/Dust

4. DENSITY (Indicate dimensions)

_____ S.G. lb./ft^3 lb./yd^3

5. IGNITABILITY (40 CFR 262.21[a][2],[4].)

Flash Point _____ °F °C

Oxidizer(s) Y N

6. CHEMICAL COMPOSITION (List all known chemical or other constituents and circle the applicable concentration dimensions. Use attachements to complete, if necessary.)

Chemical Component	Concentration	
_____	_____	% mg/kg
_____	_____	% mg/kg
_____	_____	% mg/kg
_____	_____	% mg/kg
_____	_____	% mg/kg

Halogenated Organic (HOC) Compounds (Sum of the list of HOCs in 17.) _____ mg/kg

GENERATOR'S CERTIFICATION OF REPRESENTATIVE SAMPLES, ANALYTICAL RESULTS FROM QUALIFIED LABORATORIES, USE OF APPROVED ANALYTICAL AND SAMPLING METHODS: I certify that samples representative of the waste described in this Waste Profile Record were or shall be obtained using state- and EPA-approved sampling methods. I also certify that where necessary those representative samples were or shall be provided to Envirocare and to qualified and reputable laboratories for the analytical results reported herein.

GENERATOR'S STATEMENT AND CERTIFICATION THAT THE WASTE IS NOT PROHIBITED FROM LAND DISPOSAL: I further certify that the waste described in this record is not prohibited from land disposal in 40 CFR 268, and that the information provided on this form is complete, true and correct and is accurately supported and documented by any laboratory testing as required by Envirocare of Utah, Inc. The results of any said testing have been submitted to Envirocare of Utah, Inc.

Generator's Signature _____ Title _____ Date _____

(Sign for the above certifications. Please initial each page.)

ENVIROCARE
OF UTAH, INC.

Mixed Waste Profile Record - (EC-0175)-2

7. HAZARDOUS WASTE DETERMINATION, DESCRIPTION AND CHECKLIST. (Please complete the following checklist. Attach additional sheets if necessary):

a. _____ Briefly describe the waste in the space below. Include a description of the process in which it was generated.

b. _____ List the chemicals and materials used in or commingled with the waste.

c. _____ List all of the EPA Hazardous Waste Numbers for the waste.

d. _____ Describe all hazardous waste characteristics and listed hazardous waste constituents applicable to the waste.

e. _____ Attach the most recent analytical results which show that the waste is hazardous. Also attach any additional results describing the composition of the waste. Include results for all listed constituents and characteristics for which the waste is hazardous.

f. _____ Where the determination that the waste is hazardous is based on knowledge of the waste, describe the basis of the determination and attach all information for which the determination is based.

g. _____ Describe any applicable land-disposal prohibition extensions, exemptions, effective dates, delistings, and treatment standards or methods for the waste.

h. _____ Attach any Material Safety Data Sheets for the hazardous materials from which the waste is derived.

i. _____ Where a category on this Waste Profile Record does not apply, describe below why it does not.

EPA Hazardous Waste Number(s) _____

Description of the Waste: _____

_____

_____

_____

_____

_____

_____

_____

_____

_____

8. HISTORY OF WASTE SINCE GENERATION. Please circle the appropriate answers. If a "Y" (yes) is circled, please describe in 7 above or on an attached sheet.

A. Y N Was this waste mixed, treated, neutralized, solidified, commingled, dried, or otherwise processed upon generation or at any time thereafter?

B. Y N Has this waste been transported or otherwise removed from the location or site where it was originally generated?

C. Y N Was this waste derived from (or is the waste a residue of) the treatment, storage, and/or disposal of hazardous waste defined by 40 CFR 261?

INITIALS _____

ENVIROCARE
OF UTAH, INC.

Mixed Waste Profile Record - (EC-0175)-3

9. LIST ALL KNOWN AND POSSIBLE CHEMICAL COMPONENTS OR HAZARDOUS WASTE CHARACTERISTICS

	(Y)	(N)		(Y)	(N)		(Y)	(N)
a. Listed HW	____	____	b. "Derived-From" HW	____	____	c. Toxic	____	____
d. Cyanides	____	____	e. Sulfides	____	____	f. Dioxins	____	____
g. Pesticides	____	____	h. Herbicides	____	____	i. PCBs	____	____
j. Explosives	____	____	k. Pyrophorics	____	____	l. Solvents	____	____
m. Organics	____	____	n. Phenolics	____	____	o. Infectious	____	____
p. Ignitable	____	____	q. Corrosive	____	____	r. Reactive	____	____
s. Antimony	____	____	t. Beryllium	____	____	u. Copper	____	____
v. Nickel	____	____	w. Thallium	____	____	x. Vanadium	____	____
y. Alcohols	____	____	z. Arsenic	____	____	aa. Barium	____	____
bb. Cadmium	____	____	cc. Chromium	____	____	dd. Lead	____	____
ee. Mercury	____	____	ff. Selenium	____	____	gg. Silver	____	____

hh. Other Known or Possible Materials or Chemicals _____

10. **REQUIRED CHEMICAL LABORATORY ANALYSIS CHECKLIST.** Generator must submit results of analyses of samples of the waste. Results are required from a qualified laboratory for the following analytical parameters unless nonapplicability of the analysis for the waste can be stated and justified in attached statements or in 7. above. Attach all analytical results and QA/QC documentation. **(CAUTION: PRIOR TO ARRANGING FOR LABORATORY ANALYSES, REFER TO 18 REGARDING UTAH-CERTIFIED AND EPA CLP LABORATORIES.)**

_____ A. Soil pH and Paint Filter Liquids Test, SW-846 Methods 9045 and 9095, respectively. (If the waste is a indeed a dry solid as described in 7., then the requirement for the Method 9095 may be waived by the generator.)

_____ B. Test Method (from SW-846 Chapter 7) to Determine Hydrogen Cyanide Released from Wastes.

_____ C. Test Method (from SW-846 Chapter 7) to Determine Hydrogen Sulfide Released from Wastes.

_____ D. **HEAVY METALS ANALYSIS.** Provide documentation of knowledge, determinations and descriptions or analytical results which address:

_____ (1) Whether the waste would pass or fail the TCLP for the eight heavy metal constituents based on the method in Appendix I of 40 CFR 268. The eight metals are listed below:

Arsenic (As)	Barium (Ba)	Cadmium (Cd)	Chromium (Cr)
Lead (Pb)	Mercury (Hg)	Selenium (Se)	Silver (Ag)

INITIALS _____

D. HEAVY METALS ANALYSIS (continued)

_____ (2) Whether the waste meets the applicable treatment standards for metals based on the applicable standards referenced below:

(a) the concentration of the metal constituents in the waste itself as required by Table CCW, 40 CFR 268.42.

(b) the concentration of the metal constituents based on an extract of the waste as required by Table CCWE, 268.41.

_____ E. VOLATILE AND SEMI-VOLATILE ORGANIC CHEMICAL ANALYSES.

When your waste arrives at Envirocare, it may be analyzed for SW-846 Methods 8240 and 8270 and for tentatively identified chemicals. Should the result of this analysis indicate that hazardous wastes were not previously identified, your waste may be rejected and returned.

Provide documentation of knowledge, determinations and descriptions or analytical results which address:

_____ (1) Whether the waste would pass or fail the TCLP for the 32 organic chemical constituents based on the method in Appendix I of 40 CFR 268. These chemical constituents are listed below:

Benzene	1,1-Dichloroethylene	Lindane (delta-BHC)	Pyridine
Carbon Tetrachloride	2,4-Dinitrotoluene	m-Cresol	Tetrachloroethylene
Chlordane	2,4-D (2,4-Dichlorophenoxyacetic Acid)	Methoxychlor	Toxaphene
Chlorobenzene	Endrin	Methyl Ethyl Ketone	Trichloroethylene
Chloroform	Heptachlor (and hydroxide)	Nitrobenzene	2,4,5-TP (Silvex)
Cresols	Hexachlorobenzene	o-Cresol	2,4,5-Trichlorophenol
1,4-Dichlorobenzene	Hexachlorobutadiene	p-Cresol	2,4,6-Trichlorophenol
1,2-Dichloroethane	Hexachloroethane	Pentachlorophenol	Vinyl Chloride

_____ (2) Whether the waste meets the applicable treatment standards for volatile and semi-volatile constituents based on the applicable standards referenced below:

(a) the concentration of the constituents in the waste itself as required by Table CCW, 40 CFR 268.42, or

(b) the concentration of the constituents based on an extract of the waste as required by Table CCWE, 40 CFR 268.41.

_____ (3) Whether the concentration of HOC constituents based on the waste itself exceeds allowable levels. (See No. 17 for a list of HOC chemicals.) The results of an adaptation of Method 9020 (Total Organic Halides) for solids may be used to satisfy this requirement. Use acetone/hexane in a 1:1 ratio to extract TOX chemicals from the solids prior to extract analysis.

(Note: For solid-phase wastes, the greater-than-1,000-ppm HOC California List Waste Land Disposal Prohibition applies to HOC-containing wastes identified as hazardous by a characteristic property which does not involve the HOCs. Therefore, ignitable-, corrosive-, and/or reactive-only wastes containing greater-than-1,000-ppm HOCs are subject to the prohibition. The prohibition also applies to wastes that are subject to a national capacity variance.)

11. SAMPLE OF WASTE TO ENVIROCARE.

_____ Please send 5 representative samples of your waste to Envirocare. These samples will be used to establish the waste's incoming shipment acceptance parameter tolerances and may be analyzed for additional parameters. Send at least 1-kg. (2-lb.) for each sample in an air-tight clean glass container via UPS (United Parcel Post) to:

Envirocare of Utah, Inc.
Attn: Sample Control
Tooele County USI-80 Exit 49
Clive, Utah 84029

INITIALS _____

12. OTHER REQUIRED ANALYSES BASED ON THE RESPONSES AND RESULTS IN 9 AND 10. For the results of analyses in 10. and for some items in 9. marked "(Y)", the additional analyses or descriptions are required as noted:

	ITEM IN 9 OR 10	ADDITIONAL REQUIRED DESCRIPTIONS OR ANALYSIS
_____ A.	9a, 9b, 9c, 9l, 9m, 9n, 9y, 9hh	For the listed, derived, toxic, solvent, organic, phenolic, or alcohol-containing wastes listed to the left, additional descriptions or results of analytical methods may be required including some of the following methods: Method 8000 Gas Chromatography Method 8010 Halogenated Volatile Organics Method 8015 Nonhalogenated Volatile Organics Method 8020 Aromatic Volatile Organics Method 8030 Acrolein, Acrylonitrile, Acetonitrile Method 8040 Phenols Method 8060 Phthalate Esters Method 8080 Organochlorine Pesticides and PCBs Method 8090 Nitroaromatics and Cyclic Ketones Method 8100 Polynuclear Aromatic Hydrocarbons Method 8120 Chlorinated Hydrocarbons Method 8150 Chlorinated Herbicides
_____ B.	9f	For dioxin-related wastes, provide the results of SW-846 Method 8280 -- The Analysis of Polychlorinated Dibenzo-p-Dioxins and Polychlorinated Dibenzofurans.
_____ C.	9g, 9h	The method in 40 CFR 268 Appendix I for the herbicides and pesticides unless the results are already provided in 10.E.(1).
_____ D.	9g, 9i	SW-846 Method 8080 -- Organochlorine Pesticides and PCBs unless the results are already provided from 10.E.
_____ E.	9d, 10B	SW-846 Method 9010 or 9012 (adapted for solids as applicable) -- Total and Amenable Cyanide. This method is required when 9d is checked (Y) or when the result in 10 B is greater than 20 mg/kg.

13. ANALYTICAL RESULTS FOR REQUIRED PARAMETERS:

Soil pH _____

Paint Filter Liquids Test _____ (Pass/Fail)

Cyanide Released _____ mg/kg

Sulfide Released _____ mg/kg

14. ANALYTICAL RESULTS FOR CHARACTERISTIC HEAVY METALS. Indicate Total Metals concentrations in mg/kg or ppm. Indicate Toxicity Characteristic Leaching Procedure (TCLP) concentrations in mg/liter.

Arsenic	_____ (Total)	_____ (TCLP)	Lead	_____ (Total)	_____ (TCLP)
Barium	_____ (Total)	_____ (TCLP)	Mercury	_____ (Total)	_____ (TCLP)
Cadmium	_____ (Total)	_____ (TCLP)	Selenium	_____ (Total)	_____ (TCLP)
Chromium	_____ (Total)	_____ (TCLP)	Silver	_____ (Total)	_____ (TCLP)

INITIALS _____

ENVIROCARE
OF UTAH, INC.

Mixed Waste Profile Record - (EC-0175)-6

15. HAZARDOUS WASTE TREATMENT STANDARDS. List each of the waste's EPA Hazardous Waste Numbers in the description in 7 and below. Provide below additional information with respect to the waste's subcategory (e.g. low mercury subcategory), treatability group (e.g. non-wastewaters), treatment standards and concentration or technology (e.g. 5.6 mg/l arsenic in extract or INCIN [incineration]), and any applicable exemptions (e.g. exclusion for geothermal waste, 40 CFR 261.4[b][5]; variance until May 8, 1992 for soil with treatment standard based on incineration, 40 CFR 268.35[e]). If additional space is needed, copy this page prior to completing and attach completed copies with this profile record.

EPA HW Number	Subcategory	Treatability Group	Treatment Standard(s) and Concentrations or Technology	Any Exemptions, Variances, Extensions or Exclusions (List 40 CFR reference)
				[Y N]
				[Y N]
				[Y N]
				[Y N]
				[Y N]
				[Y N]
				[Y N]
				[Y N]
				[Y N]
				[Y N]
				[Y N]
				[Y N]
				[Y N]
				[Y N]
				[Y N]
				[Y N]

16. GENERATOR'S RESPONSIBILITY TO DETERMINE HAZARDOUS WASTE NUMBERS AND TREATMENT STANDARDS.

a. **Generators Determine Whether a Waste is Hazardous.** The requirements of 40 CFR 262.11 state that it is the generator's responsibility to determine whether his(her) waste is hazardous. This determination must be made by the generator.

b. **Certification by Generator Must Accompany Waste Shipment(s).** As required by 40 CFR 268, all restricted wastes received at Envirocare must be accompanied by a notice and/or certification from the generator stating that the waste meets the applicable land disposal treatment standards. Envirocare will rely on the certification(s).

c. **Generator's Waste may be Sampled at the Disposal Facility by Envirocare or by Environmental Regulators.** Should the results of subsequent analysis of a waste show that the waste is hazardous for additional EPA hazardous waste numbers and corresponding treatment standards which were not identified by the generator, then the waste may be removed, refused, and may be returned to the generator pursuant to the terms of the disposal agreement.

d. **Envirocare Accepts Waste According to a Waste Analysis Plan.** Envirocare does not assume or accept any responsibility imposed on the generator by law or the disposal agreement.

INITIALS _____

ENVIROCARE
OF UTAH, INC.

Mixed Waste Profile Record - (EC-0175)-7

17. LIST OF HALOGENATED ORGANIC COMPOUNDS (HOCs) BY METHOD. The HOCs listed in 40 CFR 268 Appendix III are listed below by analyte for SW-846 Methods 8240 and 8270. The aggregate concentration for HOCs is obtained by summing the total of results from all of the following chemicals:

The following HOC analytes are already included in Method 8240, SW-846, Third Edition:

Bromodichloromethane
Bromomethane
Carbon Tetrachloride
Chlorobenzene
Chlorodibromomethane
Chloroethane
Chloroform
Chloromethane
2-Chloroethyl Vinyl Ether
cis-1,3-Dichloropropene
Dibromomethane
Dichlorodifluoromethane
1,1-Dichloroethane
1,2-Dichloroethane
1,2-Dichloropropane
Iodomethane
Methylene Chloride
1,1,2,2-Tetrachloroethane
Tetrachloroethene
trans-1,2-Dichloroethane
trans-1,3-Dichloropropene
1,1,1-Trichloroethane
1,1,2-Trichloroethene
Trichlorofluoromethane
1,2,3-Trichloropropane
Vinyl Chloride

These additional HOCs may be analyzed using the December 1987 revision of 8240:

1,2-Dibromo-3-Chloropropane
3-Chloropropionitrile
1,2-Dibromoethane
trans-1,4-Dichloro-2-Butene
Pentachloroethane
1,1,1,2-Tetrachloroethane

The following HOC analytes are already included in Methods 8270:

Aldrin
alpha-BHC
Aroclor-1016
Aroclor-1221
Aroclor-1232
Aroclor-1242
Aroclor-1248
Aroclor-1254
Aroclor-1260
beta-BHC
Bis(2-Chloroethyl) Ether
Bis(2-Chloroisopropyl) Ether
Chlordane
4-Chloroaniline
4-Chloro-3-Methylphenol
2-Chloronaphthalene
2-Chlorophenol
4,4'-DDD
4,4'-DDE
4,4'-DDT
delta-BHC
1,2-Dichlorobenzene
1,3-Dichlorobenzene
1,4-Dichlorobenzene
3,3'-Dichlorobenzidine
2,4-Dichlorphenol
2,6-Dichlorphenol
Dieldrin
Endosulfan II
Endosulfan I
Endrin
Endrin Aldehyde
Heptachlor Epoxide
Heptachlor
Hexachlorobenzene
Hexachlorobutadiene
Hexachlorocyclopentadiene
Hexachloroethane
Methoxychlor
Pentachlorobenzene
Pentachloronitrobenzene
Pentachlorophenol
Pronamide
2,3,4,6-Tetrachlorophenol
Toxaphene
1,2,4-Trichlorobenzene
1,2,4,5-Tetrachlorobenzene
2,4,5-Trichlorophenol
2,4,6-Trichlorophenol

These additional HOCs may be analyzed using the December 1987 revision of 8270:

Chlorobenzilate
Hexachlorophene
Hexachloropropene
Isodrin
Kepone
PCBs n.o.s.
Tris(2,3-Dibromopropyl) Phosphate

The concentrations of the following HOCs must also be determined by adapting SW-846 Methods 8240 or 8270 or by using another SW-846 Method:

2-Chloro-1,3-Butadiene
Bis(2-Chloroethoxy) Ethane
3-Chloropropene
2,4-Dichlorophenoxyacetic Acid
Hexachlorodibenzofuran
Hexachlorodibenzo-p-dioxins
Pentachlorodibenzofuran
Pentachlorodibenzo-p-dioxins
2,4,5-T
Tetrachlorodibenzofuran
Tetrachlorodibenzo-p-dioxins
2,3,7,8-Tetrachlorodibenzo-p-dioxin
2,4,5-TP Silvex

18. QUALIFIED ANALYTICAL DATA FOR COMPLETING THIS FORM. Generator is cautioned as follows:

a. **Utah Certified or EPA CLP Laboratories.** During the process of appealing a notice of violation or other enforcement actions, the Utah Division of Environmental Health will not admit laboratory data which is not from a either a Utah-certified or EPA CLP (contract laboratory program) laboratory. Utah certification is obtained through the Utah Bureau of Laboratory Improvement [801] 584-8400.

b. **Utah Certification is Parameter-Specific.** Laboratories are certified by parameter. One should not assume that every result from a "Utah-certified" laboratory is acceptable for a compliance appeal. A laboratory may certify for some parameters and not for others. It is a good practice to check with a laboratory to ensure parameter certification. A laboratory's certification is dynamic. A laboratory may lose certification or may not renew their certification for parameters from one compliance period to the next.

c. **CLP QA/QC Documentation Required from EPA CLP Laboratories.** When a generator wishes to use an EPA CLP laboratory to obtain admissable data, documentation for the CLP quality assurance and quality control (QA/QC) is required with the results. When sending CLP laboratory data to Envirocare, enclose a copy of the QA/QC documentation package with this profile record.

d. **Approved Sampling.** For all sampling, the analytical method's sampling procedures must be followed.

INITIALS _____

19. Additional and Updated Requirements for Form EC-0175:

A) A Total Organic Halides (TOX) result <u>must</u> be provided. Use SW-846 Method 9020 or 9022.

B) Results from a Utah-certified laboratory <u>must</u> be included unless:

- The laboratory results have been provided as part of a U.S. Environmental Protection Agency project

-- OR --

- If the analyses were performed prior to discussions of disposal with Envirocare of Utah, Inc., the data may be acceptable under the following restrictions:

  * The quality control samples for the sample set were also performed on the same sample.

  * The results include acceptable ranges and must clearly show that the data was in control.

  * Quality control samples include all those required by SW-846 or other methods approved by the U.S. EPA.

APPENDIX III

Analytical Methods, QA/QC Procedures for Sludge Samples

LA-10300-M, Vol. II
Manual

Health and Environmental Chemistry: Analytical Techniques, Data Management, and Quality Assurance

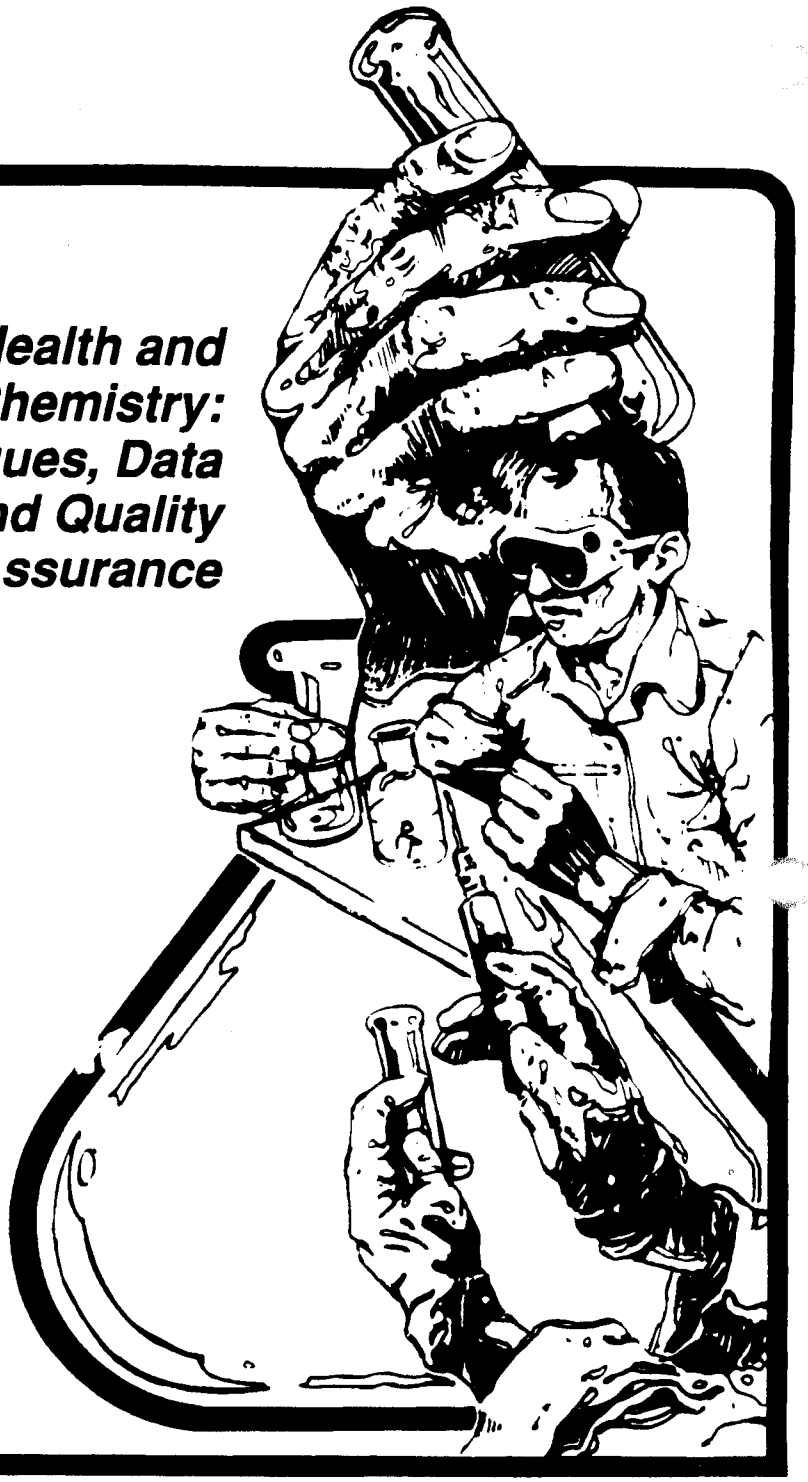

Upon termination or transfer of manual holder, this manual shall be returned to the Quality Asssurance Section.

Controlled Copy No. 15

Los Alamos National Laboratory is operated by the University of California for the United States Department of Energy under contract W-7405-ENG-36.

Los Alamos
NATIONAL LABORATORY

Los Alamos, New Mexico 87545

APPENDIX III
Analytical Methods, QA/QC Procedures for Sludge Samples

Introduction

The dewatered sludges generated by the TA 50-1 RLWTF have been analyzed historically for radioisotopes and for metals potentially subject to regulation by the RCRA/NMHWA (and, more recently, for volatile and semivolatile organic compounds as well), as discussed in Appendix I to this letter. Analyses were and are performed by on-site laboratories, managed and operated by LANL's then-Health and Environmental Chemistry Group (HSE-9), now known as the Inorganic Trace Analysis Group (CST-9). Throughout the period of concern (late 1988 through early 1993) their analyses have been performed in accordance with the quality assurance/quality control (QA/QC) and analytical procedures attached as Sections IIIa and IIIb of this Appendix, respectively. Note that the analytical procedures in Section IIIb themselves include QA/QC requirements and protocols in most cases, and that these governed LANL's analytical quality assurance prior to the evolution of a formal Quality Assurance Program Plan. Also included in Section IIIb are excerpts from LANL's Annual Environmental Surveillance reports for calendar years 1988 through 1993, providing additional descriptions of the use of these analytical protocols.

Historically, RLWTF sludge sampling was performed for the primary purpose of assessing and monitoring RLWTF performance and efficiency in removing radionuclides from the effluent wastewater prior to discharge to the environment, not for the primary purpose of regulatory compliance monitoring. At the time, there was no specific regulatory driver for the sludge analyses, in part because of operator knowledge and the increasingly stringent controls being placed on acceptance of waste materials in the influent stream. Only internal RLWTF operational requirements mandated the sludge analyses, but they had the additional benefit of providing a check that no RCRA/HWA characteristic wastes were in the sludge stream.

Procedural and quality assurance requirements for analytical chemistry at LANL have been continuously evolving since 1988, as have the analytical methods themselves. Increasingly stringent QA requirements have been imposed on individual analyses over time, as indicated by the evolution of the documentation provided in Section IIIb of this Appendix, which provides versions of the procedures governing each analytical method used for the sludges over the 1988-1993 period of concern. Where the method or the procedure document changed, both the earlier (retired) document and the more recent document are provided.

The analysis of replicate samples provided the primary sample-by-sample quality assurance check during the earlier (1988-1990) time period in particular. Note that two results are reported for each analyte in Appendix II; these are the results of analyzing two splits from each sample number reported therein. In addition, the results of performance evaluations of the analytical laboratory during the period of the analyses (Section IIIc of

As discussed in the enclosed LANL procedures (Section IIIb of this Appendix), the following EPA methods were the primary basis for the corresponding LANL procedures:

- Method 1310A, *Extraction Procedure (EP) Toxicity Test Method and Structural Integrity Test*, Revision 1 (November 1990)

- Method 1311, *Toxicity Characteristic Leaching Procedure*, Revision 0 (November 1990)

- Method 3010A, *Acid Digestion of Aqueous Samples and Extracts for Total Metals for Analysis by FLAA or ICP Spectroscopy*, Revision 1 (November 1990)

- Method 3020A, *Acid Digestion of Aqueous Samples and Extracts for Total Metals for Analysis by GFAA Spectroscopy*, Revision 1 (November 1990)

- Method 6010A, *Inductively Coupled Plasma Atomic Emission Spectroscopy*, Revision 1 (November 1990)

- Method 6020, *Inductively Coupled Plasma - Mass Spectrometry*, Revision 0 (September 1994)

APPENDIX III
Section IIIa

Laboratory Quality Assurance Program Plan
Revision 1, April 1, 1991

CONTROLLED

LABORATORY QUALITY ASSURANCE PROGRAM PLAN

HEALTH AND ENVIRONMENTAL CHEMISTRY

LOS ALAMOS NATIONAL LABORATORY

LOS ALAMOS, NEW MEXICO 87545

Compiled by

Ernest S. Gladney

Margaret A. Gautier

CONTROLLED

TABLE OF CONTENTS

Cross-Reference Matrix for External QA Documents 5

Terms and Definitions 7

0. Introduction 13

1. Organization 17

2. Quality Assurance Program 23

3. Design Control 29

4. Procurement Document Control 31

5. Instructions, Procedures, Plans, and Drawings 33

6. Document Control 37

7. Control of Purchased Items and Services 39

8. Identification and Control of Items and Samples 41

9. Control of Analytical Procedures (Processes) 43

10. Inspection 45

11. Test Control 49

12. Control of Measuring and Test Equipment 51

13. Handling, Storage, and Shipping 53

14. Inspection, Test, and Operating Status 55

15. Control of Nonconforming Items 57

16. Corrective Action 59

17. Records 61

18. Audits 63

19. Software Quality Assurance 65

20. Quality Improvement 69

CROSS-REFERENCE MATRIX FOR EXTERNAL QA DOCUMENTS

TITLE	HSE-9	LANL QA Man. Date 08/91	NQA-1	QAMS-004	QAMS-005	DOE 5700.6C	DOE 1330
Introduction	0	None	None	1.0,2.0	5.1,5.2	None	None
Organization	1	1	1	1.0,4.1	5.4	1	None
Quality Assurance Program	2	1,2	2	3.0,4.2,4.3 4.5,5.0,9.0	5.4,5.11 5.16	1,2	None
Design Control	3	6	3	None	5.3,5.5	6	None
Procurement Document Control	4	7	4	4.4	None	7	None
Instructions, Procedures, Plans, and Drawings	5	4	5	6.0	5.6,6	4	None
Document Control	6	4	6	4.4	5.6,3.1	4	None
Control of Purchased Items and Services	7	7	7	6.0	None	7	None
Identification and Control of Items and Samples	8	5,7	8	6.0,7.1	5.7	5	None
Control of Analytical Procedures (Processes)	9	5,6	9	7.0	5.9,5.11,5.14	5	None
Inspection	10	8	10	6.0	5.11	8	None

SUPERSEDED

CROSS-REFERENCE MATRIX FOR EXTERNAL QA DOCUMENTS (cont)

TITLE	HSE-9	LANL QA Man. Date 08/91	NQA-1	QAMS-004	QAMS-005	DOE 5700.6C	DOE 1330
Test Control	11	6,8	11	None	5.9,5.14	8	None
Control of Measuring and Test Equipment	12	5,6	12	6.0	5.8,5.13	5	None
Handling, Storage, and Shipping	13	5	13	7.1	5.6	5	None
Inspection, Test, and Operating Status	14	5	14	6.0	None	5	None
Control of Nonconforming Items	15	3	15	6.0	5.15	3	None
Corrective Action	16	1,3	16	10.0	5.15	3	None
Records	17	4	17	4.4,8.0	5.10	4	None
Audits	18	10	18	4.5	5.12,5.16	10	None
Software Quality Assurance	19	6	3	None	None	None	Entire Order
Quality Improvement	20	3	None	None	None	None	None

TERMS AND DEFINITIONS

Acceptance Criteria. Specified limits placed on characteristics of an item, process, or service defined in codes, standards, or other requirement documents.

Audit. A planned and documented activity performed to determine by investigation, examination, or evaluation of objective evidence the adequacy of and compliance with established procedures, instructions, drawings, and other applicable documents, and the effectiveness of implementation. An audit should not be confused with surveillance or inspection activities performed for the sole purpose of process control or product acceptance.

External Audit. An audit of those portions of another organization's quality assurance program not under the direct control or within the organizational structure of the auditing organization.

Internal Audit. An audit of those portions of an organization's quality assurance program retained under its direct control and within its organizational structure.

Certification. The act of determining, verifying, and attesting in writing to the qualifications of personnel, processes, procedures, or items in accordance with specified requirements.

Commercial Grade Item. An item satisfying the following criteria:

(a) not subject to design or specification requirements that are unique to nuclear facilities;
(b) used in applications other than nuclear facilities; and
(c) is to be ordered from the manufacturer/supplier on the basis of specifications set forth in the manufacturer's published product description (for example, catalog).

Computer Software. A sequence of instructions suitable for processing by a computer. Processing may include the use of an assembler, a compiler, an interpreter, or a translator to prepare the program for execution as well as to execute it.

Condition Adverse to Quality. An all-inclusive term used in reference to any of the following: failures, malfunctions, deficiencies, defective items, and nonconformances. A significant condition adverse to quality is one which, if uncorrected, could have a serious effect on safety or operability.

Corrective Action. Measures taken to rectify conditions adverse to quality and, where necessary, to preclude repetition.

Data Quality. All features and characteristics of data that bear on its ability to satisfy a given purpose. The characteristics of major importance are accuracy, precision, completeness, representativeness, and comparability. The characteristics are defined as follows:

Accuracy. The degree of agreement of a measurement (or an average of measurements of the same thing), X, with an accepted reference or true value, T, usually expressed as the difference between the two values, X-T, or the difference as a percentage of the reference or true value, 100 (X-T)/T, and sometimes expressed as a ratio, X/T. Accuracy is a measure of the bias in a system.

Precision. A measure of mutual agreement among individual measurements of the same property, usually under prescribed similar conditions. Precision is best expressed in terms of the standard deviation. Various measures of precision exist depending upon the "prescribed similar conditions."

Completeness. A measure of the amount of valid data obtained from a measurement system compared to the amount that was expected to be obtained under correct normal conditions.

Representativeness. The degree to which data accurately and precisely represent a characteristic of a population, parameter variations at a sampling point, a process condition, or an environmental condition.

Comparability. The confidence with which one data set can be compared to another.

Data Quality Objectives (DQO). A quantitative mechanism to help obtain environmental data of known and documented quality. These are established and documented for each project before any field work begins, to help ensure that adequate measurement data are obtained. The DQO's describe the uncertainties that the requestor/decision maker is willing to accept in results derived from environmental data. This uncertainty is used to specify the quality of measurement data required, usually in terms of precision, accuracy, representativeness, comparability, and completeness. Both field and laboratory personnel should be aware of the DQO's so that informed decisions may be made during execution of the project to attain those DQO's.

Data Usability. A qualitative decision process whereby the decision maker evaluates the achievement of DQO's and determines whether the data may be used for the intended purposes. Three levels or classes of data quality are often used.

Valid. Data conforms to all requirements, all QC criteria are met, methods were followed, and documentation is complete.

Acceptable with Qualifications. Data conforms to most, but not all, requirements, critical QC criteria are met, methods were followed or had only minor deviations, and critical documentation is complete.

Rejected. Data do not conform to some or all requirements, critical QC criteria are not met, methods were not followed or had significant deviations, and critical documentation is incomplete.

Data Validation. A systematic process for reviewing a body of data against a set of criteria to provide assurance that the data are adequate for their intended use. Data validation consists of data editing, screening, checking, auditing, verification, certification, and review.

Deviation. A departure from specified requirements.

Document. Any written or pictorial information describing, defining, specifying, reporting, or certifying activities, requirements, procedures, or results. A document is not considered to be a Quality Assurance Record until it satisfies the definition of a Quality Assurance Record as defined in this Supplement.

Guideline. A suggested practice that is not mandatory in programs intended to comply with a standard. The word ***should*** denotes a guideline; the word ***shall*** denotes a requirement.

Inspector. A person who performs inspection activities to verify conformance to specific requirements.

Inspection. Examination or measurement to verify whether an item or activity conforms to specified requirements.

Item. An all-inclusive term used in place of any of the following: assembly, component, equipment, material, module, part, structure, subassembly, subsytem, system, or unit.

Measuring and Test Equipment (M & TE). Devices of systems used to calibrate, measure, gage, test, or inspect in order to control or acquire data to verify conformance to specified requirements.

Nonconformance. A deficiency in characteristic, documentation, or procedure that renders the quality of an item or activity unacceptable or indeterminate.

Procedure. A document that specifies or describes how an activity is to be performed.

Procurement Document. Purchase requisitions, purchase orders, drawings, contracts, specifications, or instructions used to define requirements for purchase.

Purchaser. The organization responsible for establishment of procurement requirements and for issuance and/or administration, or procurement documents.

Qualification (Personnel). The characteristics or abilities gained through education, training, or experience, as measured against established requirements, such as standards or tests, that qualify an individual to perform a required function.

Qualified Procedures. An approved procedure that has been demonstrated to meet the specified requirements for its intended purpose.

Quality Assurance. The total integrated program of planned and systematic actions necessary to provide confidence in and assure the reliability of each analytical result or measurement reported by a laboratory.

Quality Assurance Program Plan. An orderly assemblage of management policies, objectives, principles, and general procedures by which an agency or laboratory outlines how it intends to produce data of known and accepted quality.

Quality Assurance Project Plan. An orderly assembly of detailed and specific procedures which delineates how data of known and accepted quality is produced for a specific project. (A given agency or laboratory would have only one quality assurance program plan, but would have a quality assurance project plan for each of its projects.)

Quality Assurance Record. A completed document that furnishes evidence of the quality of items and/or activities affecting quality.

Quality Control. Actions taken within a QA program to ensure validity of results. As used in this document, QC means all routine activities and checks, such as calibration of equipment, duplicate analyses, use of certified reagents, use of spiked samples etc., included in normal internal procedures to control the accuracy and precision of a measurement process.

Receiving. Taking delivery of an item at a designated location.

Repair. The process of restoring a nonconforming characteristic to a condition such that the capability of an item to function reliably and safely is unimpaired, even though that item still does not conform to the original requirement.

Right of Access. The right of a Purchaser or designated representative to enter the premises of a Supplier for the purpose of inspection, surveillance, or quality assurance audit.

Service. The performance of activities such as design, fabrication, inspection, nondestructive examination, repair, or installation.

Special Process. A process, the results of which are highly dependent on the control of the process or the skill of the operators, or both, and in which the specified quality cannot be readily determined by inspection or test of the product.

Supplier. Any individual or organization who furnishes items or services in accordance with a procurement document. An all-inclusive term used in place of any of the following: vendor, seller, contractor, subcontractor, fabricator, consultant, and their subtier levels.

Surveillance. The act of monitoring or observing to verify whether an item or activity conforms to specified requirements.

CONTROLLED

Testing. An element of verification for the determination of the capability of an item to meet specified requirements by subjecting the item to a set of physical, chemical, environmental, or operating conditions.

Traceability. The ability to trace the history, application, or location of an item and like items or activities by means of recorded identification.

Vendor. See Supplier.

Verification. The act of reviewing, inspecting, testing, checking, auditing, or otherwise determining and documenting whether items, processes, services, or documents conform to specified requirements.

0. INTRODUCTION

The analytical chemistry activities in HSE-9 are diverse and encompass industrial hygiene, environmental surveillance and compliance, bioassay, NPDES compliance and process analysis, and U.S. Transuranium Registry tissue studies. This Laboratory Quality Assurance Program Plan supersedes the "Quality Assurance for Health and Environmental Chemistry" series of Los Alamos National Laboratory annual reports that has provided the basis for our quality assurance program in the past. This annual series of reports will continue as our documentation of overall analytical performance.

Laboratory quality assurance plans by themselves are no guarantee of excellence. Group HSE-9's status as a nationally recognized source of analytical chemical expertise is largely due to the caliber of its staff which, for over 45 years has endeavored to provide Los Alamos with consistent excellence in health and environmental analyses. Although HSE-9 began as an independent group in 1984, the analytical organizations which combined to form this new activity have their roots in the original Health Division (H) and date back to 1944. All conscientious employees and organizations use systematic methods to assure the continuing quality of their work. A laboratory quality assurance plan is simply a written description of these methods.

There are a number of advantages to documenting a quality system. A written plan, along with appropriate supporting procedures, makes it less likely that actions that are known to be essential to superior performance will be neglected through oversight or the ever-present pressures of cost, time, and schedule. A laboratory quality assurance plan makes clear to all members of HSE-9 the standards that the Group intends to maintain, and provides for continuity in maintaining those standards as the membership of the Group changes. Because the plans are periodically reviewed, the group can regularly evaluate the effectiveness of its quality activities, eliminate ineffective procedures, and consider the advisability of any new measures. Finally, a laboratory quality assurance plan provides documented evidence of our commitment to excellence in all facets of our analytical work. Successful implementation depends on the cooperation and support from all levels of management and staff. In the end, an effective quality assurance program will enhance confidence in our work — for ourselves, for the internal and external organizations that support us, and for the public.

Section 3 of the Los Alamos National Laboratory Quality Program Plan provides the basis and format for the HSE-9 Laboratory Quality Program Plan: "Because Laboratory activities are so diverse, providing a single set of criteria for all quality program plans is neither feasible nor desirable..... Some Laboratory programs operate under stringent constraints imposed by sponsors or federal regulatory agencies; these constraints effectively dictate the criteria for the quality program plan..... Because NQA-1 is the standard preferred by DOE, it should be adopted wherever appropriate."

HSE-9 is an organization of approximately 60 individuals. The mission of Group HSE-9 is to provide qualitative and quantitative analytical data to health physicists, industrial hygienists, environmental scientists and managers, epidemiologists, waste managers, and waste treatment plant operators. These data describe concentrations of materials in samples submitted for analysis.

Incorrect results may lead to erroneous interpretation by management or operations personnel, which could adversely affect the health and safety of exposed personnel or could affect Laboratory compliance with environmental and waste disposal regulations.

One of the fundamental responsibilities of HSE-9 management is to maintain a continuing program to ensure the reliability and validity of analytical laboratory data that is fully consistent with HSE-Division and Laboratory-wide Quality Program Plans. Our Laboratory Quality Assurance Program Plan addresses the small, single investigator projects (in which one person conducts all sampling, analytical, and interpretive functions) through large-scale, facilities-monitoring programs requiring year-to-year continuity. Our policy is that a quality assurance program should apply to all aspects of sample and information management. The program should begin at the conception of a project, follow through collection and storage of samples before analysis, include all phases of chemical and physical analyses, extend through interpretation and data entry into the HSE-9 laboratory information management system (LIMS), and culminate with the final reporting and publication of results.

We use two concepts in our quality assurance program to provide confidence in each analytical result reported by our laboratory: quality control (QC), the mechanism established to control errors, and quality assessment, the system used to verify that our entire analytical process is operating within limits we consider acceptable.

We strive to include the following elements in our QC program: (1) development of and adherence to principles of good laboratory practice (e.g. 21CFR58, 40CFR792, and others), (2) consistent use of standard operating procedures, and (3) establishment of and adherence to carefully designed protocols for specific analytical processes. Consistent use of qualified personnel, reliable and well-maintained equipment, appropriate calibrations and standards, and close supervision of all operations are primary components of our QC program. Proper conception and execution of this QC program have resulted in our analytical system operating in a state of control, in which errors are within acceptable levels and are characterized statistically.

Quality assessment describes the techniques we use to assess the quality of our analytical process. We utilize a system of control charts to determine if our system is in a state of statistical control, to visualize and monitor the relative variability of repetitive data, and to assess the accuracy of our measurements by tracking results from reference materials and spiked samples. These concepts are presented as detailed procedures in Gautier and Gladney, "Health and Environmental Chemistry: Analytical Techniques, Quality Assurance, and Data Management," LA-10300-M. A complete listing of definitions of terms, acronyms, and abbreviations used in our quality assurance (QA) program are given in Appendix A of Gautier, et al., "Quality Assurance for Health and Environmental Chemistry: 1988," LA-11637-MS.

Certain agencies are attempting to legislate QA through the promulgation of analytical methods regulations, through licensing requirements for analysts, and through laboratory certification or accreditation programs. While all these mechanisms may have a role, the rapid pace of technological change in chemical instrumentation, the wide variety of sample matrices, and the broad dispersion of procedures throughout the literature makes it difficult to establish a

definitive method for any given determination that is not soon outdated. Licensing and certification address the qualifications of personnel and the adequacy of facilities on an infrequent basis at best, but they do not address the day-to-day data quality. A preferable alternative to the legislative approach to QA management is the development and implementation of a detailed, yet flexible QA program, that permits each laboratory to use its existing expertise and facilities, to employ a variety of methods in the solution of ever-changing problems, and to encourage continuing innovation and adoption of the latest technology.

The information in this section conforms to the requirements of EPA QAMS-004, sections 1.0 and 2.0, and EPA QAMS-005, sections 5.1 and 5.2.

STATEMENT OF LABORATORY POLICY

"The Los Alamos National Laboratory is committed to the highest standards of technical excellence. Well-planned programs for maintaining and improving quality and productivity are an essential element of good management. The Laboratory Quality Program Plan provides guidelines for developing documented quality programs throughout the Laboratory as appropriate to each activity. Laboratory managers will ensure that these programs are implemented. All members of the Laboratory staff are encouraged to assist in making the Laboratory's quality programs successful."

S. S. Hecker, Director 29 Mar. 1989

MESSAGE FROM THE HSE-9 GROUP LEADER

The Health and Environmental Chemistry group (HSE-9) is committed to providing all our sponsors with quality data and analytical services. One critical element in achieving this goal is a Quality Assurance Program that provides policy and guidance for conducting our activities in a planned and controlled manner, thereby permitting the verification of quality performance.

The Quality Assurance Program described in this QA Program Plan addresses the requirements that shall be applied to all service analytical chemistry as well as all research and development projects conducted by HSE-9. This QA program is a vital and effective management approach that provides QA requirements that are consistent with the end-use of the data or research findings. Flexibility is achieved through the exercise of professional judgement in application of the various requirements to each individual project or activity. Good Laboratory Practice standards shall also be maintained throughout our work.

Quality assurance is an interdisciplinary line management function. The Quality Assurance and Data Management section of HSE-9 has the responsibility for developing the Quality Assurance Program and auditing its implementation and effectiveness. This manual and associated procedures will enhance the flexibility and verification of the analytical data and services provided by HSE-9.

Craig Leasure, HSE-9 Group Leader

1. ORGANIZATION

The methods in the administrative and technical procedures meet Basic Requirement 1 and Supplement 1S-1 of ASME NQA-1-1989, EPA QAMS-004 (Section 1.0 and 4.1), and EPA-QAMS-005 (Section 5.4). The administrative procedures are listed in Appendix A of this document and the technical procedures are found in LA-10300-M. The significant features are summarized in the following paragraphs.

Organizational responsibilities and interfaces shall be documented and communication between organizations shall be controlled to assure that quality related responsibilities are clearly understood and are auditable. A formal stop work system is provided to assure that work is halted when activities are not in substantial compliance with QA Program requirements and policies, or when corrective action is not implemented in a timely manner. A stop-work request shall be issued and completion of appropriate corrective action shall be verified and documented before a stop work request is lifted.

External interfaces between HSE-9 and other HSE-Division Groups, any LANL organizations, external sponsors, and commercial vendors/suppliers shall be documented, as required, and communications between organizations shall be appropriately controlled.

RESPONSIBILITIES

Responsibilities related to the Quality Assurance Program shall be defined in the various sections of this Quality Assurance Program Plan and the accompanying administrative and analytical procedures. The significant management level responsibilities are summarized below:

HSE-9 Group Leader:

- Ultimate group-level management responsibility for the establishment and enforcement of the HSE-9 and Los Alamos National Laboratory quality assurance policy and program.
- Issue management guidelines covering responsibility and authority.
- Assure effective implementation of the quality assurance program through management assessment and system audits.
- Delegate appropriate authority and responsibility for establishing and implementing the QA program to the Group's QA Officer and other Section Leaders.
- Support and enforce stop-work requests. Concur in close-out and lifting of stop-work requests. This responsibility may not be delegated.

HSE-9 QA Officer:

- Serve as the Quality Assurance and Data Management (QADM) section leader.

- Develop, maintain, administer, and coordinate the HSE-9 QA Program as documented in the HSE-9 Laboratory QA Plan and LANL report LA-11637-MS including reviewing and approving QA procedures and concurring with all other administrative procedures for compliance with QA Program requirements.

- Interpret QA Program requirements and determine appropriate application.

- Initiate and approve revisions to the HSE-9 Quality Assurance Program Plans.

- Request and obtain, in a timely manner, corrective action for activities not in compliance with QA Program requirements.

- Issue stop-work requests on activities not in substantial compliance with QA Program requirements or activities for which corrective action is not implemented in a timely fashion.

- Close-out and lifting of stop-work requests. This responsibility may not be delegated.

- Represent HSE-9 on QA matters with customers or sponsoring agencies.

- Delegate to appropriately qualified QADM section members the responsibility for administration and coordination of specific portions of the QA program.

- Provide for audits and surveillance of the QA Program and obtain corrective action as required.

- Inform the Group Leader and/or Los Alamos National Laboratory QA Officer of quality-related problems and obtaining resolution when required.

- Identify needs for new administrative and/or technical procedure development.

HSE-9 Section Leaders:

- Assure appropriate quality in analytical and research operations under their direction.

- Assure each section's compliance with QA requirements as specified in the HSE-9 Laboratory Quality Assurance Program Plan and reference procedures.

- Assure that commitments to customers are correct, are met in a timely fashion, and that all work performed is consistent with these agreements/commitments.

- Establish, maintain, and manage technical staff, including training, qualifying, and certifying when required.

- Arrange for or request adequate facilities and equipment needed to achieve quality. objectives.

- Identify needs for and conduct development of new administrative and/or technical procedure.

- Assure that appropriate administrative and technical procedures are approved and available within their Section work areas.

- Initiate corrective action within their sections when deficiencies are noted and document the action taken.

- Assure that all of their section's analytical data and management information is entered into the HSE-9 LIMS.

HSE-9 LIMS Manager:

- Responsible for day-to-day operation of HSE-9 LIMS.

- Develop and implement information management policy and procedures, in conjunction with the Configuration Control Committee.

- Implement configuration control decisions.

- Provide overall design coordination and control for LIMS.

- Produce QA summary reports as specified by the QA Officer.

HSE-9 Configuration Control Committee:

- Provide overall software configuration control.

- Develop and implement information management policy and procedures.

HSE-9 LIMS Users Advisory Committee:

- Provide user input to information management and group-wide computing needs.

- Develop recommendations on information management priorities, policies and procedures.

HSE-9 Sample Coordination Section Leader:

- In addition to the preceding Section Leader responsibilities, monitor all external analytical contractors for compliance with contractual responsibilities and resolve all problems.

- Enter all contractor generated analytical data into the HSE-9 LIMS.
- Make commitments for analytical chemistry services through the HSE-9 Analytical Service Agreement with each customer.

HSE-9 Analysts:

- Assure appropriate quality in analytical and research operations under their direction.
- Conduct all work as specified by the appropriate administrative and technical procedures.
- Assure that they comply with QA requirements as specified in the HSE-9 Laboratory Quality Assurance Plan and reference procedures.
- Assure that their analytical commitments to customers are met in a timely fashion.
- Request adequate facilities and equipment needed to achieve quality objectives.
- Develop and write appropriate administrative and technical procedures within their areas of responsibility.
- Assure that current copies of all appropriate administrative and technical procedures are available within their work areas.
- Initiate corrective action when deficiencies are noted and document the action taken.
- Assure that all of their analytical data and management information is entered into the HSE-9 LIMS.

HSE-9 Organizational Chart

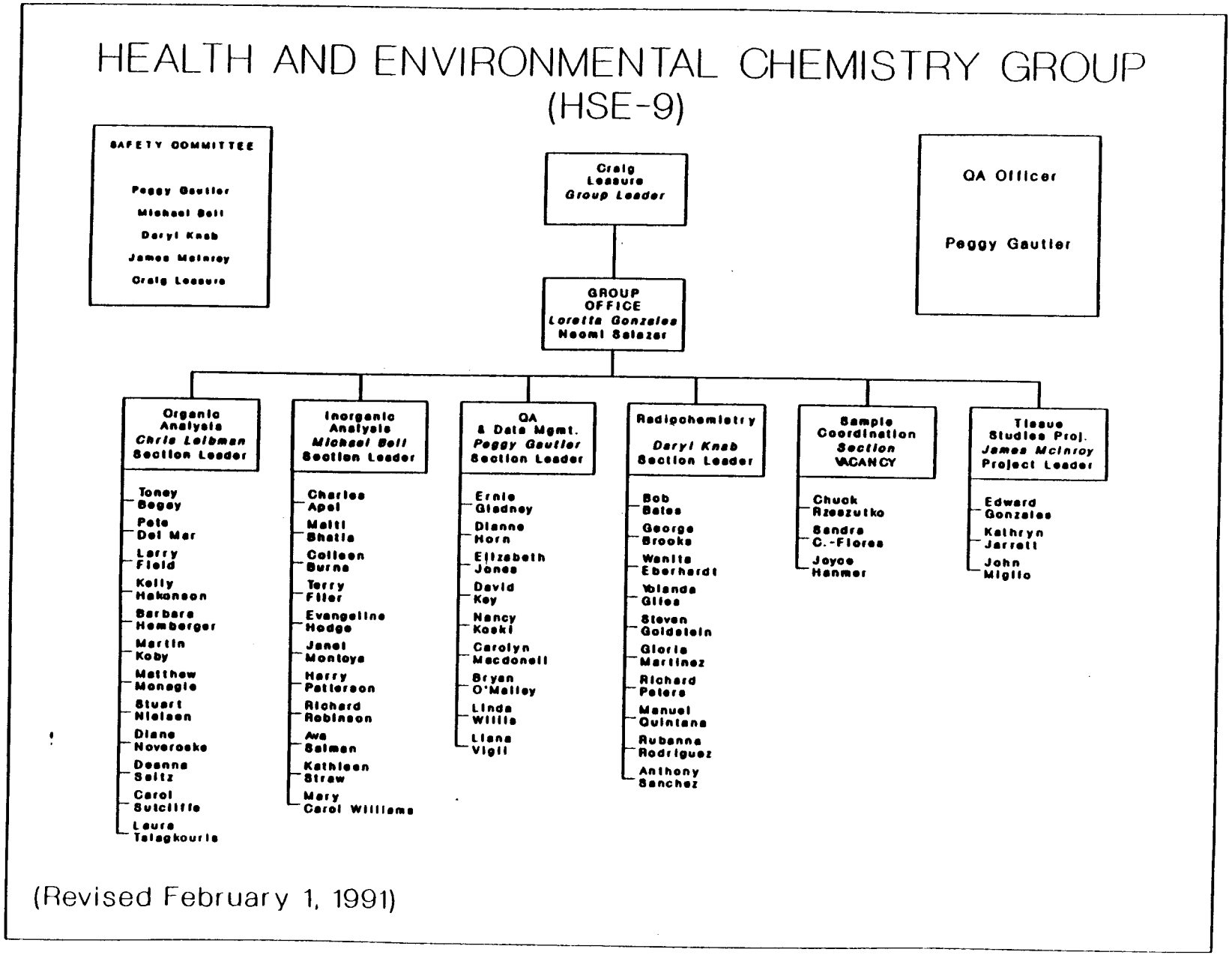

CONTROLLED

2. QUALITY ASSURANCE PROGRAM

The objective of the HSE-9 Laboratory QA program is to ensure and document that all data or research results generated by our group are scientifically valid, of known quality, and are legally defensible, where applicable. The HSE-9 QA program has been designed to meet all basic requirements and supplements of NQA-1, all sections of EPA QAMS-004, and all sections of EPA-QAMS-005. When fully implemented, the methods in the administrative and technical procedures meet Basic Requirements 2 and Supplement 2S-1 of NQA-1, EPA QAMS-004 (Section 3.0, 4.2, 4.3, 4.5, 5.0, and 9.0), and EPA QAMS-005 (Section 5.4, 5.11, and 5.16).

All measurement activities within HSE-9 shall be conducted in conformity with this Laboratory Quality Assurance Program Plan and with additional QA Project Plans, as necessary.

Project plans are used to document the requirements from HSE-9's and LANL's QAP and any additional requirements from the sponsor that apply to the work covered in that project plan. Certain actions are required before each Project Plan is closed-out to assure that outstanding QA-related action items are completed and records and analytical data are properly stored or shipped. Monitoring and assessments by management are used to assess the scope, status, and compliance to the HSE-9 and LANL QA Programs. Project plans shall be prepared in accordance with EPA QAMS-005, as required by the customer.

Our approach shall be firmly based on the concept of traceability through concurrent analysis of matrix-based certified QA materials with each batch of customer samples, to the greatest extent possible. Traceability is a hierarchial system developed largely for regulatory purposes whereby transfer of accuracy among various components or institutions of a measurement system is established. (references: Uriano & Gravatt) Another goal is to run blind QC samples with every analytical batch to the extent of 10% of the total number of samples. A batch consists of from one to twenty customer samples, blanks, duplicates, spikes, and QA/QC samples.

RESPONSIBILITIES

HSE-9 Section Leader or Project Managers:

- Implement the HSE-9 Laboratory QA Program within their organizations.
- Develop, revise, document, and implement QA Project Plans, whenever there is a significant deviation from the provisions of the HSE-9 Laboratory Quality Assurance Program Plan.
- Monitor the implementation of the overall HSE-9 Laboratory Quality Assurance Program Plan within their organizations.
- Develop and implement corrective actions plans for deficiencies noted in any QA assessment reports, close-out reports, or stop-work requests.

HSE-9 QA Officer:

- Conduct overall assessments on a periodic basis to assess the scope, status, adequacy, and compliance with the HSE-9 and LANL QA Program Plans.
- Review, approval, and audit of all QA Project Plans.
- Close-out of all QA-related aspects of the Laboratory Quality Assurance Program Plan and QA Project Plans.
- Determine need for corrective actions and assist responsible managers in developing action plans.
- Monitor and document results of corrective actions.

PROGRAM DESCRIPTION

The QA Program of HSE-9 shall provide that:

1. The QA Officer shall be the authority for all QA matters within HSE-9, and shall provide liaison with other internal and external QA organizations.
2. The QA Program shall be carried out by personnel knowledgeable in QA theory and practice, in specific areas of analytical chemistry, and in specific areas of information management.
3. Facilities, equipment, and services that impact data quality or integrity shall be routinely inspected and maintained.
4. Data generated by or for HSE-9 must meet the following requirements:
   a. Analytical methods and procedures used in measurement and monitoring efforts shall conform to the appropriate regulatory agency approved methodology when available or required. All measurement methods shall be fully documented and shall include QC procedures.
   b. Administrative Procedures, Technical Procedures, QC Procedures, and Standard Operating Procedures, approved by HSE-9 shall be developed prior to and implemented for all HSE-9 projects.
   c. Individual Project Plans shall be written as necessary or required by our customers.
   d. The intended use(s) of the data and the associated acceptance criteria for data quality shall be determined before the data collection effort begins.

e. Reported data shall include, where appropriate and possible, statements of precision and accuracy, documented through the concurrent analysis of reference materials and/or internal QC samples. Statements of representativeness, completeness, and comparability shall be included as appropriate. These shall meet or exceed the Data Quality Objectives set forth by the customer or project manager.

5. Data processing procedures shall be documented, reviewed, revised, and approved to meet HSE-9 data quality requirements. Configuration control shall be practiced and documented on all operating software and data bases.

6. The QA Officer and responsible Section Leader shall initiate and document all corrective QA actions.

7. The QA Officer shall report to the Group Leader at least quarterly on QA progress, problems, and data quality issues and assessments.

8. This Laboratory QA Plan shall be reviewed annually by the QA Officer and HSE-9 Group Leader, and updated or revised as required.

9. For projects not covered by one or more aspects of this Laboratory Quality Assurance Program Plan, group management shall determine the necessity of a QA project plan using the Data Quality Objective approach. All construction projects will be governed by the appropriate ENG QA plans.

TRAINING

There are no specific requirements regarding the training of analytical personnel in EPA QAMS-005. Indoctrination and training are addressed in Supplement 2S-4 of NQA-1 and there are provisions for auditor training in Section 2 of NQA-1. Detailed instruction for the implementation of our training program for analytical chemical personnel in HSE-9 is provided in AP-1. The significant requirements of the program are summarized below.

To support the achievement of acceptable work performed by HSE-9 and promote overall safe working conditions, personnel performing work must have achieved and maintained proficiency in the technical, safety, and quality assurance aspects of their job functions. Essential parts of the orientation and training program for assuring personnel qualifications necessary for proficiency include:

1. Laboratory Safety Orientation.

2. Radiation Safety Orientation.

3. QA program orientation.

4. Assignment of work based on qualifications (education and experience).

5. Training to specific QA, technical, and safety aspects of the assigned job function prior to allowing personnel to perform activities which affect quality.

6. Demonstration of proficiency with respect to QA and technical aspects of the assigned job function prior to allowing personnel to perform activities which affect quality.

7. Certification to applicable codes and standards.

8. Reassessment of qualifications, certifications, and training on a regularly scheduled basis and whenever significant changes are made to the job function (e.g. when applicable procedures are revised, when scope of work changes, etc.).

9. Maintenance of records of personnel education, qualification, certification, and training.

Personnel performing independent inspections shall be trained and certified, where applicable, in accordance with AMSE NQA-1, Supplement 2S-1.

Lead Auditors shall be trained and certified, where applicable, in accordance with the requirements of ASME NQA-1, Supplement 2S-3.

Specific qualification, training, and certification requirements, for activities not mentioned above, shall be determined on a case-by-case basis by line or project managers. This determination shall be based on the scope, complexity and nature of work to be performed and the potential effect on quality and the applicability of other codes or standards.

Line and project managers shall maintain appropriate records of staff qualification, education, experience, certification, and training; provide or arrange for the required training prior to assigning the analyst to perform work affecting quality; and assess staff qualifications, certifications, and training needs on at least an annual basis, e.g. during staff development discussions as part of the annual performance evaluation process.

RESPONSIBILITIES

HSE-9 Group Leader:

- Assure that training is appropriate to the overall needs of the group and that it is being conducted in a timely fashion.

- Maintain awareness of external training requirements and provide for their implementation.

- Provide time at group meetings for group-wide training in areas such as safety, security, environmental awareness, etc.

HSE-9 QA Officer:

- Assure that training procedures are documented and that electronic database records are being maintained by the designated QADM section personnel.

HSE-9 LIMS Manager:

- Develop, implement, and document training databases and associated data entry software.
- Monitor the quality of data contained in the training databases.

HSE-9 Section Leaders:

- Insure that section personnel are adequately qualified, indoctrinated, and trained prior to being allowed to perform activities within section work areas.
- Determine minimum qualifications and qualification procedures to establish personnel certifications.
- Prevent inadequately trained personnel from performing work for which appropriate training has not been provided.
- Provide documented evidence of all training within their section to QADM personnel for entry into databases.
- Identify required training for each employee in the section.
- Assign staff to prepare and present training.
- Ensure that trainers have necessary skills for training being presented.
- Ensure that trainees have adequate understanding of training presented.

HSE-9 Analysts:

- Perform required training to maintain skills necessary for safe and successful completion of work assignments.
- Present training to other group members in areas of expertise as requested

3. DESIGN CONTROL

Proper selection and definition of function criteria and other design inputs are necessary to assure that correct bases are established for engineering design at the outset of any project. Controls are established for engineering design activities to assure that outputs in the form of engineering designs and design data comply with functional design criteria and other specified requirements.

Documented planning is necessary to provide early and adequate assurance that specified requirements can and shall be met. Procedures are used to assure that design activities including analyses, calculations, and the preparation and control of drawings and documents are performed properly and in a consistent and uniform manner. Controlled methods are prescribed to verify that the outputs of engineering design activities comply with function design criteria and meet specified requirements.

HSE-9 does not perform engineering design. This function is performed by ENG Division. HSE-9 works with ENG project managers, designers, and QA officials to develop the initial design concept and specifications. All QA functions for design control shall be determined and specified by the ENG Division QA Program Plan. Neither basic Requirement 3 and Supplement 3S-1 of NQA-1 nor EPA QAMS-005 (Section 5.3 and 5.5) are addressed in detail by the HSE-9 Laboratory Quality Assurance Program Plan, but are addressed in the QA Program Plans of engineering organizations that work with HSE-9.

RESPONSIBILITIES

HSE-9 Group Leader:

- Assure that our input data to the design organization (usually ENG Division) are complete, reviewed, and that all requirements are identified and met.
- Participate in formal design reviews, as requested by the design organization.
- Review and concur with QA requirements of each design project.

Design Organization:

- Implement requirements of their organization's QA Program Plans and applicable procedures, including the required reviews or other verification actions, and submit documentation to HSE-9.
- Prepare the required analyses, calculations, drawings, and documents.

4. PROCUREMENT DOCUMENT CONTROL

The methods included in the administrative and technical procedures for the preparation and review of procurement documents meet Basic Requirement 4 and Supplement 4S-1 of NQA-1 and EPA QAMS-004 (Section 4.4). The significant features are summarized in the following paragraphs.

Control shall be exercised over procurement documents to ensure that the documents adequately specify the requirements needed to obtain an item or service that is satisfactory for its intended use. The correct specification of all requirements shall also help prevent schedule delays and cost increases resulting from receiving an incorrect or inadequate item or service. The controls, which are a function of the item's or service's cost and complexity, are intended to assure that the item or service is clearly and correctly specified, that the supplier shall be capable of providing a quality product, that exceptions to specifications are satisfactory to HSE-9, and that adequate evidence of item or service quality shall be provided by the vendor.

Whenever the need for procurement of an item or service is identified and the concept approved by the appropriate level of management, HSE-9 personnel with the appropriate technical background and information related to the items or services to be procured, shall develop detailed technical specifications when procuring items or services affecting quality or safety. Required reviews of these specifications shall be obtained and shall include technical peers, management, and quality assurance representatives. Upon completion and documentation of these reviews, a purchase requisition (PR) is prepared by the Group Office. As appropriate to the procurement, QA clauses shall be invoked to require such actions as preaward supplier evaluations, independent receiving inspections, post installation testing and certification, etc. Once the PR has been approved by the Group Leader, it is forwarded through the procurement chain for order placement by MAT-14. Additional QA clauses shall be added as required by the QA Program Plans of MAT Division.

All potential contractors for procured analytical services shall have a QA plan at least equivalent to this HSE-9 QAPP in all aspects. Contractor QA plans will be reviewed and approved by the HSE-9 QA Officer, in conjunction with the customer who requested the analytical services, prior to any contract award.

RESPONSIBILITIES

HSE-9 Group Leader:

- Final approval for commitment of funds.
- Additional independent technical review, if deemed appropriate.

HSE-9 Section Leaders:

- Acquire independent technical review of requestor's specifications and documentation of this review.

HSE-9 Sample Coordination Section Leader:

- Provide single point-of-contact with HSE-Division customers for the procurement of analytical services through external contracting.
- Prepare specifications for external contracting for analytical services.

HSE-9 QA Officer:

- Review of pre-procurement documentation for adequacy of QA provisions.
- Review and approve analytical services contractors QA plans prior to contract award.

HSE-9 Analysts:

- Assure that PR's and attachments contain required technical specifications and quality assurance provisions appropriate to the nature and complexity of the item or service.

MAT Division:

- Request for bids, if appropriate, award of contract, and final placement of orders.

CONTROLLED

5. INSTRUCTIONS, PROCEDURES, PLANS, AND DRAWINGS

The methods included in the administrative and technical procedures for the application, preparation, and use of instructions, procedures, and drawings meet Basic Requirement 5 of NQA-1, EPA QAMS-004 (Section 6.0), and EPA QAMS-005 (Section 5.6). The significant features are summarized in the following paragraphs.

Instructions, procedures, and drawings shall be used to assure that activities affecting quality are performed consistently and correctly. Activities of an administrative nature shall be prescribed in HSE-9 Administrative Procedures. Technical activities affecting quality, safety, and health shall be prescribed in HSE-9 Analytical Procedures, HSE-9 Quality Control Procedures, HSE-9 Standard Operating Procedures, instrument operating manuals (vendor supplied and/or HSE-9 developed), other test instructions, and/or drawings when, without these documents, there would be a significant likelihood of performing the work incorrectly, obtaining unacceptable or undesirable results, or having the potential for endangering the well-being of an employee performing these technical activities. The use of these documents and the level of detail required depends on both the impact and complexity of the activity.

Activities affecting quality shall be prescribed by Laboratory, Division, and/or Group administrative procedures, analytical procedures, QA/QC procedures, instrument operating manuals, other test instructions, and/or drawings except when vendor supplied procedures are available for standard items, or when there is a high level of certainty that the activity shall be done correctly without them (i.e. making xerox copies for internal distribution). These documents shall adhere to prescribed formats and content. They shall include appropriate acceptance criteria for verifying that the activity has been accomplished satisfactorily. Work shall be performed in accordance with these documents and the actual procedures used for a given activity or analytical determination shall be documented (i.e. SW-846 Method 8060, HSE-9 Method IH-214, etc.). In addition, all HSE-9 Administrative Procedures, Technical Procedures, Quality Assurance Procedures, Software Control Procedures, and Standard Operating Procedures shall be reviewed on an annual basis.

This Section is closely related to Section 6, which describes how documents are controlled (i.e. initiated, reviewed, approved, distributed, and changed) and identifies the positions responsible for each function.

There shall be five different procedure types in HSE-9: 1) Administrative Procedures; 2) Technical Procedures; 3) Quality Assurance Procedures; 4) Standard Operating Procedures; and 5) Software Control Procedures.

1. Administrative and Software Control Procedures shall have the following basic format:

   Title
   Section 1: Applicability

Section 2: Definitions
Section 3: DOE Orders, EPA regulations, other Source Materials
Section 4: Responsibilities (responsible staff)
Section 5: Training. This section identifies the scope of training required before the user(s) implement the procedure.
Section 6: Procedure
Section 7: Records. This section must identify the records that will be generated as a result of implementing the procedure.

2. Technical Procedures shall use the format already established for LA-10300-M:

Title

Introductory Block
- Analyte
- Matrix
- Contact Person or Author
- Range
- Minimum Detectable Activity
- Procedure
- Method No.
- Accuracy and Precision
- Acceptable MDL
- Effective Date

Sections
1. Principle of Method
2. Sensitivity
3. Accuracy and Precision
4. Interferences
5. Collection and Storage of Samples
6. Apparatus
7. Reagents
8. Calibration and Standards
9. Procedure
10. Operation of Equipment
11. Calculations
12. Source Materials

Approval block

3. QA/QC Procedures shall have the format already established for LA-10300-M:

Title

Introductory Block

- Analyte
- Matrix
- Contact Person or Author
- Spike Range
- Procedure
- Method No.
- Accuracy and Precision
- Effective Date

Sections

1. Principle of Method
2. Accuracy and Precision
3. Collection and Storage of Samples
4. Apparatus
5. Reagents
6. Calibration and Standards
7. Procedure
8. Calculations
9. Source Materials

Approval Block

4. Standard Operating Procedures shall follow the format described in Administrative Requirement 1-3 "Standard Operating Procedures and Special Work Permits," in the Laboratory Environment, Safety, and Health Manual.

RESPONSIBILITIES

Project and Line Organizations:

- Provide and use instructions, procedures, and drawings for the quality related activities they perform for HSE-9.

HSE-9 QA Officer:

- Review, approve, and distribute changes to all quality related documentation.

HSE-9 Section Leaders:

- Initiate, review, approve, distribute, and maintain changes to all instructions, procedures, and drawings related to each Section's activities.

6. DOCUMENT CONTROL

The methods included in the HSE-9 Administrative and/or Technical Procedures for the control of documents that prescribe activities affecting quality meet the requirements of Basic Requirement 6 and Supplement 6S-1 of NQA-1, EPA QAMS-004 (Section 4.4), EPA QAMS-005 (Section 5.6). The significant features are summarized in the following paragraph.

Documents that prescribe activities affecting quality, e.g. instructions, procedures, and drawings, and changes to these shall be controlled to assure that the versions in use are complete, correct, current, and readily available at the location of the work. Controls include review, comment resolution, approval, change, and distribution control.

Reviews, comment resolutions, approvals, and changes shall be performed to assure that all documents, including changes, are up-to-date, complete, correct, practical, satisfy the applicable requirements (including safety), and include the appropriate QA requirements. Documents that prescribe activities affecting quality shall be reviewed by knowledgeable technical reviewers, including designated members of the Quality Assurance and Data Management section. Review comments shall be made in writing and shall be resolved before publication. The documents shall be approved for issuance by designated approval authorities.

Distribution of the documents shall be controlled by the QADM section. Work place copies shall be at all work places before and during the performance of the activities covered, and shall be replaced or updated with approved changes as soon as these changes are issued. Changes, except for minor editorial modifications, shall be controlled in the same way as original documents.

RESPONSIBILITIES

HSE-9 Group Leader:

- Final review and approval of all HSE-9 Administrative and Technical Procedures.
- Seek more senior management and/or Laboratory QA officer concurrence where appropriate.

HSE-9 QA Officer:

- Control the review, comment resolution, approval, and distribution lists for administrative and technical procedures.
- Approve all QA Procedures.
- Review and concur on all drawings, administrative procedures, and technical procedures
- Publish and distribute administrative and technical procedures, maintain their table of contents, and maintain and archive all previous editions of these documents.

Quality Assurance and Data Management Section members:

- Conduct QA reviews of documents as assigned.

HSE-9 Section Leaders:

- Initiate, review, and approve all administrative and technical procedures, and drawings that apply to their organizations.

- Control all administrative and technical procedures, and drawings that apply to their organizations.

- Assure that work place copies of instructions, procedures, and drawings are readily available, complete, and up to date.

HSE-9 Analysts:

- Adhere to approved instructions, procedures, and drawings.

7. CONTROL OF PURCHASED ITEMS AND SERVICES

The methods included in the administrative and technical procedures meet Basic Requirement 7 and Supplement 7S-1 of NQA-1 and EPA QAMS-004 (Section 6.0). The significant features are summarized in the following paragraphs.

Controls shall be exercised over procured items and services to assure that these conform with the specified requirements. Pre-award surveys shall be used to provide assurance of a prospective vendor's current technical/QA capabilities where failure of deliverables is likely to jeopardize data validity or safety conditions, or cause significant impact on cost or schedule. Vendor verification activities shall be used primarily to help preclude delivery of items or services that have hidden defects or other characteristics difficult to verify after delivery.

Receiving inspection activities shall be performed to verify conformance of the item and documentation of requirements where failure to do so would cause safety, schedule, cost, or data impact.

The extent to which these controls are applied is dependent on the cost and complexity of the item and service, and is often determined by LANL organizations external to and independent of HSE-9 (i.e. MAT Division).

Determinations shall be made of the need for vendor evaluation, source verification, and vendor furnished documents (including nonconformance reports), receiving inspection, and acceptance testing (i.e. in the case of complex analytical instruments). Appropriate provisions shall be included in the procurement requests that leave the Group in an attempt to meet our determined needs. Other organizations within the LANL procurement system may or may not include these in the final procurement package, as a function of their own QA Program Plans. Supplier evaluations, source verifications, and receiving inspections, when required, shall probably be conducted by MAT Division personnel in accordance with their organizations policies and procedures. HSE-9 shall conduct subsequent inspections and verifications of items, services and documentation as appropriate. Determinations shall be made of the acceptability of the purchased item/service and vendor performance shall be evaluated. HSE-9 personnel shall conduct all inspections/verifications of contracted analytical services.

Samples shall be packed, shipped, and received in HSE-9 according to Administrative Procedures AP-8, AP-9, and AP-10. Chain-of-Custody shall be maintained under the provisions of AP-8.

RESPONSIBILITIES

MAT Division:

- Obtain items/services from qualified, responsible suppliers in accordance with MAT policies and procedures.

- Perform interface responsibilities between HSE-9 and external vendors on deliverables, resolution of problems, and scheduling of surveillance, audits, reviews, pre-award surveys, and receiving inspections.

HSE-9 Section Leaders:

- Assure that acceptance criteria are prepared in accordance with the original technical specifications, and that inspection/test instructions are prepared and used during independent receiving inspections.

HSE-9 Sample Coordination Section Leader:

- Establish procedures for packing, shipping, and receiving samples for HSE-9.
- Initiate chain-of-custody for all incoming samples, or transfer custody from submitting organization to HSE-9.
- Maintain all chain-of-custody and sample shipping documentation.

HSE-9 Analysts:

- Perform receiving inspection activities as needed to verify receipt of correct items/services.
- Document performance of inspection activities.

HSE-9 QA Officer:

- Assure that all appropriate QA procedures have been followed and documented.
- Approve final acceptance of contracted analytical services and data.

8. IDENTIFICATION AND CONTROL OF ITEMS AND SAMPLES

The methods included in the administrative and technical procedures for the identification and control of items meet Basic Requirement 8 and Supplement 8S-1 of NQA-1, EPA QAMS-004 (Section 6.0 and 7.0), and EPA QAMS-005 (Section 5.7). The significant features are summarized in the following paragraphs.

Items to be used in HSE-9 analytical activities shall be identified and controlled to assure that they are correct for their application, acceptable for use, and traceable to their origin. The validity and useability of data (or the assurance of end item quality) often depends on positive knowledge that effective identification and control of these items has been maintained throughout the procurement, fabrication, and/or analytical process.

Chain-of-Custody is addressed in Administrative Procedure AP-8. A Chain-of-Custody Record is required, without exception, for the tracking and recording of all samples that are submitted for chemical analysis to HSE-9. This includes samples for both internal and external analysis. The Chain-of-Custody Record form creates an accurate written record that can be used to trace the possession and handling of the sample from the moment it is received by the Sample Management Section, through analysis, final reporting, and disposal.

Items that are available for use shall have appropriately colored and labeled tags attached or nearby as specified in HSE-9 Administrative Procedure AP-5. Items shall be identified and shall be traceable to their design or procurement documents. Incorrect or nonconforming items shall be clearly labeled and controlled to prevent their inadvertent use. Limited life items shall be controlled to discourage their use beyond their expiration dates. Vendor established expiration data shall be evaluated to establish their validity and may be modified (extended or reduced) based upon professional experience of HSE-9 analysts. Materials used in fabrication shall be traceable to their origin. Materials used in testing shall be traceable to both their origin and to the tests in which they are used.

RESPONSIBILITIES

HSE-9 Section Leaders:

- Provide identification and traceability for items that they receive, hold, or transmit.
- Use only items that are known to be acceptable.
- Prevent the use of incorrect or nonconforming items.

HSE-9 Analysts:

- Use only items that are known to be acceptable.
- Prevent the use of incorrect or nonconforming items.

9. CONTROL OF ANALYTICAL PROCEDURES (PROCESSES)

The methods included in the administrative and analytical procedures for the control of routine and special processes meet Basic Requirement 9 and Supplement 9S-1 of NQA-1, EPA QAMS-004 (Section 7.0), and EPA QAMS-005 (Section 5.9, 5.11, and 5.14). The administrative and analytical procedures shall be reviewed on an annual basis. The significant features are summarized in the following paragraphs.

Processes (primarily analytical procedures in HSE-9) shall be performed by trained and qualified people, using correct materials and appropriate and approved methods, to assure that the end results of the processes shall be satisfactory; i.e., that resulting analytical data shall be valid and within the stated uncertainties. Instructions, procedures, and drawings are also used in process performance whenever there is a reasonable likelihood that without them the process shall be accomplished incorrectly, with unacceptable or undesirable results. Analysts shall be trained according to the provisions of HSE-9 Administrative Procedure AP-1 and certified (where applicable).

Quality assessment shall be conducted through a system of control charts, which are plots of multiple data points from the same or similar samples versus time. These charts are used to determine if our system is in a state of statistical control and to visualize and monitor the relative variability of repetitive data. These control charts are also used with reference materials and spiked samples to assess the accuracy of our measurements. These concepts are presented as detailed procedures in Gautier and Gladney, "Health and Environmental Chemistry: Analytical Techniques, Data Management, and Quality Assurance," LA-10300-M and in Gautier, et al., "Quality Assurance for Health and Environmental Chemistry: 1988," LA-11637-MS.

The quality of analytical data generated or contracted analytical services procured shall be assessed for precision, accuracy, representativeness, comparability, and completeness based upon EPA QAMS-005 and EPA SW-846 (draft Chapter 1, 12 Dec. 1989).

Special process controls shall be applied to processes whose end results cannot be fully inspected to provide assurance that the results are acceptable. Typical examples include welding, nondestructive testing and heat treating. Special processes shall be controlled through the use of qualified procedures, personnel, and equipment. The procedures shall be consistent with applicable codes and standards. Evidence shall be provided that special processes are performed using qualified procedures, people, and equipment. The qualification and correct performance of special processes shall be verified and documented.

Section 5 establishes the requirements for instructions, procedures, and drawings while Section 11 describes the specific use of process control in testing.

Laboratory policy shall be to maintain traceability to the National Institute of Standards and Technology (NIST), which in turn maintains traceability to international metrology standards where applicable. We cannot achieve this traceability in all cases for health and

environmental measurements because NIST has limited resources for certification of matrix-based standard reference materials for as many elements and compounds as we are called upon to measure. In addition, reference materials from other national and international agencies are used in addition to those available from NIST (e.g. EPA, USGS, DOE EML, Canadian Geological Survey, Canadian Certified Reference Materials Project, International Atomic Energy Agency, Centre de Recherces Petrographiques et Geochimiques, and the Japanese Geological Survey). We compile all available literature on the reference materials in our library so that consensus values for constituent concentrations that are not agency certified may be developed.

RESPONSIBILITIES

HSE-9 Group Leader:

- Assure that all processes satisfy the minimum requirements for safety and process control.

HSE-9 Section Leaders:

- Determine the need for instructions, procedures, and drawings in the control of processes, providing them, and assuring that all processes satisfy the minimum requirements for safety and process control.

- Assure that approved procedures, qualified personnel, and appropriate equipment are employed for the performance of all procedures and special processes.

HSE-9 Analysts:

- Adhere to applicable instructions, procedures, and drawings in the performance of procedures and special processes.

10. INSPECTION

The methods included in the administrative and technical procedures for inspection, surveillance, and data validation meet Basic Requirement 10 and Supplement 10S-1 of NQA-1, EPA QAMS-004 (Section 6.0), and EPA QAMS-005 (Section 5.11). The significant features are summarized in the following paragraphs.

Inspection shall be performed to verify that physical items conform with specified requirements. Inspection of data (including data validation) verify that their accuracy and precision conform with HSE-9 policies and procedures. Inspections shall be planned to assure that they shall be thorough and economical. Inspection methods shall be specified, when necessary, so that the inspections shall be done correctly. Acceptance criteria shall be provided so that those conducting the inspection shall be able to determine whether or not the items/services/data are acceptable. Inspections shall be performed by qualified, capable people who are independent of those who made or provided the items/services/data to assure that the inspections shall be both objective and correctly performed. Process monitoring is used when direct inspection alone cannot determine the item's/service's acceptability. Inspection results are documented to provide evidence of the acceptability of the items/services/data. Data review shall be conducted by the analytical production Section Leaders or their designees. Data validation for contracted analytical services shall be conducted by the Sample Coordination Section.

Surveillance shall be performed to verify that a quality-related activity is being or has been performed correctly. By verifying that this particular activity was done correctly, surveillance also establishes a higher degree of confidence that future similar activities shall likewise be done properly. Surveillance shall be planned to assure thorough and periodic coverage. Hold points may be necessary to assure that activities planned for surveillance shall in fact receive it. Responsible management shall be informed of surveillance results so that they can take any appropriate action.

Cost and complexity has little bearing on whether inspection is used or not. It is an important factor in determining the amount of surveillance that a project or process shall receive.

Quality related items and associated documentation shall be inspected for conformance with applicable requirements. Inspection planning shall identify the characteristics to be inspected, the acceptance criteria, and the methods to be employed. When an independent receiving inspection is required, the personnel performing the inspection shall be qualified and shall not report to the same manager as the person/supplier who did the work that is to be inspected. Process monitoring shall be used instead of or in conjunction with inspection when direct inspection alone is insufficient. Item/service/data acceptability, as determined by inspection shall be documented. Item and service inspection records shall be maintained by the Section Leaders of the personnel performing the inspections. Analytical data packages shall be stored and protected in a centralized area from which they must be checked out or in, once the data have been approved for release to the customer.

Surveillance of quality-related activities shall be performed at periodic intervals or at important process steps. Surveillance planning shall identify the activities to be covered, acceptance criteria, when applicable, and when the surveillance is planned to take place. Hold points for surveillance shall be established as necessary and shall be honored. Surveillance results shall be documented and reported to the responsible organization.

All outgoing analytical data reports shall contain all evidence of QC activity performed in conjunction with the data (i.e. QC sample results, reference material results, spike results, blanks, duplicates, etc.). All results shall be reviewed by Section management, and by the QA Officer as established by policy. Additional data package review and validation shall be instituted by Section managers as needed and appropriate.

Section 7 establishes the requirements for the use of inspection in the procurement process.

RESPONSIBILITIES

HSE-9 Group Leader:

- Determine the need for inspections/surveillance/data validations and approve the procedures to be used.

HSE-9 Section Leaders:

- Perform or obtain required inspections and data review, as applicable.
- Develop acceptance criteria.
- Notify QA Officer of upcoming Hold Points for inspection/surveillance.
- Maintain records of inspections/surveillance.

HSE-9 Sample Coordination Section Leader:

- Perform or obtain required inspections and data validation, as applicable, on contracted analytical services.

HSE-9 QA Officer:

- Develop acceptance criteria for contracted analytical services.
- Plan, perform, and document independent inspections.
- Perform and document reviews of records that provide evidence of item acceptability.
- Plan, perform, document, and report surveillance.

- Supervise analytical data repository and develop procedures for its operation.

- Issue stop-work requests where items/services/data demonstrate substantial noncompliance with acceptance criteria.

11. TEST CONTROL

The methods included in the administrative and technical procedures for control of testing meet Basic Requirement 11 and Supplement 11S-1 of NQA-1, and EPA QAMS-005 (Section 5.9 and 5.14). The significant features from the administrative and technical procedures are summarized in the following paragraphs.

Experimental testing shall be controlled to provide a high level of confidence in the validity and traceability of the resultant data. Testing to determine an item's acceptability shall also be controlled to assure that the determinations are correct.

Test requirements shall be formalized to assure that the tests shall satisfy sponsor needs. Test procedures and instructions shall be provided for the reasons given in Section 5. Acceptance criteria shall be provided when testing is done for acceptance purposes, so that those performing the test shall be able to determine objectively whether or not the item is acceptable. Testing shall be done by appropriately trained and qualified persons to assure that the testing shall be done correctly and that the results shall be accepted as valid. Testing results shall be recorded so as to be traceable to the materials and equipment used, and to the specific test parameters. The results are evaluated to assure that they indeed are valid and that they satisfy the test requirements.

Test objectives and requirements shall be documented and approved, and shall be consistent with sponsor requirements. Test procedures and instructions shall be provided in accordance with Section 5. Acceptance criteria shall be provided when testing is done to determine acceptability. Testing shall be performed by appropriately trained and qualified personnel. Test results shall be documented and shall be traceable to the materials, equipment, and test runs from which they were obtained. Test results shall be evaluated through independent technical or peer reviews.

RESPONSIBILITIES

HSE-9 Group Leader:

- Assure that test requirements are established, that they meet sponsor requirements, that they are relevant to determining the quality of the item tested, and that they are maintained current.
- Approve procedures, instructions, and personnel qualifications for the conduct of tests.
- Provide supporting services to test activities.
- Obtain independent technical and/or peer reviews of test procedures and results as appropriate.

HSE-9 QA Officer:

- Participate in independent technical and peer reviews of test procedures and results.

- Perform surveillance of testing activities.

HSE-9 Section Leaders:

- Establish technical test requirements that meet sponsor requirements, that are relevant to determining the quality of the item tested, and that are maintained current.

- Develop and approve procedures for testing, including written instructions, correct and traceable materials, proper test conditions, proper test equipment, and personnel training and qualification for the conduct of tests.

HSE-9 Analysts:

- Conduct tests in accordance with requirements.

- Document test results so that they are traceable to the test conditions used and are retrievable.

12. CONTROL OF MEASURING AND TEST EQUIPMENT

The methods included in the administrative and technical procedures for the control and calibration of MTE meet Basic Requirement 12 and Supplement 12S-1 of NQA-1, EPA QAMS-004 (Section 8.0), and EPA QAMS-005 (Section 5.8 and 5.13). These methods do not apply to standard devices such as tape measures, burettes, mercury and bimetallic thermometers, etc., if normal commercial equipment is adequate for the application. The significant features are summarized in the following paragraph.

Controls shall be established for measuring and test equipment (MTE) to assure the integrity and validity of the data and to assure that the MTE are properly calibrated. Proper selection of MTE is essential to meeting specified accuracy and precision requirements. Selection and control of MTE shall be performed by HSE-9 analysts, with the advice and assistance of MEE-9. MTE requires calibration at prescribed intervals to established national standards to provide assurance that data integrity is maintained. Controls shall also include (but not be limited to) analysis of reference materials to verify MTE overall performance, documenting these calibrations, documenting evaluation of impact on data when MTE is found out of tolerance, maintaining records and suitably marking MTE to indicate calibration status. Documented evaluation of the impact on data of out of tolerance MTE is essential to assure that previous measurements are acceptable. Calibration records shall be maintained in order to provide traceability to nationally recognized standards and objective evidence of control of the calibration process. MTE shall be labeled indicating the calibration status to the user. A MTE control listing data base on the HSE-9 VAX shall be used to assist in the overall monitoring of MTE control status and efforts. Permanent records of maintenance history and calibration of MTE shall be kept in bound notebooks available at each instrument, signed and dated.

Laboratory policy shall be to maintain traceability to NIST as described in Section 9.

RESPONSIBILITIES

HSE-9 Group Leader:

- Assure that MTE control is being carried out in an adequate and timely fashion.

HSE-9 QA Officer:

- Verify that documentation of MTE control is being developed and maintained.
- Verify that documentation of discrepant MTE is reviewed and evaluation of impact on systems or data is performed.
- Compile a history of MTE control results and verify that corrective actions have been instituted for MTE consistently found out of calibration.

HSE-9 LIMS Manager:

- Provide and maintain an MTE control data base.
- Develop software to assist QA Officer in historical analysis of MTE control.

HSE-9 Section Leaders:

- Assure the calibration of MTE using standards with an established history of stability, known valid and documented relationships to nationally recognized standards, and accuracies that are at least four times better than those of the MTE being calibrated unless limited by the state of the art.
- Assure that MTE are properly selected, identified, calibrated, and controlled.
- Assign responsibility for maintenance of MTE records and input to MTE control data base.
- Assure that evaluation of discrepant MTE is performed by responsible personnel.

HSE-9 Analysts:

- Perform evaluation of discrepant MTE in accordance with established procedures and document results.

MEE-9:

- Upon request, provide advice or direct assistance with calibration of MTE.

13. HANDLING, STORAGE, AND SHIPPING

The methods included in the administrative and technical procedures for handling, storage, and shipping of items and samples meet Basic Requirement 13 and Supplement 13S-1 of NQA-1, EPA QAMS-004 (Section 7.1), and EPA QMAS-005 (Section 5.6). The significant features are summarized in the following paragraphs.

Control of handling, storage, and shipping activities can reduce unnecessary damage, deterioration, or loss of equipment, supplies, and samples. Controls assure that items receive adequate protection against such conditions as temperature extremes, humidity, dust, shock, chemical change, etc.

HSE-9 section leaders shall prepare special technical instructions for handling, storage, and shipping of items where normal MAT Division routine methods do not suffice. These instances include critical, sensitive, perishable, or high-value items. Responsible managers shall assure that such special instructions are communicated to and implemented by the personnel performing the work. Normally, controls required by MAT Divisions QA Program Plan shall be in effect (shipping request preparation, etc.).

Samples shall be packed, shipped, and received in HSE-9 according to Administrative Procedures AP-8, AP-9, and AP-10. Chain-of-Custody shall be maintained under the provisions of AP-8.

RESPONSIBILITIES

HSE-9 Group Leader:

- Assure that necessary direction is determined and provided for the handling, storage, and shipment of items and samples.
- Assure that special instructions are communicated to and implemented by the external shipping organizations.

HSE-9 Section Leaders:

- Provide and assure implementation of special technical procedures for samples and equipment shipped, stored, or handled within their organizations.
- Assure that items are marked and labeled as required by instructions or special procedures.

HSE-9 QA Officer:

- Audit compliance with special handling and shipping instructions developed or required by EPA or sponsor organizations.

HSE-9 Sample Coordination Section Leader:

- Establish procedures for packing, shipping, and receiving samples for HSE-9.
- Initiate chain-of-custody for all incoming samples, or transfer custody from submitting organization to HSE-9.
- Maintain all chain-of-custody and sample shipping documentation.

14. INSPECTION, TEST, AND OPERATING STATUS

The methods included in the administrative and technical procedures for identifying the inspection and test status of items and equipment meet Basic Requirement 14 of NQA-1 and EPA QAMS-004 (Section 6.0). The significant features are summarized in the following paragraphs.

The status of inspection, test, and operating condition is identified to reduce the possibility of inadvertently using uninspected and untested items or of operating controls and equipment when such operation may result in personal injury, property damage, or loss of data.

Authorized HSE-9 analysts shall write and attach red hold tags to items and equipment that have an unknown status or are unacceptable, incorrect, damaged, awaiting testing, or undergoing an unattended test. Only properly authorized HSE-9 analysts shall write and attach green accept tags to items and equipment that have been deemed acceptable, or remove hold tags. HSE-9 analysts shall assure that items and equipment are properly identified as to status.

RESPONSIBILITIES

HSE-9 Group Leader:

HSE-9 QA Officer:

HSE-9 Section Leaders:

- Assure that attachment and removal of status indicators is being performed by procedure or other governing documentation, that required inspections and tests are being conducted in a timely fashion, and that items which have not passed the required inspections and tests are not inadvertently installed, used, or operated .

- Use nonconformance reports, inspection/test instructions, deficiency reports, and calibration tags, as required by Sections 7, 12, and 15.

HSE-9 Analysts:

- Attach and remove status indicators according to Administrative Procedures or other governing documentation.

- Assure that required inspections and tests are being conducted in a timely fashion.

- Do not inadvertently install, use, or operate items that have not passed the required inspections and tests.

- Use nonconformance reports, inspection/test instructions, deficiency reports, and calibration tags, as required by Sections 7, 12, and 15.

15. CONTROL OF NONCONFORMING ITEMS

The methods included in the administrative and technical procedures for control of nonconforming items and deviations from QA requirements and established procedures meet Basic Requirement 15 and Supplement 15S-1 of NQA-1, EPA AMS-004 (Section 6.0), and EPA QAMS-005 (Section 5.15). The significant features are summarized in the following paragraphs.

Controls shall be established for the documentation, control, and disposition of nonconforming items to prevent their inadvertent use. Controls shall also be provided for the documentation of deviations from QA requirements and established procedures so that the deviations can be evaluated for impact on integrity and validity of the work and corrective actions taken to prevent future occurrences.

Nonconforming items shall be identified, documented, controlled, evaluated, and disposed of in accordance with established HSE-9 Administrative Procedures. Deficiencies shall be documented, evaluated, and resolved.

RESPONSIBILITIES

HSE-9 Group Leader:

- Communicate deviation information to vendors/suppliers and obtain resolution.

HSE-9 Analysts:

- Identify, segregate, or otherwise control and document nonconforming items.
- Withhold nonconforming items from use until approval of the disposition has been obtained and any necessary repair or rework performed.
- Document deficiencies.

HSE-9 Section Leaders:

- Verify that reviewers have signed and dated each deficiency or nonconformance report and determining if additional review is needed.
- Transmit copies of such documentation to the organization or individual responsible for performance of the disposition and to the HSE-9 QA Officer, and verify that disposition action has been taken, when appropriate.
- Approve, verify and document that the disposition has been performed as directed.
- Determine the impact of a deficiency on their organization's cost and schedule.

- Determine and implement corrective actions to resolve identified deficiencies.

- Identify any project results affected by the deficiency and document the location of corrected project results.

HSE-9 QA Officer:

- Periodically analyze nonconformance reports for quality trends.

16. CORRECTIVE ACTION

The methods included in the administrative and technical procedures for addressing significant conditions adverse to quality meet Basic Requirement 16 of NQA-1, EPA QAMS-004 (Section 10.0), and EPA QAMS-005 (Section 5.15). The significant features are summarized in the following paragraphs.

Nonconformances and deviations shall be documented, reported to appropriate levels of management, the cause(s) determined and corrected, and trend analysis shall be performed to identify and monitor significant conditions adversely affecting quality. Significant conditions adversely affecting quality may also be found through audits, management assessments, or other such means. Such conditions shall be documented, causes determined, and corrective action taken to remove the causes. Lack of timely corrective action or especially significant quality affects may result in stop-work requests. Specific procedures are presented in Administrative Procedure AP-11.

Section 15 included requirements for the correction of nonconformances and deficiencies, while Section 18 includes requirements for corrective action resulting from audits.

The determination of when a condition adverse to quality is significant is partly a function of the consequences of those conditions in the future if not corrected. This determination is the responsibility of the line management or designated members of the QADM section. Any analyst may identify adverse conditions and request that corrective action be taken and documented.

When extreme or long standing conditions adverse to quality are discovered, a stop-work request shall be issued and enforced until corrective action is completed.

RESPONSIBILITIES

HSE-9 Group Leader:

- Support the issuance and final resolution of stop-work requests. Concur with close-out and lifting of stop-work requests.

- Periodically evaluate documents received or initiated in the Group related to nonconformances or deficiencies.

HSE-9 Section Leaders:

- Determine, implement, complete, and document actions required or taken in response to requests for corrective actions and provide copies of documentation to the QA Officer and Group Leader.

- Obtain QA Officer concurrence on planned actions in response to requests for corrective actions.

HSE-9 QA Officer:

- Initiate a corrective action request when a significant condition adverse to quality is detected.

- Issue stop-work requests if situations adverse to quality are significant enough to warrant immediate correction or if health and safety of personnel are in jeopardy. Close-out and lift stop-work request. This authority may not be delegated.

- Monitor action on corrective action requests and stop work requests, verifying that satisfactory corrective action has actually been taken before closing out a corrective action request.

- Concur with planned actions in response to corrective action requests.

HSE-9 Analysts:

- Identify adverse conditions and request that corrective action be taken and documented.

- Determine root causes for situations resulting in Corrective Action Requests.

- Propose specific actions to be taken to resolve Corrective Action Requests.

- Implement, complete, and document specific actions taken to resolve Corrective Action Requests.

17. RECORDS

The methods included in the Administrative and technical procedures for records management meet Basic Requirement 17 and Supplement 17S-1 of NQA-1, EPA QAMS-004 (Section 4.4 and 8.0), and EPA QAMS-005 (Section 5.10). Included are in-process requirements for record originators and custodians to follow while the records are maintained in working files, as well as transfer, storage, and microfilming once the activities documented by the records have been completed and accepted.

A records management system shall be maintained to ensure the availability of documented evidence of activities performed by HSE-9. This system provides for the protection against loss, damage, or deterioration of records and for the identification, storage, retrievability, microfilming (where appropriate), and ultimate disposition of these records.

Significant features of these requirements include:

records planning,
responsibilities of records custodians,
identification and validation of records,
chain of custody records,
record maintenance requirements while in possession of records originators,
record retention and maintenance,
records indexing system to facilitate retrieval,
storage requirements,
transfer and transmittal of completed records,
requests for stored records,
long term preservation through microfilming, and
final records disposition.

RESPONSIBILITIES

HSE-9 Group Leader:

- Assure that HSE-9 maintains its records in compliance with all applicable standards and requirements.
- Review and approve the HSE-9 records management policy.

HSE-9 QA Officer:

- Provide management oversight to the HSE-9 Document Control Center.
- Prepare and approve HSE-9 records management policy.
- Provide day-to-day records management assistance to HSE-9.

HSE-9 Section Leaders:

- Transmit completed records packages to the document control center (HSE-9 QADM section) in a timely fashion.

HSE-9 Analysts:

- Perform daily record keeping activities in conformance with all HSE-9 policies.
- Maintain working files according to HSE-9 policies.
- Transmit completed records packages to the HSE-9 Section Leaders in a timely fashion.

18. AUDITS

The methods included in the administrative and technical procedures for the audit function meet Basic Requirement 18 and Supplement 18S-1 of NQA-1, EPA QAMS-004 (Section 4.5), and EPA QAMS-005 (Section 5.12 and 5.16). The significant features are summarized in the following paragraphs.

Audits shall be performed to verify compliance with all aspects of the quality assurance program and to determine where corrective action is needed. Timely corrective action shall be taken in order to correct the specific deficiencies identified and to minimize future occurrences of the same or similar situations. Follow-up is performed to assure that timely and effective corrective action is taken in response to identified deficiencies.

Audits shall be systematically scheduled, planned, performed, and reported. Written responses shall be provided to negative audit findings by identifying the causes and noting corrective action measures proposed or already taken to prevent/minimize recurrence. Corrective action commitments shall be implemented and tracked. Details of the HSE-9 audit procedure are contained in AP-12 and AP-13 and corrective action procedures are contained in AP-11.

HSE-9 shall perform audits, as appropriate, on analytical services contractors, including on-site visits to verify contractor compliance with the approved QA plan.

RESPONSIBILITIES

HSE-9 Group Leader:

- Assure that sufficient internal audits are planned and conducted.
- Initiate external audits as needed.
- Respond to external audit findings.

HSE-9 QA Officer:

- Plan and conduct internal audits.
- Track implementation of corrective actions and perform follow-up, as necessary, to verify completion of corrective actions.
- Issue stop-work requests where necessary to ensure implementation of corrective actions.
- Report audit findings to affected organizations.
- Review audit responses for adequacy and reporting audit completion.

- Audit the existence, adequacy, and consistent use of instructions, procedures, and drawings.

- Audit the use of qualified procedures, personnel, and equipment for the performance of all processes and special processes.

- Audit the qualification procedures for certification of analytical procedures, personnel, and equipment.

Manager of audited organization (usually HSE-9 Section Leaders):

- Investigate deficiencies from audits and identify causes.

- Define, schedule, and implement corrective actions for the causes and for specific deficiency, including measures to prevent/minimize recurrence.

HSE-9 Analysts:

- Cooperate with all auditors who visit their work areas.

- Provide complete and accurate information to all audit inquires in a timely fashion.

- Investigate deficiencies from audits and identify causes.

- Implement approved corrective actions for the causes and for specific deficiency, including measures to prevent/minimize recurrence.

MAT Division:

- Arrange for performance audits of vendors.

- Transmit and receive audit correspondence between vendors and HSE-9.

- Obtain corrective action from vendors to audit findings, where possible.

- Alert HSE-9 to vendors who refuse to respond to or initiate corrective action to audit findings.

19. SOFTWARE QUALITY ASSURANCE

The methods included in the administrative and data management procedures for computer software control meet Basic Requirement 3 of NQA-1 (as interpreted for software), Section 5 of EPA QAMS-005 (as interpreted for software), and DOE Order 1330. The significant features are summarized in the following paragraphs.

Controls shall be established over the development, modification, acquisition, and use of software to assure that data produced by the software are valid representations of the natural or other phenomena being studied or modeled. Software design inputs shall be developed and reviewed to provide a sound basis for the design process, before any coding has begun. Newly developed or modified software is reviewed to eliminate as many deficiencies (including bugs) as possible before testing and initiating configuration management. Software that has been developed, modified or acquired shall be tested to verify and validate its outputs. The performance shall be verified and validated through testing on data sets similar to those it will routinely process. Testing shall not be conducted on active customer data. Production software shall be subjected to periodic re-testing to verify continued performance and to protect against undocumented modification.

Configuration management, access control, and physical protection shall be applied to protect the software against unauthorized changes, loss, or deterioration. Records of software configuration shall be maintained. Software shall be protected against uncontrolled changes and against loss or damage. The application of software shall be approved, documented, and reviewed to assure that the application is correct and that problems encountered are properly documented and resolved. Software applications shall be documented, and application problems documented and resolved. Newly developed or modified software shall receive an independent technical review. Transfers of software to or from HSE-9 shall be approved and documented as provided by C-10 and OS-6.

Data bases shall be controlled to assure that inputs are correct, modifications are made properly and documented by authorized personnel, data are protected, and deficiencies are documented, reported, and resolved. Inputs to data bases shall be verified. Modifications to data bases shall be approved and documented, as appropriate. Access to data bases shall be limited. New data bases shall be approved before implementation. Data bases shall be backed up. Deficiencies in data bases shall be documented and resolved.

Details of these activities are contained in HSE-9 Administrative Procedures AP-14.

RESPONSIBILITIES

HSE-9 QA Officer:

- Delegate responsibility for Software QA to LIMS manager.
- Participate in Configuration Control Committee and LIMS Users Advisory Committee.

- Review and approve final software documentation.
- Review and approve new software design initiation.

HSE-9 LIMS Manager:

- Responsible for day-to-day operation of HSE-9 LIMS.
- Develop and implement information management policy and procedures, in conjunction with the Configuration Control Committee.
- Provide overall design coordination and control for LIMS.
- Produce QA summary reports as specified by the QA Officer.
- Participate in LIMS Users Advisory Committee.
- Chair the HSE-9 Configuration Control Committee.
- Determine requirements for software control.
- Obtain and resolve independent technical review of newly developed software.
- Review test and verification documentation of new or modified software.
- Control inputs, modifications, and access to data bases.

HSE-9 Configuration Control Committee:

- Provide overall software configuration control.
- Develop and implement information management policy and procedures.

HSE-9 LIMS Users Advisory Committee:

- Provide user input to information management and group-wide computing needs.
- Develop recommendations on information management priorities, policies and procedures.

HSE-9 VAX System Manager:

- Protect and backup all software and databases residing on the HSE-9 VAX.
- Participate in Configuration Control Committee and LIMS Users Advisory Committee.

- Responsible for all systems aspects of information management.

HSE-9 Programmers:

- Participate in Configuration Control Committee and LIMS Users Advisory Committee.
- Validate and document software performance through testing on data sets similar to those that the software will process.
- Maintain records of software configuration.
- Assure that non-approved software shall not be used to report customer data.

HSE-9 Analysts:

- Use only tested and approved software available for group use through the HSE-9 LIMS.
- Propose enhancements or new software as appropriate to the LIMS Users Advisory Committee or the Configuration Control Committee.

20. QUALITY IMPROVEMENT

The Group Leader, Quality Assurance Section, and HSE-9 Section Leaders shall recommend and review proposals for improvements in the quality program. This group shall emphasize continuous improvement with a focus on problem prevention, with the goal of producing products that continuously meet or exceed requirements and expectations.

CONTROLLED

HSE-9 QUALITY ASSURANCE PROGRAM PLAN APPROVAL

Title: Laboratory Quality Assurance Program Plan

Revision No.: 1

Group Leader: _____ **Date:** 4/1/91

QA Officer: Margaret A. Gautier **Date:** 3-28-91

APPENDIX III
Section IIIb

Laboratory Analytical Protocols Used for LANL Sludges 1988-1993
Revision 1, April 1, 1991

CONTROLLED

LA-10300-M, Vol. I

UC-907
Issued: May 1986
Revised: November 1993
CST-9 Internal Revision Only: September 1994

Health and Environmental Chemistry: Analytical Techniques, Data Management, and Quality Assurance

INORGANIC CHEMISTRY

Edited by Margaret A. Gautier

Los Alamos
NATIONAL LABORATORY
Los Alamos, New Mexico 87545

CONTROLLED

ABOUT THIS MANUAL

This manual, LA-10300-M, documents the analytical methodology used by the Los Alamos National Laboratory Environmental Chemistry Group. All the categories of procedures listed in the Contents will eventually be included in the manual. When completed, LA-10300-M will consist of Volumes I through IV. Because of the vastness of this effort, the manual is being issued one section at a time. When a new section is issued, the previously issued sections will be revised as needed.

Two previous documents, LA-1858, *Analytical Procedures of the Industrial Hygiene Group*, and LA-9763-M, *Manual of Analytical Methods for Radiobioassay*, are superseded by this manual.

A document control sheet is provided in the front of the manual. Please use it to notify us of any changes of address.

Environmental Chemistry, EM-9
Los Alamos National Laboratory

CONTROLLED

PREFACE

The Health and Safety (HS) and Environmental Management (EM) divisions are engaged in identifying hazards to the workers and the environment at the Los Alamos National Laboratory. Decisions that must be made in this respect depend upon the availability of sound analytical data. Procedures for the measurement of the presence and concentration of substances hazardous to human health as well as an evaluation of the quality of the environment are essential to satisfactory decision making.

An important tool for evaluating the exposure of workers and the environment to toxic substances is the analytical method. This volume is a collection of analytical methods used by the inorganic chemist to identify and quantify hazardous inorganic materials in a wide variety of environmental and biological samples. The procedures measure the concentration of the desired analytes with the accuracy, precision, and specificity required by environmental surveillance and compliance personnel.

These analytical procedures were developed by the staff of EM-9 or were modified from methods developed and evaluated by the Environmental Protection Agency and others. Each procedure is presented simply and concisely. We hope that any competent analyst will be able to use these procedures without difficulty.

CONTROLLED

PREFACE

Los Alamos National Laboratory supports an ongoing environmental surveillance program as required by US Department of Energy Order 5400.1, "General Environmental Protection Program" (November 1988). This surveillance program involves routine monitoring for radiation, radioactive materials, and hazardous chemical substances on Laboratory sites and in the surrounding region. Decisions that must be made regarding environmental compliance depend upon the availability of sound analytical data.

An important tool for evaluating the environment is the analytical method. The analytical methods used by Environmental Chemistry Group (EM-9) support the monitoring activities by documenting compliance with appropriate standards, identifying trends, providing information for the public, and contributing to general environmental knowledge. These methods measure the concentration of the desired analytes with the precision, accuracy, and specificity required by environmental surveillance and compliance personnel.

This section of the manual presents EM-9's environmental chemistry procedures, and is thus part of the overall quality control documentation effort to support the environment, safety, and health programs of the Laboratory. These analytical procedures were developed by the staff of EM-9 or were modified from methods developed and evaluated by the Environmental Protection Agency and others for use with environmental samples. Each procedure is presented in a simple and concise manner. We hope that any competent analyst will be able to use these written procedures.

Environmental Chemistry

CONTROLLED

CONTENTS

Preface EI-5

Acknowledgements EI-7

Abstract EI-9

Environmental Analytical Procedures—Inorganic

EI100	Arsenic in Water and Soil Extracts—Graphite Furnace AA	05/93
EI105	Barium in Water and Soil Extracts—Flame AA	09/92
EI110	Beryllium in Biological and Geological Matrices	In Progress
EI115	Cadmium, Copper, and Lead in Biological and Geological Matrices	In Progress
EI120	Cadmium in Water and Soil Extracts—Graphite Furnace AA	05/93
EI125	Calcium in Water and Soil Extracts—Flame AA	09/92
EI130	Chromium in Oil, Water, and Soil Extracts—Flame AA	09/92
EI135	Chromium in Water and Soil Extracts—Graphite Furnace AA	05/93
EI140	Copper in Water and Soil Extracts—Flame AA	09/92
EI145	Iron in Water and Soil Extracts—Flame AA	09/92
EI150	Lead in Water and Soil Extracts—Graphite Furnace AA	05/93
EI155	Lithium in Biological and Geological Matrices	In Progress
EI160	Magnesium in Water and Soil Extracts—Flame AA	09/92
EI165	Mercury in Water—Cold Vapor AA	In Progress
EI170	Nickel in Water and Soil Extracts—Flame AA	09/92
EI175	Potassium in Water and Soil Extracts—Flame AA	09/92

EI180	Runoff Samples for Mercury, Lead, and Beryllium	In Progress
EI185	Selenium in Water and Soil Extracts—Graphite Furnace AA	05/93
EI190	Silver in Water and Soil Extracts—Flame AA	09/92
EI195	Sodium in Water and Soil Extracts—Flame AA	09/92
EI200	Thallium on Filters—Graphite Furnace AA	05/93
EI205	Thallium in Water and Soil Extracts—Graphite Furnace AA	05/93
EI210	Zinc in Water and Soil Extracts—Flame AA	09/92
EI300	Barium in Soils—Acid Digestion and ICPAES	Retired
EI310	Elemental Scans of Water—ICPMS	In Progress
EI320	Extraction Procedure Toxicity (EPTOX) Metals—Acid Digestion and ICPAES	In Progress
EI330	Extraction Procedure Toxicity (EPTOX) Metals—ICPMS	In Progress
EI340	Metals in Water—ICPMS	In Progress
EI350	Trace Elements in Filters, Soil, Sludge, Urine, Leachates, Water, and Waste—ICPMS (EPA Method 200.8 and 6020)	In Progress
EI360	Trace Elements in Waters and Wastes—ICMPS (EPA Method 200.8)	In Progress
EI370	Trace Metals in Soils—Acid Digestion and ICPAES	In Progress
EI400	Anions in Water and Waste Water—Ion Chromatography	06/92
EI410	Boron in Natural and Geothermal Waters—Flow Injection	In Progress
EI420	Fluoride in Environmental Matrices	In Progress
EI430	Fluoride in Water—ISE	In Progress
EI440	Nitrate in Water—Cadmium Reduction, UV-VIS Spectrophotometry	In Progress
EI450	Titanium—Colorimetric Using Diantipyrylmethane	In Progress

CONTROLLED

EI460	Total Phosphate in Water—Ascorbic Acid	In Progress
EI470	Silicon—Heteropoly Blue Colorimetric	In Progress
EI500	Fluorine in Water—Ion-Selective Electrode	In Progress
EI510	Nitrate in Water—Ion-Selective Electrode	In Progress
EI520	pH of Soil	10/91
EI630	Arsenic, Antimony, Tungsten, and Molybdenum in Silicates—RENA	Retired
EI640	Bromine and Iodine in Geological Matrices—IENA	In Progress
EI650	Copper and Noble Metals in Geological Matrices—RTNA	In Progress
EI660	Selenium in Environmental Matrices—RTNA	In Progress
EI700	Carbonate Carbon in Geologicals by Gravimetric Analysis	In Progress
EI730	Mercury in Environmental Materials—Cold Vapor Gold Film Analyzer	Retired
EI732	Metals in Soil (Field Screening)—EDXRF	10/93
EI735	Sample Preparation for Spectrochemical Analyses of Total Recoverable Elements (EPA Method 200.2)	12/90
EI740	Sulfur in Environmental Matrices—Combustion with Infrared Detection	In Progress
EI760	Total Hardness—Titrimetry	In Progress
EI770	Total Organic Carbon	In Progress
EI780	Total Organic Halides (TOX)	In Progress
EI790	Water (Bound and Unbound) in Geological Matrices—High Temperature Coloumetry	Retired

CONTROLLED

Health and Environmental Chemistry: Analytical Techniques, Data Management, and Quality Assurance

Edited by

Margaret A. Gautier

ABSTRACT

This manual has been prepared by the Environmental Chemistry Group of the Los Alamos National Laboratory. It is part of the overall quality control effort to document the analytical methodology used to support the Laboratory's health, safety, and environment programs. The present manual is the first compilation of these methods and contains step-by-step techniques for use with bioassay, tissue, environmental, industrial hygiene, and waste water samples. These organic, inorganic, and radiochemical analytical techniques, for use with a wide variety of matrices, were developed by the Environmental Chemistry staff or were adapted from procedures found in the literature. These techniques have been tested by senior chemists and technicians to prove their reliability and validity to measure concentrations of analytes with the precision, accuracy, and specificity required by various Laboratory programs. Precision and accuracy statements are provided where such data are available. Each procedure is presented in a simple and concise manner and includes interferences, apparatus, and reagent preparation, calibration methods, and data reduction formulas. The procedures utilize equipment and skills available in modern analytical chemistry laboratories. The analytical techniques are presented to provide guidance to laboratories performing analytical services for health, safety, and environment programs.

CONTROLLED

Environmental Chemistry
Analytical Techniques

Edited by

Margaret A. Gautier

ABSTRACT

This section of the manual has been prepared to document the analytical methodology used by the Los Alamos National Laboratory Environmental Chemistry Group for environmental analyses. It is part of the overall quality control effort to support the environment, safety, and health programs of the Laboratory. The analytical procedures were either developed by the Environmental Chemistry staff, modified from standard methods developed and evaluated by the Environmental Protection Agency, or adapted from procedures found in the literature and have been tested by chemists and technicians to show their validity. The methods measure the concentration of the desired analytes with the precision, accuracy, and specificity required by environmental surveillance and compliance personnel. The procedures utilize equipment and skills available in modern analytical laboratories. Precision and accuracy statements are provided where such data are available. Each procedure is presented in a simple and concise manner and includes interferences, apparatus, reagent preparation, calibration methods, and data reduction formulas.

CONTROLLED

ARSENIC IN WATER AND SOIL EXTRACTS — GRAPHITE FURNACE AA

Analyte: Arsenic	**Method No.:** EI100
Matrix: Water, waste water, and soil extracts	**Detection Limit:** 2.0 μg/L
Procedure: Graphite furnace atomic absorption	**Accuracy and Precision:** 102% ± 1.02% RSD
Effective Date: 09/25/91	**Authors:** Michael G. Bell Barbara J. Hemberger

SAFETY NOTE: Before beginning this procedure, read all of the Material Safety Data Sheets for the chemicals listed in Sec. 6. Read Sec. 4.3 of the EM-9 Safety Manual for information on personal protective clothing and equipment. Read Sec. 11 of this procedure and Source Material 12.6 for proper waste disposal practices.

1. Principle of Method

1.1. This procedure is based on Environmental Protection Agency (EPA) method 206.2 and SW846 method 7060.

1.2. Arsenic in solution may be readily determined by graphite furnace atomic absorption spectroscopy. The method is applicable to As in drinking, surface, and saline waters and in domestic and industrial wastes.

1.3. Drinking water free of particulate matter may be analyzed directly. Ground water, other aqueous samples, TCLP extracts, industrial wastes, soils, sludges, sediments, and other solid wastes require digestion before analysis.

2. Accuracy and Precision

2.1. The determination of arsenic in 19 in-house quality control samples (55 μg/L) over an 8-month period had a mean of 56.3 μg/L and a relative standard deviation (RSD) of 1.02%.

3. Collection and Storage of Samples.

3.1. Preserve samples with nitric acid (HNO_3) at a pH <2.0. Complete analysis within 6 months.

4. Interferences

4.1. Contamination is of prime concern during sample preparation. Periodically clean the work area, including the bench top, to eliminate environmental contamination. Use acid-washed sample cups in the autosampler.

4.2. Chemical interferences can be controlled by the addition of a matrix modifier to all samples and standards. Refer to Perkin-Elmer chart 0993-8199 Rev. D (11/89), or to the PE *Methods of Analysis for AAS*, for the appropriate matrix modifier.

4.3. Silica from the glassware will grow into the sample solution during and following sample processing. To control this problem, use disposable sterile 50-mL polypropylene centrifuge tubes in the sample digestion steps.

5. Apparatus

5.1. Centrifuge tubes: 50-mL, sterile polypropylene.

5.2. Rainin pipettes with disposable tips.

5.3. Wash bottles: 125-mL, polypropylene, screw tops.

5.4. Hot plate: with aluminum heating block drilled to hold centrifuge tubes.

5.5. Perkin-Elmer 5000 atomic absorption instrument: equipped with a Zeeman graphite furnace or equivalent.

5.6. Required gas for the instrument is ultrapure argon.

6. Reagents

6.1. Nitric acid (low-temperature redistilled acid, LTRD).

6.2. Hydrochloric acid (low-temperature redistilled acid, LTRD).

6.3. Double-deionized water.

6.4. ASTM Type I water (>10 MΩ/cm resistivity, <0.1 μmho/cm conductivity).

6.5. Appropriate matrix modifier for all samples, standards, and QCs.

6.6. Secondary standards for making the appropriate standard curves.

7. Sample Preparation Procedure

7.1. To determine total recoverable elements in water, waste water, and soil extracts, take a 50-mL aliquot from an acid-preserved sample containing not more than 0.25% (wt/vol) total solids. Place the aliquot in a sterile 50-mL disposable polypropylene centrifuge tube.

7.1.1. Add 500 μL of LTRD HNO_3 and 250 μL of Ultrex or LTRD HCl to each sample.

7.1.2. Heat on a hot plate without boiling (approximately 85°C) until the volume is reduced to 5-10 mL.

7.1.3. Loosely cover the tube with the cap and reflux for 30 min.

7.1.4. Allow the sample to cool and dilute to 50 mL with ASTM Type I water.

7.1.5. Run one digested blank and one digested spike for each digested batch.

7.1.6. Run a duplicate and a spike for 10-20% of the samples.

7.1.7. For TCLP samples, run a spike for every sample and 20% duplicates.

7.1.8. The analysis should be performed before the EPA regulatory holding times expire.

7.1.9. Add sample and standards to acid-cleaned sample cups.

8. Instrument Procedure

8.1. Instrument power and gases check.

8.1.1. Turn the **POWER** switch on the PE5000 atomic absorption (AA) to **ON**.

8.1.2. Turn **ON** the argon supply valve after checking the pressure at the tank. Pressure must be over 100 psi or the tank must be changed.

8.1.3. Turn the AA switch from **STANDBY** mode to **RUN**.

8.1.4. Make sure the exhaust hood over the graphite furnace is functioning.

8.2. Instrument setup.

8.2.1. Insert the arsenic lamp into the turret oriented toward the ETVAA and plug it in.

8.2.2. Enter **turret lamp number** into keyboard.

8.2.3. Enter recommended **lamp milliamps** (mA) or **watts** depending on lamp type (EDL/HCL).

8.2.3.1. Warm up the EDL and/or HCL lamp for at least 20 min.

8.2.4. Enter **lamp slit width** using **LOW SLIT** key for ETVAA.

8.2.5. Enter **lamp wavelength** using **LAMBDA PEAK** key.

8.2.6. Turn AA switch inside lamp housing to **ICP/ZAA** position.

8.3. Keyboard setup.

8.3.1. Set **SIGNAL** key to **PK AREA** (peak area).

8.3.2. Turn **REC ABS** (record absorbance) signal key **ON**.

8.3.3. Enter **AVG** (average) number (if used).

8.3.4. Enter **CONC MODE** (concentration).

8.4. Furnace setup.

8.4.1. Press **ZAA** key.

8.4.2. Turn **ACCESSORY** knob to **ON** position.

8.4.3. Turn chiller **ON** and check that the water level is above the coils.

8.4.4. Check that the water bottle for distilled water rinse on the autosampler is full.

8.4.5. Turn **ON** the HGA-500 programmer.

8.4.5.1. Enter the temperature program for the element from the ETVAA procedure manual and store the procedure number.

8.5. Computer setup.

8.5.1. Turn PE AA Data System 10 computer **master switch** to **ON**.

8.5.2. Set up ID/WT file.

8.5.3. Turn **print button** on PE5000 keyboard **ON** and store the program.

8.6. Set up autosampler.

8.6.1. Recalibrate the standard curve every 8 to 12 samples.

8.6.2. Enter the number of standards (# stds).

8.6.3. Enter the last sample number (last samp).

8.6.4. Enter the sample volume (samp vol).

8.6.5. Enter the alternate volume (alt vol) for the matrix modifier if used.

8.6.6. Enter the instrument program number (inst prog).

8.6.7. Enter the HGA program number (HGA prog).

8.7. Graphite furnace setup.

8.7.1. Open the furnace and clean or replace the graphite tube. Use the tube with or without the platform depending on the element.

8.7.2. If inserting a new tube, condition it with the manual temperature key.

8.7.3. Using the alignment tool, reinsert the graphite tube and close the furnace.

8.7.4. Using the manual temperature key, set the pyrometer to the atomization temperature of the element and balance the lights (red/green) using the calibration (CAL) knob.

8.7.5. Place the AS40 in **STANDBY** mode and align the autosampler arm. Check the depth of the sample delivery inside the tube and inside the samples. Exit **STANDBY** mode.

8.7.6. Remove and check the furnace lenses. Reinsert the lenses and check the absorbance. If the absorbance reads above 0.100, clean the lenses.

8.7.7. Put samples and standards into the autosampler tray and cover with the dust cover to prevent contamination.

8.7.8. Put the matrix modifier in the holder position, if required.

8.7.9. Check the blank and standards manually.

8.7.10. Calculate the characteristic concentration (cc). If it is within ±20% of chart value (0993-8199 Rev. D 11/89) start the run.

8.7.11. Enter **collect data** mode on PE Data System 10 computer and follow instructions.

8.7.12. After run is complete, press to **DISK** key on PE Data System 10 **twice**.

8.7.13. Select **report** mode on the computer, follow instructions, and print out the final report.

8.7.14. When finished, shut off the chiller, argon gas supply, lamps, EDL power supply, and computer.

8.7.15 Place the autosampler, HGA Programmer, and PE5000 in standby mode.

9. Emergency Shutdown Procedure

9.1. In case of power failure, turn **POWER** switch on PE5000 AA to **OFF**.

9.2. Turn **OFF** the gas valves.

9.3. Follow building power failure procedures.

10. Calculations

10.1. Characteristic concentration (cc).

$$cc = \frac{C \times V \times 0.0044}{A_s},$$

where cc = characteristic concentration for ETVAA,
C = concentration of standard, (μg/L)
V = sample aliquot, (μL)
A_s = absorbance of standard, and
0.0044 = 1% absorbance.

11. Proper Waste Disposal Practices

11.1. Solid waste.

11.1.1. Solid waste contaminated with hazardous chemicals above the level of concern is not normally generated. This waste can be placed in the usual trash receptacles in the labs at TA-50.

11.1.2. If a solid waste is generated that may be contaminated at a level of concern, the appropriate paperwork is completed on a case-by-case basis.

11.1.2.1. Complete a Waste Profile Request Form (WPRF) describing the solid waste and send it to the Waste Management group for review.

11.1.2.2. If the Waste Management group determines that the solid waste is contaminated below the level of concern, dispose of the waste as ordinary laboratory trash.

11.1.2.3. If the Waste Management group determines that the solid waste is contaminated above the level of concern, request pickup of the contaminated waste as described in Sec. 11.3.

11.2. Liquid waste.

11.2.1. Accumulate liquid waste containing hazardous contaminants, such as solutions of trace metals above the limits posted for dumping at each lab sink at TA-50, in a coated glass jar in a secondary containment tray and keep it segregated from liquid waste contaminated with listed organics or cyanide greater than 0.5 ppm.

11.2.2. Label the bottle with a hazardous waste label, a corrosive label, a toxic label, and a label indicating its use for trace metal waste. Date the label.

11.2.3. Open the bottle only for the time necessary to add waste.

11.2.4. Keep full bottles in the secondary containment tray pending pickup by the Waste Management group.

11.2.5. Label a new bottle for further use.

11.2.6. Dump liquid inorganic wastes which do not contain any EPA-listed components, or which have toxic metals below the limits posted at lab sinks at TA-50, directly into the lab sink.

11.3. Waste pickup.

11.3.1. Request pickup by the Waste Management group of solid waste or a full bottle of liquid waste containing trace metals using the current Chemical Waste Disposal Request Form (CWDR). The current Waste Profile Request Form (WPRF) that describes the waste is referenced on the CWDR.

11.3.2. The Waste Management group picks up the waste for disposal in accord with Laboratory policy.

12. Source Material

12.1. *Analytical Methods for Atomic Absorption Spectrophotometry*, (Perkin-Elmer, Norwalk, Conn., 1976).

12.2. *Instructions: Zeeman/5000 System*, (Perkin-Elmer, Norwalk, Conn., 1982).

12.3. Methods for Chemical Analysis of Water and Wastes, EPA-600/4-79-020 U.S. Environmental Protection Agency (rev. March 1983).

12.4. Perkin-Elmer chart 0993-8199 Rev. D (11/89).

12.5. "Test Methods for Evaluation of Solid Waste: Laboratory Manual of Physical and Chemical Methods," EPA report no. SW-846 (November 1986).

12.6. "Hazardous and Mixed Waste," Administrative Requirement 10-3, in *Environment, Safety, and Health Manual*, Los Alamos National Laboratory Manual, Chapter 1 (most recent edition).

Revisions or additions to the procedure are marked ( ). Where a section heading is marked the entire section has been revised.

CONTROLLED

EM-9 ANALYTICAL PROCEDURE REVIEW AND APPROVAL

Method: Arsenic in Water and soil Extracts — Graphite Furnace AA

Method No.: EI100 **Revision No.:** 1

Section Leader _____ **Date:** _____

Group Leader _____ **Date:** 5/12/93

QA Concurrence Margaret A. Gautier **Date:** 5-12-93

CONTROLLED

BARIUM IN WATER AND SOIL EXTRACTS — FLAME AA

Analyte: Barium	**Method No.:** EI105
Matrix: Water, waste water, and soil extracts	**Detection Limit:** 100 μg/L
Procedure: Flame atomic absorption	**Accuracy and Precision:** 100% ± 1.0% RSD
Effective Date: 09/23/91	**Authors:** Michael G. Bell Barbara J. Hemberger

SAFETY NOTE: Before beginning this procedure, read all of the Material Safety Data Sheets for the chemicals listed in Sec. 6. Read Sec. 4.3 of the EM-9 Safety Manual for information on personal protective clothing and equipment. Read Sec. 11 of this procedure and Source Material 12.5 for proper waste disposal practices.

1. Principle of Method

1.1. This procedure is based on Environmental Protection Agency (EPA) method 208.1 and SW-846 method 7080.

1.2. Barium in solution may be readily determined by atomic absorption spectroscopy (AAS). The method is simple and rapid and is applicable to Ba in drinking, surface, and saline waters and in domestic and industrial wastes.

1.3. Drinking water free of particulate matter may be analyzed directly. Ground water, other aqueous samples, TCLP extracts, industrial wastes, soils, sludges, sediments, and other solid wastes require digestion prior to analysis.

2. Accuracy and Precision

2.1. The determination of barium in four in-house quality control samples (400 μg/L) over a three-month period had a mean of 397.5 μg/L and a relative standard deviation (RSD) of 1.0%.

3. Collection and Storage of Samples

3.1. Preserve samples with nitric acid (HNO_3) at a pH <2.0. Complete analysis within six months.

4. Interferences

4.1. Contamination is of prime concern during sample preparation. The work area, including the bench top, should be periodically cleaned to eliminate environmental contamination.

4.2. Chemical interferences can be controlled by the addition of KCl, a matrix modifier, to all samples and standards at high concentration levels (1.0%).

4.3. Silica from the glassware will grow into the sample solution during and following sample processing. Use sterile disposable 50-mL polypropylene centrifuge tubes in the sample digestion steps to control this problem.

5. Apparatus

5.1. Centrifuge tubes: 50-mL, sterile polypropylene.

5.2. Rainin pipettes with disposable tips.

5.3. Wash bottles: 125-mL, polypropylene, screw tops.

5.4. Hot plate: with aluminum heating block drilled to hold centrifuge tubes.

5.5. Perkin-Elmer 5000 atomic absorption spectrometer or equivalent.

5.6. Gases for the above instrument: air, acetylene, nitrous oxide, argon.

6. Reagents

6.1. Nitric acid (low-temperature redistilled acid, LTRD).

6.2. Hydrochloric acid (low-temperature redistilled acid, LTRD).

6.3. Double-deionized water.

6.4. Potassium chloride. Matrix modifier for all samples and standards.

6.5. ASTM Type I water (>10 MΩ/cm resistivity, <0.1 μmho/cm conductivity).

7. Sample Preparation Procedure

7.1. To determine total recoverable elements in water or waste water, take a 50-mL aliquot from an acid-preserved sample containing not more than 0.25% (wt/vol) total solids. Place the aliquot in a sterile disposable 50-mL polypropylene centrifuge tube.

7.1.1. Add 500 μL of LTRD HNO_3 and 250 μL of Ultrex or LTRD HCl to each sample.

7.1.2. Heat on a hot plate without boiling (approximately 85°C) until the final volume is reduced to 5-10 mL.

7.1.3. Loosely cover the tube with the cap and reflux for 30 min.

7.1.4. Allow the sample to cool and dilute to 50 mL with ASTM Type I water.

7.1.5. Run one digested blank and one digested spike with each digested batch.

7.1.6. Run a duplicate and a spike for 10-20% of the samples.

7.1.7. For TCLP samples, run a spike for every sample and run 20% duplicates.

8. Instrument Procedure

8.1. Power instrument and check gases.

8.1.1. Turn the **POWER** switch on the Perkin-Elmer (PE) 5000 atomic absorption (AA) spectrometer to **ON**.

8.1.2. Turn the **POWER** switch on the PE 5000 automatic burner control to **ON**.

8.1.3. Turn the **AIR SUPPLY** valve **ON**.

8.1.4. Check the pressure in the acetylene tank; if it is <100 psi, change the tank. Turn the **ACETYLENE SUPPLY** valve **ON**.

8.1.5. Turn the **NITROUS OXIDE SUPPLY** valve **ON**, if necessary.

8.1.6. Turn the AA switch from **STANDBY** mode to **RUN**.

8.1.7. Make sure the exhaust hood is functioning.

8.1.8. Make sure the fluids in the drain vessel and drain loop are at their proper levels.

8.2. Instrument setup.

8.2.1. Insert the barium lamp in the turret and plug it in.

8.2.2. Enter the **turret lamp number** on the keyboard.

8.2.3. Enter the recommended **lamp milliamps** (mA).

8.2.4. Enter the **lamp slit width** using the **HIGH SLIT** key for flame AA.

8.2.5. Enter the **lamp wavelength** using the **LAMBDA PEAK** key.

8.2.6. For **signal keys**, enter the **CONTINUOUS** key for setup.

8.2.7. Press the **RECORD ABSORBANCE** key.

8.2.8. Set the **MODE** key to **ABSORBANCE**.

8.2.9. If the wavelength is >300 nm, use the **AA-MODE** key.

8.2.10. If the wavelength is <300 nm, use the **AA-BG MODE** key.

8.2.11. Press the **SETUP** key and adjust the lamp for maximum absorbance.

8.2.11.1. If the absorbance is >80, press the **GAIN** key and continue the lamp adjustment.

8.2.11.2. When the maximum absorbance is reached, turn the **SETUP** key to **OFF**.

8.2.12. Set the **TIME** key to 0.5 s.

8.2.13. Press the **AZ** (autozero) key. Absorbance should read zero.

8.2.14. Install the 10-cm burner head for air-acetylene analysis and the 5-cm head for nitrous oxide-acetylene.

8.2.15. Adjust the burner head height.

8.2.16. Set oxidant and acetylene flow from Table 8.2 in PE *Analytical Methods for AAS*. (source material 12.1).

8.2.17. Shut the burner shield door and light the flame using the flame **ON/OFF** key on the burner assembly.

8.2.18. Aspirate double-deionized water while the flame is lit.

8.2.19. Aspirate the standard and adjust the instrument for maximum absorbance.

8.3. Running samples.

8.3.1. Enter S1, S2, and S3 as directed for standards in *Analytical Methods for AAS*.

8.3.2. Reset **TIME** key to 3 to 6 s.

8.3.3. Press the signal **HOLD** key.

8.3.4. Select **AVERAGE** key if desired.

8.3.5. Aspirate the known standard and press the **READ** key.

8.3.6. Calculate the characteristic concentration (cc). The result should be within ±20% of the value in *Analytical Methods for AAS*.

8.3.7. Aspirate the calibration-curve standards and read the absorbance.

8.3.8. Switch the **MODE** key to **CONC** (concentration).

8.3.9. Aspirate the standards to set concentration keys as needed.

8.3.10. Read samples and QCs (blind and known).

8.3.11. Recalibrate the instrument with standards every 8 to 12 readings.

8.3.12. When finished, switch the flame **ON/OFF** key to **OFF**. Press the **CHECK FLOW** key on the auto burner control twice to relieve line pressure.

8.3.13. Turn the **POWER** switch on the automatic burner control to **OFF**.

8.3.14. Switch the PE 5000 to **STANDBY** mode.

9. Emergency Shutdown Procedure

9.1. In case of power failure, turn the **POWER** switch on the PE 5000 to **OFF**.

9.2. Turn the gas valves **OFF**.

9.3. Follow procedures for building power failure.

10. Calculations

10.1. Characteristic concentration (cc).

$$cc = \frac{C \times 0.0044}{A_s},$$

where cc = characteristic concentration for flame AA,
C = concentration of standard,
0.0044 = 1% absorbance, and
A_s = absorbance of standard.

11. Proper Waste Disposal Practices

11.1. Solid Waste

11.1.1. Solid waste contaminated with hazardous chemicals above the level of concern is not generated during the routine preparation of QC samples for analysis for inorganic contaminants.

11.1.2. If a solid waste is generated that may be contaminated at a level of concern, the appropriate paperwork is completed on a case-by-case basis.

11.1.2.1. A Waste Profile Request Form (WPRF) describing the solid waste is completed and sent to the Waste Management Group for review.

11.1.2.2. If the Waste Management Group determines that the solid waste is contaminated below the level of concern, the waste is disposed of as ordinary laboratory trash.

11.1.2.3. If the Waste Management Group determines that the solid waste is contaminated above the level of concern, pickup of the contaminated waste is requested as described in Sec. 9.3.

11.2. Liquid Waste

11.2.1. Liquid waste containing hazardous contaminants, such as solutions of trace metals, is accumulated in a coated glass jar in a secondary containment tray and is kept segregated from liquid waste contaminated with organic or radioactive substances or cyanide.

11.2.2. The bottle is labeled with a hazardous waste label and a label indicating its use for trace-metal waste.

11.2.3. The bottle is opened only for the period of time necessary to add waste to it.

11.2.4. When the bottle is full, it is capped and kept in the secondary containment tray pending pickup by the Waste Management Group.

11.2.5. A new bottle is labeled for further use.

11.3. Waste Pickup

11.3.1. Pickup by the Waste Management Group of solid waste or a full bottle of liquid waste containing trace metals is requested using the current

CONTROLLED

Chemical Waste Disposal Request Form (CWDR). The current Waste Profile Request Form (WPRF) that describes the waste is referenced on the CWDR.

11.3.2. The Waste Management Group picks up the waste for disposal in accord with Laboratory policy.

12. Source Materials

12.1. Perkin-Elmer Corp., *Analytical Methods for Atomic Absorption Spectroscopy* (Norwalk, CT, 1976).

12.2. Perkin-Elmer Corp., *Instructions: Zeeman/5000 System* (Norwalk, CT, 1982).

12.3. U.S. Environmental Protection Agency, "Methods for Chemical Analysis of Water and Wastes," EPA-600/4-79-020 (rev. March 1983).

12.4. U.S. Environmental Protection Agency, "Test Methods for Evaluation of Solid Waste: Laboratory Manual of Physical and Chemical Methods," SW-846 (Nov. 1986).

12.5. "Chemical, Hazardous, and Mixed Waste," Administrative Requirement 10-3, Chapter 1 in Los Alamos National Laboratory *Environment, Safety, and Health Manual* (most recent edition).

CONTROLLED

EM-9 ANALYTICAL PROCEDURE REVIEW AND APPROVAL

Method: Barium in Water and Soil Extracts — Flame AA

Method No.: EI105 **Revision No.:** 0

Section Leader Charles Oppel **Date:** 11/25/92

Group Leader C. D. [illegible] **Date:** 12/4/92

QA Concurrence Margaret A. Hautier **Date:** 12-2-92

CONTROLLED

CADMIUM IN WATER AND SOIL EXTRACTS – GRAPHITE FURNACE AA

Analyte: Cadmium	**Method No.:** EI120
Matrix: Water, waste water, and soil extracts	**Detection Limit:** 0.1 μg/L
Procedure: Graphite furnace atomic absorption	**Accuracy and Precision:** 102% ± 1.02% RSD
Effective Date: 09/25/91	**Authors:** Michael G. Bell Barbara J. Hemberger

SAFETY NOTE: Before beginning this procedure, read all of the Material Safety Data Sheets for the chemicals listed in Sec. 6. Read Sec. 4.3 of the EM-9 Safety Manual for information on personal protective clothing and equipment. Read Sec. 11 of this procedure and Source Material 12.6 for proper waste disposal practices.

1. Principle of Method

1.1. This procedure is based on Environmental Protection Agency (EPA) method 213.2 and SW846 method 7130.

1.2. Cadmium in solution may be readily determined by graphite furnace atomic absorption spectroscopy. The method is applicable to Cd in drinking, surface, and saline waters and in domestic and industrial wastes.

1.3. Drinking water free of particulate matter may be analyzed directly. Ground water, other aqueous samples, TCLP extracts, industrial wastes, soils, sludges, sediments, and other solid wastes require digestion before analysis.

2. Accuracy and Precision

2.1. The determination of cadmium in 15 in-house quality control samples (5.8 μg/L) over an 8-month period had a mean of 5.9 μg/L and a relative standard deviation (RSD) of 1.02%.

3. Collection and Storage of Samples.

3.1. Preserve samples with nitric acid (HNO_3) at a pH <2.0. Complete analysis within 6 months.

4. Interferences

4.1. Contamination is of prime concern during sample preparation. Periodically clean the work area, including the bench top, to eliminate environmental contamination. Use acid-washed sample cups in the autosampler.

4.2. Chemical interferences can be controlled by the addition of a matrix modifier to all samples and standards. Refer to Perkin-Elmer chart 0993-8199 Rev. D (11/89), or to the PE *Methods of Analysis for AAS* for the appropriate matrix modifier.

4.3. Silica from the glassware will grow into the sample solution during and following sample processing. To control this problem, use disposable sterile 50-mL polypropylene centrifuge tubes in the sample digestion steps.

5. Apparatus

5.1. Centrifuge tubes: 50-mL, sterile polypropylene.

5.2. Rainin pipettes with disposable tips.

5.3. Wash bottles: 125-mL, polypropylene, screw tops.

5.4. Hot plate: with aluminum heating block drilled to hold centrifuge tubes.

5.5. Perkin-Elmer 5000 atomic absorption instrument: equipped with a Zeeman graphite furnace or equivalent.

5.6. Required gas for the above instrument is ultrapure argon.

6. Reagents

6.1. Nitric acid (low-temperature redistilled acid, LTRD).

6.2. Hydrochloric acid (low-temperature redistilled acid, LTRD).

6.3. Double-deionized water.

6.4. ASTM Type I water (>10 MΩ/cm resistivity, <0.1 μmho/cm conductivity).

6.5. Appropriate matrix modifier for all samples, standards, and QCs.

6.6. Secondary standards for making the appropriate standard curves.

CONTROLLED

7. Sample Preparation Procedure

7.1. To determine total recoverable elements in water, waste water, and soil extracts, take a 50-mL aliquot from an acid-preserved sample containing not more than 0.25% (wt/vol) total solids. Place the aliquot in a sterile 50-mL disposable polypropylene centrifuge tube.

7.1.1. Add 500 μL of LTRD HNO_3 and 250 μL of Ultrex or LTRD HCl to each sample.

7.1.2. Heat on a hot plate without boiling (approximately 85°C) until the volume is reduced to 5-10 mL.

7.1.3. Loosely cover the tube with the cap and reflux for 30 min.

7.1.4. Allow the sample to cool, and dilute to 50 mL with ASTM Type I water.

7.1.5. Run one digested blank and one digested spike for each digested batch.

7.1.6. Run a duplicate and a spike for 10-20% of the samples.

7.1.7. For TCLP samples, run a spike for every sample and 20% duplicates.

7.1.8. The analysis should be performed before the EPA regulatory holding times expire.

7.1.9. Add sample and standards to acid-cleaned sample cups.

8. Instrument Procedure

8.1. Instrument power and gases check.

8.1.1. Turn the **POWER** switch to the PE5000 atomic absorption (AA) to **ON**.

8.1.2. Turn **ON** the argon supply valve after checking the pressure at the tank. Pressure must be over 100 psi or the tank must be changed.

8.1.3. Turn the AA switch from **STANDBY** mode to **RUN**.

8.1.4. Make sure the exhaust hood over the graphite furnace is functioning.

8.2. Instrument setup.

8.2.1. Insert the cadmium lamp into the turret oriented toward the ETVAA and plug it in.

8.2.2. Enter **turret lamp number** into keyboard.

8.2.3. Enter recommended **lamp milliamps** (mA) or **watts** depending on lamp type (EDL/HCL).

8.2.3.1. Warm up the EDL and/or HCL lamp for at least 20 min.

8.2.4. Enter **lamp slit width** using **LOW SLIT** key for ETVAA.

8.2.5. Enter **lamp wavelength** using **LAMBDA PEAK** key.

8.2.6. Turn AA switch inside lamp housing to **ICP/ZAA** position.

8.3. Keyboard setup.

8.3.1. Set **SIGNAL** key to **PK AREA** (peak area).

8.3.2. Turn **REC ABS** (record absorbance) signal key **ON**.

8.3.3. Enter **AVG** (average) number (if used).

8.3.4. Enter **CONC MODE** (concentration).

8.4. Furnace setup.

8.4.1. Press **ZAA** key.

8.4.2. Turn **ACCESSORY** knob to **ON** position.

8.4.3. Turn chiller **ON** and check that the water level is above the coils.

8.4.4. Check that the water bottle for distilled water rinse on the autosampler is full.

8.4.5. Turn **ON** the HGA-500 programmer.

8.4.5.1. Enter the temperature program for the element from the ETVAA procedure manual and store the procedure number.

8.5. Computer setup.

8.5.1 Turn PE AA Data System 10 computer **master switch** to **ON**.

8.5.2 Set up ID/WT file.

8.5.3 Turn **print button** on PE5000 keyboard **ON** and store the program.

CONTROLLED

8.6. Set up autosampler.

8.6.1. Recalibrate the standard curve every 8 to 12 samples.

8.6.2. Enter the number of standards (# stds).

8.6.3. Enter the last sample number (last samp).

8.6.4. Enter the sample volume (samp vol).

8.6.5. Enter the alternate volume (alt vol) for the matrix modifier if used.

8.6.6. Enter the instrument program number (inst prog).

8.6.7. Enter the HGA program number (HGA prog).

8.7. Graphite furnace setup.

8.7.1. Open the furnace and clean or replace the graphite tube. Use the tube with or without the platform depending on the element.

8.7.2. If inserting a new tube, condition it with the manual temperature key.

8.7.3. Using the alignment tool, reinsert the graphite tube and close the furnace.

8.7.4. Using the manual temperature key, set the pyrometer to the atomization temperature of the element and balance the lights (red/green) using the calibration (CAL) knob.

8.7.5. Place the AS40 in **STANDBY** mode and align the autosampler arm. Check the depth of the sample delivery inside the tube and inside the samples. Exit **STANDBY** mode.

8.7.6. Remove and check the furnace lenses. Reinsert the lenses and check the absorbance. If the absorbance reads above 0.100, clean the lenses.

8.7.7. Put samples and standards into the autosampler tray and cover with the dust cover to prevent contamination.

8.7.8. Put the matrix modifier in the holder position, if required.

8.7.9. Check the blank and standards manually.

8.7.10. Calculate the characteristic concentration (cc). If it is within ±20% of chart value (0993-8199 Rev. D 11/89) start the run.

8.7.11. Enter **collect data** mode on PE Data System 10 computer and follow instructions.

8.7.12. After run is complete, press to **DISK** key on PE Data System 10 **twice**.

8.7.13. Select **report** mode on the computer, follow instructions, and print out the final report.

8.7.14. When finished, shut off the chiller, argon gas supply, lamps, EDL power supply, and computer.

8.7.15. Place the autosampler, HGA Programmer, and PE5000 in standby mode.

9. Emergency Shutdown Procedure

9.1. In case of power failure, turn **POWER** switch on PE5000 AA to **OFF**.

9.2. Turn **OFF** the gas valves.

9.3. Follow building power failure procedures.

10. Calculations

10.1. Characteristic concentration (cc).

$$cc = \frac{C \times V \times 0.0044}{A_s},$$

where cc = characteristic concentration for ETVAA,
C = concentration of standard,
V = sample aliquot (μL),
A_s = absorbance of standard, and
0.0044 = 1% absorbance.

11. Proper Waste Disposal Practices

11.1. Solid waste.

11.1.1. Solid waste contaminated with hazardous chemicals above the level of concern is not normally generated. This waste can be placed in the usual trash receptacles in the labs at TA-50.

11.1.2. If a solid waste is generated that may be contaminated at a level of concern, the appropriate paperwork is completed on a case-by-case basis.

11.1.2.1. Complete a Waste Profile Request Form (WPRF) describing the solid waste and send it to the Waste Management group for review.

11.1.2.2. If the Waste Management group determines that the solid waste is contaminated below the level of concern, dispose of the waste as ordinary laboratory trash.

11.1.2.3. If the Waste Management group determines that the solid waste is contaminated above the level of concern, request pickup of the contaminated waste as described in Sec. 11.3.

11.2. Liquid waste.

11.2.1. Accumulate liquid waste containing hazardous contaminants, such as solutions of trace metals above the limits posted for dumping at each lab sink at TA-50, in a coated glass jar in a secondary containment tray and keep it segregated from liquid waste contaminated with listed organics or cyanide greater than 0.5 ppm.

11.2.2. Label the bottle with a hazardous waste label, a corrosive label, a toxic label, and a label indicating its use for trace metal waste. Date the label.

11.2.3. Open the bottle only for the time necessary to add waste.

11.2.4. Keep full bottles in the secondary containment tray pending pickup by the Waste Management group.

11.2.5. Label a new bottle for further use.

11.2.6. Dump liquid inorganic wastes which do not contain any EPA-listed components, or which have toxic metals below the limits posted at lab sinks at TA-50, directly into the lab sink.

11.3. Waste pickup.

11.3.1. Request pickup by the Waste Management group of solid waste or a full bottle of liquid waste containing trace metals using the current Chemical Waste Disposal Request Form (CWDR). The current Waste Profile Request Form (WPRF) that describes the waste is referenced on the CWDR.

11.3.2. The Waste Management group picks up the waste for disposal in accord with Laboratory policy.

12. Source Material

12.1. *Analytical Methods for Atomic Absorption Spectrophotometry*, (Perkin-Elmer, Norwalk, Conn., 1976).

12.2. *Instructions: Zeeman/5000 System*, (Perkin-Elmer, Norwalk, Conn., 1982).

12.3. Methods for Chemical Analysis of Water and Wastes, EPA-600/4-79-020 U.S. Environmental Protection Agency, rev. March 1983).

12.4. Perkin-Elmer chart 0993-8199 Rev. D (11/89).

12.5. "Test Methods for Evaluation of Solid Waste: Laboratory Manual of Physical and Chemical Methods," EPA report no. SW-846 (November 1986).

12.6. "Hazardous and Mixed Waste," Administrative Requirement 10-3, in *Environment, Safety, and Health Manual*, Los Alamos National Laboratory Manual, Chapter 1 (most recent edition).

Revisions or additions to the procedure are marked ( ). Where a section heading is marked the entire section has been revised.

CONTROLLED

EM-9 ANALYTICAL PROCEDURE REVIEW AND APPROVAL

Method: Cadmium in Water and Soil Extracts — Graphite Furnace AA

Method No.: EI120 **Revision No.:** 1

Section Leader _____ **Date:** _____

Group Leader _____ **Date:** 5/12/93

QA Concurrence Margaret A. Lautier **Date:** 5-12-93

CONTROLLED

CALCIUM IN WATER AND SOIL EXTRACTS — FLAME AA

Analyte: Calcium	**Method No.:** EI125
Matrix: Water, waste water, and soil extracts	**Detection Limit:** 25 mg/L
Procedure: Flame atomic absorption	**Accuracy and Precision:** not determined
Effective Date: 09/23/91	**Authors:** Michael G. Bell Barbara J. Hemberger

SAFETY NOTE: Before beginning this procedure, read all of the Material Safety Data Sheets for the chemicals listed in Sec. 6. Read Sec. 4.3 of the EM-9 Safety Manual for information on personal protective clothing and equipment. Read Sec. 11 of this procedure and Source Material 12.5 for proper waste disposal practices.

1. Principle of Method

1.1. This procedure is based on Environmental Protection Agency (EPA) method 215.1 and SW-846 method 7140.

1.2. Calcium in solution may be readily determined by atomic absorption spectroscopy (AAS). The method is simple and rapid and is applicable to Ca in drinking, surface, and saline waters and in domestic and industrial wastes.

1.3. Drinking water free of particulate matter may be analyzed directly. Ground water, other aqueous samples, TCLP extracts, industrial wastes, soils, sludges, sediments, and other solid wastes require digestion before analysis.

2. Accuracy and Precision

2.1. The accuracy and precision of the method for in-house quality control samples has not yet been determined.

3. Collection and Storage of Samples

3.1. Preserve samples with nitric acid (HNO_3) at a pH <2.0. Complete analysis within six months.

4. Interferences

4.1. Contamination is of prime concern during sample preparation. The work area, including the bench top, should be periodically cleaned to eliminate environmental contamination.

4.2. Chemical interferences can be controlled by the addition of KCl, a matrix modifier, to all samples and standards at high concentration levels (0.1%).

4.3. Silica from the glassware will grow into the sample solution during and following sample processing. Use sterile disposable 50-mL polypropylene centrifuge tubes in the sample digestion steps to control this problem.

5. Apparatus

5.1. Centrifuge tubes: 50-mL, sterile polypropylene.

5.2. Rainin pipettes with disposable tips.

5.3. Wash bottles: 125-mL, polypropylene, screw tops.

5.4. Hot plate: with aluminum heating block drilled to hold centrifuge tubes.

5.5. Perkin-Elmer 5000 atomic absorption spectrometer or equivalent.

5.6. Gases for the above instrument: air, acetylene, nitrous oxide, argon.

6. Reagents

6.1. Nitric acid (low-temperature redistilled acid, LTRD).

6.2. Hydrochloric acid (low-temperature redistilled acid, LTRD).

6.3. Double-deionized water.

6.4. Potassium chloride. Matrix modifier for all samples and standards.

6.5. ASTM Type I water (>10 MΩ/cm resistivity, <0.1 μmho/cm conductivity).

7. Sample Preparation Procedure

7.1. To determine total recoverable elements in water or waste water, take a 50-mL aliquot from an acid-preserved sample containing not more than 0.25% (wt/vol) total solids. Place the aliquot in a sterile disposable 50-mL polypropylene centrifuge tube.

7.1.1. Add 500 μL of LTRD HNO_3 and 250 μL of Ultrex or LTRD HCl to each sample.

7.1.2. Heat on a hot plate without boiling (approximately 85°C) until the final volume is reduced to 5-10 mL.

7.1.3. Loosely cover the tube with the cap and reflux for 30 min.

7.1.4. Allow the sample to cool and dilute to 50 mL with ASTM Type I water.

7.1.5. Run one digested blank and one digested spike with each digested batch.

7.1.6. Run a duplicate and a spike for 10-20% of the samples.

7.1.7. For TCLP samples, run a spike for every sample and run 20% duplicates.

8. Instrument Procedure

8.1. Power instrument and check gases.

8.1.1. Turn the **POWER** switch on the Perkin-Elmer (PE) 5000 atomic absorption (AA) spectrometer to **ON**.

8.1.2. Turn the **POWER** switch on the PE 5000 automatic burner control to **ON**.

8.1.3. Turn the **AIR SUPPLY** valve **ON**.

8.1.4. Check the pressure in the acetylene tank; if it is <100 psi, change the tank. Turn the **ACETYLENE SUPPLY** valve **ON**.

8.1.5. Turn the **NITROUS OXIDE SUPPLY** valve **ON**, if necessary.

8.1.6. Turn the AA switch from **STANDBY** mode to **RUN**.

8.1.7. Make sure the exhaust hood is functioning.

8.1.8. Make sure the fluids in the drain vessel and drain loop are at their proper levels.

8.2. Instrument setup.

8.2.1. Insert the calcium lamp in the turret and plug it in.

8.2.2. Enter the **turret lamp number** on the keyboard.

8.2.3. Enter the recommended **lamp milliamps** (mA).

8.2.4. Enter the **lamp slit width** using the **HIGH SLIT** key for flame AA.

8.2.5. Enter the **lamp wavelength** using the **LAMBDA PEAK** key.

8.2.6. For **signal keys**, enter the **CONTINUOUS** key for setup.

8.2.7. Press the **RECORD ABSORBANCE** key.

8.2.8. Set the **MODE** key to **ABSORBANCE**.

8.2.9. If the wavelength is >300 nm, use the **AA-MODE** key.

8.2.10. If the wavelength is <300 nm, use the **AA-BG MODE** key.

8.2.11. Press the **SETUP** key and adjust the lamp for maximum absorbance.

8.2.11.1. If the absorbance is >80, press the **GAIN** key and continue the lamp adjustment.

8.2.11.2. When the maximum absorbance is reached, turn the **SETUP** key to **OFF**.

8.2.12. Set the **TIME** key to 0.5 s.

8.2.13. Press the **AZ** (autozero) key. Absorbance should read zero.

8.2.14. Install the 10-cm burner head for air-acetylene analysis and the 5-cm head for nitrous oxide-acetylene.

8.2.15. Adjust the burner head height.

8.2.16. Set oxidant and acetylene flow from Table 8.2 in PE *Analytical Methods for AAS*. (source material 12.1).

8.2.17. Shut the burner shield door and light the flame using the flame **ON/OFF** key on the burner assembly.

8.2.18. Aspirate double-deionized water while the flame is lit.

8.2.19. Aspirate the standard and adjust the instrument for maximum absorbance.

8.3. Running samples.

8.3.1. Enter S1, S2, and S3 as directed for standards in *Analytical Methods for AAS*.

8.3.2. Reset **TIME** key to 3 to 6 s.

8.3.3. Press the signal **HOLD** key.

8.3.4. Select **AVERAGE** key if desired.

8.3.5. Aspirate the known standard and press the **READ** key.

8.3.6. Calculate the characteristic concentration (cc). The result should be within ±20% of the value in *Analytical Methods for AAS*.

8.3.7. Aspirate the calibration-curve standards and read the absorbance.

8.3.8. Switch the **MODE** key to **CONC** (concentration).

8.3.9. Aspirate the standards to set concentration keys as needed.

8.3.10. Read samples and QCs (blind and known).

8.3.11. Recalibrate the instrument with standards every 8 to 12 readings.

8.3.12. When finished, switch the flame **ON/OFF** key to **OFF**. Press the **CHECK FLOW** key on the auto burner control twice to relieve line pressure.

8.3.13. Turn the **POWER** switch on the automatic burner control to **OFF**.

8.3.14. Switch the PE 5000 to **STANDBY** mode.

9. Emergency Shutdown Procedure

9.1. In case of power failure, turn the **POWER** switch on the PE 5000 to **OFF**.

9.2. Turn the gas valves **OFF**.

9.3. Follow procedures for building power failure.

10. Calculations

10.1. Characteristic concentration (cc).

$$cc = \frac{C \times 0.0044}{A_s},$$

where cc = characteristic concentration of flame AA,
C = concentration of standard,
0.0044 = 1% absorbance, and
A_s = absorbance of standard.

11. Proper Waste Disposal Practices

11.1. Solid Waste

11.1.1. Solid waste contaminated with hazardous chemicals above the level of concern is not generated during the routine preparation of QC samples for analysis for inorganic contaminants.

11.1.2. If a solid waste is generated that may be contaminated at a level of concern, the appropriate paperwork is completed on a case-by-case basis.

11.1.2.1. A Waste Profile Request Form (WPRF) describing the solid waste is completed and sent to the Waste Management Group for review.

11.1.2.2. If the Waste Management Group determines that the solid waste is contaminated below the level of concern, the waste is disposed of as ordinary laboratory trash.

11.1.2.3. If the Waste Management Group determines that the solid waste is contaminated above the level of concern, pickup of the contaminated waste is requested as described in Sec. 9.3.

11.2. Liquid Waste

11.2.1. Liquid waste containing hazardous contaminants, such as solutions of trace metals, is accumulated in a coated glass jar in a secondary containment tray and is kept segregated from liquid waste contaminated with organic or radioactive substances or cyanide.

11.2.2. The bottle is labeled with a hazardous waste label and a label indicating its use for trace-metal waste.

11.2.3. The bottle is opened only for the period of time necessary to add waste to it.

11.2.4. When the bottle is full, it is capped and kept in the secondary containment tray pending pickup by the Waste Management Group.

11.2.5. A new bottle is labeled for further use.

11.3. Waste Pickup

11.3.1. Pickup by the Waste Management Group of solid waste or a full bottle of liquid waste containing trace metals is requested using the current Chemical Waste Disposal Request Form (CWDR). The current Waste

Profile Request Form (WPRF) that describes the waste is referenced on the CWDR.

11.3.2. The Waste Management Group picks up the waste for disposal in accord with Laboratory policy.

12. Source Materials

12.1. Perkin-Elmer Corp., *Analytical Methods for Atomic Absorption Spectroscopy* (Norwalk, CT, 1976).

12.2. Perkin-Elmer Corp., *Instructions: Zeeman/5000 System* (Norwalk, CT, 1982).

12.3. U.S. Environmental Protection Agency, "Methods for Chemical Analysis of Water and Wastes," EPA-600/4-79-020 (rev. March 1983).

12.4. U.S. Environmental Protection Agency, "Test Methods for Evaluation of Solid Waste: Laboratory Manual of Physical and Chemical Methods," SW-846 (Nov. 1986).

12.5. "Chemical, Hazardous, and Mixed Waste," Administrative Requirement 10-3, Chapter 1 in Los Alamos National Laboratory *Environment, Safety, and Health Manual* (most recent edition).

CONTROLLED

EM-9 ANALYTICAL PROCEDURE REVIEW AND APPROVAL

Method: Calcium in Water and Soil Extracts — Flame AA

Method No.: EI125 **Revision No.:** 0

Section Leader Charles Apel **Date:** 11/25/92

Group Leader [illegible] **Date:** 12/4/92

QA Concurrence Margaret A. Hautier **Date:** 12-2-92

CONTROLLED

CHROMIUM IN OIL, WATER, AND SOIL EXTRACTS — FLAME AA

Analyte: Chromium	**Method No.:** EI130
Matrix: Oil, water, waste water, and soil extracts	**Detection Limit:** 1.0 mg/L
Procedure: Flame atomic absorption	**Accuracy and Precision:** 100% ± 4.0% RSD
Effective Date: 09/23/91	**Authors:** Michael G. Bell Barbara J. Hemberger

SAFETY NOTE: Before beginning this procedure, read all of the Material Safety Data Sheets for the chemicals listed in Sec. 6. Read Sec. 4.3 of the EM-9 Safety Manual for information on personal protective clothing and equipment. Read Sec. 11 of this procedure and Source Material 12.5 for proper waste disposal practices.

1. Principle of Method

1.1. This procedure is based on Environmental Protection Agency (EPA) method 218.1 and SW-846 method 7190.

1.2. Chromium in solution may be readily determined by atomic absorption spectroscopy (AAS). The method is simple and rapid and is applicable to Cr in drinking, surface, and saline waters and in domestic and industrial wastes.

1.3. Drinking water free of particulate matter may be analyzed directly. Ground water, other aqueous samples, TCLP extracts, industrial wastes, soils, sludges, sediments, and other solid wastes require digestion before analysis. In oil, methyl isobutyl ketone is used as the solvent for samples and standards.

2. Accuracy and Precision

2.1. The determination of chromium in 27 in-house quality control samples (18.6 μg/L) over a 9-month period had a mean of 17.8 μg/L and a relative standard deviation (RSD) of 4.0%.

3. Collection and Storage of Samples

3.1. Preserve samples with nitric acid (HNO_3) at a pH <2.0. Complete analysis within six months.

4. Interferences

4.1. Contamination is of prime concern during sample preparation. The work area, including the bench top, should be periodically cleaned to eliminate environmental contamination.

4.2. Chemical interferences are matrix dependent and can be corrected by the addition of matrix modifiers. Refer to the Perkin-Elmer (PE) Analytical Methods for AAS for appropriate modifier.

4.3. Silica from the glassware will grow into the sample solution during and following sample processing. Use sterile disposable 50-mL polypropylene centrifuge tubes in the sample digestion steps to control this problem.

5. Apparatus

5.1. Centrifuge tubes: 50-mL, sterile polypropylene.

5.2. Rainin pipettes with disposable tips.

5.3. Wash bottles: 125-mL, polypropylene, screw tops.

5.4. Hot plate: with aluminum heating block drilled to hold centrifuge tubes.

5.5. Perkin-Elmer 5000 atomic absorption spectrometer or equivalent.

5.6. Gases for the above instrument: air, acetylene, nitrous oxide, argon.

6. Reagents

6.1. Nitric acid (low-temperature redistilled acid, LTRD).

6.2. Hydrochloric acid (low-temperature redistilled acid, LTRD).

6.3. Double deionized water.

6.4. Methyl isobutyl ketone (MIBK).

6.5. ASTM Type I water (>10 MΩ/cm resistivity, <0.1 μmho/cm conductivity).

7. Sample Preparation Procedure

7.1. To determine total recoverable elements in water or waste water, take a 50-mL aliquot from an acid-preserved sample containing not more than 0.25% (wt/vol) total solids. Place the aliquot in a sterile disposable 50-mL polypropylene centrifuge tube.

7.1.1. Add 500 μL of LTRD HNO_3 and 250 μL of Ultrex or LTRD HCl to each sample.

7.1.2. Heat on a hot plate without boiling (approximately 85°C) until the final volume is reduced to 5-10 mL.

7.1.3. Loosely cover the tube with the cap and reflux for 30 min.

7.1.4. Allow the sample to cool and dilute to 50 mL with ASTM Type I water.

7.1.5. Run one digested blank and one digested spike with each digested batch.

7.1.6. Run a duplicate and a spike for 10-20% of the samples.

7.1.7. For TCLP samples, run a spike for every sample and run 20% duplicates.

8. Instrument Procedure

8.1. Power instrument and check gases.

8.1.1. Turn the **POWER** switch on the Perkin-Elmer (PE) 5000 atomic absorption (AA) spectrometer to **ON**.

8.1.2. Turn the **POWER** switch on the PE 5000 automatic burner control to **ON**.

8.1.3. Turn the **AIR SUPPLY** valve **ON**.

8.1.4. Check the pressure in the acetylene tank; if it is <100 psi, change the tank. Turn the **ACETYLENE SUPPLY** valve **ON**.

8.1.5. Turn the **NITROUS OXIDE SUPPLY** valve **ON**, if necessary.

8.1.6. Turn the AA switch from **STANDBY** mode to **RUN**.

8.1.7. Make sure the exhaust hood is functioning.

8.1.8. Make sure the fluids in the drain vessel and drain loop are at their proper levels.

8.2. Instrument setup.

8.2.1. Insert the chromium lamp in the turret and plug it in.

8.2.2. Enter the **turret lamp number** on the keyboard.

8.2.3. Enter the recommended **lamp milliamps** (mA).

8.2.4. Enter the **lamp slit width** using the **HIGH SLIT** key for flame AA.

8.2.5. Enter the **lamp wavelength** using the **LAMBDA PEAK** key.

8.2.6. For **signal keys**, enter the **CONTINUOUS** key for setup.

8.2.7. Press the **RECORD ABSORBANCE** key.

8.2.8. Set the **MODE** key to **ABSORBANCE**.

8.2.9. If the wavelength is >300 nm, use the **AA-MODE** key.

8.2.10. If the wavelength is <300 nm, use the **AA-BG MODE** key.

8.2.11. Press the **SETUP** key and adjust the lamp for maximum absorbance.

8.2.11.1. If the absorbance is >80, press the **GAIN** key and continue the lamp adjustment.

8.2.11.2. When the maximum absorbance is reached, turn the **SETUP** key to **OFF**.

8.2.12. Set the **TIME** key to 0.5 s.

8.2.13. Press the **AZ** (autozero) key. Absorbance should read zero.

8.2.14. Install the 10-cm burner head for air-acetylene analysis and the 5-cm head for nitrous oxide-acetylene.

8.2.15. Adjust the burner head height.

8.2.16. Set oxidant and acetylene flow from Table 8.2 in PE *Analytical Methods for AAS*. (source material 12.1).

8.2.17. Shut the burner shield door and light the flame using the flame **ON/OFF** key on the burner assembly.

8.2.18. Aspirate double-deionized water while the flame is lit.

8.2.19. Aspirate the standard and adjust the instrument for maximum absorbance.

8.3. Running samples.

8.3.1. Enter S1, S2, and S3 as directed for standards in *Analytical Methods for AAS*.

8.3.2. Reset **TIME** key to 3 to 6 s.

8.3.3. Press the signal **HOLD** key.

8.3.4. Select **AVERAGE** key if desired.

8.3.5. Aspirate the known standard and press the **READ** key.

8.3.6. Calculate the characteristic concentration (cc). The result should be within ±20% of the value in *Analytical Methods for AAS*.

8.3.7. Aspirate the calibration-curve standards and read the absorbance.

8.3.8. Switch the **MODE** key to **CONC** (concentration).

8.3.9. Aspirate the standards to set concentration keys as needed.

8.3.10. Read samples and QCs (blind and known).

8.3.11. Recalibrate the instrument with standards every 8 to 12 readings.

8.3.12. When finished, switch the flame **ON/OFF** key to **OFF**. Press the **CHECK FLOW** key on the auto burner control twice to relieve line pressure.

8.3.13. Turn the **POWER** switch on the automatic burner control to **OFF**.

8.3.14. Switch the PE 5000 to **STANDBY** mode.

9. Emergency Shutdown Procedure

9.1. In case of power failure, turn the **POWER** switch on the PE 5000 to **OFF**.

9.2. Turn the gas valves **OFF**.

9.3. Follow procedures for building power failure.

10. Calculations

10.1. Characteristic concentration (cc).

$$cc = \frac{C \times 0.0044}{A_s},$$

where cc = characteristic concentration for flame AA,
C = concentration of standard,
0.0044 = 1% absorbance, and
A_s = absorbance of standard.

11. Proper Waste Disposal Practices

11.1. Solid Waste

11.1.1. Solid waste contaminated with hazardous chemicals above the level of concern is not generated during the routine preparation of QC samples for analysis for inorganic contaminants.

11.1.2. If a solid waste is generated that may be contaminated at a level of concern, the appropriate paperwork is completed on a case-by-case basis.

11.1.2.1. A Waste Profile Request Form (WPRF) describing the solid waste is completed and sent to the Waste Management Group for review.

11.1.2.2. If the Waste Management Group determines that the solid waste is contaminated below the level of concern, the waste is disposed of as ordinary laboratory trash.

11.1.2.3. If the Waste Management Group determines that the solid waste is contaminated above the level of concern, pickup of the contaminated waste is requested as described in Sec. 9.3.

11.2. Liquid Waste

11.2.1. Liquid waste containing hazardous contaminants, such as solutions of trace metals, is accumulated in a coated glass jar in a secondary containment tray and is kept segregated from liquid waste contaminated with organic or radioactive substances or cyanide.

11.2.2. The bottle is labeled with a hazardous waste label and a label indicating its use for trace-metal waste.

11.2.3. The bottle is opened only for the period of time necessary to add waste to it.

11.2.4. When the bottle is full, it is capped and kept in the secondary containment tray pending pickup by the Waste Management Group.

11.2.5. A new bottle is labeled for further use.

11.3. Waste Pickup

11.3.1. Pickup by the Waste Management Group of solid waste or a full bottle of liquid waste containing trace metals is requested using the current Chemical Waste Disposal Request Form (CWDR). The current Waste Profile Request Form (WPRF) that describes the waste is referenced on the CWDR.

11.3.2. The Waste Management Group picks up the waste for disposal in accord with Laboratory policy.

12. Source Materials

12.1. Perkin-Elmer Corp., *Analytical Methods for Atomic Absorption Spectroscopy* (Norwalk, CT, 1976).

12.2. Perkin-Elmer Corp., *Instructions: Zeeman/5000 System* (Norwalk, CT, 1982).

12.3. U.S. Environmental Protection Agency, "Methods for Chemical Analysis of Water and Wastes," EPA-600/4-79-020 (rev. March 1983).

12.4. U.S. Environmental Protection Agency, "Test Methods for Evaluation of Solid Waste: Laboratory Manual of Physical and Chemical Methods," SW-846 (Nov. 1986).

12.5. "Chemical, Hazardous, and Mixed Waste," Administrative Requirement 10-3, Chapter 1 in Los Alamos National Laboratory *Environment, Safety, and Health Manual* (most recent edition).

CONTROLLED

EM-9 ANALYTICAL PROCEDURE REVIEW AND APPROVAL

Method: Chromium in Water and Soil Extracts — Flame AA

Method No.: EI130 **Revision No.:** 0

Section Leader Charles Cipel **Date:** 11/25/92

Group Leader C. DeL **Date:** 12/4/92

QA Concurrence Margaret A. Gautier **Date:** 12-2-92

CONTROLLED

CHROMIUM IN WATER AND SOIL EXTRACTS – GRAPHITE FURNACE AA

Analyte: Chromium	**Method No.:** EI135
Matrix: Water, waste water, and soil extracts	**Detection Limit:** 1.0 μg/L
Procedure: Graphite furnace atomic absorption	**Accuracy and Precision:** 94% ± 0.9% RSD
Effective Date: 09/25/91	**Authors:** Michael G. Bell Barbara J. Hemberger

SAFETY NOTE: Before beginning this procedure, read all of the Material Safety Data Sheets for the chemicals listed in Sec. 6. Read Sec. 4.3 of the EM-9 Safety Manual for information on personal protective clothing and equipment. Read Sec. 11 of this procedure and Source Material 12.6 for proper waste disposal practices.

1. Principle of Method

1.1. This procedure is based on Environmental Protection Agency (EPA) method 218.2 and SW846 method 7190.

1.2. Chromium in solution may be readily determined by graphite furnace atomic absorption spectroscopy. The method is applicable to Cr in drinking, surface, and saline waters and in domestic and industrial wastes.

1.3. Drinking water free of particulate matter may be analyzed directly. Ground water, other aqueous samples, TCLP extracts, industrial wastes, soils, sludges, sediments, and other solid wastes require digestion before analysis.

2. Accuracy and Precision

2.1. The determination of chromium in 23 in-house quality control samples (18.6 μg/L) over an 8-month period had a mean of 17.4 μg/L and a relative standard deviation (RSD) of 0.9%.

3. Collection and Storage of Samples.

3.1. Preserve samples with nitric acid (HNO_3) at a pH <2.0. Complete analysis within 6 months.

4. Interferences

4.1. Contamination is of prime concern during sample preparation. Periodically clean the work area, including the bench top, to eliminate environmental contamination. Use acid-washed sample cups in the autosampler.

4.2. Chemical interferences can be controlled by the addition of a matrix modifier to all samples and standards. Refer to Perkin-Elmer chart 0993-8199 Rev. D (11/89), or to the PE *Methods of Analysis for AAS*, for the appropriate matrix modifier.

4.3. Silica from the glassware will grow into the sample solution during and following sample processing. To control this problem, use disposable sterile 50-mL polypropylene centrifuge tubes in the sample digestion steps.

5. Apparatus

5.1. Centrifuge tubes: 50-mL, sterile prolypropylene.

5.2. Rainin pipettes with disposable tips.

5.3. Wash bottles: 125-mL, polypropylene, screw tops.

5.4. Hot plate: with aluminum heating block drilled to hold centrifuge tubes.

5.5. Perkin-Elmer 5000 atomic absorption instrument: equipped with a Zeeman graphite furnace or equivalent.

5.6. Required gas for the above instrument is ultrapure argon.

6. Reagents

6.1. Nitric acid (low-temperature redistilled acid, LTRD).

6.2. Hydrochloric acid (low-temperature redistilled acid, LTRD).

6.3. Double-deionized water.

6.4. ASTM Type I water (>10 MΩ/cm resistivity, <0.1 μmho/cm conductivity).

6.5. Appropriate matrix modifier for all samples, standards, and QCs.

7. Sample Preparation Procedure

7.1. To determine total recoverable elements in water, waste water, and soil extracts, take a 50-mL aliquot from an acid-preserved sample containing not more than

0.25% (wt/vol) total solids. Place the aliquot in a sterile 50-mL disposable polypropylene centrifuge tube.

7.1.1. Add 500 μL of LTRD HNO_3 and 250 μL of Ultrex or LTRD HCl to each sample.

7.1.2. Heat on a hot plate without boiling (approximately 85°C) until the volume is reduced to 5-10 mL.

7.1.3. Loosely cover the tube with the cap and reflux for 30 min.

7.1.4. Allow the sample to cool, and dilute to 50 mL with ASTM Type I water.

7.1.5. Run one digested blank and one digested spike for each digested batch.

7.1.6. Run a duplicate and a spike for 10-20% of the samples.

7.1.7. For TCLP samples, run a spike for every sample and 20% duplicates.

7.1.8. The analysis should be performed before the EPA regulatory holding times expire.

7.1.9. Add sample and standards to acid-cleaned sample cups.

8. Instrument Procedure

8.1. Instrument power and gases check.

8.1.1. Turn the **POWER** switch to the PE5000 atomic absorption (AA) to **ON**.

8.1.2. Turn **ON** the argon supply valve after checking the pressure at the tank. Pressure must be over 100 psi or the tank must be changed.

8.1.3. Turn the AA switch from **STANDBY** mode to **RUN**.

8.1.4. Make sure the exhaust hood over the graphite furnace is functioning.

8.2. Instrument setup.

8.2.1. Insert the chromium lamp into the turret facing ETVAA and plug it in.

8.2.2. Enter **turret lamp number** into keyboard.

8.2.3. Enter recommended **lamp milliamps** (mA) or **watts** depending on lamp type (EDL/HCL).

8.2.3.1. Warm up the EDL and/or HCL lamp for at least 20 min.

8.2.4. Enter **lamp slit width** using **LOW SLIT** key for ETVAA.

8.2.5. Enter **lamp wavelength** using **LAMBDA PEAK** key.

8.2.6. Turn AA switch inside lamp housing to **ICP/ZAA** position.

8.3. Keyboard setup.

8.3.1. Set **SIGNAL** key to **PK AREA** (peak area).

8.3.2. Turn **REC ABS** (record absorbance) signal key **ON**.

8.3.3. Enter **AVG** (average) number (if used).

8.3.4. Enter **CONC MODE** (concentration).

8.4. Furnace setup.

8.4.1. Press **ZAA** key.

8.4.2. Turn **ACCESSORY** knob to **ON** position.

8.4.3. Turn chiller **ON** and check that the water level is above the coils.

8.4.4. Check that the water bottle for distilled water rinse on the autosampler is full.

8.4.5. Turn **ON** the HGA-500 programmer.

8.4.5.1. Enter the temperature program for the element from the ETVAA procedure manual and store the procedure number.

8.5. Computer setup.

8.5.1. Turn PE AA Data System 10 computer **master switch** to **ON**.

8.5.2. Set up ID/WT file.

8.5.3. Turn **print button** on PE5000 keyboard **ON** and store the program.

8.6. Set up autosampler.

8.6.1. Recalibrate the standard curve every 8 to 12 samples.

8.6.2. Enter the number of standards (# stds).

8.6.3. Enter the last sample number (last samp).

8.6.4. Enter the sample volume (samp vol).

8.6.5. Enter the alternate volume (alt vol) for the matrix modifier if used.

8.6.6. Enter the instrument program number (inst prog).

8.6.7. Enter the HGA program number (HGA prog).

8.7. Graphite furnace setup.

8.7.1. Open the furnace and clean or replace the graphite tube. Use the tube with or without the platform depending on the element.

8.7.2. If inserting a new tube, condition it with the manual temperature key.

8.7.3. Using the alignment tool, reinsert the graphite tube and close the furnace.

8.7.4. Using the manual temperature key, set the pyrometer to the atomization temperature of the element and balance the lights (red/green) using the calibration (CAL) knob.

8.7.5. Place the AS40 in **STANDBY** mode and align the autosampler arm. Check the depth of sample delivery inside tube and inside samples. Exit **STANDBY** mode.

8.7.6. Remove and check the furnace lenses. Reinsert the lenses and check the absorbance. If the absorbance reads above 0.1, clean the lenses.

8.7.7. Put samples and standards into the autosampler tray and cover with the dust cover to prevent contamination.

8.7.8. Put the matrix modifier in the holder position, if required.

8.7.9. Check the blank and standards manually.

8.7.10. Calculate the characteristic concentration (cc). If it is within ±20% of chart value start the run.

8.7.11. Enter **collect data** mode on PE Data System 10 computer and follow instructions.

8.7.12. After run is complete, press to **DISK** on PE Data System 10 twice.

8.7.13. Select **report** mode on the computer, follow instructions, and print out the final report.

8.7.14. When finished, shut off the chiller, argon gas supply, lamps, EDL power supply, and computer.

8.7.15. Place the autosampler, HGA Programmer, and PE5000 in standby mode.

9. Emergency Shutdown Procedure

9.1. In case of power failure, turn **POWER** switch on PE5000 AA to **OFF**.

9.2. Turn **OFF** the gas valves.

9.3. Follow building power failure procedures.

10. Calculations

10.1. Characteristic concentration (cc).

$$cc = \frac{C \times V \times 0.0044}{A_s},$$

where cc = characteristic concentration for ETVAA,
C = concentration of standard (μg/L),
V = sample aliquot (μL),
A_s = absorbance of standard, and
0.0044 = 1% absorbance.

11. Proper Waste Disposal Practices

11.1. Solid waste.

11.1.1. Solid waste contaminated with hazardous chemicals above the level of concern is not normally generated. This waste can be placed in the usual trash receptacles in the labs at TA-50.

11.1.2. If a solid waste is generated that may be contaminated at a level of concern, the appropriate paperwork is completed on a case-by-case basis.

11.1.2.1. Complete a Waste Profile Request Form (WPRF) describing the solid waste and send it to the Waste Management group for review.

11.1.2.2. If the Waste Management group determines that the solid waste is contaminated below the level of concern, dispose of the waste as ordinary laboratory trash.

11.1.2.3. If the Waste Management group determines that the solid waste is contaminated above the level of concern, request pickup of the contaminated waste as described in Sec. 11.3.

11.2. Liquid waste.

11.2.1. Accumulate liquid waste containing hazardous contaminants, such as solutions of trace metals above the limits posted for dumping at each lab sink at TA-50, in a coated glass jar in a secondary containment tray and keep it segregated from liquid waste contaminated with listed organics or cyanide greater than 0.5 ppm.

11.2.2. Label the bottle with a hazardous waste label, a corrosive label, a toxic label, and a label indicating its use for trace metal waste. Date the label.

11.2.3. Open the bottle only for the time necessary to add waste.

11.2.4. Keep full bottles in the secondary containment tray pending pickup by the Waste Management group.

11.2.5. Label a new bottle for further use.

11.2.6. Dump liquid inorganic wastes which do not contain any EPA-listed components, or which have toxic metals below the limits posted at lab sinks at TA-50, directly into the lab sink.

11.3. Waste pickup.

11.3.1. Request pickup by the Waste Management group of solid waste or a full bottle of liquid waste containing trace metals using the current Chemical Waste Disposal Request Form (CWDR). The current Waste Profile Request Form (WPRF) that describes the waste is referenced on the CWDR.

11.3.2. The Waste Management group picks up the waste for disposal in accord with Laboratory policy.

12. Source Material

12.1. *Analytical Methods for Atomic Absorption Spectrophotometry*, (Perkin-Elmer, Norwalk, Conn., 1976).

12.2. *Instructions: Zeeman/5000 System*, (Perkin-Elmer, Norwalk, Conn., 1982).

12.3. Methods for Chemical Analysis of Water and Wastes, EPA-600/4-79-020 U.S. Envrionmental Protection Agency, (rev. March 1983).

12.4. Perkin-Elmer chart 0993-8199 Rev. D (11/89).

12.5. "Test Methods for Evaluation of Solid Waste Laboratory Manual of Physical and Chemical Methods," EPA report no. SW-846 (November 1986).

12.6. "Hazardous and Mixed Waste," Administrative Requirement 10-3, in *Environment, Safety, and Health Manual*, Los Alamos National Laboratory Manual, Chapter 1 (most recent edition).

Revisions or additions to the procedure are marked (▒▒▒▒). Where a section heading is marked the entire section has been revised.

CONTROLLED

EM-9 ANALYTICAL PROCEDURE REVIEW AND APPROVAL

Method: Chromium in Water and Soil Extracts — Graphite Furnace AA

Method No.: EI135 **Revision No.:** 1

Section Leader [illegible] **Date:** [illegible]

Group Leader [illegible] **Date:** 5/12/93

QA Concurrence Margaret A. Santiw **Date:** 5-12-93

CONTROLLED

COPPER IN WATER AND SOIL EXTRACTS — FLAME AA

Analyte: Copper	**Method No.:** EI140
Matrix: Water, waste water, and soil extracts	**Detection Limit:** 10 μg/L
Procedure: Flame atomic absorption	**Accuracy and Precision:** 100% ± 2.1% RSD
Effective Date: 09/23/91	**Authors:** Michael G. Bell Barbara J. Hemberger

SAFETY NOTE: Before beginning this procedure, read all of the Material Safety Data Sheets for the chemicals listed in Sec. 6. Read Sec. 4.3 of the EM-9 Safety Manual for information on personal protective clothing and equipment. Read Sec. 11 of this procedure and Source Material 12.5 for proper waste disposal practices.

1. Principle of Method

1.1. This procedure is based on Environmental Protection Agency (EPA) method 220.1 and SW-846 method 7210.

1.2. Copper in solution may be readily determined by atomic absorption spectroscopy (AAS). The method is simple and rapid and is applicable to Cu in drinking, surface, and saline waters and in domestic and industrial wastes.

1.3. Drinking water free of particulate matter may be analyzed directly. Ground water, other aqueous samples, TCLP extracts, industrial wastes, soils, sludges, sediments, and other solid wastes require digestion prior to analysis.

2. Accuracy and Precision

2.1. The determination of copper in 20 in-house quality control samples (21.9 μg/L) over a 9-month period had a mean of 21.2 μg/L and a relative standard deviation (RSD) of 2.1%.

3. Collection and Storage of Samples

3.1. Preserve samples with nitric acid (HNO_3) at a pH <2.0. Complete analysis within six months.

4. Interferences

4.1. Contamination is of prime concern during sample preparation. The work area, including the bench top, should be periodically cleaned to eliminate environmental contamination.

4.2. Chemical interferences are matrix dependent.

4.3. Silica from the glassware will grow into the sample solution during and following sample processing. Use sterile disposable 50-mL polypropylene centrifuge tubes in the sample digestion steps to control this problem.

5. Apparatus

5.1. Centrifuge tubes: 50-mL, sterile polypropylene.

5.2. Rainin pipettes with disposable tips.

5.3. Wash bottles: 125-mL, polypropylene, screw tops.

5.4. Hot plate: with aluminum heating block drilled to hold centrifuge tubes.

5.5. Perkin-Elmer 5000 atomic absorption spectrometer or equivalent.

5.6. Gases for the above instrument: air, acetylene, nitrous oxide, argon.

6. Reagents

6.1. Nitric acid (low-temperature redistilled acid, LTRD).

6.2. Hydrochloric acid (low-temperature redistilled acid, LTRD).

6.3. Double-deionized water.

6.4. ASTM Type I water (>10 MΩ/cm resistivity, <0.1 μmho/cm conductivity).

7. Sample Preparation Procedure

7.1. To determine total recoverable elements in water or waste water, take a 50-mL aliquot from an acid-preserved sample containing not more than 0.25% (wt/vol) total solids. Place the aliquot in a sterile disposable 50-mL polypropylene centrifuge tube.

7.1.1. Add 500 μL of LTRD HNO_3 and 250 μL of Ultrex or LTRD HCl to each sample.

7.1.2. Heat on a hot plate without boiling (approximately 85°C) until the final volume is reduced to 5-10 mL.

7.1.3. Loosely cover the tube with the cap and reflux for 30 min.

7.1.4. Allow the sample to cool and dilute to 50 mL with ASTM Type I water.

7.1.5. Run one digested blank and one digested spike with each digested batch.

7.1.6. Run a duplicate and a spike for 10-20% of the samples.

7.1.7. For TCLP samples, run a spike for every sample and run 20% duplicates.

8. Instrument Procedure

8.1. Power instrument and check gases.

8.1.1. Turn the **POWER** switch on the Perkin-Elmer (PE) 5000 atomic absorption (AA) spectrometer to **ON**.

8.1.2. Turn the **POWER** switch on the PE 5000 automatic burner control to **ON**.

8.1.3. Turn the **AIR SUPPLY** valve **ON**.

8.1.4. Check the pressure in the acetylene tank; if it is <100 psi, change the tank. Turn the **ACETYLENE SUPPLY** valve **ON**.

8.1.5. Turn the **NITROUS OXIDE SUPPLY** valve **ON**, if necessary.

8.1.6. Turn the AA switch from **STANDBY** mode to **RUN**.

8.1.7. Make sure the exhaust hood is functioning.

8.1.8. Make sure the fluids in the drain vessel and drain loop are at their proper levels.

8.2. Instrument setup.

8.2.1. Insert the copper lamp in the turret and plug it in.

8.2.2. Enter the **turret lamp number** on the keyboard.

8.2.3. Enter the recommended **lamp milliamps** (mA).

8.2.4. Enter the **lamp slit width** using the **HIGH SLIT** key for flame AA.

8.2.5. Enter the **lamp wavelength** using the **LAMBDA PEAK** key.

8.2.6. For **signal keys**, enter the **CONTINUOUS** key for setup.

8.2.7. Press the **RECORD ABSORBANCE** key.

8.2.8. Set the **MODE** key to **ABSORBANCE**.

8.2.9. If the wavelength is >300 nm, use the **AA-MODE** key.

8.2.10. If the wavelength is <300 nm, use the **AA-BG MODE** key.

8.2.11. Press the **SETUP** key and adjust the lamp for maximum absorbance.

8.2.11.1. If the absorbance is >80, press the **GAIN** key and continue the lamp adjustment.

8.2.11.2. When the maximum absorbance is reached, turn the **SETUP** key to **OFF**.

8.2.12. Set the **TIME** key to 0.5 s.

8.2.13. Press the **AZ** (autozero) key. Absorbance should read zero.

8.2.14. Install the 10-cm burner head for air-acetylene analysis and the 5-cm head for nitrous oxide-acetylene.

8.2.15. Adjust the burner head height.

8.2.16. Set oxidant and acetylene flow from Table 8.2 in PE *Analytical Methods for AAS*. (source material 12.1).

8.2.17. Shut the burner shield door and light the flame using the flame **ON/OFF** key on the burner assembly.

8.2.18. Aspirate double-deionized water while the flame is lit.

8.2.19. Aspirate the standard and adjust the instrument for maximum absorbance.

8.3. Running samples.

8.3.1. Enter S1, S2, and S3 as directed for standards in *Analytical Methods for AAS*.

8.3.2. Reset **TIME** key to 3 to 6 s.

8.3.3. Press the signal **HOLD** key.

8.3.4. Select **AVERAGE** key if desired.

8.3.5. Aspirate the known standard and press the **READ** key.

8.3.6. Calculate the characteristic concentration (cc). The result should be within ±20% of the value in *Analytical Methods for AAS*.

8.3.7. Aspirate the calibration-curve standards and read the absorbance.

8.3.8. Switch the **MODE** key to **CONC** (concentration).

8.3.9. Aspirate the standards to set concentration keys as needed.

8.3.10. Read samples and QCs (blind and known).

8.3.11. Recalibrate the instrument with standards every 8 to 12 readings.

8.3.12. When finished, switch the flame **ON/OFF** key to **OFF**. Press the **CHECK FLOW** key on the auto burner control twice to relieve line pressure.

8.3.13. Turn the **POWER** switch on the automatic burner control to **OFF**.

8.3.14. Switch the PE 5000 to **STANDBY** mode.

9. Emergency Shutdown Procedure

9.1. In case of power failure, turn the **POWER** switch on the PE 5000 to **OFF**.

9.2. Turn the gas valves **OFF**.

9.3. Follow procedures for building power failure.

10. Calculations

10.1. Characteristic concentration (cc).

$$cc = \frac{C \times 0.0044}{A_s},$$

where cc = characteristic concentration for flame AA,
C = concentration of standard,
0.0044 = 1% absorbance, and
A_s = absorbance of standard.

11. Proper Waste Disposal Practices

11.1. Solid Waste

11.1.1. Solid waste contaminated with hazardous chemicals above the level of concern is not generated during the routine preparation of QC samples for analysis for inorganic contaminants.

11.1.2. If a solid waste is generated that may be contaminated at a level of concern, the appropriate paperwork is completed on a case-by-case basis.

11.1.2.1. A Waste Profile Request Form (WPRF) describing the solid waste is completed and sent to the Waste Management Group for review.

11.1.2.2. If the Waste Management Group determines that the solid waste is contaminated below the level of concern, the waste is disposed of as ordinary laboratory trash.

11.1.2.3. If the Waste Management Group determines that the solid waste is contaminated above the level of concern, pickup of the contaminated waste is requested as described in Sec. 9.3.

11.2. Liquid Waste

11.2.1. Liquid waste containing hazardous contaminants, such as solutions of trace metals, is accumulated in a coated glass jar in a secondary containment tray and is kept segregated from liquid waste contaminated with organic or radioactive substances or cyanide.

11.2.2. The bottle is labeled with a hazardous waste label and a label indicating its use for trace-metal waste.

11.2.3. The bottle is opened only for the period of time necessary to add waste to it.

11.2.4. When the bottle is full, it is capped and kept in the secondary containment tray pending pickup by the Waste Management Group.

11.2.5. A new bottle is labeled for further use.

11.3. Waste Pickup

11.3.1. Pickup by the Waste Management Group of solid waste or a full bottle of liquid waste containing trace metals is requested using the current Chemical Waste Disposal Request Form (CWDR). The current Waste

Profile Request Form (WPRF) that describes the waste is referenced on the CWDR.

11.3.2. The Waste Management Group picks up the waste for disposal in accord with Laboratory policy.

12. Source Materials

12.1. Perkin-Elmer Corp., *Analytical Methods for Atomic Absorption Spectroscopy* (Norwalk, CT, 1976).

12.2. Perkin-Elmer Corp., *Instructions: Zeeman/5000 System* (Norwalk, CT, 1982).

12.3. U.S. Environmental Protection Agency, "Methods for Chemical Analysis of Water and Wastes," EPA-600/4-79-020 (rev. March 1983).

12.4. U.S. Environmental Protection Agency, "Test Methods for Evaluation of Solid Waste: Laboratory Manual of Physical and Chemical Methods," SW-846 (Nov. 1986).

12.5. "Chemical, Hazardous, and Mixed Waste," Administrative Requirement 10-3, Chapter 1 in Los Alamos National Laboratory *Environment, Safety, and Health Manual* (most recent edition)

CONTROLLED

EM-9 ANALYTICAL PROCEDURE REVIEW AND APPROVAL

Method: Copper in Water and Soil Extracts — Flame AA

Method No.: EI140 **Revision No.:** 0

Section Leader Charles Capel **Date:** 11/25/92

Group Leader [illegible] **Date:** 12/4/92

QA Concurrence Margaret A. Gautier **Date:** 12-2-92

CONTROLLE

IRON IN WATER AND SOIL EXTRACTS — FLAME AA

Analyte: Iron	**Method No.:** EI145
Matrix: Water, waste water, and soil extracts	**Detection Limits:** 20 μg/L
Procedure: Flame atomic absorption	**Accuracy and Precision:** 100% ± 8.7% RSD
Effective Date: 09/23/91	**Authors:** Michael G. Bell Barbara J. Hemberger

SAFETY NOTE: Before beginning this procedure, read all of the Material Safety Data Sheets for the chemicals listed in Sec. 6. Read Sec. 4.3 of the EM-9 Safety Manual for information on personal protective clothing and equipment. Read Sec. 11 of this procedure and Source Material 12.5 for proper waste disposal practices.

1. Principle of Method

1.1. This procedure is based on Environmental Protection Agency (EPA) method 236.1 and SW-846 method 7380.

1.2. Iron in solution may be readily determined by atomic absorption spectroscopy (AAS). The method is simple and rapid and is applicable to Fe in drinking, surface, and saline waters and in domestic and industrial wastes.

1.3. Drinking water free of particulate matter may be analyzed directly. Ground water, other aqueous samples, TCLP extracts, industrial wastes, soils, sludges, sediments, and other solid wastes require digestion prior to analysis.

2. Accuracy and Precision

2.1. The determination of iron in 24 in-house quality control samples (99 μg/L) over a 9-month period had a mean of 107.3 μg/L and a relative standard deviation (RSD) of 8.7%.

3. Collection and Storage of Samples

3.1. Preserve samples with nitric acid (HNO_3) at a pH <2.0. Complete analysis within six months.

4. Interferences

4.1. Contamination is of prime concern during sample preparation. The work area, including the bench top, should be periodically cleaned to eliminate environmental contamination.

4.2. Chemical interferences are matrix dependent.

4.3. Silica from the glassware will grow into the sample solution during and following sample processing. Use sterile disposable 50-mL polypropylene centrifuge tubes in the sample digestion steps to control this problem.

5. Apparatus

5.1. Centrifuge tubes: 50-mL, sterile polypropylene.

5.2. Rainin pipettes with disposable tips.

5.3. Wash bottles: 125-mL, polypropylene, screw tops.

5.4. Hot plate: with aluminum heating block drilled to hold centrifuge tubes.

5.5. Perkin-Elmer 5000 atomic absorption spectrometer or equivalent.

5.6. Gases for the above instrument: air, acetylene, nitrous oxide, argon.

6. Reagents

6.1. Nitric acid (low-temperature redistilled acid, LTRD).

6.2. Hydrochloric acid (low-temperature redistilled acid, LTRD).

6.3. Double deionized water.

6.4. ASTM Type I water (>10 MΩ/cm resistivity, <0.1 μmho/cm conductivity).

7. Sample Preparation Procedure

7.1. To determine total recoverable elements in water or waste water, take a 50-mL aliquot from an acid-preserved sample containing not more than 0.25% (wt/vol) total solids. Place the aliquot in a sterile disposable 50-mL polypropylene centrifuge tube.

7.1.1. Add 500 μL of LTRD HNO_3 and 250 μL of Ultrex or LTRD HCl to each sample.

7.1.2. Heat on a hot plate without boiling (approximately 85°C) until the final volume is reduced to 5-10 mL.

7.1.3. Loosely cover the tube with the cap and reflux for 30 min.

7.1.4. Allow the sample to cool and dilute to 50 mL with ASTM Type I water.

7.1.5. Run one digested blank and one digested spike with each digested batch.

7.1.6. Run a duplicate and a spike for 10-20% of the samples.

7.1.7. For TCLP samples, run a spike for every sample and run 20% duplicates.

8. Instrument Procedure

8.1. Power instrument and check gases.

8.1.1. Turn the **POWER** switch on the Perkin-Elmer (PE) 5000 atomic absorption (AA) spectrometer to **ON**.

8.1.2. Turn the **POWER** switch on the PE 5000 automatic burner control to **ON**.

8.1.3. Turn the **AIR SUPPLY** valve **ON**.

8.1.4. Check the pressure in the acetylene tank; if it is <100 psi, change the tank. Turn the **ACETYLENE SUPPLY** valve **ON**.

8.1.5. Turn the **NITROUS OXIDE SUPPLY** valve **ON**, if necessary.

8.1.6. Turn the AA switch from **STANDBY** mode to **RUN**.

8.1.7. Make sure the exhaust hood is functioning.

8.1.8. Make sure the fluids in the drain vessel and drain loop are at their proper levels.

8.2. Instrument setup.

8.2.1. Insert the iron lamp in the turret and plug it in.

8.2.2. Enter the **turret lamp number** on the keyboard.

8.2.3. Enter the recommended **lamp milliamps** (mA).

8.2.4. Enter the **lamp slit width** using the **HIGH SLIT** key for flame AA.

8.2.5. Enter the **lamp wavelength** using the **LAMBDA PEAK** key.

8.2.6. For **signal keys**, enter the **CONTINUOUS** key for setup.

8.2.7. Press the **RECORD ABSORBANCE** key.

8.2.8. Set the **MODE** key to **ABSORBANCE**.

8.2.9. If the wavelength is >300 nm, use the **AA-MODE** key.

8.2.10. If the wavelength is <300 nm, use the **AA-BG MODE** key.

8.2.11. Press the **SETUP** key and adjust the lamp for maximum absorbance.

8.2.11.1. If the absorbance is >80, press the **GAIN** key and continue the lamp adjustment.

8.2.11.2. When the maximum absorbance is reached, turn the **SETUP** key to **OFF**.

8.2.12. Set the **TIME** key to 0.5 s.

8.2.13. Press the **AZ** (autozero) key. Absorbance should read zero.

8.2.14. Install the 10-cm burner head for air-acetylene analysis and the 5-cm head for nitrous oxide-acetylene.

8.2.15. Adjust the burner head height.

8.2.16. Set oxidant and acetylene flow from Table 8.2 in PE *Analytical Methods for AAS*. (source material 12.1).

8.2.17. Shut the burner shield door and light the flame using the flame **ON/OFF** key on the burner assembly.

8.2.18. Aspirate double-deionized water while the flame is lit.

8.2.19. Aspirate the standard and adjust the instrument for maximum absorbance.

8.3. Running samples.

8.3.1. Enter S1, S2, and S3 as directed for standards in *Analytical Methods for AAS*.

8.3.2. Reset **TIME** key to 3 to 6 s.

8.3.3. Press the signal **HOLD** key.

8.3.4. Select **AVERAGE** key if desired.

8.3.5. Aspirate the known standard and press the **READ** key.

8.3.6. Calculate the characteristic concentration (cc). The result should be within ±20% of the value in *Analytical Methods for AAS*.

8.3.7. Aspirate the calibration-curve standards and read the absorbance.

8.3.8. Switch the **MODE** key to **CONC** (concentration).

8.3.9. Aspirate the standards to set concentration keys as needed.

8.3.10. Read samples and QCs (blind and known).

8.3.11. Recalibrate the instrument with standards every 8 to 12 readings.

8.3.12. When finished, switch the flame **ON/OFF** key to **OFF**. Press the **CHECK FLOW** key on the auto burner control twice to relieve line pressure.

8.3.13. Turn the **POWER** switch on the automatic burner control to **OFF**.

8.3.14. Switch the PE 5000 to **STANDBY** mode.

9. Emergency Shutdown Procedure

9.1. In case of power failure, turn the **POWER** switch on the PE 5000 to **OFF**.

9.2. Turn the gas valves **OFF**.

9.3. Follow procedures for building power failure.

10. Calculations

10.1. Characteristic concentration (cc).

$$cc = \frac{C \times 0.0044}{A_s},$$

where cc = characteristic concentration for flame AA,
C = concentration of standard,
0.0044 = 1% absorbance, and
A_s = absorbance of standard.

11. Proper Waste Disposal Practices

11.1. Solid Waste

11.1.1. Solid waste contaminated with hazardous chemicals above the level of concern is not generated during the routine preparation of QC samples for analysis for inorganic contaminants.

11.1.2. If a solid waste is generated that may be contaminated at a level of concern, the appropriate paperwork is completed on a case-by-case basis.

11.1.2.1. A Waste Profile Request Form (WPRF) describing the solid waste is completed and sent to the Waste Management Group for review.

11.1.2.2. If the Waste Management Group determines that the solid waste is contaminated below the level of concern, the waste is disposed of as ordinary laboratory trash.

11.1.2.3. If the Waste Management Group determines that the solid waste is contaminated above the level of concern, pickup of the contaminated waste is requested as described in Sec. 9.3.

11.2. Liquid Waste

11.2.1. Liquid waste containing hazardous contaminants, such as solutions of trace metals, is accumulated in a coated glass jar in a secondary containment tray and is kept segregated from liquid waste contaminated with organic or radioactive substances or cyanide.

11.2.2. The bottle is labeled with a hazardous waste label and a label indicating its use for trace-metal waste.

11.2.3. The bottle is opened only for the period of time necessary to add waste to it.

11.2.4. When the bottle is full, it is capped and kept in the secondary containment tray pending pickup by the Waste Management Group.

11.2.5. A new bottle is labeled for further use.

11.3. Waste Pickup

11.3.1. Pickup by the Waste Management Group of solid waste or a full bottle of liquid waste containing trace metals is requested using the current Chemical Waste Disposal Request Form (CWDR). The current Waste

CONTROLLED

Profile Request Form (WPRF) that describes the waste is referenced on the CWDR.

11.3.2. The Waste Management Group picks up the waste for disposal in accord with Laboratory policy.

12. Source Materials

12.1. Perkin-Elmer Corp., *Analytical Methods for Atomic Absorption Spectroscopy* (Norwalk, CT, 1976).

12.2. Perkin-Elmer Corp., *Instructions: Zeeman/5000 System* (Norwalk, CT, 1982).

12.3. U.S. Environmental Protection Agency, "Methods for Chemical Analysis of Water and Wastes," EPA-600/4-79-020 (rev. March 1983).

12.4. U.S. Environmental Protection Agency, "Test Methods for Evaluation of Solid Waste: Laboratory Manual of Physical and Chemical Methods," SW-846 (Nov. 1986).

12.5. "Chemical, Hazardous, and Mixed Waste," Administrative Requirement 10-3, Chapter 1 in Los Alamos National Laboratory *Environment, Safety, and Health Manual* (most recent edition).

CONTROLLED

EM-9 ANALYTICAL PROCEDURE REVIEW AND APPROVAL

Method: Iron in Water and Soil Extracts — Flame AA

Method No.: EI145 **Revision No.:** 0

Section Leader Charles Grant **Date:** 11/25/92

Group Leader [illegible] **Date:** 12/4/92

QA Concurrence Margaret A. Gautier **Date:** 12-2-92

CONTROLLED

LEAD IN WATER AND SOIL EXTRACTS – GRAPHITE FURNACE AA

Analyte: Lead	**Method No.:** EI150
Matrix: Water, waste water, and soil extracts	**Detection Limit:** 2.0 μg/L
Procedure: Graphite furnace atomic absorption	**Accuracy and Precision:** 99.6% ± 1.0% RSD
Effective Date: 09/25/91	**Authors:** Michael G. Bell Barbara J. Hemberger

SAFETY NOTE: Before beginning this procedure, read all of the Material Safety Data Sheets for the chemicals listed in Sec. 6. Read Sec. 4.3 of the EM-9 Safety Manual for information on personal protective clothing and equipment. Read Sec. 11 of this procedure and Source Material 12.6 for proper waste disposal practices.

1. Principle of Method

1.1. This procedure is based on Environmental Protection Agency (EPA) method 239.2 and SW846 method 7421.

1.2. Lead in solution may be readily determined by graphite furnace atomic absorption spectroscopy. The method is applicable to Pb in drinking, surface, and saline waters and in domestic and industrial wastes.

1.3. Drinking water free of particulate matter may be analyzed directly. Ground water, other aqueous samples, TCLP extracts, industrial wastes, soils, sludges, sediments, and other solid wastes require digestion before analysis.

2. Accuracy and Precision

2.1. The determination of lead in 12 in-house quality control samples (72.0 μg/L) over an 8-month period had a mean of 71.7 μg/L and a relative standard deviation (RSD) of 1.0%.

3. Collection and Storage of Samples

3.1. Preserve samples with nitric acid (HNO_3) at a pH <2.0. Complete analysis within 6 months.

4. Interferences

4.1. Contamination is of prime concern during sample preparation. Periodically clean the work area, including the bench top, to eliminate environmental contamination. Use acid-washed sample cups in the autosampler.

4.2. Chemical interferences can be controlled by the addition of a matrix modifier to all samples and standards. Refer to Perkin Elmer chart 0993-8199 Rev. D (11/89), or to the PE *Methods of Analysis for AAS*, for the appropriate matrix modifier.

4.3. Silica from the glassware will grow into the sample solution during and following sample processing. To control this problem, use disposable sterile 50-mL polypropylene centrifuge tubes in the sample digestion steps.

5. Apparatus

5.1. Centrifuge tubes: 50-mL, sterile polypropylene.

5.2. Rainin pipettes with disposable tips.

5.3. Wash bottles: 125-mL, polypropylene, screw tops.

5.4. Hot plate: with aluminum heating block drilled to hold centrifuge tubes.

5.5. Perkin-Elmer 5000 atomic absorption instrument: equipped with a Zeeman graphite furnace or equivalent.

5.6. Required gas for the above instrument is ultrapure argon.

6. Reagents

6.1. Nitric acid (low-temperature redistilled acid, LTRD).

6.2. Hydrochloric acid (low-temperature redistilled acid, LTRD).

6.3. Double-deionized water.

6.4. ASTM Type I water (>10 MΩ/cm resistivity, <0.1 μmho/cm conductivity).

6.5. Appropriate matrix modifier for all samples, standards, and QCs.

6.6. Secondary standards for making the appropriate standard curves.

7. Sample Preparation Procedure

7.1. To determine total recoverable elements in water, waste water, and soil extracts, take a 50-mL aliquot from an acid preserved sample containing not more than 0.25% (wt/vol) total solids. Place the aliquot in a sterile 50-mL disposable polypropylene centrifuge tube.

7.1.1. Add 500 μL of LTRD HNO_3 and 250 μL of Ultrex or LTRD HCl to each sample.

7.1.2. Heat on a hot plate without boiling (approximately 85°C) until the volume is reduced to 5-10 mL.

7.1.3. Loosely cover the tube with the cap and reflux for 30 min.

7.1.4. Allow the sample to cool, and dilute to 50 mL with ASTM Type I water.

7.1.5. Run one digested blank and one digested spike for each digested batch.

7.1.6. Run a duplicate and a spike for 10-20% of the samples.

7.1.7. For TCLP samples, run a spike for every sample and 20% duplicates.

7.1.8. The analysis should be performed before the EPA regulatory holding times expire.

7.1.9. Add sample and standards to acid-cleaned sample cups.

8. Instrument Procedure

8.1. Instrument power and gases check.

8.1.1. Turn the **POWER** switch to the PE5000 atomic absorption (AA) to **ON**.

8.1.2. Turn **ON** the argon supply valve after checking the pressure at the tank. Pressure must be over 100 psi or the tank must be changed.

8.1.3. Turn the AA switch from **STANDBY** mode to **RUN**.

8.1.4. Make sure the exhaust hood over the graphite furnace is functioning.

8.2. Instrument setup.

8.2.1. Insert the lead lamp into the turret oriented toward the ETVAA and plug it in.

8.2.2. Enter **turret lamp number** into keyboard.

8.2.3. Enter recommended **lamp milliamps** (mA) or **watts** depending on lamp type (EDL/HCL).

8.2.3.1. Warm up the EDL and/or HCL lamp for at least 20 min.

8.2.4. Enter **lamp slit width** using **LOW SLIT** key for ETVAA.

8.2.5. Enter **lamp wavelength** using **LAMBDA PEAK** key.

8.2.6. Turn AA switch inside lamp housing to **ICP/ZAA** position.

8.3. Keyboard setup.

8.3.1. Set **SIGNAL** key to **PK AREA** (peak area).

8.3.2. Turn **REC ABS** (record absorbance) signal key **ON**.

8.3.3. Enter **AVG** (average) number (if used).

8.3.4. Enter **CONC MODE** (concentration).

8.4. Furnace setup.

8.4.1. Press **ZAA** key.

8.4.2. Turn **ACCESSORY** knob to **ON** position.

8.4.3. Turn chiller **ON** and check that the water level is above the coils.

8.4.4. Check that the water bottle for distilled water rinse on the autosampler is full.

8.4.5. Turn **ON** the HGA-500 programmer.

8.4.5.1. Enter the temperature program for the element from the ETVAA procedure manual and store the procedure number.

8.5. Computer setup.

8.5.1 Turn PE AA Data System 10 computer **master switch** to **ON**.

8.5.2 Set up ID/WT file.

8.5.3 Turn **print button** on PE5000 keyboard **ON** and store the program.

8.6. Set up autosampler.

8.6.1. Recalibrate the standard curve every 8 to 12 samples.

8.6.2. Enter the number of standards (# stds).

8.6.3. Enter the last sample number (last samp).

8.6.4. Enter the sample volume (samp vol).

8.6.5. Enter the alternate volume (alt vol) for the matrix modifier if used.

8.6.6. Enter the instrument program number (inst prog).

8.6.7. Enter the HGA program number (HGA prog).

8.7. Graphite furnace setup.

8.7.1. Open the furnace and clean or replace the graphite tube. Use the tube with or without the platform depending on the element.

8.7.2. If inserting a new tube, condition it with the manual temperature key.

8.7.3. Using the alignment tool, reinsert the graphite tube and close the furnace.

8.7.4. Using the manual temperature key, set the pyrometer to the atomization temperature of the element and balance the lights (red/green) using the calibration (CAL) knob.

8.7.5. Place the AS40 in **STANDBY** mode and align the autosampler arm. Check the depth of the sample delivery inside the tube and inside the samples. Exit **STANDBY** mode.

8.7.6. Remove and check the furnace lenses. Reinsert the lenses and check the absorbance. If the absorbance reads above 0.100, clean the lenses.

8.7.7. Put samples and standards into the autosampler tray and cover with the dust cover to prevent contamination.

8.7.8. Put the matrix modifier in the holder position, if required.

8.7.9. Check the blank and standards manually.

8.7.10. Calculate the characteristic concentration (cc). If it is within ±20% of chart value (0993-8199 Rev. D 11/89) start the run.

8.7.11. Enter **collect data** mode on PE Data System 10 computer and follow instructions.

8.7.12. After run is complete, press **DISK** key on PE Data System 10 **twice**.

8.7.13. Select **report** mode on the computer, follow instructions, and print out the final report.

8.7.14. When finished, shut off the chiller, argon gas supply, lamps, EDL power supply, and computer.

8.7.15. Place the autosampler, HGA Programmer, and PE5000 in standby mode.

9. Emergency Shutdown Procedure

9.1. In case of power failure, turn **POWER** switch on PE5000 AA to **OFF**.

9.2. Turn **OFF** the gas valves.

9.3. Follow building power failure procedures.

10. Calculations

10.1. Characteristic concentration (cc).

$$cc = \frac{C \times V \times 0.0044}{A_s},$$

where cc = characteristic concentration for ETVAA,
C = concentration of standard (μg/L),
V = sample aliquot (μL),
A_s = absorbance of standard, and
0.0044 = 1% absorbance.

11. Proper Waste Disposal Practices

11.1. Solid waste.

11.1.1. Solid waste contaminated with hazardous chemicals above the level of concern is not normally generated. This waste can be placed in the usual trash receptacles in the labs at TA-50.

11.1.2. If a solid waste is generated that may be contaminated at a level of concern, the appropriate paperwork is completed on a case-by-case basis.

11.1.2.1. Complete a Waste Profile Request Form (WPRF) describing the solid waste and send it to the Waste Management group for review.

11.1.2.2. If the Waste Management group determines that the solid waste is contaminated below the level of concern, dispose of the waste as ordinary laboratory trash.

11.1.2.3. If the Waste Management group determines that the solid waste is contaminated above the level of concern, request pickup of the contaminated waste as described in Sec. 11.3.

11.2. Liquid waste.

11.2.1. Accumulate liquid waste containing hazardous contaminants, such as solutions of trace metals above the limits posted for dumping at each lab sink at TA-50, in a coated glass jar in a secondary containment tray and keep it segregated from liquid waste contaminated with listed organics or cyanide greater than 0.5 ppm.

11.2.2. Label the bottle with a hazardous waste label, a corrosive label, a toxic label, and a label indicating its use for trace metal waste. Date the label.

11.2.3. Open the bottle only for the time necessary to add waste.

11.2.4. Keep full bottles in the secondary containment tray pending pickup by the Waste Management group.

11.2.5. Label a new bottle for further use.

11.2.6. Dump liquid inorganic wastes which do not contain any EPA-listed components, or which have toxic metals below the limits posted at lab sinks at TA-50, directly into the lab sink.

11.3. Waste pickup.

11.3.1. Request pickup by the Waste Management group of solid waste or a full bottle of liquid waste containing trace metals using the current Chemical Waste Disposal Request Form (CWDR). The current Waste Profile Request Form (WPRF) that describes the waste is referenced on the CWDR.

11.3.2. The Waste Management group picks up the waste for disposal in accord with Laboratory policy.

12. Source Material

12.1. *Analytical Methods for Atomic Absorption Spectrophotometry*, (Perkin-Elmer, Norwalk, Conn., 1976).

12.2. *Instructions: Zeeman/5000 System*, (Perkin-Elmer, Norwalk, Conn., 1982).

12.3. Methods for Chemical Analysis of Water and Wastes, EPA-600/4-79-020 U.S. Environmental Protection Agency, (rev. March 1983).

12.4. Perkin-Elmer chart 0993-8199 Rev. D (11/89).

12.5. "Test Methods for Evaluation of Solid Waste: Laboratory Manual of Physical and Chemical Methods," EPA report no. SW-846 (November 1986).

12.6. "Hazardous and Mixed Waste," Administrative Requirement 10-3, in *Environment, Safety, and Health Manual*, Los Alamos National Laboratory Manual, Chapter 1 (most recent edition).

Revisions or additions to the procedure are marked ( ). Where a section heading is marked the entire section has been revised.

CONTROLLED

EM-9 ANALYTICAL PROCEDURE REVIEW AND APPROVAL

Method: Lead in Water and Soil Extracts — Graphite Furnace AA

Method No.: EI150 **Revision No.:** 1

Section Leader _____ **Date:** _____

Group Leader _____ **Date:** 5/12/93

QA Concurrence Margaret A. Gartner **Date:** 5-12-93

CONTROLLE

MAGNESIUM IN WATER AND SOIL EXTRACTS – FLAME AA

Analyte: Magnesium	**Method No.:** EI160
Matrix: Water, waste water, and soil extracts	**Detection Limit:** 250 μg/L
Procedure: Flame atomic absorption	**Accuracy and Precision:** not determined
Effective Date: 09/23/91	**Authors:** Michael G. Bell Barbara J. Hemberger

SAFETY NOTE: Before beginning this procedure, read all of the Material Safety Data Sheets for the chemicals listed in Sec. 6. Read Sec. 4.3 of the EM-9 Safety Manual for information on personal protective clothing and equipment. Read Sec. 11 of this procedure and Source Material 12.5 for proper waste disposal practices.

1. Principle of Method

1.1. This procedure is based on Environmental Protection Agency (EPA) method 242.1 and SW-846 method 7050.

1.2. Magnesium in solution may be readily determined by atomic absorption spectroscopy. The method is simple and rapid and is applicable to Mg in drinking, surface, and saline waters and in domestic and industrial wastes.

1.3. Drinking water free of particulate matter may be analyzed directly. Ground water, other aqueous samples, TCLP extracts, industrial wastes, soils, sludges, sediments, and other solid wastes require digestion prior to analysis.

2. Accuracy and Precision

2.1. The accuracy and precision of the method for in-house quality control samples has not yet been determined.

3. Collection and Storage of Samples

3.1. Preserve samples with nitric acid (HNO_3) at a pH <2.0. Complete analysis within six months.

4. Interferences

4.1. Contamination is of prime concern during sample preparation. The work area, including the bench top, should be periodically cleaned to eliminate environmental contamination.

4.2. Chemical interferences can be controlled by the addition of KCl, a matrix modifier, to all samples and standards at high concentration levels (0.1%).

4.3. Silica from the glassware will grow into the sample solution during and following sample processing. Use sterile disposable 50-mL polypropylene centrifuge tubes in the sample digestion steps to control this problem.

5. Apparatus

5.1. Centrifuge tubes: 50-mL, sterile polypropylene.

5.2. Rainin pipettes with disposable tips.

5.3. Wash bottles: 125-mL, polypropylene, screw tops.

5.4. Hot plate: with aluminum heating block drilled to hold centrifuge tubes.

5.5. Perkin-Elmer 5000 atomic absorption spectrometer or equivalent.

5.6. Gases for the above instrument: air, acetylene, nitrous oxide, argon.

6. Reagents

6.1. Nitric acid (low-temperature redistilled acid, LTRD).

6.2. Hydrochloric acid (low-temperature redistilled acid, LTRD).

6.3. Double-deionized water.

6.4. Potassium chloride. Matrix modifier for all samples and standards.

6.5. ASTM Type I water (>10 MΩ/cm resistivity, <0.1 μmho/cm conductivity).

7. Sample Preparation Procedure

7.1. To determine total recoverable elements in water or waste water, take a 50-mL aliquot from an acid-preserved sample containing not more than 0.25% (wt/vol) total solids. Place the aliquot in a sterile disposable 50-mL polypropylene centrifuge tube.

7.1.1. Add 500 μL of LTRD HNO_3 and 250 μL of Ultrex or LTRD HCl to each sample.

7.1.2. Heat on a hot plate without boiling (approximately 85°C) until the final volume is reduced to 5-10 mL.

7.1.3. Loosely cover the tube with the cap and reflux for 30 min.

7.1.4. Allow the sample to cool and dilute to 50 mL with ASTM Type I water.

7.1.5. Run one digested blank and one digested spike with each digested batch.

7.1.6. Run a duplicate and a spike for 10-20% of the samples.

7.1.7. For TCLP samples, run a spike for every sample and run 20% duplicates.

8. Instrument Procedure

8.1. Power instrument and check gases.

8.1.1. Turn the **POWER** switch on the Perkin-Elmer (PE) 5000 atomic absorption (AA) spectrometer to **ON**.

8.1.2. Turn the **POWER** switch on the PE 5000 automatic burner control to **ON**.

8.1.3. Turn the **AIR SUPPLY** valve **ON**.

8.1.4. Check the pressure in the acetylene tank; if it is <100 psi, change the tank. Turn the **ACETYLENE SUPPLY** valve **ON**.

8.1.5. Turn the **NITROUS OXIDE SUPPLY** valve **ON**, if necessary.

8.1.6. Turn the AA switch from **STANDBY** mode to **RUN**.

8.1.7. Make sure the exhaust hood is functioning.

8.1.8. Make sure the fluids in the drain vessel and drain loop are at their proper levels.

8.2. Instrument setup.

8.2.1. Insert the magnesium lamp in the turret and plug it in.

8.2.2. Enter the **turret lamp number** on the keyboard.

8.2.3. Enter the recommended **lamp milliamps** (mA).

8.2.4. Enter the **lamp slit width** using the **HIGH SLIT** key for flame AA.

8.2.5. Enter the **lamp wavelength** using the **LAMBDA PEAK** key.

8.2.6. For **signal keys**, enter the **CONTINUOUS** key for setup.

8.2.7. Press the **RECORD ABSORBANCE** key.

8.2.8. Set the **MODE** key to **ABSORBANCE**.

8.2.9. If the wavelength is >300 nm, use the **AA-MODE** key.

8.2.10. If the wavelength is <300 nm, use the **AA-BG MODE** key.

8.2.11. Press the **SETUP** key and adjust the lamp for maximum absorbance.

8.2.11.1. If the absorbance is >80, press the **GAIN** key and continue the lamp adjustment.

8.2.11.2. When the maximum absorbance is reached, turn the **SETUP** key to **OFF**.

8.2.12. Set the **TIME** key to 0.5 s.

8.2.13. Press the **AZ** (autozero) key. Absorbance should read zero.

8.2.14. Install the 10-cm burner head for air-acetylene analysis and the 5-cm head for nitrous oxide-acetylene.

8.2.15. Adjust the burner head height.

8.2.16. Set oxidant and acetylene flow from Table 8.2 in PE *Analytical Methods for AAS*. (source material 12.1).

8.2.17. Shut the burner shield door and light the flame using the flame **ON/OFF** key on the burner assembly.

8.2.18. Aspirate double-deionized water while the flame is lit.

8.2.19. Aspirate the standard and adjust the instrument for maximum absorbance.

8.3. Running samples.

8.3.1. Enter S1, S2, and S3 as directed for standards in *Analytical Methods for AAS*.

8.3.2. Reset **TIME** key to 3 to 6 s.

8.3.3. Press the signal **HOLD** key.

8.3.4. Select **AVERAGE** key if desired.

8.3.5. Aspirate the known standard and press the **READ** key.

8.3.6. Calculate the characteristic concentration (cc). The result should be within ±20% of the value in *Analytical Methods for AAS*.

8.3.7. Aspirate the calibration-curve standards and read the absorbance.

8.3.8. Switch the **MODE** key to **CONC** (concentration).

8.3.9. Aspirate the standards to set concentration keys as needed.

8.3.10. Read samples and QCs (blind and known).

8.3.11. Recalibrate the instrument with standards every 8 to 12 readings.

8.3.12. When finished, switch the flame **ON/OFF** key to **OFF**. Press the **CHECK FLOW** key on the auto burner control twice to relieve line pressure.

8.3.13. Turn the **POWER** switch on the automatic burner control to **OFF**.

8.3.14. Switch the PE 5000 to **STANDBY** mode.

9. Emergency Shutdown Procedure

9.1. In case of power failure, turn the **POWER** switch on the PE 5000 to **OFF**.

9.2. Turn the gas valves **OFF**.

9.3. Follow procedures for building power failure.

10. Calculations

10.1. Characteristic concentration (cc).

$$cc = \frac{C \times 0.0044}{A_s},$$

where cc = characteristic concentration of flame AA,
C = concentration of standard,
0.0044 = 1% absorbance, and
A_s = absorbance of standard.

11. Proper Waste Disposal Practices

11.1. Solid Waste

11.1.1. Solid waste contaminated with hazardous chemicals above the level of concern is not generated during the routine preparation of QC samples for analysis for inorganic contaminants.

11.1.2. If a solid waste is generated that may be contaminated at a level of concern, the appropriate paperwork is completed on a case-by-case basis.

11.1.2.1. A Waste Profile Request Form (WPRF) describing the solid waste is completed and sent to the Waste Management Group for review.

11.1.2.2. If the Waste Management Group determines that the solid waste is contaminated below the level of concern, the waste is disposed of as ordinary laboratory trash.

11.1.2.3. If the Waste Management Group determines that the solid waste is contaminated above the level of concern, pickup of the contaminated waste is requested as described in Sec. 9.3.

11.2. Liquid Waste

11.2.1. Liquid waste containing hazardous contaminants, such as solutions of trace metals, is accumulated in a coated glass jar in a secondary containment tray and is kept segregated from liquid waste contaminated with organic or radioactive substances or cyanide.

11.2.2. The bottle is labeled with a hazardous waste label and a label indicating its use for trace-metal waste.

11.2.3. The bottle is opened only for the period of time necessary to add waste to it.

11.2.4. When the bottle is full, it is capped and kept in the secondary containment tray pending pickup by the Waste Management Group.

11.2.5. A new bottle is labeled for further use.

11.3. Waste Pickup

11.3.1. Pickup by the Waste Management Group of solid waste or a full bottle of liquid waste containing trace metals is requested using the current Chemical Waste Disposal Request Form (CWDR). The current Waste

CONTROLLE

Profile Request Form (WPRF) which describes the waste is referenced on the CWDR.

11.3.2. The Waste Management Group picks up the waste for disposal in accord with Laboratory policy.

12. Source Materials

12.1. Perkin-Elmer Corp., *Analytical Methods for Atomic Absorption Spectroscopy* (Norwalk, CT, 1976).

12.2. Perkin-Elmer Corp., *Instructions: Zeeman/5000 System* (Norwalk, CT, 1982).

12.3. U.S. Environmental Protection Agency, "Methods for Chemical Analysis of Water and Wastes," EPA-600/4-79-020 (rev. March 1983).

12.4. U.S. Environmental Protection Agency, "Test Methods for Evaluation of Solid Waste: Laboratory Manual of Physical and Chemical Methods," SW-846 (Nov. 1986).

12.5. "Chemical, Hazardous, and Mixed Waste," Administrative Requirement 10-3, Chapter 1 in Los Alamos National Laboratory *Environment, Safety, and Health Manual* (most recent edition).

CONTROLLED

EM-9 ANALYTICAL PROCEDURE REVIEW AND APPROVAL

Method: Magnesium in Water and Soil Extracts — Flame AA

Method No.: EI160 **Revision No.:** 0

Section Leader _____ **Date:** 11/25/92

Group Leader _____ **Date:** 12/4/92

QA Concurrence Margaret A. Gautier **Date:** 12-2-92

CONTROLLED

ZINC IN WATER AND SOIL EXTRACTS — FLAME AA

Analyte: Zinc	**Method No.:** EI165
Matrix: Water, waste water, and soil extracts	**Detection Limit:** 5.0 μg/L
Procedure: Flame atomic absorption	**Accuracy and Precision:** 100% ± 4.0% RSD
Effective Date: 09/23/91	**Authors:** Michael G. Bell Barbara J. Hemberger

SAFETY NOTE: Before beginning this procedure, read all of the Material Safety Data Sheets for the chemicals listed in Sec. 6. Read Sec. 4.3 of the EM-9 Safety Manual for information on personal protective clothing and equipment. Read Sec. 11 of this procedure and Source Material 12.5 for proper waste disposal practices.

1. Principle of Method

1.1. This procedure is based on Environmental Protection Agency (EPA) method 289.1 and SW-846 method 7950.

1.2. Zinc in solution may be readily determined by atomic absorption spectroscopy. The method is simple and rapid and is applicable to drinking, surface, and saline waters and in domestic and industrial wastes.

1.3. Drinking water free of particulate matter may be analyzed directly. Ground water, other aqueous samples, TCLP extracts, industrial wastes, soils, sludges, sediments, and other solid wastes require digestion before analysis.

2. Accuracy and Precision

2.1. The determination of zinc in nine in-house quality control samples (66 μg/L) over a nine-month period had a mean of 67.2 μg/L and a relative standard deviation (RSD) of 4.0%.

3. Collection and Storage of Samples

3.1. Preserve samples with nitric acid (HNO_3) at a pH <2.0. Complete analysis within six months.

4. Interferences

4.1. Contamination is of prime concern during sample preparation. The work area, including the bench top, should be periodically cleaned to eliminate environmental contamination.

4.2. Chemical interferences are matrix dependent.

4.3. Silica from glassware will grow into the sample solution during and following sample processing. Use sterile disposable 50-mL polypropylene centrifuge tubes in the sample digestion steps to control this problem.

5. Apparatus

5.1. Centrifuge tubes: 50-mL, sterile polypropylene.

5.2. Rainin pipettes with disposable tips.

5.3. Wash bottles: 125-mL, polypropylene, screw tops.

5.4. Hot plate: with aluminum heating block drilled to hold centrifuge tubes.

5.5. Perkin-Elmer 5000 atomic absorption spectrometer or equivalent.

5.6. Gases for the above instrument: air, acetylene, nitrous oxide, argon.

6. Reagents

6.1. Nitric acid (low-temperature redistilled acid, LTRD).

6.2. Hydrochloric acid (low-temperature redistilled acid, LTRD).

6.3. Double-deionized water.

6.4. ASTM Type I water (>10 MΩ/cm resistivity, <0.1 μmho/cm conductivity).

7. Sample Preparation Procedure

7.1. To determine total recoverable elements in water or waste water, take a 50-mL aliquot from an acid-preserved sample containing not more than 0.25% (wt/vol) total solids. Place the aliquot in a sterile disposable 50-mL polypropylene centrifuge tube.

7.1.1. Add 500 μL of LTRD HNO_3 and 250 μL of Ultrex or LTRD HCl to each sample.

7.1.2. Heat on a hot plate without boiling (approximately 85°C) until the final volume is reduced to 5-10 mL.

7.1.3. Loosely cover the tube with the cap and reflux for 30 min.

7.1.4. Allow the sample to cool and dilute to 50 mL with ASTM Type I water.

7.1.5. Run one digested blank and one digested spike with each digested batch.

7.1.6. Run a duplicate and a spike for 10-20% of the samples.

7.1.7. For TCLP samples, run a spike for every sample and run 20% duplicates.

8. Instrument Procedure

8.1. Power instrument and check gases.

8.1.1. Turn the **POWER** switch on the Perkin-Elmer (PE) 5000 atomic absorption (AA) spectrometer to **ON**.

8.1.2. Turn the **POWER** switch on the PE 5000 automatic burner control to **ON**.

8.1.3. Turn **ON** the air supply valve.

8.1.4. Check the pressure in the acetylene tank; if it is <100 psi, change the tank. Turn the **ACETYLENE SUPPLY** valve **ON**.

8.1.5. Turn **ON** the nitrous oxide supply valve, if necessary.

8.1.6. Turn the AA switch from **STANDBY** mode to **RUN**.

8.1.7. Make sure the exhaust hood is functioning.

8.1.8. Check the drain vessel and drain loop for fluid levels.

8.2. Instrument setup.

8.2.1. Insert the zinc lamp in the turret and plug it in.

8.2.2. Enter the **turret lamp number** on the keyboard.

8.2.3. Enter the recommended **lamp milliamps** (mA).

8.2.4. Enter the **lamp slit width** using the **HIGH SLIT** key for flame AA.

8.2.5. Enter the **lamp wavelength** using the **LAMBDA PEAK** key.

8.2.6. For **signal keys**, enter the **CONTINUOUS** key for setup.

8.2.7. Press the **RECORD ABSORBANCE** key.

8.2.8. Set the **MODE** key to **ABSORBANCE**.

8.2.9. If the wavelength is >300 nm, use the **AA-MODE** key.

8.2.10. If the wavelength is <300 nm, use the **AA-BG MODE** key.

8.2.11. Press the **SETUP** key and adjust the lamp for maximum absorbance.

8.2.11.1. If the absorbance is >80, press the **GAIN** key and continue the lamp adjustment.

8.2.11.2. When the maximum absorbance is reached, turn the **SETUP** key to **OFF**.

8.2.12. Set the **TIME** key to 0.5 s.

8.2.13. Press the **AZ** (autozero) key. Absorbance should read zero.

8.2.14. Install the 10-cm burner head for air-acetylene analysis and the 5-cm head for nitrous oxide-acetylene.

8.2.15. Adjust the burner head height.

8.2.16. Set oxidant and acetylene flow from Table 8.2 in PE *Analytical Methods for AAS*. (source material 12.1).

8.2.17. Shut the burner shield door and light the flame using the flame **ON/OFF** key on the burner assembly.

8.2.18. Aspirate double-deionized water while the flame is lit.

8.2.19. Aspirate the standard and adjust the instrument for maximum absorbance.

8.3. Running samples.

8.3.1. Enter S1, S2, and S3 as directed for standards in *Analytical Methods for AAS*.

8.3.2. Reset **TIME** key to 3 to 6 s.

8.3.3. Press the signal **HOLD** key.

8.3.4. Select **AVERAGE** key if desired.

8.3.5. Aspirate the known standard and press the **READ** key.

8.3.6. Calculate the characteristic concentration (cc). The result should be within ±20% of the value in *Analytical Methods for AAS*.

8.3.7. Aspirate the calibration-curve standards and read the absorbance.

8.3.8. Switch the **MODE** key to **CONC** (concentration).

8.3.9. Aspirate the standards to set concentration keys as needed.

8.3.10. Read samples and QCs (blind and known).

8.3.11. Recalibrate the instrument with standards every 8 to 12 readings.

8.3.12. When finished, press flame **ON/OFF** key to **OFF** to turn off the flame. Turn fuel and air values to **OFF**.

8.3.12.1. Press the **CHECK FLOW** key **twice** on the auto burner control to relieve line pressure.

8.3.13. Turn the power switch to the auto burner control off.

8.3.14. Switch the PE 5000 to **STANDBY** mode.

9. Emergency Shutdown Procedure

9.1. In case of power failure, turn the **POWER** switch on the PE 5000 to **OFF**.

9.2. Turn off the gas valves.

9.3. Follow procedures for building power failure.

10. Calculations

10.1. Characteristic concentration (cc).

$$cc = \frac{C \times 0.0044}{A_s},$$

where cc = characteristic concentration for flame AA,
C = concentration of standard,
0.0044 = 1% absorbance, and
A_s = absorbance of standard.

11. Proper Waste Disposal Practices

11.1. Solid waste.

11.1.1. Solid waste contaminated with hazardous chemicals above the level of concern is not normally generated during the routine preparation of QC samples for analysis for inorganic contaminants.

11.1.2. If a solid waste is generated that may be contaminated at a level of concern, the appropriate paperwork is completed on a case-by-case basis.

11.1.2.1. A Waste Profile Request Form (WPRF) describing the solid waste is completed and sent to the Waste Management group for review.

11.1.2.2. If the Waste Management group determines that the solid waste is contaminated below the level of concern, the waste is disposed of as ordinary laboratory trash.

11.1.2.3. If the Waste Management group determines that the solid waste is contaminated above the level of concern, pickup of the contaminated waste is requested as described in Sec. 11.3.

11.2. Liquid waste.

11.2.1. Liquid waste containing hazardous contaminants, such as solutions of trace metals, is accumulated in a coated glass jar in a secondary containment tray and is kept segregated from liquid waste contaminated with organic or radioactive substances or cyanide.

11.2.2. The bottle is labeled with a hazardous waste label and a label indicating its use for trace-metal waste.

11.2.3. The bottle is opened only for the time necessary to add waste to it.

11.2.4. When the bottle is full, it is capped and kept in the secondary containment tray pending pickup by the Waste Management group.

11.2.5. A new bottle is labeled for further use.

11.3. Waste pickup.

11.3.1. Pickup by the Waste Management group of solid waste or a full bottle of liquid waste containing trace metals is requested using the current Chemical Waste Disposal Request Form (CWDR). The current Waste

CONTROLLED

Profile Request Form (WPRF) that describes the waste is referenced on the CWDR.

11.3.2. The Waste Management group picks up the waste for disposal in accord with Laboratory policy.

12. Source Materials

12.1. Perkin-Elmer Corp., *Analytical Methods for Atomic Absorption Spectroscopy* (Norwalk, CT, 1976).

12.2. Perkin-Elmer Corp., *Instructions: Zeeman/5000 System* (Norwalk, CT, 1982).

12.3. U.S. Environmental Protection Agency, "Methods for Chemical Analysis of Water and Wastes," EPA-600/4-79-0[illegible] (rev. March 1983).

12.4. U.S. Environmental Protection Agency, "Test Methods for Evaluation of Solid Waste: Laboratory Manual of Physical and Chemical Methods," SW-846 (Nov. 1986).

12.5. "Chemical, Hazardous, and Mixed Waste," Administrative Requirement 10-3, Chapter 1 in Los Alamos National Laboratory *Environment, Safety, and Health Manual* (most recent edition).

CONTROLLED

NICKEL IN WATER AND SOIL EXTRACTS — FLAME AA

Analyte: Nickel	**Method No.:** EI170
Matrix: Water, waste water, and soil extracts	**Detection Limit:** 15μg/L
Procedure: Flame atomic absorption	**Accuracy and Precision:** 100% ± 5% RSD
Effective Date: 09/23/91	**Authors:** Michael G. Bell Barbara J. Hemberger

SAFETY NOTE: Before beginning this procedure, read all of the Material Safety Data Sheets for the chemicals listed in Sec. 6. Read Sec. 4.3 of the EM-9 Safety Manual for information on personal protective clothing and equipment. Read Sec. 11 of this procedure and Source Material 12.5 for proper waste disposal practices.

1. Principle of Method

1.1. This procedure is based on Environmental Protection Agency (EPA) method 249.1 and SW-846 method 7520.

1.2. Nickel in solution may be readily determined by atomic absorption spectroscopy (AAS). The method is simple and rapid and is applicable to Ni in drinking, surface, and saline waters and in domestic and industrial wastes.

1.3. Drinking water free of particulate matter may be analyzed directly. Ground water, other aqueous samples, TCLP extracts, industrial wastes, soils, sludges, sediments, and other solid wastes require digestion prior to analysis.

2. Accuracy and Precision

2.1. The determination of nickel in 15 in-house quality control samples (800 μg/L) over a 9-month period had a mean of 841 μg/L and a relative standard deviation (RSD) of 5%.

3. Collection and Storage of Samples

3.1. Preserve samples with nitric acid (HNO_3) at a pH <2.0. Complete analysis within six months.

4. Interferences

4.1. Contamination is of prime concern during sample preparation. The work area, including the bench top, should be periodically cleaned to eliminate environmental contamination.

4.2. Chemical interferences are matrix dependent.

4.3. Silica from the glassware will grow into the sample solution during and following sample processing. Use sterile disposable 50-mL polypropylene centrifuge tubes in the sample digestion steps to control this problem.

5. Apparatus

5.1. Centrifuge tubes: 50-mL, sterile polypropylene.

5.2. Rainin pipettes with disposable tips.

5.3. Wash bottles: 125-mL, polypropylene, screw tops.

5.4. Hot plate: with aluminum heating block drilled to hold centrifuge tubes.

5.5. Perkin-Elmer 5000 atomic absorption spectrometer or equivalent.

5.6. Gases for the above instrument: air, acetylene, nitrous oxide, argon.

6. Reagents

6.1. Nitric acid (low-temperature redistilled acid, LTRD).

6.2. Hydrochloric acid (low-temperature redistilled acid, LTRD).

6.3. Double-deionized water.

6.4. ASTM Type I water (>10 MΩ/cm resistivity, <0.1 μmho/cm conductivity).

7. Sample Preparation Procedure

7.1. To determine total recoverable elements in water or waste water, take a 50-mL aliquot from an acid-preserved sample containing not more than 0.25% (wt/vol) total solids. Place the aliquot in a sterile disposable 50-mL polypropylene centrifuge tube.

7.1.1. Add 500 μL of LTRD HNO_3 and 250 μL of Ultrex or LTRD HCl to each sample.

7.1.2. Heat on a hot plate without boiling (approximately 85°C) until the final volume is reduced to 5-10 mL.

7.1.3. Loosely cover the tube with the cap and reflux for 30 min.

7.1.4. Allow the sample to cool and then dilute to 50 mL with ASTM Type I water.

7.1.5. Run one digested blank and one digested spike with each digested batch.

7.1.6. Run a duplicate and a spike for 10-20% of the samples.

7.1.7. For TCLP samples, run a spike for every sample and run 20% duplicates.

8. Instrument Procedure

8.1. Power instrument and check gases.

8.1.1. Turn the **POWER** switch on the Perkin-Elmer (PE) 5000 atomic absorption (AA) spectrometer to **ON**.

8.1.2. Turn the **POWER** switch on the PE 5000 automatic burner control to **ON**.

8.1.3. Turn the **AIR SUPPLY** valve **ON**.

8.1.4. Check the pressure in the acetylene tank; if it is <100 psi, change the tank. Turn the **ACETYLENE SUPPLY** valve **ON**.

8.1.5. Turn the **NITROUS OXIDE SUPPLY** valve **ON**, if necessary.

8.1.6. Turn the AA switch from **STANDBY** mode to **RUN**.

8.1.7. Make sure the exhaust hood is functioning.

8.1.8. Make sure the fluids in the drain vessel and drain loop are at their proper levels.

8.2. Instrument setup.

8.2.1. Insert the nickel lamp in the turret and plug it in.

8.2.2. Enter the **turret lamp number** on the keyboard.

8.2.3. Enter the recommended **lamp milliamps** (mA).

8.2.4. Enter the **lamp slit width** using the **HIGH SLIT** key for flame AA.

8.2.5. Enter the **lamp wavelength** using the **LAMBDA PEAK** key.

8.2.6. For **signal keys**, enter the **CONTINUOUS** key for setup.

8.2.7. Press the **RECORD ABSORBANCE** key.

8.2.8. Set the **MODE** key to **ABSORBANCE**.

8.2.9. If the wavelength is >300 nm, use the **AA-MODE** key.

8.2.10. If the wavelength is <300 nm, use the **AA-BG MODE** key.

8.2.11. Press the **SETUP** key and adjust the lamp for maximum absorbance.

8.2.11.1. If the absorbance is >80, press the **GAIN** key and continue the lamp adjustment.

8.2.11.2. When the maximum absorbance is reached, turn the **SETUP** key to **OFF**.

8.2.12. Set the **TIME** key to 0.5 s.

8.2.13. Press the **AZ** (autozero) key. Absorbance should read zero.

8.2.14. Install the 10-cm burner head for air-acetylene analysis and the 5-cm head for nitrous oxide-acetylene.

8.2.15. Adjust the burner head height.

8.2.16. Set oxidant and acetylene flow from Table 8.2 in PE *Analytical Methods for AAS*. (source material 12.1).

8.2.17. Shut the burner shield door and light the flame using the flame **ON/OFF** key on the burner assembly.

8.2.18. Aspirate double-deionized water while the flame is lit.

8.2.19. Aspirate the standard and adjust the instrument for maximum absorbance.

8.3. Running samples.

8.3.1. Enter S1, S2, and S3 as directed for standards in *Analytical Methods for AAS*.

8.3.2. Reset **TIME** key to 3 to 6 s.

8.3.3. Press the signal **HOLD** key.

8.3.4. Select **AVERAGE** key if desired.

8.3.5. Aspirate the known standard and press the **READ** key.

8.3.6. Calculate the characteristic concentration (cc). The result should be within ±20% of the value in *Analytical Methods for AAS*.

8.3.7. Aspirate the calibration-curve standards and read the absorbance.

8.3.8. Switch the **MODE** key to **CONC** (concentration).

8.3.9. Aspirate the standards to set concentration keys as needed.

8.3.10. Read samples and QCs (blind and known).

8.3.11. Recalibrate the instrument with standards every 8 to 12 readings.

8.3.12. When finished, switch the flame **ON/OFF** key to **OFF**. Press the **CHECK FLOW** key on the auto burner control twice to relieve line pressure.

8.3.13. Turn the **POWER** switch on the automatic burner control to **OFF**.

8.3.14. Switch the PE 5000 to **STANDBY** mode.

9. Emergency Shutdown Procedure

9.1. In case of power failure, turn the **POWER** switch on the PE 5000 to **OFF**.

9.2. Turn the gas valves **OFF**.

9.3. Follow procedures for building power failure.

10. Calculations

10.1. Characteristic concentration (cc).

$$cc = \frac{C \times 0.0044}{A_s},$$

where cc = characteristic concentration of flame AA,
C = concentration of standard,
0.0044 = 1% absorbance, and
A_s = absorbance of standard.

11. Proper Waste Disposal Practices

11.1. Solid Waste

11.1.1. Solid waste contaminated with hazardous chemicals above the level of concern is not generated during the routine preparation of QC samples for analysis for inorganic contaminants.

11.1.2. If a solid waste is generated that may be contaminated at a level of concern, the appropriate paperwork is completed on a case-by-case basis.

11.1.2.1. A Waste Profile Request Form (WPRF) describing the solid waste is completed and sent to the Waste Management Group for review.

11.1.2.2. If the Waste Management Group determines that the solid waste is contaminated below the level of concern, the waste is disposed of as ordinary laboratory trash.

11.1.2.3. If the Waste Management Group determines that the solid waste is contaminated above the level of concern, pickup of the contaminated waste is requested as described in Sec. 9.3.

11.2. Liquid Waste

11.2.1. Liquid waste containing hazardous contaminants, such as solutions of trace metals, is accumulated in a coated glass jar in a secondary containment tray and is kept segregated from liquid waste contaminated with organic or radioactive substances or cyanide.

11.2.2. The bottle is labeled with a hazardous waste label and a label indicating its use for trace metal waste.

11.2.3. The bottle is opened only for the period of time necessary to add waste to it.

11.2.4. When the bottle is full, it is capped and kept in the secondary containment tray pending pickup by the Waste Management Group.

11.2.5. A new bottle is labeled for further use.

11.3. Waste Pickup

11.3.1. Pickup by the Waste Management Group of solid waste or a full bottle of liquid waste containing trace metals is requested using the current Chemical Waste Disposal Request Form (CWDR). The current Waste

CONTROLLED

Profile Request Form (WPRF) that describes the waste is referenced on the CWDR.

11.3.2. The Waste Management Group picks up the waste for disposal in accord with Laboratory policy.

12. Source Materials

12.1. Perkin-Elmer Corp., *Analytical Methods for Atomic Absorption Spectroscopy* (Norwalk, CT, 1976).

12.2. Perkin-Elmer Corp., *Instructions: Zeeman/5000 System* (Norwalk, CT, 1982).

12.3. U.S. Environmental Protection Agency, "Methods for Chemical Analysis of Water and Wastes," EPA-600/4-79-020 (rev. March 1983).

12.4. U.S. Environmental Protection Agency, "Test Methods for Evaluation of Solid Waste: Laboratory Manual of Physical and Chemical Methods," SW-846 (Nov. 1986).

12.5. "Chemical, Hazardous, and Mixed Waste," Administrative Requirement 10-3, Chapter 1 in Los Alamos National Laboratory *Environment, Safety, and Health Manual* (most recent edition).

CONTROLLED

EM-9 ANALYTICAL PROCEDURE REVIEW AND APPROVAL

Method: Nickel in Water and Soil Extracts — Flame AA

Method No.: EI170 **Revision No.:** 0

Section Leader Charles Cipel **Date:** 11/25/92

Group Leader [illegible] **Date:** 12/4/92

QA Concurrence Margaret A Gautier **Date:** 12-2-92

CONTROLLE

POTASSIUM IN WATER AND SOIL EXTRACTS — FLAME AA

Analyte: Potassium	**Method No.:** EI175
Matrix: Water, waste water, and soil extracts	**Detection Limit:** 2 mg/L
Procedure: Flame atomic absorption	**Accuracy and Precision:** not determined
Effective Date: 09/23/91	**Authors:** Michael G. Bell Barbara J. Hemberger

SAFETY NOTE: Before beginning this procedure, read all of the Material Safety Data Sheets for the chemicals listed in Sec. 6. Read Sec. 4.3 of the EM-9 Safety Manual for information on personal protective clothing and equipment. Read Sec. 11 of this procedure and Source Material 12.5 for proper waste disposal practices.

1. Principle of Method

1.1. This procedure is based on Environmental Protection Agency (EPA) method 258.1 and SW-846 method 7610.

1.2. Potassium in solution may be readily determined by atomic absorption spectroscopy (AAS). The method is simple and rapid and is applicable to K in drinking, surface, and saline waters and in domestic and industrial wastes.

1.3. Drinking water free of particulate matter may be analyzed directly. Ground water, other aqueous samples, TCLP extracts, industrial wastes, soils, sludges, sediments, and other solid wastes require digestion before analysis.

2. Accuracy and Precision

2.1. The accuracy and precision of the method for in-house quality control samples has not yet been determined.

3. Collection and Storage of Samples

3.1. Preserve samples with nitric acid (HNO_3) at a pH <2.0. Complete analysis within six months.

4. Interferences

4.1. Contamination is of prime concern during sample preparation. The work area, including the bench top, should be periodically cleaned to eliminate environmental contamination.

4.2. Chemical interferences are matrix dependent and can be corrected by the addition of matrix modifiers. Refer to Perkin-Elmer (PE) Analytical Methods for AAS for appropriate modifier.

4.3. Silica from the glassware will grow into the sample solution during and following sample processing. Use sterile disposable 50-mL polypropylene centrifuge tubes in the sample digestion steps to control this problem.

5. Apparatus

5.1. Centrifuge tubes: 50-mL, sterile polypropylene.

5.2. Rainin pipettes with disposable tips.

5.3. Wash bottles: 125-mL, polypropylene, screw tops.

5.4. Hot plate: with aluminum heating block drilled to hold centrifuge tubes.

5.5. Perkin-Elmer 5000 atomic absorption spectrometer or equivalent.

5.6. Gases for the above instrument: air, acetylene, nitrous oxide, argon.

6. Reagents

6.1. Nitric acid (low-temperature redistilled acid, LTRD).

6.2. Hydrochloric acid (low-temperature redistilled acid, LTRD).

6.3. Double-deionized water.

6.4. ASTM Type I water (>10 MΩ/cm resistivity, <0.1 μmho/cm conductivity).

7. Sample Preparation Procedure

7.1. To determine total recoverable elements in water or waste water, take a 50-mL aliquot from an acid-preserved sample containing not more than 0.25% (wt/vol) total solids. Place the aliquot in a sterile disposable 50-mL polypropylene centrifuge tube.

7.1.1. Add 500 μL of LTRD HNO_3 and 250 μL of Ultrex or LTRD HCl to each sample.

7.1.2. Heat on a hot plate without boiling (approximately 85°C) until the final volume is reduced to 5-10 mL.

7.1.3. Loosely cover the tube with the cap and reflux for 30 min.

7.1.4. Allow the sample to cool and dilute to 50 mL with ASTM Type I water.

7.1.5. Run one digested blank and one digested spike with each digested batch.

7.1.6. Run a duplicate and a spike for 10-20% of the samples.

7.1.7. For TCLP samples, run a spike for every sample and run 20% duplicates.

8. Instrument Procedure

8.1. Power instrument and check gases.

8.1.1. Turn the **POWER** switch on the Perkin-Elmer (PE) 5000 atomic absorption (AA) spectrometer to **ON**.

8.1.2. Turn the **POWER** switch on the PE 5000 automatic burner control to **ON**.

8.1.3. Turn the **AIR SUPPLY** valve **ON**.

8.1.4. Check the pressure in the acetylene tank; if it is <100 psi, change the tank. Turn the **ACETYLENE SUPPLY** valve **ON**.

8.1.5. Turn the **NITROUS OXIDE SUPPLY** valve **ON**, if necessary.

8.1.6. Turn the AA switch from **STANDBY** mode to **RUN**.

8.1.7. Make sure the exhaust hood is functioning.

8.1.8. Make sure the fluids in the drain vessel and drain loop are at their proper levels.

8.2. Instrument setup.

8.2.1. Insert the potassium lamp in the turret and plug it in.

8.2.2. Enter the **turret lamp number** on the keyboard.

8.2.3. Enter the recommended **lamp milliamps** (mA).

8.2.4. Enter the **lamp slit width** using the **HIGH SLIT** key for flame AA.

8.2.5. Enter the **lamp wavelength** using the **LAMBDA PEAK** key.

8.2.6. For **signal keys**, enter the **CONTINUOUS** key for setup.

8.2.7. Press the **RECORD ABSORBANCE** key.

8.2.8. Set the **MODE** key to **ABSORBANCE.**

8.2.9. If the wavelength is >300 nm, use the **AA-MODE** key.

8.2.10. If the wavelength is <300 nm, use the **AA-BG MODE** key.

8.2.11. Press the **SETUP** key and adjust the lamp for maximum absorbance.

8.2.11.1. If the absorbance is >80, press the **GAIN** key and continue the lamp adjustment.

8.2.11.2. When the maximum absorbance is reached, turn the **SETUP** key to **OFF.**

8.2.12. Set the **TIME** key to 0.5 s.

8.2.13. Press the **AZ** (autozero) key. Absorbance should read zero.

8.2.14. Install the 10-cm burner head for air-acetylene analysis and the 5-cm head for nitrous oxide-acetylene.

8.2.15. Adjust the burner head height.

8.2.16. Set oxidant and acetylene flow from Table 8.2 in PE *Analytical Methods for AAS.* (source material 12.1).

8.2.17. Shut the burner shield door and light the flame using the flame **ON/OFF** key on the burner assembly.

8.2.18. Aspirate double-deionized water while the flame is lit.

8.2.19. Aspirate the standard and adjust the instrument for maximum absorbance.

8.3. Running samples.

8.3.1. Enter S1, S2, and S3 as directed for standards in *Analytical Methods for AAS.*

8.3.2. Reset **TIME** key to 3 to 6 s.

8.3.3. Press the signal **HOLD** key.

8.3.4. Select **AVERAGE** key if desired.

CONTROLLED

8.3.5. Aspirate the known standard and press the **READ** key.

8.3.6. Calculate the characteristic concentration (cc). The result should be within ±20% of the value in *Analytical Methods for AAS*.

8.3.7. Aspirate the calibration-curve standards and read the absorbance.

8.3.8. Switch the **MODE** key to **CONC** (concentration).

8.3.9. Aspirate the standards to set concentration keys as needed.

8.3.10. Read samples and QCs (blind and known).

8.3.11. Recalibrate the instrument with standards every 8 to 12 readings.

8.3.12. When finished, switch the flame **ON/OFF** key to **OFF**. Press the **CHECK FLOW** key on the auto burner control twice to relieve line pressure.

8.3.13. Turn the **POWER** switch on the automatic burner control to **OFF**.

8.3.14. Switch the PE 5000 to **STANDBY** mode.

9. Emergency Shutdown Procedure

9.1. In case of power failure, turn the **POWER** switch on the PE 5000 to **OFF**.

9.2. Turn the gas valves **OFF**.

9.3. Follow procedures for building power failure.

10. Calculations

10.1. Characteristic concentration (cc).

$$cc = \frac{C \times 0.0044}{A_s},$$

where cc = characteristic concentration for flame AA,
C = concentration of standard,
0.0044 = 1% absorbance, and
A_s = absorbance of standard.

11. Proper Waste Disposal Practices

11.1. Solid Waste

11.1.1. Solid waste contaminated with hazardous chemicals above the level of concern is not generated during the routine preparation of QC samples for analysis for inorganic contaminants.

11.1.2. If a solid waste is generated that may be contaminated at a level of concern, the appropriate paperwork is completed on a case-by-case basis.

11.1.2.1. A Waste Profile Request Form (WPRF) describing the solid waste is completed and sent to the Waste Management Group for review.

11.1.2.2. If the Waste Management Group determines that the solid waste is contaminated below the level of concern, the waste is disposed of as ordinary laboratory trash.

11.1.2.3. If the Waste Management Group determines that the solid waste is contaminated above the level of concern, pickup of the contaminated waste is requested as described in Sec. 9.3.

11.2. Liquid Waste

11.2.1. Liquid waste containing hazardous contaminants, such as solutions of trace metals, is accumulated in a coated glass jar in a secondary containment tray and is kept segregated from liquid waste contaminated with organic or radioactive substances or cyanide.

11.2.2. The bottle is labeled with a hazardous waste label and a label indicating its use for trace-metal waste.

11.2.3. The bottle is opened only for the period of time necessary to add waste to it.

11.2.4. When the bottle is full, it is capped and kept in the secondary containment tray pending pickup by the Waste Management Group.

11.2.5. A new bottle is labeled for further use.

11.3. Waste Pickup

11.3.1. Pickup by the Waste Management Group of solid waste or a full bottle of liquid waste containing trace metals is requested using the current Chemical Waste Disposal Request Form (CWDR). The current Waste

CONTROLLE

Profile Request Form (WPRF) that describes the waste is referenced on the CWDR.

11.3.2. The Waste Management Group picks up the waste for disposal in accord with Laboratory policy.

12. Source Materials

12.1. Perkin-Elmer Corp., *Analytical Methods for Atomic Absorption Spectroscopy* (Norwalk, CT, 1976).

12.2. Perkin-Elmer Corp., *Instructions: Zeeman/5000 System* (Norwalk, CT, 1982).

12.3. U.S. Environmental Protection Agency, "Methods for Chemical Analysis of Water and Wastes," EPA-600/4-79-020 (rev. March 1983).

12.4. U.S. Environmental Protection Agency, "Test Methods for Evaluation of Solid Waste: Laboratory Manual of Physical and Chemical Methods," SW-846 (Nov. 1986).

12.5. "Chemical, Hazardous, and Mixed Waste," Administrative Requirement 10-3, Chapter 1 in Los Alamos National Laboratory *Environment, Safety, and Health Manual* (most recent edition).

CONTROLLED

EM-9 ANALYTICAL PROCEDURE REVIEW AND APPROVAL

Method: Potassium in Water and Soil Extracts — Flame AA

Method No.: EI175 **Revision No.:** 0

Section Leader Charles Capel **Date:** 11/25/92

Group Leader [illegible] **Date:** 12/4/92

QA Concurrence Margaret A. Gautier **Date:** 12-2-92

CONTROLLED

SELENIUM IN WATER AND SOIL EXTRACTS – GRAPHITE FURNACE AA

Analtye: Selenium	**Method No.:** EI185
Matrix: Water, waste water, and soil extracts	**Detection Limit:** 2.0 μg/L
Procedure: Graphite furnace atomic absorption	**Accuracy and Precision:** 96% ± 1.04% RSD
Effective Date: 09/25/91	**Authors:** Michael G. Bell Barbara J. Hemberger

SAFETY NOTE: Before beginning this procedure, read all of the Material Safety Data Sheets for the chemicals listed in Sec. 6. Read Sec. 4.3 of the EM-9 Safety Manual for information on personal protective clothing and equipment. Read Sec. 11 of this procedure and Source Material 12.6 for proper waste disposal practices.

1. Principle of Method

1.1. This procedure is based on Environmental Protection Agency (EPA) method 270.2 and SW846 method 7740.

1.1. Selenium in solution may be readily determined by graphite furnace atomic absorption spectroscopy. The method is applicable to Se in drinking, surface, and saline waters and in domestic and industrial wastes.

1.3. Drinking water free of particulate matter may be analyzed directly. Ground water, other aqueous samples, TCLP extracts, industrial wastes, soils, sludges, sediments, and other solid wastes require digestion before analysis.

2. Accuracy and Precision

2.1. The determination of selenium in 18 in-house quality control samples (9.7 μg/L) over an 8-month period had a mean of 10.1 μg/L and a relative standard deviation (RSD) of 1.04%.

3. Collection and Storage of Samples.

3.1. Preserve samples with nitric acid (HNO_3) at a pH <2.0. Complete analysis within 6 months.

4. Interferences

4.1. Contamination is of prime concern during sample preparation. Periodically clean the work area, including the bench top, to eliminate environmental contamination. Use acid-washed sample cups in the autosampler.

4.2. Chemical interferences can be controlled by the addition of a matrix modifier to all samples and standards. Refer to Perkin-Elmer chart 0993-8199 Rev. D (11/89), or to the PE *Methods of Analysis for AAS*, for the appropriate matrix modifier.

4.3. Silica from the glassware will grow into the sample solution during and following sample processing. To control this problem, use disposable sterile 50-mL polypropylene centrifuge tubes in the sample digestion steps.

5. Apparatus

5.1. Centrifuge tubes: 50-mL, sterile polypropylene.

5.2. Rainin pipettes with disposable tips.

5.3. Wash bottles: 125-mL, polypropylene, screw tops.

5.4. Hot plate: with aluminum heating block drilled to hold centrifuge tubes.

5.5. Perkin-Elmer 5000 atomic absorption instrument: equipped with a Zeeman graphite furnace or equivalent.

5.6. Required gas for the above instrument is ultrapure argon.

6. Reagents

6.1. Nitric acid (low-temperature redistilled acid, LTRD).

6.2. Hydrochloric acid (low-temperature redistilled acid, LTRD).

6.3. Double-deionized water.

6.4. ASTM Type I water (>10 MΩ/cm resistivity, >0.1 μmho/cm conductivity).

6.5. Appropriate matrix modifier for all samples, standards, and QCs.

6.6. Secondary standards for making the appropriate standard curves.

7. Sample Preparation Procedure

7.1. To determine total recoverable elements in water, waste water, and soil extracts, take a 50-mL aliquot from an acid preserved sample containing not more than 0.25% (wt/vol) total solids. Place the aliquot in a sterile 50-mL disposable polypropylene centrifuge tube.

7.1.1. Add 500 μL of LTRD HNO_3 and 250 μL of Ultrex or LTRD HCl to each sample.

7.1.2. Heat on a hot plate without boiling (approximately 85°C) until the volume is reduced to 5-10 mL.

7.1.3. Loosely cover the tube with the cap and reflux for 30 min.

7.1.4. Allow the sample to cool, and dilute to 50 mL with ASTM Type I water.

7.1.5. Run one digested blank and one digested spike for each digested batch.

7.1.6. Run a duplicate and a spike for 10-20% of the samples.

7.1.7. For TCLP samples, run a spike for every sample and 20% duplicates.

7.1.8. The analysis should be performed before the EPA regulatory holding times expire.

7.1.9. Add sample and standards to acid-cleaned sample cups.

8. Instrument Procedure

8.1. Instrument power and gases check.

8.1.1. Turn the **POWER** switch to the PE5000 atomic absorption (AA) to **ON**.

8.1.2. Turn **ON** the argon supply valve after checking the pressure at the tank. Pressure must be over 100 psi or the tank must be changed.

8.1.3. Turn the AA switch from **STANDBY** mode to **RUN**.

8.1.4. Make sure the exhaust hood over the graphite furnace is functioning.

8.2. Instrument setup.

8.2.1. Insert the selenium lamp into the turret oriented toward the ETVAA and plug it in.

8.2.2. Enter **turret lamp number** into keyboard.

8.2.3. Enter recommended **lamp milliamps** (mA) or **watts** depending on lamp type (EDL/HCL).

8.2.3.1. Warm up the EDL and/or HCL lamp for a minimum of 20 min.

8.2.4. Enter **lamp slit width** using **LOW SLIT** key for ETVAA.

8.2.5. Enter **lamp wavelength** using **LAMBDA PEAK** key.

8.2.6. Turn AA switch inside lamp housing to **ICP/ZAA** position.

8.3. Keyboard setup.

8.3.1. Set **SIGNAL** key to **PK AREA** (peak area).

8.3.2. Turn **REC ABS** (record absorbance) signal key **ON**.

8.3.3. Enter **AVG** (average) number (if used).

8.3.4. Enter **CONC MODE** (concentration).

8.4. Furnace setup.

8.4.1. Press **ZAA** key.

8.4.2. Turn **ACCESSORY** knob to **ON** position.

8.4.3. Turn chiller **ON** and check that the water level is above the coils.

8.4.4. Check that the water bottle for distilled water rinse on the autosampler is full.

8.4.5. Turn **ON** the HGA-500 programmer.

8.4.5.1. Enter the temperature program for the element from the ETVAA procedure manual and store the procedure number.

8.5. Computer setup.

8.5.1. Turn PE AA Data System 10 computer **master switch** to **ON**.

8.5.2. Set up ID/WT file.

8.5.3. Turn **print button** on PE5000 keyboard **ON** and store the program.

8.6. Set up autosampler.

8.6.1. Recalibrate the standard curve every 8 to 12 samples.

8.6.2. Enter the number of standards (# stds).

8.6.3. Enter the last sample number (last samp).

8.6.4. Enter the sample volume (samp vol).

8.6.5. Enter the alternate volume (alt vol) for the matrix modifier if used.

8.6.6. Enter the instrument program number (inst prog).

8.6.7. Enter the HGA program number (HGA prog).

8.7. Graphite furnace setup.

8.7.1. Open the furnace and clean or replace the graphite tube. Use the tube with or without the platform depending on the element.

8.7.2. If inserting a new tube, condition it with the manual temperature key.

8.7.3. Using the alignment tool, reinsert the graphite tube and close the furnace.

8.7.4. Using the manual temperature key, set the pyrometer to the atomization temperature of the element and balance the lights (red/green) using the calibration (CAL) knob.

8.7.5. Place the AS40 in **STANDBY** mode and align the autosampler arm. Check the depth of the sample delivery inside the tube and inside the samples. Exit **STANDBY** mode.

8.7.6. Remove and check the furnace lenses. Reinsert the lenses and check the absorbance. If the absorbance reads above 0.100, clean the lenses.

8.7.7. Put samples and standards into the autosampler tray and cover with the dust cover to prevent contamination.

8.7.8. Put the matrix modifier in the holder position, if required.

8.7.9. Check the blank and standards manually.

8.7.10. Calculate the characteristic concentration (cc). If it is within ±20% of chart value (0993-8199 Rev. D 11/89) start the run.

8.7.11. Enter **collect data** mode on PE Data System 10 computer and follow instructions.

8.7.12. After run is complete, press to **DISK** key on PE Data System 10 **twice**.

8.7.13. Select **report** mode on the computer, follow instructions, and print the out final report.

8.7.14. When finished, shut off the chiller, argon gas supply, lamps, EDL power supply, and computer.

8.7.15 Place the autosampler, HGA Programmer,and PE5000 in standby mode.

9. Emergency Shutdown Procedure

9.1. In case of power failure, turn **POWER** switch on PE5000 AA to **OFF**.

9.2. Turn **OFF** the gas valves.

9.3. Follow building power failure procedures.

10. Calculations

10.1. Characteristic concentration (cc).

$$cc = \frac{C \times V \times 0.0044}{A_s},$$

where cc = characteristic concentration for ETVAA,
C = concentration of standard (μg/L),
V = sample aliquot (μL),
A_s = absorbance of standard, and
0.0044 = 1% absorbance.

11. Proper Waste Disposal Practices

11.1. Solid waste.

11.1.1. Solid waste contaminated with hazardous chemicals above the level of concern is not normally generated. This waste can be placed in the usual trash receptacles in the labs at TA-50.

11.1.2. If a solid waste is generated that may be contaminated at a level of concern, the appropriate paperwork is completed on a case-by-case basis.

11.1.2.1. Complete a Waste Profile Request Form (WPRF) describing the solid waste and send it to the Waste Management group for review.

11.1.2.2. If the Waste Management group determines that the solid waste is contaminated below the level of concern, dispose of the waste as ordinary laboratory trash.

11.1.2.3. If the Waste Management group determines that the solid waste is contaminated above the level of concern, request pickup of the contaminated waste as described in Sec. 11.3.

11.2. Liquid waste.

11.2.1. Accumulate liquid waste containing hazardous contaminants, such as solutions of trace metals above the limits posted for dumping at each lab sink at TA-50, in a coated glass jar in a secondary containment tray and keep it segregated from liquid waste contaminated with listed organics or cyanide greater than 0.5 ppm.

11.2.2. Label the bottle with a hazardous waste label, a corrosive label, a toxic label, and a label indicating its use for trace metal waste. Date the label.

11.2.3. Open the bottle only for the time necessary to add waste.

11.2.4. Keep full bottles in the secondary containment tray pending pickup by the Waste Management group.

11.2.5. Label a new bottle for further use.

11.2.6. Dump liquid inorganic wastes which do not contain any EPA-listed components, or which have toxic metals below the limits posted at lab sinks at TA-50, directly into the lab sink.

11.3. Waste pickup.

11.3.1. Request pickup by the Waste Management group of solid waste or a full bottle of liquid waste containing trace metals using the current Chemical Waste Disposal Request Form (CWDR). The current Waste Profile Request Form (WPRF) that describes the waste is referenced on the CWDR.

11.3.2. The Waste Management group picks up the waste for disposal in accord with Laboratory policy.

12. Source Material

12.1. *Analytical Methods for Atomic Absorption Spectrophotometry*, (Perkin-Elmer, Norwalk, Conn., 1976).

12.2. *Instructions: Zeeman/5000 System*, (Perkin-Elmer, Norwalk, Conn., 1982).

12.3. Methods for Chemical Analysis of Water and Wastes, EPA-600/4-79-020 U.S. Environmental Protection Agency, (rev. March 1983).

12.4. Perkin-Elmer chart 0993-8199 Rev. D (11/89).

12.5. "Test Methods for Evaluation of Solid Waste: Laboratory Manual of Physical and Chemical Methods," EPA report no. SW-846 (November 1986).

12.6. "Hazardous and Mixed Waste," Administrative Requirement 10-3, in *Environment, Safety, and Health Manual*, Los Alamos National Laboratory Manual, Chapter 1 (most recent edition).

Revisions or additions to the procedure are marked (▒). Where a section heading is marked the entire section has been revised.

CONTROLLED

EM-9 ANALYTICAL PROCEDURE REVIEW AND APPROVAL

Method: Selenium in Water and Soil Extracts — Graphite Furnace AA

Method No.: EI185 **Revision No.:** 1

Section Leader _____ **Date:** _____

Group Leader _____ **Date:** 5/12/93

QA Concurrence Margaret A. Hautin **Date:** 5-12-93

CONTROLLED

SILVER IN WATER AND SOIL EXTRACTS – FLAME AA

Analyte: Silver	**Method No.:** EI190
Matrix: Water, waste water, and soil extracts	**Detection Limit:** 10 μg/L
Procedure: Flame atomic absorption	**Accuracy and Precision:** 100% ± 1.2% RSD
Effective Date: 09/23/91	**Authors:** Michael G. Bell Barbara J. Hemberger

SAFETY NOTE: Before beginning this procedure, read all of the Material Safety Data Sheets for the chemicals listed in Sec. 6. Read Sec. 4.3 of the EM-9 Safety Manual for information on personal protective clothing and equipment. Read Sec. 11 of this procedure and Source Material 12.5 for proper waste disposal practices.

1. Principle of Method

1.1. This procedure is based on Environmental Protection Agency (EPA) method 272.1 and SW-846 method 7760.

1.2. Silver in solution may be readily determined by atomic absorption spectroscopy (AAS). The method is simple and rapid and is applicable to Ag in drinking, surface, and saline waters and in domestic and industrial wastes.

1.3. Drinking water free of particulate matter may be analyzed directly. Ground water, other aqueous samples, TCLP extracts, industrial wastes, soils, sludges, sediments, and other solid wastes require digestion before analysis.

2. Accuracy and Precision

2.1. The determination of silver in 88 in-house quality control samples (500 μg/L) over a 9-month period had a mean of 0.494 μg/L and a relative standard deviation (RSD) of 1.2%.

3. Collection and Storage of Samples

3.1. Preserve samples with nitric acid (HNO_3) at a pH <2.0. Complete analysis within six months.

4. Interferences

4.1. Contamination is of prime concern during sample preparation. The work area, including the bench top, should be periodically cleaned to eliminate environmental contamination.

4.2. Chemical interferences are matrix dependent.

4.3. Silica from the glassware will grow into the sample solution during and following sample processing. Use sterile disposable 50-mL polypropylene centrifuge tubes in the sample digestion steps to control this problem.

5. Apparatus

5.1. Centrifuge tubes: 50-mL, sterile polypropylene.

5.2. Rainin pipettes with disposable tips.

5.3. Wash bottles: 125-mL, polypropylene, screw tops.

5.4. Hot plate: with aluminum heating block drilled to hold centrifuge tubes.

5.5. Perkin-Elmer 5000 atomic absorption spectrometer or equivalent.

5.6. Gases for the above instrument: air, acetylene, nitrous oxide, argon.

6. Reagents

6.1. Nitric acid (low-temperature redistilled acid, LTRD).

6.2. Hydrochloric acid (low-temperature redistilled acid, LTRD).

6.3. Double-deionized water.

6.4. ASTM Type I water (>10 MΩ/cm resistivity, <0.1 μmho/cm conductivity).

7. Sample Preparation Procedure

7.1. To determine total recoverable elements in water or waste water, take a 50-mL aliquot from an acid-preserved sample containing not more than 0.25% (wt/vol) total solids. Place the aliquot in a sterile disposable 50-mL polypropylene centrifuge tube.

7.1.1. Add 500 μL of LTRD HNO_3 and 250 μL of Ultrex or LTRD HCl to each sample.

7.1.2. Heat on a hot plate without boiling (approximately 85°C) until the final volume is reduced to 5-10 mL.

7.1.3. Loosely cover the tube with the cap and reflux for 30 min.

7.1.4. Allow the sample to cool and dilute to 50 mL with ASTM Type I water.

CONTROLLED

7.1.5. Run one digested blank and one digested spike with each digested batch.

7.1.6. Run a duplicate and a spike for 10-20% of the samples.

7.1.7. For TCLP samples, run a spike for every sample and run 20% duplicates.

7.1.8. The analysis should be performed before the regulatory (EPA SW846) holding times expire.

8. Instrument Procedure

8.1. Power instrument and check gases.

8.1.1. Turn the **POWER** switch on the Perkin-Elmer (PE) 5000 atomic absorption (AA) spectrometer to **ON**.

8.1.2. Turn the **POWER** switch on the PE 5000 automatic burner control to **ON**.

8.1.3. Turn the **AIR SUPPLY** valve **ON**.

8.1.4. Check the pressure in the acetylene tank; if it is <100 psi, change the tank. Turn the **ACETYLENE SUPPLY** valve **ON**.

8.1.5. Turn the **NITROUS OXIDE SUPPLY** valve **ON**, if necessary.

8.1.6. Turn the AA switch from **STANDBY** mode to **RUN**.

8.1.7. Make sure the exhaust hood is functioning.

8.1.8. Make sure the fluids in the drain vessel and drain loop are at their proper levels.

8.2. Instrument setup.

8.2.1. Insert the silver lamp in the turret and plug it in.

8.2.2. Enter the **turret lamp number** on the keyboard.

8.2.3. Enter the recommended **lamp milliamps** (mA).

8.2.4. Enter the **lamp slit width** using the **HIGH SLIT** key for flame AA.

8.2.5. Enter the **lamp wavelength** using the **LAMBDA PEAK** key.

8.2.6. For **signal keys**, enter the **CONTINUOUS** key for setup.

8.2.7. Press the **RECORD ABSORBANCE** key.

8.2.8. Set the **MODE** key to **ABSORBANCE**.

8.2.9. If the wavelength is >300 nm, use the **AA-MODE** key.

8.2.10. If the wavelength is <300 nm, use the **AA-BG MODE** key.

8.2.11. Press the **SETUP** key and adjust the lamp for maximum absorbance.

8.2.11.1. If the absorbance is >80, press the **GAIN** key and continue the lamp adjustment.

8.2.11.2. When the maximum absorbance is reached, turn the **SETUP** key to **OFF**.

8.2.12. Set the **TIME** key to 0.5 s.

8.2.13. Press the **AZ** (autozero) key. Absorbance should read zero.

8.2.14. Install the 10-cm burner head for air-acetylene analysis and the 5-cm head for nitrous oxide-acetylene.

8.2.15. Adjust the burner head height.

8.2.16. Set oxidant and acetylene flow from Table 8.2 in PE *Analytical Methods for AAS*. (source material 12.1).

8.2.17. Shut the burner shield door and light the flame using the flame **ON/OFF** key on the burner assembly.

8.2.18. Aspirate double-deionized water while the flame is lit.

8.2.19. Aspirate the standard and adjust the instrument for maximum absorbance.

8.3. Running samples.

8.3.1. Enter S1, S2, and S3 as directed for standards in *Analytical Methods for AAS*.

8.3.2. Reset **TIME** key to 3 to 6 s.

8.3.3. Press the signal **HOLD** key.

8.3.4. Select **AVERAGE** key if desired.

8.3.5. Aspirate the known standard and press the **READ** key.

8.3.6. Calculate the characteristic concentration (cc). The result should be within ±20% of the value in *Analytical Methods for AAS*.

8.3.7. Aspirate the calibration-curve standards and read the absorbance.

8.3.8. Switch the **MODE** key to **CONC** (concentration).

8.3.9. Aspirate the standards to set concentration keys as needed.

8.3.10. Read samples and QCs (blind and known).

8.3.11. Recalibrate the instrument with standards every 8 to 12 readings.

8.3.12. When finished, switch the flame **ON/OFF** key to **OFF**. Press the **CHECK FLOW** key on the auto burner control twice to relieve line pressure.

8.3.13. Turn the **POWER** switch on the automatic burner control to **OFF**.

8.3.14. Switch the PE 5000 to **STANDBY** mode.

9. Emergency Shutdown Procedure

9.1. In case of power failure, turn the **POWER** switch on the PE 5000 to **OFF**.

9.2. Turn the gas valves **OFF**.

9.3. Follow procedures for building power failure.

10. Calculations

10.1. Characteristic concentration (cc).

$$cc = \frac{C \times 0.0044}{A_s},$$

where cc = characteristic concentration of flame AA,
C = concentration of standard,
0.0044 = 1% absorbance, and
A_s = absorbance of standard.

11. Proper Waste and Disposal Practices

11.1. Solid Waste

11.1.1. Solid waste contaminated with hazardous chemicals above the level of concern is not generated during the routine preparation of QC samples for analysis for inorganic contaminants.

11.1.2. If a solid waste is generated that may be contaminated at a level of concern, the appropriate paperwork is completed on a case-by-case basis.

11.1.2.1. A Waste Profile Request Form (WPRF) describing the solid waste is completed and sent to the Waste Management Group for review.

11.1.2.2. If the Waste Management Group determines that the solid waste is contaminated below the level of concern, the waste is disposed of as ordinary laboratory trash.

11.1.2.3. If the Waste Management Group determines that the solid waste is contaminated above the level of concern, pickup of the contaminated waste is requested as described in Sec. 9.3.

11.2. Liquid Waste

11.2.1. Liquid waste containing hazardous contaminants, such as solutions of trace metals, is accumulated in a coated glass jar in a secondary containment tray and is kept segregated from liquid waste contaminated with organic or radioactive substances or cyanide.

11.2.2. The bottle is labeled with a hazardous waste label and a label indicating its use for trace-metal waste.

11.2.3. The bottle is opened only for the period of time necessary to add waste to it.

11.2.4. When the bottle is full, it is capped and kept in the secondary containment tray pending pickup by the Waste Management Group.

11.2.5. A new bottle is labeled for further use.

11.3. Waste Pickup

11.3.1. Pickup by the Waste Management Group of solid waste or a full bottle of liquid waste containing trace metals is requested using the current Chemical Waste Disposal Request Form (CWDR). The current Waste

CONTROLLE

Profile Request Form (WPRF) that describes the waste is referenced on the CWDR.

11.3.2. The Waste Management Group picks up the waste for disposal in accord with Laboratory policy.

12. Source Materials

12.1. Perkin-Elmer Corp., *Analytical Methods for Atomic Absorption Spectroscopy* (Norwalk, CT, 1976).

12.2. Perkin-Elmer Corp., *Instructions: Zeeman/5000 System* (Norwalk, CT, 1982).

12.3. U.S. Environmental Protection Agency, "Methods for Chemical Analysis of Water and Wastes," EPA-600/4-79-020 (rev. March 1983).

12.4. U.S. Environmental Protection Agency, "Test Methods for Evaluation of Solid Waste: Laboratory Manual of Physical and Chemical Methods," SW-846 (Nov. 1986).

12.5. "Chemical, Hazardous, and Mixed Waste," Administrative Requirement 10-3, Chapter 1 in Los Alamos National Laboratory *Environment, Safety, and Health Manual* (most recent edition).

CONTROLLED

EM-9 ANALYTICAL PROCEDURE REVIEW AND APPROVAL

Method: Silver in Water and Soil Extracts — Flame AA

Method No.: EI190 **Revision No.:** 0

Section Leader Charles Capel **Date:** 11/25/92

Group Leader [illegible] **Date:** 12/4/92

QA Concurrence Margaret A. Gautier **Date:** 12-2-92

CONTROLLED

SODIUM IN WATER AND SOIL EXTRACTS — FLAME AA

Analyte: Sodium	**Method No.:** EI195
Matrix: Water, waste water, and soil extracts	**Detection Limit:** 2 mg/L
Procedure: Flame atomic absorption	**Accuracy and Precision:** not determined
Effective Date: 09/23/91	**Authors:** Michael G. Bell Barbara J. Hemberger

SAFETY NOTE: Before beginning this procedure, read all of the Material Safety Data Sheets for the chemicals listed in Sec. 6. Read Sec. 4.3 of the EM-9 Safety Manual for information on personal protective clothing and equipment. Read Sec. 11 of this procedure and Source Material 12.5 for proper waste disposal practices.

1. Principle of Method

1.1. This procedure is based on Environmental Protection Agency (EPA) method 273.1 and SW-846 method 7770.

1.2. Sodium in solution may be readily determined by atomic absorption spectroscopy (AAS). The method is simple and rapid and is applicable to Na in drinking, surface, and saline waters and in domestic and industrial wastes.

1.3. Drinking water free of particulate matter may be analyzed directly. Ground water, other aqueous samples, TCLP extracts, industrial wastes, soils, sludges, sediments, and other solid wastes require digestion before analysis.

2. Accuracy and Precision

2.1. The accuracy and precision of the method for in-house quality control samples has not yet been determined.

3. Collection and Storage of Samples

3.1. Preserve samples with nitric acid (HNO_3) at a pH <2.0. Complete analysis within six months.

4. Interferences

4.1. Contamination is of prime concern during sample preparation. The work area, including the bench top, should be periodically cleaned to eliminate environmental contamination.

4.2. Chemical interferences are matrix dependent and can be corrected by the addition of matrix modifiers. Refer to the Perkin-Elmer (PE) Analytical Methods for AAS for appropriate modifier.

4.3. Silica from the glassware will grow into the sample solution during and following sample processing. Use sterile disposable 50-mL polypropylene centrifuge tubes in the sample digestion steps to control this problem.

5. Apparatus

5.1. Centrifuge tubes: 50-mL, sterile polypropylene.

5.2. Rainin pipettes with disposable tips.

5.3. Wash bottles: 125-mL, polypropylene, screw tops.

5.4. Hot plate: with aluminum heating block drilled to hold centrifuge tubes.

5.5. Perkin-Elmer 5000 atomic absorption spectrometer or equivalent.

5.6. Gases for the above instrument: air, acetylene, nitrous oxide, argon.

6. Reagents

6.1. Nitric acid (low-temperature redistilled acid, LTRD).

6.2. Hydrochloric acid (low-temperature redistilled acid, LTRD).

6.3. Double-deionized water.

6.4. ASTM Type I water (>10 MΩ/cm resistivity, <0.1 μmho/cm conductivity).

7. Sample Preparation Procedure

7.1. To determine total recoverable elements in water or waste water, take a 50-mL aliquot from an acid-preserved sample containing not more than 0.25% (wt/vol) total solids. Place the aliquot in a sterile disposable 50-mL polypropylene centrifuge tube.

7.1.1. Add 500 μL of LTRD HNO_3 and 250 μL of Ultrex or LTRD HCl to each sample.

7.1.2. Heat on a hot plate without boiling (approximately 85°C) until the final volume is reduced to 5-10 mL.

7.1.3. Loosely cover the tube with the cap and reflux for 30 min.

7.1.4. Allow the sample to cool and dilute to 50 mL with ASTM Type I water.

7.1.5. Run one digested blank and one digested spike with each digested batch.

7.1.6. Run a duplicate and a spike for 10-20% of the samples.

7.1.7. For TCLP samples, run a spike for every sample and run 20% duplicates.

8. Instrument Procedure

8.1. Power instrument and check gases.

8.1.1. Turn the **POWER** switch on the Perkin-Elmer (PE) 5000 atomic absorption (AA) spectrometer to **ON**.

8.1.2. Turn the **POWER** switch on the PE 5000 automatic burner control to **ON**.

8.1.3. Turn the **AIR SUPPLY** valve **ON**.

8.1.4. Check the pressure in the acetylene tank; if it is <100 psi, change the tank. Turn the **ACETYLENE SUPPLY** valve **ON**.

8.1.5. Turn the **NITROUS OXIDE SUPPLY** valve **ON**, if necessary.

8.1.6. Turn the AA switch from **STANDBY** mode to **RUN**.

8.1.7. Make sure the exhaust hood is functioning.

8.1.8. Make sure the fluids in the drain vessel and drain loop are at their proper levels.

8.2. Instrument setup.

8.2.1. Insert the sodium lamp in the turret and plug it in.

8.2.2. Enter the **turret lamp number** on the keyboard.

8.2.3. Enter the recommended **lamp milliamps** (mA).

8.2.4. Enter the **lamp slit width** using the **HIGH SLIT** key for flame AA.

8.2.5. Enter the **lamp wavelength** using the **LAMBDA PEAK** key.

8.2.6. For **signal keys**, enter the **CONTINUOUS** key for setup.

8.2.7. Press the **RECORD ABSORBANCE** key.

8.2.8. Set the **MODE** key to **ABSORBANCE**.

8.2.9. If the wavelength is >300 nm, use the **AA-MODE** key.

8.2.10. If the wavelength is <300 nm, use the **AA-BG MODE** key.

8.2.11. Press the **SETUP** key and adjust the lamp for maximum absorbance.

8.2.11.1. If the absorbance is >80, press the **GAIN** key and continue the lamp adjustment.

8.2.11.2. When the maximum absorbance is reached, turn the **SETUP** key to **OFF**.

8.2.12. Set the **TIME** key to 0.5 s.

8.2.13. Press the **AZ** (autozero) key. Absorbance should read zero.

8.2.14. Install the 10-cm burner head for air-acetylene analysis and the 5-cm head for nitrous oxide-acetylene.

8.2.15. Adjust the burner head height.

8.2.16. Set oxidant and acetylene flow from Table 8.2 in PE *Analytical Methods for AAS*. (source material 12.1).

8.2.17. Shut the burner shield door and light the flame using the flame **ON/OFF** key on the burner assembly.

8.2.18. Aspirate double-deionized water while the flame is lit.

8.2.19. Aspirate the standard and adjust the instrument for maximum absorbance.

8.3. Running samples.

8.3.1. Enter S1, S2, and S3 as directed for standards in *Analytical Methods for AAS*.

8.3.2. Reset **TIME** key to 3 to 6 s.

8.3.3. Press the signal **HOLD** key.

8.3.4. Select **AVERAGE** key if desired.

8.3.5. Aspirate the known standard and press the **READ** key.

8.3.6. Calculate the characteristic concentration (cc). The result should be within ±20% of the value in *Analytical Methods for AAS*.

8.3.7. Aspirate the calibration-curve standards and read the absorbance.

8.3.8. Switch the **MODE** key to **CONC** (concentration).

8.3.9. Aspirate the standards to set concentration keys as needed.

8.3.10. Read samples and QCs (blind and known).

8.3.11. Recalibrate the instrument with standards every 8 to 12 readings.

8.3.12. When finished, switch the flame **ON/OFF** key to **OFF**. Press the **CHECK FLOW** key on the auto burner control twice to relieve line pressure.

8.3.13. Turn the **POWER** switch on the automatic burner control to **OFF**.

8.3.14. Switch the PE 5000 to **STANDBY** mode.

9. Emergency Shutdown Procedure

9.1. In case of power failure, turn the **POWER** switch on the PE 5000 to **OFF**.

9.2. Turn the gas valves **OFF**.

9.3. Follow procedures for building power failure.

10. Calculations

10.1. Characteristic concentration (cc).

$$cc = \frac{C \times 0.0044}{A_s},$$

where cc = characteristic concentration for flame AA,
C = concentration of standard,
0.0044 = 1% absorbance, and
A_s = absorbance of standard.

11. Proper Waste Disposal Practices

11.1. Solid Waste

11.1.1. Solid waste contaminated with hazardous chemicals above the level of concern is not generated during the routine preparation of QC samples for analysis for inorganic contaminants.

11.1.2. If a solid waste is generated that may be contaminated at a level of concern, the appropriate paperwork is completed on a case-by-case basis.

11.1.2.1. A Waste Profile Request Form (WPRF) describing the solid waste is completed and sent to the Waste Management Group for review.

11.1.2.2. If the Waste Management Group determines that the solid waste is contaminated below the level of concern, the waste is disposed of as ordinary laboratory trash.

11.1.2.3. If the Waste Management Group determines that the solid waste is contaminated above the level of concern, pickup of the contaminated waste is requested as described in Sec. 9.3.

11.2. Liquid Waste

11.2.1. Liquid waste containing hazardous contaminants, such as solutions of trace metals, is accumulated in a coated glass jar in a secondary containment tray and is kept segregated from liquid waste contaminated with organic or radioactive substances or cyanide.

11.2.2. The bottle is labeled with a hazardous waste label and a label indicating its use for trace-metal waste.

11.2.3. The bottle is opened only for the period of time necessary to add waste to it.

11.2.4. When the bottle is full, it is capped and kept in the secondary containment tray pending pickup by the Waste Management Group.

11.2.5. A new bottle is labeled for further use.

11.3. Waste Pickup

11.3.1. Pickup by the Waste Management Group of solid waste or a full bottle of liquid waste containing trace metals is requested using the current Chemical Waste Disposal Request Form (CWDR). The current Waste

CONTROLLE

Profile Request Form (WPRF) that describes the waste is referenced on the CWDR.

11.3.2. The Waste Management Group picks up the waste for disposal in accord with Laboratory policy.

12. Source Materials

12.1. Perkin-Elmer Corp., *Analytical Methods for Atomic Absorption Spectroscopy* (Norwalk, CT, 1976).

12.2. Perkin-Elmer Corp., *Instructions: Zeeman/5000 System* (Norwalk, CT, 1982).

12.3. U.S. Environmental Protection Agency, "Methods for Chemical Analysis of Water and Wastes," EPA-600/4-79-020 (rev. March 1983).

12.4. U.S. Environmental Protection Agency, "Test Methods for Evaluation of Solid Waste: Laboratory Manual of Physical and Chemical Methods," SW-846 (Nov. 1986).

12.5. "Chemical, Hazardous, and Mixed Waste," Administrative Requirement 10-3, Chapter 1 in Los Alamos National Laboratory *Environment, Safety, and Health Manual* (most recent edition).

CONTROLLED

EM-9 ANALYTICAL PROCEDURE REVIEW AND APPROVAL

Method: Sodium in Water and Soil Extracts — Flame AA

Method No.: EI195 **Revision No.:** 0

Section Leader Charles Capel **Date:** 11/25/92

Group Leader [illegible] **Date:** 12/4/92

QA Concurrence Margaret A. Gautier **Date:** 12-2-92

CONTROLLED

THALLIUM ON FILTERS — GRAPHITE FURNACE AA

Analyte: Thallium	**Method No.:** EI200
Matrix: Filters	**Detection Limit:** 5.0 μg/L
Procedure: Graphite furnace atomic absorption	**Accuracy and Precision:** 100% ± 1.0% RSD
Effective Date: 09/30/91	**Authors:** Michael G. Bell Barbara J. Hemberger

SAFETY NOTE: Before beginning this procedure, read all of the Material Safety Data Sheets for the chemicals listed in Sec. 6. Read Sec. 4.3 of the EM-9 Safety Manual for information on personal protective clothing and equipment. Read Sec. 11 of this procedure and Source Material 12.5 for proper waste disposal practices.

1. Principle of Method

1.1. Thallium in solution may be readily determined by graphite furnace atomic absorption spectroscopy. The method is applicable to Tl on filters. Samples are acid-leached or prepared by total digestion with concentrated nitric acid.

2. Accuracy and Precision

2.1. The determination of thallium in 6 in-house quality control samples (84.6 μg/L) over an 8-month period had a mean of 84.3 μg/L and a relative standard deviation (RSD) of 1.0%.

3. Collection and Storage of Samples.

3.1. There are no special requirements for filters sealed in their containers.

4. Interferences

4.1. Contamination is of prime concern during sample preparation. Periodically clean the work area, including the bench top, to eliminate environmental contamination. Use acid-washed sample cups in the autosampler.

4.2. Chemical interferences can be controlled by the addition of a matrix modifier to all samples and standards. Refer to Perkin-Elmer chart 0993-8199 Rev. D (11/89), or to the PE *Methods of Analysis for AAS*, for the appropriate matrix modifier.

4.3. Silica from the glassware will grow into the sample solution during and following sample processing. To control this problem, use sterile disposable 50-mL polypropylene centrifuge tubes or 15-mL polypropylene tubes in the sample digestion steps.

5. Apparatus

5.1. Polypropylene tubes: 15- and 50-mL, sterile polypropylene, with caps.

5.2. Rainin pipettes with disposable tips.

5.3. Wash bottles: 125-mL, polypropylene, screw tops.

5.4. An automatic sample shaker.

5.5. Perkin-Elmer 5000 atomic absorption instrument: equipped with a Zeeman Graphite Furnace or equivalent.

5.6. Required gas for the above instrument is ultrapure argon.

5.7. Hot plate with aluminum heating block drilled to hold centrifuge tubes.

6. Reagents

6.1. Nitric acid (low-temperature redistilled acid, LTRD).

6.2. Double-deionized water.

6.3. ASTM Type I water (>10 MΩ/cm resistivity, <0.1 μmho/cm conductivity).

6.4. Appropriate matrix modifier for all samples, standards, and QCs.

6.5. Secondary standards for making the appropriate standard curves.

7. Sample Preparation Procedure

7.1. Place filters in 15-mL polypropylene tubes and add 10 mL of 1% nitric acid, LTRD or Ultrex grade, and put caps on securely.

7.1.1. Samples should include a blind QC, customer blank filter, and an extraction blank.

7.1.2. Put samples on the shaker for a minimum of 4 h for extraction.

7.1.3. Add the sample and standards to acid-cleaned sample cups.

7.1.4. For total digestion, place the sample filter in a 50-mL centrifuge tube and add 10 mL of concentrated nitric acid. Heat in an aluminum block to near dryness.

8. Instrument Procedure

8.1. Instrument power and gases check.

8.1.1. Turn the **POWER** switch to the PE5000 atomic absorption (AA) to **ON**.

8.1.2. Turn **ON** the argon supply valve after checking the pressure at the tank. Pressure must be over 100 psi or the tank must be changed.

8.1.3. Turn the AA switch from **STANDBY** mode to **RUN**.

8.1.4. Make sure the exhaust hood over the graphite furnace is functioning.

8.2. Instrument setup.

8.2.1. Insert the thallium lamp into the turret oriented toward the ETVAA and plug it in.

8.2.2. Enter **turret lamp number** into keyboard.

8.2.3. Enter recommended **lamp milliamps** (mA) or **watts** depending on lamp type (EDL/HCL).

8.2.3.1. Warm up the EDL and/or HCL lamp for a minimum of 20 min.

8.2.4. Enter **lamp slit width** using **LOW SLIT** key for ETVAA.

8.2.5. Enter **lamp wavelength** using **LAMBDA PEAK** key.

8.2.6. Turn AA switch inside lamp housing to **ICP/ZAA** position.

8.3. Keyboard setup.

8.3.1. Set **SIGNAL** key to **PK AREA** (peak area).

8.3.2. Turn **REC ABS** (record absorbance) signal key **ON**.

8.3.3. Enter **AVG** (average) number (if used).

8.3.4. Enter **CONC MODE** (concentration).

8.4. Furnace setup.

8.4.1. Press **ZAA** key.

8.4.2. Turn **ACCESSORY** knob to **ON** position.

8.4.3. Turn chiller **ON** and check that the water level is above the coils.

8.4.4. Check that the water bottle for distilled water rinse on the autosampler is full.

8.4.5. Turn **ON** the HGA-500 programmer.

8.4.5.1. Enter the temperature program for the element from the ETVAA procedure manual and store the procedure number.

8.5. Computer setup.

8.5.1. Turn PE AA Data System 10 computer **master switch** to **ON**.

8.5.2. Setup ID/WT file.

8.5.3. Turn **print button** on PE5000 keyboard **ON** and store the program.

8.6. Set up autosampler.

8.6.1. Recalibrate the standard curve every 8 to 12 samples.

8.6.2. Enter the number of standards (# stds).

8.6.3. Enter the last sample number (last samp).

8.6.4. Enter the sample volume (samp vol).

8.6.5. Enter the alternate volume (alt vol) for the matrix modifier if used.

8.6.6. Enter the instrument program number (inst prog).

8.6.7. Enter the HGA program number (HGA prog).

8.7. Graphite furnace setup.

8.7.1. Open the furnace and clean or replace the graphite tube. Use the tube with or without the platform depending on the element.

8.7.2. If inserting a new tube, condition it with the manual temperature key.

8.7.3. Using the alignment tool, reinsert the graphite tube and close the furnace.

8.7.4. Using the manual temperature key, set the pyrometer to the atomization temperature of the element and balance the lights (red/green) using the calibration (CAL) knob.

8.7.5. Place the AS40 in **STANDBY** mode and align the autosampler arm. Check the depth of the sample delivery inside the tube and inside the samples. Exit **STANDBY** mode.

8.7.6. Remove and check the furnace lenses. Reinsert the lenses and check the absorbance. If the absorbance reads above 0.100, clean the lenses.

8.7.7. Put samples and standards into the autosampler tray and cover with the dust cover to prevent contamination.

8.7.8. Put the matrix modifier in the holder position, if required.

8.7.9. Check the blank and standards manually.

8.7.10. Calculate the characteristic concentration (cc). If it is within ±20% of chart value (0993-8199 Rev. D 11/89) start the run.

8.7.11. Enter **collect data** mode on PE Data System 10 computer and follow instructions.

8.7.12. After run is complete, press to **DISK** key on PE Data System 10 twice.

8.7.13. Select **report** mode on the computer, follow instructions, and print out the final report.

8.7.14. When finished, shut off the chiller, argon gas supply, lamps, EDL power supply, and computer.

8.7.15. Place the autosampler, HGA Programmer, and PE5000 in standby mode.

9. Emergency Shutdown Procedure

9.1. In case of power failure, turn **POWER** switch on PE5000 AA to **OFF**.

9.2. Turn **OFF** the gas valves.

9.3. Follow building power failure procedures.

10. Calculations

10.1. Characteristic concentration (cc).

$$cc = \frac{C \times V \times 0.0044}{A_s},$$

where cc = characteristic concentration for ETVAA,
C = concentration of standard (μg/L),
V = sample aliquot (μL),
A_s = absorbance of standard, and
0.0044 = 1% absorbance.

11. Proper Waste Disposal Practices

11.1. Solid waste.

11.1.1. Solid waste contaminated with hazardous chemicals above the level of concern is not normally generated. This waste can be placed in the usual trash receptacles in the labs at TA-50.

11.1.2. If a solid waste is generated that may be contaminated at a level of concern, the appropriate paperwork is completed on a case-by-case basis.

11.1.2.1. Complete a Waste Profile Request Form (WPRF) describing the solid waste and send it to the Waste Management group for review.

11.1.2.2. If the Waste Management group determines that the solid waste is contaminated below the level of concern, dispose of the waste as ordinary laboratory trash.

11.1.2.3. If the Waste Management group determines that the solid waste is contaminated above the level of concern, request pickup of the contaminated waste as described in Sec. 11.3.

11.2. Liquid waste.

11.2.1. Accumulate liquid waste containing hazardous contaminants, such as solutions of trace metals above the limits posted for dumping at each lab sink at TA-50, in a coated glass jar in a secondary containment tray and keep it segregated from liquid waste contaminated with listed organics or cyanide greater than 0.5 ppm.

11.2.2. Label the bottle with a hazardous waste label, a corrosive label, a toxic label, and a label indicating its use for trace metal waste. Date the label.

11.2.3. Open the bottle only for the time necessary to add waste.

11.2.4. Keep full bottles in the secondary containment tray pending pickup by the Waste Management group.

11.2.5. Label a new bottle for further use.

11.2.6. Dump liquid inorganic wastes which do not contain any EPA-listed components, or which have toxic metals below the limits posted at lab sinks at TA-50, directly into the lab sink.

11.3. Waste pickup.

11.3.1. Request pickup by the Waste Management group of solid waste or a full bottle of liquid waste containing trace metals using the current Chemical Waste Disposal Request Form (CWDR). The current Waste Profile Request Form (WPRF) that describes the waste is referenced on the CWDR.

11.3.2. The Waste Management group picks up the waste for disposal in accord with Laboratory policy.

12. Source Material

12.1. *Analytical Methods for Atomic Absorption Spectrophotometry*, (Perkin-Elmer, Norwalk, Conn., 1976).

12.2. *Instructions: Zeeman/5000 System*, (Perkin-Elmer, Norwalk, Conn., 1982).

12.3. Methods for Chemical Analysis of Water and Wastes, EPA-600/4-79-020 U.S. Environmental Protection Agency (rev. March 1983).

12.4. Perkin-Elmer chart 0993-8199 Rev. D (11/89).

12.5. "Hazardous and Mixed Waste," Administrative Requirement 10-3, in *Environment, Safety, and Health Manual*, Los Alamos National Laboratory Manual, Chapter 1 (most recent edition).

Revisions or additions to the procedure are marked ( ). Where a section heading is marked the entire section has been revised.

CONTROLLED

EM-9 ANALYTICAL PROCEDURE REVIEW AND APPROVAL

Method: Thallium on Filters — Graphite Furnace AA

Method No.: EI200 **Revision No.:** 1

Section Leader [illegible] **Date:** [illegible]

Group Leader [illegible] **Date:** 5/12/93

QA Concurrence Margaret A Lautier **Date:** 5-12-93

CONTROLLED

THALLIUM IN WATER AND SOIL EXTRACTS – GRAPHITE FURNACE AA

Analyte: Thallium	**Method No.:** EI205
Matrix: Water, waste water, and soil extracts	**Detection Limit:** 5.0 μg/L
Procedure: Graphite furnace atomic absorption	**Accuracy and Precision:** 100% ± 1.0% RSD
Effective Date: 09/30/91	**Authors:** Michael G. Bell Barbara J. Hemberger

SAFETY NOTE: Before beginning this procedure, read all of the Material Safety Data Sheets for the chemicals listed in Sec. 6. Read Sec. 4.3 of the EM-9 Safety Manual for information on personal protective clothing and equipment. Read Sec. 11 of this procedure and Source Material 12.6 for proper waste disposal practices.

1. Principle of Method

1.1. This procedure is based on Environmental Protection Agency (EPA) method 279.2 and SW846 method 7841.

1.2. Thallium in solution may be readily determined by graphite furnace atomic absorption spectroscopy. The method is applicable to Tl in drinking, surface, and saline waters and in domestic and industrial wastes.

1.3. Drinking water free of particulate matter may be analyzed directly. Ground water, other aqueous samples, TCLP extracts, industrial wastes, soils, sludges, sediments, and other solid wastes require digestion before analysis.

2. Accuracy and Precision

2.1. The determination of thallium in 6 in-house quality control samples (84.6 μg/L) over an 8-month period had a mean of 84.3 μg/L and a relative standard deviation (RSD) of 1.0%.

3. Collection and Storage of Samples.

3.1. Preserve samples with nitric acid (HNO_3) at a pH <2.0. Complete analysis within 6 months.

4. Interferences

4.1. Contamination is of prime concern during sample preparation. Periodically clean the work area, including the bench top, to eliminate environmental contamination. Use acid-washed sample cups in the autosampler.

4.2. Chemical interferences can be controlled by the addition of a matrix modifier to all samples and standards. Refer to Perkin-Elmer chart 0993-8199 Rev. D (11/89), or to the PE *Methods of Analysis for AAS*, for the appropriate matrix modifier.

4.3. Silica from the glassware will grow into the sample solution during and following sample processing. To control this problem, use sterile disposable 50-mL polypropylene centrifuge tubes in the sample digestion steps.

5. Apparatus

5.1. Centrifuge tubes: 50-mL, sterile polypropylene.

5.2. Rainin pipettes with disposable tips.

5.3. Wash bottles: 125-mL, polypropylene, screw tops.

5.4. Hot plate: with aluminum heating block drilled to hold centrifuge tubes.

5.5. Perkin-Elmer 5000 atomic absorption instrument: equipped with a Zeeman graphite furnace or equivalent.

5.6. Required gas for the above instrument is ultrapure argon.

6. Reagents

6.1. Nitric acid (low-temperature redistilled acid, LTRD).

6.2. Hydrochloric acid (low-temperature redistilled acid, LTRD).

6.3. Double-deionized water.

6.4. ASTM Type I water (>10 MΩ/cm resistivity, <0.1 μhmo/cm conductivity).

6.5. Appropriate matrix modifier for all samples, standards, and QCs.

6.6. Secondary standards for making the appropriate standard curves.

7. Sample Preparation Procedure

7.1. To determine total recoverable elements in water, waste water, and soil extracts, take a 50-mL aliquot from an acid-preserved sample containing not more than 0.25% (wt/vol) total solids. Place the aliquot in a 50-mL disposable sterile polypropylene centrifuge tube.

7.1.1. Add 500 μL of LTRD HNO_3 and 250 μL of Ultrex or LTRD HCl to each sample.

7.1.2. Heat on a hot plate without boiling (approximately 85°C) until the volume is reduced to 5-10 mL.

7.1.3. Loosely cover the tube with the cap and reflux for 30 min.

7.1.4. Allow the sample to cool, and dilute to 50 mL with ASTM Type I water.

7.1.5. Run one digested blank and one digested spike for each digested batch.

7.1.6. Run a duplicate and a spike for 10-20% of the samples.

7.1.7. For TCLP samples, run a spike for every sample and 20% duplicates.

7.1.8. The analysis should be performed before the EPA regulatory holding times expire.

7.1.9. Add sample and standards to acid-cleaned sample cups.

8. Instrument Procedure

8.1. Instrument power and gases check.

8.1.1. Turn the **POWER** switch to the PE5000 atomic absorption (AA) to **ON**.

8.1.2. Turn **ON** the argon supply valve after checking the pressure at the tank. Pressure must be over 100 psi or the tank must be changed.

8.1.3. Turn the AA switch from **STANDBY** mode to **RUN**.

8.1.4. Make sure the exhaust hood over the graphite furnace is functioning.

8.2. Instrument setup.

8.2.1. Insert the thallium lamp into the turret oriented toward the ETVAA and plug it in.

8.2.2. Enter **turret lamp number** into keyboard.

8.2.3. Enter recommended **lamp milliamps** (mA) or **watts** depending on lamp type (EDL/HCL).

8.2.3.1. Warm up the EDL and/or HCL lamp for a minimum of 20 min.

8.2.4. Enter **lamp slit width** using **LOW SLIT** key for ETVAA.

8.2.5. Enter **lamp wavelength** using **LAMBDA PEAK** key.

8.2.6. Turn AA switch inside lamp housing to **ICP/ZAA** position.

8.3. Keyboard setup.

8.3.1. Set **SIGNAL** key to **PK AREA** (peak area).

8.3.2. Turn **REC ABS** (record absorbance) signal key **ON**.

8.3.3. Enter **AVG** (average) number (if used).

8.3.4. Enter **CONC MODE** (concentration).

8.4. Furnace setup.

8.4.1. Press **ZAA** key.

8.4.2. Turn **ACCESSORY** knob to **ON** position.

8.4.3. Turn chiller **ON** and check that the water level is above the coils.

8.4.4. Check that the water bottle for distilled water rinse on the autosampler is full.

8.4.5. Turn **ON** the HGA-500 programmer.

8.4.5.1. Enter the temperature program for the element from the ETVAA procedure manual and store the procedure number.

8.5. Computer setup.

8.5.1. Turn PE AA Data System 10 computer **master switch** to **ON**.

8.5.2. Set up ID/WT file.

8.5.3. Turn **print button** on PE5000 keyboard **ON** and store the program.

8.6. Set up autosampler.

8.6.1. Recalibrate the standard curve every 8 to 12 samples.

8.6.2. Enter the number of standards (# stds).

8.6.3. Enter the last sample number (last samp).

8.6.4. Enter the sample volume (samp vol).

8.6.5. Enter the alternate volume (alt vol) for the matrix modifier if used.

8.6.6. Enter the instrument program number (inst prog).

8.6.7. Enter the HGA program number (HGA prog).

8.7. Graphite furnace setup.

8.7.1. Open the furnace and clean or replace the graphite tube. Use the tube with or without the platform depending on the element.

8.7.2. If inserting a new tube, condition it with the manual temperature key.

8.7.3. Using the alignment tool, reinsert the graphite tube and close the furnace.

8.7.4. Using the manual temperature key, set the pyrometer to the atomization temperature of the element and balance the lights (red/green) using the calibration (CAL) knob.

8.7.5. Place the AS40 in **STANDBY** mode and align the autosampler arm. Check the depth of the sample delivery inside the tube and inside the samples. Exit **STANDBY** mode.

8.7.6. Remove and check the furnace lenses. Reinsert the lenses and check the absorbance. If the absorbance reads above 0.100, clean the lenses.

8.7.7. Put samples and standards into the autosampler tray and cover with the dust cover to prevent contamination.

8.7.8. Put the matrix modifier in the holder position, if required.

8.7.9. Check the blank and standards manually.

8.7.10. Calculate the characteristic concentration (cc). If it is within ±20% of chart value (0993-8199 Rev. D 11/89) start the run.

8.7.11. Enter **collect data** mode on PE Data System 10 computer and follow instructions.

8.7.12. After run is complete, press to **DISK** key on PE Data System 10 **twice**.

8.7.13. Select **report** mode on the computer, follow instructions, and print out the final report.

8.7.14. When finished, shut off chiller, argon gas supply, lamps, EDL power supply, and computer.

8.7.15. Place the autosampler, HGA Programmer, and PE5000 in standby mode.

9. Emergency Shutdown Procedure

9.1. In case of power failure, turn **POWER** switch on PE5000 AA to **OFF**.

9.2. Turn **OFF** the gas valves.

9.3. Follow building power failure procedures.

10. Calculations

10.1. Characteristic concentration (cc).

$$cc = \frac{C \times V \times 0.0044}{A_s},$$

where cc = characteristic concentration for ETVAA,
C = concentration of standard (μg/L),
V = sample aliquot (μL),
A_s = absorbance of standard, and
0.0044 = 1% absorbance.

11. Proper Waste Disposal Practices

11.1. Solid waste.

11.1.1. Solid waste contaminated with hazardous chemicals above the level of concern is not normally generated. This waste can be placed in the usual trash receptacles in the labs at TA-50.

11.1.2. If a solid waste is generated that may be contaminated at a level of concern, the appropriate paperwork is completed on a case-by-case basis.

11.1.2.1. Complete a Waste Profile Request Form (WPRF) describing the solid waste and send it to the Waste Management group for review.

11.1.2.2. If the Waste Management group determines that the solid waste is contaminated below the level of concern, dispose of the waste as ordinary laboratory trash.

11.1.2.3. If the Waste Management group determines that the solid waste is contaminated above the level of concern, request pickup of the contaminated waste as described in Sec. 11.3.

11.2. Liquid waste.

11.2.1. Accumulate liquid waste containing hazardous contaminants, such as solutions of trace metals above the limits posted for dumping at each lab sink at TA-50, in a coated glass jar in a secondary containment tray and keep it segregated from liquid waste contaminated with listed organics or cyanide greater than 0.5 ppm.

11.2.2. Label the bottle with a hazardous waste label, a corrosive label, a toxic label, and a label indicating its use for trace metal waste. Date the label.

11.2.3. Open the bottle only for the time necessary to add waste.

11.2.4. Keep full bottles in the secondary containment tray pending pickup by the Waste Management group.

11.2.5. Label a new bottle for further use.

11.2.6. Dump liquid inorganic wastes which do not contain any EPA-listed components, or which have toxic metals below the limits posted at lab sinks at TA-50, directly into the lab sink.

11.3. Waste pickup.

11.3.1. Request pickup by the Waste Management group of solid waste or a full bottle of liquid waste containing trace metals using the current Chemical Waste Disposal Request Form (CWDR). The current Waste Profile Request Form (WPRF) that describes the waste is referenced on the CWDR.

11.3.2. The Waste Management group picks up the waste for disposal in accord with Laboratory policy.

12. Source Material

12.1. *Analytical Methods for Atomic Absorption Spectrophotometry*, (Perkin-Elmer, Norwalk, Conn., 1976).

12.2. *Instructions: Zeeman/5000 System*, (Perkin-Elmer, Norwalk, Conn., 1982).

12.3. Methods for Chemical Analysis of Water and Wastes, EPA-600/4-79-020 U.S. Environmental Protection Agency, (rev. March 1983).

12.4. Perkin-Elmer chart 0993-8199 Rev. D (11/89).

12.5. "Test Methods for Evaluation of Solid Waste: Laboratory Manual of Physical and Chemical Methods," EPA report no. SW-846.

12.6. "Chemical, Hazardous, and Mixed Waste," Administrative Requirement 10-3, in *Environment, Safety, and Health Manual*, Los Alamos National Laboratory Manual, Chapter 1 (most recent edition).

Revisions or additions to the procedure are marked ( ). Where a section heading is marked the entire section has been revised.

CONTROLLED

EM-9 ANALYTICAL PROCEDURE REVIEW AND APPROVAL

Method: Thallium in Water and Soil Extracts — Graphite Furnace AA

Method No.: EI205 **Revision No.:** 1

Section Leader [illegible] **Date:** [illegible]

Group Leader [illegible] **Date:** 5/12/93

QA Concurrence Margaret A Lautier **Date:** 5-12-93

CONTROLLED

ZINC IN WATER AND SOIL EXTRACTS — FLAME AA

Analyte: Zinc	**Method No.:** EI210
Matrix: Water, waste water, and soil extracts	**Detection Limit:** 5.0 μg/L
Procedure: Flame atomic absorption	**Accuracy and Precision:** 100% ± 4.0% RSD
Effective Date: 09/23/91	**Authors:** Michael G. Bell Barbara J. Hemberger

SAFETY NOTE: Before beginning this procedure, read all of the Material Safety Data Sheets for the chemicals listed in Sec. 6. Read Sec. 4.3 of the EM-9 Safety Manual for information on personal protective clothing and equipment. Read Sec. 11 of this procedure and Source Material 12.5 for proper waste disposal practices.

1. Principle of Method

1.1. This procedure is based on Environmental Protection Agency (EPA) method 289.1 and SW-846 method 7950.

1.2. Zinc in solution may be readily determined by atomic absorption spectroscopy. The method is simple and rapid and is applicable to Zn in drinking, surface, and saline waters and in domestic and industrial wastes.

1.3. Drinking water free of particulate matter may be analyzed directly. Ground water, other aqueous samples, TCLP extracts, industrial wastes, soils, sludges, sediments, and other solid wastes require digestion before analysis.

2. Accuracy and Precision

2.1. The determination of zinc in nine in-house quality control samples (66 μg/L) over a nine-month period had a mean of 67.2 μg/L and a relative standard deviation (RSD) of 4.0%.

3. Collection and Storage of Samples

3.1. Preserve samples with nitric acid (HNO_3) at a pH <2.0. Complete analysis within six months.

4. Interferences

4.1. Contamination is of prime concern during sample preparation. The work area, including the bench top, should be periodically cleaned to eliminate environmental contamination.

4.2. Chemical interferences are matrix dependent.

4.3. Silica from the glassware will grow into the sample solution during and following sample processing. Use sterile disposable 50-mL polypropylene centrifuge tubes in the sample digestion steps to control this problem.

5. Apparatus

5.1. Centrifuge tubes: 50-mL, sterile polypropylene.

5.2. Rainin pipettes with disposable tips.

5.3. Wash bottles: 125-mL, polypropylene, screw tops.

5.4. Hot plate: with aluminum heating block drilled to hold centrifuge tubes.

5.5. Perkin-Elmer 5000 atomic absorption spectrometer or equivalent.

5.6. Gases for the above instrument: air, acetylene, nitrous oxide, argon.

6. Reagents

6.1. Nitric acid (low-temperature redistilled acid, LTRD).

6.2. Hydrochloric acid (low-temperature redistilled acid, LTRD).

6.3. Double-deionized water.

6.4. ASTM Type I water (>10 MΩ/cm resistivity, <0.1 μmho/cm conductivity).

7. Sample Preparation Procedure

7.1. To determine total recoverable elements in water or waste water, take a 50-mL aliquot from an acid-preserved sample containing not more than 0.25% (wt/vol) total solids. Place the aliquot in a sterile disposable 50-mL polypropylene centrifuge tube.

7.1.1. Add 500 μL of LTRD HNO_3 and 250 μL of Ultrex or LTRD HCl to each sample.

7.1.2. Heat on a hot plate without boiling (approximately 85°C) until the final volume is reduced to 5-10 mL.

7.1.3. Loosely cover the tube with the cap and reflux for 30 min.

7.1.4. Allow the sample to cool and dilute to 50 mL with ASTM Type I water

7.1.5. Run one digested blank and one digested spike with each digested batch.

7.1.6. Run a duplicate and a spike for 10-20% of the samples.

7.1.7. For TCLP samples, run a spike for every sample and run 20% duplicates.

8. Instrument Procedure

8.1. Power instrument and check gases.

8.1.1. Turn the **POWER** switch on the Perkin-Elmer (PE) 5000 atomic absorption (AA) spectrometer to **ON**.

8.1.2. Turn the **POWER** switch on the PE 5000 automatic burner control to **ON**.

8.1.3. Turn the **AIR SUPPLY** valve **ON**.

8.1.4. Check the pressure in the acetylene tank; if it is <100 psi, change the tank. Turn the **ACETYLENE SUPPLY** valve **ON**.

8.1.5. Turn the **NITROUS OXIDE SUPPLY** valve **ON**, if necessary.

8.1.6. Turn the AA switch from **STANDBY** mode to **RUN**.

8.1.7. Make sure the exhaust hood is functioning.

8.1.8. Make sure the fluids in the drain vessel and drain loop are at their proper levels.

8.2. Instrument setup.

8.2.1. Insert the zinc lamp in the turret and plug it in.

8.2.2. Enter the **turret lamp number** on the keyboard.

8.2.3. Enter the recommended **lamp milliamps** (mA).

8.2.4. Enter the **lamp slit width** using the **HIGH SLIT** key for flame AA.

8.2.5. Enter the **lamp wavelength** using the **LAMBDA PEAK** key.

8.2.6. For **signal keys**, enter the **CONTINUOUS** key for setup.

8.2.7. Press the **RECORD ABSORBANCE** key.

8.2.8. Set the **MODE** key to **ABSORBANCE**.

8.2.9. If the wavelength is >300 nm, use the **AA-MODE** key.

8.2.10. If the wavelength is <300 nm, use the **AA-BG MODE** key.

8.2.11. Press the **SETUP** key and adjust the lamp for maximum absorbance.

8.2.11.1. If the absorbance is >80, press the **GAIN** key and continue the lamp adjustment.

8.2.11.2. When the maximum absorbance is reached, turn the **SETUP** key to **OFF**.

8.2.12. Set the **TIME** key to 0.5 s.

8.2.13. Press the **AZ** (autozero) key. Absorbance should read zero.

8.2.14. Install the 10-cm burner head for air-acetylene analysis and the 5-cm head for nitrous oxide-acetylene.

8.2.15. Adjust the burner head height.

8.2.16. Set oxidant and acetylene flow from Table 8.2 in PE *Analytical Methods for AAS*. (source material 12.1).

8.2.17. Shut the burner shield door and light the flame using the flame **ON/OFF** key on the burner assembly.

8.2.18. Aspirate double-deionized water while the flame is lit.

8.2.19. Aspirate the standard and adjust the instrument for maximum absorbance.

8.3. Running samples.

8.3.1. Enter S1, S2, and S3 as directed for standards in *Analytical Methods for AAS*.

8.3.2. Reset **TIME** key to 3 to 6 s.

8.3.3. Press the signal **HOLD** key.

8.3.4. Select **AVERAGE** key if desired.

8.3.5. Aspirate the known standard and press the **READ** key.

CONTROLLED

HSE-9 ANALYTICAL PROCEDURE APPROVAL

Method: Atomic Absorption Methods — Method 7000 (SW-846)

Method No.: WI100 **Revision No.:** 0

Section Leader Michael P. Ball **Date:** 11-16-90

Group Leader [illegible] **Date:** 11/27/90

QA Concurrence Margaret A. Gautier **Date:** 11-16-90

CONTROLLED

MERCURY IN SOLID OR SEMISOLID WASTE — CVAA (EPA METHOD 7471)

Analyte: Mercury	**Method No.:** WI110
Matrix: Soil, sediment, sludges	**Minimum Detectable Concentration:** 0.2 μg/L
Procedure: Cold vapor atomic absorption (CVAA)	**Accuracy and Precision:** See Section 2
Effective Date: 01/01/88 to 08/28/92	**Author:** Mary Carol Williams

SAFETY NOTE: Before beginning this procedure, read all of the Material Safety Data Sheets for the chemicals listed in Sec. 7. Read Sec. 4.3 of the EM-9 Safety Manual for information on personal protective clothing and equipment.

1. Principle of Method

1.1. Method 7471 is approved for measuring total mercury (organic and inorganic) in soils, sediments, bottom deposits, and sludge-type materials. All samples must be subjected to an appropriate dissolution step prior to analysis.

1.2. Prior to analysis, the solid or semisolid samples must be prepared according to the procedures discussed in this method.

1.3. Method 7471, a cold vapor atomic absorption (CVAA) method, is based on the absorption of radiation at the 253.7-nm wavelength by mercury vapor. The mercury is reduced to the elemental state and aerated from solution in a closed system. The mercury vapor passes through a cell positioned in the light path of an atomic absorption spectrophotometer. Absorbance (peak area) is measured as a function of mercury concentration.

1.4. The typical detection limit for this method is 0.2 μg/L in solution.

2. Accuracy and Precision

2.1. Precision and accuracy data are available in Method 245.5 of *Methods for Chemical Analysis of Water and Waste* (see Source Material 9.2).

3. Quality Control

3.1. All quality control data should be kept up to date and available.

3.2. Calibration curves must be composed of a minimum of one blank and three standards. A calibration curve should be made for every hour of continuous sample analysis.

3.3. Dilute samples if they are more concentrated than the highest standard or if they fall on the plateau of a calibration curve.

3.4. Employ a minimum of one blank per sample batch to determine if contamination or any memory effects are occurring.

4. Interferences

4.1. Potassium permanganate is added to eliminate possible interference from sulfide. Concentrations as high as 20 mg/L of sulfide as sodium sulfide do not interfere with the recovery of added inorganic mercury from Type II water.

4.2. Copper has also been reported to interfere; however, copper concentrations as high as 10 mg/L had no effect on recovery of mercury from spiked samples.

4.3. Seawaters, brines, and industrial effluents high in chlorides require additional permanganate (as much as 25 mL) because during the oxidation step, chlorides are converted to free chlorine, which also absorbs radiation of 253.7 nm. Care must therefore be taken to ensure that free chlorine is absent before the mercury is reduced and swept into the cell. This may be accomplished by using an excess of hydroxylamine sulfate reagent (25 mL). In addition, the dead air space in the biological oxygen demand bottle must be purged before adding stannous sulfate. Both inorganic and organic mercury spikes have been quantitatively recovered from seawater by using this technique.

4.4. Certain volatile organic materials that absorb at this wavelength may also cause interference. A preliminary run without reagents should determine if this type of interference is present.

5. Sample Collection and Preservation

5.1. All sample containers must be prewashed with detergents, acids, and Type II water. Plastic or glass containers are suitable.

5.2. Aqueous samples must be acidified to a pH <2 with nitric acid. Solid samples must be refrigerated until digestion.

5.3. For solids or semisolids, moisture may be driven off in a drying oven at a temperature of 60°C.

CONTROLLE

6. Apparatus

6.1. Atomic absorption spectrometer (AAS): atomic absorption unit with an open sample presentation area in which to mount the absorption cell. Model 5000, Perkin-Elmer or equivalent. Instrument settings recommended by the manufacturer should be followed. Instruments designed specifically for the measurement of mercury using the cold vapor technique are commercially available and may be substituted for the atomic absorption spectrometer.

6.2. Mercury electrodeless discharge lamp.

6.3. Vapor generator assembly (VGA): with absorption cell and burner head. Model VGA-76, Varian Instrument Group Marketing, Sunnyvale, California.

6.4. Absorption cell: standard spectrophotometer cells, 10 cm long, with quartz end windows, may be used. Suitable cells may be constructed from Plexiglas tubing (1-in.-o.d. by 4.5-in.). The ends are ground perpendicular to the longitudinal axis, and quartz windows (1-in.-diam by 1/16-in.-thick) are cemented in place. The cell is strapped to a burner for support and aligned in the light beam by use of two 2-in. by 2-in. cards. Holes of 1 in. diam are cut in the center of each card. The cards are placed over each end of the cell. The cell is positioned and adjusted vertically and horizontally to give the maximum transmittance.

6.5. Pipettor: 10-mL Brinkman Macro-transferpettor.

6.6. Volumetric pipettes: class A, various sizes.

6.7. Volumetric flasks: class A, various sizes.

6.8. Centrifuge tubes: 50-mL, polyethylene.

6.9. Small reading lamp with 60-W bulb: may be used to prevent condensation of moisture inside the cell. The lamp should be positioned to shine on the absorption cell so that the air temperature in the cell is about 10° C above ambient.

7. Reagents

7.1. ASTM Type II water (double-deionized, less than 18 μmhos/cm). Water should be monitored for impurities.

7.2. Aqua regia. Prepare immediately before use by carefully adding three volumes of concentrated HCl to one volume of concentrated HNO_3.

7.3. Sulfuric acid (0.5 N). Dilute 14.0 mL of concentrated sulfuric acid to 1 L.

7.4. Stannous chloride. Dissolve 250 g of $SnCl_2$ and 200 mL of concentrated HCl in 500 mL of distilled deionized water in a 1000-mL volumetric flask. Dilute to volume.

7.5. Sodium chloride-hydroxylamine chloride solution. Dissolve 50 g of sodium chloride and 50 g of hydroxylamine chloride in distilled water and dilute to 500 mL.

7.6. Potassium permanganate (mercury-free, 5% solution, w/v). Dissolve 50 g of potassium permanganate in 1 L of Type II water.

7.7. Mercury stock standard (1000 mg/L). Fisher Scientific.

7.8. Chromium stock solution (1000 mg/L). Tare a 50-mL volumetric flask. Accurately weigh 141.5 ± 0.2 mg of analytical-grade $K_2Cr_2O_7$ into the flask. Dissolve the salt and dilute the standard to volume with Type II water.

7.9. Mercury spike solution. Add 50 μL of the 1000-mg/L mercury stock solution and 10 mL of the 1000-mg/L chromium stock solution to a 100-mL volumetric flask and dilute to volume with 10% HNO_3.

8. Procedure

8.1. Sample preparation.

8.1.1. Weigh triplicate 0.2-g aliquots of untreated sample into 50-mL polyethylene tubes. To spike samples, add 100 μL of spike solution (Step 7.8) to the samples in the polyethylene tubes. Add 5 mL of Type II water and 5 mL of aqua regia. Heat for 2 min in a water bath at 95°C.

8.1.2. Cool and add 15 mL of Type II water and 15 mL of potassium permanganate solution to each sample bottle. Mix thoroughly and place in the water bath for 30 min at 95°C.

CAUTION: Do this addition in a hood because Cl_2 could be evolved.

8.1.3. Weigh a separate aliquot of the sample before and after drying at 95°C to determine percent solids and correct sample results for moisture before reporting.

$$\%S = \frac{W \times 100}{W_t} ,$$

CONTROLLED

where %S = percent solids,
W = weight of solid, and
W_t = total weight of waste.

8.2. Standard preparation.

8.2.1. Stock standard A (10 mg/L). Dilute the 1000-mg/L mercury stock standard (Fisher Scientific) 1:100 by diluting 1.0 mL of stock standard to 100 mL with 1% HNO_3. Store in a light-protected flask.

8.2.2. Stock standard B (100 µg/L). Dilute stock standard A 1:100 by diluting 1.0 mL of Stock A to 100 mL with 1% HNO_3.

8.2.3. Working standards. Add the following volumes of stock standard B to approximately 10 mL of 1% HNO_3 in 100-mL volumetric flasks. Add 5 mL of aqua regia and heat for 2 min in a water bath at 95°C. Add 15 mL of $KMnO_4$ solution to each bottle and return to the water bath for 30 min. Cool just prior to analysis.

Stock Standard B (µL)	Mercury (µg/L)
200	0.4
500	1.0
1000	2.0
2000	4.0

8.2.4. Just before analysis, add 6 mL of sodium chloride-hydroxylamine chloride to reduce the excess permanganate. Swirl gently. Dilute to 50 mL with 1% HNO_3. Carefully add a magnetic stirring bar. Allow the solution to stir gently on a magnetic stirrer until gas evolution ceases.

8.2.5. Calibrate the AAS in concentration mode using one or two standards. Standard 1 must be in the linear range (<0.25 absorbance units) and standard 2 is normally twice standard 1. Lower-concentration standards are read as samples (see table in Step 8.2.3).

8.3. Instrument setup.

8.3.1. Optimize the AAS instrument. Align the absorption cell using an iron hollow cathode lamp (for brightness). See the VGA-76 operational manual for details (Source Material 9.5).

8.3.2. Using **SET UP**, adjust the mercury lamp position to its peak value. If the peak value reads 99, push **GAIN** to reset to midrange.

8.3.3. The following values are keyed in on the keyboard.

- Wavelength - 253.7 nm (AA-BG)
- Slit width - 0.7 nm
- Concentration of standard - 4.000 μg/L for water, 20.000 μg/L for sludges
- Read time - 6.0 s
- Peak area mode
- Average of three readings

8.4. Vapor generator setup.

8.4.1. Fill reagent container A with stannous chloride solution and container B with Type II water. Engage the pump tubes and turn the VGA-76 on. Aspirate Type II water in reagent and sample tubes for 1 min. Press **READ** and autozero the instrument. Place the reagent tubes in respective reagents and read the resulting blank absorbance after 1 min. If this reading is greater than 0.1 absorbance units, the reagents are contaminated and need to be remade. If the blank is less than 0.01 absorbance units, set **AZ**.

8.4.2. Aspirate calibration standards (lowest to highest) and check linearity, characteristic mass, and repeatability with previous analyses.

8.4.3. Push **PEAK AREA** and rerun blank and calibration standards, quality control samples, and samples. Always wait 45 - 60 s after sample introduction before reading the concentrations so that the system can stabilize. Record concentrations in bound Laboratory notebook.

8.4.4. After analyses are completed, flush the system with Type II water for 5 min. Turn the VGA-76 off and remove the pump tubes from the rollers. Turn the VGA-76 on and allow nitrogen to flow through the system for 5 min. Turn the VGA-76 off and disconnect it from the Perkin-Elmer 5000. Remove the absorption cell. Soak the absorption cell and gas/liquid separator in 1% HNO_3 overnight. Rinse in Type II water and dry.

8.4.5. Refer to the VGA-76 operation manual for specific details (Source Material 9.5).

8.5. Analyze all Toxicity Characteristic Leaching Procedure (TCLP) extracts, all samples analyzed as part of a delisting petition, and all samples that suffer from matrix interferences by the method of standard additions (see Procedure WI100, Section 4.6).

CONTROLLE

8.6. Analyses must include 10% duplicates, 10% spiked samples, and 10% quality control samples.

8.7. Calculate metal concentrations (1) by the method of standard additions, (2) from a calibration curve, or (3) directly from the instrument's concentration read-out. All dilution or concentration factors must be used. Concentrations reported for multiphased or wet samples must be appropriately qualified (e.g., 5 $\mu g/g$ dry weight). Correction for moisture may be calculated using the following equation or from the LOTUS™ program called "HGCALC."

$$C = \frac{C_s \times V}{W \times S} ,$$

where C = concentration of Hg in dried sample ($\mu g/kg$),
C_s = concentration of solution (ng/mL),
V = diluted volume (mL),
W = weight of digested sample (g), and
S = percent solids/100.

9. Source Materials

9.1. American Public Health Association, American Waterworks Association, and Water Pollution Control Federation, *Standard Methods for the Examination of Water and Wastewater*, 16th ed., Method 320A (American Public Health Association, Washington, DC, 1980).

9.2. Environmental Monitoring and Support Laboratory, *Methods for Chemical Analysis of Water and Waste*, Method 245.1 (Office of Research and Development, US Environmental Protection Agency, Cincinnati, Ohio, 1983).

9.3. Perkin-Elmer, *Analytical Methods for Atomic Absorption Spectrophotometry* (Perkin-Elmer, Norwalk, Connecticut, 1982).

9.4. "Automated Cold Vapor Determination of Mercury: EPA Stannous Chloride Methodology," Report Number AA-51, Varian Instrument Group, AA Resource Center, Park Ridge, Illinois (1976).

9.5. *Vapor Generator Assembly Operation Manual* (Varian Instrument Group, AA Resource Center, Park Ridge, Illinois, 1976).

9.6. A. Gaskill, "Compilation and Evaluation of RCRA Method Performance Data," Work Assignment No. 2, EPA Contract No. 68-01-7075 (September 1986).

CONTROLLED

HSE-9 ANALYTICAL PROCEDURE APPROVAL

Method: Mercury in Solid or Semisolid Waste – CVAA (EPA Method 7471)

Method No.: WI110 **Revision No.:** 0

Section Leader Michael G. Bell **Date:** 11-14-90

Group Leader [illegible] **Date:** 11/15/90

QA Concurrence Margaret A. Gautier **Date:** 11-13-90

CONTROLLED

MERCURY IN LEACHATES, WATER, AND WASTE WATER — CVAA

Analyte: Mercury	**Method No.:** WI120
Matrix: Water, waste water, extracts, leachates	**Detection Limit:** 0.2 μg/L **Range:** 0.2 - 4.0 μg/L
Procedure: Cold vapor atomic absorption	**Accuracy and Precision:** 98% ± 15% RSD of EPA WP475/4
Effective Date: 06/17/85 to 07/15/92	**Author:** Mary Carol Williams

SAFETY NOTE: Before beginning this procedure, read all of the Material Safety Data Sheets for the chemicals listed in Sec. 6. Read Sec. 4.3 of the EM-9 Safety Manual for information on personal protective clothing and equipment.

1. Principle of Method

1.1. Organic and inorganic mercury compounds are broken down and converted to mercuric (Hg^{+2}) ions. The Hg^{+2} ions are reduced to free mercury which is swept into a quartz tube in the light path by nitrogen gas. Absorbance (peak area) is measured at 253.7 nm as a function of mercury concentration.

1.2. An electrodeless discharge lamp is used to provide a source characteristic for each element.

2. Accuracy, Precision, and Percent Recovery

2.1. The determination of Hg in Environmental Protection Agency SRM WP475/4 (0.75 ± 0.22 μg/L) over a period of 12 months (N = 9) had a mean of 0.74 μg/L and a relative standard deviation (RSD) of 15%.

2.2. Fifty-six samples spiked with 10 μg/L of Hg over a period of 12 months had an average recovery of 98% and an RSD of 12%. The percent recovery ranged from 84% to 118%.

3. Interferences

3.1. Possible interference from sulfide (up to 20 mg $S^{=}$/L) is reduced by the addition of potassium permanganate.

3.2. Copper has been reported to interfere. No effect was reported at copper concentrations as high as 10 mg Cu^{+2}/L.

3.3. High chloride interference is reduced by the addition of permanganate. Free chlorine (which absorbs at 253 nm) is released after the addition of hydroxylamine chloride by vigorous stirring.

3.4. Some volatile organics may also absorb at this wavelength. Use of a background corrector is required. A preliminary run without reagents should determine if this type of interference is present.

4. Collection and Storage of Samples

4.1. Samples are collected in polyethylene bottles and are immediately acidified to pH < 2 with concentrated HNO_3.

4.2. Samples must be digested and analyzed within 28 days (see Step 8.2).

5. Apparatus

5.1. Atomic absorption spectrophotometer (AAS): Model 5000, Perkin-Elmer, Norwalk, Connecticut.

5.2. Vapor generator assembly (VGA): with absorption cell and burner head. Model VGA-76, Varian Instrument Group Marketing, Sunnyvale, California.

5.3. Data station: Model 3600, Perkin-Elmer, Norwalk, Connecticut.

5.4. Electrodeless discharge lamp.

5.5. Pipettor: 10-mL Brinkman Macro-transferpettor.

5.6. Volumetric pipettes: class A, various sizes.

5.7. Volumetric flasks: class A, various sizes.

5.8. Disposable polyethylene centrifuge tubes.

5.9. Eppendorf pipettes: 1-mL.

5.10. Repipette dispensers.

6. Reagents

6.1. Nitrogen (100 psi minimum tank pressure and 30-50 psi regulator pressure).

6.2. ASTM Type II water (double-deionized, less than 18 μmhos/cm). Water should be monitored for impurities.

6.3. Sulfuric acid (concentrated, atomic-absorption-grade).

CONTROLLED

6. Apparatus

6.1. Atomic absorption spectrometer (AAS): atomic absorption unit with an open sample presentation area in which to mount the absorption cell. Model 5000, Perkin-Elmer or equivalent. Instrument settings recommended by the manufacturer should be followed. Instruments designed specifically for the measurement of mercury using the cold vapor technique are commercially available and may be substituted for the atomic absorption spectrometer.

6.2. Mercury electrodeless discharge lamp.

6.3. Vapor generator assembly (VGA): with absorption cell and burner head. Model VGA-76, Varian Instrument Group Marketing, Sunnyvale, California.

6.4. Absorption cell: standard spectrophotometer cells, 10 cm long, with quartz end windows, may be used. Suitable cells may be constructed from Plexiglas tubing (1-in.-o.d. by 4.5-in.). The ends are ground perpendicular to the longitudinal axis, and quartz windows (1-in.-diam by 1/16-in.-thick) are cemented in place. The cell is strapped to a burner for support and aligned in the light beam by use of two 2-in. by 2-in. cards. Holes of 1 in. diam are cut in the center of each card. The cards are placed over each end of the cell. The cell is positioned and adjusted vertically and horizontally to give the maximum transmittance.

6.5. Pipettor: 10-mL Brinkman Macro-transferpettor.

6.6. Volumetric pipettes: class A, various sizes.

6.7. Volumetric flasks: class A, various sizes.

6.8. Centrifuge tubes: 50-mL, polyethylene.

6.9. Small reading lamp with 60-W bulb: may be used to prevent condensation of moisture inside the cell. The lamp should be positioned to shine on the absorption cell so that the air temperature in the cell is about 10° C above ambient.

7. Reagents

7.1. ASTM Type II water (double-deionized, less than 18 μmhos/cm). Water should be monitored for impurities.

7.2. Aqua regia. Prepare immediately before use by carefully adding three volumes of concentrated HCl to one volume of concentrated HNO_3.

7.3. Sulfuric acid (0.5 N). Dilute 14.0 mL of concentrated sulfuric acid to 1 L.

7.4. Stannous chloride. Dissolve 250 g of $SnCl_2$ and 200 mL of concentrated HCl in 500 mL of distilled deionized water in a 1000-mL volumetric flask. Dilute to volume.

7.5. Sodium chloride-hydroxylamine chloride solution. Dissolve 50 g of sodium chloride and 50 g of hydroxylamine chloride in distilled water and dilute to 500 mL.

7.6. Potassium permanganate (mercury-free, 5% solution, w/v). Dissolve 50 g of potassium permanganate in 1 L of Type II water.

7.7. Mercury stock standard (1000 mg/L). Fisher Scientific.

7.8. Chromium stock solution (1000 mg/L). Tare a 50-mL volumetric flask. Accurately weigh 141.5 ± 0.2 mg of analytical-grade $K_2Cr_2O_7$ into the flask. Dissolve the salt and dilute the standard to volume with Type II water.

7.9. Mercury spike solution. Add 50 μL of the 1000-mg/L mercury stock solution and 10 mL of the 1000-mg/L chromium stock solution to a 100-mL volumetric flask and dilute to volume with 10% HNO_3.

8. Procedure

8.1. Sample preparation.

8.1.1. Weigh triplicate 0.2-g aliquots of untreated sample into 50-mL polyethylene tubes. To spike samples, add 100 μL of spike solution (Step 7.8) to the samples in the polyethylene tubes. Add 5 mL of Type II water and 5 mL of aqua regia. Heat for 2 min in a water bath at 95°C.

8.1.2. Cool and add 15 mL of Type II water and 15 mL of potassium permanganate solution to each sample bottle. Mix thoroughly and place in the water bath for 30 min at 95°C.

CAUTION: Do this addition in a hood because Cl_2 could be evolved.

8.1.3. Weigh a separate aliquot of the sample before and after drying at 95°C to determine percent solids and correct sample results for moisture before reporting.

$$\%S = \frac{W \times 100}{W_t} ,$$

where %S = percent solids,
W = weight of solid, and
W_t = total weight of waste.

8.2. Standard preparation.

8.2.1. Stock standard A (10 mg/L). Dilute the 1000-mg/L mercury stock standard (Fisher Scientific) 1:100 by diluting 1.0 mL of stock standard to 100 mL with 1% HNO_3. Store in a light-protected flask.

8.2.2. Stock standard B (100 μg/L). Dilute stock standard A 1:100 by diluting 1.0 mL of Stock A to 100 mL with 1% HNO_3.

8.2.3. Working standards. Add the following volumes of stock standard B to approximately 10 mL of 1% HNO_3 in 100-mL volumetric flasks. Add 5 mL of aqua regia and heat for 2 min in a water bath at 95°C. Add 15 mL of $KMnO_4$ solution to each bottle and return to the water bath for 30 min. Cool just prior to analysis.

Stock Standard B (μL)	Mercury (μg/L)
200	0.4
500	1.0
1000	2.0
2000	4.0

8.2.4. Just before analysis, add 6 mL of sodium chloride-hydroxylamine chloride to reduce the excess permanganate. Swirl gently. Dilute to 50 mL with 1% HNO_3. Carefully add a magnetic stirring bar. Allow the solution to stir gently on a magnetic stirrer until gas evolution ceases.

8.2.5. Calibrate the AAS in concentration mode using one or two standards. Standard 1 must be in the linear range (<0.25 absorbance units) and standard 2 is normally twice standard 1. Lower-concentration standards are read as samples (see table in Step 8.2.3).

8.3. Instrument setup.

8.3.1. Optimize the AAS instrument. Align the absorption cell using an iron hollow cathode lamp (for brightness). See the VGA-76 operational manual for details (Source Material 9.5).

8.3.2. Using **SET UP**, adjust the mercury lamp position to its peak value. If the peak value reads 99, push **GAIN** to reset to midrange.

8.3.3. The following values are keyed in on the keyboard.

- Wavelength - 253.7 nm (AA-BG)
- Slit width - 0.7 nm
- Concentration of standard - 4.000 μg/L for water, 20.000 μg/L for sludges
- Read time - 6.0 s
- Peak area mode
- Average of three readings

8.4. Vapor generator setup.

8.4.1. Fill reagent container A with stannous chloride solution and container B with Type II water. Engage the pump tubes and turn the VGA-76 on. Aspirate Type II water in reagent and sample tubes for 1 min. Press **READ** and autozero the instrument. Place the reagent tubes in respective reagents and read the resulting blank absorbance after 1 min. If this reading is greater than 0.1 absorbance units, the reagents are contaminated and need to be remade. If the blank is less than 0.01 absorbance units, set **AZ**.

8.4.2. Aspirate calibration standards (lowest to highest) and check linearity, characteristic mass, and repeatability with previous analyses.

8.4.3. Push **PEAK AREA** and rerun blank and calibration standards, quality control samples, and samples. Always wait 45 - 60 s after sample introduction before reading the concentrations so that the system can stabilize. Record concentrations in bound Laboratory notebook.

8.4.4. After analyses are completed, flush the system with Type II water for 5 min. Turn the VGA-76 off and remove the pump tubes from the rollers. Turn the VGA-76 on and allow nitrogen to flow through the system for 5 min. Turn the VGA-76 off and disconnect it from the Perkin-Elmer 5000. Remove the absorption cell. Soak the absorption cell and gas/liquid separator in 1% HNO_3 overnight. Rinse in Type II water and dry.

8.4.5. Refer to the VGA-76 operation manual for specific details (Source Material 9.5).

8.5. Analyze all Toxicity Characteristic Leaching Procedure (TCLP) extracts, all samples analyzed as part of a delisting petition, and all samples that suffer from matrix interferences by the method of standard additions (see Procedure WI100, Section 4.6).

CONTROLLED

8.6. Analyses must include 10% duplicates, 10% spiked samples, and 10% quality control samples.

8.7. Calculate metal concentrations (1) by the method of standard additions, (2) from a calibration curve, or (3) directly from the instrument's concentration read-out. All dilution or concentration factors must be used. Concentrations reported for multiphased or wet samples must be appropriately qualified (e.g., 5 μg/g dry weight). Correction for moisture may be calculated using the following equation or from the LOTUS™ program called "HGCALC."

$$C = \frac{C_s \times V}{W \times S} ,$$

where C = concentration of Hg in dried sample (μg/kg),
C_s = concentration of solution (ng/mL),
V = diluted volume (mL),
W = weight of digested sample (g), and
S = percent solids/100.

9. Source Materials

9.1. American Public Health Association, American Waterworks Association, and Water Pollution Control Federation, *Standard Methods for the Examination of Water and Wastewater*, 16th ed., Method 320A (American Public Health Association, Washington, DC, 1980).

9.2. Environmental Monitoring and Support Laboratory, *Methods for Chemical Analysis of Water and Waste*, Method 245.1 (Office of Research and Development, US Environmental Protection Agency, Cincinnati, Ohio, 1983).

9.3. Perkin-Elmer, *Analytical Methods for Atomic Absorption Spectrophotometry* (Perkin-Elmer, Norwalk, Connecticut, 1982).

9.4. "Automated Cold Vapor Determination of Mercury: EPA Stannous Chloride Methodology," Report Number AA-51, Varian Instrument Group, AA Resource Center, Park Ridge, Illinois (1976).

9.5. *Vapor Generator Assembly Operation Manual* (Varian Instrument Group, AA Resource Center, Park Ridge, Illinois, 1976).

9.6. A. Gaskill, "Compilation and Evaluation of RCRA Method Performance Data," Work Assignment No. 2, EPA Contract No. 68-01-7075 (September 1986).

CONTROLLED

HSE-9 ANALYTICAL PROCEDURE APPROVAL

Method: Mercury in Solid or Semisolid Waste – CVAA (EPA Method 7471)

Method No.: WI110 **Revision No.:** 0

Section Leader Michael G. Bell **Date:** 11-14-90

Group Leader [illegible] **Date:** 11/15/90

QA Concurrence Margaret A. Gautier **Date:** 11-13-90

CONTROLLED

EP TOXICITY EXTRACTION

Analyte: Trace metals	**Method No.:** WI620
Matrix: Sludges, solids, and RCRA wastes	
Procedure: Acetic acid extraction	
Effective Date: 03/01/85 to 01/02/92	**Author:** Mary Carol Williams

SAFETY NOTE: Before beginning this procedure, read all of the Material Safety Data Sheets for the chemicals listed in Sec. 6. Read Sec. 4.3 of the EM-9 Safety Manual for information on personal protective clothing and equipment.

1. Principle of Method

1.1. Liquid samples are pH adjusted and filtered and eight primary pollutants are determined in the filtrate by atomic absorption spectrophotometry (AAS), (Method WI100), inductively coupled plasma emission spectrometry (ICPAES), (Method EI370), or inductively coupled plasma mass spectrometry ICPMS (Method EI36).

1.2. Solid samples are extracted with water and are adjusted to pH 5.0 ± 0.2 with acetic acid to simulate environmental leaching. The solution is filtered and primary pollutants are determined in the filtrate by AAS, ICPAES, or ICPMS.

1.3. The method of standard addition is used for all metal analyses. The concentration of contaminants at the maximum concern level (MCL) for characteristic of EP toxicity are:

Contaminant	Maximum concentration (mg/L)
Arsenic	5.0
Barium	100.0
Cadmium	1.0
Chromium	5.0
Lead	5.0
Mercury	0.2

Contaminant	Maximum concentration (mg/L)
Selenium	1.0
Silver	5.0

2. Accuracy and Precision

2.1. A well characterized matrix is not available to measure either accuracy or precision. Spike recovery is variable depending on the absorptive character of the matrix.

3. Interferences

3.1. Chloride interferes causing low recoveries for Cr, As, Se, and Ag.

3.2. These extremely complex samples may have a multitude of unidentified, continuously variable interferences.

4. Handling and Storage of Samples

4.1. Preservatives must NOT be added to samples.

4.2. Handle sludges from TA-50 or TA-257 in a glove box. Handler must wear an anti-C lab coat, safety glasses, and rubber gloves. Weighing and dissolution must be completed in the glove box.

4.3. Separation procedure. Filter a waste containing unbound liquid. If the solid phase is less than 0.5% of the waste, discard the solid phase and analyze the filtrate for trace elements, pesticides, and herbicides. If the waste contains more than 0.5% solids, extract the solid phase and store the liquid phase for later use.

4.4. Structural integrity procedure/particle size reduction. Before extraction, the solid material must pass through a 9.5-mm (0.375-in.) standard sieve, have a surface area of 3.1 cm^2 per gram of waste, or, if it consists of a single piece, be subjected to the structural integrity procedure (Step 7.10). Use the structural integrity procedure to demonstrate the ability of the waste to remain intact after disposal. If the waste does not meet one of these conditions it must be ground to pass the 9.5-mm sieve.

4.5. Extraction of solid material. Extract the solid material from Step 4.4. for 24 h in an aqueous medium whose pH is maintained at or below ±0.2 using 0.5 N acetic acid. Maintain the pH either automatically or manually. (In acidifying to pH 5, no more than 4.0 mL of acid solution per g of material being extracted may be used.)

4.6. Final separation of the extraction from the remaining solid. After extraction, adjust the liquid:solid ratio to 20:1 and separate the mixed solid and extraction liquid by filtration. Discard the solid and combine the liquid with any filtrate obtained in Step 4.2. This is the EP extract that is analyzed and compared to the threshold listed in Table 1 of 40 CFR 261.24.

5. Apparatus

5.1. Glove box with balance for use with radioactive samples.

5.2. Beaker or bottle: 2000-mL, polyethylene.

5.3. Stirring bar: 1.5- by 3/8-in. magnetic, Teflon coated.

5.4. Heavy duty magnetic stirrer.

5.5. Filtering flask, 1000-mL.

5.6. Vacuum filters, Nalgene 44-0045 or Millipore XX10 047 00.

5.7. Millipore filters: AP25 042 00, AP20 042 00, AP15 042 00, and HAWP 047 00 for aqueous solutions, and AP25 042 00 and FHUP 047 00 for organic solutions.

5.8. Polyethylene bottle: 250-mL.

5.9. Hot plate.

5.10. pH controller: type 45-A, Chemtrix, Inc., Hillsboro, OR 97123 or equivalent.

6. Reagents

6.1. Distilled water.

6.2. Acetic acid (0.5 N): Dilute 30 mL of concentrated acetic acid to 1 L with distilled water.

7. Procedure

7.1. If the waste does not contain any free liquid, go to Step 7.9. If the sample is liquid or multiphase, continue as follows. Weigh filter membrane and prefilter to ±0.01 g. Handle membrane and prefilters with blunt curved-tip forceps or vacuum tweezers, or by applying suction with a pipette.

7.2. Assemble the filter holder, membranes, and prefilters following the manufacturer's instructions. Place the 0.45-μm membrane on the support screen and add prefilters in ascending order of pore size. Do not prewet the filter membrane.

7.3. Weigh out a representative subsample of the waste (100 g minimum).

7.4. Allow slurries to stand to permit the solid phase to settle. Wastes that settle slowly may be centrifuged before filtration.

7.5. Wet the filter with a small portion of the liquid phase of the waste or extraction mixture. Transfer the remaining material to the filter holder and apply vacuum or gentle pressure (10-15 psi) until all liquid passes through the filter. Stop filtration when air or pressurizing gas moves through the membrane. If this point is not reached under vacuum or gentle pressure, slowly increase the pressure in 10-psi increments to 75 psi. Halt filtration when liquid flow stops. This liquid will constitute part or all of the extract (refer to Step 7.16). Refrigerate the liquid until time of analysis.

NOTE: Oil samples or samples that contain oil are treated in exactly the same way as any other sample. Filter the liquid portion of the sample and treat as part of the EP extract. If the liquid portion of the sample will not filter (this is usually the case with heavy oils or greases) carry it through the EP extraction as a solid.

7.6. Remove the solid phase and filter media and, while not allowing it to dry, weigh to ±0.01 g. Determine the wet weight of the residue by calculating the weight difference between the weight of the filters (Step 7.1) and the weight of the solid phase and the filter media.

7.7. The waste will be handled differently from this point depending on whether it contains more or less than 0.5% solids. If the sample appears to have less than 0.5% solids, determine the percent solids by the following procedure.

7.7.1. Dry the filter and residue at 80°C until two successive weighings yield the same value.

7.7.2. Calculate the percent solids using the following equation:

$$\frac{W_{sf} - W_f}{W_i} \times 100 = \%\ \text{solid}$$

where W_{sf} = weight of filtered solid and filters,
W_f = tared weight of filters, and
W_i = initial weight of waste material.

NOTE: This procedure is used only to determine whether the solid must be extracted or whether it can be discarded unextracted. It is not used in calculating the amount of water or acid to use in the extraction step. Do not extract solid material that has been dried at 80°C. A new sample

will have to be used for extraction if a percent solids determination is performed.

7.8. If the solid comprises less than 0.5% of the waste, discard the solid and proceed immediately to Step 7.17, treating the liquid phase as the extract.

7.9. Evaluate the solid material obtained from Step 7.5 and all materials that do not contain free liquids for particle size.

7.9.1. If the solid material has a surface area equal to or greater than 3.1 cm^2 per gram of material or passes through a 9.5-mm (0.375-in.) standard sieve, proceed to Step 7.11.

7.9.2. If the surface area is smaller or the particle size larger than specified above, prepare the solid material for extraction by crushing, cutting, or grinding the material so that it passes through a 9.5-mm (0.375-in.) sieve or, if the material is in a single piece, by subjecting the material to the structural integrity procedure described in Step 7.10.

7.10. Structural integrity procedure (SIP).

7.10.1. Cut a 3.3-cm-diam by 7.1-cm-long cylinder from the waste material. For wastes that have been treated using a fixation process, the waste may be cast in the form of a cylinder and allowed to cure for 30 d before testing.

7.10.2. Place waste in the sample holder and assemble the tester. Raise the hammer to its maximum height and drop. Repeat 14 additional times.

7.10.3. Remove solid material from tester and scrape off any particles adhering to sample holder. Weigh the waste to the nearest 0.01 g and transfer it to the extractor.

7.11. If the sample contains more than 0.5% solids, use the wet weight of the solid phase obtained in Step 7.6 for purposes of calculating the amount of liquid and acid to employ for extraction by using the following equation:

$$W = W_d - W_f$$

where W = wet weight of solid to be charged to extractor (g),
W_{sf} = wet weight of filtered solids and filter media (g), and
W_f = weight of tared filters (g).

If the waste does not contain any free liquids, 100 g of the material will be subjected to the extraction procedure.

7.12. Place the appropriate amount of material but not less than 100 g (refer to Step 7.11) into the extractor and add 16 times its weight of deionized water.

7.13. After the solid material and deionized water are placed in the extractor, begin agitation and measure the pH of the solution in the extractor. If the pH is >5.0, decrease the pH of the solution to 5.0 ± 0.2 by adding 0.5 N acetic acid. If the pH is equal to or <5.0, do not add acetic acid. The pH of the solution should be monitored, as described below, during the course of the extraction and, if the pH rises above 5.2, add 0.5 N acetic acid to bring the pH down to 5.0 ± 0.2. However, in no event shall the aggregate amount of acid added to the solution exceed 4 mL of acid per gram of solid. Agitate the mixture for 24 h and maintain at 20-40°C (68-104°F) during this time. Monitor and adjust the pH during the course of the extraction with a device such as the Chemtrix Type 45-A pH Controller in conjunction with a metering pump and reservoir of 0.5 N acetic acid. If such a system is not available, use the following manual procedure.

7.13.1. Calibrate a pH meter in accordance with the manufacturer's specifications.

7.13.2. Check the pH of the solution and, if necessary, manually add 0.5 N acetic acid to the extractor until the pH reaches 5.0 ± 0.2. Adjust the pH of the solution at 15-, 30-, and 60-min intervals, moving to the next longer interval if the pH does not have to be adjusted more than 0.5 pH units. The amount of acid should never exceed 4 mL per gram of solid.

7.13.3. Continue the adjustment procedure for at least 6 h.

7.13.4. If, at the end of the 24-h extraction period, the pH of the solution is not below 5.2 and the maximum amount of acid (4 mL per gram of solids) has not been added, adjust the pH to 5.0 ± 0.2 and continue the extraction for an additional 4 h, adjusting the pH at 1-h intervals.

7.14. At the end of the extraction period, add deionized water to the extractor in an amount determined by the following equation:

$$V = (20)(W) - 16(W) - A$$

CONTROLLED

where V = deionized water to be added (mL),
W = weight of solid charged to extractor (g), and
A = amount of 0.5 N acetic acid added during extraction (mL).

7.15. Separate the material in the extractor into its component liquid and solid phases in the following manner.

7.15.1. Allow slurries to stand to permit the solid phase to settle and set up the filter apparatus. Wastes that are slow to settle may be centrifuged before filtration.

7.15.2. Using standard radiochemical safety procedures, wet the filter with a small portion of the liquid phase from the waste or extraction mixture. Transfer the remaining material to the filter holder and apply vacuum or gentle pressure (10-15 psi) until all liquid passes through the filter. Stop filtration when air or pressurizing gas moves through the membrane. If this point is not reached under vacuum or gentle pressure, slowly increase the pressure in 10-psi increments to 75 psi. Halt filtration when liquid flow stops.

7.16. The liquids resulting from Steps 7.5 and 7.15 should be combined. The combined liquid (or the waste itself if it has less than 0.5% solids, as noted in Step 7.8) is the extract and should be analyzed for the presence of any of the contaminants specified in the table in Step 1.3 by AAS, ICPAES, or ICPMS. Refrigerate the sample until it is to be digested with acid. The mercury aliquot should be digested immediately and other metals as soon as possible.

8. Calculations

8.1. If the EP extract includes two phases, concentration of contaminants is determined by using a simple weighted average. For example: An EP extract contains 50 mL of oil and 1000 mL of an aqueous phase. Contaminant concentrations are determined for each phase. The final contamination concentration is taken to be:

$$C_f = \frac{V_o \times C_o}{V_o + V_a} + \frac{V_a \times C_a}{V_o + V_a}$$

where C_f = final contamination concentration (mg/L),
V_o = volume of oil (50 mL),
C_o = contaminant concentration in oil (mg),
V_a = volume of aqueous phase (mL), and
C_a = contaminant concentration of aqueous phase (mg).

Chromium concentrations have to be interpreted differently. A waste containing chromium will be determined to be EP toxic if: (1) the waste extract has an initial pH of less than 7 and contains more than 5 mg/L of hexavalent chromium in the resulting extract, or (2) the waste extract has an initial pH greater than 7 and a final pH greater than 7 and contains more than 5 mg/L of hexavalent chromium in the extract, or (3) the waste extract has an initial pH greater than 7 and a final pH less than 7 and contains more than 5 mg/L of total chromium, unless the chromium is trivalent. To determine whether the chromium is trivalent, the sample must be processed according to an alkaline digestion method (Method 3060) and analyzed for hexavalent chromium (Methods 7195, 7196, or 7197). Refer to the SW-846 manual.

8.2. Calculation for standard additions:

$$C = \frac{D \times R \times C_s}{R_s - R}$$

where C = concentration of unknown,
D = dilution of both standard and unknown (must be the same for each),
R = reading of unknown,
C_s = concentration of standard added, and
R_s = reading of unknown plus standard.

9. Source Material

9.1. U.S. Environmental Protection Agency, "Test Methods for Evaluating Solid Waste," SW-846, Office of Solid Waste and Emergency Response, Washington, DC (1982).

CONTROLLED

INORGANIC TOXICITY CHARACTERISTIC LEACHING PROCEDURE (TCLP)

Analyte: Trace metals	**Method No.:** WI650
Matrix: Sludges, soils, and RCRA wastes	
Procedure: Acid leach to extract metals	
Effective Date: 04/01/87	**Authors:** Mary Carol Williams Daniel J. Gerth

SAFETY NOTE: Before beginning this procedure, read all of the material safety data sheets for the chemicals listed in Sec. 6. Read Sec. 4.3 of the Environmental Chemistry Safety Manual for information on personal protective clothing and equipment. Read Sec. 10 of this procedure and Source Materials 11.3 and 11.4 for proper waste disposal practices.

1. Principle of Method

1.1. The toxicity characteristic leaching procedure (TCLP) is designed to determine the mobility of contaminants present in liquid, solid, and multiphasic wastes.

1.2. For liquid wastes (i.e., those containing <0.5% solid material), the waste, after filtration through a 0.6- to 0.8-μm glass-fiber filter, is defined as the TCLP extract.

1.3. For solid wastes or wastes containing significant amounts of solid material, the particle size of the waste is reduced (if necessary), and the liquid phase, if any, is separated from the solid phase and stored at 4°C for later analysis. The solid phase is extracted with 20 times its weight of extraction fluid. The choice of extraction fluid employed depends on the alkalinity of the solid phase of the waste. Following extraction, the liquid extract is separated from the solid phase by filtration through a 0.6- to 0.8-μm glass-fiber filter.

1.4. If a total analysis of the waste demonstrates that individual contaminants are not present or that they are present at such low concentrations that the appropriate regulatory thresholds could not possibly be exceeded, the TCLP need not be run.

1.5. If compatible (i.e., multiple phases will not form on combination), the initial liquid phase of the waste and the liquid extract are combined and analyzed. If incompatible, the liquids are analyzed separately, and the results are mathematically combined to yield a volume-weighted average concentration.

1.6. The maximum concentrations of contaminants for characteristics of toxicity are as follows:

EPA Hazardous Waste Number	Contaminant	Maximum Concentration (mg/L)
D004	Arsenic	5.0
D005	Barium	100.0
D006	Cadmium	1.0
D007	Chromium	5.0
D008	Lead	5.0
D009	Mercury	0.2
D010	Selenium	1.0
D011	Silver	5.0

2. Accuracy and Precision

2.1. A well-characterized matrix is not available to measure either accuracy or precision. Spike recovery is variable depending on the absorptive characteristics of the matrix.

3. Interferences

3.1. Chloride interferes, causing low recoveries for Cr, As, Se, and Ag.

3.2. Samples can be extremely complex and can have a multitude of unidentified, continuously variable interferences.

4. Handling and Storage of Samples

4.1. Preservatives must NOT be added to samples.

4.2. Sludges from TA-50 or TA-57 must be handled in a glove box. The handler must wear an anti-C lab coat, safety glasses, and rubber gloves. Weighing and dissolution must be completed in a glove box.

4.3. TCLP extracts should be preserved with nitric acid at a pH <2, prepared for analysis, and analyzed as soon as possible following extraction.

5. Apparatus

5.1. Glove box: with balance, for use with radioactive samples, if necessary.

5.2. Extraction vessel: 2-L bottle, borosilicate glass or plastic.

CONTROLLED

5.3. Magnetic stirring bar: Teflon-coated.

5.4. Magnetic stirrer: heavy duty.

5.5. Agitation apparatus: capable of rotating the extraction vessel end over end at 30 ± 2 rpm, from Associated Design and Manufacturing Company, Alexandria, Virginia, or equivalent to meet Environmental Protection Agency (EPA) requirements as described in "Test Methods for Evaluating Solid Wastes" (40 CFR 261).

5.6. Pressure filter holder: Fisher Model 09-753-25K or equivalent to meet EPA requirements as described in "Test Methods for Evaluating Solid Wastes" (40 CFR 261).

5.7. Filter media: 0.7-μm, Whatman GFF, Whatman Laboratory Products, Clifton, New Jersey, or equivalent to meet EPA requirements as described in "Test Methods for Evaluating Solid Wastes" (40 CFR 261).

5.8. Polyethylene bottle: 250-mL.

5.9. pH meter: calibrated in accordance with manufacturer's specifications.

5.10. Hot plate.

5.11. Laboratory balance: any balance accurate to ±0.01 g.

6. Reagents

6.1. ASTM Type I water.

6.2. Hydrochloric acid, 1.0 N: prepare from American Chemical Society (ACS) reagent-grade (87 mL/L).

6.3. Nitric acid, 1.0 N: prepare from ACS reagent-grade (60 mL/L).

6.4. Sodium hydroxide, 10 N.

6.5. Acetic acid: glacial, ACS reagent-grade.

6.6. Extraction fluid no. 1: prepare by adding 11.4 mL of glacial acetic acid to 1975 mL of ASTM Type I water. Add 12.9 mL of 10 N NaOH. When correctly prepared, the pH of this fluid is 4.93 ± 0.05.

6.7. Extraction fluid number 2: prepare by adding 11.4 mL of glacial acetic acid to 1989 mL of ASTM Type I water. When correctly prepared, the pH of this fluid is 2.88 ± 0.05.

NOTE: These extraction fluids should be monitored frequently for impurities. The pH should be checked before use to ensure that these fluids were accurately prepared.

6.8. Metal standards, 1000 mg/L stock solutions. See individual metal procedures.

6.9. Nitric acid: concentrated, reagent-grade.

6.10. Nitric acid, 1%: dilute 10 mL of concentrated nitric acid to 1000 mL with ASTM Type I water.

6.11. Spike solution: use 1000 mg/L metal standards in the nitrate or oxide form. Add 10 mL of Ag; 5 mL each of As, Cr, Pb, and Se; 1 mL of Cd; and 100 mL of Ba. Add standard solutions to approximately 100 mL 1% HNO_3. Dilute to 1000 mL with 1% HNO_3. Do not use HCl solutions, which will precipitate silver.

Element	Spike solution concentration (mg/L)	Spiked sample concentration (mg/L)
As	5	0.1
Cd	1	0.02
Cr	5	0.1
Pb	5	0.1
Se	5	0.1
Ag	5	0.1
Ba	100	10.0

7. Procedure

7.1. The preliminary TCLP evaluations are performed on representative samples of waste (minimum aliquot size of 100 g) that will not actually undergo TCLP extraction. These evaluations include preliminary determination of the percent solids of the waste; determination of whether the waste contains insignificant solids and is therefore its own extract after filtration; determination of whether the solid portion of the waste requires particle-size reduction; and determination of which extraction fluid is to be used.

7.2. Preliminary determination of percent solids. Percent solids is defined as that fraction of a waste sample (as a percentage of the total sample) from which no liquid can be forced by applied pressure, as described below.

7.2.1. If the waste will obviously yield no free liquid when subjected to pressure filtration (i.e., is 100% solids), proceed to Step 7.5.

7.2.2. If the sample is liquid or multiphasic, liquid/solid separation to make a preliminary determination of percent solids is required. This separation involves the filtration device described in Steps 5.6-5.7 and is outlined in Steps 7.2.3-7.2.9.

7.2.3. Weigh the filter and the container that will receive the filtrate.

7.2.4. Assemble the filter holder and filter following the manufacturer's instructions. Place the filter on the support screen and secure.

7.2.5. Weigh out a representative subsample of the waste (100-g minimum) and record the weight.

7.2.6. Allow slurries to stand to permit the solid phase to settle. Wastes that settle slowly may be centrifuged before filtration. Centrifugation is to be used only as an aid to filtration. If centrifugation is used, the liquid should be decanted and filtered and the solid portion of the waste filtered through the same filtration system.

7.2.7. Quantitatively transfer the waste sample to the filter holder (liquid and solid phases). If filtration of the waste at 4°C reduces the amount of expressed liquid below what would be expressed at room temperature, allow the sample to warm up to room temperature in the device before filtering.

NOTE: If waste material (>1% of original sample weight) has obviously adhered to the container used to transfer the sample to the filtration apparatus, determine the weight of this residue and subtract it from the sample weight determined in Step 7.2.5 to determine the weight of the waste sample that will be filtered.

Gradually apply gentle pressure (1-10 psi) until pressurizing gas moves through the filter. If this point is not reached under 10 psi and if no additional liquid has passed through the filter in any 2-min interval, slowly increase the pressure in 10-psi increments to a maximum of 50 psi. After each incremental increase of 10-psi, if the pressurizing gas has not moved through the filter and if no additional liquid has passed through the filter in any 2-min interval, proceed to the next 10-psi increment. When the pressurizing gas begins to move through the filter or when liquid flow has ceased at 50 psi (i.e., filtration does not produce any additional filtrate within any 2-min period), filtration is stopped.

NOTE: Instantaneous application of high pressure can degrade the glass-fiber filter and may cause premature plugging.

7.2.8. The material in the filter holder is defined as the solid phase of the waste, and the filtrate is defined as the liquid phase.

NOTE: Some wastes, such as oily wastes and some paint wastes, will obviously contain some material that appears to be a liquid. But even after applying pressure filtration, as outlined in Step 7.2.7, this material may not filter. If this is the case, the material in the filtration device is defined as a solid. The original filter is **NOT** to be replaced with a fresh filter under any circumstances. Only one filter is to be used.

7.2.9. Determine the weight of the liquid phase by subtracting the weight of the filtrate container (see Step 7.2.3) from the total weight of the filtrate-filled container. The weight of the solid phase of the waste sample is determined by subtracting the weight of the liquid phase from the weight of the total waste sample, as determined in Step 7.2.5.

7.2.10. Record the weight of the liquid and solid phases. Calculate the percent solids as follows:

$$\%S = \frac{W_S \times 100}{W_T} ,$$

where %S = percent solids,
W_S = weight of solid, and
W_T = total weight of waste.

7.3. Determination of whether waste is liquid or has insignificant amounts of solid material. If the sample obviously has a significant amount of solid material, the solid phase must be extracted. Proceed to Step 7.4 to determine if the waste requires particle-size reduction, and reduce particle size if necessary. Determine whether the waste is liquid or has insignificant amounts of solid material, which need not undergo extraction, as follows:

7.3.1. Remove the solid phase and filter from the filtration apparatus.

7.3.2. Dry the filter and solid phase at 100 ± 20°C until two successive weighings yield the same value within ±1%. Record the final weight.

NOTE: Caution should be taken to ensure that the solid will not flash upon heating. The drying oven should be vented to a hood or appropriate device.

7.3.3. Calculate the percent dry solids as follows:

CONTROLLED

$$\%D_s = \frac{(W_{wf} - W_f) \times 100}{W_i} .$$

where: $\%D_s$ = percent dry solids,
W_{wf} = weight of dry waste and filter,
W_f = tared weight of filter, and
W_i = initial weight of sample.

7.3.4. If the percent dry solids is <0.5%, the waste after filtration is defined as the TCLP extract. If the percent dry solids is ≥0.5% and TCLP is to be performed, return to the beginning of this section (Step 7.1) with a new representative waste sample, so that it can be determined if particle-size reduction is necessary (Step 7.4) and so that the appropriate extraction fluid may be determined (Step 7.5) on a fresh portion of the solid phase of the waste.

7.4. Determination of whether the wastes require particle-size reduction (particle size is reduced during this step). Using the solid portion of the waste, evaluate the solid for particle size. If the solid has a surface area per gram ≥3.1 cm^2 or is <1 cm in its smallest dimension (i.e., is capable of passing through a 9.5-mm [0.375-in.] standard sieve), particle-size reduction is not required (proceed to Step 7.5). If the surface area is smaller or the particle size larger than described above, the solid portion of the waste is prepared for extraction by crushing, cutting, or grinding the waste to a surface area or particle size as described above.

7.5. Determination of appropriate extraction fluid. If the solid content is ≥0.5% of the waste and if TCLP extraction is to be done (Section 8), determine the appropriate fluid (Steps 6.6-6.7) to use as follows.

7.5.1. Weigh out a small subsample of the solid phase of the waste, reduce the particle size (if necessary) to approximately 1-cm-diam or less, and transfer 5.0 g of the solid phase of the waste to a 250-mL (or larger) beaker or Erlenmeyer flask.

7.5.2. Add 96.5 mL of reagent water (ASTM Type I) to the beaker, cover with a watch glass, and stir vigorously for 5 min with a magnetic stirrer. Measure and record the pH. If the pH is <5.0, extraction fluid No. 2 is used. Proceed to Section 8.

7.5.3. If the pH from Step 7.5.2 is >5.0, add 3.5 mL 1.0 N HCl, slurry briefly, cover with a watch glass, heat to 50°C, and hold at 50°C for 10 min.

7.5.4. Let the solution cool to room temperature and record the pH. If the pH is <5.0, use extraction fluid No. 1. If the pH is >5.0, use extraction fluid No. 2. Proceed to Section 8.

7.6. The sample of waste used in this step must **NOT** be used any further. Use a new sample of the waste for extractions in Steps 8 and 9.

8. Extraction Procedure

8.1. Although a sample of at least 100 g (solid and liquid phases) is required, a larger sample may be more appropriate, depending on the solids content of the waste sample (percent solids, see Step 7.2) and whether the initial liquid phase of the waste will be miscible with the aqueous extract of the solid. Enough solids should be generated for extraction so that the volume of TCLP extract will be sufficient to support all the determinations required. If the amount of extract generated by a single TCLP extraction will not be sufficient to perform all the determinations required, it is recommended that more than one extraction be performed and that the extracts from each extraction be combined and then aliquoted for analysis.

8.2. If the waste will obviously yield no liquid when subjected to pressure filtration (i.e., is 100% solid, see Step 7.2), weigh out a representative subsample of the waste (100-g minimum) and proceed to Step 8.10.

8.3. If the sample is liquid or multiphasic, liquid/solid separation is required. This separation involves filtration and is outlined in Steps 8.4 to 8.9 below.

8.4. Weigh the container that will receive the filtrate.

8.5. Assemble the filter holder and filter following the manufacturer's instructions. Place the filter on the support screen and secure it. Acid-wash the filter.

8.6. Weigh out a representative subsample of the waste (100-g minimum) and record the weight. If the waste was shown to contain <0.5% dry solids (Step 7.3), the waste, after filtration, is defined as the TCLP extract. Therefore, enough of the sample should be filtered so that the amount of filtered liquid will support all the determinations required of the TCLP extract. For wastes containing >0.5% dry solids (Steps 7.2 or 7.3), use the percent solids information obtained in Step 7.2 to determine the optimum sample size (100-g minimum) for filtration. Enough solids should be generated after filtration to support the determinations to be performed on the TCLP extract.

8.7. Allow slurries to stand to permit the solid phase to settle. Wastes that settle slowly may be centrifuged before filtration. Centrifugation is to be used only as an aid to filtration. If centrifugation is used, the liquid should be decanted and filtered and the solid portion of the waste filtered through the same filtration system.

8.8. Quantitatively transfer the waste sample (liquid and solid phases) to the filter holder. If filtration of the waste at 4°C reduces the amount of expressed liquid below what would be expressed at room temperature, allow the sample to warm up to room temperature in the device before filtering.

NOTE: If waste material (>1% of the original sample weight) has obviously adhered to the container used to transfer the sample to the filtration apparatus, determine the weight of this residue and subtract it from the sample weight determined in Step 8.6, to determine the weight of the waste sample that will be filtered.

Gradually apply gentle pressure (1-10 psi) until pressurizing gas moves through the filter. If this point is not reached below 10 psi and if no additional liquid has passed through the filter in any 2-min interval, slowly increase the pressure in 10-psi increments to a maximum of 50 psi. After each incremental increase, if the pressurizing gas has not moved through the filter and if no additional liquid has passed through the filter in any 2-min interval, proceed to the next 10-psi increment. When the pressurizing gas begins to move through the filter or when the liquid flow has ceased at 50 psi (i.e., filtration does not produce any additional filtrate within a 2-min period), filtration is stopped.

NOTE: Instantaneous application of high pressure can degrade the glass-fiber filter and may cause premature plugging.

8.9. The material in the filter holder is defined as the solid phase of the waste, and the filtrate is defined as the liquid phase. Weigh the filtrate. The liquid phase may now be either analyzed (see Step 8.14) or stored at 4°C until time of analysis.

NOTE: Some wastes, such as oily wastes and some paint wastes, will obviously contain some material that appears to be a liquid. But even after applying vacuum or pressure filtration, as outlined in Step 8.8, this material may not filter. If this is the case, the material in the filtration device is defined as a solid and is carried through the extraction as a solid. The original filter is not to be replaced with a fresh filter under any circumstances. Only one filter is to be used.

8.10. If the waste contains <0.5% dry solids (see Step 7.3), proceed to Step 8.14. If the waste contains >0.5% dry solids (see Step 7.2 or 7.3) and if particle-size reduction of the solid was needed in Step 7.4, proceed to Step 8.11. If particle-size reduction was not required in Step 7.4, quantitatively transfer the solid material into the extractor vessel, including the filter used to separate the initial liquid from the solid phase, and proceed to Step 8.12.

8.11. The solid portion of the waste is prepared for extraction by crushing, cutting, or grinding the waste to a surface area or particle size as described in Step 7.4. When the surface area or particle size has been appropriately altered,

quantitatively transfer the solid material into the extractor vessel, including the filter used to separate the initial liquid from the solid phase.

NOTE: The waste should be sieved only through a Teflon-coated sieve, to avoid possible contamination of the sample. Surface area requirements are meant for filamentous (e.g., paper or cloth) and similar waste materials. Actual measurement of surface area is not recommended.

8.12. Determine the amount of extraction fluid to add to the extractor vessel as follows:

Weight of extraction fluid = 0.5 × % solids × weight of waste filtered.

Slowly add this amount of appropriate extraction fluid (see Step 7.5) to the extractor vessel. Close the extractor bottle tightly (Teflon tape can be used to ensure a tight seal), secure it in the rotary extractor device, and rotate it at 30 ± 2 rpm for 18 ± 2 h. Ambient temperature (i.e., temperature of room in which extraction is to take place) must be maintained at 22 ± 3°C during the extraction period.

NOTE: As agitation continues, pressure may build up within the extractor bottle for some types of wastes (e.g., lime or calcium carbonate containing waste may evolve gases such as carbon dioxide). To relieve excess pressure, the extractor bottle may be opened periodically (e.g., after 15 min, 30 min, and 1 h) and vented into a hood.

8.13. Following the extraction, the material in the extractor vessel is separated into its component liquid and solid phases by filtering through a new glass-fiber filter, as outlined in Step 8.8. For final filtration of the TCLP extract, the filter may be changed, if necessary, to facilitate filtration. Filter(s) must be acid-washed if the mobility of metals is being evaluated.

8.14. The TCLP extract is prepared as follows:

8.14.1. If the waste contained no initial liquid phase, the filtered liquid material obtained from Step 8.13 is defined as the TCLP extract. Proceed to Step 8.15.

8.14.2. If compatible (i.e., multiple phases will not result on combination), the filtered liquid resulting from Step 8.13 is combined with the initial liquid phase of the waste obtained in Step 8.8. This combined liquid is defined as the TCLP extract. Proceed to Step 8.15.

8.14.3. If the initial liquid phase of the waste obtained from Step 8.8 is not or may not be compatible with the filtered liquid resulting from Step 8.13, these liquids are not combined. These liquids, collectively defined as the

TCLP extract, are analyzed separately and the results are combined mathematically. Proceed to Step 8.15.

8.15. Following collection of the TCLP extract, record the pH of the extract. The extract should be immediately aliquoted for analysis and properly preserved (metals aliquots must be acidified with concentrated nitric acid to pH <2). The TCLP extract must be prepared and analyzed according to appropriate analytical methods. TCLP extracts to be analyzed for metals other than mercury must be acid digested.

8.16. The contaminant concentrations in the TCLP extract are compared with the thresholds identified in the appropriate regulations. Refer to Source Material 11.1 for quality assurance requirements.

9. Calculations

9.1. If the individual phases are to be analyzed separately, determine the volume of the individual phases (to ±0.5%), conduct the appropriate analyses, and combine the results mathematically by using a simple volume-weighted average:

$$\text{Final analyte concentration} = \frac{(V_1 \times C_1) + (V_2 \times C_2)}{V_1 + V_2},$$

where V_1 = the volume of the first phase (L),
C_1 = the concentration of the contaminant of concern in the first phase (mg/L),
V_2 = the volume of the second phase (L), and
C_2 = the concentration of the contaminant of concern in the second phase (mg/L).

Chromium concentrations must be interpreted differently. A waste containing chromium will be determined to be toxic if (1) the waste extract has an initial pH of <7 and contains more than 5 mg/L of hexavalent chromium in the resulting extract, or (2) the waste extract has an initial pH >7 and a final pH >7 and contains more than 5 mg/L of hexavalent chromium in the extract, or (3) the waste extract has an initial pH >7 and a final pH <7 and contains more than 5 mg/L of total chromium, unless the chromium is trivalent. To determine whether the chromium is trivalent, the sample must be processed according to an alkaline digestion method (Method 3060) and analyzed for hexavalent chromium (Methods 7195, 7196, or 7197). (Refer to SW-846 Manual, Source Material 11.1.)

9.2. Calculation for standard additions:

$$C = \frac{D \times R_u \times C_s}{R_u - R_s} ,$$

where C = concentration of unknown,
D = dilution of both standard and unknown (must be the same for each),
R_u = instrument reading of unknown,
C_s = concentration of standard added, and
R_s = instrument reading of unknown plus standard.

10. Proper Waste Disposal Practices

10.1. Soil-water slurry.

10.1.1. The TCLP waste consists of approximately 1500 mL of a slurry that remains after filtering the sample for TCLP analysis.

10.1.2. If, after analysis, the sample is found to be below the levels of concern for the TCLP analytes, dispose of the liquid portion of the sample in a sink approved for the disposal of inorganic acids and bases. Dispose of the solid portion of the sample as ordinary laboratory trash.

10.1.2.1. Concern levels:

Cd, Se,	>	1 ppm
Ag, As, Cr, Pb	>	5 ppm
Ba	>	100 ppm

10.1.3. If, after analysis, the sample is found to be above the level of concern for any of the TCLP analytes, accumulate the slurry in a coated glass bottle in a secondary containment tray.

10.1.3.1. Label the bottle with a hazardous waste label indicating its use for the TCLP waste samples.

10.1.3.2. When the bottle is full, keep it in the secondary containment tray pending pickup by Waste Management (CST-7).

10.2. Waste pickup.

10.2.1. When the waste bottle is full, request CST-7 to pick it up by using the current Chemical Waste Disposal Request (CWDR) form. The current Waste Profile Form describing the waste is referenced on the CWDR.

CONTROLLED

10.2.2. CST-7 picks up the waste for disposal in accordance with Laboratory policy.

11. Source Materials

11.1. *Test Methods for Evaluating Solid Waste, SW-846* (Office of Solid Waste and Emergency Response, Washington, D.C., 1982).

11.2. *Federal Register*, Vol. 51, No. 216, pp. 40643-40652.

11.3. "Low-Level Radioactive Solid Waste," Administrative Requirement 10-2, in *Environment, Safety, and Health Manual*, Los Alamos National Laboratory Manual, Chapter 1 (most recent edition).

11.4. "Hazardous and Mixed Waste," Administrative Requirement 10-3, in *Environment, Safety, and Health Manual*, Los Alamos National Laboratory Manual, Chapter 1 (most recent edition).

Revisions or additions to the procedure are marked (▒▒▒▒). Where a section heading is marked, the entire section has been revised.

CONTROLLED

ANALYTICAL PROCEDURE REVIEW AND APPROVAL

Method: Inorganic Toxicity Characteristic Leaching Procedure (TCLP)

Method No.: WI650 **Revision No.:** 2

Section Leader Daniel J. Gerth **Date:** 3/15/94

Group Leader [illegible] **Date:** 3/16/94

QA Concurrence Margaret A. Gautier **Date:** 3-16-94

CONTROLLED

PREPARATION OF AQUEOUS SAMPLES FOR SPECTROCHEMICAL ANALYSIS— GFAAS AND ICP-MS

Analyte: Total, suspended, and dissolved metals	**Method No.:** WI685 (EPA 200.0, 200.8 and SW846 3020)
Matrix: Water and wastewater	
Procedure: Open beaker digestion with HNO_3	
Effective Date: 08/01/93	**Authors:** Richard Robinson Richard Foust

SAFETY NOTE: Before beginning this procedure, read all of the Material Safety Data Sheets for the chemicals listed in Sec. 8. Read Sec. 4.3 of the EM-9 Safety Manual for information on personal protective clothing and equipment. Read Sec. 12 of this procedure for proper waste disposal practices.

1. Principle of Method

The sample is digested with nitric acid and evaporated to low volume. It is then cooled and brought to final volume with ASTM Type I water. The resulting solution is divided into two parts, one for GFAAS analysis and the other for ICP-MS analysis.

2. Applicability

2.1. This method is used for the preparation of samples for the determination of total, dissolved, and suspended metals in aqueous samples. It is based on EPA Methods 200.0 and 200.8 and SW 846 Method 3020, and is approved for NPDES samples.

2.2. Samples prepared by this method may be analyzed by GFAAS or ICP-MS, using the methods listed in Table I. The metals for which the method is applicable are listed in Table I.

3. Definitions

3.1. Laboratory control standard (LCS). An aliquot of laboratory reagent water to which known quantities of the method analytes are added in the laboratory.

3.2. Matrix spike. A matrix spike analysis is performed by adding a predetermined quantity of stock solutions of certain analytes to a sample matrix prior to sample digestion and analysis. The concentration of the spike should be at the regulatory standard level or the practical quantitation limit for the method. No

spike of the analyte is necessary when the concentration of the analyte in the sample is greater than 0.1%.

3.3. Laboratory process blank. An aliquot of reagent water that is treated exactly as a sample including exposure to all glassware, equipment, reagents, and acids that are used with other samples.

3.4. Quality control sample (QCS). A solution of target analytes of known concentration used to fortify an aliquot of LCS matrix. The QCS is obtained from a source outside to the laboratory and is used to check laboratory performance.

3.5. Sample duplicate. Duplicate samples are two separate samples taken from the same source (i.e., sample containers) and processed and analyzed independently.

3.6. Dissolved metal concentration. The concentration of metal in an aqueous sample that will pass through a 0.45-μm membrane filter assembly, before sample acidification.

3.7. Suspended metal concentration. The concentration of metal(s) in an aqueous sample that will not pass through a 0.45-μm membrane filter assembly, before sample acidification.

3.8. Total metal concentration. The concentration of metal(s) in an unfiltered aqueous sample, as determined after vigorous acid digestion, or the sum of the concentrations of dissolved and suspended metal(s).

4. Quality Control

4.1. Four laboratory control samples are processed and analyzed with each batch of 20 samples.

4.1.1. A laboratory process blank is carried throughout the entire digestion and analyzed with each batch of 20 samples.

4.1.2. A laboratory control standard is processed and analyzed with each batch of 20 samples.

4.1.3. A sample duplicate is processed and analyzed with each batch of 20 samples.

4.1.4. A matrix spike is processed and analyzed with each batch of 20 samples.

5. Collection, Preservation, and Storage of Samples

5.1. For the determination of total metals, acidify the sample with 1:1 high-purity HNO_3 to pH < 2.0 at the time of collection.

5.1.1. Store the sample in precleaned linear polyethylene or Teflon bottles.

5.1.2. Do not filter the sample before processing.

5.1.3. Complete the analysis within 6 months.

5.2. For the determination of dissolved metals, filter the sample through a 0.45-μm membrane filter as soon as practical after collection.

5.2.1. Use the first 50-100 mL of the sample to rinse the filter flask. Discard this portion and collect the required volume of filtrate.

5.2.2. Acidify the filtrate with 1:1 high-purity HNO_3 to pH < 2.0.

5.2.3. Store the sample in precleaned linear polyethylene or Teflon bottles.

5.2.4. Complete the analysis within 6 months.

6. Interferences

6.1. Contamination and loss are prime considerations when preparing samples for trace metal analysis. Potential contamination sources include improperly cleaned laboratory apparatus and general contamination in the laboratory environment. A clean laboratory work area designated for trace-element sample handling must be used.

6.2. Sample containers can introduce positive and negative errors in the determination of trace elements by (1) contributing contaminants through surface desorption or leaching or (2) depleting element concentrations through adsorption processes.

7. Apparatus

7.1. Clean all reusable labware (glass, quartz, polyethylene, Teflon, etc.) thoroughly before use. Test disposable labware for contamination before use.

7.2. Labware should be soaked overnight and thoroughly washed with laboratory-grade detergent and water, rinsed with water, and soaked 4 h in a mixture of dilute nitric and hydrochloric acids, followed by rinsing with ASTM Type I water and oven drying.

NOTE: Do not use chromic acid for cleaning glassware.

7.3. Balance: Analytical, capable of accurately weighing to ± 0.1 mg.

7.4. Beakers: Griffin, borosilicate glass or Teflon, 100- or 150-mL.

7.5. Centrifuge tubes: Clear polypropylene, 50-mL, with flat top cap.

7.6. Filter unit: Nalgene sterilization filter unit, 0.45-μm, 115-mL, or equivalent.

7.7. Graduated cylinders.

7.8. Hot plate: Thermolyne 2200 or equivalent, capable of maintaining temperature to ± 5°C.

7.9. Micropipettes: Rainin or equivalent, various sizes.

7.10. Volumetric flasks: assorted sizes.

7.11. Wash bottle: one-piece stem, polyethylene, with screw closure, 500-mL.

7.12. Watch glass: Borosilicate glass or Teflon, 2.5- and 3-in.

8. Reagents

8.1. ASTM Type I water.

8.2. Nitric acid (concentrated, high-purity). SeaStar, Baker Ultrex, or equivalent.

9. Calibration and Standards

9.1. Micropipettes are calibrated quarterly at 10%, 50%, and 100% of maximum volume. Results of calibration should be recorded in a laboratory notebook.

9.2. The analytical balance is calibrated regularly. An instrument accuracy check is performed annually by an agency outside the Inorganic Analysis section.

10. Procedure

10.1. Transfer a 100-mL representative aliquot of the well-mixed sample to a 150-mL Griffin beaker and add 3 mL of high-purity concentrated HNO_3. Cover the beaker with a watch glass.

10.2. Place the beaker on a hot plate and cautiously evaporate the sample to a low volume (approximately 5 mL), making certain that the sample does not boil and that no portion of the bottom of the beaker is allowed to go dry.

10.3. Cool the beaker and add another 3-mL portion of high-purity concentrated HNO_3. Cover the beaker and return it to the hot plate, allowing the sample to reflux for 1 h.

10.4. Remove the watch glass after 1 h and examine the digestate for reaction completeness. Digestion is complete if the sample is light in color, or the

appearance does not change with continued refluxing. If the digestion is not complete, repeat step 10.3 as necessary.

10.5. When the digestion is complete, remove the watch glass and allow the sample to evaporate to approximately 3 mL. Do not allow any portion of the beaker bottom to go dry. If this occurs, the sample must be redigested.

10.6. Cool the beaker and add 10 mL of ASTM Type I water. Return the beaker to the warm hot plate for 15 min to dissolve any precipitate or residue.

10.7. Rinse the beaker walls and watch glass with ASTM Type I water and, if necessary, filter the sample with the Nalgene filter apparatus to remove any undissolved material.

10.8. Rinse the filter several times with 10-15 mL portions of ASTM Type I water, and bring the final volume to 100 mL with ASTM Type I water. Record the final sample volume in the log book.

10.9. Swirl the solution until it is homogeneous.

10.10. Label two centrifuge tubes with the sample number and pour approximately equal 50-mL volumes into the centrifuge tubes. One tube will be for GFAAS analysis and the other will be for ICP-MS analysis.

10.11. The diluted digestate contains approximately 3-5% (v/v) HNO_3 and is now ready for spectrochemical analysis. Withdraw aliquots of appropriate volume and add any required matrix modifier or reagent before analysis.

11. Calculations

11.1. There are no calculations for samples run directly by GFAAS or by ICP-MS.

11.2. Samples that are diluted by the instrument operator must be corrected by applying the correct dilution factor before the results are reported.

12. Proper Waste Disposal Practices

12.1 Solid waste.

12.1.1. If a solid waste is generated that may be contaminated at a level of concern, the appropriate paperwork is completed on a case-by-case basis.

12.1.2. Complete a Waste Profile Request Form (WPRF) describing the solid waste and send to the Waste Management group for review.

12.1.3. If the Waste Management group determines that the hazardous or radioactive components of the solid waste are below the level of concern, dispose of the waste as ordinary laboratory trash.

12.1.4. If the Waste Management group determines that the solid waste is hazardous or radioactive, request pickup of the contaminated waste as described in Section 12.3.

12.2. Liquid waste.

12.2.1. Accumulate liquid waste containing hazardous contaminants, such as solutions of trace metals, in a glass jar in a secondary containment tray and keep segregated from liquid waste contaminated with organic or radioactive substances or cyanide.

12.2.2. Label the bottle with a hazardous waste label and a label indicating its use for trace-metal waste.

12.2.3. Periodically request pickup of the bottle as described in Section 12.3. Keep the bottle in the secondary containment tray until pickup by the Waste Management group.

12.3. Waste pickup.

12.3.1. Request pickup of solid or liquid waste using the current Chemical Waste Disposal Request Form (CWDR). The current Waste Profile Request Form (WPRF) that describes the waste is referenced on the CWDR.

12.3.2. The Waste Management group picks up the waste for disposal in accord with Laboratory policy.

13. Source Material

13.1. "Test Methods for Evaluation of Solid Waste: Laboratory Manual of Physical and Chemical Methods," EPA Report No. SW-846 (November 1986).

13.2. U.S. Environmental Protection Agency, "Methods for Chemical Analysis of Water and Wastes," EPA-600/4-79-020 (rev. March 1983).

13.3. U.S. Environmental Protection Agency, "Methods for the Determination of Metals in Environmental Samples," EPA-600 4-91/010 (June 1991).

13.4. Wagner, R. E. and Yogis, G. A. *Guide to Environmental Analytical Methods*, Genium Publishing Corp., Schenectady, N. Y. (1992).

TABLE I. EPA METHODS BY WHICH SAMPLES PREPARED WITH THIS PROCEDURE MAY BE ANALYZED.

	FAAS Methods		ICP-OES Methods	
Analyte	EPA 200 Series	SW-846 7000 Series	EPA 200 Series	SW-846 6000 Series
Beryllium	210.2, 200.9	7091	200.8	6020
Cadmium	213.2, 200.9	7131	200.8	6020
Chromium	218.2, 200.9	7191	200.8	6020
Cobalt	219.2, 200.9	7201	200.8	6020
Lead	239.2, 200.9	7221	200.8	—
Molybdenum	246.2	7481	200.8	6020
Thallium	279.2, 200.9	7841	200.8	6020
Vanadium	286.2	7911	200.8	—

CONTROLLED

EM-9 ANALYTICAL PROCEDURE REVIEW AND APPROVAL

Method: Preparation of Aqueous Samples for Spectrochemical Analysis—GFAAS and ICP-MS

Method No.: WI685 **Revision No.:** 0

Section Leader _____ **Date:** 10/5/93

Group Leader _____ **Date:** 10/5/93

QA Concurrence Margaret A. Gautier **Date:** 10-5-93

CONTROLLED

PREPARATION OF AQUEOUS SAMPLES FOR SPECTROCHEMICAL ANALYSIS—FAAS AND ICP-OES

Analyte: Total suspended and dissolved metals	**Method No.:** WI681 (EPA 200.0, 200.8 and SW846 3010)
Matrix: Water and wastewater	
Procedure: Open beaker digestion with HNO_3 and HCl	
Effective Date: 08/01/93	**Authors:** Richard Robinson Richard Foust

SAFETY NOTE: Before beginning this procedure, read all of the Material Safety Data Sheets for the chemicals listed in Sec. 8. Read Sec. 4.3 of the EM-9 Safety Manual for information on personal protective clothing and equipment. Read Sec. 12 of this procedure for proper waste disposal practices.

1. Principle of Method

The sample is digested with nitric acid and evaporated to low volume. It is then refluxed with hydrochloric acid, cooled, and brought to final volume with ASTM Type I water. The resulting solution is divided into two parts, one for FAAS analysis and the other for ICP-OES analysis.

2. Applicability

2.1. This method is used for the preparation of samples for the determination of total, dissolved, and suspended metals in aqueous samples. It is based on EPA Methods 200.0 and 200.8 and SW 846 Method 3010, and is approved for NPDES samples.

2.2. Samples prepared by this method may be analyzed by FAAS or ICP-OES, using the methods listed in Table I. The metals for which the method is applicable are listed in Table I.

3. Definitions

3.1. Laboratory control standard (LCS). An aliquot of laboratory reagent water to which known quantities of the method analytes are added in the laboratory.

3.2. Matrix spike. A matrix spike analysis is performed by adding a predetermined quantity of stock solutions of certain analytes to a sample matrix before sample digestion and analysis. The concentration of the spike should be at the regulatory standard level or the practical quantitation limit for the method. No

spike of the analyte is necessary when the concentration of the analyte in the sample is greater than 0.1%.

3.3. Laboratory process blank. An aliquot of reagent water that is treated exactly as a sample, including exposure to all glassware, equipment, reagents, and acids that are used with other samples.

3.4. Quality control sample (QCS). A solution of target analytes of known concentration used to fortify an aliquot of LCS matrix. The QCS is obtained from a source outside the laboratory and is used to check laboratory performance.

3.5. Sample duplicate. Duplicate samples are two separate samples taken from the same source (i.e., sample containers) and processed and analyzed independently.

3.6. Dissolved metal concentration. The concentration of metal in an aqueous sample that will pass through a 0.45-μm membrane filter assembly, before sample acidification.

3.7. Suspended metal concentration. The concentration of metal(s) in an aqueous sample that will not pass through a 0.45-μm membrane filter assembly, before sample acidification.

3.8. Total metal concentration. The concentration of metal(s) in an unfiltered aqueous sample, as determined after vigorous acid digestion, or the sum of the concentrations of dissolved and suspended metal(s).

4. Quality Control

4.1. Four laboratory control samples are processed and analyzed with each batch of 20 samples.

4.1.1. A laboratory process blank is carried throughout the entire digestion and is analyzed with each batch of 20 samples.

4.1.2. A laboratory control standard is processed and analyzed with each batch of 20 samples.

4.1.3. A sample duplicate is processed and analyzed with each batch of 20 samples.

4.1.4. A matrix spike is processed and analyzed with each batch of 20 samples.

5. Collection, Preservation, and Storage of Samples

5.1. For the determination of total metals, acidify the sample with 1:1 high-purity HNO_3 to pH < 2.0 at the time of collection.

5.1.1. Store the sample in precleaned linear polyethylene or Teflon bottles.

5.1.2. Do not filter the sample before processing.

5.1.3. Complete the analysis within 6 months.

5.2. For the determination of dissolved metals, filter the sample through a 0.45-μm membrane filter as soon as practical after collection.

5.2.1. Use the first 50-100 mL of the sample to rinse the filter flask. Discard this portion and collect the required volume of filtrate.

5.2.2. Acidify the filtrate with 1:1 high-purity HNO_3 to pH < 2.0.

5.2.3. Store the sample in precleaned linear polyethylene or Teflon bottles.

5.2.4. Complete the analysis within 6 months.

6. Interferences

6.1. Contamination and loss are prime considerations when preparing samples for trace metal analysis. Potential contamination sources include improperly cleaned laboratory apparatus and general contamination in the laboratory environment. A clean laboratory work area designated for trace-element sample handling must be used.

6.2. Sample containers can introduce positive and negative errors in the determination of trace elements by (1) contributing contaminants through surface desorption or leaching or (2) depleting element concentrations through adsorption processes.

7. Apparatus

7.1. Clean all reusable labware (glass, quartz, polyethylene, Teflon, etc.) thoroughly before use. Test disposable labware for contamination before use.

7.2. Labware should be soaked overnight and thoroughly washed with laboratory-grade detergent and water, rinsed with water and soaked 4 h in a mixture of dilute nitric and hydrochloric acids, followed by rinsing with ASTM Type I water and oven drying.

NOTE: Do not use chromic acid for cleaning glassware.

7.3. Balance: Analytical, capable of accurately weighing to ± 0.1 mg.

7.4. Beakers: Griffin, borosilicate glass or Teflon, 100- or 150-mL.

7.5. Centrifuge tubes: Clear polypropylene, 50-mL, with flat top cap.

7.6. Filter unit: Nalgene sterilization filter unit, 0.45-μm, 115-mL, or equivalent.

7.7. Graduated cylinders.

7.8. Hot plate: Thermolyne 2200 or equivalent, capable of maintaining temperature to ± 5°C.

7.9. Micropipettes: Rainin or equivalent, various sizes.

7.10. Volumetric flasks: assorted sizes.

7.11. Wash bottle: one-piece stem, polyethylene, with screw closure, 500-mL.

7.12. Watch glasses: Borosilicate glass or Teflon, 2- and 3-in.

8. Reagents

8.1. ASTM Type I water.

8.2. Nitric acid (concentrated, high-purity). SeaStar, Baker Ultrex, or equivalent.

8.3. Hydrochloric acid (concentrated, high-purity). SeaStar, Baker Ultrex, or equivalent.

8.4. Hydrochloric acid (1:1). Dilute 500 mL high-purity HCl to 1.0 L with ASTM Type I water.

9. Calibration and Standards

9.1. Micropipettes are calibrated quarterly at 10%, 50% and 100% of maximum volume. Results of calibration should be recorded in a laboratory notebook.

9.2. The analytical balance is calibrated regularly. An instrument accuracy check is performed annually by an agency outside the Inorganic Analysis section.

10. Procedure

10.1. Transfer a 100-mL representative aliquot of the well-mixed sample to a 150-mL Griffin beaker and add 3 mL of high-purity concentrated HNO_3. Cover the beaker with a watch glass.

10.2. Place the beaker on a hot plate and cautiously evaporate to a low volume (approximately 5 mL), making certain that the sample does not boil and that no portion of the bottom of the beaker is allowed to go dry.

10.3. Cool the beaker and add another 3-mL portion of high-purity concentrated HNO_3. Cover the beaker and return it to the hot plate, allowing the sample to reflux for 1 h.

10.4. Remove the watch glass after 1 h and examine the digestate for reaction completeness. Digestion is complete if the sample is light in color, or the appearance does not change with continued refluxing. If the digestion is not complete, repeat step 10.3 as necessary.

10.5. When the digestion is complete, remove the watch glass and allow the sample to evaporate to approximately 3 mL. Do not allow any portion of the beaker bottom to go dry. If this occurs, the sample must be redigested.

10.6. Cool the beaker and add 10 mL of 1:1 HCl. Return the beaker to the warm hot plate for 15 min to dissolve any precipitate or residue.

10.7. Rinse the beaker walls and watch glass with ASTM Type I water and, when necessary, filter the sample with the Nalgene filter apparatus to remove any undissolved material.

10.8. Rinse the filter several times with 10-15 mL portions of ASTM Type I water, and bring the final volume to 100 mL with ASTM Type I water.

10.9. Swirl the solution until it is homogeneous.

10.10. Label two centrifuge tubes with the sample number and pour approximately equal 50-mL volumes into the centrifuge tubes. One tube will be for FAAS analysis and the other will be for ICP-OES analysis.

10.11. The sample is now ready for spectrochemical analysis.

11. Calculations

11.1. There are no calculations for samples run directly by FAAS or by ICP-OES.

11.2. Samples that are diluted by the instrument operator must be corrected by applying the correct dilution factor before the results are reported.

12. Proper Waste Disposal Practices

12.1. Solid waste.

12.1.1. If a solid waste is generated that may be contaminated at a level of concern, the appropriate paperwork is completed on a case-by-case basis.

12.1.2. Complete a Waste Profile Request Form (WPRF) describing the solid waste and send to the Waste Management group for review.

12.1.3. If the Waste Management group determines that the hazardous or radioactive components of the solid waste are below the level of concern, dispose of the waste as ordinary laboratory trash.

12.1.4. If the Waste Management group determines that the solid waste is hazardous or radioactive, request pickup of the contaminated waste as described in Section 12.3.

12.2. Liquid waste.

12.2.1. Accumulate liquid waste containing hazardous contaminants, such as solutions of trace metals, in a glass jar in a secondary containment tray and keep segregated from liquid waste contaminated with organic or radioactive substances or cyanide.

12.2.2. Label the bottle with a hazardous waste label and a label indicating its use for trace-metal waste.

12.2.3. Periodically request pickup of the bottle as described in Section 12.3. Keep the bottle in the secondary containment tray until pickup by the Waste Management group.

12.3. Waste pickup.

12.3.1. Request pickup of solid or liquid waste using the current Chemical Waste Disposal Request Form (CWDR). The current Waste Profile Request Form (WPRF) that describes the waste is referenced on the CWDR.

12.3.2. The Waste Management group picks up the waste for disposal in accord with Laboratory policy.

13. Source Material

13.1. "Test Methods for Evaluation of Solid Waste: Laboratory Manual of Physical and Chemical Methods," EPA Report No. SW-846 (November 1986).

13.2. U.S. Environmental Protection Agency, "Methods for Chemical Analysis of Water and Wastes," EPA-600/4-79-020 (rev. March 1983).

13.3. U.S. Environmental Protection Agency, "Methods for the Determination of Metals in Environmental Samples," EPA-600 4-91/010 (June 1991).

CONTROLLED

13.4. Wagner, R. E. and Yogis, G. A. *Guide to Environmental Analytical Methods*, Genium Publishing Corp., Schenectady, N. Y. (1992).

TABLE I. EPA METHODS BY WHICH SAMPLES PREPARED WITH THIS PROCEDURE MAY BE ANALYZED.

	FAAS Methods		ICP-OES Methods	
Analyte	EPA 200 Series	SW-846 7000 Series	EPA 200 Series	SW-846 6000 Series
Aluminum	202.1	7020	200.7	6010
Arsenic	—	—	200.7	6010
Barium	208.1	7080	200.7	6010
Beryllium	210.1	7090	200.7	6010
Cadmium	213.1	7130	200.7	6010
Calcium	215.1	7140	200.7	6010
Chromium	218.1	7190	200.7	6010
Cobalt	219.1	7200	200.7	6010
Copper	220.1	7210	200.7	6010
Iron	236.1	7380	200.7	6010
Lead	239.1	7420	200.7	6010
Magnesium	242.1	7450	200.7	6010
Manganese	243.1	7460	200.7	6010
Molybdenum	246.1	7480	200.7	6010
Nickel	249.1	7520	200.7	6010
Potassium	258.1	7610	200.7	6010
Selenium	—	—	200.7	6010
Sodium	273.1	7770	200.7	6010
Thallium	279.1	7840	200.7	6010
Vanadium	286.1	7910	200.7	6010
Zinc	289.1	7950	200.7	6010

CONTROLLED

EM-9 ANALYTICAL PROCEDURE REVIEW AND APPROVAL

Method: Preparation of Aqueous Samples for Spectrochemical Analysis—FAAS and ICP-OES

Method No.: WI681 **Revision No.:** 0

Section Leader _____ **Date:** 10/5/93

Group Leader _____ **Date:** 10/5/93

QA Concurrence Margaret A. Gautier **Date:** 10-5-93

CONTROLLED

TRACE METAL DIGESTION — SLUDGE

Analyte: Ag, As, Ba, Cd, Cr, Cu, Fe, Mn, Ni, Pb, and Zn	**Method No.:** WI700
Matrix: Sludge	
Procedure: Acid digestion and atomic absorption spectrophotometry	**Accuracy and Precision:** See Sec. 2
Effective Date: 09/03/85 to 01/03/94	**Author:** Mary Carol Williams

SAFETY NOTE: Before beginning this procedure, read all of the Material Safety Data Sheets for the chemicals listed in Sec. 5. Read Sec. 4.3 of the EM-9 Safety Manual for information on personal protective clothing and equipment.

1. Principle of Method

1.1. Organic metal complexes are decomposed by the action of hot nitric and hydrofluoric acids at elevated pressure (2 atm). After dilution and filtration, acidic solutions may be measured by atomic absorption spectrophotometry (AAS), Method No. WI100. Alternate instrumental techniques include inductively coupled plasma mass spectrometry (ICPMS), Method No. EI360, or inductively coupled plasma atomic emission spectrometry (ICPAES), Method No. EI370.

2. Accuracy and Precision

2.1. The mean and standard deviations (N = 5 replicate digestions) for various analytes are listed below.

Element	Units	Mean	±	Std. Dev.	Accepted Value
		Atomic Absorption Analyses			
Ag	mg/kg	67.2	±	6.8	80.6
As	mg/kg	3.07	±	0.22	4.3
Be	mg/kg	509	±	60	580
Cd	mg/kg	20.2	±	0.87	19.1

Element	Units	Mean	±	Std. Dev.	Accepted Value
Atomic Absorption Analyses (cont)					
Pb	mg/kg	544	±	17	526
Se	mg/kg	4.91	±	1.3	4.7
V	mg/kg	27	±	2.6	23.0
Inductively Coupled Plasma Atomic Emission Analyses					
Al	g/kg	14.1	±	0.78	13.0
Ba	g/kg	1.48	±	0.017	1.6
Cr	mg/kg	215	±	5.2	193
Cu	g/kg	1.08	±	0.026	1.01
Fe	g/kg	18.6	±	0.35	16.5
Mn	mg/kg	241	±	3.5	202
Ni	mg/kg	210	±	4.4	194
Ti	g/kg	2.29	±	0.044	2.12
Zn	g/kg	1.48	±	0.017	1.32

3. Interferences

3.1. Volatile elements such as mercury may be lost during heating. Method No. WI110 is recommended for mercury in sludges.

3.2. Arsenic forms volatile compounds with the anions present in sludge ($AsCl_3$, AsF_3, AsF_5) and may be lost during heating.

4. Apparatus

4.1. Digestion.

4.1.1. Analytical balance: capable of weighing to 0.0001 g.

4.1.2. Pressure cooker: 8-qt. with 15-lb weight.

4.1.3. Hot plate: adjustable.

4.1.4. Centrifuge tubes: 50-mL, graduated, polyethylene.

4.1.5. Funnels: disposable.

4.1.6. Filter paper: Whatman No. 2.

4.1.7. Bottles: 50-mL, polyethylene with caps, disposable.

4.1.8. Grinder or mortar and pestle.

4.1.9. Pipette: 10-mL, macrotransfer.

4.1.10. Metal sieve: No. 35.

4.2. Trace metal determination. See individual analytical methods for AAS, ICPAES, or ICPMS.

5. Reagents

5.1. Nitric acid (concentrated, reagent-grade).

5.2. Hydrofluoric acid (concentrated, reagent-grade).

5.3. Double-deionized water. ASTM Type II, less than 18 μmhos/cm.

6. Procedure

6.1. Air dry solid sludge until it is thoroughly dry.

6.2. Grind the total sample until it passes through a No. 35 sieve. Store approximately 10 g of powdered sludge in a 50-mL polyethylene centrifuge tube.

6.3. Add 0.500 ± 0.001 g of powdered sludge to a 50-mL polyethylene centrifuge tube. Rinse the weighing boat with 20 mL of 10% HNO_3 and add rinsate to the tube. Add 2.0 mL of concentrated HF to the tube and cap.

6.4. Repeat Steps 6.1 to 6.3 for a digested blank, digested spike blank, spiked samples, 10% duplicates, and 10% quality control samples.

6.5. Place tubes in a test tube rack contained in the pressure cooker. Add distilled water to a level of approximately 1 in. Secure the lid on the pressure cooker.

6.6. Heat on a hot plate until steam escapes from the lid vent. Apply a pressure regulator and reduce heat just enough to keep the pressure regulator moving. Continue heating for 1 h. Turn off the heat and let the pressure cooker cool undisturbed. Remove the regulator and lid.

6.7. Dilute samples to 50 mL with double-deoinized water. Shake well and filter through a No. 2 Whatman filter paper into disposable 50-mL polyethylene bottles.

6.8. Analyze by AAS (Method No. WI100), ICPMS (Method No. EI360), or ICPAES (Method No. EI370).

7. Calculations

7.1. Determine the element concentration in the solid sludge (mg/kg) using the following equation.

$$C = A \times \frac{V}{B} \times 100 \quad ,$$

where C = concentration (mg/kg),
A = analyte in digested solution (mg/L),
B = weight of sludge digested (0.5 g), and
V = volume of dilution (50 mL).

8. Source Materials

8.1. J. S. Nielson and S. E. Hrudey, *Environ. Sci. Technol.* **18**, 130 (1984).

8.2. M. C. Williams, E. A. Stallings, T. M. Foreman, and E. S. Gladney, *Atomic Spectroscopy* **9(4)**, 110 (1988).

CONTROLLED

EM-9 ANALYTICAL PROCEDURE REVIEW AND APPROVAL

Method: Trace Metal Digestion — Sludge

Method No.: WI700

Revision No.: 0

Section Leader Charles Z. Aprd **Date:** 7/7/92

Group Leader [illegible] **Date:** 7/20/92

QA Concurrence Margaret A. Gautier **Date:** 7-8-92

8.3.6. Calculate the characteristic concentration (cc). The result should be within ±20% of the value in *Analytical Methods for AAS*.

8.3.7. Aspirate the calibration-curve standards and read the absorbance.

8.3.8. Switch the **MODE** key to **CONC** (concentration).

8.3.9. Aspirate the standards to set concentration keys as needed.

8.3.10. Read samples and QCs (blind and known).

8.3.11. Recalibrate the instrument with standards every 8 to 12 readings.

8.3.12. When finished, switch the flame **ON/OFF** key to **OFF**. Press the **CHECK FLOW** key on the auto burner control twice to relieve line pressure.

8.3.13. Turn the **POWER** switch on the automatic burner control to **OFF**.

8.3.14. Switch the PE 5000 to **STANDBY** mode.

9. Emergency Shutdown Procedure

9.1. In case of power failure, turn the **POWER** switch on the PE 5000 to **OFF**.

9.2. Turn the gas valves **OFF**.

9.3. Follow procedures for building power failure.

10. Calculations

10.1. Characteristic concentration (cc).

$$cc = \frac{C \times 0.0044}{A_s},$$

where cc = characteristic concentration for flame AA,
C = concentration of standard,
0.0044 = 1% absorbance, and
A_s = absorbance of standard.

11. Proper Waste Disposal Practices

11.1. Solid Waste

11.1.1. Solid waste contaminated with hazardous chemicals above the level of concern is not generated during the routine preparation of QC samples for analysis for inorganic contaminants.

11.1.2. If a solid waste is generated that may be contaminated at a level of concern, the appropriate paperwork is completed on a case-by-case basis.

11.1.2.1. A Waste Profile Request Form (WPRF) describing the solid waste is completed and sent to the Waste Management Group for review.

11.1.2.2. If the Waste Management Group determines that the solid waste is contaminated below the level of concern, the waste is disposed of as ordinary laboratory trash.

11.1.2.3. If the Waste Management Group determines that the solid waste is contaminated above the level of concern, pickup of the contaminated waste is requested as described in Sec. 9.3.

11.2. Liquid Waste

11.2.1. Liquid waste containing hazardous contaminants, such as solutions of trace metals, is accumulated in a coated glass jar in a secondary containment tray and is kept segregated from liquid waste contaminated with organic or radioactive substances or cyanide.

11.2.2. The bottle is labeled with a hazardous waste label and a label indicating its use for trace-metal waste.

11.2.3. The bottle is opened only for the period of time necessary to add waste to it.

11.2.4. When the bottle is full, it is capped and kept in the secondary containment tray pending pickup by the Waste Management Group.

11.2.5. A new bottle is labeled for further use.

11.3. Waste Pickup

11.3.1. Pickup by the Waste Management Group of solid waste or a full bottle of liquid waste containing trace metals is requested using the current Chemical Waste Disposal Request Form (CWDR). The current Waste

CONTROLLED

Profile Request Form (WPRF) that describes the waste is referenced on the CWDR.

11.3.2. The Waste Management Group picks up the waste for disposal in accord with Laboratory policy.

12. Source Materials

12.1. Perkin-Elmer Corp., *Analytical Methods for Atomic Absorption Spectroscopy* (Norwalk, CT, 1976).

12.2. Perkin-Elmer Corp., *Instructions: Zeeman/5000 System* (Norwalk, CT, 1982).

12.3. U.S. Environmental Protection Agency, "Methods for Chemical Analysis of Water and Wastes," EPA-600/4-79-020 (rev. March 1983).

12.4. U.S. Environmental Protection Agency, "Test Methods for Evaluation of Solid Waste: Laboratory Manual of Physical and Chemical Methods," SW-846 (Nov. 1986).

12.5. "Chemical, Hazardous, and Mixed Waste," Administrative Requirement 10-3, Chapter 1 in Los Alamos National Laboratory *Environment, Safety, and Health Manual* (most recent edition).

CONTROLLED

ATOMIC ABSORPTION METHODS – METHOD 7000 (SW-846)

Analyte: Metals	**Method No.:** WI100
Matrix: Water, waste water, extracts, leachates, and solid wastes	**Detection Limits:** variable (see Section 2).
Procedure: Atomic absorption spectrometry	**Accuracy and Precision:** variable (see Section 3)
Effective Date: 01/01/84 to 01/01/92	**Author:** Mary Carol Williams

SAFETY NOTE: Before beginning this procedure, read all of the Material Safety Data Sheets for the chemicals listed in Sec. 8. Read Sec. 4.3 of the EM-9 Safety Manual for information on personal protective clothing and equipment.

1. Principle of Method

1.1. Metals in solution may be readily determined by atomic absorption spectrometry (AAS). The method is simple, rapid, and applicable to a large number of metals in drinking, surface, and saline waters and in domestic and industrial wastes. Drinking water free of particulate matter may be analyzed directly, while ground water, other aqueous samples, EP extracts, industrial wastes, soils, sludges, sediments, and other solid wastes require digestion prior to analysis. Solubilization and digestion procedures are presented in Methods WI620, WI650, WI680, WI690, and WI700.

1.2. Although methods have been reported for the analysis of solids by atomic absorption spectrometry, the technique generally is limited to metals in solution or solubilized through some form of sample processing.

1.3. In direct-aspiration atomic absorption spectrometry, a sample is aspirated and atomized in a flame. A light beam from a hollow cathode lamp or an electrodeless discharge lamp is directed through the flame, into a monochromator, and onto a detector that measures the amount of absorbed light. Absorption depends upon the presence of free, unexcited ground-state atoms in the flame. Because the absorbed wavelength of the light beam is characteristic of only the metal being determined, the light energy absorbed by the flame is a measure of the concentration of that metal in the sample. This principle is the basis of atomic absorption spectrometry.

1.4. When using the furnace technique in conjunction with an atomic absorption spectrometer, a representative aliquot of a sample is placed in the graphite tube in the furnace, evaporated to dryness, charred, and atomized. Because a greater percentage of available analyte atoms is vaporized and dissociated for absorption

in the tube rather than the flame, the use of smaller sample volumes or detection of lower concentrations of elements is possible. The principle is essentially the same as with direct aspiration atomic absorption, except that a furnace, rather than a flame, is used to atomize the sample. Radiation from a given excited element is passed through the vapor containing ground-state atoms of that element. The intensity of the transmitted radiation decreases in proportion to the amount of the ground-state element in the vapor. The metal atoms to be measured are placed in the beam of radiation by increasing the temperature of the furnace, thereby causing the injected specimen to be volatilized. A monochromator isolates the characteristic radiation from the hollow cathode lamp or electrodeless discharge lamp, and a photosensitive device measures the attenuated transmitted radiation.

2. Detection Limits

2.1. Detection limits, sensitivity, and optimum ranges for the metals will vary with the matrices and models of atomic absorption spectrometers.

2.1.1. The data shown in Table I provide some indication of the detection limits obtainable by direct aspiration and by furnace techniques. For clean, aqueous samples, the detection limits shown in the table for direct aspiration may be extended downward with scale expansion and upward by using a less sensitive wavelength or by rotating the burner head.

2.1.2. Detection limits for direct aspiration may also be extended through concentration of the sample and/or through solvent extraction techniques. For certain samples, lower concentrations may also be determined using the furnace techniques.

2.1.3 The detection limits given in Table I are somewhat dependent on equipment (such as the type of spectrophotometer and furnace accessory, the energy source, and the degree of electrical expansion of the output signal), and are greatly dependent on sample matrix.

2.1.4. When using furnace techniques, the analyst should be aware that, at elevated temperatures, chemical reactions may occur that may result in either suppression or enhancement of the analysis element. To ensure valid data with furnace techniques, the analyst must examine each matrix for interference effects (Step 5.2) and, if detected, treat them accordingly, using either successive dilution, matrix modification, or the method of standard additions (Step 5.2.1).

CONTROLLED

2.1.5. The Contract Required Detection Limits (CRDLs) are also listed in Table I.

TABLE I. ATOMIC ABSORPTION CONCENTRATION RANGES

	Direct Aspiration		Furnace[a,b]	
Metal	Det. Limit (mg/L)	Sensitivity (mg/L)	Det. Limit (mg/L)	CRDL (mg/L)
Aluminum	0.1	1	--	0.2
Antimony	0.2	0.5	0.003	0.06
Arsenic[b]	--	--	0.001	0.01
Barium	0.1	0.4	--	0.2
Beryllium	0.005	0.025	0.0002	0.005
Cadmium	0.005	0.025	0.0001	0.005
Calcium	0.01	0.08	--	5
Chromium	0.05	0.25	0.001	0.01
Cobalt	0.05	0.2	0.001	0.05
Copper	0.02	0.1	--	0.025
Iron	0.03	0.12	--	0.1
Lead	0.1	0.5	0.001	0.005
Magnesium	0.001	0.007	--	5
Manganese	0.01	0.05	--	0.015
Molybdenum	0.1	0.4	0.001	--
Nickel	0.04	0.15	--	0.04
Potassium	0.01	0.04	--	5
Selenium[b]	0.002	--	0.002	0.005
Silver	0.01	0.06	--	0.01
Sodium	0.002	0.15	--	5
Thallium	0.1	0.5	0.001	0.01

TABLE I. ATOMIC ABSORPTION CONCENTRATION RANGES (cont)				
	Direct Aspiration		Furnace[a,b]	
Metal	Det. Limit (mg/L)	Sensitivity (mg/L)	Det. Limit (mg/L)	CRDL (mg/L)
Tin	0.8	4	--	0.04
Vanadium	0.2	0.8	0.004	0.05
Zinc	0.005	0.02	--	0.02

[a] For furnace sensitivity values, consult instrument operating manual.

[b] The listed furnace values are those expected when using 20-μL injections and normal gas flow, except in the cases of arsenic and selenium, where gas interrupt is used.

3. Accuracy and Precision

3.1. The table below lists accuracy and precision data on materials analyzed by EM-9.

ACCURACY AND PRECISION DATA FOR STANDARD REFERENCE MATERIALS ANALYZED BY EM-9				
Element	No. of Samples	Mean (μg/L)	Std. Dev. (μg/L)	Certified Value (μg/L)
Graphite Furnace				
As	41	27.4	1.4	26.7 ± 3.8
Cr	44	6.7	0.8	7 ± 1
Se	59	10.9	1.0	11 ± 2
Tl	100	7.0	0.9	8 ± 0.2
Flame				
Cd	17	24.4	1.7	2.5 ± 3.8
Cr	19	103	4.5	100 ± 16
Cu	21	103	3.0	100 ± 11
Fe	64	104	4.0	100 ± 18

CONTROLLED

ACCURACY AND PRECISION DATA FOR STANDARD REFERENCE MATERIALS ANALYZED BY EM-9 (cont)

Element	No. of Samples	Mean (μg/L)	Std. Dev. (μg/L)	Certified Value (μg/L)
Pb	24	100	6.0	100 ± 15
Zn	18	101	1.6	100 ± 11
Ag	113	502	0.007	500 ± 50

4. Quality Control

4.1. All quality control (QC) data should be kept up to date and available for easy reference or inspection.

4.2. A calibration curve must be prepared each day with a minimum of one reagent blank and three standards, verified by use of at least one reagent blank and one standard at or near the midrange. Checks throughout the day must be within 20% of the original curve.

4.3. If 20 or more samples per day are analyzed, the working standard curve must be verified by running an additional standard at or near the midrange every 10 samples. Checks must be within ±20% of the true value.

4.4. At least one duplicate and one spike sample should be run every 10 samples or with each matrix type to verify the precision of the method.

4.5. Serial dilution.

4.5.1. Withdraw from the sample two equal aliquots. To one of the aliquots add a known amount of analyte and dilute both aliquots to the same predetermined volume.

NOTE: The dilution volume should be based on the analysis of the undiluted sample. Preferably, the dilution should be 1:4, keeping in mind that the diluted value should be at least 5 times the instrument detection limit. Under no circumstances should the dilution be less than 1:1.

4.5.2. Analyze the diluted aliquots.

4.5.3. The unspiked results, multiplied by the dilution factor, should be compared to the original determination. Agreement of the results (within 10%) indicates the absence of interference.

4.5.4. Comparison of the actual signal from the spike with the expected response from the analyte in an aqueous standard should help confirm the finding from the dilution analysis.

4.6. Method of standard additions. Where the sample matrix is so complex that viscosity, surface tension, and components cannot be accurately matched with standards, the method of standard addition may be used. Two versions of this method are outlined below.

4.6.1. In one version of this method, equal volumes of sample are added to a double-deionized (Type II) water blank and to a standard. If a higher degree of accuracy is required, more than one addition should be made. The absorbance of each solution is determined and then plotted on the vertical axis of a graph, with the concentrations of the known standards plotted on the horizontal axis. When the resulting line is extrapolated back to zero absorbance, the point of interception of the abscissa is the concentration of the unknown. The abscissa on the left of the ordinate is scaled the same as on the right side.

4.6.2. A second version of this technique is the single-addition method, in which two identical aliquots of the sample solution, each of volume V_x, are taken. To the first (labeled A) is added a small volume V_s of a standard analyte solution of concentration C_s. To the second (labeled B) is added the same volume V_s of the solvent. The analytical signals of A and B (S_A and S_B, respectively) are measured and corrected for nonanalyte signals. The unknown sample concentration C_x is calculated using the following equation.

$$C_x = \frac{S_B V_s C_s}{(S_A - S_B)\, V_x} ,$$

where C_x = unknown sample concentration,
S_A and S_B = the analytical signals (corrected for the blank),
V_s = volume of standard analyte solution,
C_s = concentration of standard analyte solutions, and
V_x = volume of aliquot of sample solution.

NOTE: V_s and C_s should be chosen so that S_A is roughly twice S_B on the average. It is best if V_s is made much less than V_x, so that C_s is much greater than C_x, to avoid excess dilution of the sample matrix. If a separation or concentration step is used, the additions are best made first and carried through the entire procedure.

CONTROLLED

4.6.3. The method of standard additions can be very useful. However, the following limitations must be taken into consideration for the results to be valid.

- The absorbance plot of sample and standards must be linear over the concentration range of concern. For best results, the slope of the plot should be nearly the same as the slope of the aqueous standard curve. If the slope is significantly different (more than 20%), caution should be exercised.

- The effect of the interference should not vary as the ratio of analyte concentration to sample matrix changes, and the standard addition should respond in a similar manner as the analyte.

- The determination must be free of spectral interference and corrected for nonspecific background interference.

5. Interferences

5.1. Direct aspiration.

5.1.1. The most troublesome interference in AAS is usually termed "chemical" and is caused by lack of absorption of atoms bound in molecular combination in the flame. This phenomenon can occur when the flame is not sufficiently hot to dissociate the molecule, as in the case of phosphate interference with magnesium, or when the dissociated atom is immediately oxidized to a compound that will not dissociate further at the temperature of the flame. The addition of lanthanum will overcome phosphate interference in magnesium, calcium, and barium determinations. Similarly, silica interference in the determination of manganese can be eliminated by the addition of calcium.

5.1.2. Chemical interferences may also be eliminated by separating the metal from the interfering material. Although complexing agents are employed primarily to increase the sensitivity of the analysis, they may also be used to eliminate or reduce interferences.

5.1.3. The presence of high dissolved solids in the sample may result in an interference from nonatomic absorbance such as light scattering. If a background correction is not available, a nonabsorbing wavelength should be checked. Preferably, samples containing high solids should be extracted.

5.1.4. Ionization interferences occur when the flame temperature is sufficiently high to generate the removal of an electron from a neutral atom, giving a positively charged ion. This type of interference can generally be controlled by the addition, to both standard and sample solutions, of a large excess (1,000 mg/L) of an easily ionized element such as K, Na, Li, or Cs.

5.1.5. Spectral interferences can occur when an absorbing wavelength of an element that is present in the sample but not being determined falls within the width of the absorption line of the element of interest. The results of the determination will then be erroneously high, due to the contribution of the interfering element to the atomic absorption signal. Interference can also occur when resonant energy from another element in a multielement lamp, or from a metal impurity in the lamp cathode, falls within the bandpass of the slit setting when that other metal is present in the sample. This type of interference may sometimes be reduced by narrowing the slit width.

5.1.6. Samples and standards should be monitored for viscosity differences that may alter the aspiration rate.

5.1.7. All metals are not equally stable in the digestate, especially if it contains only HNO_3, not HNO_3 and HCl. The digestate should be analyzed as soon as possible, with preference given to Sn, Sb, Mo, Ba, and Ag.

5.2. Furnace procedure.

5.2.1. Although the problem of oxide formation is greatly reduced with furnace procedures because atomization occurs in an inert atmosphere, the technique is still subject to chemical interferences. The composition of the sample matrix can have a major effect on the analysis. It is these matrix effects which must be determined and taken into consideration in the analysis of each different matrix encountered. To help verify the absence of matrix or chemical interference, the serial dilution technique (see Step 4.5) may be used. Those samples which indicate the presence of interference should be treated in one or more of the following ways:

- Successively dilute and reanalyze the samples to eliminate interferences.

- Modify the sample matrix to either remove the interferences or stabilize the analyte. Examples include the addition of ammonium nitrate to remove alkali chlorides and the addition of ammonium phosphate to retain cadmium. The mixing of hydrogen with the inert purge gas has also been used to suppress chemical interference. The hydrogen acts as a reducing agent and aids in molecular dissociation.

CONTROLLED

- Analyze the sample by the method of standard additions while noting the precautions and limitations of its use (see Step 4.6).

5.2.2. Gases generated in the furnace during atomization may have molecular absorption bands encompassing the analytical wavelength. When this occurs, use either background correction or choose an alternate wavelength. Background correction may also compensate for nonspecific broad-band absorption interference.

5.2.3. Continuum background correction cannot correct for all types of background interference. When the background interference cannot be compensated for, chemically remove the analyte or use an alternate form of background correction, e.g., Zeeman background correction.

5.2.4. Interference from a smoke-producing sample matrix can sometimes be reduced by extending the charring time at a higher temperature or utilizing an ashing cycle in the presence of air. Care must be taken, however, to prevent loss of the analyte.

5.2.5. Samples containing large amounts of organic materials should be oxidized by conventional acid digestion before being placed in the furnace. This will minimize broad-band absorption.

5.2.6. Anion interference studies in the graphite furnace indicate that, under conditions other than isothermal, the nitrate anion is preferred. Therefore, nitric acid is preferable for any digestion or solubilization step. If another acid in addition to HNO_3 is required, a minimum amount should be used. This applies particularly to hydrochloric acid and, to a lesser extent, to sulfuric and phosphoric acids.

5.2.7. Carbide formation resulting from the chemical environment of the furnace has been observed. When carbides form, the metal is released very slowly from the resulting metal carbide as atomization continues. For example, molybdenum may require 30 s or more atomization time before the signal returns to baseline levels. Carbide formation is greatly reduced and the sensitivity increased with the use of a pyrolytically coated graphite furnace.

5.2.8. For comments on spectral interference, see Step 5.1.5.

5.2.9. Cross-contamination and contamination of the sample can be major sources of error because of the extreme sensitivities achieved with the furnace. The sample preparation work area should be kept scrupulously clean. All glassware should be cleaned as directed in Step 6.2. Pipette tips are a frequent source of contamination. If suspected, they should be acid-soaked with 1:5 HNO_3 and rinsed thoroughly with tap and double-deionized (Type II) water. The use of a better-grade pipette tip

can greatly reduce this problem. Special attention should be given to reagent blanks in both analysis and in the correction of analytical results. Lastly, pyrolytic graphite, because of the production process and handling, can become contaminated. As many as five to ten high-temperature burns may be required to clean the tube before use.

6. Handling and Storage of Samples

6.1. Table II lists sample preservation and holding times.

TABLE II. SAMPLE PRESERVATION AND HOLDING TIMES

Measurement Parameter	Container[a]	Preservative[b]	Maximum Holding[c]
Waters			
Metals[d]	P,G	HNO_3 to pH < 2	6 months
Mercury	P,G	HNO_3 to pH < 2	28 days
Soils/Sediments/Wastes			
Store at 4°C (± 2°C) until digestion.			

[a] Polyethylene (P) or glass (G).
[b] Sample preservation is performed by the sampler immediately upon sample collection.
[c] Samples must be analyzed as soon as possible after collection. The times listed are the maximum times that samples may be held before analysis and still be considered valid.
[d] Samples are filtered immediately on-site by the sampler before adding preservative for dissolved elements.

6.2. Glassware cleaning. Wash all glassware and polyethylene or Teflon containers, including sample bottles, in the following sequence: detergent, tap water, 1:1 nitric acid, tap water, 1:1 hydrochloric acid, tap water, and Type II water. (Chromic acid should not be used as a cleaning agent for glassware if chromium is to be included in the analytical scheme.) If, through an active analytical quality control program using spiked samples and reagent blanks, it can be documented that certain steps in the cleaning procedure are not required for routine samples, those steps may be eliminated from the procedure.

CONTROLLED

7. Apparatus

7.1. Atomic absorption spectrophotometer: Model 5000, Perkin-Elmer, Norwalk, Connecticut or similar double-beam instrument having a grating monochromator, photomultiplier detector, adjustable slits, a wavelength range of 190 to 800 nm, and provisions for interfacing with a strip-chart recorder.

7.2. Burner: the burner recommended by the particular instrument manufacturer should be used. A nitrous oxide burner is required for certain elements.

7.3. Hollow cathode lamps or electrodeless discharge lamps.

7.4. Graphite furnace: a Zeeman furnace device capable of reaching the specified temperatures is satisfactory. Pyrolytically coated graphite tubes and platforms.

7.5. Strip-chart recorder: recommended for furnace work so that there will be a permanent record. Problems with the analysis such as drift, incomplete atomization, losses during charring, changes in sensitivity, peak shape, etc., can be easily recognized from the chart.

7.6. Pipettes: 5- to 1000-μL with disposable tips. Pipette tips should be checked as a possible source of contamination prior to use.

7.7. Pipettes: class A, volumetric.

7.8. Pressure-reducing valves: supplies of fuel and oxidant should be maintained by suitable valves at pressures somewhat higher than the controlled operating pressure of the instrument.

7.9. Polycarbonate cups: disposable.

8. Reagents

8.1. Type II water (double-deionized, less than 18 μmhos/cm). Use Type II water for the preparation of all reagents and calibration standards and as dilution water.

8.2. Nitric acid (HNO_3, 1:1). Use a spectrograde acid certified for AAS use. Prepare a 1:1 dilution with Type II water by adding the concentrated acid to an equal volume of water.

8.3. Hydrochloric acid (HCl, 1:1). Use a spectrograde acid certified for AAS use. Prepare a 1:1 dilution with Type II water by adding the concentrated acid to an equal volume of water.

8.4. Fuel and oxidant. Commercial-grade acetylene is generally acceptable. Air may be supplied from a compressed-air line, a laboratory compressor, or a cylinder of compressed air. Reagent-grade nitrous oxide is also required for certain determinations. Standard, commercially available argon and nitrogen are required for furnace work.

8.5. Argon (100-psi minimum tank pressure and 50-psi minimum regulator pressure).

8.6. Cooling water (pressure <30 psi, temperature 15°C-25°C).

9. Calibration and Standards

9.1. Stock standard metal solutions. Stock standard solutions are prepared from high-purity metals, oxides, or nonhygroscopic reagent-grade salts using Type II water and redistilled nitric or hydrochloric acids. Sulfuric or phosphoric acids should be avoided because they produce an adverse effect on many elements. The stock solutions are prepared at concentrations of 1,000 mg of the metal per liter. Commercially available standard solutions may also be used. Where the sample viscosity, surface tension, and components cannot be accurately matched with standards, the method of standard additions should be used (see Step 4.6).

9.2. Calibration standards. For those instruments that do not read out directly in concentration, a calibration curve is prepared to cover the appropriate concentration range. Usually, this means the preparation of standards which produce an absorbance of 0.0 to 0.7. Calibration standards are prepared by diluting the stock metal solutions at the time of analysis. For best results, calibration standards should be prepared fresh each time a batch of samples is analyzed. Prepare a blank and at least three calibration standards in graduated amounts in the appropriate range of the linear part of the curve. The calibration standards should be prepared using the same type of acid or acids at the same concentrations as found in the samples following processing. Beginning with the blank and working toward the highest-concentration standard, aspirate the solutions and record the readings. Repeat the operation with both the calibration standards and the samples a sufficient number of times to secure a reliable average reading for each solution.

9.3. Spiking standards. Prepare a mixed spiking solution so that a 1-mL aliquot will give the spike levels listed in Table III.

CONTROLLED

TABLE III. SPIKING LEVELS[a] FOR SPIKED SAMPLE ANALYSIS

	Flame AAS (μg/L)		Furnace AAS (μg/L)	
Element	Water	Sediment[b]	Water	Sediment[b]
Aluminum	2,000	*		
Antimony			50	50
Arsenic			20	40
Barium	2,000	2,000		
Beryllium	50	50		
Cadmium	50	50	5	5
Calcium	100,000	*		
Chromium	200	200		
Cobalt	500	500		
Copper	250	250		
Iron	1,000	*		
Lead	500	500	20	
Magnesium	50,000	*		
Manganese	200	500		
Nickel	400	500		
Potassium	50,000	*		
Selenium			10	10
Silver	50	50		
Sodium	100,000	*		

[a] Amount to add prior to digestion/distillation — choose amount appropriate to method of analysis. Elements without spike levels and not designated with an asterisk should be spiked at appropriate levels.

[b] The levels shown indicate concentrations in the digestate of the spiked sample.

* No spike required.

TABLE III. SPIKING LEVEL[a] FOR SPIKED SAMPLE ANALYSIS (cont)

	Flame AAS (μg/L)		Furnace AAS (μg/L)	
Element	Water	Sediment[b]	Water	Sediment[b]
Thallium			50	50
Tin	400	500	200	
Vanadium	500	500		
Zinc	200	500		

[a] Amount to add prior to digestion/distillation — choose amount appropriate to method of analysis. Elements without spike levels and not designated with an asterisk should be spiked at appropriate levels.

[b] The levels shown indicate concentrations in the digestate of the spiked sample.

* No spike required.

10. Procedure

10.1. Preliminary treatment of waste water, ground water, EP extracts, and industrial waste is always necessary because of the complexity and variability of sample matrices. Solids, slurries, and suspended material must be subjected to a solubilization process before analysis. This process may vary with the metals to be determined and the nature of the sample being analyzed. Solubilization and digestion procedures are presented in Methods WI620, WI650, WI680, WI690, and WI700.

10.2. Direct aspiration (flame) procedure.

10.2.1. Optimize the AAS instrument. Read the magnetic card or manually type in the specifications for each analyte as listed in Table IV. Using **SET-UP**, adjust the lamp position to its peak value. If the peak value reads 99, push **GAIN** to reset to midrange. While aspirating a blank, set **AZ**. Using the sensitivity check solution, adjust the burner position (vertically, horizontally, and laterally), nebulizer rate, and flame conditions. The absorbance should read between 0.18 - 0.22. If the absorbance is <0.18, reoptimize and/or check standards. Check the working standards for repeatability of absorbance with previous analyses. Calculate characteristic concentration as follows.

CONTROLLED

$$CC = Cs \times \frac{0.0044}{A} ,$$

where: CC = characteristic concentration,
Cs = concentration of standard (mg/L), and
A = measured absorbance.

This should agree with the reported value to within 20% (see the Perkin-Elmer analytical methods book, Source Material 12.2).

10.2.2. Use digested samples. Any sample containing visible particulates should be filtered through a Whatman No. 2 filter that has been washed with Type II water. Ten percent of the samples should be run in duplicate and another 10% should be spiked.

10.2.3. Do not use different injection volumes for samples and standards. Instead, the sample should be diluted and the same size injection volume used for both samples and standards.

10.2.4. Load standards, QC samples, and samples in the carousel of the autosampler (50 maximum). Standards should be placed to recalibrate every 10 samples. The instrument expects three standards. If fewer standards are used, leave the corresponding positions empty. Place noncalibrating standards in positions to read as samples. Samples may also be aspirated manually.

10.2.5. Load a formatted disk in disk drive 1 and the data collection disk in drive 0 of the data station. Push **HOLD** and **PRINT** on the Perkin-Elmer 5000 before data station set-up. Set up the data collection disk by listing the date, types of samples, analyte, and sample number (including dilution). If the order is reversed, the data station will display an error message.

10.2.6. Key in recalibration positions, read delay (5 s), program delay (5 min), last sample number, and program number (corresponding to the program number on the Perkin-Elmer 5000 and the order selected for the data station). Be sure the electrical connection from the autosampler to the data station has been made.

10.2.7. To get an average of three results, push **3** then **AVG**. Push **3** then **CV** to get standard deviation.

10.3. Furnace procedure.

10.3.1. Optimize the AAS instrument. Read the magnetic card or manually type in the specifications for each analyte as indicated in Tables V and VI. Using **SET UP**, adjust the lamp position to its peak value. If the peak value reads 99, push **GAIN** to reset to midrange. To check for reagent contamination, run the furnace empty and set to zero. Then read the absorbance with the blank only and then with the blank plus reagent. Both of these should read <0.02 absorbance units. Check the working standards for repeatability of absorbance with previous analyses.

10.3.2. Use digested samples. Any sample containing visible particulates should be filtered through a Whatman No. 2 filter that has been washed with Type II water. Ten percent of the samples should be run in duplicate and another 10% should be spiked.

10.3.3. Load standards, QC samples, and samples in the carousel of the autosampler (35 maximum). Place noncalibrating standards in positions to be read as samples. A total of one blank and four standards must be used for Environmental Proctection Agency procedures.

10.3.4. Load a formatted disk in disk drive 1 and the data collection disk in drive 0 of the data station. Push **PEAK AREA** and **PRINT** on the Perkin-Elmer 5000 before data station set-up. Set up the data collection disk by listing the date, types of samples, analyte, and sample number. If the order is reversed, the data station will display an error message.

10.3.5. On the AS-40 autosampler panel, key in recalibration positions, last sample number, sample volume (μL), alternate volume (matrix modifier) (μL), HGA program number, and AAS instrument program number (corresponding to program number on the Perkin-Elmer 5000 and the order selected for the data station). Be sure the electrical connection from the autosampler to the data station has been made. Use of a platform in the pyrocoated tube (stepped temperature platform furnace conditions) is required for most elements.

10.4. After all analyses have been completed, obtain a printout of the data by pushing **TO DISK** twice, then **REPORT**. Replace the data collection disk with the report disk. Select the analyses to be reported and the form of the output from the menu. Then print the result. Attach the print output to the bound Laboratory notebook.

CONTROLLED

11. Calculations

11.1. Determine the metal concentration for both direct aspiration and furnace techniques by reading the metal value in mg/L or μg/L from the calibration curve or directly from the read-out system of the instrument.

11.2. If the sample was diluted, use the following equation.

$$C = A \frac{V + B}{V} ,$$

where C = concentration of metal in sample (μg/L),
A = amount of metal in diluted aliquot from calibration curve (μg/L),
B = acid blank matrix used for dilution (mL), and
V = sample aliquot (mL).

11.3. For solid samples, report all concentrations as μg/kg based on wet weight using the following equation.

$$C = \frac{A \times V}{W} ,$$

where C = concentration of metal in sample (μg/kg),
A = amount of metal in processed sample from calibration curve (μg/L),
V = final volume of the processed sample (mL), and
W = weight of sample (g).

12. Source Materials

12.1. US Environmental Protection Agency, "Methods for Chemical Analysis of Water and Wastes", EPA-600/4-79-020 (revised March 1983).

12.2. Perkin-Elmer, *Analytical Methods for Atomic Absorption Spectrophotometry* (Perkin-Elmer, Norwalk, Connecticut, 1982).

12.3. Perkin-Elmer, *Instructions: Zeeman/5000 System* (Perkin-Elmer, Norwalk, Connecticut, 1982).

TABLE IV. METAL ANALYSIS BY FLAME ATOMIC ABSORPTION SPECTROMETRY

Metal	RCRA Method[a]	Flame Fuel/ Oxidant[b]	Wave-length[c,d] (nm)	Slit Width (nm)	Det. Limit[e] (mg/L)	Conc. Range[f] (mg/L)	IS[g]
Al	7020	Ac/N_2O(R)	324.7(HCL)	0.7	0.1	5-50	2% K as KCl
Sb	7040	Ac/Air(L)	217.6(EDL) 231.1*	0.7	0.2	1-40	--
Ba	7080	Ac/N_2O(R)	553.6(HCL)	0.4	0.1	1-20	2% K as KCl
Be	7090	Ac/N_2O(R)	234.0(HCL)	0.7	0.005	0.05-2	0.1% F as HF if Al > 0.5 g/L
Cd	7130	Ac/Air(L)	228.8(HCL, EDL)	0.7	0.005	0.05-2	--
Ca	7140	Ac/N_2O(R)	422.7(HCL)	0.7	0.01	0.2-7	10% LaCl
Cr	7190	Ac/N_2O(R)	357.9(HCL)	0.7	0.05	0.5-10	--
Co	7200	Ac/Air(L)	240.7(HCL)	0.2	0.05	0.5-5	--
Cu	7210	Ac/Air(L)	324.7(HCL)	0.7	0.02	0.2-5	--
Fe	7380	Ac/Air(L)	248.3(HCL)	0.2	0.03	0.3-5	--
Pb	7420	Ac/Air(L)	283.3(HCL, EDL)	0.7	0.1	1-20	--
Li		Ac/Air(L)	670.8(HCL)	1.4	0.05	0.5-3	

[a]Resource Conservation and Recovery Act
[b]Acetylene (Ac), nitrous oxide (N_2O), air, fuel rich (R), fuel lean (L), stoichiometric (S).
[c]Hollow cathode lamp (HCL), electrodeless discharge lamp (EDL).
[d]Background correction required for all wavelengths below 325 nm.
[e]Detection limit.
[f]Concentration range.
[g]Interference suppressor.
*If [Pb] > 1000 mg/L.

CONTROLLED

TABLE IV. METAL ANALYSIS BY FLAME ATOMIC ABSORPTION SPECTROMETRY (cont)

Metal	RCRA Method[a]	Flame Fuel/ Oxidant[b]	Wave-length[c,d] (nm)	Slit Width (nm)	Det. Limit[e] (mg/L)	Conc. Range[f] (mg/L)	IS[g]
Mg	7450	Ac/Air(L)	285.2(HCL)	0.7	0.007	0.02-0.05	10% LaCl
Mn	7460	Ac/Air(L-S)	279.5(HCL)	0.2	0.01	0.1-3	--
Mo	7480	Ac/N_2O(R)	313.3(HCL)	0.7	0.1	1-40	2% Al $(NO_3)_3$
Ni	7520	Ac/Air(L)	232.0(HCL)	0.2	0.04	0.3-5	--
K	7610	Ac/Air(L)	766.5(HCL)	0.7	0.01	0.1-2	--
Ag	7760	Ac/Air(L)	328.1(HCL)	0.7	0.010	0.05-5	--
Na	7770	Ac/Air(L)	589.6(HCL)	0.7	0.002	0.03-1	--
Tl	7840	Ac/Air(L)	276.8(HCL, EDL)	0.7	0.1	1-20	--
Sn	7870	Ac/N_2O(R)	286.3(HCL)	0.7	0.8	10-300	--
V	7910	Ac/N_2O(R)	318.4(HCL)	0.7	0.2	2-100	--
Zn	7950	Ac/Air(L)	213.9(HCL)	0.7	0.005	0.05-1	--

[a]Resource Conservation and Recovery Act
[b]Acetylene (Ac), nitrous oxide (N_2O), air, fuel rich (R), fuel lean (L), stoichiometric (S).
[c]Hollow cathode lamp (HCL), electrodeless discharge lamp (EDL).
[d]Background correction required for all wavelengths below 325 nm.
[e]Detection limit.
[f]Concentration range.
[g]Interference suppressor.
*If [Pb] > 1000 mg/L.

TABLE V. METAL ANALYSIS BY ZEEMAN GRAPHITE FURNACE ATOMIC ABSORPTION SPECTROMETRY

Metal	RCRA Method	Purge Gas	Wavelength (nm)	Slit Width (nm)	Detection Limit (μg/L)	Concentration Range (μg/L)
Sb	7041	Ar, N_2	217.6(HCL, EDL)	0.7	3	20-300
As	7060	Ar	193.7(EDL)	0.7	2	5-100
Be	7091	Ar	234.9(HCL)	0.7	0.2	1-30
Cd	7131	Ar	228.8(HCL, EDL)	0.7	0.1	0.5-10
Cr[a]	7191	Ar	357.9(HCL)	0.7	1	5-100
Co	7201	Ar	240.7(HCL)	0.2	1	5-100
Pb	7421	Ar	283.3(HCL, EDL)	0.7	1	5-100
Se	7740	Ar	196.0(EDL)	2.0	2	5-100
Sn	7870	Ar	286.3(EDL)	0.7	5	20-100
Ag		Ar	328.1(HCL)	0.7	0.5	2-50
Tl	7841	Ar, N_2	276.8(EDL)	0.7	1	5-100
V[a]	7911	Ar	318.4(HCL)	0.7	4	10-200

[a] The atomization tubes used are pyrocoated graphite with a pyrocoated platform except for chromium and vanadium, which do not use the platform. These refractory metals are atomized off the wall of a pyrocoated tube.

CONTROLLED

TABLE VI. CONDITIONS FOR TRACE METALS ANALYSIS IN ZEEMAN FURNACE

	Matrix Modifier	Dry temperature/ ramp/bold	Ash temperature/ ramp/bold	Atomization temperature/ ramp/bold
Sb	0.02 mg Ni	90/5/20 130/10/10	1250/5/25	2400/0/5
As	0.2 mg Ni	90/5/20 130/10/10	1400/5/10	2300/0/5
Be	0.05 mg $Mg(NO_3)_2$	90/5/20 130/10/10	1350/10/35	2650/0/5
Cd	0.2 mg PO_4 + 0.01 mg $Mg(NO_3)_2$	90/5/20 130/10/10	650/5/40 20/5/10	1600/0/5
Cr	0.05 mg $Mg(NO_3)_2$	90/5/20 130/10/10	1650/30/20	2500/0/5
Pb	0.2 mg PO_4+ 0.01 mg $Mg(NO_3)_2$	90/5/20 130/10/10	800/5/45 20/10/10	1700/0/5
Se	0.2 mg Ni	90/5/20 130/10/10	800/5/10	2400/0/5
Tl	1% H_2SO_4	90/5/20 140/10/10	750/15/40	2000/0/5

All furnaces have a clean-out step with temperature of 2650°C for 5 s and a cool-down of 20°C for 20 s. The atomization step is read -1 and record -5.

Interference suppressors

KCl - Dissolve 95 g potassium chloride (KCl) in 400 mL of Type II water and dilute to 1 L.

LaCl - Dissolve 29 g lanthanium oxide (La_2O_3) in 250 mL of concentrated HCl (CAUTION, reaction is violent) and dilute to 500 mL with Type II water.

$Al(NO_3)_3$ - Dissolve 139 g aluminum nitrate $Al(NO_3)_3 \bullet 9\ H_2O$ in 150 mL of Type II water. Heat to dissolve. Cool and dilute to 200 mL with Type II water.

TABLE VI. CONDITIONS FOR TRACE METALS ANALYSIS IN ZEEMAN FURNACE (cont)

	Matrix Modifier	Dry temperature/ ramp/bold	Ash temperature/ ramp/bold	Atomization temperature/ ramp/bold
V	0.05 mg $Mg(NO_3)_2$	90/5/20 130/10/10	1300/15/20	2650/0/5
Sn	0.2 mg PO_4 + 0.01 mg $Mg(NO_3)_2$	90/5/20 130/10/10	800/5/25	2100/0/5

All furnaces have a clean-out step with temperature of 2650°C for 5 s and a cool-down of 20°C for 20 s. The atomization step is read -1 and record -5.

Interference suppressors

KCl - Dissolve 95 g potassium chloride (KCl) in 400 mL of Type II water and dilute to 1 L.

LaCl - Dissolve 29 g lanthanium oxide (La_2O_3) in 250 mL of concentrated HCl (**CAUTION**, reaction is violent) and dilute to 500 mL with Type II water.

$Al(NO_3)_3$ - Dissolve 139 g aluminum nitrate $Al(NO_3)_3 \bullet 9\ H_2O$ in 150 mL of Type II water. Heat to dissolve. Cool and dilute to 200 mL with Type II water.

CONTROLLED

EM-9 ANALYTICAL PROCEDURE REVIEW AND APPROVAL

Method: Zinc in Water and Soil Extracts — Flame AA

Method No.: EI210 **Revision No.:** 0

Section Leader Charles Apt **Date:** 11/25/92

Group Leader [illegible] **Date:** 12/4/92

QA Concurrence Margaret A. Gautier **Date:** 12-2-92

CONTROLLED

BARIUM IN SOILS — ACID DIGESTION AND ICPAES

Analyte: Barium	**Method No.:** EI300
Matrix: Soils	**Detection Limits:** See Section 2.
Procedure: Inductively coupled plasma atomic emission spectroscopy (ICPAES) Model ARL 3520	**Accuracy and Precision:** See Section 3.1.
	Linear Working Range: See Section 2.
Effective Date: 01/03/89 to 10/01/91	**Author:** Janet D. Morgan

SAFETY NOTE: Before beginning this procedure, read all of the Material Safety Data Sheets for the chemicals listed in Sec. 7. Read Sec. 4.3 of the EM-9 Safety Manual for information on personal protective clothing and equipment.

1. Principle of Method

1.1. A representative 0.25-g sample is digested in hydrofluoric (HF) and nitric acids.

2. Limits of Detection and Linear Working Range

2.1. The following table lists 2 σ limits of detection and linear working range concentrations (LWRC). Detection limits, sensitivity, and LWRC of the metals will vary with the matrices and model of spectrometer.

Analyte	Limit of Detection (μg/g)	LWRC (μg/g)
Ba	0.2	16.0-1600

3. Accuracy and Precision

3.1. Accuracy and precision have not been tabulated.

Determination of Barium								
Sample 1			Sample 2			Sample 3		
00.00549			00.00596			00.00576		
TV	MRV	RSD	TV	MRV	RSD	TV	MRV	RSD
414	400.5	6.4	966	1077	6.8	409	393	5.4

TV = True value.
MRV = Mean reported value.
RSD = Relative standard deviation.

4. Interferences

4.1. Soils can contain diverse matrix types, each of which may present its own analytical challenge. Spiked samples and any relevant standard reference materials should be processed to aid in determining interferences along with performing analytical scans and using "λ", a table of ICP lines and potential interferences.

4.2. The high amounts of sulfur present in most soil samples will form barium sulfate, resulting in low Ba recoveries. For this reason, hydrofluoric acid is required in this procedure.

4.3. Particulates in the digestate that may clog the nebulizer should be removed by filtration.

4.4. Physical interferences are effects associated with the sample nebulization and transport processes. Changes in viscosity and surface tension can cause significant inaccuracies, especially in samples containing high dissolved solids or high acid concentrations. These interferences can be reduced by diluting the sample and using a peristaltic pump.

4.5. Chemical interferences include molecular compound formation, ionization effects, and solute vaporization effects. Normally, these effects are not significant with the ICP technique. If observed, they can be minimized by careful selection of operating conditions (incident power, observation position, etc.), by acid matrix matching, and by using an internal standard. Chemical interferences are highly dependent on matrix type and the specific analyte.

4.6. Spectral interferences are caused by: (1) overlap of a spectral line from another element, (2) unresolved overlap of molecular band spectra, (3) background contribution from continuous or recombination phenomena, and (4) stray light from the line emission of high-concentration elements.

4.6.1. Spectral overlap can be compensated for by computer-correcting the raw data after monitoring and measuring the interfering element. Unresolved overlap requires selection of an alternate wavelength. Background contribution and stray light can usually be compensated for by a background correction adjacent to the analyte line.

4.6.2. The interference effects must be evaluated for each instrument, because the intensities will vary with operating conditions, power, viewing height, argon flow rate, etc.

5. Collection and Storage of Samples

5.1. All samples must be collected using a sampling plan that addresses the considerations discussed in Chapter Nine of Environmental Protection Agency Laboratory Manual, Volume II, September 1986.

5.2. All sample containers must be prewashed with detergents, acids, and Type II water. Plastic and glass containers are both suitable. See Chapter Three, Section 3.1.3, in the Environmental Protection Agency Laboratory Manual, Volume 1A, November 1986 for further information.

5.3. Nonaqueous samples must be refrigerated upon receipt and analyzed as soon as possible.

6. Apparatus

6.1. Teflon beakers: 250-mL.

6.2. Teflon covers.

6.3. Nalgene filter apparatus with 0.45-μm pore size.

6.4. Hot plate.

6.5. ICPAES. Model ARL 3520.

6.6. Falcon 2059 polypropylene tube with cap, 15-mL.

6.7. Gilson autosampler with carrousel.

6.8. Rabbit peristaltic pump.

6.9. Radio-frequency generator.

7. Reagents

NOTE: All reagents should be analyzed and monitored for impurities.

7.1. ASTM Type II Water.

7.2. Nitric acid (concentrated, low-temperature redistilled, LTRD). If the method blank is less than the method detection limit (<MDL), the acid can be used.

7.3. Hydrofluoric acid (concentrated, Ultrex pure). If the method blank is less than the MDL, the acid can be used.

7.4. Argon gas supply. Welding grade or better.

7.5. Nitric acid (3% vol/vol). Prepare from LTRD and Type II water.

7.6. Reagent blank. Composed of the reagents in the same volume as used in the processing of the samples. The reagent blank must be carried through the complete procedure and contain the same acid concentration in the final solution as the sample solution.

7.7. Standard stock solutions (1000 μg/mL). For the analytes of interest, purchased from a traceable source.

7.8. Two types of quality control (QC) samples are required. One is an aqueous QC used to check the validity of the standard curve and the other, a soil QC, is taken through the digestion to check the validity of the digestion process.

7.9. Spike solution A (125 mg/L Ba standard). Prepare from the standard stock solution.

8. Calibration and Standards

NOTE: Standards are prepared from a stock solution of traceable material.

8.1. Working standards (mg/L) in 3% HNO_3.

Analyte	REFBLK	STD0	STD1	STD2	STD3
Ba	0.0	0.0	0.2	2.0	20.0

CONTROLLED

9. Procedure

9.1. Sample digestion.

9.1.1. Mix the sample thoroughly to achieve homogeneity. For each digestion procedure, weigh 0.25 g sample to the nearest 0.01 g and transfer to a Teflon beaker. Include a reagent blank and 10% duplicate and spike samples. Add 2 mL of spike solution A to the spike sample, which will be diluted to a final volume of 50 mL and a final concentration of 5 mg/L Ba.

9.1.2. Add 2 mL of HF and mix the slurry. Heat the sample to approximately 95°C and take to near dryness. Allow the sample to cool. Add 5.0 mL of concentrated HNO_3, and take to near dryness.

9.1.3. After the sample has cooled, add approximately 20 mL of 3% HNO_3 and reflux for 30 min. Cool the beaker.

9.1.4. Transfer the sample to a Nalgene filter unit and filter to a final volume of 50 mL.

9.1.5. The diluted sample has an acid concentration of approximately 3% (vol/vol) HNO_3 and is ready for analysis.

9.2. Instrument operation.

9.2.1. The analyst must be familiar with the ICPAES software in order to operate the instrument. Refer to the instrument manual.

9.2.2. Follow the instructions provided by the instrument's manufacturer.

9.2.3. Allow the instrument to become thermally stable before beginning the calibration (at least 30 min).

9.2.4. Close the optical gate to profile the instrument.

9.2.5. The optical gate will remain open for the rest of the operation.

9.2.6. Using the program procedure **BATOT**, scan any new matrices to determine the necessity and measuring position for background corrections or other interferences.

9.2.7. Set up the autosampler for further analysis.

9.2.8. Data can be captured using Microsoft Excel.

9.2.9. Transfer the standards and samples to Falcon tubes.

9.2.10. Use **CAL** to run all working standards and produce calibration curves for all elements.

9.2.11. Due to the complexity of the matrices, no internal standard is used and duplicates and spikes are employed.

9.2.12. Set up a sequence file with a calibration blank, a high standard, a quality control sample, and 10% duplicate and spike samples. Include a calibration blank and a QC sample at 10% intervals. If dilutions were performed, apply the appropriate factors to the samples at this time.

9.2.13. Concentration values for the standard and QC sample should not deviate from the actual value by more than 10%. If they do, re-calibration may be necessary.

9.2.14. Flush the system with 3% HNO_3 before the analysis of each sample.

9.2.15. If the analyte concentration is greater than the highest standard, reanalyze after making the appropriate dilution.

9.2.16. Transfer data to Microsoft Excel for calculations.

9.2.17. See Table I for instrument log.

10. Calculations

10.1. Perform all reagent blank corrections and percent recovery calculations using EXCEL Window software. Report results in $\mu g/g$.

10.2. The duplicate matrix spike sample recovery should be within ± 20% of the actual value. Calculate percent spike recoveries as follows:

$$\%Rec = \frac{100 \times \left(d3 - \left(\frac{d1 + d2}{2}\right)\right)}{Y},$$

where d1 = value first duplicate (mg/L), no spike,
d2 = value second duplicate (mg/L), no spike,
d3 = value of replicates and spikes (mg/L), and
Y = concentration of spike added (mg/L).

CONTROLLED

11. Source Materials

11.1. *United States Environmental Protection Agency Test Methods for Evaluating Solid Waste.* Chapter 9, Vol. II Field Manual, 3rd Ed. (Office of Solid Waste and Emergency Response, Washington, DC, 1986).

11.2. *ARL Handbook*, No. AA80770, Vol. 4.1. May 1984.

TABLE I. INSTRUMENT LOG	
Rf Generator Readings	Value
Incident power	1.2 kW
Reflected power	<1 W
Plate current (< 0.65 amp)	0.8 A
P.A. filament voltage (7.1 - 7.9 v)	7.0 V
P.A. voltage (< 4800 v)	3600 V
P.A. grid current (<0.4 amp)	0.16 A
Coolant argon meter reading	28 psi
Plasma argon meter reading	34 psi
Nebulizer argon meter reading	0.44 psi
Nebulizer uptake rate	3 mL/min
Gilson peristaltic pump setting	650
MHDS Nebulizer	

TABLE II. CONDITION TABLE USED "ICPJM"

COND HVPS NAME	FLUSH STAND/ TIME SOURCE	PRE-INT TIME	INTEG TIME	PRE-INT COND	INTEG COND	FATIGUE LAMP	ATTEN-UATORS
ICP4	30	30	3.00000	0	0	00	0000000
1000	11						
ICPSAM	0	20	5.00000	0	0	00	0000000
1000	11						
ICPSJW	0	0	10.0000	0	0	00	0000000
1000	11						
ISCOR	0	5	5.00000	0	0	00	0000000
1000	00						
I	0	0	2.00000	0	0	00	0000000
1000	11						
ICPCON	0	45	2.50000	0	0	00	0000000

CONTROLLED

TABLE II. CONDITION TABLE USED "ICPJM" (cont)

COND HVPS NAME	FLUSH STAND/ TIME SOURCE	PRE-INT TIME	INTEG TIME	PRE-INT COND	INTEG COND	FATIGUE LAMP	ATTEN-UATORS
1000	11						
ICPJM	30	30	5.00000	0	0	00	0000000
1000	11						
ICP4EL	30	30	5.00000	0	0	00	0000000
1000	11						

DETERMINATION OF TRACE ELEMENTS IN WATERS AND WASTES -ICPMS

Analtye: Dissolved and/or total recoverable elements	**Method No.:** EI360
Matrix: Ground, surface, and drinking water, wastewaters, sludges, solid waste samples.	
Procedure: Trace element concentrations are determined by ICPMS following sample pretreatment.	
Effective Date: 11/01/95	**Author:** Martin Koby

SAFETY NOTE: Before beginning this procedure, read all of the material safety data sheets for the chemicals listed in Sec. 6. Analytical plasma sources emit radiofrequency radiation in addition to intense UV radiation. Read Sec. 4.3 of the Environmental Chemistry Safety Manual for information on personal protective clothing and equipment. Read Source Material for proper waste disposal practices.

1. Principle of Method

1.1. This method provides procedures for determination of dissolved elements in ground waters, surface waters, and drinking water. It may also be used for determination of total recoverable element concentrations in these waters as well as wastewaters, sludges, soils, and solid waste samples.

1.2. Dissolved elements are determined after suitable filtration and acid preservation. Acid digestion procedures are required prior to determination of total recoverable elements. In order to reduce potential interferences, dissolved solids should not exceed 0.2% (w/v) (Sec. 4.3).

1.3. This method is routinely applicable to the following elements:

Element	Chemical Abstract Services Registry Numbers (CASRN)
Aluminum (Al)	7429-90-5
Antimony (Sb)	7440-36-0
Arsenic (As)	7440-38-2

Element	Chemical Abstract Services Registry Numbers (CASRN)
Barium (Ba)	7440-39-3
Beryllium (Be)	7440-41-7
Cadmium (Cd)	7440-43-9
Chromium (Cr)	7440-47-3
Cobalt (Co)	7440-48-4
Copper (Cu)	7440-50-8
Lead (Pb)	7439-92-1
Manganese (Mn)	7439-96-5
Molybdenum (Mo)	7439-98-7
Nickel (Ni)	7440-02-0
Selenium (Se)	7782-49-2
Silver (Ag)	7440-22-4
Thallium (Tl)	7440-28-0
Thorium (Th)	7440-29-1
Uranium (U)	7440-61-1
Vanadium (V)	7440-62-2
Zinc (Zn)	7440-66-6

Estimated instrument detection limits (IDLS) for these elements are listed in Table I. These are intended as a guide to instrumental limits typical of a system. optimized for multielement determinations and employing commercial instrumentation and pneumatic nebulization sample introduction. However. actual method detection limits (MDLS) and linear working ranges will be dependent on the sample matrix, instrumentation and selected operating conditions.

1.4. This method is suitable for the determination of silver in aqueous samples containing concentrations up to 0.1 mg/L. For the analysis of wastewater samples containing higher concentrations of silver, succeeding smaller volumes of well mixed sample aliquots must be prepared until the analysis solution contains < 0.1 mg/L silver.

1.5. This method should be used by analysts experienced in the use of inductively coupled plasma mass spectrometry (ICPMS), the interpretation of spectral and matrix interferences and procedures for their correction. A minimum of six months experience with commercial instrumentation is recommended.

2. Summary of Method

2.1. Sample material in solution is introduced by pneumatic nebulization into a radiofrequency plasma where energy transfer processes cause desolvation, atomization, and ionization. Resultant ions are extracted from the plasma through a differentially pumped vacuum interface and separated on the basis of their mass-to-charge ratio (m/z) by a quadruple mass spectrometer. Ions transmitted through the quadruple are registered by a suitable detector and the ion abundance information is processed by a data handling system. Interferences relating to this technique must be recognized and corrected for (Sec. 4). such corrections must include compensation for isobaric elemental interferences and interferences from polyatomic ions derived from the plasma gas, reagents, and matrix. Instrumental drift as well as suppressions or enhancement of instrument response caused by the sample matrix must be corrected for by the use of internal standardization.

3. Definitions

3.1. Dissolved - Material that will pass through a 0.45 μm membrane filter assembly, prior to sample acidification.

3.2. Total recoverable - The concentration of analyte determined on an unfiltered sample following treatment with hot dilute mineral acid.

3.3. Instrument detection limit (IDL) - The concentration equivalent of the analyte signal, which is equal to three times the standard deviation of the blank signal at the selected analytical masses.

3.4. Method detection limit (MDL) - The minimum concentration of an analyte that can be identified, measured and reported with 99% confidence that the analyte concentration is greater than zero.

3.5. Linear dynamic range (LDR) - The concentration range over which the analytical working curve (response) remains linear.

3.6. Laboratory reagent blank (LRB) - Typically referred to as the preparation blank, consists of an aliquot of reagent water that is treated exactly as a sample including exposure to all labware, equipment, solvents, reagents, and internal standards that are used with other samples. The LRB is used to determine if method analytes or

other interferences are present in the laboratory environment, the reagents, or apparatus.

3.7. Calibration blank - A volume of ASTM type I water acidified with the same acid matrix as is present in the calibration standards.

3.8. Internal standard - Pure analyte(s) added to a solution in known amount(s) and used to measure the relative responses of other method analytes that are components of the same solution. The internal standard must be an analyte that is not a sample component.

3.9. Stock standard solution - A concentrated solution containing one or more analytes prepared in the laboratory using assayed reference compounds or purchased from a reputable commercial vendor.

3.10. Calibration standard (CAL) - A solution prepared from the stock standard solution(s) which is used to calibrate the instrument response with respect to analyte concentration.

3.11. Calibration check standard - referred to as an initial calibration verification (ICV) standard or a continuing calibration verification (CCV) standard depending upon when it is analyzed during the course of an automated acquisition sequence. Analyte concentrations in this solution are typically at the mid-point of the calibration range.

3.12. Tuning solution - A solution which is used to determine acceptable instrument performance prior to calibration and sample analyses.

3.13. Laboratory fortified blank (LFB) - Also known as a blank spike, is an aliquot of reagent water to which known quantities of the method analytes are added in the laboratory. The LFB is analyzed exactly like a sample, and its purpose is to determine whether method performance is within accepted control limits.

3.14. Laboratory fortified sample matrix (LFM) - Also known as a matrix spike, is an aliquot of an environmental sample to which known quantities of the method analytes are added in the laboratory. The LFM is analyzed exactly like a sample, and its purpose is to determine whether the sample matrix contributes bias to the analytical results. The background concentrations of the analytes in the sample matrix must be determined in a separate aliquot and the measured values in the LFM corrected for the concentrations found.

3.15. Quality control sample (QCS) - A solution containing known concentrations of method analytes which is used to fortify an aliquot of LRB matrix. The QCS is

obtained from a source external to the laboratory and different than the stock calibration solution. The QCS may be either blind (unknown to the analyst) or open and is used to assess laboratory performance.

3.16. Laboratory Control Standard (LCS) - A standard reference material containing known concentrations of method analyte(s) of similar matrix as the samples being analyzed. The LCS matrix may be an oil, soil, or water.

3.17. ASTM Type I water - Defined as having a minimum electrical resistivity of 16.67 megohm-cm at 25°C.

4. Interferences

4.1. Several interference sources may cause inaccuracies in the determination of trace elements by ICPMS. These are:

4.1. Isobaric elemental interferences in ICPMS are caused by isotopes of different elements forming singly or doubly charged atomic ions with the same nominal mass-to-charge ratio (m/z) as the analyte of interest that cannot be resolved by the mass spectrometer. All elements determined by this method have, at a minimum, one isotope free of isobaric elemental interference. However, it may not be desirable to select an isotope solely because it is free from isobaric interference. The analyst must determine if a selected isotope will provide adequate response for a given instrument, sample matrix, and analytical conditions. When analytical isotopes having higher natural abundances are selected in order to achieve greater sensitivity, it is possible that an isobaric interference may occur. All data obtained under such conditions must be corrected by measuring the signal from another isotope of the interfering element and subtracting the appropriate signal ratio from the isotope of interest.

4.2. Isobaric polyatomic ion interferences are caused by ions consisting of more than one atom which have the same nominal mass-to-charge ratio as the isotope of interest, and which cannot be resolved by the mass spectrometer. These ions are commonly formed in the plasma or interface system from support gasses or sample components. Some of the common molecular interferences are listed in Table II together with the elements affected. The degree to which polyatomic ion interferences are present is largely dependent on sample matrix and the chosen instrument conditions. Such interferences may be avoided through the selection of alternative analytical isotopes while instrument operating parameters, specifically gas flows and sample delivery rate, can be chosen such that formation of molecular ions is minimized.

4.3. Physical interferences are associated with the physical processes that govern the transport of sample into the plasma, sample conversion processes in the plasma, and the transmission of ions through the sampling interface. High levels of dissolved solids can deposit on the nebulizer tip of a pneumatic nebulizer and on the interface sampling and/or skimmer cones thus reducing the orifice size and ion transmission. Total dissolved solid levels below 0.2% (2,000 mg/L) have been recommended to minimize solid deposition. Changes in matrix composition can cause significant signal suppression or enhancement relative to the response for calibration standards. Internal standardization may be effectively used to compensate for physical interference effects. The chosen internal standard ideally should have similar analytical behavior as the analyte being determined so that the two elements are similarly affected by matrix changes.

4.4. Memory interferences result when elemental isotopes from a previously acquired sample contribute to the signal intensity measured for a new sample. This can occur when there are large concentration differences between samples or standards which are analyzed sequentially. Sample deposition on the sampler and skimmer cones, sample introduction glassware and transmission tubing, and the type of nebulizer used can affect the extent of the memory interferences which are observed. Memory interference effects can be significantly reduced by using a suitably long rinse time between samples; generally, 140 to 160 s. Memory interferences can be assessed within an analytical run by using a minimum of three replicate integrations for data acquisition. If the integrated signal intensity is observed to decrease consecutively, the analyst should consider the possibility of a memory effect and take appropriate action.

5. Apparatus and Materials

5.1. Inductively coupled plasma-mass spectrometer.

5.1.1. A system capable of scanning the mass range 5–250 amu with a minimum resolution capability of 1 amu peak width at 5% peak height. The instrument may be fitted with a conventional or extended dynamic range detection system.

5.1.2. A data system capable of correcting for isobaric interferences and the application of internal standardization is required.

5.1.3. A mass-flow controller for the nebulizer argon gas supply is required to ensure stable aerosol formation. A variable-speed peristaltic pump is required for solution delivery to the nebulizer.

5.1.4. Argon gas supply: high-purity grade (99.99%).

5.1.5. Operating conditions - will be variable because of the diversity of instrument hardware and software available. Operating conditions will also depend on specific data quality objectives, sample matrix complexity, and the elements to be determined. In order to ensure optimum performance, it is the responsibility of the analyst to perform routine maintenance on an appropriate schedule.

5.2. Labware

5.2.1 Glassware - includes volumetric flasks, graduated cylinders, funnels and centrifuge tubes, and assorted volumetric pipettes.

5.2.2. Storage bottles - assorted capacities, Teflon and polyethylene.

5.2.3. Air displacement pipettes: Digital pipette system(s) capable of delivering volumes from 10–2000 L with an assortment of high quality disposable pipette tips.

5.2.4. Centrifuge tubes: conical, polyethylene, 15 and 50 mL, with closures.

5.2.5. Balance: analytical, capable of accurately weighing to 0.01 mg.

5.2.6. Ultracentrifuge

6. Reagents

6.1. Owing to the high sensitivity of ICPMS, high purity reagents should be used whenever possible. Acids used in the preparation of standards and for sample processing must be of high purity. Suitable acids are available from a number of commercial sources. Nitric acid is preferred for ICPMS to minimize damage to the interface and to minimize isobaric molecular-ion interferences. Several polyatomic ion interferences result when hydrochloric acid is used, however, it should be noted that HCl (1% v/v) is required to maintain stability in solutions containing antimony and silver at concentrations above 300 μg/L. If HCl is added as a stabilizer, then corrections for the chloride molecular-ion interferences must be applied to all data generated.

6.1.1. Nitric acid, concentrated, high purity

6.1.2. Nitric acid, 1%, add 200 mL conc. HNO_3 to 20 L ASTM type I water

6.1.3. Hydrochloric acid, concentrated, high purity

6.1.4. Dilute hydrochloric acid, prepared as needed by diluting an appropriate volume of conc. HCl with ASTM type I water.

6.2. Reagent water. For all sample preparation, dilutions, and standard preparation, ASTM type I water is required (sect. 3.16.). Suitable water may be prepared by passing pre-purified water through a mixed bed of anion and cation exchange resins.

6.3. Primary stock standard solutions. These are typically purchased from a reputable commercial source (i.e. Spex Industries, Inorganic Ventures, NIST) in 100 mL volumes of single element standards at concentrations of 1000 mg/L or 10000 mg/L.

6.4. Mixed multielement stock calibration standard solutions. Combine and dilute an appropriate volume of each analyte primary standard such that a 1.0 mg/L stock solution is obtained.

Example: 100 mL of a 1.0 mg/L stock calibration solution containing antimony, thallium, lead, and uranium is desired. Each primary standard is at a concentration of 1000 mg/L. Using an air displacement pipette, and proper technique, dispense 100 L of each standard into a 100 mL volumetric flask containing 50 mL of 1% (v/v) HNO_3. Dilute to volume with 1% HNO_3.

Care must be taken when preparing mixed standards to ensure that the elements are compatible and stable. Transfer the mixed standard solutions to freshly acid-cleaned FEP fluorocarbon bottles for storage. Fresh mixed standards must be prepared every six months, or as needed, with the realization that concentrations can change on aging.

6.4.1. Working calibration standards. Fresh multielement calibration standards are prepared daily. Dilute each multielement stock standard to concentration levels appropriate to the operating range of each instrument using 1% HNO_3. The element concentrations in the calibration standards should be sufficiently high to produce good precision and to accurately define the slope of the response curve. Add the internal standard mix to each calibration standard and blank in the same proportion as is done for the samples.

6.5. Mixed internal standard stock solution, 20 mg/L. In 1% HNO_3 dilute and combine the following single element stock standards as necessary: scandium, yttrium, rhodium, indium, terbium, holmium, lutetium, bismuth. For each stock standard at a concentration of 1000 mg/L, dilute 2.0 mL to 100 mL 1% HNO_3, store in a Teflon bottle. For an internal standard concentration of 100 g/L, add this mixed

solution to all blanks, calibration standards, and samples at the rate of 50 L to 10.0 mL (samples) and 250 L to 50.0 mL (standards).

6.6. Blanks. Three types of blanks are required for this method. The calibration blank is used to establish the analytical calibration curve, the laboratory reagent blank is used to assess possible contamination resulting from the sample preparation procedure and to assess spectral background, the rinse blank is used to flush the inlet system between all samples and standards.

6.6.1. The calibration blank consists of 1% HNO_3 (v/v) in reagent water containing the selected concentrations of internal standards.

6.6.2. The reagent blank must be carried through the complete procedure and contain the same acid concentration in the final solution as the sample solutions used for analysis.

6.6.3. The rinse blank consists of 1-2% HNO_3 (v/v) in reagent water. Prepare a sufficient quantity to flush the system between standards and samples.

6.7. The tuning solution is used for hardware tuning and mass calibration prior to analysis. The solution is prepared by mixing appropriate stock standards in 1% nitric acid such that performance across the entire mass range can be assessed. The elements chosen are largely user selectable but may include: beryllium, magnesium, chromium, indium, barium, lead, and uranium. The suggested elements were chosen because they offer evaluation of isotopic abundances (most are poly-isotopic), resolution, abundance sensitivity, detector response, mass calibration, oxide prevalence, and mass bias effects across the mass range of 9-238 amu.

6.8. The instrument check standard (Sec. 3.11) is prepared by the analyst by combining compatible elements at concentrations equivalent to the midpoint of their respective calibration ranges. The check standard is analyzed immediately after the calibration standards (ICV) and after every ten samples (CCV) during the course of an automated analysis.

NOTE: this solution must be prepared from stock standards independent of those used for instrument calibration. An independent standard is defined as a standard composed of the analytes from a source different from those used in the standards for instrument calibration.

6.9. Quality control sample (QCS). The QCS may be either an open QC sample or LFB and contains analyte(s) at known concentrations. These mixtures may be obtained through several means: 1.) prepared within the laboratory in a similar

manner as the instrument check standard (sec. 6.8), 2.) purchased from a commercial source (Spex, Environmental Resource Associates, NIST), or 3.) submitted as part of the analytical request via the QA/DM group. The QCS are treated as environmental samples and are subject to the same pretreatment and analytical procedures (sec. 3.14). Results obtained for open QCS are used primarily to assess laboratory performance and, secondarily, serve as an indicator of analytical variance (uncertainty).

6.10. Laboratory Control Sample (LCS) is similar to a QCS in that it is an independent reference material containing known analyte concentrations. The LCS may be purchased from a commercial source or prepared in the laboratory by fortifying Type I water with appropriate amounts of target analyte(s). Laboratory control samples must be of a similar matrix as the type of samples being analyzed; e.g. filters, soils, oils, or aqueous. The LCS is treated as an environmental sample and is subject to the same pretreatment and analytical procedures. One LCS is analyzed with each digestion batch or every 20 samples, whichever is more frequent.

7. Sample Collection, Preservation, and Handling

7.1. Prior to sample collection, consideration should be given to the type of data required so that appropriate preservation and pretreatment steps can be taken. Filtration, acid preservation, etc., should be performed at the time of sample collection or as soon thereafter as practically possible.

7.2. For the determination of <u>dissolved elements</u>, the sample should be filtered through a 0.45 m membrane filter. Use a portion of the sample to rinse the filter assembly, discard and then collect the required volume of filtrate. Acidify the filtrate to pH<2 with 1:1 nitric acid immediately following filtration.

7.3. For the determination of <u>total recoverable elements</u> in aqueous samples, acidify to pH<2 with 1:1 nitric acid at the time of collection (typically 3 mL of 1:1 HNO_3 per liter of sample is sufficient). The sample should not be filtered prior to analysis.

7.4. Solid samples usually require no preservation other than storage at 4°C.

8. Procedure

8.1. Prior to analysis by ICPMS all samples must undergo some level of pretreatment: either filtration and acidification or a more aggressive digestion process. How the samples are to be treated is largely dependent on sample matrix and data objectives. Sample preparation procedures for trace metal determination(s) are described in detail by the following CST analytical procedures:

8.1.1. WI680 Trace Metal Digestion - Drinking, Surface Water, and NPDES Effluents

8.1.2. WI685 Preparation of Aqueous Samples for Spectrochemical Analysis - GFAAS and ICPMS.

8.1.3. WI691 Preparation of Sediment, Sludge, and Soil for Spectrochemical Analysis - GFAAS and ICPMS.

8.2. Initiate appropriate operating configuration of the instrument and data system. In general, the analyst should follow the instructions provided by the instrument manufacturer. Allow at least 30 min for the instrument to equilibrate prior to analyzing samples. During this time, prepare calibration standards and dilute sample digests by an appropriate amount, add internal standard mix to all solutions to be introduced to the instrument.

8.2.1. Initiate proper operating and acquisition configuration for quantitative analysis. A minimum of three replicate integrations are **required** for data acquisition; however, five replicate integrations are suggested for improved precision. Use the average of the integrations for instrument calibration and data reporting. Establish or edit sample table (analytical assignment).

8.2.2. Prior to calibration, perform mass calibration and resolution checks by aspirating the tuning solution. Evaluate resolution at low mass with magnesium isotopes (m/z 24, 25, 26) and at high mass with lead isotopes (m/z 206, 207, 208). Adjust mass spectrometer resolution to achieve a peak width of 0.75–1.0 amu at 5% peak height. Adjust mass calibration if it has shifted by more than 0.1 amu from unit mass.

8.2.3. Demonstration and documentation of acceptable initial calibration is required before any samples are analyzed. The instrument must be calibrated for the analytes to be determined using the calibration blank and calibration standard(s) prepared at one or more concentration levels. Flush the system with the rinse blank between each standard solution.

8.2.4. The rinse blank should be used to flush the sample introduction system between solution changes for blanks, standards, and samples. Allow sufficient rinse time to remove traces of the previous sample; a minimum of 1 min is suggested. Some elements (such as Li, Hg, W, and Mo) require extended flushing times which need to be determined for each instrumental system. In order for equilibrium to be established, solutions should be aspirated for a minimum of 30 s prior to the acquisition of data.

8.2.5. Immediately after the calibration has been established, the calibration must be verified and documented for every analyte by the analysis of a calibration verification solution (Sec. 6.8). When measurements exceed ± 10% of the accepted value the analysis must be terminated, the problem corrected, the instrument recalibrated, and the calibration verified. Any samples analyzed under an out-of-control calibration must be reanalyzed. Analyze the instrument check standard and the calibration blank at a frequency of at least once every 10 analytical samples.

NOTE: values obtained for the check standard typically agree within ± 10% of the accepted value with the exception being antimony.

8.3. Internal standardization must be used in all quantitative analyses to correct for instrument drift and physical interferences. A list of acceptable internal standards is provided in Table III. For full mass range scans, a minimum of three internal standards must be used provided the instrument operating software supports multiple internal standards. Internal standards should be added to all samples, standards and blanks in a like manner such that equivalent concentration levels are achieved (provided they are not naturally present as a sample constituent). A concentration of 100 μg/L of each internal standard is recommended.

8.3.1. It is **recommended** that sample digests be diluted prior to the initial analytical run. Dilute aqueous matrices 1:1 and soil/sludge matrices 1:10 with 1% HNO_3 before the addition of internal standard(s).

8.3.2. Dilute, add internal standard, and reanalyze samples that are more concentrated than the linear range for an analyte (or species needed for a correction) or measure an alternate less-abundant isotope.

8.3.3. Calculations. The quantitative values shall be reported in units of μg/L for aqueous samples and g/g for solid samples. If dilutions were performed, the appropriate corrections must be applied to the sample values.

8.3.4. Results for solids may be reported on a dry-weight or "as is" basis dependent upon matrix type. For example, results for soils and sludges are routinely reported as dry weight whereas miscellaneous solids are reported as received. Moisture correction is typically determined as follows:

8.3.4.1. An aliquot, ca. 20 g, of well mixed soil sample is transferred to a tared beaker and the wet weight is recorded.

8.3.4.2. The soil is dried for at least 12 h in a convection oven set at 105°C.

8.3.4.3. After drying, the sample is removed from the oven and placed in a desiccator and then reweighed to determine moisture loss on drying.

8.3.4.4. The dried sample is then transferred to a 50 mL polyethylene centrifuge tube, an inert impact ball is added, and the sample is mechanically agitated to achieve a uniform particle size.

8.3.4.5. Aliquots of the dried and ground soil sample are then digested with hot mineral acid prior to instrumental analysis. No moisture correction is applied, or needed, when samples are treated in this manner.

8.3.5 Optionally, a separate sample aliquot may be dried for percent solids determination. This correction factor is then applied to the digested sample aliquot.

9. Quality Control

9.1. Each laboratory using this method is required to operate a formal quality control (QC) program. This function is coordinated through CST-3 QA/DM section. The minimum requirements of this program consist of an initial demonstration of laboratory capability, and the analysis of laboratory reagent blanks, fortified blanks, and QC samples as a continuing check on performance. Historic performance records that define the quality of the data generated are maintained by the CST-3 QA/DM section. Run time performance data is filed with analytical raw data packages.

9.2. **Method detection limits (MDL)** may be estimated by multiplying by three the standard deviations obtained on three non consecutive days from the analysis of seven blanks (Type I water plus reagents) which are processed through the entire analytical method. Each measurement is performed as though it were a separate analytical sample and all calculations are performed as defined in the method. The MDL is reported as a concentration using the appropriate units. The MDL is a dynamic value which is subject to change from any number of variables, e.g. aging instrument components, matrix complexity, reagent purity, and environmental conditions. MDLs are determined annually or when significant instrument repairs/modifications have been made, whichever is more frequent.

9.2.1. **Continuing MDL verification** - once the MDL has been estimated, it will be determined annually by using reagent water fortified at a concentration of two to five times the estimated detection limit. To determine MDL values, seven replicates of the fortified reagent water are processed through

the entire analytical method. All calculations defined in the method are performed and the concentrations are recorded.

The MDL is then calculated as:

$$MDL = t \times s$$

where t = 3.14, (the student's value for a 99% confidence level and a standard deviation estimate with n-1 degrees of freedom for seven replicates, and

s = standard deviation of the replicate analyses.

9.2.2. **Reporting limits** used differ from the MDL and are based upon the concept of Minimum Level; defined as the concentration of analyte in a sample equivalent to the concentration of the lowest point on the calibration curve. There are several reasons for this practice:

9.2.2.1. The lowest point on the calibration curve is measurable, can be quantified, and the uncertainty (error) associated with this measurement can be determined.

9.2.2.2. Owing to the sensitivity of ICPMS, the lowest point on the calibration curve is less than the minimum quantification levels (MQLs) prescribed by EPA, Region 6, for toxic pollutant analysis. Refer to Table IV.

9.2.2.3. A true detection limit implies the lowest concentration that a given instrument can record (typically a signal to background ratio of 2:1). With respect to an MDL, it is a concentration that is considered statistically significant from the measurement of a reagent blank. Unfortunately, environmental samples typically are more complex, chemically, than reagent water. Consequently, the MDL for a specific analyte may vary dramatically dependent upon sample matrix, as has been well documented.

9.2.3. Linear calibration ranges are primarily detector limited but can also be significantly influenced by system operating software limitations. The upper limit of the linear calibration range should be established for each analyte by determining the signal response from a calibration blank and a minimum of three concentration standards, one of which is near the upper limit of the linear range.

9.3 Assessing laboratory performance

9.3.1. Laboratory reagent blanks are analyzed at a frequency of one LRB for each preparation batch not to exceed 20 samples per batch. This data is used to assess laboratory introduced contamination and to characterize spectral contribution from the reagents used. If analyte is present in the reagent blank at a concentration of **one to ten times the reporting limit** (Sec. 9.2.2), the analyst must perform the following:

9.3.1.1. Determine if the contamination is an isolated occurrence limited to the reagent blank. This can be done by evaluating analyte recovery from the LCS relative to its certified concentration. A high bias, equivalent to that in the LRB, would indicate introduced contamination.

9.3.1.2. Determine the concentration of the affected analytes in the environmental samples.

9.3.1.2. If a bias equivalent to the blank concentration is confirmed, the reporting limit and uncertainties are adjusted to reflect this condition.

NOTE: an anomalous condition such as this must be described in adequate detail through a case narrative to the customer.

9.3.2. **If the reagent blank contains more than ten times the reporting limit for a given analyte the digestion batch must be digested a second time and reanalyzed.**

9.3.3. A laboratory control sample (LCS), whether purchased or made in the laboratory by fortifying Type I water, is analyzed at a frequency of one for each digestion batch of 20 or fewer environmental samples. The appropriate LCS is chosen such that it is matrix matched to the samples being analyzed. Analyte recoveries must agree within 15% of the true value. Alternatively, control limits can be periodically recalculated for a given LCS after analyte recoveries have been compiled for 2-30 determinations. This can be done as follows:

Upper control limit = $X + 3\sigma$
Lower control limit = $X - 3\sigma$

where X = percent mean recovery, and
σ = standard deviation of mean recovery.

In instances where control limits are exceeded, a description of the problem is included in the case narrative supplied to the customer.

9.4. Assessing analyte recovery

9.4.1. Matrix spikes are analyzed at a frequency of one for every digestion batch not to exceed 20 samples. This is done by spiking a representative aliquot of a customer sample with known concentrations of each analyte prior to digestion. It is recommended that spike levels fall near the mid-point of the calibration curve for a given analyte.

9.4.2. Calculate the percent recovery of each analyte, corrected for the background concentrations measured in the unfortified sample, and compare these values to the control limits established in section 9.3.3., e.g. ±15% of the true value.

9.4.3. If spike recovery of any analyte falls outside the acceptance range and all other laboratory performance checks are acceptable, the recovery problem is judged to be matrix related, not system related. Results for outliers should be explained in the case narrative to the customer.

9.5. Assessing reproducibility

9.5.1. One sample is analyzed in duplicate for every matrix in a batch at a frequency of one matrix duplicate for every 20 samples. The level of precision indicated by duplicate analyses, in conjunction with LCS recoveries, is used as an estimate of analytical uncertainty.

9.5.2. The relative percent difference (RPD) between duplicate determinations is calculated as follows:

$$\mathbf{RPD} = \frac{|D_1 - D_2|}{(D_1 + D_2)/2} \times 100$$

where RPD = relative percent difference,
D_1 = first sample value (original), and
D_2 = second sample value (duplicate).

An advisory limit of 20% RPD should not be exceeded provided analyte concentrations are greater than 100 times the method detection limit. If this criteria is not met, sample heterogeneity should be suspected and described to the submitter in the case narrative.

9.6. Assessing instrument response stability.

9.6.1. Internal standard response is monitored throughout the sample set being analyzed and recorded in the analytical log book. This information may be used to detect problems caused by mass dependent drift, errors incurred in adding the internal standards, and background contribution from the individual sample. Additionally, physical characteristics of any given sample have the potential to affect nebulization, plasma conditions, and ion transport through the sampling interface. **The absolute response of any one internal standard should not deviate by more than 60–125% of the original response of the calibration blank.**

9.6.2. If internal standard response deviates by more than the specified amount the following action should be taken:

9.6.2.1. If signal suppression is indicated by a low internal standard response, dilute the sample 1:10, add internal standard, and reanalyze.

9.6.2.2. If signal enhancement is indicated by a high internal standard response, the analyst may proceed as above (a.) or an alternative element may be employed as an internal standard.

9.6.2.3. An abrupt enhancement or suppression that remains consistent over a given time period usually indicates that a change in operating conditions has occurred. At a minimum, the sample transmission tubing, torch, and cones should be inspected for signs of ware, deposition, or blockage. Clean or replace the necessary items, recalibrate, and reanalyze affected samples.

9.6.3. Calibration check standards, both continuing calibration samples (CCVs) and continuing calibration blanks (CCBs) are analyzed immediately after calibration and every ten samples during the course of an analytical run. These give an indication of calibration integrity, signal response stability, instrument drift, and contamination of the inlet system by matrix contaminants. Analyte concentrations in the CCV must agree within ± 10 percent of the true value while analyte concentrations in the CCB must not exceed their respective reporting limits, (Sec. 8.2.5).

9.7. Sample data evaluation.

9.7.1. Ensure all analyte concentrations are within the calibration range; dilute and reanalyze samples for any analyte exceeding the upper calibration point by more than 10%.

9.7.2. Evaluate the precision of measurements for each analyte. If an outlier is identified by performing a Q -Test for Rejection of Data, reject the outlier and recalculate the mean analyte concentration and standard deviation from the remaining integrations.

9.7.3. Evaluate the nominal mass abundance ratios for polyatomic elements for which more than one mass has been monitored. Note those having non-natural composition as this may indicate spectral interference. A qualitative survey of the sample should be performed to verify the identity of the interference. If it is necessary to reanalyze the sample, then the appropriate element equations should be employed to correct for the interfering species or an alternative interferant free isotope should be used for quantification purposes.

10. Data Reporting

10.1. Reported values are calibration blank subtracted and corrected for dilution.

10.2. Unless specifically instructed otherwise, results are reported in units of μg/L for aqueous samples and g/g for solid matrices.

10.3. Results are reported to two significant figures for concentrations 10 μg/L and three significant figures for concentrations 10 μg/L.

10.4. Reported analytical uncertainty is based upon the **greater** of the following:

10.4.1. The minimum value, equivalent to the concentration of the lowest calibration standard (corrected for dilution).

10.4.2. Three times the standard deviation (3) of the integrated values.

10.4.3. The relative percent difference (RPD) calculated for duplicate analysis.

10.5. Original sample data and copies of all calibration data and QC samples are filed together.

11. Source Material

11.1. A. L. Gray and A. R. Date, *Analyst* 108 1033 (1983).

11.2. R. S. Houk et al. *Anal Chem.* 52 2283 (1980).

11.3. R. S. Houk, *Anal. Chem.* 58 97A (1986).

11.4. J. J. Thompson and R. S. Houk, *Appl. Spec.* 41 801 (1987).

11.5. "OSHA Safety and Health Standards, General Industry", (29 CFR 1910), Occupational Safety and Health Administration, OSHA 2206, revised January 1976.

11.6. "Proposed OSHA Safety and Health Standards, Laboratories", Occupational Safety and Health Administration, Federal Register, July 24, 1986.

11.7. Code of Federal Regulations 40, Ch. 1, Pt. 136 Appendix B.

TABLE I. ESTIMATED INSTRUMENT DETECTION LIMITS

Element	Recommended analytical mass	Estimated IDL (μg/L)
Aluminum	27	0.05
Antimony	121	0.08
Arsenic	75	0.9
Barium	137	0.5
Beryllium	9	0.1
Cadmium	111	0.1
Chromium	52	0.07
Cobalt	59	0.03
Copper	63	0.03
Lead	206,207,208	0.08
Manganese	55	0.1
Molybdenum	98	0.1
Nickel	60	0.2
Selenium	82	5.00
Silver	107	0.05
Thallium	205	0.09
Thorium	232	0.03
Uranium	238	0.02
Vanadium	51	0.02
Zinc	66	0.20

Instrument detection limits (3σ) estimated from seven replicate integrations of the blank (1% v/v HNO_3) following calibration of the instrument with three replicate integrations of a multi-element standard. EPA Method 200.8, Revision 4.4, April 1991.

TABLE II. METHOD DETECTION LIMITS - TS SOLA		
Element	MDL -Water (μg/L)	MDL - Soil (μg/g)
Aluminum	Not Established	Not Established
Antimony	3.17	0.32
Arsenic	Not Established	Not Established
Barium	Not Established	Not Established
Beryllium	Not Established	Not Established
Cadmium	Not Established	Not Established
Chromium	Not Established	Not Established
Cobalt	Not Established	Not Established
Copper	Not Established	Not Established
Lead	1.56	0.50
Manganese	Not Established	Not Established
Molybdenum	Not Established	Not Established
Nickel	Not Established	Not Established
Selenium	Not Established	Not Established
Silver	Not Established	Not Established
Thallium	0.40	0.17
Thorium	Not Established	Not Established
Uranium	0.62	0.15
Vanadium	Not Established	Not Established
Zinc	Not Established	Not Established

Not Established as of November 30, 1995, - Trace element determinations by ICPMS using this method have been limited to antimony, thallium, lead, and uranium. Other analytical techniques have historically been used for the remaining analytes. As this situation changes IDLs and MDLs will be established for all analytes listed. Soil MDLs are based upon 3σ of the average of 21 reagent blanks; Water MDLs are based upon 3σ of 14 reagent blanks. MDLs will be updated according to the procedure described in section 9.2.1.

TABLE III. SUGGESTED INTERNAL STANDARDS AND LIMITATIONS OF USE

Internal standard	Mass	Possible limitation
^{6}Lithium	6	a
Scandium	45	polyatomic ion interference
Yttrium	89	a,b
Rhodium	103	
Indium	115	isobaric interference by Sn
Terbium	159	
Holmium	165	
Lutetium	175	
Rhenium	187	
Bismuth	209	a

a May be present in environmental samples.

b Care must be taken when using Yttrium as it may form measurable amounts of molecular oxides and hydroxides at 105 amu and 106 amu respectively.

Recommended internal standards are in bold face.

TABLE IV. MINIMUM QUANTIFICATION LEVELS (MQLs)	
Element	Required MQL (μg/L)
Antimony (Total)	60.0
Arsenic (Total)	10.0
Beryllium (Total)	5.0
Cadmium (Total)	1.0
Chromium (Total)	10.0
Copper (Total)	5.0
Lead (Total)	5.0
Nickel (Total)	40.0
Selenium (Total)	5.0
Silver (Total)	2.0
Thallium (Total)	10.0
Zinc (Total)	20.0
Aluminum	-
Barium	-
Cobalt	-
Manganese	-
Molybdenum	-
Thorium	-
Uranium	-
Vanadium	-

MQL requirements as defined by EPA Region 6.
(-) not defined.

TABLE V. SUGGESTED ANALYTICAL ISOTOPES AND ADDITIONAL MASSES TO BE MONITORED

Element	Analytical Isotope	Monitored Isotope
Aluminum	27	-
Antimony	121	123
Arsenic	75	-
Barium	138	137,136,135
Beryllium	9	-
Cadmium	114	113,112,111,110
Chromium	52	53
Cobalt	59	-
Copper	63	65
Lead	206,207,208	206,207,208
Manganese	55	-
Molybdenum	98	97,95
Nickel	60	62,58
Selenium	82	78,77
Silver	107	109
Thallium	205	203
Thorium	232	-
Uranium	238	235
Vanadium	51	-
Zinc	66	68

ANALYTICAL PROCEDURE REVIEW AND APPROVAL

Method: Determination of Trace Elements in Water and Wastes–ICPMS

Method No.: EI360 **Revision No.:** 0

Team Leader Stephen L. Dom **Date:** 2/28/96

Group Leader [illegible] **Date:** 3-6-96

QA Concurrence Margaret A. Gautier **Date:** 3-7-96

APPENDIX III
Section IIIc

Laboratory Performance Evaluation Results

C. Analytical Chemistry

1. Methodology.

a. Introduction. Most analytical chemistry services are provided by the Laboratory's EM-9 Group, which provides analytical services to the Laboratory's environmental, waste management, radiation protection, and industrial hygiene operations. EM-9 is responsible for QA for the health and environmental analytical work. EM-9 participates in the following interlaboratory QAPs:

- National Institute for Occupational Safety and Health, Proficiency Analytical Testing Program;
- Environmental Monitoring and Support Laboratory, Cincinnati (EMSL-CI) Drinking Water Program;
- EMSL-CI Water Pollution Study;
- EPA Environmental Monitoring Systems Laboratory-Las Vegas;
- Environmental Measurements Laboratory;
- NPDES; and
- DOE Beryllium Intercomparison Study.

The EM-9 Sample Management Section functions as an interface between the group and its customers. This section provides the sample collector with presampling information about sample containers, sample volumes, and sample preservation techniques. Collection of samples for chemical and radiochemical analyses follows a set procedure to ensure proper sample collection, documentation, submittal for chemical analysis, and posting of analytical results.

Before sample collection, the Sample Management Section discusses the schedule and procedures to be followed with the sample collector. The discussion includes

- number and type of samples;
- type of analyses and required limits of detection;
- proper sample containers;
- preparation of sample containers with preservative, if needed; and
- sample schedule to ensure minimum holding time so that analyses comply with EPA criteria.

After a sample is collected, it is delivered to the EM-9 Sample Management Section, where the pertinent information is entered into the EM-9 Laboratory Information Management System, and the request is given a form number. Each number, representing a single sample, is assigned to a particular station and is entered into the collector's log book. The processing of samples includes (1) validating all samples for sampling correctness and integrity, (2) scheduling and labeling all samples for analysis, (3) initiating internal COC procedures for all samples, and (4) arranging for the proper disposal of any unused portions of samples.

The request form number is entered in the collector's log book opposite sample numbers submitted, along with the date the sample was delivered to EM-9. EM-9 provides COC forms for the samples once they are received if COC did not begin in the field. The date, time, temperature (if the sample is water), and other pertinent information and remarks are entered opposite the sample number and station previously listed in the log book. The sample container is labeled with station name, sample number, date, and preservative, if added.

The analytical request form contains the following information related to ownership and the program submitted: (1) requester, i.e., sample collector; (2) program code; (3) sample owner, i.e., program manager; (4) date; and (5) total number of samples. The second part of the request form contains (1) sample number or numbers; (2) matrix, e.g., water; (3) types of analyses, i.e., specific radionuclide and/or chemical constituents; (4) technique, i.e., analytical method to be used for individual constituents; (5) analyst, i.e., chemist to perform analyses; (6) priority of sample or samples; and (7) remarks. One copy of the form goes to the collector for filing, one is kept by the Sample Management Section, and the other copies accompany the sample.

The analytical results are returned to the sample collector, who posts the data according to sample and station taken from the log book. These data sheets are included in the final report.

b. Radioactive Constituents. Environmental samples are routinely analyzed for the following radioactive constituents: gross alpha, beta, and gamma; isotopic plutonium; americium; uranium; cerium; tritium; and strontium. Detailed procedures are published in the EM-9 Analytical Methods Manual (Gautier 1986). Occasionally, other radionuclides from specific sources are determined: ^{7}Be, ^{22}Na, ^{40}K, ^{51}Cr, ^{60}Co, ^{65}Zn, ^{83}Rb, ^{106}Ru, ^{134}Cs, ^{140}Ba, ^{152}Eu, ^{154}Eu, and ^{226}Ra. All but ^{226}Ra are determined by gamma-ray spectrometry on large HPGe detectors. The requirements for detection of ^{137}Cs in drinking water were lowered to 10 pCi/L in 1992. In 1993, a detector was configured in a new chamber, shielded for lower background to meet this detection limit. This detector appeared capable of attaining the 10 pCi/L detection limit. These additional reconfigured detectors were used as needed for measurement of ^{137}Cs in many of the environmental samples analyzed for 1993. Depending on the concentration and matrix, ^{226}Ra is measured by emanation or by gamma-ray spectrometry of its ^{214}Bi decay product.

During 1992, the criteria for uranium analyses were changed to require lower detection limits and better estimates of the isotopic ratio. At that time, these requirements were achieved by development of a method of measurement by employing radiochemistry and alpha spectrometry (RAS). In 1993, a few samples needed to be analyzed by inductively-coupled plasma mass spectrometer (ICPMS) as was done in past years, but the great majority of isotopic uranium analyses were done by RAS. Kinetic phosphorimetric analysis (KPA) was used for samples where direct total uranium determination was required. This very sensitive method replaced the delayed neutron activation method, use of which was curtailed by shutdown of Omega West Reactor where the analysis had been done in past years.

c. Stable Constituents. A number of analytical methods are used for various stable isotopes. The choice of method is based on many criteria, including the operational state of the instruments, time limitations, expected concentrations in samples, quantity of sample available, sample media, and EPA regulations. Instrumental techniques available include atomic absorption, ion chromatography, color spectrophotometry (manual and automated), potentiometry, ICPMS, and inductively coupled plasma atomic emission spectrometry. Standard chemical methods are also used for many of the common water quality tests. Atomic absorption capabilities include flame, furnace, and cold vapor, as well as flame emission spectrophotometry. The methods used and references for determination of various chemical constituents are presented elsewhere (Gautier 1986).

d. Organic Constituents. Environmental soil and water samples are analyzed using EPA procedures outlined in EPA SW-846 (EPA 1989d) or modified procedures (Gautier 1986) that meet QA criteria outlined in Chapter 1 of SW-846, as shown in Table VIII-1. Methods used are supported by documented spike/recovery studies, method and field blanks, matrix spikes, surrogate spikes, and blind QC samples. VOCs are analyzed using Method 8260, SW-846. Tables D-24 and D-25 list VOCs on the target list for water and soil samples, respectively. Semivolatile organic compounds (SVOCs) are analyzed using Method 8270, SW-846. Table D-26 is the target list for SVOCs in water. Soil-gas (pore-gas) monitoring is performed by collecting organic vapors on carbonaceous adsorbent traps, thermal desorption of the traps, and analysis using gas chromatography/mass spectrometry (GC/MS). Soil-gas target compounds are listed in Table D-27, and the Toxicity Characteristics Leaching Procedure (TCLP) target compounds are listed in Table D-28.

Instruments available for organic analysis include GC/flame ionization detector, GC/electron capture detector (ECD), GC/MS, high performance liquid with ultraviolet (UV) and refractive index detectors, Fourier transform infrared spectrometer, and UV/visible spectrophotometer. Sample preparation methods include Soxhlet extraction, ultrasonic extraction, continuous liquid/liquid extraction, Kuderna Danish concentration, evaporative blowdown, and gel permeation chromatography cleanup of sample extracts.

Organic mixed waste analyses are performed for samples containing up to 300 nCi/g (solids/sludges) or 300 nCi/L (solutions) of alpha, beta, or gamma activity. Higher level samples are analyzed on a case-by-case basis. New methods are being developed for routine analysis of mixed waste greater than 300 nCi/g (or 300 nCi/L).

Table VIII-1. Method Summary (Organic Compounds)

Analyte	Matrix	Method	Technique[d]
VOCs	Air	—	GC/MS
	Soil	8260	PAT/GC/MS
	Water	8260	PAT/GC/MS
TCLP[a]	Soil	1311; 8080; 8150; 8260; 8270	GC/ECD
PCBs[b]	Water	8080	GC/ECD
	Soil	8080	GC/ECD
	Oil	IH 320[c]	GC/ECD
SVOCs	Soil and waste	8270	GC/MS

[a]Toxicity characteristics leaching procedure (TCLP)
[b]Polychlorinated biphenyl (PCBs)
[c]Industrial hygiene (IH).
[d]Gas chromatography (GC), purge and trap (PAT), electron capture detection (ECD), and mass spectrometry (MS).

2. Quality Evaluation Program.

a. Introduction. Control samples are analyzed in conjunction with the normal analytical chemistry workload. Such samples consist of several general types: calibration standards, reagent blanks, process blanks, matrix blanks, duplicates, spikes, and reference materials. Analysis of control samples fills two needs in analytical work: (1) it provides QC over analytical procedures so that problems that might occur can be identified and corrected, and (2) data obtained from analysis of control samples permit evaluation of the capabilities of a particular analytical technique to determine a given element or constituent under a certain set of circumstances.

Blind QC samples are numbered to resemble unknown samples in a set. The concentrations of the analytes of interest are not revealed until after the data have been formally reported. These samples are submitted to the laboratory at regular intervals and are analyzed in association with other samples; that is, they are not handled as a unique set of samples. Up to 10% of stable constituent, organic, and selected radioactive constituent analyses are run as QC samples using the materials described above. A detailed description of EM-9's QAP and a complete listing of results have been published annually since 1976 (Gautier 1993).

b. Radioactive Constituents. In addition to samples prepared internally, QC and QA samples for radioactive constituents are provided by outside agencies. The Quality Assurance Division of the Environmental Monitoring Systems Laboratory (EPA, Las Vegas) provides water, milk, and air filter samples for analysis of gross alpha, gross beta, tritium, ^{40}K, ^{60}Co, uranium, ^{65}Zn, ^{90}Sr, ^{106}Ru, ^{131}I, ^{134}Cs, ^{137}Cs, ^{226}Ra, and $^{239,240}Pu$ as part of an ongoing laboratory performance evaluation program. NIST provides several soil and sediment standard reference materials (SRMs) for environmental radioactivity. These SRMs are certified for ^{60}Co, ^{90}Sr, ^{137}Cs, ^{226}Ra, ^{238}Pu, ^{239}Pu, ^{241}Am, and several other nuclides. The DOE's Environmental Measurements Laboratory also provides QA samples.

Soil, rock, and ore samples obtained from the Canadian Geological Survey (CGS) are used for QA of uranium and thorium determinations in silicate matrices. EM-9's own in-house standards are prepared by adding known quantities of liquid SRMs for radioactivity, prepared by NIST to blank matrix materials.

c. Stable Constituents. QA for the stable constituent analysis program is maintained through analyses of certified or well-characterized environmental materials. NIST has a large set of silicate, water, and biological SRMs. EPA distributes standards for minerals and other trace constituents in water . Rock and soil reference materials have been obtained from the CGS and the United States Geological Survey. Details of this program have been published elsewhere (Gautier 1993). Stock solutions of inorganic analytes are prepared and spiked on blank matrices by EM-9's Quality Assurance Section.

The analytical QC program for a specific batch of samples is a combination of many factors. These include the calibration of the instrument and/or reagents, recovery for SRMs, method blanks, duplicate precision, spike sample recovery, and run time instrumental QC (continuing calibration standards and blanks).

d. Organic Constituents. Soil samples are analyzed for VOCs, SVOCs, pesticides, and herbicides for compliance work done under RCRA. Certified matrix-based reference materials are not available for these analyses, so stock solutions of the analytes are prepared and spiked directly on blank soil by the Quality Assurance Section. Because homogeneity of the sample cannot be ensured, the entire sample is analyzed. VOCs are analyzed by GC/MS and are spiked in the microgram-per-kilogram range.

The majority of water samples submitted during 1993 were environmental compliance samples analyzed for pesticides, herbicides, VOCs, SVOCs, and polychlorinated biphenyl (PCBs). Methods were developed and refined for in-house preparation of QC samples for VOCs and SVOCs in water.

Oil samples are received for the analysis of PCBs and organic solvents. QC samples for PCBs are prepared by diluting EPA standards or by preparing standards in hexane from the neat analyte. In the United States, the only PCBs that have been found in transformers have been PCBs 1242, 1254, and 1260. Samples submitted for analysis have contained only these PCBs, so only these have been used to spike QC samples. Vacuum pump oil was chosen for the oil base blank.

3. Data Handling of Radiochemical Samples.

Measurements of radiochemical samples require that analytical or instrumental backgrounds be subtracted to obtain net values. Thus, net values are sometimes obtained that are lower than the minimum detection limit of the analytical technique. Consequently, individual measurements can result in values of positive or negative numbers. Although a negative value does not represent a physical reality, a valid long-term average of many measurements can be obtained only if the very small and negative values are included in the population calculations (Gilbert 1975).

For individual measurements, uncertainties are reported as one standard deviation. The standard deviation is determined from the propagated sources of analytical error.

Standard deviations for the station and group (off-site regional, off-site perimeter, and on-site) means are calculated using the following equation:

$$s = \sqrt{\frac{\sum_{i=1}^{N}\left(\bar{c} - c_i\right)^2}{(N-1)}},$$

where

ci = sample i,

$\bar{c}$ = mean of samples from a given station or group, and

N = number of samples comprising a station or group.

This value is reported as the uncertainty for the station and group means.

4. Indicators of Analytical Accuracy and Precision.

Accuracy is the degree of difference between average test results and true results when the latter are known or assumed. Precision is the degree of mutual agreement among replicate measurements (frequently assessed by calculating the standard deviation of a set of data points). Accuracy and precision are evaluated from results of

analyses of reference materials. These results (r) are normalized to the known quality in the reference material to permit comparison among references of a similar matrix containing different concentrations of the analyte:

$$r = \frac{\text{Reported quantity}}{\text{Known quantity}}.$$

A mean value R for all normalized analyses of a given type is calculated as follows for a given matrix type (N is total number of analytical determinations):

$$R = \frac{\sum_i r_i}{N},$$

Standard deviations of R are calculated assuming a normal distribution of the population of analytical determinations (N):

$$s = \sqrt{\frac{\sum_i (R - r_i)^2}{(N-1)}}.$$

These calculated values are presented as the EM-9 "Ratio ± Std Dev" in Tables D-29 to D-31. The mean value of R is a measure of the accuracy of a procedure. Values of R greater than unity indicate a positive bias in the analysis; values less than unity indicate a negative bias. The standard deviation is a measure of precision. Precision is a function of the concentration of analyte; that is, as the absolute concentration approaches the limit of detection, precision deteriorates. For instance, the precision for some determinations is quite good because many standards approach the limits of detection of a measurement. We address this issue by calculating a new QA parameter:

$$\left|\overline{X}_E - \overline{X}_C\right|,$$

where X_E is the experimentally determined mean concentration based on N measurements, and X_C is the certified or consensus mean concentration. The total standard deviation, S_T, of X_E - X_C is given by

$$Sr = \sqrt{\left(U_E^2 / N\right) + S_C^2},$$

where U_E is the standard deviation of a single experimentally determined measurement, and S_c is the standard deviation of the certified or consensus mean elemental concentration.

5. Analytical Control Conditions.

Analyses are considered under control if the absolute value of the difference between our result (X_E) and the certified or consensus mean (X_C) is within the propagated standard deviation of the experimental uncertainty (U_E)

and of the certified mean (S_C). N is equal to the number of measurements on a sample, and in this case, is equal to 1. This concept, an adaptation of Dixon and Massey (Dixon 1969), is expressed in the following equation to include the experimental uncertainty:

$$z = \frac{\left|\overline{X}_E - \overline{X}_C\right|}{\sqrt{\left(U_E^2 / N\right) + S_C^2}}$$

The test statistics used in this document are based on 5% and 0.2% levels of significance. The respective critical regions are defined for values of z between 2 and 3. Data having a calculated z value ≤2 are accepted as in control at the 5% level of significance. Data that have a calculated z value >2 and ≤3 are considered at the warning level, or the 0.2% level of significance. Data with a z value >3 are considered out of control. These test statistics are also incorporated in the QACHECK computer program.

The percentage of the tests for each parameter where X_E - X_C fell within ≤2 S_T (under control), between 2S_T and 3S_T (warning level), or outside >3S_T (out of control) is shown in Tables D-29 to D-31. A summary of the overall state of statistical control for analytical work done by EM-9 is provided in Table VIII-2.

With the exception of bulk materials, more than 90% of the organic analyses are within <2 propogated standard deviations of the certified/consensus mean values (under control). Inorganic data has a lower percentage of analyses within control limits, but the data is comparable to that obtained during 1992. Trace levels of radiochemical constituents in biological materials and soils still provide more analytical difficulty as illustrated by the lower level of overall analytical control. Other radiochemical measurements are unchanged since 1992. Areas with <90% of the analyses being under control were the focus of increased quality assurance/quality control efforts during 1993. Data on analytical detection limits are given in Table D-32.

Table VIII-3 summarizes recovery information on organic surrogate compounds required for use in the EPA-Contract Laboratory Program protocol. Table VIII-4 summarizes EM-9's overall record of meeting EPA SW-846-specified holding times for samples during 1993. The data include all samples for which holding times were missed and the customer elected to either resample or accept the data as usable. Table D-33 reports the incidence of false positive results for blank QC samples and false negative results for spiked QC samples at the 95% confidence level.

Table VIII-2. Overall Summary of EM-9 Quality Assurance Tests for 1993

Analysis	Number of Quality Control (QC) Tests	Under Control <2σ (%)	Warning 2Ý3σ (%)	Out of Control >3σ (%)
Stable Elements				
Biologicals	1	100	—	—
Bulk Materials	9	22	11	66
Filters	16	75	19	6
Soils	231	84	10	6
Water	4,703	94	3	3
Radiochemical Elements				
Biologicals	60	87	8	5
Filters	406	97	2	1
Soils	226	78	12	10
Water	1,208	96	3	1
Organic Compounds				
Bulk Materials	353	86	6	8
Charcoal Tube	924	97	—	3
Filters	56	92	4	4
Soils	1,608	97	1	2
Water	1,906	94	2	4

Table VIII-3. Summary of EM-9 Organic Surrogate Compounds as Required for Compliance with EPA SW-846 Criteria for 1993

Matrix Analysis	CAS[a] #	EPA SW-846 Range Low	EPA SW-846 Range High	Number of Surrogates In Range	Number of Surrogates Total	% In Range	% of Samples Run With Surrogate
Soil							
2-Fluorophenol	204	25	121	258	271.0	95.2	100.0
Phenol d6	205	24	113	265	271.0	97.8	100.0
Nitrobenzene d5	206	23	120	268	271.0	98.9	100.0
2-Fluorobiphenyl	207	30	115	268	271.0	98.9	100.0
2,4,6-Tribromophenol	208	19	122	258	271.0	95.2	100.0
p-Terphenyl d14	209	18	137	264	271.0	97.4	100.0
1,2-Dichloroethane d4	201	70	121	276	342.0	80.7	100.0
Toluene d8	202	81	117	337	342.0	98.5	100.0
4-Bromofluorobenzene	203	74	121	251	342.0	73.4	100.0
Water							
2-Fluorophenol	204	21	100	109	126.0	86.5	100.0
Phenol d6	205	10	94	115	126.0	91.3	100.0
Nitrobenzene d5	206	35	114	114	126.0	90.5	100.0
2-Fluorobiphenyl	207	43	116	109	126.0	86.5	100.0
2,4,6-Tribromophenol	208	10	123	119	126.0	94.4	100.0
p-Terphenyl d14	209	33	141	103	126.0	81.7	100.0
1,2-Dichloroethane d4	201	76	114	176	207.0	85.0	99.5
Toluene d8	202	88	110	207	207.0	100.0	99.5
4-Bromofluorobenzene	203	86	115	126	207.0	60.9	99.5

[a]Chemical abstract service.

Table VIII-4. EM-9 EPA SW-846 Holding Time Summary for 1993

Organic Analysis Type	Number Meeting EPA Criteria	Total Number Performed	% Within EPA Criteria
Extraction holding times			
Volatiles in soils	347	360	96.4
Volatiles in waters	132	154	85.7
Semivolatiles in soils	215	217	99.1
Semivolatiles in waters	132	138	95.7
PCBs in soils	352	362	97.2
PCBs in waters	68	84	81.0
Instrument analysis holding times			
Volatiles in soils	360	360	100.0
Volatiles in waters	154	154	100.0
Semivolatiles in soils	217	217	100.0
Semivolatiles in waters	138	138	100.0
PCBs in soils	298	362	82.3
PCBs in waters	77	84	91.7

APPENDIX C

ANALYTICAL CHEMISTRY METHODOLOGY

Most analytical chemistry is provided by the Health and Environmental Chemistry Group (HSE-9). Overflow work is contracted to several commercial laboratories.

A. Radioactive Constituents

Environmental samples are routinely analyzed for the following radioactive constituents: gross alpha, beta, and gamma; isotopic plutonium; americium; uranium; cesium; tritium; and strontium. Detailed procedures have been published in this appendix in previous years.[C1,C2] Occasionally other radionuclides from specific sources are determined: ^{7}Be, ^{22}Na, ^{40}K, ^{51}Cr, ^{60}Co, ^{65}Zn, ^{83}Rb, ^{106}Ru, ^{134}Cs, ^{140}Ba, ^{152}Eu, ^{154}Eu, and ^{226}Ra. All but ^{226}Ra are determined by gamma-ray spectrometry on large Ge(Li) detectors. Depending on the concentration and matrix, ^{226}Ra is measured by emanation[C3] or by gamma-ray spectrometry of its ^{214}Bi decay product.[C4] Uranium isotopic ratios ($^{235}U/^{238}U$) are measured by neutron activation analysis where precisions of ±5% are adequate.[C5] More-precise work requires mass spectrometry. Uranium isotopic ratios are readily determined in environmental materials with precisions of 1–2% relative standard deviation (RSD) at considerably reduced cost relative to neutron activation, by inductively coupled plasma mass spectrometry (ICPMS).

B. Stable Constituents

A number of analytical methods are used for various stable isotopes. The choice of method is based on many criteria, including the operational state of the instruments, time limitations, expected concentrations in samples, quantity of sample available, sample matrix, and Environmental Protection Agency (EPA) regulations.

Instrumental techniques available include neutron activation, atomic absorption, ion chromatography, color spectrophotometry (manual and automated), potentiometry, combustion analysis, ICPMS, and inductively coupled plasma atomic emission spectrometry (ICPAES). Standard chemical methods are also used for many of the common water-quality tests. Atomic absorption capabilities include flame, furnace, cold vapor, and hydride generation, as well as flame-emission spectrophotometry. The methods used and references for determination of various chemical constituents are summarized in Table C-1 (Refs. C6–C70). In 1986 the EPA Region VI administration granted HSE-9 limited approval for alternative test procedures for uranium in drinking water (delayed neutron assay) and for flow injection (without distillation) for chloride in drinking water and waste water. EPA approval for other modified methods is actively being sought. HSE-9 is participating in the EPA-sponsored study to evaluate ICPMS for acceptance as an EPA-approved methodology.

C. Organic Constituents

Environmental water samples are analyzed by EPA or modified EPA methodology. Methods in use are supported by the use of documented spike/recovery studies, method and field blanks, matrix spikes, surrogate spikes, and blind quality-control samples. EPA procedures are modified in order to take advantage of recent advances in analytical separation and analysis techniques. Volatile organics are analyzed using a modified form of EPA method 524. Our current target list of volatile compounds totals 70. Water samples are analyzed by purge-and-trap gas chromatography/mass spectrometry (PAT). Soils are analyzed using heated PAT. Semivolatile organics are analyzed by EPA method 625 using EPA-CLP (Contract Laboratory Program) protocol. Manual and automated methods have been developed using neutron activation to screen oil samples for potential polychlorinated biphenyl (PCB) contamination via total chlorine determination. Volatiles trapped on charcoal are analyzed using a carbon disulfide desorption/gas chromatography/mass spectrometry method.

Instrumentation available for organic analysis includes gas chromatographs with a variety of detector systems, including mass spectrometry, flame ionization,

Table C-1. Analytical Methods for Various Stable Constituents

Technique	Stable Constituents Measured	References
Standard chemical methods	Total alkalinity, hardness, SO_3^{-2}, SO_4^{-2}, TDS, conductivity, COD	C6, C65
Color spectrophotometry	NO_3^-, PO_4^{-3}, Si, Pb, Ti, B	C6, C65
Neutron activation:		
Instrumental thermal	Al, Sb, As, Ba, Br, Ca, Ce, Cs, Cl, Cr, Co, Dy, Eu, Au, Hf, In, I, Fe, La, Lu, Mg, Mn, K, Rb, Sm, Sc, Se, Na, Sr, S, Ta, Tb, Th, Ti, W, V, Yb, Zn	C7, C12–C15, C65
Instrumental epithermal	Al, Sb, As, Ba, Br, Cs, Cr, F, Ga, Au, In, I, La, Mg, Mn, Mo, Ni, K, Sm, Se, Si, Na, Sr, Th, Ti, W, U, Zn, Zr	C7, C9, C16–C21, C65
Thermal neutron capture gamma ray	Al, B, Ca, Cd, C, Gd, H, Fe, Mg, N, K, Si, Na, S, Ti	C7, C22–C29, C65
Radiochemical	Sb, As, Cu, Au, Ir, Hg, Mo, Os, Pd, Pt, Ru, Se, Ag, Te, Th, W, U, La, Ce, Pr, Nd, Sm, Eu, Gd, Tb, Dy, Ho, Er, Yb, Lu, $^{235}U/^{238}U$,	C5–C7, C30–C38, C51, C65
Delayed neutron assay	U	C7, C8, C10, C11, C39, C40, C65
Atomic absorption	Sb, As, Ba, Be, Bi, Cd, Ca, Cr, Co, Cu, Ga, In, Fe, Pb, Li, Mg, Mn, Hg, Mo, Ni, K, Se, Ag, Na, Sr, Te, Tl, Sn, Ti, V, Zn, Al	C6, C41–C48, C52–C54, C65
Inductively coupled plasma mass spectrometry	Sb, As, Ba, Be, B, Bi, Cd, Cr, Co, Cu, Ga, In, Pb, Li, Mn, Hg, Mo, Ni, Se, Br, Ag, Sr, Te, Th, Sn, Ti, V, Zn, U, I, Tl, La,Ce, Pr, Nd, Sm, Eu, Gd, Tb, Dy, Ho, Er, Tb, Lu	C65
Ion chromatograpy	F^-, Cl^-, Br^-, NO_2^-, NO_3^-, SO_4^{-2}, PO_4^{-3}, Na^+, K^+, Mg^{+2}, Ca^{+2}	C49, C65
Potentiometric	F^-, NH_4^+, pH, Br^-, Cl_2 (total), Cl_2 (free)	C50, C55, C65
Combustion	C, N, H, S, total organic carbon	C29, C62, C63, C65
Corrosivity	—	C56, C57
Ignitability (flash point)	—	C56, C58
Automated colorimetry	CN^-, NH_4^+, PO_4^{-3}, NO_3^-, NO_2^-, Cl^-, COD, TKN, Si, B, SO_4^{-2}, Cr^{+6}	C6, C59, C60–C62, C65
Inductively coupled plasma atomic emission spectrometry	Al, Ag,As, B, Be, Ba, Cd, Co, Cu, Ca, Cr, Fe, K, Li, Mg, Mn, Mo, Na, Ni, P, Pb, Re, S, Sb, Se, Si, Th, Tl, V, Y, Zn	C66–C68

and electron capture. Also available is a high-pressure liquid chromatograph equipped with a ultra-violet (UV) and refractive index detection system, an infrared spectrophotometer, and a UV/visible spectrophotometer for colorimetric analyses. Methods used for sample preparation include solvent extraction, soxhlet extraction, liquid/liquid extraction, kuderna danish concentration, column separation, head space, and purge and trap. The methods used for analyses in 1988 along with references are shown in Table C-2. Tables C-3 through C-7 show compounds determined by these methods and representative detection limits.

D. Analytical Chemistry Quality Evaluation Program

1. Introduction. Control samples are analyzed in conjunction with the normal analytical chemistry workload. Such samples consist of several general types: calibration standards, reagent blanks, process blanks, matrix blanks, duplicates, spikes, and reference materials. Analysis of control samples fills two needs in the analytical work. First, it provides quality control over analytical procedures so that problems that might occur can be identified and corrected. Second, data obtained from analysis of control samples permit evaluation of the capabilities of a particular analytical technique to determine a given element or constituent under a certain set of circumstances. The former function is analytical quality control; the latter is quality assurance.

No attempt is made to conceal the identity of control samples from the analyst, although the concentration of the analytes of interest is not revealed. These samples are submitted to the laboratory at regular intervals and are analyzed in association with other samples; that is, they are not handled as a unique set of samples. We feel it would be difficult for analysts to give the samples special attention, even if they were so inclined. We endeavor to run at least 10% of stable constituent, organic, and selected radioactive constituent analyses as quality assurance samples using the materials described above. A detailed description of our quality assurance program and a complete listing of our annual results are published annually.[C71–C81]

2. Radioactive Constituents. Quality control and quality assurance samples for radioactive constituents are obtained from outside agencies as well as prepared internally. The Quality Assurance Division of the Environmental Monitoring Systems Laboratory (EPA, Las Vegas) provides water, foodstuffs, and air-filter samples for analysis of gross alpha, gross beta, ^{3}H, ^{40}K, ^{60}Co, ^{65}Zn, ^{90}Sr, ^{106}Ru, ^{131}I, ^{134}Cs, ^{137}Cs, ^{226}Ra, and $^{239,240}Pu$ as part of an ongoing laboratory intercomparison program. The National Institute of Standards and Technology (NIST, formerly the National Bureau of Standards) provides several soil and sediment Standard Reference Materials (SRMs) for environmental radioactivity. These SRMs are certified for ^{60}Co, ^{90}Sr, ^{137}Cs, ^{226}Ra, ^{238}Pu, $^{239,240}Pu$, ^{241}Am, and several other nuclides. The DOE's Environmental Measurements Laboratory also provides quality assurance samples.

Soil, rock, and ore samples obtained from the Canadian Geological Survey (CGS) are used for quality assurance of uranium and thorium determinations in silicate matrices. Our own in-house standards are prepared by adding known quantities of liquid NIST radioactivity SRMs to blank matrix materials.

3. Stable Constituents. Quality assurance for the stable constituent analysis program is maintained by analysis of certified or well-characterized environmental materials. The NIST has a large set of silicate, water, and biological SRMs. The EPA distributes mineral analysis and trace analysis water standards. Rock and soil reference materials have been obtained from the CGS and the United States Geological Survey (USGS). Details of this program have also been published elsewhere.[C81]

The analytical quality control program for a specific batch of samples is the combination of many factors. These include the "fit of the calibration," instrument drift, calibration of the instrument and/or reagents, recovery for SRMs, and precision of results. In addition, there is a program for evaluation of the quality of results for an individual water sample.[C82] These individual water-sample-quality ratios are the sum of the milliequivalent (meq) cations to the sum of meq anions, the meq hardness of the sum of meq Ca^{+2} and Mg^{+2}, the observed total dissolved solids (TDS) to the sum of solids, and the observed conductivity to the sum of contributing conductivities, as well as the two ratios

Table C-2. Method Summary (Organics)

Analyte	Matrix	Method	Technique[a]	Reference
Volatiles	Air	—	GC/MS	C65
	Soil	CLP[b]/524	PAT/GC/MS	C64–C66
	Water	524	PAT/GC/MS	C64
EP[c] toxicity	Soil	1310, 8080 8150	GC/ECD	C66
PCBs	Water	606	GC/ECD	C64
	Soil	8080	GC/ECD	C66
	Oil	IH 320	GC/ECD	C65
Semivolatiles	Soil and waste	625	GC/MS	C69,C70

[a]Gas chromatography (GC), purge and trap (PAT), electron capture detection (ECD), and mass spectrometry (MS).

[b]Contract Laboratory Program (CLP).

[c]Extraction procedure (EP).

obtained by multiplying (0.01) × (conductivity) and dividing by the meq cations and the meq anions.

4. Organic Constituents. Soil samples are received for the analysis of volatile and semivolatile organic compounds (VOCs and SVOCs), pesticides, and herbicides for compliance work done under the Resource Conservation and Recovery Act (RCRA). Certified matrix-based reference materials were not available for these analyses, so stock solutions of the analytes were prepared and spiked directly on blank soil by the quality assurance section. Since homogeneity of the sample could not be ensured, the entire sample was analyzed. The VOCs are analyzed by gas chromatography/mass spectrometry. In the last 12 months, the detection limit for these compounds has decreased by a factor of 100 because of a change in the technique used to introduce the samples into the gas chromatograph. This was accomplished by using a heated purged-trap methodology instead of purge-and-trap performed at ambient temperatures. The in-house quality control samples are now spiked in the microgram-per-kilogram range to reflect this change in detection limits.

The majority of water samples submitted during 1988 were environmental compliance samples for the analysis of pesticides, herbicides, semivolatile and volatile organic compounds, and PCBs. Methods were developed and refined for in-house preparation of quality-control samples for volatile and semivolatile organic compounds in water.

Oil samples were received for the analysis of PCBs and organic solvents. The majority of these oils await disposal by the Waste Management Group, HSE-7, and include oil from decommissioned transformers. The remaining oil samples were environmental or industrial hygiene samples taken from areas of possible contamination.

Quality-control samples for PCBs were prepared by diluting EPA standards or by preparing standards in hexane from the neat analyte. In the United States, the only PCBs that have been found in transformers have been PCBs 1242, 1254, and 1260. Samples submitted for analysis have contained only these PCBs, so they have been used to spike quality-control samples. Vacuum pump oil was chosen for the oil base blank after an experiment with various brands of motor oil showed excessive matrix interferences.

Table C-3. Volatiles Determined in Water by Purge and Trap

Compound	CAS #	Representative Limit of Quantification (µg/L)
Chloromethane	74-87-3	10
Vinyl chloride	75-01-4	10
Bromomethane	74-83-9	2
Chloroethane	75-00-3	10
Acetone	67-64-1	2
Trichlorofluoromethane	75-69-4	2
1,1-Dichloroethene	75-35-4	2
Methylene chloride	75-09-2	2
Carbon disulfide	75-15-0	10
t-1,2-Dichloroethene	156-60-5	2
1,1-Dichloroethane	75-34-3	2
c-1,2-Dichloroethene	156-59-2	2
Bromochloromethane	74-97-5	2
Chloroform	67-66-3	2
1,2-Dichloroethane	107-06-2	2
1,1-Dichloropropene	563-58-6	10
Vinyl acetate	108-05-4	20
2-Butanone (MEK)	78-93-3	10
2,2-Dichloropropane	590-20-7	2
1,1,1-Trichloroethane	71-55-6	2
Carbon tetrachloride	56-23-5	2
Benzene	71-43-2	2
1,2-Dichloropropane	78-87-5	2
Trichloroethene	79-01-6	2
Dibromomethane	74-95-3	2
Bromodichloromethane	75-27-4	2
t-1,3-Dichloropropene	1006-10-26	2
c-1,3-Dichloropropene	1006-10-15	20
1,1,2-Trichloroethane	79-00-5	2
1,3-Dichloropropane	142-28-9	2
Chlorodibromomethane	124-48-1	2
Bromoform	75-25-2	10
4-Methyl-2-pentanone (MIK)	10-81-1	10
Toluene	108-88-3	2
2-Hexanone	59-17-86	80
1,2-Dibromomethane	74-95-3	2
Tetrachloroethene	127-18-4	2
Chlorobenzene	108-90-7	2
1,1,1,2-Tetrachloroethane	630-20-6	2
1-Chlorohexane	544-10-5	2
Ethylbenzene	100-41-4	2
m,p-Xylene (total)	108-38-3 + 106-42-3	2
o-Xylene	95-47-6	2
Styrene	100-42-5	2
1,1,2,2-Tetrachloroethane	79-34-5	10
1,2,3-Trichloropropane	96-18-4	2

Table C-3 (Cont)

Compound	CAS #	Representative Limit of Quantification (µg/L)
Isopropylbenzene	98-82-8	2
Bromobenzene	108-86-1	2
n-Propylbenzene	103-65-1	2
2-Chlorotoluene	95-49-8	2
4-Chlorotoluene	106-43-4	2
1,3,5-Trimethylbenzene	108-67-8	2
tert-Butylbenzene	98-06-6	2
1,2,4-Trimethylbenzene	95-63-6	2
sec-Butylbenzene	135-98-8	2
1,3-Dichlorobenzene	541-73-1	2
1,4-Dichlorobenzene	106-46-7	2
p-Isopropyltoluene	99-87-6	2
1,2-Dichlorobenzene	95-50-1	2
n-Butylbenzene	104-51-8	2
1,2-Dibromo-3-chloropropane	96-12-8	10
1,2,4-Trichlorobenzene	120-82-1	2
Naphthalene	91-20-3	2
1,2,3-Trichlorobenzene	87-61-6	10
Hexachlorobutadiene	87-68-3	2

Column: Supelco SPB-5 60 m × 0.25 mm × 1.0 µm. Limits of detection estimated by minimum signal required to yield identifiable mass spectral scan.

5. Indicators of Accuracy and Precision. Accuracy is the degree of difference between average test results and true results, when the latter are known or assumed. Precision is the degree of mutual agreement among replicate measurements (frequently assessed by calculating the standard deviation of a set of data points). Accuracy and precision are evaluated from results of analysis of reference materials. These results are normalized to the known quality in the reference material to permit comparison among reference materials of similar matrix containing different concentrations of the analyte:

$$r = \frac{\text{Reported quantity}}{\text{Known quantity}} .$$

A mean value R for all normalized analyses of a given type is calculated as follows for a given matrix type (N is total number of analytical determinations):

$$R = \frac{\Sigma_i r_i}{N} .$$

The standard deviation(s) of R is calculated assuming a normal distribution of the population of analytical determinations (N):

$$s = \sqrt{\frac{\Sigma_i (R - r_i)^2}{(N-1)}} .$$

These calculated values are presented as the HSE-9 "Ratio ± Std Dev" in Tables C-8 through C-20. The mean value of R is a measure of the accuracy of a procedure. Values of R greater than unity indicate a positive bias in the analysis; values less than unity, a negative bias.

The standard deviation is a measure of precision. Precision is a function of the concentration of analyte;

Table C-4. Volatiles Determined in Solids by SW-846 Method 8010

Compound	CAS #	Limit of Quantification (µg/kg)
Chloromethane	74-87-3	10
Vinyl chloride	75-01-4	2
Bromomethane	74-83-9	2
Chloroethane	75-00-3	2
Acetone	67-64-1	2
Trichlorofluoromethane	75-69-4	2
1,1-Dichloroethene	75-35-4	2
Methylene chloride	75-09-2	10
Carbon disulfide	75-15-0	2
t-1,2-Dichloroethene	156-60-5	2
1,1-Dichloroethane	75-34-3	2
c-1,2-Dichloroethene	156-59-4	2
Bromochloromethane	74-97-5	2
Chloroform	67-66-3	2
1,2-Dichloroethane	107-06-2	2
1,1-Dichloropropene	563-58-6	2
Vinyl acetate	108-05-4	10
2-Butanone (MEK)	78-93-3	10
2,2-Dichloropropane	590-20-7	10
1,1,1-Trichloroethane	71-55-6	10
Carbon tetrachloride	56-23-5	2
Benzene	71-43-2	2
1,2-Dichloropropane	78-87-5	2
Trichloroethene	79-01-6	2
Dibromomethane	74-95-3	2
Bromodichloromethane	75-27-4	2
t-1,3-Dichloropropene	1006-10-26	10
c-1,3-Dichloropropene	1006-10-15	10
1,1,2-Trichloroethane	79-00-5	2
1,3-Dichloropropane	142-28-9	2
Chlorodibromomethane	124-48-1	2
Bromoform	75-25-2	2
4-Methyl-2-pentanone (MIK)	10-81-1	10
Toluene	108-88-3	2
2-Hexanone	59-17-86	20
1,2-Dibromomethane	74-95-3	2
Tetrachloroethene	127-18-4	2
Chlorobenzene	108-90-7	2
1,1,1,2-Tetrachloroethane	630-20-6	2
1-Chlorohexane	544-10-5	2
Ethylbenzene	100-41-4	2
m,p-Xylene (total)	108-38-3 + 106-42-3	2
o-Xylene	95-47-6	2
Styrene	100-42-5	2
1,1,2,2-Tetrachloroethane	79-34-5	10
1,2,3-Trichloropropane	96-18-4	2
Isopropylbenzene	98-82-8	2

Table C-4 (Cont)

Compound	CAS #	Limit of Quantification (µg/kg)
Bromobenzene	108-86-1	2
n-Propylbenzene	103-65-1	2
2-Chlorotoluene	95-49-8	2
4-Chlorotoluene	106-43-4	2
1,3,5-Trimethylbenzene	108-67-8	2
tert-Butylbenzene	98-06-6	2
1,2,4-Trimethylbenzene	98-63-6	2
sec-Butylbenzene	135-98-8	2
1,3-Dichlorobenzene	541-73-1	2
1,4-Dichlorobenzene	106-46-7	2
p-Isopropyltoluene	99-87-6	2
1,2-Dichlorobenzene	95-50-1	2
n-Butylbenzene	104-51-8	2
1,2-Dibromo-3-chloropropane	96-12-8	2
1,2,4-Trichlorobenzene	120-82-1	2
Naphthalene	91-20-3	2
1,2,3-Trichlorobenzene	87-61-6	2
Hexachlorobutadiene	87-68-3	2

[a]Column: 60 m × 0.32 mm SPB-5 fused silica capillary, using a methanolic partition with purge and trap. Limits of quantification are calculated from the intercept of the external calibration curve using a flame-ionization detector.

that is, as the absolute concentration approaches the limit of detection, precision deteriorates. For instance, the precision for some determinations is quite large because many standards approach the limits of detection of a measurement. We address this issue by calculating a new quality assurance parameter,

$$\left|\bar{X}_E - \bar{X}_c\right| < 1.96\sqrt{(S_E)^2 + (S_c)^2}\ ,$$

where X_E and X_c are the experimentally determined and certified or consensus mean elemental concentrations, respectively. The S_E and S_c parameters are the standard deviations associated with X_E and X_c, respectively. An analysis will be considered under control when this condition is satisfied for a certain element in a given matrix. Details on this approach are presented elsewhere.[C81] The percentage of the tests for each parameter that fell within ±2 propagated-standard-deviations (under control), between ±2 and ±3 propagated-standard-deviations (warning level), or outside ±3 propagated-standard-deviations (out of control) is shown in Tables C-8 to C-20. A summary of the overall state of statistical control for analytical work done by HSE-9 is provided in Table C-21.

For most radiochemical and inorganic analyses, more than 92% are within ±2 propagated-standard-deviations of the certified/consensus mean values (under control). Trace levels of these constituents in biological materials still provide more analytical difficulty, as illustrated by the slightly lower level of overall analytical control. Although the overall control of organic analyses in bulk materials (such as oils and solvents) is quite good, we have much too high a percentage of our organic determinations in water and silicate matrixes outside the ±3 propagated-standard-deviations of the certified/consensus mean values (out of control). This area will be the focus of increased quality assurance/quality control effort.

Table C-5. Semivolatile Organics in Water

Compound	CAS #	Limit of Quantification (µg/L)
N-Nitrosodimethylamine	62-75-9	20
Aniline	62-55-3	20
Phenol	108-95-2	10
bis(-2-Chloroethyl)ether	111-44-4	10
2-Chlorophenol	95-57-8	10
1,3-Dichlorobenzene	541-73-1	10
1,4-Dichlorobenzene	106-46-7	10
Benzyl alcohol	100-51-6	10
1,2-Dichlorobenzene	95-50-1	10
2-Methylphenol	95-48-7	10
bis(2-Chloroisopropyl)ether	39638-32-9	10
4-Methylphenol	106-44-5	10
N-Nitroso-di-*n*-propylamine	621-64-7	10
Hexachloroethane	67-72-1	10
Nitrobenzene	98-95-3	10
Isophorone	78-59-1	10
2-Nitrophenol	88-75-5	10
2,4-Dimethylphenol	105-67-9	10
Benzoid acid	65-85-0	50
bis(-2-Chloroethoxy)methane	111-91-1	10
2,4-Dichlorophenol	120-83-2	10
1,2,4-Trichlorobenzene	120-82-1	10
Naphthalene	91-20-3	10
4-Chloroaniline	106-47-8	10
Hexachlorobutadiene	87-68-3	10
4-Chloro-3-methylphenol	59-50-7	10
2-Methylnaphthalene	91-57-6	10
Hexachlorocyclopentadiene	77-47-4	10
2,4,6-Trichlorophenol	88-06-2	10
2,4,5-Trichlorophenol	95-95-4	50
2-Chloronaphthalene	91-58-7	10
2-Nitroaniline	88-74-4	50
Dimethyl phthalate	131-11-3	10
Acenaphthylene	208-96-8	10
3-Nitroaniline	99-09-2	50
Acenaphthene	83-32-9	10
2,4-Dinitrophenol	51-28-5	50
4-Nitrophenol	100-02-7	50
Dibenzofuran	132-64-9	10
2,4-Dinitrotoluene	121-14-2	10
2,6-Dinitrotoluene	606-20-2	10
Diethylphthalate	84-66-2	10
4-Chlorophenyl-phenylether	7005-72-3	10
Fluorene	86-73-7	10
4-Nitroaniline	100-01-6	50

Table C-5 (Cont)

Compound	CAS #	Limit of Quantification (µg/L)
4,6-Dinitro-2-methylphenol	534-52-1	50
N-Nitrosodiphenylamine	86-30-6	10
Azobenzene	103-33-3	50
4-Bromophenyl-phenylether	101-55-3	10
Hexachlorobenzene	118-74-1	10
Pentachlorophenol	87-86-5	50
Phenanthrene	85-01-8	10
Anthracene	120-12-7	10
Di-*n*-butylphthalate	84-74-2	10
Fluoranthene	206-44-0	10
Benzidine	92-87-5	50
Pyrene	129-00-0	10
Butylbenzylphthalate	85-68-7	10
3,3′-Dichlorobenzidine	91-94-1	20
Benzo(*a*)anthracene	56-55-3	10
bis(2-Ethylhexyl)phthalate	117-81-7	10
Chrysene	218-01-9	10
Di-*n*-octyl phthalate	117-84-0	10
Benzo(*b*)fluoranthene	205-99-2	10
Benzo(*k*)fluoranthene	207-08-9	10
Benzo(*a*)pyrene	50-32-8	10
Indeno(1,2,3-*cd*)pyrene	193-39-5	10
Dibenzo(*a*,*h*)anthracene	53-70-3	10
Benzo(*g*,*h*,*i*)perylene	191-24-2	10

New instrumentation has been purchased for the analysis of volatiles, and considerable improvement has been shown in this area. Semivolatile analyses continue to pose a challenge, but new extraction methods are being developed that show promise. Additional experienced personnel have been hired for the semivolatile analysis, currently the most complex organic analysis of the environmental protocols.

The analysis of any organic on silicate materials is difficult because of the tremendous number and type of matrix complications. Our quality-control samples are matrix spikes that truly reflect what occurs in the extraction process. In addition to the blind quality-control samples, the analyst spikes samples for volatile and semivolatile analysis with a series of three to five surrogate compounds and checks for the percentage of recovery as directed by EPA guidelines. If these recoveries are out of acceptable range, corrective action is taken. Matrix spike samples are also prepared. A portion of the actual sample is spiked with target compounds, and recoveries are evaluated using EPA guidelines.

Data on analytical detection limits are given in Table C-22.

Table C-6. Volatiles Determined in Air (Pore Gas)

Compound	CAS #	Limit of Quantification (µg/tube)
Chloroform	67-66-3	1.0
1,1,1-Trichloroethane	71-56-6	1.0
Benzene	71-43-2	1.0
Carbon tetrachloride	56-23-5	1.0
Trichloroethene	79-01-6	1.0
Toluene	108-88-3	1.0
Tetrachloroethene	127-18-4	1.0
Chlorobenzene	108-90-7	1.0
Ethylbenzene	100-41-4	1.0
o-Xylene	95-47-6	1.0
m,p-Xylene (total)	108-38-3 + 106-42-3	1.0
1,2,4-Trimethylbenzene	95-63-6	1.0

Table C-7. EP Toxicity Organic Contaminants

Contaminant	Maximum Concentration (mg/L)	Representative Detection Limits (mg/L)[a]
Endrin (1,2,3,4,10,10-Hexachloro-6 7-*epoxy*-1,4,4*a*,5,6,7,8,8*a*-octahydro-1 4-*endo*, *endo*-5, 8-dimethanonaphthalene)	0.02	0.006
Lindane (α,α,β,α,α,β-Hexachlorocyclohexane, gamma isomer)	0.4	0.0002
Methoxychlor (1,1,1-Trichloro-2,2-*bis*(*p*-methoxyphenyl)ethane)	10.0	0.004
Toxaphene (technical chlorinated camphene, 67–69% chlorine)	0.5	0.020
2,4-*D* (2,4-Dichlorophenoxyacetic acid)	10.0	0.016
2,4,5-TP (Silvex) (2,4,5-Trichlorophenoxypropionic acid)	1.0	0.005

[a]Column: 30 m × 0.32-mm SPB-5 fused silica capillary. Detection limit is calculated as 4 times the gas chromatography background noise found when an electron capture detector was used.

APPENDIX C

ANALYTICAL CHEMISTRY METHODOLOGY

Most analytical chemistry services are provided by the Laboratory's Health and Environmental Chemistry Group (HSE-9). Overflow work is contracted to several commercial laboratories.

A. Radioactive Constituents

Environmental samples are routinely analyzed for the following radioactive constituents: gross alpha, beta, and gamma; isotopic plutonium; americium; uranium; cesium; tritium; and strontium. Detailed procedures have been published in this appendix in previous years.[C1,C2] Occasionally, other radionuclides from specific sources are determined: ^{7}Be, ^{22}Na, ^{40}K, ^{51}Cr, ^{60}Co, ^{65}Zn, ^{83}Rb, ^{106}Ru, ^{134}Cs, ^{140}Ba, ^{152}Eu, ^{154}Eu, and ^{226}Ra. All but ^{226}Ra are determined by gamma-ray spectrometry on large Ge(Li) detectors. Depending on the concentration and matrix, ^{226}Ra is measured by emanation[C3] or by gamma-ray spectrometry of its ^{214}Bi decay product.[C4] Uranium isotopic ratios (^{235}U/^{238}U) are measured by neutron activation analysis where precisions of ±5% are adequate.[C5] More-precise work requires mass spectrometry. Uranium isotopic ratios are readily determined in environmental materials with precisions of 1%–2% relative standard deviation (RSD), at considerably reduced cost relative to neutron activation, by inductively coupled plasma mass spectrometry (ICPMS).

B. Stable Constituents

A number of analytical methods are used for various stable isotopes. The choice of method is based on many criteria, including the operational state of the instruments, time limitations, expected concentrations in samples, quantity of sample available, sample matrix, and EPA regulations.

Instrumental techniques available include neutron activation, atomic absorption, ion chromatography, color spectrophotometry (manual and automated), potentiometry, combustion analysis, ICPMS, and inductively coupled plasma atomic emission spectrometry (ICPAES). Standard chemical methods are also used for many of the common water-quality tests. Atomic absorption capabilities include flame, furnace, cold vapor, and hydride generation, as well as flame-emission spectrophotometry. The methods used and references for determination of various chemical constituents are summarized in Table C-1 (Refs. C5–C67). In 1986, the EPA Region VI administration granted HSE-9 limited approval for alternative test procedures for uranium in drinking water (delayed neutron assay) and for chloride in drinking water and waste water (flow injection, without distillation). EPA approval for other modified methods is actively being sought. HSE-9 is participating in the EPA-sponsored study to evaluate ICPMS for acceptance as an EPA-approved methodology.

C. Organic Constituents

Environmental water samples are analyzed by EPA or modified EPA methodology. Methods used are supported by documented spike/recovery studies, method and field blanks, matrix spikes, surrogate spikes, and blind quality control samples. EPA procedures are modified to take advantage of recent advances in analytical separation and analysis techniques. Volatile organic compounds are analyzed using a modified form of EPA method 524. Our current target list of volatile compounds totals 65. Water samples are analyzed by purge-and-trap gas chromatography/mass spectrometry (PAT). Soils are analyzed using heated PAT. Semivolatile organic compounds are analyzed by EPA method 625 using EPA-CLP (Contract Laboratory Program) protocol. Manual and automated methods have been developed using neutron activation to screen oil samples for potential polychlorinated biphenyl (PCB) contamination via total chlorine determination.[C68] Volatile organics trapped on charcoal are analyzed using a carbon disulfide desorption/gas chromatography/mass spectrometry method.

Instrumentation available for organic analysis includes gas chromatographs with a variety of detector systems, including mass spectrometry, flame ionization, and electron

Table C-1. Analytical Methods for Various Stable Constituents

Technique	Stable Constituents Measured	References
Standard chemical methods	Total alkalinity, hardness, SO_3^{-2}, SO_4^{-2}, TDS (total dissolved solids), conductivity, COD (chemical oxygen demand)	C6, C64
Color spectrophotometry	NO_3^-, PO_4^{-3}, Si, Pb, Ti, B	C6, C64
Neutron activation:		
Instrumental thermal	Al, Sb, As, Ba, Br, Ca, Ce, Cs, Cl, Cr, Co, Dy, Eu, Au, Hf, In, I, Fe, La, Lu, Mg, Mn, K, Rb, Sm, Sc, Se, Na, Sr, S, Ta, Tb, Th, Ti, W, V, Yb, Zn	C7, C12–C15, C64
Instrumental epithermal	Al, Sb, As, Ba, Br, Cs, Cr, F, Ga, Au, In, I, La, Mg, Mn, Mo, Ni, K, Sm, Se, Si, Na, Sr, Th, Ti, W, U, Zn, Zr	C7, C9, C16–C21, C64
Thermal neutron capture gamma ray	Al, B, Ca, Cd, C, Gd, H, Fe, Mg, N, K, Si, Na, S, Ti	C7, C22–C29, C64
Radiochemical	Sb, As, Cu, Au, Ir, Hg, Mo, Os, Pd, Pt, Ru, Se, Ag, Te, Th, W, U, La, Ce, Pr, Nd, Sm, Eu, Gd, Tb, Dy, Ho, Er, Yb, Lu, $^{235}U/^{238}U$	C5–C7, C30–C38, C51, C64
Delayed neutron assay	U	C7, C8, C10, C11, C39, C40, C64
Atomic absorption	Sb, As, Ba, Be, Bi, Cd, Ca, Cr, Co, Cu, Ga, In, Fe, Pb, Li, Mg, Mn, Hg, Mo, Ni, K, Se, Ag, Na, Sr, Te, Tl, Sn, Ti, V, Zn, Al	C6, C41–C48, C52–C54, C64
Inductively coupled plasma mass spectrometry	Sb, As, Ba, Be, B, Bi, Cd, Cr, Co, Cu, Ga, In, Pb, Li, Mn, Hg, Mo, Ni, Se, Br, Ag, Sr, Te, Th, Sn, Ti, V, Zn, U, I, Tl, La, Ce, Pr, Nd, Sm, Eu, Gd, Tb, Dy, Ho, Er, Tb, Lu	C64
Ion chromatography	F^-, Cl^-, Br^-, NO_2^-, NO_3^-, SO_4^{-2}, PO_4^{-3} Na^+, K^+, Mg^{+2}, Ca^{+2}	C49, C64
Potentiometric	F^-, NH_4^+, pH, Br^-, Cl_2 (total), Cl_2 (free)	C50, C55, C64
Combustion	C, N, H, S, total organic carbon	C29, C61, C62, C64
Corrosivity	—	C56, C57
Ignitability (flash point)	—	C56, C58
Automated colorimetry	CN^-, NH_4^+, PO_4^{-3}, NO_3^-, NO_2^-, Cl^-, COD, TKN (total Kjeldahl nitrogen), Si, B, SO_4^{-2}, Cr^{+6}	C6, C59–C61, C64
Inductively coupled plasma atomic emission spectrometry	Al, Ag, As, B, Be, Ba, Cd, Co, Cu, Ca, Cr, Fe, K, Li, Mg, Mn, Mo, Na, Ni, P, Pb, Re, S, Sb, Se, Si, Th, Tl, V, Y, Zn	C64–C67

capture. Also available is a high-pressure liquid chromatograph equipped with an ultraviolet (UV) and refractive index detection system, an infrared spectrophotometer, and a UV/visible spectrophotometer for colorimetric analyses. Methods used for sample preparation include solvent extraction, soxhlet extraction, liquid/liquid extraction, kuderna danish concentration, column separation, head space, and PAT. The methods used for analyses in 1989, along with references, are shown in Table C-2. Tables C-3 through C-7 show compounds determined by these methods and representative detection limits.[C69,C70]

The organic mixed-waste program is functioning on a limited-sample basis. Equipment and personnel are being dedicated to this analytical program. Special handling procedures for low-level mixed-waste samples have been implemented. Future expansion into a larger laboratory will allow the program to process an increased number of samples.

D. Analytical Chemistry Quality Evaluation Program

1. Introduction. Control samples are analyzed in conjunction with the normal analytical chemistry workload. Such samples consist of several general types: calibration standards, reagent blanks, process blanks, matrix blanks, duplicates, spikes, and reference materials. Analysis of control samples fills two needs in analytical work: (1) it provides quality control over analytical procedures so that problems that might occur can be identified and corrected, and (2) data obtained from analysis of control samples permit evaluation of the capabilities of a particular analytical technique to determine a given element or constituent under a certain set of circumstances.

In 1989, blind samples were added to our previously completely open quality assurance (QA) sample system. Blind QA samples are disguised and numbered to resemble unknown samples in a set, and no attempt is made to conceal the identity of the open QA samples from the analyst. In neither case are the concentrations of the analytes of interest revealed until after the data have been formally reported.

These samples are submitted to the laboratory at regular intervals and are analyzed in association with other samples; that is, they are not handled as a unique set of samples. We feel it would be difficult for analysts to give the samples special attention, even if they were so

Table C-2. Method Summary (Organic Compounds)

Analyte	Matrix	Method[a]	Technique[b]	Reference
Volatile organic compounds	Air	—	GC/MS	C64
	Soil	CLP/524	PAT/GC/MS	C63–C65
	Water	524	PAT/GC/MS	C63
EP[c] toxicity	Soil	1310, 8080 8150	GC/ECD	C65
PCBs	Water	606	GC/ECD	C63
	Soil	8080	GC/ECD	C65
	Oil	IH 320	GC/ECD	C64
Semivolatile organic compounds	Soil and waste	625	GC/MS	C69,C70

[a]Contract Laboratory Program (CLP), industrial hygiene (IH).

[b]Gas chromatography (GC), purge and trap (PAT), electron capture detection (ECD), and mass spectrometry (MS).

[c]Extraction procedure (EP).

Table C-3. Volatile Organic Compounds in Water, Determined by PAT Analyses

Compound	CAS #	Representative Limits of Quantification (µg/L)
Chloromethane	74-87-3	20
Vinyl chloride	75-01-4	20
Bromomethane	74-83-9	20
Chloroethane	75-00-3	20
Acetone	67-64-1	20
Trichlorofluoromethane	75-69-4	10
1,1-Dichloroethene	75-35-4	10
Methylene chloride	75-09-2	10
Carbon disulfide	75-15-0	10
t-1,2-Dichloroethene	156-60-5	10
1,1-Dichloroethane	75-34-3	10
c-1,2-Dichloroethene	156-59-2	10
Bromochloromethane	74-97-5	10
Chloroform	67-66-3	10
1,2-Dichloroethane	107-06-2	10
1,1-Dichloropropene	563-58-6	10
Vinyl acetate	108-05-4	20
2-Butanone	78-93-3	10
2,2-Dichloropropane	590-20-7	10
1,1,1-Trichloroethane	71-55-6	10
Carbon tetrachloride	56-23-5	10
Benzene	71-43-2	10
1,2-Dichloropropane	78-87-5	10
Trichloroethene	79-01-6	10
Dibromomethane	74-95-3	10
Bromodichloromethane	75-27-4	10
t-1,3-Dichloropropene	1006-10-26	10
c-1,3-Dichloropropene	1006-10-15	10
1,1,2-Trichloroethane	79-00-5	10
1,3-Dichloropropane	142-28-9	10
Chlorodibromomethane	124-48-1	10
Bromoform	75-25-2	10
4-Methyl-2-pentanone	10-81-1	20
Toluene	108-88-3	10
2-Hexanone	59-17-86	20
1,2-Dibromomethane	74-95-3	10
Tetrachloroethene	127-18-4	10
Chlorobenzene	108-90-7	10
1,1,1,2-Tetrachloroethane	630-20-6	10
1-Chlorohexane	544-10-5	10
Ethylbenzene	100-41-4	10
m,p-Xylene (total)	108-38-3 + 106-42-3	10
o-Xylene	95-47-6	10
Styrene	100-42-5	10

Table C-3 (Cont)

Compound	CAS #	Representative Limits of Quantification (µg/L)
1,1,2,2-Tetrachloroethane	79-34-5	10
1,2,3-Trichloropropane	96-18-4	10
Isopropylbenzene	98-82-8	10
Bromobenzene	108-86-1	10
n-Propylbenzene	103-65-1	10
2-Chlorotoluene	95-49-8	10
4-Chlorotoluene	106-43-4	10
1,3,5-Trimethylbenzene	108-67-8	10
tert-Butylbenzene	98-06-6	10
1,2,4-Trimethylbenzene	95-63-6	10
sec-Butylbenzene	135-98-8	10
1,3-Dichlorobenzene	541-73-1	10
1,4-Dichlorobenzene	106-46-7	10
p-Isopropyltoluene	99-87-6	10
1,2-Dichlorobenzene	95-50-1	10
n-Butylbenzene	104-51-8	10
1,2-Dibromo-3-chloropropane	96-12-8	10
1,2,4-Trichlorobenzene	120-82-1	10
Naphthalene	91-20-3	10
1,2,3-Trichlorobenzene	87-61-6	10
Hexachlorobutadiene	87-68-3	10

Column: Supelco DB 624, 30 m × 0.530 mm × 1.5 µm. Limits of detection are estimated using the minimum signal required to yield identifiable mass spectral scan.

inclined. We endeavor to run at least 10% of stable constituent, organic, and selected radioactive constituent analyses as quality control samples using the materials described above. A detailed description of our quality assurance program and a complete listing of our annual results have been published annually since 1976.[C71, C72]

2. Radioactive Constituents. Quality control and quality assurance samples for radioactive constituents are obtained from outside agencies, in addition to those that are prepared internally. The Quality Assurance Division of the Environmental Monitoring Systems Laboratory (EPA, Las Vegas) provides water, foodstuffs, and air filter samples for analysis of gross alpha, gross beta, ^{3}H, ^{40}K, ^{60}Co, ^{65}Zn, ^{90}Sr, ^{106}Ru, ^{131}I, ^{134}Cs, ^{137}Cs, ^{226}Ra, and $^{239,240}Pu$ as part of an ongoing laboratory intercomparison program. The National Institute of Standards and Technology (NIST, formerly the National Bureau of Standards) provides several soil and sediment standard reference materials (SRMs) for environmental radioactivity. These SRMs are certified for ^{60}Co, ^{90}Sr, ^{137}Cs, ^{226}Ra, ^{238}Pu, $^{239,240}Pu$, ^{241}Am, and several other nuclides. The DOE's Environmental Measurements Laboratory also provides quality assurance samples.

Soil, rock, and ore samples obtained from the Canadian Geological Survey (CGS) are used for quality assurance of uranium and thorium determinations in silicate matrices. Our own in-house standards are prepared by adding known quantities of liquid NIST radioactivity SRMs to blank matrix materials.

3. Stable Constituents. Quality assurance for the stable constituent analysis program is maintained by analysis of certified or well-characterized environmental

Table C-4. Volatile Organic Compounds in Solids, Determined by SW-846 Method 8010 Analyses

Compound	CAS #	Limits of Quantification (µg/kg)
Chloromethane	74-87-3	20
Vinyl chloride	75-01-4	20
Bromomethane	74-83-9	20
Chloroethane	75-00-3	20
Acetone	67-64-1	20
Trichlorofluoromethane	75-69-4	10
1,1-Dichloroethene	75-35-4	10
Methylene chloride	75-09-2	10
Carbon disulfide	75-15-0	10
t-1,2-Dichloroethene	156-6	10
1,1-Dichloroethane	75-34-3	10
c-1,2-Dichloroethene	156-59-4	10
Bromochloromethane	74-97-5	10
Chloroform	67-66-3	10
1,2-Dichloroethane	107-06-2	10
1,1-Dichloropropene	563-58-6	10
Vinyl acetate	108-05-4	10
2-Butanone	78-93-3	20
2,2-Dichloropropane	590-20-7	10
1,1,1-Trichloroethane	71-55-6	10
Carbon tetrachloride	56-23-5	10
Benzene	71-43-2	10
1,2-Dichloropropane	78-87-5	10
Trichloroethene	79-01-6	10
Dibromomethane	74-95-3	10
Bromodichloromethane	75-27-4	10
t-1,3-Dichloropropene	1006-10-26	10
c-1,3-Dichloropropene	1006-10-15	10
1,1,2-Trichloroethane	79-00-5	10
1,3-Dichloropropane	142-28-9	10
Chlorodibromomethane	124-48-1	10
Bromoform	75-25-2	10
4-Methyl-2-pentanone	10-81-1	20
Toluene	108-88-3	10
2-Hexanone	59-17-86	20
1,2-Dibromomethane	74-95-3	10
Tetrachloroethene	127-18-4	10
Chlorobenzene	108-90-7	10
1,1,1,2-Tetrachloroethane	630-20-6	10
1-Chlorohexane	544-10-5	10
Ethylbenzene	100-41-4	10
m,p-Xylene (total)	108-38-3 + 106-42-3	10
o-Xylene	95-47-6	10
Styrene	100-42-5	10
1,1,2,2-Tetrachloroethane	79-34-5	10

Table C-4 (Cont)

Compound	CAS #	Limits of Quantification (µg/kg)
1,2,3-Trichloropropane	96-18-4	10
Isopropylbenzene	98-82-8	10
Bromobenzene	108-86-1	10
n-Propylbenzene	103-65-1	10
2-Chlorotoluene	95-49-8	10
4-Chlorotoluene	106-43-4	10
1,3,5-Trimethylbenzene	108-67-8	10
tert-Butylbenzene	98-06-6	10
1,2,4-Trimethylbenzene	98-63-6	10
sec-Butylbenzene	135-98-8	10
1,3-Dichlorobenzene	541-73-1	10
1,4-Dichlorobenzene	106-46-7	10
p-Isopropyltoluene	99-87-6	10
1,2-Dichlorobenzene	95-50-1	10
n-Butylbenzene	104-51-8	10
1,2-Dibromo-3-chloropropane	96-12-8	10
1,2,4-Trichlorobenzene	120-82-1	10
Naphthalene	91-20-3	10
1,2,3-Trichlorobenzene	87-61-6	10
Hexachlorobutadiene	87-68-3	10

Column: Supelco DB 624, 30 m × 0.53 mm fused silica capillary, using a methanolic partition with PAT. Limits of quantification are calculated from the intercept of the external calibration curve using a flame ionization detector.

materials. The NIST has a large set of silicate, water, and biological SRMs. The EPA distributes mineral analysis and trace analysis water standards. Rock and soil reference materials have been obtained from the CGS and the United States Geological Survey (USGS). Details of this program have been published elsewhere.[C72]

The analytical quality control program for a specific batch of samples is the combination of many factors. These include the "fit of the calibration," instrument drift, calibration of the instrument and/or reagents, recovery for SRMs, and precision of results. In addition, there is a program for evaluation of the quality of results for an individual water sample.[C73] These individual water sample quality ratios are the sum of the milliequivalent (meq) cations to the sum of meq anions, the meq hardness of the sum of meq Ca^{+2} and Mg^{+2}, the observed total dissolved solids (TDS) to the sum of solids, and the observed conductivity to the sum of contributing conductivities, as well as the two ratios obtained by multiplying (0.01) × (conductivity) and dividing by the meq cations and the meq anions.

4. Organic Constituents. Soil samples are received for the analysis of volatile and semivolatile organic compounds, pesticides, and herbicides for compliance work done under the Resource Conservation and Recovery Act (RCRA). Certified matrix-based reference materials were not available for these analyses, so stock solutions of the analytes were prepared and spiked directly on blank soil by the quality assurance section. Because homogeneity of the sample could not be ensured, the entire sample was analyzed. Volatile organic compounds are analyzed by gas chromatography/mass spectrometry and are now spiked in the microgram-per-kilogram range.

The majority of water samples submitted during 1989 were environmental compliance samples for the analysis of pesticides, herbicides, volatile and semivolatile organic compounds, and PCBs. Methods were developed and

Table C-5. Semivolatile Organic Compounds in Water

Compound	CAS #	Limits of Quantification (µg/L)
N-Nitrosodimethylamine	62-75-9	20
Aniline	62-55-3	20
Phenol	108-95-2	10
Bis(-2-chloroethyl)ether	111-44-4	10
2-Chlorophenol	95-57-8	10
1,3-Dichlorobenzene	541-73-1	10
1,4-Dichlorobenzene	106-46-7	10
Benzyl alcohol	100-51-6	10
1,2-Dichlorobenzene	95-50-1	10
2-Methylphenol	95-48-7	10
Bis(2-chloroisopropyl)ether	39638-32-9	10
4-Methylphenol	106-44-5	10
N-Nitroso-di-*n*-propylamine	621-64-7	10
Hexachloroethane	67-72-1	10
Nitrobenzene	98-95-3	10
Isophorone	78-59-1	10
2-Nitrophenol	88-75-5	10
2,4-Dimethylphenol	105-67-9	10
Benzoid acid	65-85-0	50
Bis(-2-chloroethoxy)methane	111-91-1	10
2,4-Dichlorophenol	120-83-2	10
1,2,4-Trichlorobenzene	120-82-1	10
Naphthalene	91-20-3	10
4-Chloroaniline	106-47-8	10
Hexachlorobutadiene	87-68-3	10
4-Chloro-3-methylphenol	59-50-7	10
2-Methylnaphthalene	91-57-6	10
Hexachlorocyclopentadiene	77-47-4	10
2,4,6-Trichlorophenol	88-06-2	10
2,4,5-Trichlorophenol	95-95-4	50
2-Chloronaphthalene	91-58-7	10
2-Nitroaniline	88-74-4	50
Dimethyl phthalate	131-11-3	10
Acenaphthylene	208-96-8	10
3-Nitroaniline	99-09-2	50
Acenaphthene	83-32-9	10
2,4-Dinitrophenol	51-28-5	50
4-Nitrophenol	100-02-7	50
Dibenzofuran	132-64-9	10
2,4-Dinitrotoluene	121-14-2	10
2,6-Dinitrotoluene	606-20-2	10
Diethylphthalate	84-66-2	10
4-Chlorophenyl-phenylether	7005-72-3	10
Fluorene	86-73-7	10
4-Nitroaniline	100-01-6	50
4,6-Dinitro-2-methylphenol	534-52-1	50
N-Nitrosodiphenylamine	86-30-6	10

Table C-5 (Cont)

Compound	CAS #	Limits of Quantification (µg/L)
Azobenzene	103-33-3	50
4-Bromophenyl-phenylether	101-55-3	10
Hexachlorobenzene	118-74-1	10
Pentachlorophenol	87-86-5	50
Phenanthrene	85-01-8	10
Anthracene	120-12-7	10
Di-*n*-butylphthalate	84-74-2	10
Fluoranthene	206-44-0	10
Benzidine	92-87-5	50
Pyrene	129-00-0	10
Butylbenzylphthalate	85-68-7	10
3,3′-Dichlorobenzidine	91-94-1	20
Benzo(*a*)anthracene	56-55-3	10
Bis(2-ethylhexyl)phthalate	117-81-7	10
Chrysene	218-01-9	10
Di-*n*-octyl phthalate	117-84-0	10
Benzo(*b*)fluoranthene	205-99-2	10
Benzo(*k*)fluoranthene	207-08-9	10
Benzo(*a*)pyrene	50-32-8	10
Indeno(1,2,3-*cd*)pyrene	193-39-5	10
Dibenzo(*a,h*)anthracene	53-70-3	10
Benzo(*g,h,i*)perylene	191-24-2	10

Table C-6. Volatile Organic Compounds Determined in Air (Pore Gas)

Compound	CAS #	Limits of Quantification (µg/tube)
Chloroform	67-66-3	1.0
1,1,1-Trichloroethane	71-56-6	1.0
Benzene	71-43-2	1.0
Carbon tetrachloride	56-23-5	1.0
Trichloroethene	79-01-6	1.0
Toluene	108-88-3	1.0
Tetrachloroethene	127-18-4	1.0
Chlorobenzene	108-90-7	1.0
Ethylbenzene	100-41-4	1.0
o-Xylene	95-47-6	1.0
m,p-Xylene (total)	108-38-3 and 106-42-3	1.0
1,2,4-Trimethylbenzene	95-63-6	1.0

Table C-7. EP Toxicity of Organic Contaminants

Contaminant	Maximum Concentration (mg/L)	Representative Detection Limits (mg/L)[a]
Endrin (1,2,3,4,10,10-hexachloro-6 7-*epoxy*-1,4,4*a*,5,6,7,8,8*a*-octahydro-1 4-*endo*, *endo*-5, 8-dimethanonaphthalene)	0.02	0.006
Lindane (α,α,β,α,α,β-hexachlorocyclohexane, gamma isomer)	0.4	0.0002
Methoxychlor (1,1,1-trichloro-2,2-bis(*p*-methoxyphenyl)ethane)	10.0	0.004
Toxaphene (technical chlorinated camphene, 67%–69% chlorine)	0.5	0.020
2,4-*D* (2,4-dichlorophenoxyacetic acid)	10.0	0.016
2,4,5-TP (Silvex) (2,4,5-trichlorophenoxypropionic acid)	1.0	0.005

[a]Column: 30 m × 0.32-mm SPB-5 fused silica capillary. Detection limit was calculated as 4 times the gas chromatography background noise found when an electron capture detector was used.

refined for in-house preparation of quality control samples for volatile and semivolatile organic compounds in water.

Oil samples were received for the analysis of PCBs and organic solvents. The majority of these oils await disposal by the Laboratory's Waste Management Group (HSE-7) and include oil from decommissioned transformers. The remaining oil samples were environmental or industrial hygiene samples taken from areas of possible contamination.

Quality control samples for PCBs were prepared by diluting EPA standards or by preparing standards in hexane from the neat analyte. In the United States, the only PCBs that have been found in transformers have been PCBs 1242, 1254, and 1260. Samples submitted for analysis have contained only these PCBs, so they have been used to spike quality control samples. Vacuum pump oil was chosen for the oil base blank after an experiment with various brands of motor oil showed excessive matrix interferences.

5. Indicators of Accuracy and Precision. Accuracy is the degree of difference between average test results and true results, when the latter are known or assumed. Precision is the degree of mutual agreement among replicate measurements (frequently assessed by calculating the standard deviation of a set of data points). Accuracy and precision are evaluated from results of analysis of reference materials. These results (r) are normalized to the known quality in the reference material to permit comparison among reference materials of a similar matrix containing different concentrations of the analyte:

$$r = \frac{\text{Reported quantity}}{\text{Known quantity}}.$$

A mean value R for all normalized analyses of a given type is calculated as follows for a given matrix type (N is total number of analytical determinations):

$$R = \frac{\sum_i r_i}{N},$$

Standard deviations of R are calculated assuming a normal distribution of the population of analytical determinations (N):

$$s = \sqrt{\frac{\sum_i (R - r_i)^2}{(N-1)}}.$$

These calculated values are presented as the HSE-9 "Ratio ± Std Dev" in Tables C-8 through C-20. The mean value of R is a measure of the accuracy of a procedure. Values of R greater than unity indicate a positive bias in the analysis; values less than unity, a negative bias.

The standard deviation is a measure of precision. Precision is a function of the concentration of analyte; that is, as the absolute concentration approaches the limit of detection, precision deteriorates. For instance, the precision for some determinations is quite large because many standards approach the limits of detection of a measurement. We address this issue by calculating a new quality assurance parameter,

$$\left|\overline{X}_E - \overline{X}_c\right| < 1.96\sqrt{(S_E)^2 + (S_c)^2},$$

where X_E and X_c are the experimentally determined and certified or consensus mean elemental concentrations, respectively, and S_E and S_c are the standard deviations associated with X_E and X_c, respectively. An analysis will be considered under control when this condition is satisfied for a certain element in a given matrix. Details on this approach are presented elsewhere.[C72] The percentage of the tests for each parameter that fell within ±2 propagated standard deviations (under control), between ±2 and ±3 propagated standard deviations (warning level), or outside ±3 propagated standard deviations (out of control) is shown in Tables C-8 to C-23. A summary of the overall state of statistical control for analytical work done by HSE-9 is also provided in Tables C-21 to C-23.

A new table, C-24, has been added this year, summarizing our recovery information on organic surrogate compounds required for use in the EPA-CLP protocol. All mean recoveries are within the EPA limits, although the standard deviations are large. A summary of the overall state of statistical control for analytical work done by HSE-9 is provided in Table C-25.

For most radiochemical and inorganic analyses, more than 90% are within ±2 propagated standard deviations of the certified/consensus mean values (under control). Our performance on stable elements in biologicals improved significantly this year, but our radiochemical determinations in biologicals deteriorated. Our organic analyses in bulk materials remained under excellent control, and our organic determinations in water improved significantly over last year. However, our overall performance on organic measurements in soils deteriorated markedly over the previous year's marginal record. This area will be the focus of increased quality assurance/quality control efforts in the future.

New instrumentation has been purchased for the analysis of volatile organic compounds, and considerable improvement has been shown in this area. Analyses of semivolatile organic compounds continue to pose a challenge, but new extraction methods are being developed that show promise. Additional experienced personnel have been hired for the analysis of semivolatile compounds, currently the most complex organic analysis of the environmental protocols.

The analysis of any organic compound on silicate materials is difficult because of the tremendous number and types of matrix complications. In addition to the blind quality control samples, the analyst spikes samples for volatile and semivolatile compound analysis with a series of three to five surrogate compounds and checks for the percentage of recovery, as directed by EPA guidelines. If these recoveries are out of acceptable range, corrective action should be taken. Matrix spike samples are also prepared. A portion of the actual sample is spiked with target compounds, and recoveries are evaluated using EPA guidelines.

Data on analytical detection limits are given in Table C-26.

Because the Laboratory site is topographically complex, it is difficult to design a meteorological monitoring network capable of capturing the full spatial variability of all the measured variables. Quantifying the representativeness of the wind measurements is an especially difficult task. Adequacy of the current network of four towers depends on meteorological conditions and on the applications of the data. When the data are used to compute statistics for periods of several days or more, results for a particular tower site are thought to be representative of an area (on the plateau) a few kilometers in radius. When the application is modeling plume transport in a stable atmosphere, this radius may shrink to a few hundred meters.

Because the atmospheric state variables (temperature, pressure, and moisture) depend mostly on elevation, interpolation between measurement sites is usually well justified.

The current rain gage network documents the east-to-west gradient in the annual precipitation well enough for most purposes; however, the seven station network is inadequate for delineating smaller scale spatial or temporal patterns.

The components of the surface radiation and energy balances are expected to show considerable spatial variability; however, most applications using these data have not required great accuracy. Recent inquiries about evapotranspiration, which is related to the latent heat flux, may make it necessary to revise measurement strategies in this area.

Most signals are sampled every 3 s and averaged over 15 min so there are 300 samples per average signal. This averaging filters out most of the fluctuations that are generally attributed to turbulence. The 15 min average for wind is used to represent the mean wind. The standard deviations of the fluctuations in the vertical speed and horizontal wind direction are also computed every 15 min (also based on an average sample size of 300), and the results are used to characterize the turbulence in the vertical and horizontal planes, respectively.

Signals used in estimating turbulent eddy fluxes are sampled at 2 Hz and are combined in a covariance calculation every 15 min; thus the sample size for the flux variables is 1,800.

The sonic, detection, and ranging (SODAR) variables give spatial as well as temporal averages of the wind. The SODAR system is a remote sensing device that samples the wind over 30 m (98 ft), nonoverlapping layers from 60 to 720 m (197 to 2,360 ft) above the ground, depending on conditions. Each layer is sampled once every 16.7 s and averaged over 15 min. This gives a maximum sample size of 54; however, in practice the sample size is often less than 54 because conditions are often less than optimal for acoustic returns. Studies (for example, Kaimal 1984) show that the root-mean-square (RMS) difference between tower- and SODAR-derived wind directions is approximately 25°, and the RMS difference in speed is approximately 1 m/s (3.2 ft/s). Preliminary comparisons between tower- and SODAR-derived winds at the TA-6 site show that the RMS difference is close to 20°. However, much larger differences have been observed at times, especially below 120 m (394 ft), and these have been attributed to spurious echoes that occur at the TA-6 site under certain conditions. Efforts have been made to minimize this echo interference. The SODAR system also calculates RMS values of wind direction and vertical speed; however, because of the small sample size, little confidence can be placed in estimates.

All instrumentation is audited twice during the year. The winter audit is conducted by local staff and the summer audit is conducted by an external, independent contractor. No significant problems were identified by either audit in 1992 (META 1992).

Quality control of the data consists of automatic edits based on range checking, a daily review of computer-generated tables and plots, and weekly inspection of time series plots of all signals. The fraction of high-quality data recovered during the year exceeded 95%.

D. Analytical Chemistry

1. Methodology.

a. Introduction. Most analytical chemistry services are provided by the Laboratory's EM-9 Group. The EM-9 Sample Management Section functions as an interface between the group and its customers. This section provides the sample collector with presampling information about sample containers, sample volumes, and sample

preservation techniques. Collection of samples for chemical and radiochemical analyses follows a set procedure to ensure proper sample collection, documentation, submittal for chemical analysis, and posting of analytical results.

Before sample collection, the Sample Management Section discusses the schedule and procedures to be followed with the sample collector. The discussion includes

- number and type of samples;
- type of analyses and required limits of detection;
- proper sample containers;
- preparation of sample containers with preservative, if needed; and
- sample schedule to ensure minimum holding time so that analyses comply with EPA criteria.

After a sample is collected, it is delivered to the EM-9 Sample Management Section, where the pertinent information is entered into the EM-9 Laboratory Information Management System, and the request is given a form number. Each number, representing a single sample, is assigned to a particular station and is entered into the collector's log book. The processing of samples includes (1) validating all samples for sampling correctness and integrity, (2) scheduling and labeling all samples for analysis, (3) initiating internal COC procedures for all samples, and (4) arranging for the proper disposal of any unused portions of samples.

The request form number is entered in the collector's log book opposite sample numbers submitted, along with the date the sample was delivered to EM-9. EM-9 provides COC forms for the samples once they are received if COC did not begin in the field. The date, time, temperature (if the sample is water), and other pertinent information and remarks are entered opposite the sample number and station previously listed in the log book. The sample container is labeled with station name, sample number, date, and preservative, if added.

The analytical request form contains the following information related to ownership and the program submitted: (1) requester, i.e., sample collector; (2) program code; (3) sample owner, i.e., program manager; (4) date; and (5) total number of samples. The second part of the request form contains (1) sample number or numbers; (2) medium, e.g., water; (3) types of analyses, i.e., specific radionuclide and/or chemical constituents; (4) technique, i.e., analytical method to be used for individual constituents; (5) analyst, i.e., chemist to perform analyses; (6) priority of sample or samples; and (7) remarks. One copy of the form goes to the collector for filing, one is kept by the Sample Management Section, and the other copies accompany the sample.

The analytical results are returned to the sample collector, who posts the data according to sample and station taken from the log book. These data sheets are included in the final report.

b. Radioactive Constituents. Environmental samples are routinely analyzed for the following radioactive constituents: gross alpha, beta, and gamma; isotopic plutonium; americium; uranium; cesium; tritium; and strontium. Detailed procedures are published in the EM-9 Analytical Methods Manual (Gautier 1986). Occasionally, other radionuclides from specific sources are determined: ^{7}Be, ^{22}Na, ^{40}K, ^{51}Cr, ^{60}Co, ^{65}Zn, ^{83}Rb, ^{106}Ru, ^{134}Cs, ^{140}Ba, ^{152}Eu, ^{154}Eu, and ^{226}Ra. All but ^{226}Ra are determined by gamma-ray spectrometry on large HPGe detectors. The requirements for detection of ^{137}Cs in drinking water have been lowered to 10 pCi/L. To achieve this detection limit, a HPGe detector was reconfigured in a new shielded chamber that provides lower background. This detector appears to be able to attain the 10 pCi/L detection limit. Many of the 1992 water samples were counted in this new configuration. Depending on the concentration and matrix, ^{226}Ra is measured by emanation or by gamma-ray spectrometry of its ^{214}Bi decay product.

During 1992, the criteria for uranium analyses were changed to require lower detection limits and better estimates of the $^{238}U/^{234}U$ activity ratio. These requirements were achieved through measurement by alpha spectrometry. Depending on the need, uranium analyses for 1992 were performed by the following methods. An inductively coupled plasma mass spectrometer (ICPMS) was used for total uranium determination for water samples and for some high mass samples. Alpha spectrometry was used for air and water samples where the ^{234}U concentration was of interest. ICPMS and alpha spectrometry were used for the determination of ^{235}U in soil samples when the level of enrichment or depletion was of concern. Delayed neutron activation (DNA) was used for most high mass

samples until the Omega West Reactor was shut down. Kinetic phosphorimetric analysis (KPA) was initiated to replace DNA.

The KPA method appears to be very useful for uranium determinations where total uranium results are adequate. The procedure has detection limits below ambient levels for all media analyzed to date and appears to be less costly than other methods. KPA will be the method of choice for total uranium determination for all media that were previously analyzed by DNA.

c. Stable Constituents. A number of analytical methods are used for various stable isotopes. The choice of method is based on many criteria, including the operational state of the instruments, time limitations, expected concentrations in samples, quantity of sample available, sample media, and EPA regulations. Instrumental techniques available include neutron activation, atomic absorption, ion chromatography, color spectrophotometry (manual and automated), potentiometry, combustion analysis, ICPMS, and inductively coupled plasma atomic emission spectrometry. Standard chemical methods are also used for many of the common water quality tests. Atomic absorption capabilities include flame, furnace, and cold vapor, as well as flame emission spectrophotometry. The methods used and references for determination of various chemical constituents are presented elsewhere (Gautier 1986).

d. Organic Constituents. Environmental soil and water samples are analyzed using EPA procedures outlined in EPA SW-846 (EPA 1989d) or modified procedures (Gautier 1986) that meet QA criteria outlined in Chapter 1 of SW-846, as shown in Table VIII-1. Methods used are supported by documented spike/recovery studies, method and field blanks, matrix spikes, surrogate spikes, and blind QC samples. VOCs are analyzed using Method 8260, SW-846. Tables D-20 and D-21 list VOCs on the target list for water and soil samples, respectively. Semivolatile organic compounds (SVOCs) are analyzed using Method 8270, SW-846. Table D-22 is the target list for SVOCs in water. Soil-gas (pore-gas) monitoring is performed by collecting organic vapors on charcoal, extracting the charcoal with CS_2 and analyzing the CS_2 extracts using gas chromatography/mass spectrometry (GC/MS). Soil-gas target compounds are listed in Table D-23, and the Toxicity Characteristics Leaching Procedure (TCLP) target compounds are listed in Table D-24.

Instruments available for organic analysis include GC/flame ionization detector, GC/electron capture detector, GC/MS, high performance liquid with ultraviolet (UV) and refractive index detectors, a Fourier transform infrared spectrometer, and a UV/visible spectrophotometer. Sample preparation methods include: Soxhlet extraction, ultrasonic extraction, continuous liquid/liquid extraction, Kuderna Danish concentration, evaporative blowdown, and gel permeation chromatography cleanup of sample extracts.

Table VIII-1. Method Summary (Organic Compounds)

Analyte	Matrix	Method[a]	Technique[b]
VOCs	Air	—	GC/MS
	Soil	8260	PAT/GC/MS
	Water	8260	PAT/GC/MS
TCLP	Soil	1311; 8080; 8150; 8260; 8270	GC/ECD
PCBs	Water	8080	GC/ECD
	Soil	8080	GC/ECD
	Oil	IH 320	GC/ECD
SVOCs	Soil and waste	8270	GC/MS

[a]Industrial hygiene (IH).

[b]Gas chromatograph (GC), purge and trap (PAT), electron capture detection (ECD), and mass spectrometer (MS).

Organic mixed waste analyses are performed for samples containing up to 100 nCi/g (solids/sludges) or 100 nCi/L (solutions) alpha, beta, or gamma. Higher level samples are analyzed on a case-by-case basis. New methods are being developed for routine analysis of mixed waste greater than 100 nCi/g (or 100 nCi/L).

2. Quality Evaluation Program.

a. Introduction. Control samples are analyzed in conjunction with the normal analytical chemistry workload. Such samples consist of several general types: calibration standards, reagent blanks, process blanks, matrix blanks, duplicates, spikes, and reference materials. Analysis of control samples fills two needs in analytical work: (1) it provides QC over analytical procedures so that problems that might occur can be identified and corrected, and (2) data obtained from analysis of control samples permit evaluation of the capabilities of a particular analytical technique to determine a given element or constituent under a certain set of circumstances.

Blind QC samples are numbered to resemble unknown samples in a set. The concentrations of the analytes of interest are not revealed until after the data have been formally reported. These samples are submitted to the laboratory at regular intervals and are analyzed in association with other samples; that is, they are not handled as a unique set of samples. Up to 10% of stable constituent, organic, and selected radioactive constituent analyses are run as QC samples using the materials described above. A detailed description of EM-9's QAP and a complete listing of results have been published annually since 1976 (Gautier 1991).

b. Radioactive Constituents. In addition to samples prepared internally, QC and QA samples for radioactive constituents are provided by outside agencies. The Quality Assurance Division of the Environmental Monitoring Systems Laboratory (EPA, Las Vegas) provides water, milk, and air filter samples for analysis of gross alpha, gross beta, ^{3}H, ^{40}K, ^{60}Co, uranium, ^{65}Zn, ^{90}Sr, ^{106}Ru, ^{131}I, ^{134}Cs, ^{137}Cs, ^{226}Ra, and $^{239,240}Pu$ as part of an ongoing laboratory intercomparison program. NIST provides several soil and sediment standard reference materials (SRMs) for environmental radioactivity. These SRMs are certified for ^{60}Co, ^{90}Sr, ^{137}Cs, ^{226}Ra, ^{238}Pu, ^{239}Pu, ^{241}Am, and several other nuclides. The DOE's Environmental Measurements Laboratory also provides QA samples.

Soil, rock, and ore samples obtained from the Canadian Geological Survey (CGS) are used for QA of uranium and thorium determinations in silicate matrices. EM-9's own in-house standards are prepared by adding known quantities of liquid SRMs for radioactivity, prepared by NIST to blank matrix materials.

c. Stable Constituents. QA for the stable constituent analysis program is maintained through analyses of certified or well-characterized environmental materials. NIST has a large set of silicate, water, and biological SRMs. EPA distributes standards for minerals and other trace constituents in water . Rock and soil reference materials have been obtained from the CGS and the United States Geological Survey. Details of this program have been published elsewhere (Gautier 1991). Stock solutions of inorganic analytes are prepared and spiked on blank matrices by EM-9's Quality Assurance Section.

The analytical QC program for a specific batch of samples is a combination of many factors. These include the "fit of the calibration," instrument drift, calibration of the instrument and/or reagents, recovery for SRMs, and precision of results.

d. Organic Constituents. Soil samples are analyzed for VOCs, SVOCs, pesticides, and herbicides for compliance work done under RCRA. Certified matrix-based reference materials are not available for these analyses, so stock solutions of the analytes are prepared and spiked directly on blank soil by the Quality Assurance Section. Because homogeneity of the sample can not be ensured, the entire sample is analyzed. VOCs are analyzed by GC/MS and are spiked in the microgram-per-kilogram range.

The majority of water samples submitted during 1992 were environmental compliance samples analyzed for pesticides, herbicides, VOCs, SVOCs, and PCBs. Methods were developed and refined for in-house preparation of QC samples for VOCs and SVOCs in water.

Oil samples are received for the analysis of PCBs and organic solvents. QC samples for PCBs are prepared by diluting EPA standards or by preparing standards in hexane from the neat analyte. In the United States, the only PCBs that have been found in transformers have been PCBs 1242, 1254, and 1260. Samples submitted for analysis have contained only these PCBs, so only these have been used to spike QC samples. Vacuum pump oil was chosen

for the oil base blank after an experiment with various brands of motor oil was complicated by excessive matrix interferences.

3. Data Handling of Radiochemical Samples.

Measurements of radiochemical samples require that analytical or instrumental backgrounds be subtracted to obtain net values. Thus, net values are sometimes obtained that are lower than the minimum detection limit of the analytical technique. Consequently, individual measurements can result in values of positive or negative numbers. Although a negative value does not represent a physical reality, a valid long-term average of many measurements can be obtained only if the very small and negative values are included in the population calculations (Gilbert 1975).

For individual measurements, uncertainties are reported as one standard deviation. The standard deviation is determined from the propagated sources of analytical error.

Standard deviations for the station and group (off-site regional, off-site perimeter, and on site) means are calculated using the following equation:

$$s = \sqrt{\frac{\sum_{i=1}^{N}\left(\bar{c} - c_i\right)^2}{(N-1)}},$$

where

ci = sample i,

$\bar{c}$ = mean of samples from a given station or group, and

N = number of samples comprising a station or group.

This value is reported as the uncertainty for the station and group means.

4. Indicators of Analytical Accuracy and Precision.

Accuracy is the degree of difference between average test results and true results when the latter are known or assumed. Precision is the degree of mutual agreement among replicate measurements (frequently assessed by calculating the standard deviation of a set of data points). Accuracy and precision are evaluated from results of analyses of reference materials. These results (r) are normalized to the known quality in the reference material to permit comparison among references of a similar matrix containing different concentrations of the analyte:

$$r = \frac{\text{Reported quantity}}{\text{Known quantity}}.$$

A mean value R for all normalized analyses of a given type is calculated as follows for a given matrix type (N is total number of analytical determinations):

$$R = \frac{\sum_i r_i}{N},$$

Standard deviations of R are calculated assuming a normal distribution of the population of analytical determinations (N):

$$s = \sqrt{\frac{\sum_i (R - r_i)^2}{(N-1)}}.$$

These calculated values are presented as the EM-9 "Ratio ± Std Dev" in Tables D-25 to D-33. The mean value of R is a measure of the accuracy of a procedure. Values of R greater than unity indicate a positive bias in the analysis; values less than unity, a negative bias. The standard deviation is a measure of precision. Precision is a function of the concentration of analyte; that is, as the absolute concentration approaches the limit of detection, precision deteriorates. For instance, the precision for some determinations is quite good because many standards approach the limits of detection of a measurement. We address this issue by calculating a new QA parameter:

$$\left|\overline{X}_E - \overline{X}_C\right|,$$

where $\overline{X}_E$ is the experimentally determined mean elemental concentration based on N measurements, and $\overline{X}_C$ is the certified or consensus mean elemental concentration. The total standard deviation, S_T, of $X_E - X_C$ is given by:

$$Sr = \sqrt{\left(U_E^2 / N\right) + S_C^2},$$

where U_E is the standard deviation of a single experimentally determined measurement, and S_c is the standard deviation of the certified or consensus mean elemental concentration.

Analyses are considered under control if the absolute value of the difference between our result ($\overline{X}_E$) and the certified or consensus mean ($\overline{X}_c$) is within the propagated standard deviation of the experimental uncertainty (U_E) and of the certified mean (S_c). N is equal to the number of measurements on a sample, and in this case, is equal to 1. This concept, an adaptation of Dixon and Massey (Dixon 1969), is expressed in the following equation to include the experimental uncertainty:

$$z = \frac{\left|\overline{X}_E - \overline{X}_C\right|}{\sqrt{\left(U_E^2 / N\right) + S_C^2}}$$

The test statistics used in this document are based on 5% and 0.2% levels of significance. The respective critical regions are defined for values of z between 2 and 3. Data having a calculated z value ≤2 are accepted as in control at the 5% level of significance. Data that have a calculated z value >2 and ≤3 are considered at the warning level, or the 0.2% level of significance. Data with a z value >3 are considered out of control. These test statistics are also incorporated in the QACHECK computer program.

The percentage of the tests for each parameter where $\overline{X}_E - \overline{X}_C$ fell within ≤2 S_T (under control), between 2S_T and 3S_T (warning level), or outside >3S_T (out of control) is shown in Tables D-26 to D-33. A summary of the overall state of statistical control for analytical work done by EM-9 is also provided in Table VIII-2.

Table VIII-3 summarizes recovery information on organic surrogate compounds required for use in the EPA-Contract Laboratory Program protocol. Table VIII-4 summarizes EM-9's overall record of meeting EPA SW-846-specified holding times for samples during 1992. The data include all samples for which holding times were missed and the customer elected to either resample or accept the data as usable. Table D-34 reports the incidence of false positive results for blank QC samples and false negative results for spiked QC samples at the 95% confidence level.

For all radiochemical and inorganic analyses, more than 90% are within <2 propagated standard deviations of the certified/consensus mean values (under control). EM-9's performance on most classes of inorganic matrices and most classes of radiochemical matrices has remained virtually unchanged since 1991, while it improved its analyses for radiochemicals in biological samples. Most stable element matrices were in control and were unchanged from 1991 but the overall control of stable elements on filters declined compared with the 1991 record. This area will be the focus of increased QA/QC efforts in the future. Data on analytical detection limits are given in Table D-35.

Table VIII-2. Overall Summary of EM-9 Quality Assurance Tests for 1992

Analysis	No. of QC tests with CV[a]	Under Control $<2S_T$ (%)	Warning $2–3S_T$ (%)	Out of Control $>3S_T$ (%)
Stable Elements				
Filters	14	71	29	—
Soil	432	86	6	8
Water	3,470	95	3	2
Radiochemical Elements				
Biologicals	53	94	6	—
Filters	240	96	2	2
Soils	455	92	4	4
Water	1,007	97	2	1
Organic Compounds				
Filters	224	99	1	—
Bulk Materials	464	96	1	3
Soil	3,918	95	2	3
Charcoal Tube	1,712	95	4	1
Water	1,179	94	2	4

[a]CV = Certified values.

Table VIII-3. Summary of Organic Surrogate Compounds as Required for Compliance with EPA SW-846 Criteria for 1992

Analysis	EPA SW-846 Range Low	EPA SW-846 Range High	Number of Surrogates In-Range	Number of Surrogates Total	% In-Range	% of Samples Run with Surrogate
Volatile Organic Compounds						
In Soil						
1,2-Dichloroethane d4	70	121	181	210	86	100
Toluene d8	81	117	193	210	92	100
4-Bromofluorobenzene	74	121	192	210	92	100
In Water						
1,2-Dichloroethane d4	76	114	70	88	80	98
Toluene d8	88	110	66	88	75	98
4-Bromofluorobenzene	86	115	81	88	92	98
Semivolatile Organic Compounds						
In Soil						
2-Fluorophenol	25	121	355	372	95	100
Phenol d6	24	113	363	372	98	100
Nitrobenzene d5	23	120	363	372	98	100
2-Fluorobiphenyl	30	115	360	372	97	100
2,4,6-Tribromophenol	19	122	359	372	97	100
p-Terphenyl d14	18	137	330	372	89	100
In Water						
2-Fluorophenol	21	100	57	73	78	100
Phenol d6	10	94	61	73	84	100
Nitrobenzene d5	35	114	56	73	77	100
2-Fluorobiphenyl	43	116	56	73	77	100
2,4,6-Tribromophenol	10	123	71	73	97	100
p-Terphenyl d14	33	141	55	73	75	100
Pesticides						
In Soil						
Dibutyl chlorendate	20	150	95	101	94	100
In Water						
Dibutyl chlorendate	24	154	12	13	92	100

Table VIII-4. EM-9's Record for Meeting EPA SW-846-Specified Holding Times during 1992

Organic Analysis Type	Number of Analyses Meeting EPA Critera	Total Number of Analyses Performed	% Within EPA Criteria
Extraction holding times			
Volatiles in soils	150	158	95
Volatiles in waters	59	68	87
Semivolatiles in soils	341	342	100
Semivolatiles in waters	41	49	84
Pesticides in soils	75	75	100
Pesticides in waters	7	7	100
Herbicides in soils	47	48	98
Herbicides in waters	5	6	83
PCBs in soils	185	252	73
PCBs in waters	26	28	93
Instrument analysis holding times			
Volatiles in soils	158	158	100
Volatiles in waters	68	68	100
Semivolatiles in soils	342	342	100
Semivolatiles in waters	49	49	100
Pesticides in soils	75	75	100
Pesticides in waters	7	7	100
Herbicides in soils	48	48	100
Herbicides in waters	6	6	100
PCBs in soils	252	252	100
PCBs in waters	15	28	54

Table D-24. Toxicity Characteristic Leaching Procedure Target Organic Contaminants

Contaminant	Regulatory Level (mg/L)
Compound	
Acrylonitrile	5.0
Benzene	0.07
Carbon disulfide	14.4
Carbon tetachloride	0.07
Chlorobenzene	1.4
Chloroform	0.07
1,2-Dichloroethane	0.04
1,1-Dichlorethylene	0.1
Isobutanol	25
Methylene chloride	8.6
Methyethyl ketone	7.2
1,1,1,2-Tetachloroethane	10.0
1,1,2,2-Tetachloroethane	1.3
Tetachloroethylene	0.1
Toluene	14.4
1,1,1-Trichloroethane	25
1,1,2-Trichloroethane	1.2
Trichloroethylene	0.07
Vinyl chloride	0.05
o-Cresol	10.0
m-Cresol	10.0
p-Cresol	10.0
Pentachlorophenol	3.6
Phenol	14.4
2,3,4,6-Tetachlorophenol	1.5
2,4,5-Trichlorophenol	5.8
2,4,6-Trichlorophenol	0.30
Bis(2-chloroethyl)ether	0.05
1,2-Dichlorobenzene	4.3
1,4-Dichlorobenzene	10.8
2,4-Dinitrotoluene	0.13
Hexachlorobenzene	0.13
Hexachlorobutadiene	0.72
Hexachloroethane	4.3
Nitrobenzene	0.13
Pyridine	5.0
Heptachlor	0.001
Insecticides	
Endrin	0.003
Lindane(γ-BHC)	0.06
Methoxychlor	1.4
Toxaphene	0.07
Herbicides	
2,4-D	1.4
2,3,5-TP (Silvex)	0.14

APPENDIX C

ANALYTICAL CHEMISTRY METHODOLOGY

Most analytical chemistry services are provided by the Laboratory's Health and Environmental Chemistry Group (HSE-9). The HSE-9 sample coordination section functions as a working interface between the group and its customers. This section provides the reader with presampling information in the areas of sample containers, sample volumes, and sample preservation techniques. All samples are delivered to sample coordination personnel and are then scheduled and processed for proper distribution and analysis. The processing of samples includes (1) validating all samples for sampling correctness and integrity, (2) scheduling and labeling all samples for analysis, (3) initiating internal chain-of-custody procedures for all samples, and (4) arranging for the proper disposal of any unused portions of samples.

A. Radioactive Constituents

Environmental samples are routinely analyzed for the following radioactive constituents: gross alpha, beta, and gamma; isotopic plutonium; americium; uranium; cesium; tritium; and strontium. Detailed procedures have been published in this appendix in previous years[C1] and in the group's Analytical Methods Manual.[C2] Occasionally, other radionuclides from specific sources are determined: ^{7}Be, ^{22}Na, ^{40}K, ^{51}Cr, ^{60}Co, ^{65}Zn, ^{83}Rb, ^{106}Ru, ^{134}Cs, ^{140}Ba, ^{152}Eu, ^{154}Eu, and ^{226}Ra. All but ^{226}Ra are determined by gamma-ray spectrometry on large germanium lithide detectors. Depending on the concentration and matrix, ^{226}Ra is measured by emanation or by gamma-ray spectrometry of its ^{214}Bi decay product. Uranium isotopic ratios (^{235}U/^{238}U) are measured by neutron activation analysis where precisions of ±5% are adequate. More precise work requires mass spectrometry. Uranium isotopic ratios are readily determined in environmental materials with precisions of 1%–2% relative standard deviation, at considerably reduced cost relative to neutron activations by inductively coupled plasma mass spectrometry (ICPMS).

B. Stable Constituents

A number of analytical methods are used for various stable isotopes. The choice of method is based on many criteria, including the operational state of the instruments, time limitations, expected concentrations in samples, quantity of sample available, sample matrix, and Environmental Protection Agency (EPA) regulations. Instrumental techniques available include neutron activation, atomic absorption, ion chromatography, color spectrophotometry (manual and automated), potentiometry, combustion analysis, ICPMS, and inductively coupled plasma atomic emission spectrometry. Standard chemical methods are also used for many of the common water quality tests. Atomic absorption capabilities include flame, furnace, cold vapor, and hydride generation, as well as flame-emission spectrophotometry. The methods used and references for determination of various chemical constituents are summarized in Ref. C2. In 1986, the EPA Region VI administration granted HSE-9 limited approval for alternative test procedures for uranium in drinking water (delayed neutron assay) and for chloride in drinking water and wastewater (flow injection without distillation). EPA approval for other modified methods is actively being sought. HSE-9 is participating in the EPA-sponsored study to evaluate ICPMS for acceptance as an EPA-approved methodology.

C. Organic Constituents

Environmental soil and water samples are analyzed using EPA procedures outlined in EPA SW-846[C3] or modified procedures[C2] that meet QA criteria outlined in chapter one of SW-846, as shown in Table C-1. Methods used are supported by documented spike/recovery studies, method and field blanks, matrix spikes, surrogate spikes, and blind quality control samples. Volatile organics are analyzed using method 8260, SW-846. Tables C-2 and C-3 list volatile organics on the target list for water and soil samples,

respectively. Semivolatile organics are analyzed using method 8270, SW-846. Table C-4 is the target list for semivolatile organics in water. Soil-gas (pore-gas) monitoring is performed by collecting organic vapors on charcoal, extracting the charcoal with CS_2 and analyzing the CS_2 extracts using gas chromatography/mass spectrometry (GC/MS). Soil-gas target compounds are listed in Table C-5 and the Extraction Procedure (EP) toxicity target compounds are listed in Table C-6.

Instrumentation available for organic analysis includes GC/flame ionization detector (FID), GC/electron capture detector (ECD), GC/MS, high performance liquid (HPLC) with ultraviolet (UV) and refractive index detectors, a fourier transform infrared spectrometer, and a UV/visible spectrophotometer. Sample preparation methods include: Soxhlet extraction, ultrasonic extraction, continuous liquid/liquid extraction, kuderna danish concentration, evaporative blow down, and gel permeation chromatography cleanup of sample extracts.

Organic mixed waste analyses are performed for samples up to 100 nCi/g (solids/sludges) or 100 nCi/L (solutions) alpha, beta, or gamma. Higher-level samples are analyzed on a case-by-case basis. New methods are being developed for routine analysis of mixed waste greater than 100 nCi/g (or nCi/L). The Laboratory's capacity for mixed waste analyses will increase in the summer of 1991 when mixed waste analytical operations move to a dedicated facility.

D. Analytical Chemistry Quality Evaluation Program

1. Introduction. Control samples are analyzed in conjunction with the normal analytical chemistry workload. Such samples consist of several general types: calibration standards, reagent blanks, process blanks, matrix blanks, duplicates, spikes, and reference materials. Analysis of control samples fills two needs in analytical work: (1) it provides quality control over analytical procedures so that problems that might occur can be identified and corrected, and (2) data obtained from analysis of control samples permit evaluation of the capabilities of a particular analytical technique to determine a given element or constituent under a certain set of circumstances.

Blind quality control (QC) samples are disguised and numbered to resemble unknown samples in a set, and no attempt is made to conceal the identity of the open QC samples from the analyst. In neither case are the concentrations of the analytes of interest revealed until after the data have been formally reported.

These samples are submitted to the laboratory at regular intervals and are analyzed in association with other samples; that is, they are not handled as a unique set of samples. At least 10% of stable constituent, organic, and selected radioactive constituent analyses are run as quality control samples using the materials described above. A detailed description of our quality assurance program and a complete listing of our annual results have been published annually since 1976.[C4]

2. Radioactive Constituents. In addition to those that are prepared internally, quality control and quality assurance samples for radioactive constituents are obtained from outside agencies. The Quality Assurance Division of the Environmental Monitoring Systems Laboratory (EPA, Las Vegas) provides water, milk, and air filter samples for analysis of gross alpha, gross beta, ^{3}H, ^{40}K, ^{60}Co, ^{65}Zn, ^{90}Sr, ^{106}Ru, ^{131}I, ^{134}Cs, ^{137}Cs, ^{226}Ra, and $^{239,240}Pu$ as part of an ongoing laboratory intercomparison program. The National Institute of Standards and Technology (NIST, formerly the National Bureau of Standards) provides several soil and sediment standard reference materials (SRMs) for environmental radioactivity. These SRMs are certified for ^{60}Co, ^{90}Sr, ^{137}Cs, ^{226}Ra, ^{238}Pu, ^{239}Pu, ^{241}Am, and several other nuclides. The Department of Energy's Environmental Measurements Laboratory also provides quality assurance samples.

Soil, rock, and ore samples obtained from the Canadian Geological Survey are used for quality assurance of uranium and thorium determinations in silicate matrices. Our own in-house standards are prepared by adding known quantities of liquid NIST radioactivity SRMs to blank matrix materials.

3. Stable Constituents. Quality assurance for the stable constituent analysis program is maintained by analysis of certified or well-characterized environmental materials. The NIST has a large set of silicate, water, and biological SRMs. The EPA distributes

mineral analysis and trace analysis water standards. Rock and soil reference materials have been obtained from the CGS and the United States Geological Survey. Details of this program have been published elsewhere.[C4]

The analytical quality control program for a specific batch of samples is the combination of many factors. These include the "fit of the calibration," instrument drift, calibration of the instrument and/or reagents, recovery for SRMs, and precision of results.

4. Organic Constituents. Soil samples are received for the analysis of volatile and semivolatile organic compounds, pesticides, and herbicides for compliance work done under the Resource Conservation and Recovery Act. Certified matrix-based reference materials were not available for these analyses, so stock solutions of the analytes were prepared and spiked directly on blank soil by the quality assurance section. Because homogeneity of the sample could not be ensured, the entire sample was analyzed. Volatile organic compounds are analyzed by GC/MS and are spiked in the microgram-per-kilogram range.

The majority of water samples submitted during 1990 were environmental compliance samples for the analysis of pesticides, herbicides, volatile and semivolatile organic compounds, and polychlorinated biphenyls (PCBs). Methods were developed and refined for in-house preparation of quality control samples for volatile and semivolatile organic compounds in water.

Oil samples were received for the analysis of PCBs and organic solvents. The majority of these oils await disposal by the Laboratory's Waste Management Group (HSE-7) and include oil from decommissioned transformers. The remaining oil samples were environmental or industrial hygiene samples taken from areas of possible contamination.

Quality control samples for PCBs were prepared by diluting EPA standards or by preparing standards in hexane from the neat analyte. In the United States, the only PCBs that have been found in transformers have been PCBs 1242, 1254, and 1260. Samples submitted for analysis have contained only these PCBs, so they have been used to spike quality control samples. Vacuum pump oil was chosen for the oil base blank after an experiment with various brands of motor oil showed excessive matrix interferences.

5. Indicators of Accuracy and Precision. Accuracy is the degree of difference between average test results and true results when the latter are known or assumed. Precision is the degree of mutual agreement among replicate measurements (frequently assessed by calculating the standard deviation of a set of data points). Accuracy and precision are evaluated from results of analysis of reference materials. These results (r) are normalized to the known quality in the reference material to permit comparison among reference materials of a similar matrix containing different concentrations of the analyte:

$$r = \frac{\text{Reported quantity}}{\text{Known quantity}}.$$

A mean value R for all normalized analyses of a given type is calculated as follows for a given matrix type (N is total number of analytical determinations):

$$R = \frac{\sum_i r_i}{N},$$

Standard deviations of R are calculated assuming a normal distribution of the population of analytical determinations (N):

$$s = \sqrt{\frac{\sum_i \left(R - r_i\right)^2}{(N-1)}}.$$

These calculated values are presented as the HSE-9 "Ratio ± Std Dev" in Tables C-7 and C-8. The mean value of R is a measure of the accuracy of a procedure. Values of R greater than unity indicate a positive bias in the analysis; values less than unity, a negative bias.

The standard deviation is a measure of precision. Precision is a function of the concentration of analyte; that is, as the absolute concentration approaches the limit of detection, precision deteriorates. For instance, the precision for some determinations is quite large because many standards approach the limits

of detection of a measurement. We address this issue by calculating a new quality assurance parameter,

$$|\overline{X}_E - \overline{X}_C| < 1.96\sqrt{(S_E)^2 + (S_C)^2} \ ,$$

where X_E and X_c are the experimentally determined and certified or consensus mean elemental concentrations, respectively; and S_E and S_c are the standard deviations associated with X_E and X_c. An analysis will be considered under control when this condition is satisfied for a certain element in a given matrix. Details on this approach are presented elsewhere. The percentage of the tests for each parameter that fell within ±2 propagated standard deviations (under control), between ±2 and ±3 propagated standard deviations (warning level), or outside ±3 propagated standard deviations (out of control) is shown in Tables C-7 to C-21. A summary of the overall state of statistical control for analytical work done by HSE-9 is also provided in Table C-22.

Table C-23 summarizes recovery information on organic surrogate compounds required for use in the EPA-Contract Laboratory Program protocol. Table C-24 summarizes HSE-9's overall record of meeting EPA SW-846 holding times for HSE-8 samples during 1990. The data include all samples where holding times were missed and the customer elected to either resample or accept the data as usable. Table C-25 reports the incidence of false positive results for blank QC samples and false negative results for spiked QC samples at the 95% confidence level.

For most radiochemical and inorganic analyses, more than 90% are within ±2 propagated standard deviations of the certified/consensus mean values (under control). Our performance on all classes of inorganic matrices remained virtually unchanged since 1989, while improvement in radiochemical determinations in biological materials was observed. Unfortunately, our overall control of radiochemical analyses in soils and silicates declined over our 1989 record. This area will be the focus of increased quality assurance/quality control efforts in the future. Overall control on organic measurements in waters and silicates improved markedly over 1989 and now over 90% of all organic determinations are under control. Data on analytical detection limits are given in Table C-26.

Table C-1.
Method Summary (Organic Compounds)

Analyte	Matrix	Method[a]	Technique[b]
Volatile organic compounds	Air	—	GC/MS
	Soil	8260	PAT/GC/MS
SVOC's	Water	8260	PAT/GC/MS
	water	8270	
EP[c] toxicity	Soil	1310, 8080	GC/ECD
		8150	
PCBs	Water	606	GC/ECD
	Soil	8080	GC/ECD
	Oil	IH 320	GC/ECD
Semivolatile organic compounds	Soil and waste	625	GC/MS

10 PPB
10-20 PPB

[a]Industrial hygiene (IH).

[b]Gas chromatography (GC), purge and trap (PAT), electron capture detection (ECD), and mass spectrometry (MS).

[c]Extraction procedure (EP).

determined, and ash is submitted for analysis of ^{90}Sr, ^{137}Cs, total uranium, ^{238}Pu, and $^{239,240}Pu$.

6. Meteorological Monitoring.

Meteorological data were continuously gathered at four instrumented towers during 1991. Data taken include wind speed and direction, standard deviations of wind speed and direction, vertical wind speed and its standard deviation, air and soil temperature, relative humidity, solar and terrestrial radiation, precipitation, and sensible and evaporative heat fluxes (vertical transport). Each variable is measured every three seconds. A Dopper Acoustic Sodar is also located at a tower site. This instrument measures wind direction and speed, vertical wind speed, horizontal and vertical wind standard deviations, and inversion information at 30 m (99 ft) levels up to 750 m (2,475 ft). Finally, four additional sites monitor precipitation; one of these sites also measures temperature and relative humidity.

The tower and sodar data are averaged or summed over 15-minute intervals. Data are transmitted by phone line to a microcomputer at the OHL at TA-59. Charts from the four precipitation stations are picked up every week. Data validation of 15-minute data is accomplished with automated and manual screening techniques. Computer codes screen incoming data for reasonableness and consistency. Invalid data are discarded. Other codes produce daily plots for each tower and the sodar. These graphics are reviewed to provide an additional check of the data. This screening helps to detect problems with the instrumentation that might develop between calibrations. Most instruments are calibrated semiannually, including a thorough audit by an outside contractor once a year. The outside audit was performed in June 1991 (META 1991).

D. Analytical Chemistry

1. Methodology.

a. Introduction. Most analytical chemistry services are provided by the Laboratory's EM-9 Group. The EM-9 Sample Management Section functions as a working interface between the group and its customers. This section provides the sample collector with presampling information in the areas of sample containers, sample volumes, and sample preservation techniques. Collection of samples for chemical and radiochemical analyses follows a set procedure to ensure proper sample collection, documentation, submittal for chemical analysis, and posting of analytical results.

Before sample collection, the Sample Management Section discusses the schedule and procedures to be followed with the sample collector. The discussion includes

- number and type of samples;
- type of analyses and required limits of detection;
- proper sample containers;
- preparation of sample containers with preservative, if needed; and
- sample schedule to ensure minimum holding time of analyses to comply with EPA criteria.

All samples are delivered to Sample Management personnel and are then scheduled and processed for proper distribution and analysis. EM-9 assigns sample numbers to samples when submitted. Each number, representing a single sample, is assigned to a particular station and is entered into the collector's log book. The processing of samples includes (1) validating all samples for sampling correctness and integrity, (2) scheduling and labeling all samples for analysis, (3) initiating internal COC procedures for all samples, and (4) arranging for the proper disposal of any unused portions of samples.

After a sample is collected, it is delivered to the EM-9 Sample Management Section, where the pertinent information is entered into the EM-9 Laboratory Information Management System and the request is given a form number. The request form number is also entered in the collector's log book opposite sample numbers submitted, along with the date the sample was delivered to EM-9. EM-9 provides COC forms for the samples once they are received if COC was not started in the field. The date, time, temperature (if water), other pertinent information, and remarks are entered opposite the sample number and station previously listed in the log book. The sample container is labeled with station name, sample number, date, and preservative, if added.

The analytical request form contains the following information related to ownership and the sample program submitted: (1) requester, i.e., sample collector; (2) program code; (3) sample owner, i.e., program manager; (4) date; and (5) total number of samples. The second part of the request form contains (1) sample

number or numbers; (2) matrix, e.g., water; (3) types of analyses, i.e., specific radionuclide and/or chemical constituents; (4) technique, i.e., analytical method to be used for individual constituents; (5) analyst, i.e., chemist to perform analyses; (6) priority of sample or samples; and (7) remarks. One copy of the form goes to the collector for filing, and the other copies follow the sample.

The analytical results are returned to the sample collector, who posts data according to sample and station taken from the log book. These data sheets are included in the report and are used to interpret data for the report.

b. Radioactive Constituents. Environmental samples are routinely analyzed for the following radioactive constituents: gross alpha, beta, and gamma; isotopic plutonium; americium; uranium; cesium; tritium; and strontium. Detailed procedures have been published in this report in previous years (EPG 1990) and in the EM-9 Analytical Methods Manual (Gautier 1986). Occasionally, other radionuclides from specific sources are determined: ^{7}Be, ^{22}Na, ^{40}K, ^{51}Cr, ^{60}Co, ^{65}Zn, ^{83}Rb, ^{106}Ru, ^{134}Cs, ^{140}Ba, ^{152}Eu, ^{154}Eu, and ^{226}Ra. All but ^{226}Ra are determined by gamma-ray spectrometry on large germanium lithide detectors. Depending on the concentration and matrix, ^{226}Ra is measured by emanation or by gamma-ray spectrometry of its ^{214}Bi decay product. Uranium isotopic ratios ($^{235}U/^{238}U$) are measured by neutron activation analysis where precisions of ±5% are adequate. More precise work requires mass spectrometry. Uranium isotopic ratios are readily determined in environmental materials with precisions of 1%–2% relative standard deviation, at considerably reduced cost relative to neutron activations by inductively coupled plasma mass spectrometry (ICPMS).

c. Stable Constituents. A number of analytical methods are used for various stable isotopes. The choice of method is based on many criteria, including the operational state of the instruments, time limitations, expected concentrations in samples, quantity of sample available, sample matrix, and EPA regulations. Instrumental techniques available include neutron activation, atomic absorption, ion chromatography, color spectrophotometry (manual and automated), potentiometry, combustion analysis, ICPMS, and inductively coupled plasma atomic emission spectrometry. Standard chemical methods are also used for many of the common water quality tests. Atomic absorption capabilities include flame, furnace, cold vapor, and hydride generation, as well as flame emission spectrophotometry. The methods used and references for determination of various chemical constituents are presented elsewhere (Gautier 1986). In 1986, the EPA Region 6 administration granted EM-9 limited approval for alternative test procedures for uranium in drinking water (delayed neutron assay) and for chloride in drinking water and wastewater (flow injection without distillation). EPA approval for other modified methods is actively being sought. EM-9 is participating in the EPA-sponsored study to evaluate ICPMS for acceptance as an EPA-approved methodology.

d. Organic Constituents. Environmental soil and water samples are analyzed using EPA procedures outlined in EPA SW-846 (EPA 1989d) or modified procedures (Gautier 1986) that meet QA criteria outlined in Chapter One of SW-846, as shown in Table VIII-1. Methods used are supported by documented spike/recovery studies, method and field blanks, matrix spikes, surrogate spikes, and blind quality control samples. Volatile organics are analyzed using method 8260, SW-846. Tables D-21 and D-22 list volatile organics on the target list for water and soil samples, respectively. Semivolatile organics are analyzed using method 8270, SW-846. Table D-23 is the target list for semivolatile organics in water. Soil-gas (pore-gas) monitoring is performed by collecting organic vapors on charcoal, extracting the charcoal with CS_2 and analyzing the CS_2 extracts using gas chromatography/mass spectrometry (GC/MS). Soil-gas target compounds are listed in Table D-24, and the Toxicity Characteristics Leaching Procedure (TCLP) target compounds are listed in Table D-25.

Instrumentation available for organic analysis includes GC/flame ionization detector, GC/electron capture detector, GC/MS, high performance liquid with ultraviolet (UV) and refractive index detectors, a Fourier transform infrared spectrometer, and a UV/visible spectrophotometer. Sample preparation methods include: Soxhlet extraction, ultrasonic extraction, continuous liquid/liquid extraction, Kuderna Danish concentration, evaporative blowdown, and gel permeation chromatography clean-up of sample extracts.

Organic mixed waste analyses are performed for samples up to 100 nCi/g (solids/sludges) or 100 nCi/L (solutions) alpha, beta, or gamma. Higher level

Table VIII-1. Method Summary (Organic Compounds)

Analyte	Matrix	Method[a]	Technique[b]
Volatile organic compounds	Air	—	GC/MS
	Soil	8,240	PAT/GC/MS
	Water	8,240	PAT/GC/MS
TCLP[c] toxicity	Soil	1,311, 8,080 8,150,8240,8270	GC/ECD
PCBs	Water	608	GC/ECD
	Soil	8,270	GC/ECD
	Oil	IH 320	GC/ECD
Semivolatile organic compounds	Soil and waste	8270	GC/MS

[a]Industrial hygiene (IH).

[b]Gas chromatography (GC), purge and trap (PAT), electron capture detection (ECD), and mass spectrometry (MS).

[c]Toxicity Characteristic Leaching Procedure (TCLP).

samples are analyzed on a case-by-case basis. New methods are being developed for routine analysis of mixed waste greater than 100 nCi/g (or nCi/L). The Laboratory's capacity for mixed waste analyses will increase in the summer of 1992 when mixed waste analytical operations move to a dedicated facility.

2. Quality Evaluation Program.

a. Introduction. Control samples are analyzed in conjunction with the normal analytical chemistry workload. Such samples consist of several general types: calibration standards, reagent blanks, process blanks, matrix blanks, duplicates, spikes, and reference materials. Analysis of control samples fills two needs in analytical work: (1) it provides quality control over analytical procedures so that problems that might occur can be identified and corrected, and (2) data obtained from analysis of control samples permit evaluation of the capabilities of a particular analytical technique to determine a given element or constituent under a certain set of circumstances.

Blind QC samples are disguised and numbered to resemble unknown samples in a set, and no attempt is made to conceal the identity of the open QC samples from the analyst. In neither case are the concentrations of the analytes of interest revealed until after the data have been formally reported.

These samples are submitted to the laboratory at regular intervals and are analyzed in association with other samples; that is, they are not handled as a unique set of samples. At least 10% of stable constituent, organic, and selected radioactive constituent analyses are run as quality control samples using the materials described above. A detailed description of EM-9's QAP and a complete listing of results have been published annually since 1976 (Gautier 1991).

b. Radioactive Constituents. In addition to those that are prepared internally, QC and QA samples for radioactive constituents are obtained from outside agencies. The Quality Assurance Division of the Environmental Monitoring Systems Laboratory (EPA, Las Vegas) provides water, milk, and air filter samples for analysis of gross alpha, gross beta, H^3, ^{40}K, ^{60}Co, ^{65}Zn, ^{90}Sr, ^{106}Ru, ^{131}I, ^{134}Cs, ^{137}Cs, ^{226}Ra, and $^{239,240}Pu$ as part of an ongoing laboratory intercomparison program. NIST provides several soil and sediment standard reference materials (SRMs) for environmental radioactivity. These SRMs are certified for ^{60}Co, ^{90}Sr, ^{137}Cs, ^{226}Ra, ^{238}Pu, ^{239}Pu, ^{241}Am, and several other

nuclides. The DOE's Environmental Measurements Laboratory also provides quality assurance samples.

Soil, rock, and ore samples obtained from the Canadian Geological Survey (CGS) are used for quality assurance of uranium and thorium determinations in silicate matrices. EM-9's own in-house standards are prepared by adding known quantities of liquid NIST radioactivity SRMs to blank matrix materials.

c. Stable Constituents. Quality assurance for the stable constituent analysis program is maintained by analysis of certified or well-characterized environmental materials. The NIST has a large set of silicate, water, and biological SRMs. The EPA distributes mineral analysis and trace analysis water standards. Rock and soil reference materials have been obtained from the CGS and the United States Geological Survey. Details of this program have been published elsewhere (Gautier 1991). Stock solutions of inorganic analytes are prepared and spiked on blank matrices by the Quality Assurance Section.

The analytical quality control program for a specific batch of samples is the combination of many factors. These include the "fit of the calibration," instrument drift, calibration of the instrument and/or reagents, recovery for SRMs, and precision of results.

d. Organic Constituents. Soil samples are received for the analysis of volatile and semivolatile organic compounds, pesticides, and herbicides for compliance work done under RCRA. Certified matrix-based reference materials were not available for these analyses, so stock solutions of the analytes were prepared and spiked directly on blank soil by the Quality Assurance Section. Because homogeneity of the sample could not be ensured, the entire sample was analyzed. Volatile organic compounds are analyzed by GC/MS and are spiked in the microgram-per-kilogram range.

The majority of water samples submitted during 1991 were environmental compliance samples for the analysis of pesticides, herbicides, volatile and semivolatile organic compounds, and PCBs. Methods were developed and refined for in-house preparation of quality control samples for volatile and semivolatile organic compounds in water.

Oil samples were received for the analysis of PCBs and organic solvents. Quality control samples for PCBs were prepared by diluting EPA standards or by preparing standards in hexane from the neat analyte. In the United States, the only PCBs that have been found in transformers have been PCBs 1242, 1254, and 1260. Samples submitted for analysis have contained only these PCBs, so they have been used to spike quality control samples. Vacuum pump oil was chosen for the oil base blank after an experiment with various brands of motor oil showed excessive matrix interferences.

3. Data Handling of Radiochemical Samples.

Measurements of radiochemical samples require that analytical or instrumental backgrounds be subtracted to obtain net values. Thus, net values that are lower than the minimum detection limit of an analytical technique are sometimes obtained. Consequently, individual measurements can result in values of positive or negative numbers. Although a negative value does not represent a physical reality, a valid long-term average of many measurements can be obtained only if the very small and negative values are included in the population calculations (Gilbert 1975).

For individual measurements, uncertainties are reported as the standard deviation. These values are associated with the estimated variance of counting and indicate the precision of the counts.

Standard deviations for the station and group (regional, perimeter, and on site) means are calculated using the following equation:

$$s = \sqrt{\frac{\sum_{i=1}^{N} (\bar{c} - c_i)^2}{(N-1)}};$$

where

c_i = sample i,

$\bar{c}$ = mean of samples from a given station or group, and

N = number of samples comprising a station or group.

This value is reported as the uncertainty for the station and group means.

4. Indicators of Accuracy and Precision of Radiochemical Samples.

Accuracy is the degree of difference between average test results and true results when the latter are known or assumed. Precision is the degree of mutual agreement among replicate measurements (frequently assessed by calculating the standard deviation of a set of data points). Accuracy and precision are evaluated from results of analysis of reference materials. These results (r) are normalized to the known quality in the reference material to permit comparison among reference materials of a similar matrix containing different concentrations of the analyte:

$$r = \frac{\text{Reported quantity}}{\text{Known quantity}}.$$

A mean value R for all normalized analyses of a given type is calculated as follows for a given matrix type (N is total number of analytical determinations):

$$R = \frac{\sum_i r_i}{N}.$$

Standard deviations of R are calculated assuming a normal distribution of the population of analytical determinations (N):

$$s = \sqrt{\frac{\sum_i (R - r_i)^2}{(N-1)}}.$$

These calculated values are presented as the EM-9 "Ratio – Std Dev" in Tables D-26 to D-36. The mean value of R is a measure of the accuracy of a procedure. Values of R greater than unity indicate a positive bias in the analysis; values less than unity, a negative bias. The standard deviation is a measure of precision. Precision is a function of the concentration of analyte; that is, as the absolute concentration approaches the limit of detection, precision deteriorates. For instance, the precision for some determinations is quite good because many standards approach the limits of detection of a measurement. We address this issue by calculating a new quality assurance parameter,

$$|\overline{X}_E - \overline{X}_c|,$$

where X_E is the experimentally determined mean elemental concentration based on N measurements, and X_c is the certified or consensus mean elemental concentration. The total standard deviation, S_T, of $X_E - X_c$ is given by

$$S_r \sqrt{(S_E^2)\sqrt{N} + (S_C^2)},$$

where S_E is the standard deviation of a single experimentally determined measurement, and S_c is the standard deviation of the certified or consensus mean elemental concentration.

Analyses are considered under control if the absolute value of the difference between our result ($\overline{X}_E$) and the certified or consensus mean ($\overline{X}_c$) is within the propagated standard deviation of the experimental uncertainty (U_E) and of the certified mean (S_c). N is equal to the number of measurements on a sample and in our case is equal to 1. This concept is formulated in the following equation and is an adaptation of Dixon and Massey (Dixon 1969) to include the experimental uncertainty:

$$z = \frac{|\overline{X}_E - \overline{X}_c|}{\sqrt{(U_E)^2\sqrt{N} + (S_c)^2}}.$$

The test statistics used in this document are based on 5% and 0.2% levels of significance. The respective critical regions are defined using the z statistics 2 and 3. Data having a calculated z value ≤2 are accepted as in control at the 5% level of significance. Data that have a calculated z value >2 and ≤3.0 are considered at the warning level, or the 0.2% level of significance. Data

with a z value >3.0 are considered out of control. This criterion is also incorporated in the QACHECK computer program.

The percentage of the tests for each parameter where $X_E - X_C$ fell within ≤2 S_T (under control), between $2S_T$ and $3S_T$ (warning level), or outside $>3S_T$ (out of control) is shown in Tables D-26 to D-36. A summary of the overall state of statistical control for analytical work done by EM-9 is also provided in Table VIII-2.

Table VIII-3 summarizes recovery information on organic surrogate compounds required for use in the EPA-Contract Laboratory Program protocol. Table VIII-4 summarizes EM-9's overall record of meeting EPA SW-846 holding times for EM-9 samples during 1991. The data include all samples where holding times were missed and the customer elected to either resample or accept the data as usable.

Table D-37 reports the incidence of false positive results for blank QC samples and false negative results for spiked QC samples at the 95% confidence level.

For most radiochemical and inorganic analyses, more than 90% are within <2 propagated standard deviations of the certified/consensus mean values (under control). EM-9's performance on most classes of inorganic matrices remained virtually unchanged since 1990, while improvement in radiochemical determinations in soils was observed. Unfortunately, the overall control of radiochemical analyses in biological materials declined over the 1990 record as did that of stable elements in soils. These areas will be the focus of increased QA/QC efforts in the future. Overall control on organic measurements in all materials remained at over 90% with all organic determinations being under control. Data on analytical detection limits are given in Table D-38.

Table VIII-2. Overall Summary of EM-9 Quality Assurance Tests for 1991

Analysis	No. QC with CV[a]	Under Control <2z (%)	Warning 2–3z (%)	Out of Control >3z (%)
Stable Elements				
Biological Materials	4	75	25	—
Filters	13	100	—	—
Bulk Materials	18	100	—	—
Soil	1,263	82	8	10
Water	3,400	97	2	1
Radiochemical Elements				
Biologicals	67	76	11	13
Filters	168	97	2	1
Soils	475	89	8	3
Water	988	95	4	1
Organic Compounds				
Filters	268	92	6	2
Bulk Materials	284	98	1	1
Soil	4,621	95	1	4
Charcoal Tube	897	97	1	2
Water	3,008	96	1	3

[a]Quality control tests with certified values.

Table VIII-3. Summary of EM-9 Organic Surrogate Compliance with EPA SW-846 Criteria for 1991

Analysis	EPA SW-846 Range Low	EPA SW-846 Range High	Number of Surrogates In-Range	Number of Surrogates Total	% In-Range	% of Samples Run with Surrogate
Volatile Organic Compounds						
In Soil						
1,2-Dichloroethane d4	70	121	464	536	86.6	99.1
Toluene d8	81	117	501	536	93.5	99.1
4-Bromofluorobenzene	74	121	411	536	76.7	99.1
In Water						
1,2-Dichloroethane d4	76	114	178	213	83.6	100.0
Toluene d8	88	110	180	213	84.5	100.0
4-Bromofluorobenzene	86	115	171	213	80.3	100.0
Semivolatile Organic Compounds						
In Soil						
2-Fluorophenol	25	121	331	353	93.8	97.2
Phenol d6	24	113	346	362	95.6	99.7
Nitrobenzene d5	23	120	352	362	97.2	99.7
2-Fluorobiphenyl	30	115	351	362	97.0	99.7
2,4,6-Tribromophenol	19	122	346	362	95.6	99.7
p-Terphenyl d14	18	137	324	362	89.5	99.7
In Water						
2-Fluorophenol	21	100	145	173	83.8	95.1
Phenol d6	10	94	152	173	87.9	95.1
Nitrobenzene d5	35	114	147	173	85.0	95.1
2-Fluorobiphenyl	43	116	150	173	86.7	95.1
2,4,6-Tribromophenol	10	123	161	173	93.1	95.1
p-Terphenyl d14	33	141	141	173	81.5	95.1

Table VIII-4. EPA SW-846 Holding Time Summary for 1991

Organic Analysis Type	Number Meeting EPA Criteria	Total Number Performed	% Within EPA Criteria
Extraction holding times			
Volatiles in soils	363	419	86.6
Volatiles in waters	125	141	88.7
Semivolatiles in soils	274	282	97.2
Semivolatiles in waters	111	133	83.5
Pesticides in soils	29	35	82.9
Pesticides in waters	3	3	100.0
Herbicides in waters	3	3	100.0
PCBs in soils	134	221	60.6
PCBs in waters	35	72	48.6
Instrument analysis holding times			
Volatiles in soils	419	419	100.0
Volatiles in waters	141	141	100.0
Semivolatiles in soils	282	282	100.0
Semivolatiles in waters	133	133	100.0
Pesticides in soils	35	35	100.0
Pesticides in waters	3	3	100.0
Herbicides in waters	3	3	100.0
PCBs in soils	147	221	66.5
PCBs in waters	72	72	100.0

All sludge samples are spiked with radionuclides which are traceable to NIST standards - ^{232}U, ^{242}Pu, ^{243}Am prior to analysis. The percent recovery of these tracers give a reliable means of determining chemical yield and instrumental efficiency which are used to calculate the ^{235}U, ^{234}U, ^{239}Pu, ^{238}Pu and ^{243}Am present in the sludge samples. This method is more reliable than an external quality control standard which would not duplicate the sludge matrix in every sample.

Terry D. Fuller

PERFORMANCE EVALUATION REPORT DATE: 07/15/87

DMR-QA STUDY NUMBER 007 rec'd 9/8/87

PERMITTEE: NM0028355 DOE-LOS ALAMOS NATIONAL LABORATORY FX

ANALYTES	V P	REPORT VALUE	TRUE VALUE*	ACCEPTANCE LIMITS	WARNING LIMITS	PERFORMANCE EVALUATION
TRACE METALS IN MICROGRAMS PER LITER:						
CADMIUM		449	445	378.- 501.	393.- 486.	ACCEPTABLE
CHROMIUM		16.7	191	154.- 227.	163.- 218.	NOT ACCEPTABLE
COPPER		488	492	440.- 536.	452.- 524.	ACCEPTABLE
IRON		1910	1852	1600.-2060.	1660.-2010.	ACCEPTABLE
LEAD		450	392	331.- 450.	346.- 435.	CHECK FOR ERROR
MERCURY		4.68	4.55	3.09- 6.09	3.47- 5.71	ACCEPTABLE
ZINC		1680	1656	1440.-1820.	1490.-1780.	ACCEPTABLE
MISCELLANEOUS ANALYTES:						
PH-UNITS		8.58	8.50	8.04- 8.89	8.15- 8.79	ACCEPTABLE
TOTAL SUSPENDED SOLIDS (IN MG/L)		16.6	25.1	16.4- 28.0	17.8- 26.6	CHECK FOR ERROR
NUTRIENTS IN MILLIGRAMS PER LITER:						
AMMONIA-NITROGEN		4.88	5.10	4.09- 6.01	4.32- 5.78	ACCEPTABLE

* BASED UPON THEORETICAL CALCULATIONS, OR A REFERENCE VALUE WHEN NECESSARY.

PERFORMANCE EVALUATION REPORT DATE: 07/15/87

DMR-QA STUDY NUMBER 007

PERMITTEE: NM0028355 DOE-LOS ALAMOS NATIONAL LABORATORY FX

ANALYTES	V P	REPORT VALUE	TRUE VALUE*	ACCEPTANCE LIMITS	WARNING LIMITS	PERFORMANCE EVALUATION
NUTRIENTS IN MILLIGRAMS PER LITER:						
TOTAL PHOSPHORUS		0.787	0.844	.655- 1.06	.704- 1.01	ACCEPTABLE
DEMANDS IN MILLIGRAMS PER LITER:						
COD		138	148	113.- 171.	120.- 164.	ACCEPTABLE
ADDITIONAL MISCELLANEOUS ANALYTES:						
TOTAL CYANIDE (IN MG/L)		0.180	0.225	.110- .298	.134- .274	ACCEPTABLE
TOTAL RESIDUAL CHLORINE (IN MG/L)		0.29	0.261	.0624- .492	.124- .430	ACCEPTABLE

* BASED UPON THEORETICAL CALCULATIONS, OR A REFERENCE VALUE WHEN NECESSARY.

Hamilton

Los Alamos
Los Alamos National Laboratory
Los Alamos, New Mexico 87545

DATE: September 20, 1987
IN REPLY REFER TO: HSE-9/87-389
MAIL STOP: K484
TELEPHONE: (505)667-3269

Mr. Alex Puglisi
Environmental Improvement Division
Surface Water Quality Bureau
Surface Water Section
P. O. Box 968
Santa Fe, NM 87504-0968

RE: 1987 National Discharge Monitoring Report Quality Assurance Program

Dear Mr. Puglisi:

Our chromium results were reported without the 10 fold dilution factor. The actual result was 167 ug/L. We are presently implementing a cross-checking system to eliminate these types of bookkeeping errors. Shortly after these analyses were completed we discovered an improperly prepared commercial lead standard. This undoubtedly accounts for the somewhat high lead result. We are making a conscientious effort to analyze each new standard against the old standard and against another commercial lot (i.e. Fisher vs Spex). Unfortunately many of the metals we analyze are not available from NBS.

The low, but within range, results for total suspended solids may be the result of poor sample preparation or mixing. The error is not obvious. It does point out the need for tighter quality control. We analyze about one sample per week for TSS. We can order only one TSS control sample at a time from EPA and it must be analyzed within seven days after dilution. This is an ordering hassle and a drain on the EPA supply. We are requesting sample preparation instructions from EPA so that we can run in-house prepared QC's in conjunction with EPA QC's routinely.

Sincerely,

Mary Carol Williams

Mary Carol Williams
Wastewater Analysis Section Leader
Health and Environmental Chemistry

MCW/mr
(wp\mcw\puglisi)

cy: HSE-DO
CRM-4
file

Table III. PERFORMANCE EVALUATION REPORT DATE: 7/12/88

DMR-QA STUDY NUMBER 008

PERMITTEE: NM0028355 DOE-LOS ALAMOS NATIONAL LABORATORY FX

ANALYTES	V P	REPORT VALUE	TRUE VALUE*	ACCEPTANCE LIMITS	WARNING LIMITS	PERFORMANCE EVALUATION
TRACE METALS IN MICROGRAMS PER LITER:						
CADMIUM		260	270	240.- 311.	249.- 302.	ACCEPTABLE
CHROMIUM		81.6	89.2	64.6- 109.	70.1- 104.	ACCEPTABLE
COPPER		100	100	86.7- 112.	89.8- 108.	ACCEPTABLE
IRON		793	763	664.- 854.	705.- 833.	ACCEPTABLE
LEAD		982	914	781.-1050.	815.-1020.	ACCEPTABLE
MERCURY		.830	0.936	.478- 1.39	.594- 1.28	ACCEPTABLE
ZINC		1292	1270	1090.-1430.	1140.-1390.	ACCEPTABLE
MISCELLANEOUS ANALYTES:						
PH-UNITS		6.30	6.30	6.13- 6.43	6.17- 6.40	ACCEPTABLE
TOTAL SUSPENDED SOLIDS (IN MG/L)		34.0	34.8	24.7- 45.0	27.2- 42.5	ACCEPTABLE
NUTRIENTS IN MILLIGRAMS PER LITER:						
AMMONIA-NITROGEN		9.91	10.3	8.42- 12.0	8.84- 11.6	ACCEPTABLE

* BASED UPON THEORETICAL CALCULATIONS, OR A REFERENCE VALUE WHEN NECESSARY.

PERFORMANCE EVALUATION REPORT

DATE: 7/12/88

DMR-QA STUDY NUMBER 008

PERMITTEE: NM0028355 DOE-LOS ALAMOS NATIONAL LABORATORY FX

ANALYTES	V P	REPORT VALUE	TRUE VALUE*	ACCEPTANCE LIMITS	WARNING LIMITS	PERFORMANCE EVALUATION
NUTRIENTS IN MILLIGRAMS PER LITER:						
TOTAL PHOSPHORUS		3.38	4.40	3.52- 5.11	3.71- 4.92	NOT ACCEPTABLE
DEMANDS IN MILLIGRAMS PER LITER:						
COD		102	105	79.6- 120.	84.7- 115.	ACCEPTABLE
ADDITIONAL MISCELLANEOUS ANALYTES:						
TOTAL CYANIDE (IN MG/L)		0.126	0.155	.0845- .207	.0999- .192	ACCEPTABLE
TOTAL RESIDUAL CHLORINE (IN MG/L)		0.346	0.399	.189- .615	.250- .554	ACCEPTABLE

* BASED UPON THEORETICAL CALCULATIONS, OR A REFERENCE VALUE WHEN NECESSARY.

PERFORMANCE EVALUATION REPORT

DATE: 7/ 3/89

DMR-QA STUDY NUMBER 009

PERMITTEE: NM0028355 DOE-LOS ALAMOS NATIONAL LABORATORY FX

ANALYTES	V P	REPORT VALUE	TRUE VALUE*	ACCEPTANCE LIMITS	WARNING LIMITS	PERFORMANCE EVALUATION
TRACE METALS IN MICROGRAMS PER LITER:						
CADMIUM		00340	320	277- 375	289- 363	ACCEPTABLE
CHROMIUM		00138	150	118- 179	125- 171	ACCEPTABLE
COPPER		00078	76.2	65.4- 86.0	67.9- 83.4	ACCEPTABLE
IRON		00748	749	652- 859	678- 833	ACCEPTABLE
LEAD		100	91.9	71.5- 115	77.0- 110	ACCEPTABLE
MERCURY		0.68	0.853	.457- 1.23	.554- 1.13	ACCEPTABLE
ZINC		215	210	181- 237	188- 230	ACCEPTABLE
MISCELLANEOUS ANALYTES:						
PH-UNITS		07.86	7.80	7.55- 7.97	7.60- 7.92	ACCEPTABLE
TOTAL SUSPENDED SOLIDS (IN MG/L)		040.5	41.9	33.3- 46.6	34.9- 45.0	ACCEPTABLE
NUTRIENTS IN MILLIGRAMS PER LITER:						
AMMONIA-NITROGEN		013.5	13.0	10.2- 15.5	10.9- 14.9	ACCEPTABLE

* BASED UPON THEORETICAL CALCULATIONS, OR A REFERENCE VALUE WHEN NECESSARY.

PERFORMANCE EVALUATION REPORT DATE: 7/ 3/89

DMR-QA STUDY NUMBER 009

PERMITTEE: NM0028355 DOE-LOS ALAMOS NATIONAL LABORATORY TX

ANALYTES	VP	REPORT VALUE	TRUE VALUE*	ACCEPTANCE LIMITS	WARNING LIMITS	PERFORMANCE EVALUATION
NUTRIENTS IN MILLIGRAMS PER LITER:						
TOTAL PHOSPHORUS		05.99	7.01	5.60- 8.38	5.93- 8.05	ACCEPTABLE
DEMANDS IN MILLIGRAMS PER LITER:						
COD		091.0	91.7	74.4- 109	78.8- 105	ACCEPTABLE
5-DAY BOD		067.6	59.7	41.7- 85.7	47.2- 80.3	ACCEPTABLE
ADDITIONAL MISCELLANEOUS ANALYTES:						
TOTAL CYANIDE (IN MG/L)		0.063	0.070	.0300-.0998	.0388-.0910	ACCEPTABLE

* BASED UPON THEORETICAL CALCULATIONS, OR A REFERENCE VALUE WHEN NECESSARY.

PERFORMANCE EVALUATION REPORT

DATE: 7/ 6/90

DMR-QA STUDY NUMBER 010

PERMITTEE: NM0028355 DOE-LOS ALAMOS NATIONAL LAB FX

ANALYTES	V P	REPORT VALUE	TRUE VALUE*	ACCEPTANCE LIMITS	WARNING LIMITS	PERFORMANCE EVALUATION
TRACE METALS IN MICROGRAMS PER LITER:						
ALUMINUM	X	1315	1200	949- 1440	1010- 1380	ACCEPTABLE
ARSENIC	X	32.7	30.0	20.6- 37.6	22.7- 35.5	ACCEPTABLE
BERYLLIUM	X	77.8	75.6	63.4- 87.3	66.4- 84.3	ACCEPTABLE
CADMIUM		297	300	244- 343	257- 331	ACCEPTABLE
CHROMIUM		750	50.0	37.2- 61.0	40.2- 58.0	NOT ACCEPTABLE
COBALT	X	50.2	750	651- 851	677- 825	NOT ACCEPTABLE
COPPER		86.5	85.0	72.9- 94.5	75.6- 91.8	ACCEPTABLE
IRON		662	650	559- 737	581- 715	ACCEPTABLE
LEAD		6.79	100	76.0- 121	81.5- 115	NOT ACCEPTABLE
ANGANESE	X	203	200	178- 217	183- 212	ACCEPTABLE
ERCURY		6.79	7.00	5.19- 8.74	5.64- 8.30	ACCEPTABLE
NICKEL	X	205	200	172- 227	179- 220	ACCEPTABLE

* BASED UPON THEORETICAL CALCULATIONS, OR A REFERENCE VALUE WHEN NECESSARY.

PERFORMANCE EVALUATION REPORT

DATE: 7/ 6/90

DMR-QA STUDY NUMBER 010

PERMITTEE: NM0028355 DOE-LOS ALAMOS NATIONAL LAB FX

ANALYTES	V P	REPORT VALUE	TRUE VALUE*	ACCEPTANCE LIMITS	WARNING LIMITS	PERFORMANCE EVALUATION
TRACE METALS IN MICROGRAMS PER LITER:						
SELENIUM	X	68	70.0	47.8- 81.1	52.0- 77.0	ACCEPTABLE
VANADIUM	X	1210	1150	995- 1300	1040- 1260	ACCEPTABLE
ZINC		850	900	783- 1000	810- 976	ACCEPTABLE
MISCELLANEOUS ANALYTES:						
PH-UNITS		6.05	6.00	5.86- 6.12	5.89- 6.09	ACCEPTABLE
TOTAL SUSPENDED SOLIDS (IN MG/L)		79.4	73.0	61.3- 78.0	63.3- 75.9	NOT ACCEPTABLE
OIL AND GREASE (IN MG/L)	X	14.2	18.0	10.6- 23.2	12.2- 21.7	ACCEPTABLE
NUTRIENTS IN MILLIGRAMS PER LITER:						
AMMONIA-NITROGEN		3.45	3.60	2.80- 4.34	2.99- 4.16	ACCEPTABLE
ITRATE-NITROGEN	X	2.1	2.20	1.73- 2.67	1.85- 2.56	ACCEPTABLE
OTAL PHOSPHORUS		7.25	9.00	6.91- 10.5	7.34- 10.1	CHECK FOR ERROR
ORTHOPHOSPHATE	X	3.81	4.50	3.91- 5.10	4.05- 4.96	NOT ACCEPTABLE

* BASED UPON THEORETICAL CALCULATIONS, OR A REFERENCE VALUE WHEN NECESSARY.

PERFORMANCE EVALUATION REPORT

DATE: 7/ 6/90

DMR-QA STUDY NUMBER 010

PERMITTEE: NM0028355 DOE-LOS ALAMOS NATIONAL LAB FX

ANALYTES	V P	REPORT VALUE	TRUE VALUE*	ACCEPTANCE LIMITS	WARNING LIMITS	PERFORMANCE EVALUATION
DEMANDS IN MILLIGRAMS PER LITER:						
COD		71	76.2	58.3- 93.6	62.7- 89.2	ACCEPTABLE
5-DAY BOD		56.6	50.9	29.1- 72.8	34.5- 67.4	ACCEPTABLE
ADDITIONAL MISCELLANEOUS ANALYTES:						
TOTAL CYANIDE (IN MG/L)		0.045	0.055	.0191-.0791	.0267-.0715	ACCEPTABLE
TOTAL RESIDUAL CHLORINE (IN MG/L)	X	1.41	1.50	0.896- 1.82	1.02- 1.70	ACCEPTABLE

* BASED UPON THEORETICAL CALCULATIONS, OR A REFERENCE VALUE WHEN NECESSARY.

DATE: March 20,, 1990
IN REPLY REFER TO: HSE-9/90
MAIL STOP: K484
TELEPHONE: (505)667-4709
FTS 843-3269

Mr. Glenn Saums
Environmental Improvement Division
Surface Water Quality Bureau
Surface Water Section
P.O. Box 968
Santa Fe, NM 87504-0968

Dear Mr. Saums:

The inorganic section of the Health and Environmental Chemistry Group at Los Alamos National Laboratory participated in National Pollutant Discharge Elimination System Study 10 and analyzed for those pollutants specified in our NPDES permit No. NM0028355. Our results were out of acceptance limits for chromium, cobalt, lead, total suspended solids, and orthophosphate.

Results from Study 10 that were rated "unacceptable" were investigated and the following conclusions were made. The chromium, cobalt, and lead results were all transciption errors made when the NPDES form was filled out. All analytical data as reported by the analysts were acceptable. The analysts reported 750 µg/L for cobalt, 50.2 µg/L for chromium, and 96.6 µg/L for lead as shown on the analytical reports enclosed.

The analyst reported the second of two numbers for orthophosphate. The first analysis was too high for the calibration curve and needed dilution. The second number was slightly low 3.81 µg/L (acceptable range was 3.91 - 5.10 µg/L).

The total suspended solids sample was run twice and all of the sample was consumed. The analyst reported the higher value 79.4 ± 8 µg/L. The other value was 74 ± 7 µg/L and was in the acceptable range (61.3 - 78.0).

Additional information is attached to this letter.

Sincerely yours,

Peggy Gautier, Section Leader
Quality Assurance and Data Management
Health and Environmental Chemistry Group

PERFORMANCE EVALUATION REPORT

DATE: 7/15/91

DMR-QA STUDY NUMBER 011

PERMITTEE: NM0028355 DOE-LOS ALAMOS NATIONAL LABORATORY FX

ANALYTES	V P	REPORT VALUE	TRUE VALUE*	ACCEPTANCE LIMITS	WARNING LIMITS	PERFORMANCE EVALUATION
TRACE METALS IN MICROGRAMS PER LITER:						
ALUMINUM		920	870	720- 999	755- 964	ACCEPTABLE
ARSENIC		80	69.9	55.5- 82.8	58.9- 79.4	CHECK FOR ERRO
BERYLLIUM		15	11.1	7.73- 14.7	8.63- 13.8	NOT ACCEPTABLE
CADMIUM		5	5.07	3.42- 6.82	3.85- 6.40	ACCEPTABLE
CHROMIUM		76	74.0	56.7- 90.2	60.8- 86.0	ACCEPTABLE
COBALT		810	815	706- 915	733- 888	ACCEPTABLE
COPPER		42	43.0	34.9- 50.2	36.8- 48.3	ACCEPTABLE
IRON		360	340	293- 391	305- 379	ACCEPTABLE
LEAD		320	320	271- 369	283- 357	ACCEPTABLE
ANGANESE		420	420	385- 460	394- 451	ACCEPTABLE
ERCURY		0.55	0.543	0.246-0.903	0.329-0.820	ACCEPTABLE
NICKEL		1700	1600	1420- 1770	1460- 1720	ACCEPTABLE
SELENIUM	<	50	10.0	5.92- 13.1	6.82- 12.2	UNUSABLE DATA
VANADIUM		2000	2000	1760- 2240	1820- 2180	ACCEPTABLE
ZINC		1900	1900	1670- 2110	1720- 2060	ACCEPTABLE

Study 11

MISCELLANEOUS ANALYTES:

PH-UNITS	9.07	8.80	8.46- 9.24	8.55- 9.14	ACCEPTABLE
TOTAL SUSPENDED SOLIDS (IN MG/L)	60.0	63.3	46.1- 67.2	48.7- 64.5	ACCEPTABLE
OIL AND GREASE (IN MG/L)	13.1	13.0	6.48- 17.7	7.88- 16.3	ACCEPTABLE

NUTRIENTS IN MILLIGRAMS PER LITER:

AMMONIA-NITROGEN	17.5	18.0	14.4- 21.3	15.2- 20.4	ACCEPTABLE
NITRATE-NITROGEN	8.40	8.00	6.47- 9.52	6.83- 9.15	ACCEPTABLE
TOTAL PHOSPHORUS	3.56	3.60	2.84- 4.28	3.02- 4.11	ACCEPTABLE
ORTHOPHOSPHATE	1.21	1.40	1.15- 1.63	1.20- 1.57	ACCEPTABLE

---

* BASED UPON THEORETICAL CALCULATIONS, OR A REFERENCE VALUE WHEN NECESSARY.

PERFORMANCE EVALUATION REPORT DATE: 7/15/91

DMR-QA STUDY NUMBER 011

PERMITTEE: NM0028355 DOE-LOS ALAMOS NATIONAL LABORATORY FX

ANALYTES	V P	REPORT VALUE	TRUE VALUE*	ACCEPTANCE LIMITS	WARNING LIMITS	PERFORMANCE EVALUATION
DEMANDS IN MILLIGRAMS PER LITER:						
COD		51.0	46.6	32.5- 57.1	35.6- 54.0	ACCEPTABLE
5-DAY BOD		41.8	30.0	15.8- 44.2	19.3- 40.6	CHECK FOR ERRO
ADDITIONAL MISCELLANEOUS ANALYTES:						
TOTAL CYANIDE (IN MG/L)		0.024	0.020	D.L.-.0352	.0020-.0304	ACCEPTABLE
TOTAL RESIDUAL CHLORINE (IN MG/L)	X	1.71	2.00	1.27- 2.25	1.40- 2.12	ACCEPTABLE

* BASED UPON THEORETICAL CALCULATIONS, OR A REFERENCE VALUE WHEN NECESSARY.
D.L. STANDS FOR DETECTION LIMIT

Los Alamos
Los Alamos National Laboratory
Los Alamos, New Mexico 87545

DATE: October 7, 1991
IN REPLY REFER TO: EM-9/91-120
MAIL STOP: K484
TELEPHONE: (505)667-6235
FTS 843-6235

Mr. Alex A. Puglisi
DMR QA State Coordinator
New Mexico Environment Division
Surface Water Quality Bureau
1190 St. Francis Drive
Santa Fe, NM 87502

Dear Mr. Puglisi:

The inorganic section of the Health and Environmental Chemistry Group at Los Alamos National Laboratory participated in National Pollutant Discharge Elimination System Study 11 and analyzed for those pollutants specified in our NPDES permit No. NM0028355. Our results were out of acceptance limits for beryllium, and selenium data was rated as unusable.

Results from Study 11 that were rated "unacceptable" were investigated and the following conclusions were made. No reason was found for the slightly high beryllium result but the dilution process is being investigated further. The EM-9 result was 15 mg/L and the acceptable range was 7.73 - 14.7. All in-house QC samples for beryllium were within control limits.

The selenium result rated as "unusable data" was analyzed by ICPAES due to personnel shortages. The ICPAES procedure does not have a low enough detection limit for selenium. Selenium will be analyzed by AA in the future.

Sincerely yours,

Peggy Gautier

Peggy Gautier, Section Leader
Quality Assurance and Data Management
Health and Environmental Chemistry Group

PG/lv
(wp/peg/qastat.cor)

Cy: EM-DO, MS-K491
CRM-4, MS-A150
EM-9 file, MS-K484
Mike Saladen, EM-8, MS-K490

An Equal Opportunity Employer/Operated by the University of California