General

LA-8951-MS

LIBRARY COPY

ENTERED

Los Alamos National Laboratory is operated by the University of California for the United States Department of Energy under contract W-7405-ENG-36.

Sampling Soils for ^{137}Cs Using Various Field Sampling Volumes

12182

Los Alamos

Los Alamos National Laboratory
Los Alamos, New Mexico 87545

LA-8951-MS

UC-11
Issued: October 1981

Sampling Soils for ^{137}Cs Using Various Field Sampling Volumes

J. W. Nyhan
T. G. Schofield
G. C. White
G. Trujillo

Los Alamos
Los Alamos National Laboratory
Los Alamos, New Mexico 87545

SAMPLING SOILS FOR ^{137}Cs USING VARIOUS FIELD SAMPLING VOLUMES

by

J. W. Nyhan, T. G. Schofield, G. C. White, and G. Trujillo

ABSTRACT

The sediments from a liquid effluent receiving area at the Los Alamos National Laboratory and soils from an intensive study area in the fallout pathway of Trinity were sampled for ^{137}Cs using 25-, 500-, 2500-, and 12 500-cm^3 field sampling volumes. A highly replicated sampling program was used to determine mean concentrations and inventories of ^{137}Cs at each site, as well as estimates of spatial, aliquoting, and counting variance components of the radionuclide data. The sampling methods were also analyzed as a function of soil size fractions collected in each field sampling volume and of the total cost of the program for a given variation in the radionuclide survey results.

Coefficients of variation (CV) of ^{137}Cs inventory estimates ranged from 0.063 to 0.14 for Mortandad Canyon sediments, whereas CV values for Trinity soils were observed from 0.38 to 0.57. Spatial variance components of ^{137}Cs concentration data were usually found to be larger than either the aliquoting or counting variance estimates and were inversely related to field sampling volume at the Trinity intensive site. Subsequent optimization studies of the sampling schemes demonstrated that each aliquot should be counted once, and that only 2 to 4 aliquots out of as many as 30 collected need be assayed for ^{137}Cs. The optimization studies showed that as sample costs increased to 45 man-hours of labor per sample, the variance of the mean ^{137}Cs concentration decreased dramatically, but decreased very little with additional labor.

I. INTRODUCTION

A soil sampling and analysis program provides the most direct means of determining the concentration, inventory, and distribution of radionuclides in the environs of nuclear facilities. Soil sampling programs are important in a facility's preoperational monitoring program, serving to establish accurate baseline concentrations of radionuclides, and are necessary later for the evaluation of environmental contamination resulting from accidental and operational releases. Radioecological research programs also need reliable estimates of radionuclide concentrations in soil and sediment samples to establish relationships between radionuclides in soils and in other ecosystem components at various times.

In spite of the common field observation that radionuclides generally have a very heterogeneous distribution in soil samples (Fowler and Essington 1977; Essington and Fowler 1977), very little is known about the influence of field sampling volume on soil radionuclide concentration variability. Areas of different sizes contaminated with various radionuclide source terms in the field are commonly sampled with little regard to the volume of sample collected, the size of aliquot to be analyzed for radionuclides, and the cost of the soil sampling program relative to the statistical precision

needed in the final survey results. Thus, a casual survey of soil sampling programs with various missions shows Lawrence Livermore Laboratory sampling 8966 cm^3 of soil (Anonymous 1972), Savannah River personnel collecting 2260 cm^3 of soil (McLendon 1975), Health and Safety Laboratory personnel using field sampling volumes of 3112 cm^3 (Harley 1972), and Nevada Test Site scientists sampling either 250 or 615 cm^3 of soil (Fowler et al. 1976). Field sampling volumes seem to range in size from 25 cm^3 (Nyhan and Hakonson 1976; Hakonson et al. 1973) to 78 000 cm^3 (Hawkins and Foster 1963).

This study was designed to determine the influence of field sampling volume on the distribution of ^{137}Cs in sediments from a radioactive liquid effluent receiving area (soluble radionuclide source term) and in soil samples collected in a nuclear fallout pathway (particulate radionuclide source term). Field sampling volumes at these sites were selected to represent volumes of soil commonly sampled by a 2.5-cm-diam core (25 cm^3), an international nuclear fallout sampling technique using a 500-cm^3 sample (Hanson 1976), a commonly used fallout sampling technique of the US Environmental Protection Agency (EPA) with a 2500-cm^3 sample (Bernhardt 1976), and an arbitrarily chosen sampling volume five times larger than the EPA's sampling technique. The ^{137}Cs concentration data were then examined as functions of soil particle size distributions of each field sampling volume and sampling program costs for a given statistical precision in the survey results.

II. MATERIALS AND METHODS

Sediment samples were collected during September 1976 in an intermittent stream channel in Mortandad Canyon at the Los Alamos National Laboratory in north central New Mexico. This study site is located about 2.5 km from a liquid waste treatment effluent outfall in a portion of the stream channel that is normally dry except during storm runoff events. The sandy alluvium of volcanic parent materials and other site characteristics pertaining to the site's soils, radioecology and hydrology, and the nature of the liquid industrial wastes added to the canyon were described previously (Hakonson et al. 1973; Hakonson et al. 1976; Miera et al. 1977; Nyhan et al. 1978a; Nyhan and Hakonson 1976; Nyhan et al. 1978b; and Nyhan et al. 1976b).

Samples were also collected in November 1976 at the Trinity study site, located in south central New Mexico on the Chupadera Mesa, 44 km northeast of Trinity Site, where the world's first atomic detonation occurred on July 16, 1945. The Rance loam at this study area was previously described (Nyhan et al. 1976a), as well as its climatological, vegetative, and radioecological characteristics (Hakonson and Nyhan 1979).

The soil samples were collected using a metal template to ensure consistency in the sampling method. The template, divided into the four different sample sizes shown in Table I, was laid on the soil surface and the cutting edges driven to a depth of 5 cm. The soil inside each of the four compartments of the template was removed and bagged; the template was then brushed clean and moved to the next sampling location. At the Mortandad Canyon site the sediment samples were collected in the middle of the stream channel with the 10 sampling locations located approximately 1 m apart. Soils were collected on the Chupadera Mesa in a similar fashion.

The sampled sediments and soils were weighed immediately after collection and oven dried for 72 h at 110°C. Wet and dry weights were recorded so that gravimetric soil water determinations and bulk density calculations could be performed for each sample. Particle size distribution assays were also performed, using previously described techniques (Nyhan et al. 1976a).

The two largest template compartments produced such large volumes of soil (with corresponding soil weights of approximately 19 kg, and 3 kg, respectively) that thorough mixing seemed necessary to ensure a fairly even distribution of activity throughout the soil. A twin shell blender was used for mixing these samples and, because the soil from these large samples would not fit into the blender at one time, a scheme was devised to ensure that all sample aliquots were equally mixed (Fig. 1). The scheme involved mixing sample aliquots for 7 min

TABLE I. Dimensions of Template Used to Collect Soil Samples.

Template Volume (cm^3)	Length (cm)	Width (cm)	Depth (cm)
25	5	1	5
500	10	10	5
2500	25	20	5
12 500	50	50	5

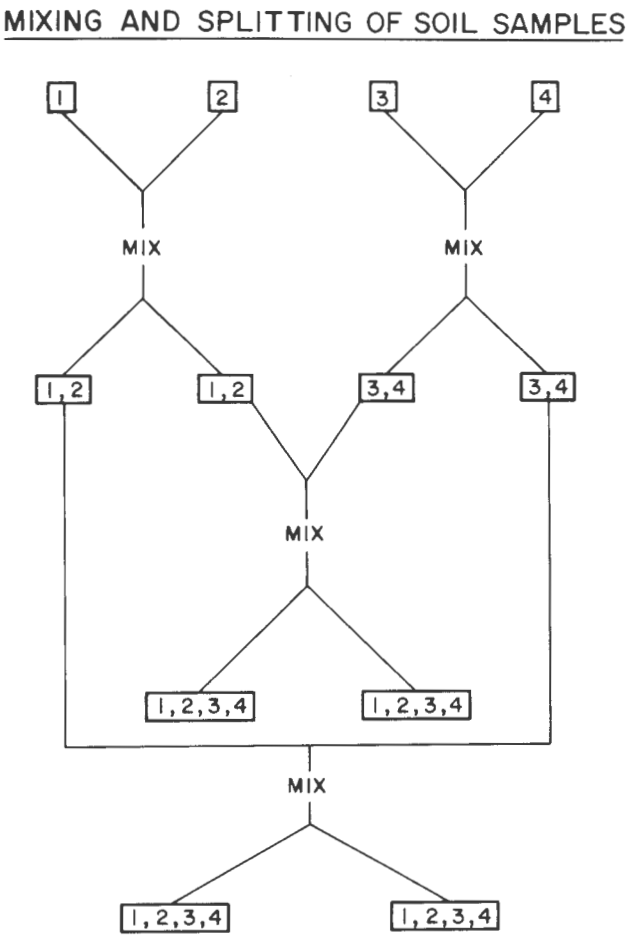

Fig. 1. Mixing and splitting scheme for soil samples.

and using a Riffle Sample Splitter to randomly split the mixed sample aliquot.

All samples, regardless of size, were analyzed for ^{137}Cs in 500-cm^3 polyethylene bottles. For the two largest sample sizes, this meant putting the soil into several bottles and counting them separately on a 10- by 20-cm NaI(Th) detector and a Canberra 8100 multichannel analyzer for a sufficient time to yield an error of less than 1%. Because samples of varying sizes had to be analyzed to assay all the soil collected at each sampling location, a set of ^{137}Cs standard was prepared with ^{137}Cs-spiked soil in heights ranging from 1.0 to 13.5 cm to determine counting efficiency for each sample as a function of sample height. Cesium concentrations (pCi/g) were then calculated for each sample aliquot and for each total sample. Cesium inventories were calculated by dividing the total ^{137}Cs activity (pCi) in each total sample by the respective area (cm^2) sampled by the template at the sampling location.

Several statistical analyses were performed on the ^{137}Cs data from both study sites. The Kolmogorov-Smirnov One-Sample test was used to test ^{137}Cs concentrations for goodness of fit to both normal and lognormal probability density functions (Snedecor and Cochran 1967). Regression analysis of the ^{137}Cs concentration data from individual sample volumes was used to determine if various field sampling volumes gave different estimates of cesium concentrations. Aliquoting variability of ^{137}Cs concentrations was determined for all the aliquots collected in the two largest sampling volumes at each intensive study site using Analysis of Variance (ANOVA) tests (Snedecor and Cochran 1967). Finally, an optimization study was performed on all the ^{137}Cs data for each study site, partitioning the total radionuclide variation into counting, aliquoting, and spatial variation, and taking into account the costs (in man-hours) of collecting, drying, splitting, mixing, aliquoting, and counting each field sample (Sokal and Rohlf 1969).

III. RESULTS

A. Radionuclide Distributions and Inventories

The concentrations of ^{137}Cs in Mortandad Canyon sediments and Trinity soils as a function of field sampling volume are summarized in Table II. The ^{137}Cs concentrations in Mortandad Canyon sediments ranged from 60.8 to 88.6 pCi/g for all sampling locations and volumes. Mean cesium concentrations for the four field sampling volumes ranged from 70.1 to 76.7 pCi/g with coefficients of variation (standard deviation/mean) ranging from only 0.0726 to 0.0936. In contrast, the mean ^{137}Cs concentrations in Trinity Site soils ranged from 6.07 to 9.24 pCi/g per field sampling volume with coefficients of variation ranging from 0.171 to 0.643. This large variation in ^{137}Cs concentrations in the Trinity soils, compared with the sediments from Mortandad Canyon, is probably attributable in part to the relatively highly variable, insoluble nature of the Trinity fallout particles. Another factor is certainly the turbulent mixing processes that occur in the intermittent stream channel in Mortandad Canyon, which tend to reduce the spatial variability of ^{137}Cs at this site when compared to that found in Trinity soils.

TABLE II. Concentrations of ^{137}Cs in Mortandad Canyon Sediments and Trinity Soils as a Function of Field Sampling Volume

Sample Location	Field Sampling Volume (cm^3)			
	25	500	2500	12 500
	Mortandad Canyon Sediments (ρCi ^{137}Cs/g)			
1	76.2	78.2	79.4	74.3
2	60.8	67.4	64.9	72.7
3	67.1	67.5	64.5	67.2
4	67.5	72.2	61.6	68.5
5	68.5	75.4	69.1	70.4
6	63.4	75.7	70.9	69.9
7	77.0	80.9	76.5	72.9
8	75.6	81.3	79.6	77.3
9	75.0	88.6	75.4	81.6
10	69.6	79.8	78.3	83.0
Mean	70.1	76.7	72.0	73.8
Coefficient of Variation	0.0809	0.0854	0.0936	0.0726
	Trinity Soils (ρCi ^{137}Cs/g)			
1	1.63	5.50	5.71	8.28
2	4.44	5.82	5.78	8.01
3	7.93	14.5	11.1	6.89
4	4.58	5.04	5.68	9.69
5	4.76	10.7	7.26	7.78
6	5.71	9.65	4.77	10.5
7	6.48	12.8	15.3	7.97
8	16.1	12.7	6.48	10.0
9	3.59	6.75	4.97	6.38
10	5.46	8.92	6.53	6.88
Mean	6.07	9.24	7.36	8.24
Coefficient of Variation	0.643	0.368	0.451	0.171

Whereas the 25- and 500-cm^3 field sampling volumes resulted in only 1 sample for ^{137}Cs assay, the 2500- and 12 500-cm^3 samples required up to 29 aliquots to complete the ^{137}Cs analysis on 1 sample (Table III). The statistical distribution of $_{137}Cs$ concentrations in aliquots of the 12 500-cm^3 samples from Mortandad Canyon and Trinity Site was examined with the Kolmogorov-Smirnov One-Sample test to determine goodness of fit of the data to both the normal and the lognormal probability density functions. The results of these tests indicated that both density functions fit the data, probably because of the small number of samples tested ($17 \geq n \geq 29$), and hence, the low power of the test to reject the null hypothesis. Thus, the assumption of a normal distribution of sample data in subsequent statistical analyses was not seriously violated.

Aliquoting variation in ^{137}Cs concentrations was expressed as the coefficient of variation (CV) for aliquots generated at each study site (Table III); values of these CVs ranged from 0.005, representing essentially analytical error, to 0.242. One hypothesis tested using this aliquoting data was that there would be greater heterogeneity of ^{137}Cs in the 12 500-cm^3 samples than in the 2500-cm^3 samples because of the increased difficulty in mixing and splitting the samples. A comparison of the CVs of the ^{137}Cs concentrations at each sampling location (Table III) was not thought to be a sensitive indicator of possible differences; thus, we pooled the cesium data from the 10 sampling locations at both study sites to estimate a within-location variance component for each of the 12 500-cm^3 and 2500-cm^3 sample sizes. Results of the statistical analysis (F-ratio $P = 0.07$) suggested that the 12 500-cm^3 samples from Mortandad Canyon had a larger aliquoting variability for ^{137}Cs than the 2500-cm^3 samples. However, no difference in aliquoting variances was detected between the two sample volumes at Trinity Site, probably indicating that the variance is more strongly influenced by the nature of the ^{137}Cs distribution at this study site.

Inventories of ^{137}Cs were calculated for each field sampling volume at the Mortandad Canyon and Trinity-fallout study areas and expressed as pCi/cm^2. Total ^{137}Cs in each field sample was determined and divided by the field sampling area to calculate the ^{137}Cs inventory. This data, presented in Table IV, shows that the 25-cm^3 field sampling size exhibited a significantly larger mean ^{137}Cs inventory than the other three sample sizes used at Mortandad Canyon, with all field sample sizes exhibiting about the same variation in mean inventory estimates. Whereas the mean inventory estimates at Mortandad Canyon ranged from 520 to 691 pCi/cm^2, Trinity soils exhibited inventory estimates of from 32 to 44 pCi/cm^2 (Table IV). At the Trinity study area, in contrast with the Mortandad Canyon site, all sample sizes yielded the same average ^{137}Cs inventories, but the largest sample size (12 500-cm^3) exhibited the smallest variation in inventory estimates. These observations imply that the larger field sampling volumes should be used to estimate

TABLE III. Aliquoting Variation (Coefficients of Variation) in ^{137}Cs Concentrations for Mortandad Canyon Sediments and Trinity Site Soils

	Volume of Sediments Sampled (cm^3)			
	Mortandad Canyon Sediments		Trinity Soils	
Sampling Location	2500	12 500	2500	12 500
1	0.056 (5)[a]	0.093 (28)	0.050 (5)	0.038 (22)
2	0.032 (5)	0.089 (24)	0.242 (4)	0.094 (17)
3	0.068 (5)	0.067 (27)	0.013 (4)	0.068 (16)
4	0.033 (5)	0.083 (27)	0.020 (4)	0.046 (18)
5	0.075 (5)	0.070 (27)	0.033 (4)	0.055 (20)
6	0.088 (5)	0.078 (25)	0.153 (4)	0.073 (19)
7	0.075 (5)	0.082 (26)	0.005 (4)	0.091 (22)
8	0.061 (5)	0.049 (23)	0.089 (4)	0.137 (21)
9	0.057 (5)	0.074 (25)	0.048 (5)	0.085 (29)
10	0.053 (5)	0.056 (24)	0.099 (4)	0.081 (19)

[a]Number of aliquots in parentheses.

TABLE IV. Inventories of ^{137}Cs in Mortandad Canyon Sediments and Trinity Soils as a Function of Field Sampling Volume

Sample Location	Field Sampling Volume (cm^3) 25	500	2500	12 500
	Mortandad Canyon Sediments (pCi $^{137}Cs/cm^2$)			
1	835	567	633	604
2	607	499	476	506
3	657	537	484	547
4	688	519	401	531
5	698	580	448	553
6	616	542	501	505
7	743	567	521	560
8	685	627	621	546
9	661	561	456	627
10	645	553	598	582
Mean	691	555	520	556
Coefficient of Variation	0.11	0.063	0.14	0.071
	Trinity Site Soils (pCi $^{137}Cs/cm^2$)			
1	9.79	29.3	35.4	49.0
2	19.5	26.8	28.1	36.7
3	31.3	15.1	50.3	30.4
4	24.5	22.4	28.4	46.1
5	30.7	51.1	36.9	42.6
6	24.0	44.7	23.2	51.9
7	45.4	70.6	78.0	46.9
8	70.8	66.0	33.2	54.7
9	22.4	34.5	31.5	50.7
10	36.4	28.8	29.9	35.4
Mean	32	39	37	44
Coefficient of Variation	0.57	0.48	0.43	0.38

^{137}Cs inventories at the Mortandad Canyon site, and that inventories of ^{137}Cs in the Trinity soils should be performed using field sampling volumes compatible with the amount of variation that can be tolerated in inventory estimates.

The effect of bulk densities of field samples on ^{137}Cs inventories was then evaluated (Fig. 2). The data presented in Fig. 2 demonstrate no detectable relationship between ^{137}Cs inventory (pCi/cm^2) and bulk density for most of the samples collected at either intensive study site. However, the 25-cm^3 samples collected in Mortandad Canyon did exhibit larger ^{137}Cs inventories and bulk densities than any other samples examined in this study area. The 500-, 2500- and 12 500-cm^3 samples collected at the site had an average bulk density of 1.47 g/cm^3, whereas the 10 25-cm^3 samples exhibited a 32% larger average bulk density. This is an important finding because if field sampling volumes and contaminant inventories are influenced by bulk density, soil sampling programs should beware of soils varying in properties that influence bulk density, such as soil porosity, organic matter content, structure, and particle size distribution.

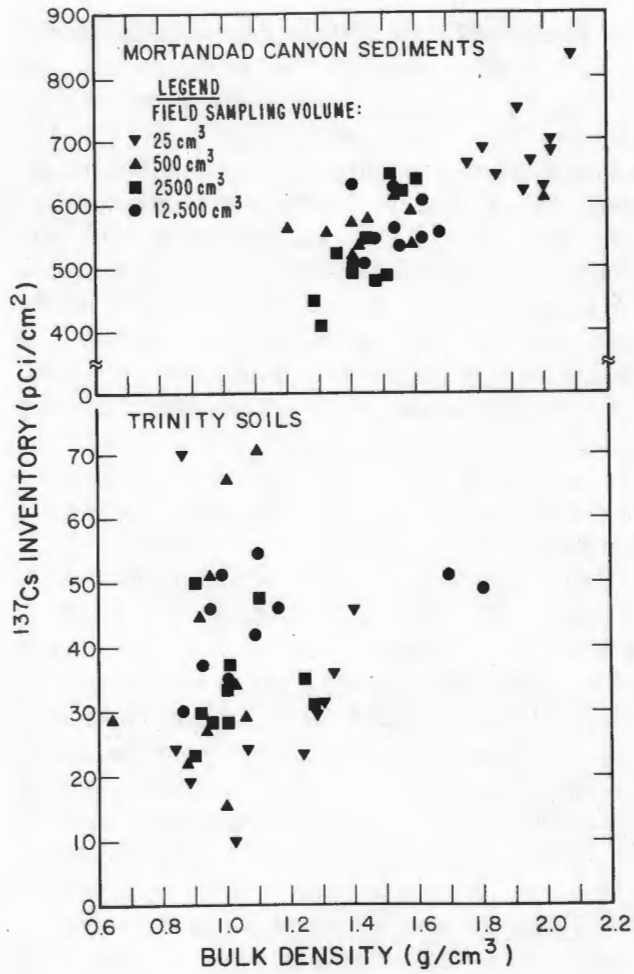

Fig. 2. Relationship between cesium inventories and bulk density for Mortandad Canyon sediments and Trinity soils.

The distribution of a few soil particle size fractions in the various-sized field samples from both study sites were measured to determine whether the different field sampling volumes sampled different particle size distributions (a factor known to influence the distribution of radionuclides in nature). Previous work had shown that soil particle size was a key to understanding the performance of a soil sampling program (Hawkins and Foster 1963).

The total weight of the coarse gravel fraction (soil particles with diameters ranging from 2 to 7.6 cm) was measured for each of the four samples collected at each sampling location of each study site (Fig. 3). The 12 500-cm^3 sampling volume collected coarse gravel at 8 of the 10 sampling locations in Mortandad Canyon (Fig. 3). The coarse gravel fraction consisted of tuff particles with mean diameters ranging from 1.8 to 4.6 cm and was detected in only 3 of the 30 sampling locations in Mortandad Canyon for the smaller sampling volumes. These data reflected part of a larger qualitative observation made for Mortandad Canyon samples; the three larger field sampling volumes collected mixtures of tuff and quartz particles, whereas the 25-cm^3 samples collected primarily quartz particles. Understanding that quartz particles have about twice the particle density of the lighter ash components of tuff, and that bulk density of a field sample (Fig. 2) reflects the particle densities of various sediment size fractions, leads to a better explanation of the bulk density-inventory relationship for various field sampling volumes.

At the Trinity study area, a similar phenomena was found in the fractional soil data shown in Fig 3; coarse gravel was found at all sampling locations using the 12 500-cm^3 samples and accounted for from 66 to 343 g of the total sample weight. Mean particle diameters in that fraction were found to range from 2.5 to 3.3 cm at individual sampling locations. Those particles were also found in 9 out of 10 sampling locations using the 2500-cm^3 field sampling volume at the Trinity study site and accounted for from 10 to 76 g of the total sample weight in those samples; smaller field sampling volumes detected the gravel fraction quite infrequently (Fig. 3). This could be an important consideration in a field sampling program close to Ground Zero, where almost all of the radionuclide inventory on a soil sample could exist in the gravel fraction, such as in trinitite particles that would only be sampled using the larger samples collected in this study.

Because elevated radionuclide concentrations are frequently found on small soil particles with large surface

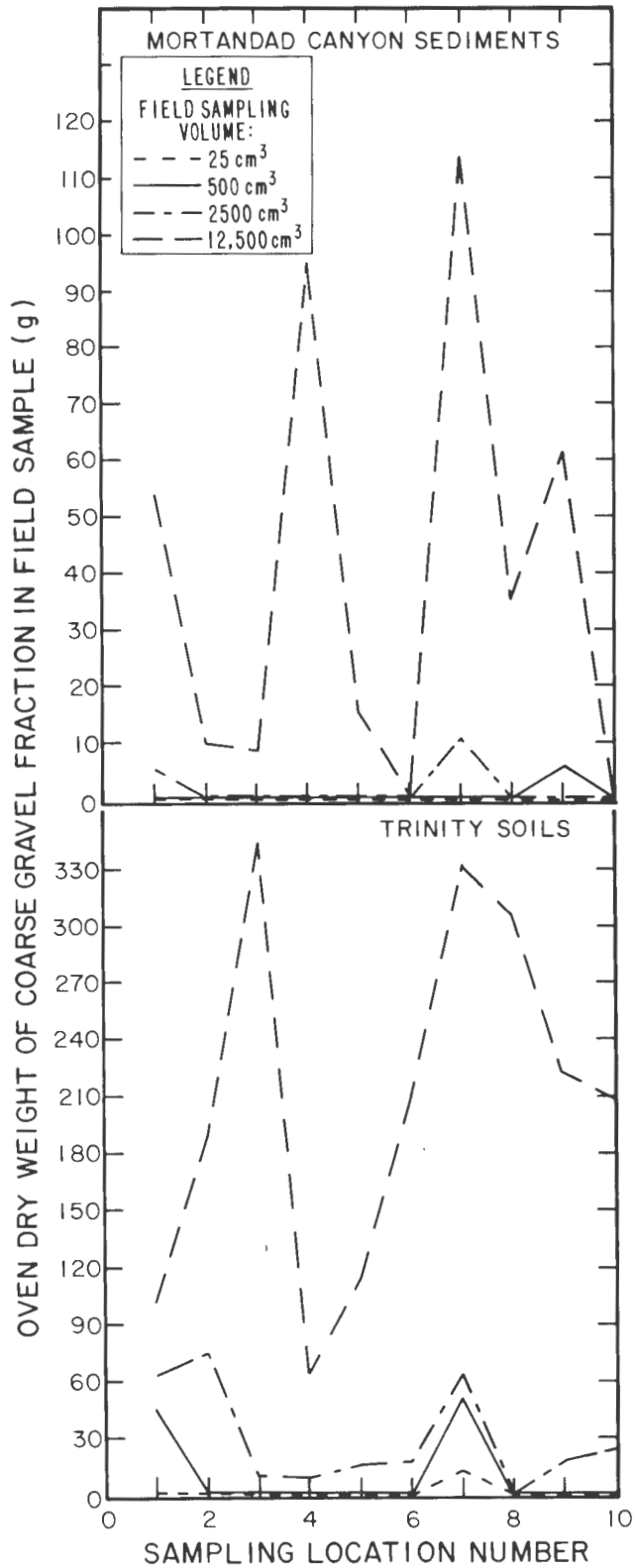

Fig. 3. Weight of coarse gravel in soil samples collected at 10 sampling locations at the Mortandad Canyon and Trinity study sites.

areas, the size distributions of particles smaller than the coarse gravel fraction were also studied as a function of field sampling volume. Data are presented in Table V that show the distribution of size fractions in the 25- and 12 500-cm^3 sampling volumes at 1 field sampling location in Mortandad Canyon and 1 at Trinity Site; those results are representative of the information collected on more than 40 samples at both of these study areas. In Mortandad Canyon, sediments collected using the 12 500-cm^3 sampling volume contained 70.8% 105- to 1170-μm particles, whereas this size fraction accounted for only 56.3% of the total weight of the smaller 25-cm^3 samples obtained. At Trinity Site, the 0- to 105-μm size fraction made up only 34.8% of the 25-cm^3 sample, but the 12 500-cm^3 field sampling volume contained 49.7% of the size fraction. Thus, varying field sampling volumes do collect soil particle size distributions in different proportions and could result in significant differences in total radionuclide inventories per sample if a significant portion of this inventory were contained in a small-size fraction.

B. Variance Components and Optimization of Sampling Scheme

All of the ^{137}Cs concentration data were used to analyze variance components of this data set as a function of field sampling volume at each study area. The statistical model used studied the jth aliquot ($j = 1, ..., a_i$) for the ith location ($i = 1, ..., \ell$),

$$X_{ij} = \mu + S_i + A_{ij} + C_{ij} ,$$

where X_{ij} represents the ^{137}Cs concentration of the jth aliquot of the ith location, μ represents the mean ^{137}Cs concentration of the population of locations, S_i is the difference between the ^{137}Cs content of the ith location and the average population concentration, and A_{ij} and C_{ij} represent the difference between the ^{137}Cs content of the jth aliquot, and the concentration at the ith location, respectively. Variance estimates of model components S_i, A_{ij}, and C_{ij} are referred to as spatial (σ_s), aliquoting (σ_a), and counting variation (σ_c), respectively; these were derived assuming the variance resulting from counting was constant and using ANOVA techniques (Snedecor and Cochran 1967). The results of this statistical analysis are presented in Table VI, which shows that the spatial variance component is usually the largest of the three variance components. There is a decreasing trend in the spatial variance component with increasing field sampling volume for Trinity soils, but not for Mortandad sediments. This observation is probably explained by the fact that the spatial variation in ^{137}Cs is much more uniform among field sampling volumes at Mortandad Canyon than at Trinity Site because of the turbulent mixing processes and the manner of downstream transport that occur in the stream channel during runoff events in Mortandad Canyon.

Using the variance components derived in Table VI and sample cost-estimate data, a cost analysis of our sampling schemes at both study areas was performed to determine the optimum allocation of sampling resources,

TABLE V. Particle Size Distribution Data for Selected Samples of Sampling Volumes

Sample Description		Particle Size Distribution (% Dry Weight)					
Field Sampling Volume (cm^3)	Field Sampling Location	<53 μm	53-105 μm	105-500 μm	0.5-1.17 mm	1.17-2 mm	>2mm
		Mortandad Canyon Sediments					
25	1[a]	1.86	2.49	21.6	34.7	27.0	12.3
12 500	1[b]	2.61	2.99	27.7	43.1	20.4	3.19
		Trinity Soils					
25	1[a]	21.8	13.0	25.3	14.5	7.26	18.5
12 500	1[b]	27.1	22.6	24.8	7.57	3.90	14.0

[a]Data represent the particle size distribution for the entire 25-cm^3 sample collected in the field.
[b]Data represent the particle size distribution for one aliquot of a 12 500-cm^3 sample collected in the field.

TABLE VI. Statistical Analysis of Cesium Concentration Data as a Function of Field Sampling Volume.

Variance Component	Estimated Value of Variance Component: Field Sampling Volume (cm^3) 25	500	2500	12 500
Mortandad Canyon Sediments				
Spatial	32.0	42.8	41.2	27.0
Aliquoting	0.0	0.0	20.7	30.9
Counting	0.135	0.135	0.134	0.134
Trinity Site Soils				
Spatial	15.4	11.5	10.4	1.95
Aliquoting	0.0	0.0	0.559	0.556
Counting	0.0016	0.0016	0.0016	0.0016

that is, what size sample and how many sample aliquots should be analyzed as a function of sample cost, measured in man-hours required to perform the ^{137}Cs analyses. The following equation expresses the total cost in man-hours of labor (C) as

$$C = a\ell C_c + \ell(a-1)C_a + \ell C_s ,$$

where a and ℓ represent the number of aliquots and the number of sampling locations, respectively; C_c, C_a, and C_s represent the costs (number of man-hours) for counting one soil aliquot, for preparing one soil aliquot, and for collecting one field sample, respectively. The counting cost (C_c) was estimated as 0.83 h. Aliquot preparation costs (C_a) were equal to 0.10 and 0.06 h per aliquot for the 2500- and 12 500-cm^3 field sampling volumes, respectively; this component was set equal to zero for the two smaller field sampling volumes, which consisted of only one aliquot. Values of C_s were estimated as 0.083, 0.167, 0.750, and 1.0 h for field sampling volumes of 25, 500, 2500, and 12 500 cm^3, respectively.

Several interesting observations were made in the optimization studies of our sampling scheme. Because of the relatively low contribution of counting error to total variance (Table VI) and the low value of C_c, our optimum allocation of resources was to count every soil aliquot only once. Future sampling schemes at these two sites involving the 2500- and 12 500-cm^3 sampling sizes should not involve counting all of the large number of aliquots (up to 29) collected within each sample (Table III). Optimally, at Mortandad Canyon, only two aliquots of the 2500-cm^3 sample and only four aliquots of the 12 500-cm^3 sample need be counted for ^{137}Cs. At Trinity Site, where the spatial variance component was influenced strongly by sampling volumes, only one aliquot of the 2500-cm^3 samples, and two aliquots of the 12 500-cm^3 samples should be assayed for optimal ^{137}Cs evaluation.

Total sample costs increased as larger field sampling volumes were used and ranged from 3 to 45 man-hours as sampling volumes increased from 25 to 12 500 cm^3; total costs could also be predicted from field sampling volumes selected (Fig. 4). The variance of the mean ^{137}Cs concentration decreased dramatically as the total sample cost increased from 0 to 45 man-hours, but was relatively unaffected by increasing the total sample cost beyond about 45 man-hours (Fig. 5). The latter observation has important implications in estimating exactly how much variation in radionuclide assay results can be expected for a given sample cost, a practical consideration in every research program.

IV. SUMMARY AND IMPLICATIONS

Mortandad Canyon sediments and Trinity soils were sampled for ^{137}Cs using 25-, 500-, 2500-, and 12 500-cm^3 field sampling volumes. Samples were collected at 10 locations at each site and all soil from each field sampling volume was assayed for ^{137}Cs, the larger samples resulting in up to 29 aliquots. The mean concentrations and inventories of the ^{137}Cs found at all 10 sampling locations in Mortandad Canyon exhibited low variability relative to similar data collected in the Trinity fallout pathway; for example, CVs of inventory estimates ranged from only 0.063 to 0.14 for Mortandad Canyon sediments although they were found to range from 0.38 to 0.57 at the Trinity intensive study area. This observation is largely attributed to the high degree of sediment mixing that takes place in Mortandad Canyon during runoff events. Aliquoting variabiltiy in ^{137}Cs concentrations was also evaluated for the 12 500-cm^3 and 2500-cm^3 samples at both sites and was found to be greater for the larger field sampling volume in Mortandad Canyon; this relationship was not observed at the Trinity location.

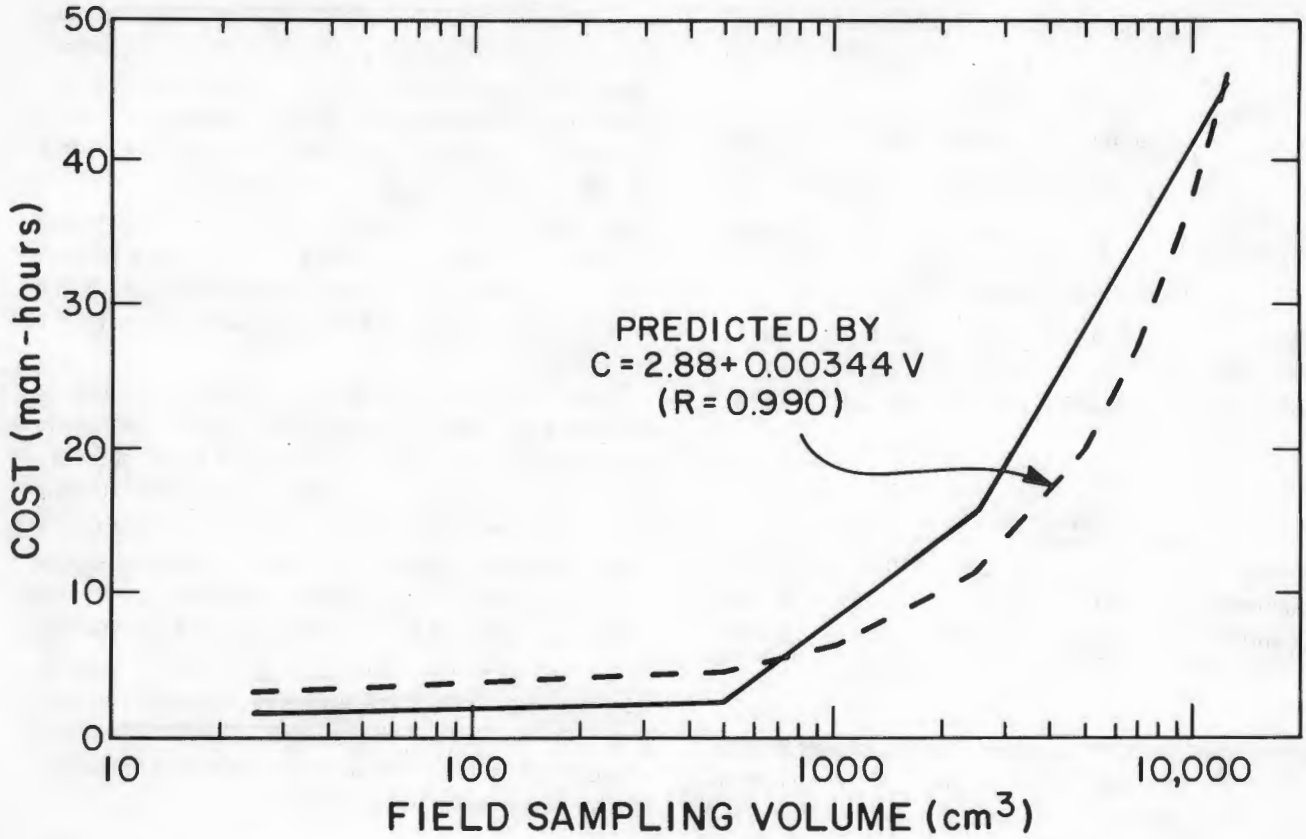

Fig. 4. Cost of soil sampling programs for cesium using various field sampling volumes.

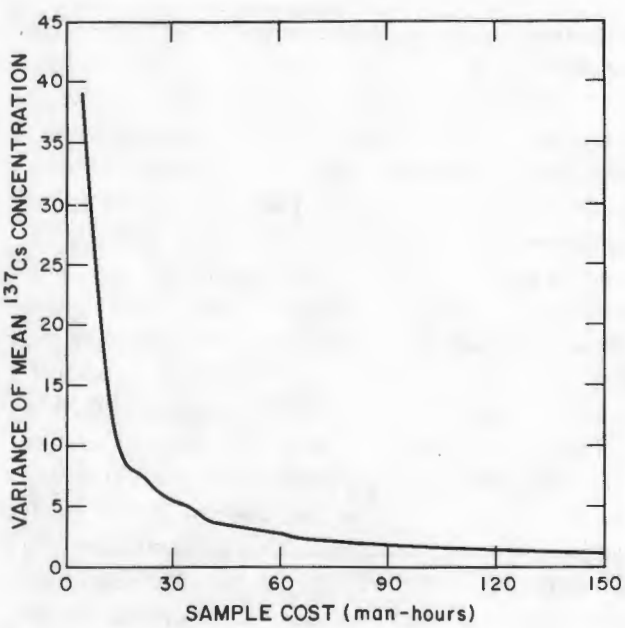

Fig. 5. Relationship of variance of mean cesium concentration to sample cost.

Because aliquoting variability can be independent of field sampling volume, an effective sampling program will need to access aliquoting variation to evaluate the overall variation of the final radionuclide inventory estimates. In relatively homogenous samples, such as those sampled in Mortandad Canyon in this study, the aliquoting variation may be the major component of the overall radionuclide inventory variation, a number that is intimately involved in health physics and waste management decisions.

The radionuclide data were compared with bulk densities of the four field sampling volumes at every sampling location to evaluate this factor's possible influence on ^{137}Cs inventory estimates. The 25-cm^3 samples collected at Mortandad Canyon had greater bulk densities and ^{137}Cs inventories than the other field sampling volumes. This effect was shown to be enhanced by the fact that various sized field samples collected size fractions of coarse gravel and smaller soil particles in different proportions. Thus, because radionuclide inventory estimates almost always involve a knowledge of the

radionuclide activity per gram of a small aliquot of the sample and the bulk density of the total sample, bulk density is an important variable to consider in a sampling program.

A statistical analysis of the ^{137}Cs data at each site was performed to determine estimates of spatial, aliquoting, and counting variance components as a function of field sampling volume and to optimize the cost of our sampling schemes. The spatial variance component was usually found to be larger than either the aliquoting or counting variation estimates, and decreased with increasing field sampling volume at Trinity Site. The optimization studies of our sampling schemes demonstrated that each aliquot should be counted only once, and that only two to four aliquots of the total number collected need be assayed for ^{137}Cs. As sample cost increased to 45 man-hours, the variance of the mean ^{137}Cs concentration decreased dramatically. Increased sample costs beyond 45 man-hours did little to reduce the variance of the mean ^{137}Cs concentration.

The results of this sampling experiment have important implications in radionuclide research and waste management. Investigations of radioecological interactions between the soil and the biosphere need soil sampling data from which precise soil radionuclide concentrations can be determined to detect contaminant effects on other ecosystem components. Sampling data such as that generated in the study can also be used to evaluate radionuclide spatial relationships in soils, as influenced by particle size distributions and other sources of variability. Optimization-cost analysis can provide an estimate of the level of effort needed to set field concentration limits for decontamination activities around nuclear waste accident sites. An improved, accurate determination of soil radionuclide concentrations and inventories in the field will also help provide better environmental monitoring and health physics dose estimates associated with nuclear waste management efforts. If this experimental approach for sampling soils is repeated, using a variety of field locations and radionuclide source terms, a standard method of collecting field samples for radionuclide assay could eventually be developed with a fixed field sampling volume designed to optimize sampling efforts and the quality of final radionuclide results. This sampling program should take into account both the spatial, aliquoting, and analytical variance components of the radionuclide data, as well as the other variables shown to influence these three components in this study.

REFERENCES

Anonymous. 1972. "Soil sample for depth profile measurements of radioactivity," in "Hazards Control Progress Report 41, September through December 1971," Lawrence Livermore Laboratory Report UCRL-50007-71-3, pp. 18-19.

Bernhardt, D. E. 1976. "Evaluation of sample collection and analysis techniques for environmental plutonium," US Environmental Protection Agency Technical Note ORP/LV-76-5.

Essington, E. H. and E. B. Fowler. 1977. "Distribution of transuranic nuclides in soils: A Review," in "Transuranics in natural environments," M. G. White and P. B. Dunaway, Eds., Nevada Applied Ecology Group report NVO-178, pp. 41-75.

Fowler, E. B. and E. H. Essington. 1977. "Sampling of soils for transuranic nuclides: A Review," in "Transuranics in natural environments," M. G. White and P. B. Dunaway, Eds., Nevada Applied Ecology Group report NVO-178, pp. 25-39.

Fowler, E. B., R. O. Gilbert, and E. H. Essington. 1977. "Sampling of soils for radioactivity: philosophy, experience, and results," in "Atmosphere-surface exchange of particulate and gaseous pollutants," R. J. Engelmann and G. A. Sehmel, Eds., US ERDA Symposium Series No. 38, Oak Ridge, TN, pp. 709-726.

Hakonson, T. E. and J. W. Nyhan. 1980. "Ecological relationships of plutonium in southwest ecosystems." in "Transuranic elements in the environment," W. C. Hanson, Ed., Oak Ridge National Laboratory report TIC-22800, pp. 403-419.

Hakonson, T. E., J. W. Nyhan, L. J. Johnson, and K. V. Bostick. 1973. "Ecological investigation of radioactive materials in waste discharge areas at Los Alamos for the period July 1, 1972 through March 31, 1973," Los Alamos Scientific Laboratory report LA-5282-MS.

Hakonson, T. E., J. W. Nyhan, and W. D. Purtymun. 1976. "Accumulation and transport of soil plutonium in liquid waste discharge areas at Los Alamos," in International Atomic Energy Agency report IAEA-SM-199/99, Vienna, pp. 175-189.

Hanson, W. C. 1976. "Studies of transuranic elements in arctic ecosystems." in *Radioecology and energy resources,* C. E. Cushing, Jr., Ed. (Dowden, Hutchinson and Ross, Inc., Stroudsburg, PA.) pp. 29-39.

Harley, J. H. 1972. "HASL procedures manual," Health and Safety Laboratory report HASL-300, New York.

Hawkins, D. B. and D. C. Foster. 1963. "A comparison of two methods of sampling gravel for the evaluation of a ground-disposal site for radioactive liquid waste," Idaho Operations Office report IDO-12027.

McLendon, H. R. 1975. "Soil monitoring for plutonium at the Savannah River Plant," Health Phys. **28,** 347-354.

Miera, Jr., F. R., K. V. Bostick, T. E. Hakonson, and J. W. Nyhan. 1977. "Biotic survey of Los Alamos radioactive liquid-effluent receiving areas," Los Alamos Scientific Laboratory report LA-6503-MS.

Nyhan, J. W., L. W. Hacker, T. E. Calhoun, and D. L. Young. 1978a. "Soil survey of Los Alamos County, New Mexico," Los Alamos Scientific Laboratory report LA-6779-MS.

Nyhan, J. W. and T. E. Hakonson. 1976. "Soil plutonium in the Los Alamos environs and at the Trinity Site," Battelle Pacific Northwest Laboratories report BNWL-2117.

Nyhan, J. W., T. E. Hakonson, F. R. Miera, Jr., and K. V. Bostick. 1978b. "Seasonal changes in the distribution of ^{137}Cs in alluvial soils at Los Alamos," Los Alamos Scientific Laboratory report LA-7298-MS.

Nyhan, J. W., F. R. Miera, Jr., and R. E. Neher. 1976a. "Distribution of plutonium in Trinity soils after 28 years," J. Environ. Qual. **5,** 431-437.

Nyhan, J. W., F. R. Miera, Jr., and R. J. Peters. 1976b. "The distribution of plutonium and cesium in alluvial soils of the Los Alamos environs," in *Radioecology and energy resources,* C. E. Cushing, Jr., Ed. (Dowden, Hutchinson, and Ross, Inc., Stroudsburg, PA), pp. 49-57.

Snedecor, G. W. and W. G. Cochran. 1967. *Statistical methods.* (Iowa State University Press, Ames, Iowa).

Sokal, R. R. and F. J. Rohlf. 1969. *Biometry* (W. H. Freeman and Co., San Fransisco, CA).