RPT88-ER-GN000-

ENVIRONMENTAL RESTORATION PROGRAM

LIBRARY COPY

STANDARD OPERATING PROCEDURES
REVISION 2

December 1988

DEPARTMENT OF ENERGY

ALBUQUERQUE OPERATIONS OFFICE

ENVIRONMENT AND HEALTH DIVISION

ER PROGRAM GROUP

DRAFT

12244

PREFACE

These Standard Operating Procedures (SOPs) provide field personnel with a list of activities to be performed before, during, and after a field procedure. The SOPs include a list of the associated SOPs, a checklist of equipment and supplies, and instructions for the procedure.

Field personnel are responsible for logging samples; taking field measurements; decontaminating equipment; and collecting, packaging, and shipping samples. Furthermore, field personnel may be required to supervise subcontractors and alert the ER Program Technical Support Office subcontractor about any variances from the statement of work.

It is imperative that field personnel have the most current information available concerning the work to be performed. The SOPs are continually being revised and enhanced; therefore, field team members must complete the following tasks before initiating any work.

1. Verify the revision status of the SOPs. The ER Program site manager, data administrator, or document control officer can furnish copies of the current SOP revision.

2. Make copies of the data forms and obtain the current list of information codes from the ER Program data administrator. Copies of the data forms and instruction for completing the data forms appear in the Appendixes of the SOPs. The master codes are continually being revised as new subcontractors join the program or work is initiated at installation units.

3. Review the Remedial Investigation Plan (RIP) and associated SOPs. Each investigation may differ slightly from an earlier assignment at the same site. A review of the RIP and associated SOPs is necessary to produce quality performance in an expedient manner.

CONTENTS

SECTION 1-GENERAL		Effective Date	Revision Number	Purpose
1.1	General Instructions for Field Personnel	MAY 1988	2	To provide field personnel with instructions regarding activities to be performed before, during, and after field investigations.
1.2	General Surface Geophysics	MAY 1988	2	To describe the general procedures for acquiring surface geophysical data that aid in buried waste delineation and geologic, hydrogeologic, or other interpretation related to hazardous waste site characterization.
1.3	Sample Control and Documentation	DECEMBER 1988	3	To define the steps necessary for sample control and identification, date recording, and chain-of-custody documentation.
1.4	Sample Containers and Preservation	MAY 1988	2	To provide guidance in the selection of suitable containers for samples, container cleaning, required sample volumes, sample collection, holding times, and the recommended preservation techniques for water, wastes, sediments, sludges and soil samples.

SECTION 1-GENERAL		Effective Date	Revision Number	Purpose
1.5	Guide to the Handling, Packaging, and Shipping of Samples	MAY 1988	2	To provide a general guide for packaging and shipping samples of environmental and hazardous materials to the of Samples laboratory. In addition, instructions are provided to select the correct category for packaging and shipping samples of unknown contents.
1.6	General Equipment Decontamination	MAY 1988	2	To describe methods for the decontamination of field equipment potentially contaminated during sample collection.
1.7	Sampling for Removable Alpha Contamination	MAY 1988	2	To describe a method of verifying that equipment leaving a controlled area that contains radioactive materials meets unrestricted release criteria for removable contamination. This equipment may include tools, vehicles, and miscellaneous items brought into contact with radioactive materials.
1.8	Personnel Decontamination --Level D Protection	MAY 1988	2	To describe the equipment and procedures required for the decontamination of persons who have performed field activities in Level D protective clothing.

SECTION 1-GENERAL		Effective Date	Revision Number	Purpose
1.9	Personnel Decontamination --Level C Protection	MAY 1988	2	To describe the equipment and procedures required for the decontamination of persons who have performed field activities in Level C protective clothing.
1.10	Personnel Decontamination --Level B Protection	MAY 1988	2	To describe the equipment and procedures required for the decontamination of persons who have performed field activities in Level B protective clothing.
1.11	Reserved	NO DATE		
1.12	Air Particulate Sampling with a Real-Time Aerosol Monitor	MAY 1988	2	To describe the equipment, operation, and procedures for collecting real-time air particulate data.
1.13	Reserved	NO DATE		
1.14	Reserved (Field Survey and Reconnaissance)	NO DATE		

SECTION 2-WATER SAMPLING		Effective Date	Revision Number	Purpose
2.1	Presample Purging of Wells	MAY 1988	2	To identify well-purging procedures for evacuation of stagnant water from the well bore and its replacement by groundwater in sufficient quantities so that a water sample representative of the formation of completion can be collected.
2.2	Field Measurements on Ground and Surface Water Samples	MAY 1988	2	To obtain reliable and accurate measurements of the field chemistry of water quality samples.
2.3	Sampling Monitoring Wells with a Bladder Pump	MAY 1988	2	To use a bladder pump to obtain representative groundwater samples at shallow depths that are beyond the capabilities of a peristaltic pump.
2.4	Sampling Monitoring Wells with a Bucket-Type	MAY 1988	2	To obtain a representative groundwater sample at depths beyond the range (or capability) of suction lift pumps when Bailer volatile air stripping is of concern, well-casing diameters are too narrow to accept submersible pumps, or other difficult conditions are present.
2.5	Sampling Monitoring Wells with a Submersible Pump	MAY 1988	2	To obtain a representative sample of the groundwater at depths beyond the capabilities of peristaltic pumps when bailing and bladder pumps are ineffective.

SECTION 2-WATER SAMPLING		Effective Date	Revision Number	Purpose
2.6	Sampling Monitoring Wells with a Peristaltic Pump	MAY 1988	2	To obtain a representative groundwater sample from a shallow well (less than 26 ft deep).
2.7	Sampling Commercial/ Municipal/Domestic Wells	MAY 1988	2	To define guidelines for field personnel to follow in sampling commercial, municipal, and domestic wells.
2.8	Sampling for Volatile Organics	MAY 1988	2	To outline procedures for collecting a representative groundwater sample and transporting it from its original environment to the laboratory for analysis of trace volatile organics.
2.9	Surface Water Sampling	MAY 1988	2	To define guidelines followed by field personnel in sampling surface water bodies and documenting all aspects of surface water sample collection.

SECTION 3-HYDRAULIC TESTING		Effective Date	Revision Number	Purpose
3.1	Water Level Measurement	MAY 1988	2	To determine the depth-to-water in an open borehole, cased borehole, monitoring well, or potentiometer.

SECTION 3-HYDRAULIC TESTING		Effective Date	Revision Number	Purpose
3.2	Aquifer (Slug) Testing	MAY 1988	2	To define field procedures to collect data for the determination of saturated hydraulic conductivity under in situ conditions by the slug test method of analysis.
3.3	Operational Check of Pressure Transducers Used in Measuring Water Levels in Wells	MAY 1988	2	To describe procedures for conducting office and field checks of pressure transducers.
3.4	Aquifer Pumping Test	MAY 1988	2	To define procedures to conduct pumping tests for the in situ determination of the hydraulic properties of water-bearing soils and rocks.

SECTION 4-DRILLING AND LOGGING		Effective Date	Revision Number	Purpose
4.1	Soil Boring	MAY 1988	2	To ensure acceptable, consistent soil-boring procedures for all pertinent aspects of hazardous waste investigations.
4.2	Rock Boring	MAY 1988	2	To ensure acceptable, consistent rock boring procedures for all pertinent aspects of hazardous waste investigations.

SECTION 4-DRILLING AND LOGGING		Effective Date	Revision Number	Purpose
4.3	Monitoring Well Installation	MAY 1988	2	To ensure acceptable, consistent monitoring well installation.
4.4	Monitoring Well Development	MAY 1988	2	To remove foreign materials that may have been introduced into the groundwater, well annulus, or well screen during well installation and to facilitate hydraulic communication between the screened formation and the monitoring well.
4.5	Borehole Gamma Logging	MAY 1988	2	To provide guidelines for logging gamma emissions at various depths in augered boreholes.
4.6	Test Pit Logging and Sampling	MAY 1988	2	To describe the physical nature of consolidated or unconsolidated subsurface earthen materials encountered during the excavation of a pit or trench.

SECTION 5-SOIL SAMPLING		Effective Date	Revision Number	Purpose
5.1	Soil and Rock Borehole Logging and Sampling	MAY 1988	2	To describe the physical nature of consolidated or unconsolidated subsurface earthen materials encountered during auger, rotary, or other drilling activities and collect samples of the earthen materials for further evaluation.

SECTION 5-SOIL SAMPLING		Effective Date	Revision Number	Purpose
5.2	Soil Sampling with a Spade and Scoop	MAY 1988	2	To describe a method for collecting a soil sample less than 4 feet below the land surface.
5.3	Subsurface Solid Sampling with Hand Auger and Thin-Wall Sampler	MAY 1988	2	To define a method of collecting subsurface solid samples with a hand auger and thin-wall tube sampler.
5.4	General Soil Gas Sampling and Field Chemical Analysis	MAY 1988	2	To define a method that ensures acceptable, consistent soil gas sampling and onsite analysis with a gas chromatograph for volatile organic contaminants.
5.5	Installation/Operation/ Sampling of Soil-Water Samplers	MAY 1988	2	To define the method for placing pressure-vacuum soil water samples, collecting soil water samples, and preserving the samples.
5.6	Installation/Operation of Soil Suction Monitors	MAY 1988	2	To define a method of placement, installation, and operation of soil suction monitors (tensiometers) for measurement of soil moisture potential.
5.7	Installation/Operation of Soil Moisture Monitors	MAY 1988	2	To define procedures for installing and operating soil moisture monitors.
5.8	Soil Sampling with a Stainless Steel Surface Soil Sampler	MAY 1988	2	To define procedures for collecting surface soil samples to determine the chemical and physical soil properties.

SECTION 6-HEALTH AND SAFETY		Effective Date	Revision Number	Purpose
6.1	Health and Safety Monitoring of Combustible Gas Levels	MAY 1988	2	To describe the equipment and proper method for monitoring combustible gas levels in order to determine when an explosion hazard exists in the work environment.
6.2	Health and Safety Monitoring of Organic Vapors with a Photoionization Detector	MAY 1988	2	To describe the equipment and proper method for environmental monitoring of toxic gases and vapors using a portable photoionization detector (PID).
6.3	Health and Safety Monitoring of Organic Vapors with a Flame Ionization Detector	MAY 1988	2	To describe the equipment and proper method for environmental monitoring of toxic gases and vapors using a portable flame ionization detector (FID).
6.4	Total Alpha Surface Contamination Measurements	MAY 1988	2	To provide guidance for determining levels of total surface alpha contamination on equipment, vehicles, and personnel that have been in contact with material that was potentially contaminated with alpha-emitting radionuclides.
6.5	Screening Soil Samples for Alpha Emitters	MAY 1988	2	To provide a method of screening for alpha-emitting radionuclides in soil samples.

SECTION 6-HEALTH AND SAFETY		Effective Date	Revision Number	Purpose
6.6	Use of Gamma Spectrometry Systems as a Screen for Gamma-Ray-Emitting Radionuclides in Soil Samples	MAY 1988	2	To provide guidance for the operation of a gamma spectrometry system to analyze soil samples in the laboratory.
6.7	Near Surface and Soil Sample Screening for Low-Energy Gamma Radiation Using the FIDLER	MAY 1988	2	To describe the procedure in which a field instrument for the detection of low-energy radiation (FIDLER) is used to monitor surfaces and soil samples for the presence of low-energy gamma radiations that accompany some alpha emissions.
6.8	In Situ Gamma-Ray Measurements Using a Shielded Delta-Gamma Detector	MAY 1988	2	To provide guidance for the in situ measurement of gamma radiation emitted from Ra-226 in surface soil and to describe a technique for screening potentially contaminated soils for other gamma-emitting radionuclides.
6.9	Exposure Rate Measurements Using a Pressurized Ionization Chamber	MAY 1988	2	To describe the equipment and proper method to determine the gamma exposure rate at a height of one meter above the soil or other surfaces using a pressurized ionization chamber (PIC).

SECTION 6-HEALTH AND SAFETY		Effective Date	Revision Number	Purpose
6.10	Correlation of a Sodium Iodide Detector to the Pressurized Ionization Chamber	MAY 1988	2	To describe the method for correlating count rates obtained with a sodium iodide (NaI) detector and ratemeter/scaler to the exposure rate measurements taken with a pressurized ionization chamber (PIC).
6.11	Beta-Gamma Radiation Measurements Using a Geiger-Mueller Detector	MAY 1988	2	To describe the methodology for measuring beta-gamma radiation levels.
6.12	Radon-222 Flux Measurements Using Charcoal Canisters	MAY 1988	2	To provide instructions for determining radon-222 flux from ground surfaces.
6.13	Radon-222 Measurements Using Track-Etch Detectors	MAY 1988	2	To provide detailed procedures and overall guidelines for making long-term average radon-222 (Rn-222) concentration measurements in air with track-etch film detectors.
6.14	Work Area Radon Measurements in Air	MAY 1988	2	To describe the methods used to collect grab samples of ambiant air and the subsequent quantitative analyses of the samples to determine radon-222 gas concentrations in the work area.
6.15	Measurement of Gamma-Ray Fields Using a Sodium Iodide (NaI) Detector	MAY 1988	2	To describe the procedure for making count-rate measurements of a gamma-ray field with a sodium iodide (NaI) detector.

SECTION 6-HEALTH AND SAFETY		Effective Date	Revision Number	Purpose
6.16	Heat Stress Monitoring	MAY 1988	2	To outline the procedure for monitoring heat stress and other measures for protecting workers from heat exhaustion and heat stroke in warm environments.
6.17	Measurement of Radon-Daughter Concentrations in Air	MAY 1988	2	To describe the methods used to collect samples of filtered particulates in the air and the subsequent quantitative analyses to these samples to determine radon-222 daughter concentrations.

ASSOCIATED PROCEDURES LISTING

SECTION 1-GENERAL		Effective Date	Revision Number	Associated Procedures
1.1	General Instructions for Field Personnel	MAY 1988	2	NONE
1.2	General Surface Geophysics	MAY 1988	2	NONE
1.3	Sample Control and Documentation	DECEMBER 1988	3	1.1, 1.4, 1.5
1.4	Sample Containers and Preservation	MAY 1988	2	1.3, 1.5, 1.6 2.8
1.5	Guide to the Handling, Packaging, and Shipping	MAY 1988	2	1.1, 1.3, 1.4, 1.6
1.6	General Equipment Decontamination	MAY 1988	2	1.1, 1.7 6.4, 6.11
1.7	Sampling for Removable Alpha Contamination	MAY 1988	2	1.1, 1.6 6.4, 6.11
1.8	Personnel Decontamination --Level D Protection	MAY 1988	2	1.1, 1.6, 1.9, 1.10
1.9	Personnel Decontamination --Level C Protection	MAY 1988	2	1.1, 1.6, 1.8, 1.10
1.10	Personnel Decontamination --Level B Protection	MAY 1988	2	1.1, 1.6, 1.8, 1.9

SECTION 1-GENERAL		Effective Date	Revision Number	Associated Procedures
1.11	Reserved	NO DATE		
1.12	Air Particulate Sampling with a Real-Time Aerosol Monitor	MAY 1988	2	1.1, 1.6
1.13	Reserved	NO DATE		
1.14	Reserved (Field Survey and Reconnaissance)	NO DATE		

SECTION 2- WATER SAMPLING		Effective Date	Revision Number	Associated Procedures
2.1	Presample Purging of Wells	MAY 1988	2	1.1, 1.6 2.2, 2.3, 2.4, 2.5, 2.6 3.1 6.1, 6.2, 6.3
2.2	Field Measurements on Ground and Surface Water Samples	MAY 1988	2	1.1, 1.6 2.1, 2.3, 2.4, 2.5, 2.6, 2.8, 2.9 3.1 4.3
2.3	Sampling Monitoring Wells with a Bladder Pump	MAY 1988	2	1.1, 1.3, 1.4, 1.5, 1.6 2.1, 2.2 3.1
2.4	Sampling Monitoring Wells with a Bucket-Type Bailer	MAY 1988	2	1.1, 1.3, 1.4, 1.5, 1.6 2.1, 2.2, 2.8 3.1

SECTION 2- WATER SAMPLING		Effective Date	Revision Number	Associated Procedures
2.5	Sampling Monitoring Wells with a Submersible Pump	MAY 1988	2	1.1, 1.3, 1.4, 1.5, 1.6 2.1, 2.2 3.1
2.6	Sampling Monitoring Wells with a Peristaltic Pump	MAY 1988	2	1.1, 1.3, 1.4, 1.5, 1.6 2.1, 2.2, 2.4, 2.8 3.1
2.7	Sampling Commercial/ Municipal/Domestic Wells	MAY 1988	2	1.1, 1.3, 1.4, 1.5, 1.6 2.1, 2.2, 2.6, 2.8 3.1
2.8	Sampling for Volatile Organics	MAY 1988	2	1.1, 1.3, 1.4, 1.5, 1.6 2.1, 2.2, 2.3, 2.4
2.9	Surface Water Sampling	MAY 1988	2	1.1, 1.3, 1.4, 1.5, 1.6 2.1, 2.2, 2.6, 2.8

SECTION 3-HYDRAULIC TESTING		Effective Date	Revision Number	Associated Procedures
3.1	Water Level Measurement	MAY 1988	2	1.1, 1.6 3.3 6.1, 6.2, 6.3
3.2	Aquifer (Slug) Testing	MAY 1988	2	1.1, 1.6 3.1, 3.3
3.3	Operational Check of Pressure Transducers Used in Measuring Water Levels in Wells	MAY 1988	2	1.1, 1.6 3.1, 3.2, 3.4

SECTION 3-HYDRAULIC TESTING		Effective Date	Revision Number	Associated Procedures
3.4	Aquifer Pumping Test	MAY 1988	2	1.1, 1.6 3.1, 3.3

SECTION 4-DRILLING AND LOGGING		Effective Date	Revision Number	Associated Procedures
4.1	Soil Boring	MAY 1988	2	1.1, 1.3, 1.4, 1.5, 1.6 4.2, 4.3 5.1 6.1, 6.2, 6.3
4.2	Rock Boring	MAY 1988	2	1.1, 1.3, 1.4, 1.5, 1.6 4.3 5.1 6.1, 6.2, 6.3
4.3	Monitoring Well Installation	MAY 1988	2	1.1, 1.6 2.2, 3.1 4.1, 4.2, 4.4 5.1 6.1, 6.2, 6.3
4.4	Monitoring Well Development	MAY 1988	2	1.1, 1.6 2.2, 3.1, 4.3 6.1, 6.2, 6.3
4.5	Borehole Gamma Logging	MAY 1988	2	1.1, 1.6, 5.1 6.5, 6.6, 6.7, 6.15
4.6	Test Pit Logging and Sampling	MAY 1988	2	1.1, 1.3, 1.4, 1.5, 1.6 5.2

SECTION 5-SOIL SAMPLING		Effective Date	Revision Number	Associated Procedures
5.1	Soil and Rock Borehole Logging and Sampling	MAY 1988	2	1.1, 1.3, 1.4, 1.5, 1.6 4.1, 4.2
5.2	Soil Sampling with a Spade and Scoop	MAY 1988	2	1.1, 1.3, 1.4, 1.5, 1.6 5.1
5.3	Subsurface Solid Sampling with Hand Auger and Thin-Wall Sampler	MAY 1988	2	1.1, 1.3, 1.4, 1.5, 1.6
5.4	General Soil Gas Sampling and Field Chemical Analysis	MAY 1988	2	1.1, 1.6
5.5	Installation/Operation/ Sampling of Soil-Water Samplers	MAY 1988	2	1.1, 1.3, 1.4, 1.5, 1.6
5.6	Installation/Operation of Soil Suction Monitors	MAY 1988	2	1.1, 1.3, 1.6
5.7	Installation/Operation of Soil Moisture Monitors	MAY 1988	2	1.1, 1.6 4.1
5.8	Soil Sampling with a Stainless Steel Surface Soil Sampler	MAY 1988	2	1.1, 1.3, 1.4, 1.5, 1.6 4.1, 5.1

SECTION 6-HEALTH AND SAFETY		Effective Date	Revision Number	Associated Procedures
6.1	Health and Safety Monitoring of Combustible Gas Levels	MAY 1988	2	1.1, 1.6
6.2	Health and Safety Monitoring of Organic Vapors with a Photoionization Detector	MAY 1988	2	1.1, 1.6 6.1
6.3	Health and Safety Monitoring of Organic Vapors with a Flame Ionization Detector	MAY 1988	2	1.1, 1.6
6.4	Total Alpha Surface Contamination Measurements	MAY 1988	2	1.1, 1.6, 1.7 6.11
6.5	Screening Soil Samples for Alpha Emitters	MAY 1988	2	1.1, 1.6
6.6	Use of Gamma Spectrometry Systems as a Screen for Gamma-Ray-Emitting Radionuclides in Soil Samples	MAY 1988	2	1.6 6.11
6.7	Near Surface and Soil Sample Screening for Low-Energy Gamma Radiation Using the FIDLER	MAY 1988	2	1.1, 1.6 6.5

SECTION 6-HEALTH AND SAFETY		Effective Date	Revision Number	Associated Procedures
6.8	In Situ Gamma-Ray Measurements Using a Shielded Delta-Gamma Detector	MAY 1988	2	1.1, 1.6
6.9	Exposure Rate Measurements Using a Pressurized Ionization Chamber	MAY 1988	2	1.1, 1.6 6.10
6.10	Correlation of a Sodium Iodide Detector to the Pressurized Ionization Chamber	MAY 1988	2	1.1, 1.6 6.9, 6.15
6.11	Beta-Gamma Radiation Measurements Using a Geiger-Mueller Detector	MAY 1988	2	1.1, 1.6
6.12	Radon-222 Flux Measurements Using Charcoal Canisters	MAY 1988	2	1.1, 1.6 6.6
6.13	Radon-222 Measurements Using Track-Etch Detectors	MAY 1988	2	1.1, 1.6
6.14	Work Area Radon Measurements in Air	MAY 1988	2	1.1, 1.6
6.15	Measurement of Gamma-Ray Fields Using a Sodium Iodide (NaI) Detector	MAY 1988	2	1.1, 1.6 6.9, 6.10

SECTION 6-HEALTH AND SAFETY		Effective Date	Revision Number	Associated Procedures
6.16	Heat Stress Monitoring	MAY 1988	2	1.1, 1.6
6.17	Measurement of Radon-Daughter Concentrations in Air	MAY 1988	2	1.1, 1.6

DATA COMPLETION FORMS

Form ID	SOP which contains Data Form Completion Instructions	Title
BHD-002	5.1	Borehole Log (Soil)
BHD-003	5.1	Borehole Log (Rock)
TPD-004	4.6	Test Pit Log
WCD-005	4.3	Well Completion Information
WQD-007	2.2	Surface Water Quality Sampling Record
WQD-008	2.2	Groundwater Quality Sampling Record
STD-010	3.2	Slug Test Data
PTD-011	3.4	Pump/Recovery Test Data
GWD-012	3.1	Groundwater Level Data
SWS-036	5.5	Soil Water Sampling Field Data
SGD-038	5.4	Soil Gas Data
SMD-039	5.7	Soil Moisture Measurements
PHO-040	6.2	Photoionization Detector Field Data
TEN-041	5.6	Tensiometer Sampling Field Data
FID-042	6.3	Flame Ionization Detector Field Data
AER-043	1.12	Real-time Aerosol Field Monitoring Data
BWC-044	4.3	Borehole/Well Construction Field Data Log
GWG-046	3.1	Groundwater Levels and Gasoline Thickness Data
CUS-047	1.3	Custody Transfer Record/Lab Work Request
SEC-048	2.2	Standard Electrical Conductivity Data
SED-100	6.15	Gamma Ray Count Rate Data (Using-Scintillometer)
CGI-101	6.1	Combustible Gas (CGI) Indicator Monitoring Data
PCR-102	6.7	Plateau Curve Record
DAE-103	1.7	Daily Alpha Efficiency Check Form
ACS-104	1.7	Removable Alpha Contamination Survey Data
HSM-105	6.16	Heat Stress Monitoring Record
GAS-106	6.5	Gross Alpha Screening Field Log
GAS-108	6.5	Gross Alpha Screening Field Log-Background Evaluation
SED-111	6.10	Exposure Rate Correlation Data
DMD-112	6.8	Delta Measurement Data
RFF-113	6.12	Radon Flux Field Data
FBL-114	6.17	Tray Filter Background and Efficiency Log
CBL-115	6.14	Cell Background Log
ATD-116	6.13	Alpha Track Dosimeter Data
BHL-117	4.5	Borehole Log

Form ID	SOP which contains Data Form Completion Instructions	Title
RFM-118	6.12	Radon Flux Measurement Data
FMD-120	6.7	FIDLER Measurement Data
BGM-121	6.11	Beta-Gamma Measurements
BKG-122	6.8	Background Data
RDC-123	6.17	Radon Daughter Concentration Data
RGC-124	6.14	Radon Gas Concentration Data
FSS-125	6.7	FIDLER Soil Sample Screening Log
TAC-128	6.4	Total Alpha Contamination Survey Data
ERD-129	6.9	Exposure Rate Data
SAT-131	2.2	Standard Alkalinity Test Record
SSL-132	1.3	Soil Sample Identification Label
WSL-133	1.3	Water Sample Identification Record

STANDARD OPERATING PROCEDURE 1.1

GENERAL INSTRUCTIONS FOR FIELD PERSONNEL

1. PURPOSE

To provide field personnel with instructions regarding activities to be performed before, during, and after field investigations.

2. DISCUSSION

The Remedial Investigation Plan (RIP) contains specific details about procedures and equipment for a given operation. Refer to the RIP for the type of samples, measurements, and tests to be collected or performed. The collection and documentation of data should be performed as described in specific SOPs. These general instructions are intended to supplement the information supplied in the RIP and associated SOPs and clarify the role of field personnel at remedial investigations. These instructions will ensure that field personnel take the proper precautions to understand the site, the objective and the schedule for the field program, their authority, and their responsibilities described in the RIP.

This SOP is supported by others that describe procedures and rationale for performing reconnaissance geophysical and soil gas surveys; soil and rock boring; sample logging; soil and sediment sample collection; installation and operation of vadose-zone instruments and samplers; groundwater monitoring well installation, development, and sampling; operation of sampling equipment; performance of aquifer testing; collection, preservation, handling, packaging, and shipping of samples; decontamination procedures; health and safety monitoring; and radiological surveys.

3. PROCEDURES

3.1. Associated Procedures

Before every operation, a review of this SOP and SOPs 1.3-1.10 is required. In addition, a review of associated SOPs for each task is necessary. The associated SOPs are listed in Section 3.1 of each task SOP. Constant review of the SOPs will ensure that the work performed in the field is legally defensible, well documented, and cost-effective. The decontamination procedures are important for protecting the health and safety of workers.

3.2. Preparation

3.2.1. Office

A. Personnel should review the RIP and associated documentation for a specific operation and obtain all information related to the purpose and intent of the field program. This may include (but is not limited to) the documents listed below.

1. The scope of work or work plan described in the RIP

2. Previous reports related to the site

3. Reports related to the area

4. Site maps

5. Area maps

6. Access agreements

7. The subcontractor's work plan

8. Data collection and equipment checklists

9. Associated SOPs

B. Field personnel are expected to maintain a good working relationship with the client, community, and subcontractors. With this in mind, field personnel should contact installation staff, members of the community (in coordination with installation staff), and subcontractors before work is initiated. During the initial contact, permission to enter private property or security areas should be obtained.

C. Obtain and test all equipment needed for the task. See checklist in Appendix 5.1.

D. Most sample analyses must be performed within a stringent time period. In addition, laboratories are vulnerable to heavy overloads. Contact the laboratory before sampling activities begin to ensure that the personnel are aware of specific requirements for analyses and can complete the work quickly and efficiently.

E. Delays at the freight office can be eliminated by contacting the carrier before arrival with a shipment. The carrier can supply information on regulations and specifications for shipping, the address of the nearest delivery office, and the time of the next freight pickup in the area.

3.2.2. Documentation

A. Obtain a logbook and ER Program data collection forms. All measurements, observations, and instrument readings should be entered on the forms according to the instructions supplied. All entries should be made in black ink that is not water soluble (not a felt-tip pen). Make an entry in each blank. Where there is no data entry, enter UNK for Unknown, NA for Not Applicable, or ND for Not Done. If any procedure was not performed as prescribed, give the reason for the change or omission on the form. To change an entry, draw a single line through it, add the correct information above it, and initial the change. Information that does not require data entry should be entered in the logbook. All logbooks are numbered, bound, and contain numbered pages for quality assurance/quality control purposes. Do not alter the logbook or data collection forms in any manner.

B. The information management codes and sample identification numbers used in data entry are assigned by the data administrator. This system is necessary to avoid duplication of site identifiers or inaccurate entries. Because the list of codes is continually being updated, SOPs cannot be revised each time a new list is produced.

C. Three days before leaving for any field trip, a previsit/pretravel report form must be submitted to DOE. The report contains information about dates of travel, mode of travel, hotel accommodations, and contact phone numbers. Arrangements for renting field vehicles should be made at this time.

3.2.3. Field

A. Check the condition and operation of all supplies and equipment at the site. Perform calibration checks specified in operators' manuals or appropriate SOPs.

B. Establish decontamination zones and barricades to public access.

3.3. Operation

A. The field personnel monitor and provide technical direction for the field work, log samples, take measurements, and sometimes pack and ship samples.

B. Under direction of the site manager, field personnel may designate sampling or hole locations, depth and completion zones, types and depths of sample, and approve and record procedures, materials, and all activities conducted in compliance with the RIP.

NOTE: Whenever a sample is collected, a custody record must be initiated on the Custody Transfer Record/Lab Work Request form and a label affixed to the sample container--either a Soil Sample Identification Label or a Water Sample Identification Label. SOP 1.3, Sample Control and Documentation, contains copies of these forms and instructions for completing the forms.

C. Additional duties that the field personnel may perform are described below.

1. Keep a logbook to record information concerning equipment, personnel, site visitors, and activities (start and stop times, supplies used, footage drilled/installed, and site observations), as well as weather or site conditions affecting the activities. The field personnel should note all relevant instructions and information. All information pertaining to a field activity should be entered in a bound book with consecutively numbered pages (see SOP 1.3, Sample Control and Documentation, for instructions on keeping the logbook). Subcontractors should sign/initial the daily log, thereby certifying that the account records agree with their estimates.

2. Telephone the site manager or office headquarters daily and provide a progress report.

3. Observe that the subcontractor complies with the RIP and all applicable permits and licenses.

4. Complete all data collection forms according to applicable instructions as work progresses.

5. Observe whether the subcontractor follows the applicable health and safety requirements. If violations occur, the field personnel should stop work and immediately notify the site manager or site health and safety officer.

6. Monitor air, personnel, and equipment for contamination and record results on appropriate forms or in the logbook.

7. Supervise decontamination of equipment and personnel. Record procedures used for decontamination in the logbook. Collect decontamination solutions in containers for appropriate disposal as specified in the RIP.

8. Notify the site manager of any modifications to the contract that may be appropriate. Work not defined in the RIP should not be initiated without the approval of the site manager.

3.4. Postoperation

3.4.1. Field

A. Ensure that all equipment is accounted for, decontaminated (see SOP 1.6, General Equipment Decontamination), and ready for shipment.

B. Restore the site to the presampling conditions as specified in the RIP. Restoration can include repair of damage to the land surface (tire ruts) or private property (fences), as well as restoration anticipated at the time the RIP was prepared (for example, revegetation or borehole abandonment).

C. Mark sampling locations or survey points with wooden lathe stakes, wooden survey pegs, or metal fenceposts. Write the location ID on the marker or survey flagging so that it is readily visible. Mark groundwater monitoring wells on the guard pipe and inside the casing cap. Use a black marker for wooden stakes, flagging, and the casing cap. Mark the guard pipes with welds or stencils and paint.

D. Shipping samples is the last task in most field operations. SOPs 1.3-1.5 should be used as guides to sample handling and transport. SOP 1.5, Guide to Handling, Packaging, and Shipping of Samples, is a summary of Department of Transportation regulations pertaining to the transport of hazardous substances most commonly sampled in the field. Use SOP 1.5 in conjunction with the appropriate Code of Federal Regulations and guidance supplied by the freight carrier to ensure that packages are documented and properly labeled.

3.4.2. Documentation

A. Record any restoration work in the logbook.

B. Record any uncompleted work in the logbook. This record may include sampling that could not be performed, damage that could not be repaired, or requirements for long-term monitoring (for example, the need to verify instrument readings at different times of the year).

C. Complete logbook entries, verify the accuracy of entries, and sign/initial all pages.

D. Review data collection forms for completeness.

E. Submit a travel expense report.

3.4.3. Office

A. Deliver original forms and logbooks to the site manager for technical review. He/she will review, sign forms, and transmit to the document control officer (copies to the files) for eventual delivery to the Department of Energy.

B. Inventory equipment and supplies. Repair or replace all broken or damaged equipment. Replace expendable items. Return equipment to the equipment manager and report incidents of malfunction or damage.

C. Contact the analytical laboratory to ensure that samples arrived safely and instructions for sample analyses are clearly understood.

4. SOURCES

None.

5. APPENDIX

5.1. Equipment and Supplies Checklist

APPENDIX 5.1

EQUIPMENT AND SUPPLIES CHECKLIST

_____ Overshoes

_____ Work gloves (2 pairs)

_____ Acid (10% HCL) bottle

_____ Clipboard case

_____ Strapping tape

_____ Pin hammer

_____ Tape measure (tenths)

_____ Protractor

_____ Hat

_____ First aid kit

_____ Sun screen

_____ Thermoluminescent dosimeter (TLD)

_____ Safety shoes/boots

_____ Ziplock bags

_____ Preprinted labels

_____ Distilled (organic-free) water

_____ Methanol (Nanograde)

_____ Freight forms

_____ Telephone directories

_____ Chain-of-custody forms

_____ Hard hat

_____ Pieces of wood (2 inches x 2 inches x 8 inches) to indicate core loss intervals

APPENDIX 5.1, continued

EQUIPMENT AND SUPPLIES CHECKLIST

_____ Stamped, addressed envelopes (large and regular sizes)

_____ Phone and gas credit cards

_____ Calculator

_____ Pens, pencils, and permanent markers

_____ Package cord

_____ Flagging

_____ Hand lens

_____ Tool box

_____ Rain suit

_____ Camera

_____ Ear plugs

_____ Stopwatch

_____ Cold-weather gear

_____ Alpha meter

_____ Safety glasses

_____ Kitchen screen (determine lithology)

_____ Ice chest

_____ Bound logbook

_____ Data collection forms

STANDARD OPERATING PROCEDURE 1.2

GENERAL SURFACE GEOPHYSICS

1. PURPOSE

To describe the general procedures for acquiring surface geophysical data that aid in buried waste delineation and geologic, hydrogeologic, or other interpretation related to hazardous waste site characterization.

2. DISCUSSION

The Remedial Investigation Plan (RIP) contains specific details about the procedures, equipment, and sampling frequency for geophysical surveys. Refer to the RIP for the type of measurements to be collected and the location of the survey/sampling area.

The six geophysical techniques available for hazardous waste site characterization are metal detection, magnetometry, ground-penetrating radar (GPR), electromagnetics (EM), electrical resistivity, and seismic refraction. Metal detectors, EM, and magnetometry are useful in locating buried metallic wastes. GPR, EM, and magnetometry can define the boundaries of buried trenches and other subsurface disturbances. Electromagnetic and electrical resistivity methods can help define plumes of contaminants in groundwater. Electrical resistivity, seismic, electrical, and GPR techniques are useful in determining geologic stratigraphy and depths to the water table.

In general, the survey should be performed and the results interpreted by qualified technical personnel operating the surface geophysical equipment. Therefore, this SOP provides a means of consistently performing the various surface geophysical methods, a means to perform calibration checks of geophysical survey equipment in the field, and guidance for interpreting the results obtained from the various surface geophysical techniques, rather than specific details of instrument operation.

The following quality assurance procedures apply to all geophysical instruments used during data acquisition.

1. All data transmittals should be documented on a standard chain-of-custody form (see SOP 1.3, Sample Control and Documentation). Copies of the Custody Transfer Record/Lab Work Request form should be maintained by the field manager.

2. All geophysical instruments should be operated according to operating instructions supplied by the manufacturer.

3. Battery voltage levels for all instruments should be monitored each day throughout the survey. Battery packs should be charged or replaced when voltage levels fall below the level specified by geophysical equipment manufacturers.

4. All instruments should be calibrated annually by the manufacturer. Calibration records will be maintained in the office where the instrument is stored between investigations. A copy of the calibration records should

be kept with the equipment at all times. More frequent calibrations may be necessary if field measurements indicate possible instrument malfunction.

5. The resolution achieved with geophysical surveys is affected by several factors, including the geology of the site, the quality of baseline information, characteristics of wastes and waste disposal practices, cultural features, and survey grid spacing. The requirements for specific geophysical surveys should be described in the RIP.

3. PROCEDURES

3.1. Associated Procedures

Because of the uniqueness of geophysical surveys, a review of associated procedures is not appropriate.

3.2. Preparation

3.2.1. Office

A. Review the RIP, Installation Generic Monitoring Plan Sampling Plan, Quality Assurance Plan, and Technical Data Management Plan.

B. Coordinate schedules/actions with the installation staff.

C. Obtain appropriate permission for property access.

D. Ensure the proper operation of all geophysical survey equipment, as appropriate, using the equipment manuals provided by the equipment manufacturer.

3.2.2. Documentation

A. Obtain a logbook from the QA officer.

B. Record results of the equipment check in the logbook.

C. Obtain a sufficient number of the appropriate ER Program data collection forms (see INDEX TO SOPs).

D. Consult the ER Program data administrator for a current list of information management codes, location IDs, and sample numbers used in the completion of data forms.

3.2.3. Field

A. Verify that the survey operator has the required equipment for the appropriate geophysical methods used. Be sure all the equipment, including support equipment, is complete and operational.

B. Establish grid and stake locations or set up traverses for location(s) of sampling stations.

C. Most geophysical instruments will be calibrated at the factory on a periodic basis, depending on the manufacturer's recommendation. However, calibration checks for certain instruments can be conducted in the field. Perform accuracy and reproducibility checks in the field by reoccupying base stations at periodic time intervals.

3.3. Operation

In geophysical survey data recording, store numerical data from surface geophysical surveys on IBM PC-compatible diskettes. On a daily basis, store data on at least three diskettes. Two diskettes remain at the work site as an original and backup. Ship the third diskette to the Document Control Office. Shipment should occur daily.

Use portable computers to download data from automatic recording devices and produce diskettes. In the event that the geophysical survey data is recorded without an automatic recording device or a portable computer, the subcontractor should provide a hard copy of the recorded data that documents the results of the geophysical survey.

Include the data fields listed below in records of surface geophysical data.

1. Site code
2. Location ID (or station)
3. Date
4. Time
5. Geophysical survey data

Record these data in the standard Information Management System (IMS) format. Examples of IMS codes and instructions for using the codes should be provided by the data administrator. Base station values and calibration measurements do not need to be recorded on diskette; however, they must accompany the diskette record in paper copy. Reserve the first record of each file for the site description and comments.

Include a diagram of the measurement locations with the data records on a daily basis. The diagram indicates grid alignment, station numbering (if used), and base station location(s). Record data using the standard IMS code format.

If more than one site is investigated in a day, record the data for each site as a separate file. Include a written description of each file, the file name, and site with the data diskette in shipment.

3.3.1. Electrical Resistivity

The electrical resistivity method measures the apparent electrical resistivity of the hydrogeological section that includes the soil, rock, and groundwater. An electrical current is injected into the ground by a pair of surface electrodes. The resulting potential field (voltage) is measured at the surface between a second pair of electrodes. Because of the length of the wire cables, the types of connections on the resistivity electrodes, and the manner in which the electrodes contact with the ground, there are a number of possibilities for poor electrical contact and short circuits in the resistivity array. These conditions are monitored by observing instrument readings and trends in the data.

Apparent resistivities are calculated and plotted during field acquisition as a means of quality control depth. Sounding curves should be relatively smooth. Abrupt changes

commonly occur in sounding and profiling data. Unwanted noise may be caused by near-surface inhomogeneities, electrode contact problems, or changes in hydrogeology.

3.3.2. Seismic Refraction

Seismic refraction techniques are used to determine the travel time or velocity of seismic waves within layers and interpret the thickness and depth of geologic layers. Seismic refraction methods are often used to map depths to specific horizons like bedrock, clay layers, and the water table. In addition to mapping natural features, other secondary applications of the seismic method include the location and definition of burial pits and trenches at hazardous waste sites.

Quality control can be achieved through the methods described below.

A. Check the seismic signal and noise conditions on the instrument display to verify the proper functioning of the source geophones and trigger cables and the correct setting of the instrument.

B. In cases where paper records are not produced, immediately plot arrival time picks made from the electronic display on a time/distance graph in the field. Problems with improper picks are often discovered through an early inspection of these plots.

C. If it is expected that the data are to be used for legal purposes or reviewed by persons other than the field party chief, make a hard copy of the data. Multi-channel systems provide a more efficient means of acquiring and presenting data than single-channel units.

D. Background or offsite data are often required for correlation to known geologic information and to establish clean background data. This information is also useful as a reference for evaluating complex site conditions.

E. If possible, obtain or install boring logs before the survey in order to minimize the possibility that hidden layers or velocity inversions will remain undetected.

F. The manufacturer should perform the electronic calibration of the timing circuits of the seismograph. Because these timing circuits are crystal controlled and have inherently low drift, this is rarely necessary. Normal annual factory maintenance should include such calibration.

G. Conduct a seismic profile at a standard base location periodically to check the operation of the instrument.

3.3.3. Electromagnetics

The electromagnetic method detects lateral and vertical variations of electrical conductivity in the subsurface environment. Quadrature component measurements relate to the apparent electrical conductivity of a material and are influenced by clay content, porosity, moisture content, pore fluid specific conductance, and permeability. These measurements are also influenced by highly conductive materials like metals and graphite. In-phase component measurements are particularly sensitive to highly conductive materials and sometimes used for metal detection. The EM is applicable for the assessment of natural hydrogeologic conditions and the mapping of many types of

contaminant plumes. Trench boundaries, buried conductive wastes, and steel drums, as well as metallic utility lines, can be located with EM techniques.

EM instruments are calibrated annually over a massive rock outcrop used as a geologic standard by the manufacturer. After calibration, the instruments will generally retain their accuracy for long periods. On large projects, establish a local standard site in the field. This will provide a reference base station to check the instrument's performance and allow correlation between instruments.

Calibration Check

A. Before conducting a survey, select a temporary site on location for daily base station measurements and calibration checks. Calibration checks should be made twice daily, before and after conducting daily survey operations. Readings will repeat within approximately 10%. Originals of all calibration records should remain at the site. Submit copies to the field geophysicist.

   NOTE: Do not make calibration checks in the presence of sources of cultural interference like power lines or buried utilities. Make them on a relatively flat surface outside of topographic lows and away from areas that may include subsurface waste materials.

B. Instrument stability should be checked by the field operating party when there is local or distant thunderstorm activity. Electromagnetic radiation from thunderstorms can generate noise in the EM system. Operations may have to be postponed during thunderstorms.

C. Exercise technical judgment so that conductivity readings recorded in the field are reasonable with respect to existing site conditions.

D. Record instrument sensitivity settings in the logbook if an automatic recording device is not used.

E. When using an automatic recording device, enter the readings from the first and last stations of each traverse in the logbook. Compare these data to data from the automatic recorder at the end of each day. Recorded data and field transcribed data must agree to within ± 5% to meet acceptability requirements.

3.3.4. Ground-Penetrating Radar

GPR uses high frequency radio waves to acquire subsurface information. From a small antenna that is moved slowly across the surface of the ground, energy is radiated downward into the subsurface and reflected back to the receiving antenna, where variations in the return signal amplitude versus time are continuously recorded. This produces a continuous cross-sectional picture or profile of shallow subsurface conditions. These responses are caused by radar wave reflections from interfaces of materials having different dielectric properties. Such reflections are often associated with natural hydrogeologic conditions like bedding, cementation, moisture, clay content, voids, fractures, and intrusions, as well as man-made objects. The radar method has been used at numerous hazardous waste sites to evaluate natural soil and rock conditions, as well as to detect buried wastes.

The radar system measures two-way travel time from the transmitter antenna to a reflecting surface and back to the receiver antenna. Calibration of the radar system and data requires the two-step process described below.

- First, accurately determine the total time window (range) set by the operator.
- Second, determine or estimate the electromagnetic velocity (or travel time) of the local soil/rock condition.

After completing these two steps, the radar unit data will be set for depths to particular features.

Calibrate the time window that has been picked for the survey by using a signal calibrator in the field. This device is used to produce a series of time marks on the graphic display measured in nanoseconds. These pulses are counted to determine the total time of the radar unit. A calibration curve can be designed for each radar system.

Trenches, buried pipes, and road culverts can provide a radar target of known depth. The depth of a known target, a radar record taken over the known target, and a time scale provided by the signal calibrator should provide a basic calibration record. From these data, a velocity can be accurately determined at the given target location. Because this approach may give accurate calibration at the specific site, the assumption must be made that conditions in other areas to be surveyed are the same as in the calibration areas. If they are not, errors will occur in determining depths.

If significant changes in soil type or moisture content occur with depth, velocity will not be the same throughout the vertical radar profile. Therefore, the vertical radar depth scale will be nonlinear.

Calibration Check

A. Before conducting a survey, take a GPR traverse over a buried object of known depth (if available at a particular site). From the two-way travel time and the measured burial depth of the object, the average electromagnetic wave velocity in soil can be calculated from the equation below.

$$V = 2d/t$$

The average dielectric constant of the soil is then calculated using

$$Er = c^2/v^2 = 1/v^2$$

where

v= average electromagnetic wave velocity, feet/nanosecond
t= two-way travel time, nanoseconds
d= distance of antenna to the buried object, feet
Er= average relative dielectric constant of the soil (unitless)
c= velocity of light in air equal to 1 foot/nanosecond
v= average electromagnetic wave velocity of the soil, feet/nanosecond

Note: The above assumes a soil with a relative magnetic permeability of 1 (unitless).

Exercise technical judgment so that soil velocity and relative dielectric constant values are reasonable with respect to existing site conditions.

B. Repeat a short GPR traverse twice daily over a known feature before and after conducting daily operations. Exercise technical judgment to insure that any variations between repeat readings are caused be changing soil conditions, rather than the electronics.

3.3.5. Metal Detection

Metal detectors (MD) are electromagnetic devices designed to locate metallic objects buried near the surface. In hazardous waste site investigations, MDs are invaluable for detecting utility lines, survey markers, steel drums buried at shallow depths, and delineating areas that may potentially include metallic waste materials.

Metal detectors respond to nearby metallic objects in a relative way. For instance, closer or large metallic targets create a greater output level than more distant or smaller ones. An experienced operator can usually make a reasonably accurate estimate of target size and depth. Any attempt at detailed calibration will probably be useless because of the many variables involved. For example, calibration curves relating MD meter response to a steel drum as a function of distance may be accurate under a given test standard condition. Unfortunately, these curves are seldom valid because of the variability and complexity of actual field conditions. In addition, the operator cannot easily determine the difference between a single drum located at medium depth and several drums at deeper locations. However, he/she can report that drum-sized targets are present in certain specific areas.

3.3.6. Magnetometer

Magnetometers are used to locate metallic objects buried near the surface like buried well casings, utility lines, and survey stakes. At hazardous wastes sites, magnetometers are commonly used to locate buried steel drums and tanks and delineate the boundaries of trenches and landfills. Ferrous metal objects carried by the operator will have a detrimental effect on the accuracy of the magnetometer data. Therefore, metal items like rings, watches, belt buckles, coins, and steel-toed boots should not be worn by the survey team.

Total field and vertical field measurements may be corrected for the diurnal variation of the earth's magnetic field by employing a reference base station magnetometer. Changes in the earth's field are removed by adding or subtracting variations of fixed base station readings from the moving survey data. Gradiometers do not require the use of a base station because they inherently eliminate time variation in the data.

Calibration Check

A. Conduct a swing sensor test with the proton precession magnetometer before initiating operations at a site and at least once more during the day. Four readings with the sensor oriented 90° to the other readings should be taken with the operator moving with the sensor. Variations greater than one gamma should not be observed. Correct any directional bias by washing the sensor with ordinary soap and water and maintaining an adequate distance between the sensors and battery pack.

B. Obtain a daily background reading in the immediate vicinity of the site to be surveyed. This reading should be outside the influence of all possible sources of cultural magnetic fields (for example, power lines or pipeline). Exercise technical judgment so that the background reading is reasonable regarding published data for the total magnetic field intensity at the site latitude and longitude. This daily background reading should repeat to within reasonable diurnal variations in the earth's magnetic field.

C. Take site-specific sequential readings twice daily, before and after normal magnetic surveying operations. These readings (within 10 sec of each other) should be taken at any onsite location that is not influenced by cultural magnetic fields and recorded in the logbook. Three to four sequential readings should be sufficient. In the absence of magnetic storms, the readings should compare within several tenths of a gamma. Repeatability during magnetic storms may degrade to one gamma or more.

D. Take base station readings so that the effects of the diurnal variation of the earth's magnetic field may be removed from the data. In addition, magnetic storms (sudden and violent variations in the earth's magnetic field) can be detected if the base station sampling frequency is high enough. It may be prudent to suspend operations during a magnetic storm and resume them when the storm has passed. Periods of rapid variation may be documented at a permanent base station set up at the site where continuous readings are automatically recorded approximately every 10 to 15 min. Alternatively, a base station(s) may be reoccupied during the survey at intervals of 45 to 60 min.

E. The use of automatic recording magnetometers requires recording the magnetometer readings for the first and last station of each traverse in a logbook. Compare the data recorded in the logbook with data from the automatic recording device. Data recorded in the logbook should be within one gamma of the values derived from the recording device.

F. During cold weather, maintain the battery pack for a fluxgate magnetometer at a relatively warm temperature. This is most easily accomplished by surveying with the battery pack beneath the operator's coat or jacket.

3.4. Postoperation

3.4.1. Field

A. If the equipment has come in contact with contaminated soil or wastes, decontaminate all equipment (see SOP 1.6, General Equipment Decontamination).

B. Make sure all survey locations are staked and the location ID readily visible on the location stake.

3.4.2. Documentation

A. Record all observations and notes concerning any uncompleted work in the logbook.

B. Complete logbook entries, verify the accuracy of entries, and sign/initial all pages.

C. Review data collection forms for completeness.

3.4.3. Office

A. Deliver original forms and logbooks to the site manager for technical review. He/she will review, sign forms, and transmit to the document control officer (copies to the files) for eventual delivery to the Department of Energy.

B. Inventory equipment and supplies. Repair or replace all broken or damaged equipment. Replace expendable items. Return equipment to the equipment manager and report incidents of malfunction or damage.

4. SOURCE

Benson, R. C., R. A. Glaccum, and M. R. Noel. 1983. "Geophysical Techniques and Sensing Buried Wastes and Waste Migration." U.S. Environmental Protection Agency document, Las Vegas, Nevada.

5. APPENDIXES

None

STANDARD OPERATING PROCEDURE 1.3

SAMPLE CONTROL AND DOCUMENTATION

1. PURPOSE

To define the steps necessary for sample control and identification, data recording, and chain-of-custody documentation.

2. DISCUSSION

The Remedial Investigation Plan (RIP) contains specific details about the procedures and equipment for this SOP. Refer to the RIP for the type of samples to be collected and the destination of the collected samples. Collection and measurement of samples and the documentation of data will be performed as described in specific SOPs.

This SOP describes the methodology of sample control and documentation for all projects. Sample control and documentation are necessary to ensure the defensibility of data and to verify the quality and quantity of work performed in the field. Accountable documents include logbooks, data collection forms, correspondence, sample labels or tags, chain-of-custody reports, photographs, and analytical records. Waterproof black ink must be used in recording all data in documents bearing serial numbers.

The logbooks are under the supervision of the quality control officer. There may be several logbooks; for example, there may be a separate logbook for field activities, one for samples, and one for instruments. The quality control officer numbers the logbooks and assigns them to individuals designated for specific tasks of the project. All information pertinent to a field activity must be entered into a logbook. A record of uncompleted work is kept in a logbook. All project logbooks are turned over to the document control officer at the end of each work period and to a central file at the end of the field activity.

All logbooks are numbered and bound, and the pages are numbered. Waterproof black ink is used for recording all data. Logbook pages should never be removed, and no data should removed. To change an incorrect entry, the individual draws a line through the entry, writes the change above the entry, dates and initials the change. If anyone other than the person to whom the logbook is assigned makes an entry, that person dates and signs the entry.

Record all information pertinent to the sampling activity (for example, date, site, ID number, and location) in the logbook. Note the field conditions, weather conditions, and any unusual circumstances. Notes should be as descriptive and inclusive as possible. A person reading the entries should be able to reconstruct the sampling situation from the recorded information. Language should be objective, factual, and free of personal feelings and inappropriate terminology.

3. PROCEDURES

3.1. Associated Procedures

Before every operation, a review of the SOPs 1.1-1.10 is necessary. These SOPs contain information on the performance of field activities. They should be consulted for specific information about equipment and supplies; sample collection, preservation, packaging, and shipping; decontamination procedures; and documentation requirements. Procedures directly associated with this SOP are listed below.

SOP No.	SOP Title
1.1	General Instructions for Field Personnel
1.4	Sample Containers and Preservation
1.5	Guide to the Handling, Packaging, and Shipping of Samples

3.2. Preparation

3.2.1. Office

A. Review the RIP and SOPs listed in Section 3.1.

B. Coordinate schedules/actions with the installation staff.

C. Obtain appropriate permission for property access.

D. Assemble the equipment and supplies listed in Appendix 5.1. Ensure the proper operation of all sampling equipment.

E. Notify the analytical laboratory of sample types, the number of samples, and the approximate arrival date.

F. Contact the carrier that will transport samples to obtain information on regulations and specifications.

3.2.2. Documentation

A. Obtain a logbook from the QA officer.

B. Record results of the equipment check in the logbook.

C. Obtain a sufficient number of the appropriate ER Program data collection forms (see INDEX TO SOPs).

D. Consult the ER Program data administrator for a current list of information management codes, location IDs, and sample numbers used in the completion of data forms.

3.2.3. Field

Field preparation requires organizing sample bottles, sample labels, and documentation in an orderly, systematic manner that promotes consistency and traceability of all data. Appropriate items should be completed before a sample is collected.

A. Record all pertinent information (for example, date, site, ID number, and location) in the logbook. Note field conditions, unusual circumstances, and weather conditions.

B. Fill out information on the sample identification label and attach the label to a sample bottle.

C. Complete initial information required on data collection forms.

3.3. Operation

3.3.1. Logbook

Enter all information pertinent to a field activity in a bound logbook with consecutively numbered pages. Enter information that does not require data entry into the logbook. If not included on a data collection form, entries in the logbook should include at least the information listed below.

- Date and time of entry
- Purpose of sampling
- Name and address of field contact
- Site identification
- Type of process producing waste (if known)
- Type of waste (sludge or wastewater)
- Description of sample waste components and concentrations
- Sample identifier and size of sample taken
- Description of sampling point
- Date and time for collection of sample
- Collector's sample identification number(s) and/or name
- References of the sampling site (like maps or photographs)
- Field observations and sampling locations
- Associated field measurements

- Method of sample collection, preservation techniques, and any deviations or anomalies noted

- Transfer of a logbook to individuals designated for specific tasks of the project

- Any uncompleted work

Because sampling situations vary widely, make notes as descriptive and inclusive as possible. A person reading the entries should be able to reconstruct the sampling situation from the recorded information. Use language that is objective, factual, and free of personal feelings or any other inappropriate terminology. If anyone other than the person to whom the logbook was assigned makes an entry, he/she should date and sign the entry. Never remove logbook pages. If a mistake is made, draw a single line through the mistake, write the new information above the line, and date and initial the change.

3.3.2. Photographs

Photographs provide the most accurate record of the field worker's observations. They can be significant during future inspections, informal meetings, and hearings. A photograph must be documented to be a valid representation of an existing situation. For each photograph taken, record the items listed below in the logbook and on the back of each processed photograph.

- Date and time

- Signature of photographer

- Name and identification number of site

- Type of camera, lens, f-stop, shutter speed, and film used

- General direction faced and description of the subject

- Distance from photographer to object

- Location at the site

- Sequential number of photograph and the roll number

Any remarks about the contents of a photograph could jeopardize its value as legal evidence, so limit comments to the photograph's location. Photographs should be taken with a perspective similar to that afforded by the naked eye. Telephoto or wide-angle shots cannot be used in enforcement proceedings.

3.3.3. Sample Labels

Use soil and water sample identification labels to tag or label sample containers. Seal each sample immediately after it is collected and labeled with waterproof black ink. Label tags may be filled out before collection to minimize the handling of the sample containers. Appendix 5.1, Soil Sample and Water Sample Identification Labels, provides examples of the common sample labels to be used.

Instructions for completing the labels are included in Appendix 1.3, Data Form Completion.

When appropriate, use an etching tool to mark sample containers in the field, rather than immediately applying a sample label or tag. This avoids possible label contamination problems and subsequent decontamination difficulties. In this case, write the data intended for the sample label in the logbook and transcribe them onto the label after the sample containers have been decontaminated.

Firmly attach the labels to the sample containers. The containers must be dry enough for gummed labels to be securely attached.

3.3.4. Sample Collection and Inventory

The number of persons involved in collecting and handling samples should be kept to a minimum. Use the guidelines established in this SOP and SOP 1.5, Guide to the Handling, Packaging, and Shipping of Samples. Complete data collection forms at the time the sample is collected and have the sample collector(s) sign or initial them. Include the date and time. On liquid containers, mark the liquid level with waterproof black ink. This requirement is not necessary for completely filled volatile organics analysis (VOA) septum vials. If the volume received by the laboratory is different than when collected, the sample container may have leaked, been tampered with, or spilled hazardous materials. Use the Custody Transfer Record/Lab Work Request form, Appendix 5.2, to inventory all samples collected in the field. Instructions for the form are in Appendix 5.3, Data Form Completion.

3.3.5. Chain of Custody

A. Objectives

The primary objective of the chain-of-custody procedure is to create an accurate written record that can be used to trace the possession and handling of the sample from the moment of its collection through analysis and introduction as evidence. A sample is in someone's custody when one of the criteria listed below has been satisfied.

1. The sample is in one's actual possession.

2. The sample is in one's view after being in one's physical possession.

3. The sample is in one's physical possession and is then locked up so that no one can tamper with it.

4. The sample is kept in a secured area that is restricted to authorized personnel.

B. Transfer of Custody and Shipment

When transferring the samples, the transferee should sign and record the date and time on the Custody Transfer Record/Lab Work Request form. Custody transfers made to a sample custodian in the field should account for each sample, although samples may be transferred as a group. Every person who takes custody should fill in the appropriate section of the

Custody Transfer Record/Lab Work Request form. To reduce the number of custody records, minimize the number of custodians in the chain of possession.

The field custodian is responsible for properly packaging and dispatching samples to the appropriate laboratory. This responsibility includes filling out, dating, and signing the appropriate portion of the Custody Transfer Record/Lab Work Request form.

Send all packages to the laboratory with the chain-of-custody record and other pertinent informtion such as radioactive screening results. Retain a copy of these documents at the originating office (either carbon or photocopy). Register mailed packages with a return receipt requested. For packages sent by common carrier, retain receipts as part of the permanent chain-of-custody documentation. Pack samples so that they do not break in shipment. Seal or lock the package so that any tampering can be readily detected. SOP 1.5, Guide to the Handling, Packaging, and Shipping of Samples, describes these procedures in detail.

3.4. Postoperation

3.4.1. Field

A. Verify that all sample bottles have been correctly identified and labels have all necessary information (location, time, and date).

B. Cross-check filled sample bottles in possession against those recorded in the logbook. Maintain custody of filled sample bottles by keeping them in actual possession, within view, locked or sealed up to prevent tampering, or bringing them into a secure area.

C. Prepare samples for transport according to SOP 1.3, Sample Control and Documentation; SOP 1.4, Sample Containers and Preservation; and SOP 1.5, Guide to Handling, Packaging, and Shipping of Samples.

3.4.2. Documentation

A. Record data and any uncompleted work in the logbook.

B. Complete logbook entries, verify the accuracy of entries, and sign/initial all pages.

C. Document the chain of custody on the Custody Transfer Record/Lab Work Request form.

D. Review data collection forms for completeness.

3.4.3. Office

A. Deliver original forms and logbooks to the site manager for technical review. He/she will review, sign forms, and transmit to the document control officer (copies to the files) for eventual delivery to the Department of Energy.

B. Inventory equipment and supplies. Repair or replace all broken or damaged equipment. Replace expendable items. Return equipment to the equipment manager and report incidents of malfunction or damage.

C. Contact the analytical laboratory to ensure that samples arrived safely and instructions for sample analyses are clearly understood.

4. SOURCE

EPA. 1986. "RCRA Ground-water Monitoring Technical Enforcement Guidance Document." U.S. Environmental Protection Agency document. Washington, D.C.: U.S. Government Printing Office.

5. APPENDIXES

5.1. Soil Sample and Water Sample Identification Labels

5.2. Custody Transfer Record/Lab Work Request Form

5.3. Data Form Completion

APPENDIX 5.1

SOIL SAMPLE AND WATER SAMPLE IDENTIFICATION LABELS

SOIL SAMPLE IDENTIFICATION LABEL

FACILITY CODE _____ LOCATION ID _____

SAMPLE ID _____ LOG DATE _____

LAB CODE _____ LOG TIME _____

SAMPLER _____ LOGGER CODE _____

SAMPLE DEPTH INTERVAL FROM DATUM

BEGINNING DEPTH (FT FROM DATUM) _____

ENDING DEPTH (FT FROM DATUM) _____

ANALYSIS REQUESTED _____

COMMENTS _____

SSL-132

WATER SAMPLE IDENTIFICATION LABEL

FACILITY CODE _____ LOCATION ID _____

SAMPLE ID _____ LOG DATE _____

LAB CODE _____ LOG TIME _____

SAMPLER _____ LOGGER CODE _____

ANALYSIS REQUESTED _____

PRESERVATION METHOD _____

COMMENTS _____

WSL-133

APPENDIX 5.2

CUSTODY TRANSFER RECORD/LAB WORK REQUEST FORM

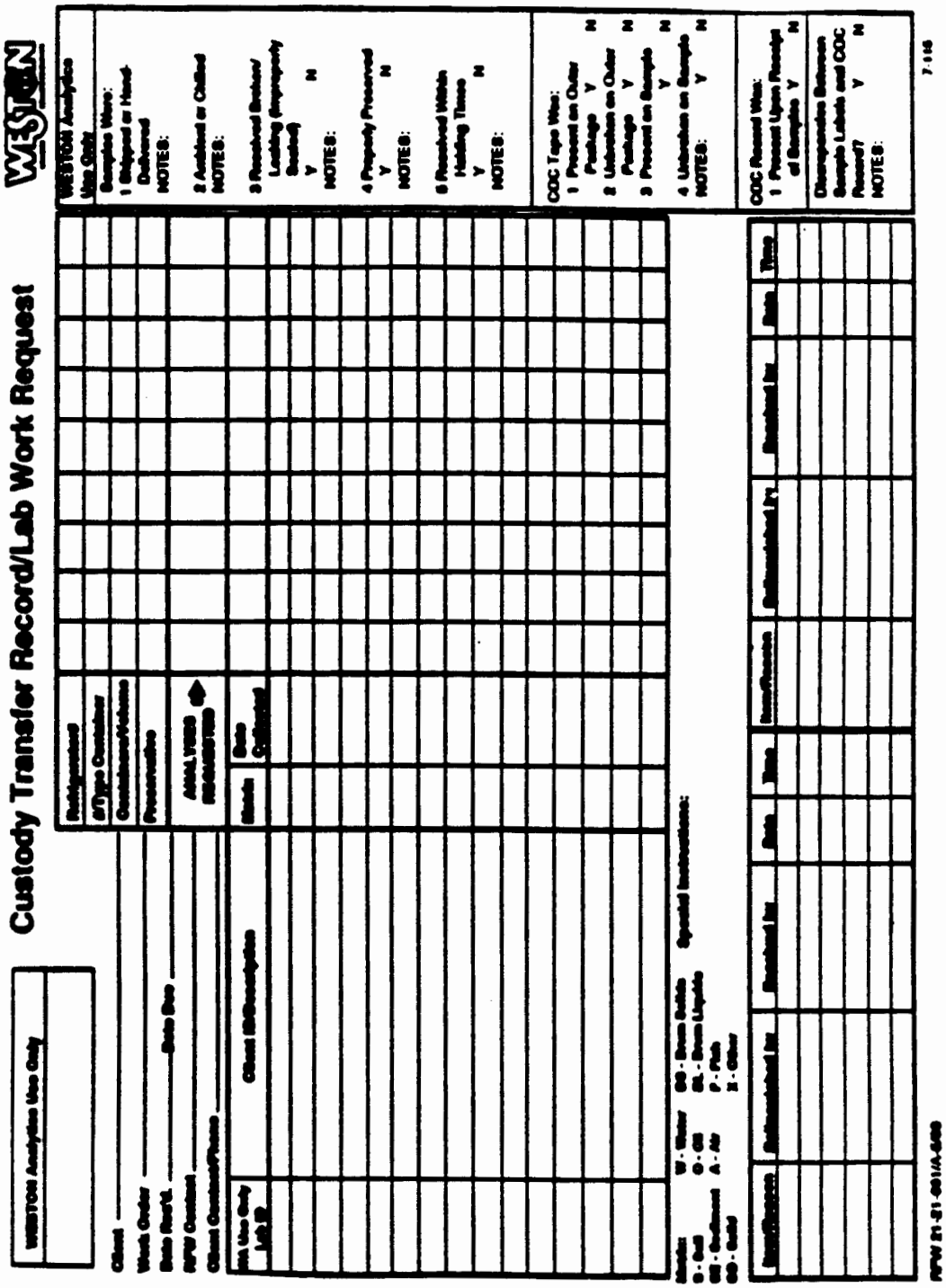

APPENDIX 5.3

DATA FORM COMPLETION

Use a pen with black ink that is not water soluble (not a felt-tip pen). Make an entry in each blank. Where there is no data entry, enter UNK for Unknown, NA for Not Applicable, or ND for Not Done. If any procedure was not performed as prescribed, give the reason for the change or omission on the form. To change an entry, draw a single line through it, add the correct information above it, and initial the change.

SOIL SAMPLE IDENTIFICATION LABEL

1. Facility Code. Five-character code abbreviating the facility name where program activity is being conducted. The first three characters indicate the facility, and the remaining two numbers designate the specific site within the facility.

2. Sample ID. Four-digit number assigned to ensure that data collected retains uniqueness from other data collected at the same location ID.

3. Lab Code. Three-character code identifying the company responsible for performing the analysis of water, soil, biota, and air samples.

4. Sampler. Name of person(s) collecting sample.

5. Location ID. Four-character code assigned sequentially to each borehole, test pit, or surface location where chemical, biological, radiological, and other measurements are taken.

6. Log Date. The date the information recorded on the label was obtained in the format DD-MMM-YY (01-JAN-88).

7. Log Time. The time the sample was collected (HH:MM).

8. Logger Code. Three-character or four-character code identifying the company responsible for collecting the information recorded on the form.

9. Sample Depth Interval from Datum:

   a. Beginning Depth (Ft From Datum). Depth from the ground surface to the top of the sampling interval in the format of feet and tenths of feet.

   b. Ending Depth (Ft From Datum). Depth from the ground surface to the bottom of the sampling interval in the format of feet and tenths of feet.

10. Analysis Requested. Type of analysis requested.

11. Comments. Any additional information.

APPENDIX 5.3, Continued

WATER SAMPLE IDENTIFICATION LABEL FORM

1. Facility Code. Five-character code abbreviating the facility name where program activity is being conducted. The first three characters indicate the facility, and the remaining two numbers designate the specific site within the facility.

2. Sample ID. Four-digit number assigned to ensure that data collected retains uniqueness from other data collected at the same location ID.

3. Lab Code. Three-character code identifying the laboratory responsible for performing the analysis.

4. Sampler. Name of person(s) collecting sample.

5. Location ID. Four-character code assigned sequentially to each borehole, test pit, or surface location where chemical, biological radiological, and other measurements are taken.

6. Log Date. The date the information recorded on the form was obtained in the format DD-MMM-YY (01-JAN-88).

7. Log Time. Time the sample was collected (HH:MM).

8. Logger Code. Three-character or four-character code identifying the company responsible for collecting the information recorded on the form.

9. Analysis Requested. Type of analysis requested from the laboratory.

10. Preservation Method. Type of preservative used.

11. Comments. Any additional information.

APPENDIX 5.3, Continued

CUSTODY TRANSFER/LAB WORK REQUEST FORM

1. Received By. Completed by lab.

2. Date. Completed by lab.

3. Assigned To. Completed by lab.

4. Client. Client name.

5. Client Contact. WESTON person who will be laboratory contact.

6. Phone. Phone number of WESTON contact.

7. RFW Contact. Laboratory contact.

8. Date Due. Date analysis is due from the laboratory.

9. Project Number. Project number under which work is billed.

10. Sample No. Completed by laboratory.

11. Client ID No. Three-part identifier consisting of facility code, location ID, and sample ID and separated by dashes (for example, KCP01-01-01 and PXT02-0002-0001). See the ER Program data administrator for conventions to identify field quality control samples.

12. Description. Any descriptive information about the sample.

13. Matrix. Matrix type for sample; see valid matrix codes on lower half of form.

14. Date Collected. Date the sample was collected in the format DD-MMM-YY (01-JAN-88).

15. Container/Preservative. Container size and type (500-ml glass).

16. Analysis Requested. The type of analysis requested for each sample. The column heading indicating the type.

    PCB=Polychorinated Biphenyl

    HE=High Explosive

    HSL=Hazardous Substance List

    EPTOX=Extraction Procedure Toxicity

    VOA=Volatile Organic Analysis

APPENDIX 5.3, Concluded

CUSTODY TRANSFER/LAB WORK REQUEST FORM

BNA=Base Neutral Acid

TCLD=Toxic Characterization Leach Procedure

PEST=Pesticides

MAJ=Major Cation/Anion

17. Matrix. Valid matrix codes.

18. Special Instructions. The special instructions box should include

    - a listing of those samples that are radioactive (anything above background is considered radioactive),

    - information such as the use of CLP QC/Standard commercial deliverable, and

    - specific analytical methods to be used.

19. Items/Reason. The reason the custody is transferred for all or selected items of the shipment.

20. Relinquished By. Signature of person sending samples.

21. Received By. Person or (shipping company) who received samples.

22. Date. Date sample is sent.

23. Time. Time sample is sent.

STANDARD OPERATING PROCEDURE 1.4

SAMPLE CONTAINERS AND PRESERVATION

1. PURPOSE

To provide guidance in the selection of suitable containers for samples, container cleaning, required sample volumes, sample collection, holding times, and the recommended preservation techniques for water, wastes, sediments, sludges and soil samples.

2. GENERAL DISCUSSION

The Remedial Investigation Plan (RIP) provides information about the scope and details of a given operation and establishes the number, types, and analyses of field samples (including field analyses). Refer to the RIP for the procedures and equipment to be used in collecting samples. Collection and measurement of samples and the documentation of data will be performed as described in the associated procedures.

In choosing a sample container, the ideal material should be nonreactive with the sample and the particular analytical parameter to be tested. Glass or Teflon containers must be used with samples analyzed for organic compounds to prevent the introduction of extraneous organic compounds, such as those that might be leached from plastic containers. The rigid plastic screw caps for the bottles must be Teflon lined to prevent contamination.

Once a sample has been collected, steps must be taken to preserve the sample's chemical and physical integrity during transport and storage before analysis is conducted. The type of sample preservation required will vary according to the sample type and the parameter to be measured.

3. PROCEDURES

3.1. Associated Procedures

Before every operation, a review of the SOPs 1.1-1.10 is necessary. These SOPs contain information on the performance of field activities. They should be consulted for specific information on equipment and supplies; sample collection, preservation, packaging, and shipping; and documentation requirements. Procedures directly associated with this SOP are listed below.

SOP No.	SOP Title
1.3	Sample Control and Documentation
1.5	Guide to the Handling, Packaging, and Shipping of Samples
1.6	General Equipment Decontamination
2.8	Sampling for Volatile Organics

3.2. Preparation

3.2.1. Office

A. Review the RIP and SOPs listed in Section 3.1.

B. Coordinate schedules/actions with the installation staff.

C. Obtain appropriate permission for property access.

D. Assemble the equipment and supplies listed in Appendix 5.1. Ensure the proper operation of all sampling equipment.

E. Notify the analytical laboratory of sample types, the number of samples, and the approximate arrival date.

F. Contact the carrier that will transport samples to obtain information on regulations and specifications.

3.2.2. Documentation

A. Obtain a logbook from the QA officer.

B. Record results of the equipment check in the logbook.

C. Obtain a sufficient number of the appropriate ER Program data collection forms (see INDEX TO SOPs).

D. Consult the ER Program data administrator for a current list of information management codes, location IDs, and sample numbers used in the completion of data forms.

3.2.3. Sample Container Preparation

Sample containers will vary according to the matrix and nature of the sample to be collected. Wide-mouth containers are generally used for soils and wastes; narrow-mouth containers are used for water. Calculations should be made to determine the number and type of containers required for the sampling effort.

Procurement of containers should be initiated as early as possible to avoid unavailability and shipping delays and to satisfy cleaning requirements. Obtain the required number of sample bottles included in the RIP of a type consistent with recommendations in EPA-600/4-79-020 (EPA 1979). Sample containers can usually be obtained directly from the laboratory performing the analyses.

A. Container Type

1. Identify the containers required for analysis by matrix as shown in Appendixes 5.2 through 5.7 (for example, amber glass, narrow-mouth bottles for PCB analysis of water samples).

2. Calculate the number of each type of container required by including duplicates and blanks with the number of investigative samples specified in the RIP.

B. Container Cleaning

Containers precleaned to EPA specifications may be obtained from suppliers at additional cost. If obtained as is, follow procedures outlined below to wash containers and caps. The person washing containers must wear gloves.

1. Inorganic and general parameters

   a. Wash containers, septa or liners, and closures in hot tap water with laboratory-grade, nonphosphate detergent.

   b. Rinse three times with tap water.

   c. Rinse three times with ASTM Type 1 deionized water.

   d. Oven dry containers, septa or liners, and closures.

   e. Remove containers, septa or liners, and closures from oven.

   f. Place liners in closures (Teflon side down) and place on containers. Containers should not be removed from the preparation room until sealed.

2. Trace metals

   For certain parameters, a special cleaning procedure is needed to avoid adsorption or contamination resulting from interaction with container walls. These procedures are outlined below.

   a. Wash containers, closures, and Teflon liners in hot tap water with laboratory-grade, nonphosphate detergent.

   b. Rinse three times with tap water.

   c. Rinse one time with 1:1 nitric acid.

   d. Rinse three times with ASTM Type 1 deionized water.

   e. Air dry in a contaminant-free environment.

   f. Place liners in closures and place closures on containers. Containers should not be removed from the preparation room until sealed.

3. Organics

   a. Wash containers, closures, and Teflon liners in hot tap water with laboratory-grade, nonphosphate detergent.

   b. Rinse three times with tap water.

   c. Rinse one time with 1:1 nitric acid.

   d. Rinse three times with ASTM Type 1 deionized water.

   e. Rinse one time with pesticide-grade methylene chloride.

f. Oven dry.

g. Remove containers, closures, and Teflon liners from oven.

h. Place Teflon liners in closures and place closures on container. Do not remove containers from preparation area until sealed.

4. Sterilization

a. For microbiological analyses, sterilize the container and its stopper/cap by autoclaving at 121°C for 15 min or by dry heat at 180°C for 2 hrs. Heat-sensitive plastic bottles may be sterilized with ethylene oxide at low temperatures.

b. The sample bottles can be wrapped with aluminum foil before sterilization. Remove the protective wrapping after the sample is taken to facilitate cleaning the bottle before shipment to the analytical laboratory.

c. An acceptable alternative for emergency or field use is the sterilization of containers by boiling in water for 15 min.

3.2.4. Sample Volume

The volume of sample collected should be sufficient to perform all the required analyses plus an additional amount to provide for any quality control needs, split samples, or repeat examination. The volumes listed in Appendixes 5.2 through 5.7 are intended as general guidelines. The laboratory receiving the sample should be consulted for specific volume requirements, and these should be specified in the RIP.

NOTE: A sufficient number of containers must be available to ship the proper sample volume. For example, Department of Transportation (DOT) and International Air Transport Association (IATA) regulations limit the size of a sample container to 16 oz if the contents may include hazardous materials. In this case, two 500-ml or four 250-ml containers would be required to ship a one-liter fluid sample. See SOP 1.5, Guide to the Handling, Packaging, and Shipping of samples for additional information.

3.2.5. Sample Preservation

Sample containers may arrive at the site with the proper type and amount of preservatives in them. If onsite preservation of the samples is necessary, the proper reagents should be provided for the field crew in an easily usable form that can be added at the time of sampling. Preservation required for the specific analyses requested may be determined by using Appendixes 5.2 through 5.7. Materials commonly needed for sample preservation are listed below.

1. Small bottles of pelletized NaOH

2. Ascorbic acid crystals

3. Lead acetate paper and pH paper

4. Calibrated sampling scoops

5. Reagent-grade acids (HNO_3, HCl, and H_2SO_4) in Safe-Kote bottles

6. Calibrated dispenser bottles (0.5 to 2 ml) for acids.

3.2.6. Field

The appropriate number and type of precleaned containers, along with preservatives, equipment, and packaging containers, should be stored in a facility that can be locked or guarded. The storage facility should be located near the site and decontamination staging area, but should also be accessible to freight trucks that will be delivering new container shipments and transporting samples to the laboratory.

3.3. Operation

A. Soils/Wastes Sample Collection

NOTE: All individuals in the sampling area must wear gloves appropriate to their tasks. Only the persons collecting samples and filling sample containers must discard their gloves between sampling tasks.

1. While wearing protective gloves, fill the bottle with the sample. Wet soils should have enough headspace to allow for expansion.

2. Take extreme care to avoid contamination of the bottles or caps. Remove the cap just before filling and replace it as soon as possible after filling. Avoid any personal contact with the inside of the bottle or cap.

3. Clean the exterior of the bottle with a wipe moistened with deionized water, followed by a wipe moistened with methanol. When appropriate, implement SOP 1.6, General Equipment Decontamination. Attach a completed sample label (according to SOP 1.3, Sample Control and Documentation) and cover with clear tape. The tape should extend at least 1/4 inch beyond the edges of the label. Wrap a strip of Parafilm around the junction of the bottle and cap.

4. Preservation of soil samples is usually accomplished by protecting the sample from UV light by using an amber bottle and keeping the sample cool.

5. If required, place the container in a cooler. Maintain the samples at a cool temperature with frozen packaged ice (for example, Blue Ice) or ice cubes sealed in two plastic bags. Avoid freezing the sample by packing to prevent contact between the coolant and the sample container.

6. If samples are not delivered to the laboratory on a daily basis, check ice chests and insulated boxes every 24 hrs and replace thawed ice or Blue Ice packs as needed.

7. Avoid exposing the sample to extreme hot or cold temperatures and intense sunlight, even if no specific preservation is recommended.

8. EPA guidance recommends that a 4°C temperature be maintained in the sample container before and during shipment. The temperature in the packed container should be confirmed to be 4°C before the samples are shipped. A temperature reading from the middle of the package near the containers is satisfactory for this purpose.

The temperature should be checked again at the analytical laboratory. Record both temperatures in the special instructions section of the Custody Transfer Record/Lab Work Request form (see SOP 1.3., Sample Control and Documentation). If a continuous temperature record can be obtained during the shipment period, record the maximum temperature in the container on the custody transfer form.

B. Water Sample Collection

NOTE: All individuals in the sampling area must wear gloves appropriate to their tasks. Only the persons collecting samples and filling sample containers must discard their gloves between sampling tasks.

1. Before collecting samples for organics and CN, use the Hach Test Kit for residual chlorine and sulfides. If present, preserve samples according to instructions in Appendix 5.2, Recommendation for Sampling and Preservation of Water Samples According to Measurement (for example, $Na_2S_2O_3$ to organic samples).

2. Collect samples directly in the appropriate container.

3. Do <u>not</u> filter unless specified in the Sampling Plan.

4. Do <u>not</u> rinse the container.

5. Slowly fill each container almost full, except VOAs (see SOP 2.8, Sampling for Volatile Organics).

6. Add any prescribed preservative.

7. Cap the container, shake, and reopen it.

8. If using acid or base preservative, check the pH adjustment with pH paper.

9. If necessary, add more preservative.

10. Complete steps 3 and 5-8 from Section 3.3.A.

11. If an error was made in collection, discard the entire bottle and start with a new one.

C. Holding Time

In general, analyze samples as soon as possible after collection. Some parameters are required to be analyzed in the field (See Appendix 5.2). Allowable holding times are listed as guidelines. They represent the maximum times that samples are considered valid. There are instructions in the RIP for delivering the samples to the laboratory as soon as possible. (See SOP 1.5, Guide to the Handling, Packaging, and Shipping of Samples).

3.4. Postoperation

3.4.1. <u>Field</u>

A. Store unused, clean sample bottles in a clean environment for later use.

B. Clean acid dispensers and store them dry for the next field operation.

C. Ensure that all equipment is accounted for, decontaminated (see SOP 1.6, General Equipment Decontamination), and ready for shipment.

D. Restore the site to presampling conditions as specified in the RIP.

E. Make sure all wells are labeled, sampling locations are properly staked, and the location ID is readily visible on the guard pipe or location stake.

F. Prepare samples for transport according to SOP 1.3, Sample Control and Documentation; SOP 1.4, Sample Containers and Preservation; and SOP 1.5, Guide to Handling, Packaging, and Shipping of Samples.

3.4.2. Documentation

A. Record any cleanup procedures and any uncompleted work (like site restoration or uncompleted sampling) in the logbook.

B. Complete logbook entries, verify the accuracy of entries, and sign/initial all pages.

C. Review data collection forms for completeness.

3.4.3. Office

A. Deliver original forms and logbooks to the site manager for technical review. He/she will review, sign forms, and transmit to the document control officer (copies to the files) for eventual delivery to the Department of Energy.

B. Inventory equipment and supplies. Repair or replace all broken or damaged equipment. Replace expendable items. Return equipment to the equipment manager and report incidents of malfunction or damage.

C. Contact the analytical laboratory to ensure that samples arrived safely and instructions for sample analyses are clearly understood.

4. SOURCES

Korte, Nic, and Peter Kearl. 1985. "Procedures for the Collection and Preservation of Groundwater and Surface Water Samples and for the Installation of Monitoring Wells: Second Edition." U.S. Department of Energy report GJ/TMC-08. Technical Measurements Center, Grand Junction Project Office, Grand Junction, Colorado.

EPA. 1982. "Handbook for Sampling and Sample Preservation of Water and Wastewater." U.S. Environmental Protection Agency report EPA-600/4-82-029. Washington, D.C.: U.S. Government Printing Office.

EPA. 1983. "Methods for Chemical Analysis of Water and Wastes." U.S. Environmental Protection Agency report EPA-600/4-79-020. Washington, D.C.: U.S. Government Printing Office.

EPA. 1983. "Manual of Groundwater Quality Sampling Procedures." U.S. Environmental Protection Agency report EPA/600/2-81-160. Washington, D.C.: U.S. Government Printing Office.

EPA. 1984. "Test Methods for Evaluation of Solid Waste." 2d ed. U.S. Environmental Protection Agency report EPA-SW-846. Washington, D.C.: U.S. Government Printing Office.

EPA. 1985. "Practical Guide for Groundwater Sampling." U.S. Environmental Protection Agency report EPA/600/2-85/104. Washington, D.C.: U.S. Government Printing Office.

EPA. 1986. "RCRA Groundwater Monitoring Technical Enforcement Guidance Document." U.S. Environmental Protection Agency document OSWER-9950.1. Washington, D.C.: U.S. Government Printing Office.

5. APPENDIXES

5.1. Equipment and Supplies Checklist

5.2. Recommendation for Sampling and Preservation of Water Samples According to Measurement

5.3. Sampling and Preservation Procedures for RCRA Groundwater Detection Monitoring

5.4. Analysis Plan for Soil/Sediment Samples

5.5. Sample Containers for Waste

5.6. Containers for Aqueous Waste Samples

5.7. Analysis Plan for Soil/Sediment/Waste Samples

APPENDIX 5.1

EQUIPMENT AND SUPPLIES CHECKLIST

_____ Narrow-mouth amber glass bottles with Teflon-lined caps (0.5, 1, and 2 liters)

_____ Amber glass vials with Teflon septa (40-ml)

_____ Blue Ice or equivalent

_____ 250-ml sterile bottle

_____ Cardboard boxes

_____ Insulated coolers

_____ Ballpoint pen (permanent black ink)

_____ Felt-tip marker pen (permanent black ink)

_____ Heavy-duty poly bags and ties

_____ Strapping tape

_____ Wide-mouth polyethylene bottles (0.5, 1, and 2 liters)

_____ Plastic trashcan liners

_____ 1-11 pH indicator paper

_____ Canvas bags

_____ Hach field test kit for sulfides

_____ Hach field test kit for chlorine

_____ Parafilm

_____ Ascorbic acid crystals

_____ Disposable surgical gloves (latex, PVC, other suitable plastic, or rubber)

_____ NaOH pellets

_____ Disposable wipes

_____ Crystalline $Na_2S_2O_3$

_____ Methanol and deionized water in Teflon wash bottles

APPENDIX 5.1, Continued

EQUIPMENT AND SUPPLIES CHECKLIST

_____ Padding for packaging of samples

_____ Concentrated HNO_3, H_2SO_4, and HCl

_____ New or cleaned polyethylene narrow-mouth bottles (1.0 liter, 500 ml, 125 ml, and 60 ml)

APPENDIX 5.2

RECOMMENDATION FOR SAMPLING AND PRESERVATION OF WATER SAMPLES ACCORDING TO MEASUREMENT[1]

Measurement	Volume Requirement (m liter)	Container[2]	Preservative[3,4]	Holding Time[5]
Physical Properties				
Color	50	P,G	Ice	48 Hrs.
Conductance	100	P,G	Ice	28 Days
Hardness	100	P,G	HNO_3 to pH<2	6 Mos.
Odor	200	G only	Ice	24 Hrs.
pH	25	P,G	None Required	Analyze Immediately
Residue				
Filterable	100	P,G	Ice	7 Days
Nonfilterable	100	P,G	Ice	7 Days
Total	100	P,G	Ice	7 Days
Volatile	100	P,G	Ice	7 Days
Settleable Matter	1000	P,G	Ice	48 Hrs.
Temperature	1000	P,G	None Required	Analyze Immediately
Turbidity	100	P,G	Ice	48 Hrs.
Metals				
Dissolved	200	P,G	Filter onsite HNO_3 to pH<2	6 Mos. 6 Mos.[8]
Suspended	200	P,G	Filter onsite	6 Mos.
Total	100	P,G	HNO_3 to pH<2	6 Mos.
Chromium^{+6}	200	P,G	Ice	24 Hrs.

APPENDIX 5.2, Continued

RECOMMENDATION FOR SAMPLING AND PRESERVATION OF WATER SAMPLES ACCORDING TO MEASUREMENT[1]

Measurement	Volume Requirement (m liter)	Container[2]	Preservative[3,4]	Holding Time[5]
Mercury				
Dissolved	100	P,G	Filter HNO_3 to pH<2	28 Days
Total	100	P,G	HNO_3 to pH<2	28 Days
Inorganics, Nonmetallics				
Acidity	100	P,G	Ice	14 Days
Alkalinity	100	P,G	Ice	14 Days
Bromide	100	P,G	None Required	28 Days
Chloride	50	P,G	None Required	28 Days
Chlorine	200	P,G	None Required	Analyse Immediately
Cyanides	500	P,G	None Required	28 Days
Fluoride	300	P,G	Ice	28 Days
Iodide	100	P,G	Ice	24 Hrs.
Nitrogen				
Ammonia	400	P,G	Ice H_2SO_4 to pH<2	28 Days
Kjeldahl, Total	500	P,G	Ice H_2SO_4 to pH<2	28 Days
Nitrate Plus Nitrite	100	P,G	Ice H_2SO_4 to pH<2	28 Days
Nitrate[9]	100	P,G	Ice	48 Hrs.
Nitrite	50	P,G	Ice	48 Hrs.

RECOMMENDATION FOR SAMPLING AND PRESERVATION OF WATER SAMPLES ACCORDING TO MEASUREMENT[1]

Measurement	Volume Requirement (m liter)	Container[2]	Preservative[3,4]	Holding Time[5]
Dissolved Oxygen				
Probe	300	G bottle and top	None Required	Analyze Immediately
Winkler	300	G bottle and top and store in dark	Fix onsite	8 Hours
Phosphorus				
Orthophosphate, Dissolved	50	P,G	Filter onsite Ice	48 Hrs.
Hydrolysable	50	P,G	Ice H_2SO_4 to pH<2	28 Days
Total, Dissolved	50	P,G	Filter on site Ice H_2SO_4 to pH<2	24 Hrs.
Silicia	50	P only	Ice	28 Days
Sulfate	50	P,G	Ice	28 Days
Sulfide	50	P,G	Ice add 2 m liter sinc acetate plus NaOH to pH >9	7 Days
Sulfite	50	P,G	None Required	Analyze Immediately
Organics				
BOD	1000	P,G	Ice	48 Hrs.
COD	50	P,G	Ice H_2SO_4 to pH<2	28 Days
Oil & Grease	1000	P,G	Ice H_2SO_4 to pH<2	28 Days

APPENDIX 5.2, Continued

RECOMMENDATION FOR SAMPLING AND PRESERVATION OF WATER SAMPLES ACCORDING TO MEASUREMENT[1]

Measurement	Volume Requirement (m liter)	Container[2]	Preservative[3,4]	Holding Time[5]
Organic Carbon	25	P,G	Ice H_2SO_4 or HCl to pH<2	28 Days
Phenolics	500	G only	Ice H_2SO_4 to pH<2	28 Days
Cyanide	1000	P,G	Ice 40% NaOH to pH>12, 0.6 g Ascorbic Acid	14 Days
Coliform, Fecal and Total	250 m liter	P,G	Ice Sterile	6 Hrs.
Oil and Grease	1000 m liter	G	Ice H_2SO_4 to pH<2	28 Days
Organic Carbon	25 m liter	P,G	Ice H_2SO_4 to pH<2	28 Days
Phenols	1000 m liter	G, Teflon-lined Cap	Ice	7 Days until extraction; 40 Days after extraction
Total Organic Halogen and Purgeable aromatics	40 m liter	G, Teflon-lined vial septum	Ice 0.008% $Na_2S_2O_3$[6]	14 Days
Purgeable aromatics	40 m liter vial	G, Teflon-lined septum	Ice 0.008% $Na_2S_2O_3$[6]	14 Days
Acrolein and acrylonitrile	1000 m liter	G, Teflon-lined septum	Ice 0.008% $Na_2S_2O_3$[6]	14 Days
Phenols	1000 m liter	G, Teflon-lined cap	Ice 0.008% $Na_2S_2O_3$[6]	7 days until extraction; 40 days after extraction

APPENDIX 5.2, Continued

RECOMMENDATION FOR SAMPLING AND PRESERVATION OF WATER SAMPLES ACCORDING TO MEASUREMENT[1]

Measurement	Volume Requirement (m liter)	Container[2]	Preservative[3,4]	Holding Time[5]
Benzindines	1000 m liter	G, Teflon-lined cap	Ice 0.008% $Na_2S_2O_3$[6]	7 Days until extraction; 40 days after extraction
Phthalate esters	1000 m liter	G, Teflon-lined cap	Ice 0.008% $Na_2S_2O_3$[6]	7 Days until extraction; 40 days after extraction
Nitrosamines	1000 m liter	G, Teflon-lined cap	Ice store in dark 0.008% $Na_2S_2O_3$[6] extraction	7 Days until extraction; 40 days after
Nitroaromatics and isophorone	1000 m liter	G, Teflon-lined cap	Ice	7 days until extraction; 40 days after extraction
Polynuclear aromatic hydrocarbons	1000 m liter	G, Teflon-lined cap	Ice	7 days until extraction; 40 days after extraction
Haloethers	1000 m liter	G, Teflon-lined cap	Ice	7 days until extraction; 40 days after extraction
Chlorinated	1000 m liter	G, Teflon-lined cap	Ice	7 days until extraction; 40 days after extraction
TCDD	1000 m liter	G, Teflon-lined cap	Ice	7 days until extraction; 40 days after extraction

RECOMMENDATION FOR SAMPLING AND PRESERVATION OF WATER SAMPLES ACCORDING TO MEASUREMENT[1]

Measurement	Volume Requirement (m liter)	Container[2]	Preservative[3,4]	Holding Time[5]
Pesticides Tests				
Pesticides	1000 m liter	G, Teflon-lined cap	Ice	7 days until extraction; 40 days after extraction
Radiological Tests				
Alpha, beta and radium	1000 m liter	P,G	HNO_3 to pH<2	6 mos.
Tritium	25 m liter	G	None	No limit
Isotopic Uranium	500 m liter	P	HNO_3 to pH<2	6 mos.
Sr-90	1000 m liter	P	HNO_3 to pH<2	6 mos.

[1]More specific instructions for preservation and sampling are found with each procedure described in this manual. A general discussion about sampling water and industrial wastewater may be found as ASTM, Part 31, p. 72-82 (1976) Method D-3370.

[2]Plastic (P) or Glass (G). For metals, polyethylene with a polypropylene cap (no liner) is preferred.

[3]Sample preservation should be performed immediately upon sample collection. For composite samples, each aliquot should be preserved at the time of collection. When use of an automated sample makes it impossible to preserve each aliquot, then samples may be preserved by keeping cool at 4°C until compositing and sample splitting is completed.

[4]When any sample is to be shipped by common carrier or sent through the United States mails, it must comply with the Department of Transportation Hazardous Materials Regulations (49 CFR Part 172). The person offering material for transportation is responsible for ensuring compliance. For the preservation requirements of Table 1, the Office of Hazardous Materials, Materials Transportation Bureau, Department of Transportation has determined that the Hazardous Materials Regulations do not apply to the following material: Hydrochloric acid (HCL) in water solutions at concentrations of 0.080% by weight or less, pH about 12.30 or less.

[5]Samples should be analyzed as soon as possible after collection. The times listed are the maximum times that samples may be held before analysis and still considered valid. Samples may be held for longer periods only if the permittee, or monitoring laboratory, has data on file to show that the specific types of samples under study are stable for the longer time and has received a variance from the regional administrator. Some samples may not be stable for a shorter time, if knowledge exists to show it is necessary to maintain sample stability.

[6]Should only be used in the presence of residual chlorine.

[7]Maximum holding time is 24 hours when sulfide is present. Optionally, all samples may be tested with lead acetate paper before the pH adjustment in order to determine if sulfide is present. If sulfide is present, it can be removed by

RECOMMENDATION FOR SAMPLING AND PRESERVATION OF WATER SAMPLES ACCORDING TO MEASUREMENT[1]

the addition of cadmium nitrate powder until a negative spot test is obtained. The sample is filtered and then NaOH is added to pH 12.

[8]Samples should be filtered immediately onsite before adding preservative for dissolved metals.

[9]For samples from nonchlorinated drinking water supplies, concentrated H_2SO_4 should be added to lower sample pH to less than 2. The sample should be analysed within 14 days.

APPENDIX 5.3

SAMPLING AND PRESERVATION PROCEDURES FOR RCRA GROUNDWATER DETECTION MONITORING[a]

Parameter	Recommended Container[b]	Preservative	Maximum Holding Time	Minimum Volume Required for Analysis
		Indicators of Groundwater Contamination[c]		
pH	T,P,G	Field determined	None	25 m liter
Specific conductance	T,P,G	Field determine	None	100 m liter
TOC	G, amber, T-lined cap[e]	Ice	28 days HCl to pH<2	4 x 15 m liter
TOX	G, amber, T-lined septa or caps	Ice, add 1.1M sodium sulfite	7 days	4 x 15 m liter
		Groundwater Quality Characteristics		
Chloride	T, P, G	Ice	28 days	50 m liter
Iron Manganese Sodium	T, P	Field acidified to pH <2 with HNO_3	6 months	200 m liter
Phenols	G	Ice/H_2SO_4 to pH <2	28 days	500 m liter
Sulfate	T, P, G	Ice	28 days	50 m liter
		EPA Interim Drinking Water Characteristics		
Arsenic Barium Cadmium Chromium Lead Mercury Selenium Silver	T, P Dark Bottle	**Total Metals** Field acidified to pH <2 with HNO_3 **Dissolved Metals** 1. Field filtration (0.45 micron) 2. Acidify to pH <2 with HNO_3	6 months 6 months	1000 m liter 1000 m liter

APPENDIX 5.3, Continued

SAMPLING AND PRESERVATION PROCEDURES FOR RCRA GROUNDWATER DETECTION MONITORING[a]

Parameter	Recommended Container[b]	Preservative	Maximum Holding Time	Minimum Volume Required for Analysis
Fluoride	T, P	Ice	28 days	300 m liter
Nitrate/ Nitrite	T, P, G	Ice/H_2SO_4 to pH <2	14 days	1000 m liter
Endrin Lindane Methoxychlor Toxaphene 2,4 D 2,4,5 TP Silvex	T, G	Ice	7 days	2000 m liter
Radium Gross Alpha Gross Beta	P, G	Field acidified to pH <2 with HNO_3	6 months	1 gallon
Coliform bacteria	PP, G (sterilized)	Ice	6 hours	200 m liter
		Other Groundwater Characteristics of Interest		
Cyanide	P, G	Ice, NaOH to pH >12. 0.6 g ascorbic acid[f]	14 days[g]	500 m liter
Oil and Grease	G only	Ice H_2SO_4 to pH <2	28 days	100 m liter
Semivolatile, nonvolatile organics	T, G	Ice	14 days	60 m liter
Volatiles	G, T-lined	Ice	14 days	60 m liter

[a]References:

Test Methods for Evaluation Solid Waste - Physical/Chemical Methods, SW-846 (2nd edition, 1982).
Methods for Chemical Analysis of Water and Wastes, EPA-600/4-79-020.
Standard Methods for the Examination of Water and Wastewater, 16th edition (1985).

SAMPLING AND PRESERVATION PROCEDURES FOR RCRA GROUNDWATER DETECTION MONITORING[a]

[b]Container Types:

P = Plastic (polyethylene)
G = Glass
T = Fluorocarbon resins (PTFE, Teflon, FEP and PFA)
PP = Polypropylene

[c]Based on the requirements for detection monitoring (265.93), the owner/operator must collect a sufficient volume of groundwater to allow for the analysis of four separate replicates.

[d]Shipping containers (cooling chest with ice or ice pack) should be certified as to the 4°C temperature at the time of sample placement into these containers. Preservation of samples requires that the temperature of collected samples be adjusted to 4°C and maintained at 4°C upon placement of sample and during shipment. Field personnel will check the temperature in the container at the time of shipping and ice the samples to maintain a cool temperature during shipment. Maximum-minimum thermometers can be placed into the shipping chest to record temperature history. Chain-of-custody forms will include the temperature in the container at the time of shipment and delivery at the laboratory in addition to in-transit (maximum) temperature, if available.

[e]Do not allow any headspace in the container.

[f]Use ascorbic acid only in the presence of oxidising agents.

[g]Maximum holding time is 24 hours when sulfide is present. Optionally, all samples may be tested with lead acetate paper before the pH adjustment in order to determine if sulfide is present. If sulfide is present, it can be removed by addition of cadmium nitrate powder until a negative spot test is obtained. The sample is filtered and then NaOH is added to pH 12.

APPENDIX 5.4

ANALYSIS PLAN FOR SOIL/SEDIMENT SAMPLES

Analyte	Method	Sample Container	Sample Volume (g)	Holding Preservations	Time (days)
Volatile Organics	Ref. 2	40-ml vial (2) w/Teflon-lined silicon rubber septum	5	Ice	14
Base/Neutral/Acid Extractable Organics	Ref. 3	Amber G, 1 L	10-30	Ice	7/40[2]
Organochlorine Pesticide/PCB	Ref. 4	Amber G, 1 L	10-30	Ice	7/40[2]
HSL Inorganic[1]	Ref. 5	P, G, 1 L	200	Ice	180
Non-HSL Metals	SW-846	P, G, 1 L	200	Ice	180
Reactivity	Ref. 6	Amber G	---	Ice	N/A
Chloride	EPA 300.0[3]	G, 1 L	20	Ice	N/A
Sulfate	EPA 300.0[3]	G, 1 L	20	Ice	N/A
Nitrate	EPA 300.0[3]	G, 1 L	20	Ice	N/A
Cyanide	Ref. 1	G, 1 L	200	Ice	14
Hexavalent Chromium	S.M. 312b[4]	G, 1 L	100	Ice	1

---

[1]Includes cesium, molybdenum, and strontium, which are non-HSL metals, but are analysed using the same methods.

[2]Extract within 7 days; analysis within 40 days of extraction.

[3]Soil/sediments will be leached with Laboratory Reagent Water (20 g soil to 50 ml water) and water extract analyzed using procedure in "Methods for Chemical Analysis of Water and Wastes," 1983; EPA 600/4-79-020.

[4]Soil/sediment will be leached with Laboratory Reagent Water (5 g soil and 100 ml of water) by shaking for 2 hours, and the water extract filtered and subsequently analysed. This is in accordance with method 312B in Standard Methods for Examination of Water and Wastewater, 16th Edition.

*The RIP Sampling Plans will define the actual suite of parameters to be analysed for specific samples.

APPENDIX 5.4, Continued

ANALYSIS PLAN FOR SOIL/SEDIMENT SAMPLES

Method References

Ref. 1. Method 9010 - "Test Methods for Evaluating Solid Wastes," Office of Solid Waste and Emergency Response, Washington, DC 20460, Revised September 1986.

Ref. 2. Method 8240 - "Test Methods for Evaluating Solid Wastes," Office of Solid Waste and Emergency Response, Washington, DC 20460, Revised September 1986.

Ref. 3. Method 8270 - "Test Methods for Evaluating Solid Wastes," Office of Solid Waste and Emergency Response, Washington DC 20460, Revised September 1986.

Ref. 4. Method 8080 - "Test Methods for Evaluating Solid Wastes," Office of Solid Waste and Emergency Response, Washington, DC 20460, Revised September 1986.

Ref. 5. Method 6010 or 7000 Series Methods - "Test Methods for Evaluating Solid Wastes," Office of Solid Waste and Emergency Response, Washington, DC 20460, Revised September 1986.

Ref. 6. Method 9010, 9030 - "Test Methods for Evaluating Solid Wastes," Office of Solid Waste and Emergency Response, Washington, DC 20460, Revised September 1986.

Ref. 7. Method 1310 - "Test Methods for Evaluating Solid Wastes," Office of Solid Waste and Emergency Response, Washington, DC 20460, Revised September 1986.

APPENDIX 5.5

SAMPLE CONTAINERS FOR WASTE

Waste Type	Recommended Container	Closure	Analysis
Photosensitive wastes 1000 or 2000 m liter	Amber HDPE or amber glass caps with Teflon liners for glass bottles	LPE caps for HDPE bottles; Bakelite	Waste characterisation per 40 CFR-Part 261
Pesticide hydrocarbon chlorinated hydrocarbons petroleum distillates	Wide-mouth borosilicate glass bottles 1000 or 2000 m liter	Bakelite caps with Teflon liner	Waste characterisation per 40 CFR-Part 261
Oil wastes	HDPE bottles wide mouth 1000 or 2000 m liter	LPE caps	Waste characterisation per 40 CFR-Part 261
Strong alkali or hydrofluoric acid	HDPE bottles, 1000 m liter	LPE caps wide mouth	Waste characterisation per 40 CFR-Part 261
Aqueous wastes--characterisation of organics	Borosilicate glass bottles 1000 or 2000 m liter	Caps with Teflon liner	Waste characterisation per 40 CFR-Part 261
Solids (sludge, soils, and granular)	8-oz, wide-mouth glass bottle	Bakelite caps with Teflon liners	Waste characterisation per 40 CFR-Part 261

APPENDIX 5.6

CONTAINERS FOR AQUEOUS WASTE SAMPLES

Analyte	Sample Container	Sample Volume	Preservation[7]	Holding Time(days)
HSL Volatile	40 m liter vial (2)	40 m liter	Ice	14
HSL Base/Neutral/Acid[1]	Amber G, 1L	1 L	Ice	7/40[5]
HSL Pesticide/PCB	Amber G, 1L	1 L	Ice	7/40
HSL Inorganic[2]	P,G, 1L	1 L	pH<2,w/HNO_3[9]	180
Non-HSL Metals	P,G, 1L	1 L	pH<2,w/HNO_3[9]	180
Cyanide	P,G, 1L	0.5L	pH>11,w/NaOH	14
pH[3]	P,G	N/A	None	Field Meas.
Sp. Conductivity	P,G	N/A	None	Field Meas.
Temperature[3]	P,G	N/A	None	Field Meas.
Diss. Oxygen	G	N/A	None	Field Meas.
TDS	P,G 1L	0.1 L	Ice	7
TSS	P,G 1L	0.1 L	Ice	7
Total Phosphate	P,G, 1L	1L	Ice, pH<2[9]	28
Chloride, Sulfate	P,G, 1L	1 L	Ice	28
Carbonate/Bicarbonate[4]	P,G, 1L	1 L	Ice	14
Nitrate	P,G, 1L	1L	Ice	2
Hexavalent Chromium	P,G, 1L	1 L	Ice	2

---

[1]The HSl Base/Neutral/Acid fractions analytical parameters are the HSL semivolatiles.
[2]Includes Cesium, Molybdenum, and Strontium, which are non-HSL metals, but are analysed using the same methods.
[3]Field Measurements.
[4]These are reported as carbonate and biocarbonate alkalinity.
[5]Seven day to extraction; analysis within 40 days of extraction.
[6]All samples with the exception of those for total metals will be filtered within 4 hours of sample collection and preservatives added to the filtrate as specified.
[7]All samples will be kept at 4°C after arrival at the laboratory.
[*]The RIP Sampling Plans will define the actual suite of parameters to be analysed for specific samples.

APPENDIX 5.7

ANALYSIS PLAN FOR SOIL/SEDIMENT/WASTE SAMPLES*

Analyte	Sample Container	Sample Volume(g)	Preservations	Holding Time(days)
HSL Volatile	40 m liter vial (2)	5	Ice	14
HSL Base/Neutral/Acid[1]	Amber G, 1 L	10-30	Ice	7/40[3]
HSL Pesticide/PCB	Amber G, 1 L	10-30	Ice	7/40[3]
HSL Inorganic[2]	P,G, 1 L	200	Ice	180
Non-HSL Metals	P,G, 1L	200	Ice	180
Reactivity	Amber G	100	Ice	N/A
EP Toxicity	Amber G	100	Ice	N/A
Chloride	G, 1 L[4]	20	Ice	N/A
Sulfate	G, 1 L[4]	20	Ice	N/A
Nitrate	G, 1 L[4]	20	Ice	N/A
Cyanide	G, 1 L	200	Ice	14
Hexavalent Chromium	G, 1 L[5]	200	Ice	1

---

[1]The HSI Base/Neutral/Acid fractions analytical parameters are the HSL semivolatiles.

[2]Includes Cesium, Molybdenum, and Strontium, which are non-HSL metals.

[3]Extract within 7 days; analysis within 40 days of extraction.

[4]Soil/sediments will be leached with laboratory reagent water (20 g soil to 50 m liter water) and water extract analysed using referenced procedure. Procedure reference: Methods for Chemical Analysis of Water and Wastes, 1983; EPA 600/4-79-020.

[5]Soil/sediment will be leached with laboratory reagent water (5 g soil and 100 m liter of water) by shaking for 2 hours. The water extract is filtered and subsequently analysed. This is in accordance with method 312B in Standard Methods for Examination of Water and Wastewater, 15th Edition.

*The RIP Sampling Plans will define the actual suite of parameters to be analysed for specific samples.

APPENDIX 5.7, Continued

ANALYSIS PLAN FOR SOIL/SEDIMENT/WASTE SAMPLES

Method References

Ref. 1. Method 9010 - "Test Methods for Evaluating Solid Wastes," Office of Solid Waste and Emergency Response, Washington, DC 20460, Revised September 1986.

Ref. 2. Method 8240 - "Test Methods for Evaluating Solid Wastes," Office of Solid Waste and Emergency Response, Washington, DC 20460, Revised September 1986.

Ref. 3. Method 8270 - "Test Methods for Evaluating Solid Wastes," Office of Solid Waste and Emergency Response, Washington, DC 20460, Revised September 1986.

Ref. 4. Method 8080 - "Test Methods for Evaluating Solid Wastes," Office of Solid Waste and Emergency Response, Washington, DC 20460, Revised September 1986.

Ref. 5. Method 6010 or 7000 Series Methods - "Test Methods for Evaluating Solid Wastes," Office of Solid Waste and Emergency Response, Washington, DC 20460, Revised September 1986.

Ref. 6. Method 9010 or 9030 Series Methods - "Test Methods for Evaluating Solid Wastes," Office of Solid Waste and Emergency Response, Washington, DC 20460, Revised September 1986.

Ref. 7. Method 1310 - "Test Methods for Evaluating Solid Wastes," Office of Solid Waste and Emergency Response, Washington, DC 20460, Revised September 1986.

STANDARD OPERATING PROCEDURE 1.5

GUIDE TO THE HANDLING, PACKAGING, AND SHIPPING OF SAMPLES

1. PURPOSE

To provide a general guide for packaging and shipping samples of environmental and hazardous materials to the laboratory. In addition, instructions are provided to select the correct category for packaging and shipping samples of unknown contents.

2. DISCUSSION

The Remedial Investigation Plan (RIP) provides information concerning the scope and details of a specific operation. Refer to the RIP for the type of samples to be collected and the destination for the samples. This SOP describes the procedures used by the ER Program technical assistance subcontractor when handling, packaging, and shipping samples. Other procedures or requirements used by installation subcontractors must conform to this SOP. The transportation of samples must protect the integrity of the sample and prevent any detrimental effects from the potentially hazardous nature of the samples.

Samples collected at a site are classified as environmental or hazardous material samples. In general, environmental samples are collected from streams, farm ponds, small lakes, wells, and offsite soils that are not expected to be contaminated with hazardous materials. Samples of onsite soils or water and materials collected from drums, bulk storage tanks, obviously contaminated ponds, impoundments, lagoons, pools, and leachates from hazardous waste sites are considered samples of hazardous materials. A distinction must be made between the two types of samples for two reasons.

1. The appropriate Department of Transportation (DOT) or International Air Transport Association (IATA) procedures for the transportation of samples must be determined. If there is any doubt, a sample should be considered hazardous and shipped accordingly.

2. The health and safety of laboratory personnel receiving samples must be protected. Special precautions are used at laboratories when samples that are not environmental are received.

Hazardous materials defined by the transportation regulations contained in 49 CFR (Subchapter C, Part 171) or the current edition of IATA regulations for dangerous goods (Sections 3 and 4) should be shipped only by the method of transportation specified in these regulations. Overnight shipments by air (Federal Express, for example) are governed by the IATA regulations. Transportation of hazardous materials exclusively by surface route is governed by the requirements of 49 CFR. This operating practice ensures compliance with the appropriate regulations and at times requires the implementation of packaging instructions that are more conservative and stringent than those required by regulation. Employees should be aware that regulatory bodies with jurisdiction have the authority to levy substantial fines and penalties to violators. Failure on the part of any employee to follow the requirements of these procedures is cause for disciplinary action, including discharge.

This SOP provides general guidance for packaging, marking, labeling, and shipping samples of environmental and hazardous materials and should not be misconstrued as the equivalent of or replacement for the DOT or IATA regulations. When shipping any potentially hazardous samples, the DOT regulations (49 CFR 171-178) and IATA regulations must be followed. This SOP should be used in conjunction with DOT and IATA regulations and advice from the freight carrier to ensure that all regulations governing transportation are being followed.

Any questions about the instructions for shipping environmental samples or hazardous materials in this SOP should be directed to the subcontractor's health and safety officer, who provides technical assistance to the ER Program.

3. PROCEDURES

3.1. Associated Procedures

Before every operation, SOPs 1.1-1.10 must be reviewed. These SOPs contain information on the performance of field activities. They should be consulted for specific information on equipment and supplies; sample collection, preservation, packaging, and shipping; decontamination procedures; and documentation requirements. Procedures directly associated with this SOP are listed below.

SOP No.	SOP Title
1.1	General Instructions for Field Personnel
1.3	Sample Control and Documentation
1.4	Sample Containers and Preservation
1.6	General Equipment Decontamination

3.2. Preparation

3.2.1. Office

A. Review the RIP and SOPs listed in Section 3.1.

B. Coordinate schedules/actions with the installation staff.

C. Obtain appropriate permission for property access.

D. Notify the analytical laboratory of sample types, the number of samples, and the approximate arrival date.

E. Contact the carrier that will transport samples to obtain information on regulations and specifications.

3.2.2. Documentation

A. Obtain a logbook from the QA officer.

B. Obtain a sufficient number of the appropriate ER Program data collection forms (see INDEX TO SOPs).

C. Consult the ER Program data administrator for a current list of information management codes, location IDs, and sample numbers used in the completion of data forms.

3.3. Operation

Procedures for shipping samples under DOT and IATA regulations are provided in Appendixes 5.1 through 5.4. The following step-by-step procedure will ensure that all applicable requirements for classifying, packing, marking, labeling, and documenting samples can be met.

A. Determine the correct technical name or composition of substances that might be in the samples. Check to see if the substance is forbidden on aircraft. Section 1 of the IATA regulations for dangerous goods contains a list of the substances that cannot be transported by air.

B. All samples must be transported by cargo aircraft or land transport. See Appendixes 5.1 through 5.4 for the appropriate DOT and IATA requirements.

C. Consult the DOT or IATA references to select the appropriate shipping container and packing material.

D. Prepare the consignment according to relevant requirements.

E. Ensure that all appropriate markings are printed on the packages and labels are attached.

F. Make any appropriate advance arrangements with the carrier and obtain current information about regulations and specifications that might affect the shipment.

G. Prepare the cargo airbill, complete, and sign the appropriate declarations for transporting dangerous goods.

H. Deliver the shipment to the local office of the freight carrier or arrange for a pickup at the site. Do not seal the container until the freight carrier is satisfied that the internal packaging meets all applicable regulations.

I. Ensure that all chain-of-custody procedures are observed. The copy of the bill of lading form will be retained as evidence of the chain-of-custody transfer.

3.4. Postoperation

3.4.1. Field

A. When transferring the samples, have the transferee sign and record the date and time on the Custody Transfer Record/Lab Work Request form (see SOP 1.3, Sample Control and Documentation). Custody transfers made to a sample custodian in the field should account for each sample, although samples may be transferred as a group. Every person who takes custody should fill in the appropriate section of the Custody Transfer Record/Lab Work Request form. Minimize the time of possession.

B. The field custodian is responsible for properly packaging and dispatching samples to the appropriate laboratory. This responsibility includes completing, dating, and signing the appropriate portion of the Custody Transfer Record/Lab Work Request form. When samples of hazardous materials are shipped to a laboratory, provide advance notice.

C. Verify that all sample bottles have been correctly identified and labels include necessary information (for example, location, time, and date).

3.4.2. **Documentation**

A. Complete logbook entries, verify the accuracy of entries, and sign/initial all pages.

B. As in any other activity that may be used to support litigation, regulatory agencies must be able to provide the chain of possession and custody of any samples that are offered for evidence or that form the basis of analytical test results introduced as evidence. Written procedures must be available and followed whenever samples for evidence are collected, transferred, stored, analyzed, or destroyed. The primary objective of these procedures is to create an accurate, written record that can be used to trace the possession and handling of the sample from the moment of its collection through analysis and the introduction as evidence.

A sample is in someone's custody under any of the conditions listed below.

- It is in one's actual possession.
- It is in one's view (after being in one's physical possession).
- It is one's physical possession and then locked up so that no one can tamper with it.
- It is kept in a secured area that is restricted to only authorized personnel.

C. Send all packages to the laboratory with the Custody Transfer Record/Lab Work Request form and other pertinent forms. Retain a copy of these forms at the originating office (either carbon or photocopy). Register mailed packages with a return receipt requested. For packages sent by common carrier, retain receipts as part of the permanent chain-of-custody documentation. Pack samples to eliminate the possibility of breakage during shipment. Seal or lock the package so that any tampering can be readily detected.

D. Additional guidelines for chain of custody, a sample of the form, and instructions for completing the Custody Transfer Record/Lab Work Request form are included in SOP 1.3, Sample Control and Documentation.

3.4.3. **Office**

A. Deliver original forms and logbooks to the site manager for technical review. He/she will review, sign forms, and transmit to the document control officer (copies to the files) for eventual delivery to the Department of Energy.

B. Contact the analytical laboratory to ensure that samples arrived safely and instructions for sample analyses are clearly understood.

4. SOURCES

International Air Transport Association. 1988. Dangerous Goods Regulations. January 1988. Montreal, Quebec, Canada.

CFR 49. 1985. Code of Federal Regulations, Title 49, U.S. Department of Transporatation, Parts 100-199. November 1, 1985. Washington, D.C.: U.S. Government Printing Office.

5. APPENDIXES

5.1 Environmental Samples

5.2 Samples of Hazardous Materials

5.3 Transportation of Unknown Hazardous Materials by 49 CFR

5.4 Transportation of Unknown Hazardous Materials by IATA

APPENDIX 5.1

ENVIRONMENTAL SAMPLES

A. Environmental Samples

Environmental samples may be packaged and shipped according to the following procedures.

B. Packaging

Environmental samples must be packaged according to the following procedures.

1. Place sample container, properly identified with a sealed lid, into a polyethylene bag and seal the bag.

2. Place sample in a fiberboard container approved by the Department of Transportation (DOT) or picnic cooler that has been lined with a large polyethylene bag.

3. Pack container with enough noncombustible, absorbent cushioning material to minimize the possibility of breakage and absorb any materials that may have leaked from the sample jars. Vermiculite is recommended.

4. If there are multiple samples, be sure there is sufficient cushioning material between the sample containers (each in its individual polyethylene bag) to prevent breakage from dropping or severe shock.

5. Seal large bag and add any needed absorbent.

6. Seal outside container with duct tape or strapping tape.

Before any samples are placed in their final shipping containers, the exterior of the sample containers should be wiped clean with a detergent solution.

C. Marking/Labeling

Sample containers must have a completed sample identification tag (see SOP 1.3, Sample Control and Documentation), and the outside container must be marked Environmental Sample. The appropriate side of the container must be marked This End Up, and arrow labels should be used accordingly. No DOT placards or labeling are required. Assure that all sample containers are labeled identically to labels on the shipping container.

D. Shipping Papers

No DOT or International Air Transport Association (IATA) shipping papers are required.

ENVIRONMENTAL SAMPLES

E. Transportation

There are no DOT or IATA restrictions on the mode of transportation. An overnight carrier is recommended.

APPENDIX 5.2

SAMPLES OF HAZARDOUS MATERIALS

A. Samples of Hazardous Material

Samples that are not environmental samples or samples known or expected to contain hazardous substances must be considered samples of hazardous material and transported according to the following requirements.

If the hazardous material in the sample is known or can be accurately identified, it is packaged, marked, labeled, and shipped according to the specific instructions for that material described in the Department of Transportation Hazardous Materials Table (49 CFR 72.101) or the latest edition of the International Air Transport Association Dangerous Goods Regulations.

APPENDIX 5.3

TRANSPORTATION OF UNKNOWN HAZARDOUS MATERIALS BY 49 CFR

A. Transportation of Unknown Hazardous Materials by 49 CFR

1. For samples of hazardous substances of unknown content that will be shipped by surface carrier under 49 CFR Transportation Regulations, the appropriate transportation category is selected through a process of elimination using the Department of Transportation (DOT) Hazardous Materials Classification system. While it is probable that most unknown samples of hazardous material shipped by field personnel will not contain radioactive materials or Poison A materials, it is essential for the following gradient hierarchy to be considered.

2. If radiation survey instruments demonstrate (or reasonable probability exists) that the unknown hazardous sample is radioactive, the appropriate DOT shipping regulations for radioactive material must be followed. Contact the subcontractor's health and safety officer for ER Program technical assistance for specific details.

3. If radioactive material is eliminated, the sample must then be considered to contain Poison A materials. DOT defines Poison A as an extremely dangerous, poisonous gas or a gas or liquid of the nature that a very small amount of gas (or vapor of the liquid) will be dangerous to life. Most Poison A materials are gases and would not be found in glass or drum-like containers. All samples taken from closed containers do not have to be shipped as Poison As. Based upon information available, judgment must be made as to whether a sample from a closed container is a Poison A. For specific instructions on the proper procedures for shipping Poison A, contact the subcontractor's health and safety officer for ER Program technical assistance.

4. If Poison A is eliminated as a shipment category, the next two classifications are flammable or nonflammable gases. Because an open container is not expected to contain a significant amount of gas, flammable liquid would be the next applicable category. After the categories of radioactive material, Poison A flammable gas, and nonflammable gas have been eliminated, the sample can be classified as a flammable liquid and shipped accordingly.

5. These procedures would also suffice for shipping any other samples classified below Poison A in the DOT classification table.

6. These procedures would also suffice for shipping any other samples classified below flammable liquids in the DOT classification table.

B. Shipment of Flammable Liquid by 49 CFR

The following instructions apply to the shipment of a flammable liquid by rail car, truck, or other common carrier.

1. Collect the sample in a glass or polyethylene container with a metallic, Teflon-lined screw cap. The container may be no larger than 16 fluid oz. To prevent leakage, fill the container no more than 90% full. Mark the fluid level on the outside of the sample container. If an air space in the sample container would affect sample integrity (for example, the case of a volatile organics analysis vial), place that container within a second container to meet the 90% requirement. Before any samples are placed in the final shipping container, the exterior should be wiped clean with a detergent solution.

2. Complete the sample identification tag (see SOP 1.3, Sample Control and Documentation) and attach it securely to the sample container. The sample identification tag should contain information needed to trace the sample to its point of origin and sample taker, as well as any quality assurance/quality control information.

3. Seal the container and place it in a 2-ml-thick (or thicker) polyethylene bag with one sample in each bag. Position the identification tag so that it can be read through the bag. Seal the bag.

4. Place the sealed bag inside a metal can and cushion it with enough noncombustible, absorbent material (for example, vermiculite) between the bottom and sides of the can and bag to prevent breakage and absorb leakage. Pack one bag per can. Use clips, tape, or other positive means to secure the lid onto the can.

5. Place one or more metal cans into a strong outside container (like a picnic cooler or a DOT-approved fiberboard box). Surround cans with noncombustible, absorbent cushioning material for stability during transport. Total sample volume in the picnic cooler or fiberboard box should not exceed 10 gallons. A separate air bill and shipping declaration must be processed for each container or combination of containers so that the total sample volume on any air bill will not exceed 10 gallons.

C. Shipment by Land

The following instructions apply for shipment of samples of hazardous material by car or truck (not by common carrier).

1. The above instructions for flammable liquids will apply.

2. Additionally, sample containers must be firmly secured so that they will not bounce against the sides of the vehicle during transit or in an accident.

3. Limit shipments to 1000 lbs or less. Under 1000 lbs, there are no placarding requirements under 49 CFR 172.504 (c) (1).

D. Chain of Custody

Include the Custody Transfer Record/Lab Work Request form (properly executed) in the outside container. It is also recommended to use chain-of-custody tape over each can lid.

E. Marking and Labeling Samples Classified as Flammable Liquid

1. Use abbreviations only where specified.

2. Place the information listed below on each paint can.

   - Laboratory name and address

   - Flammable Liquid, N.O.S. UN 1993. The designation N.O.S. means not otherwise specified. Use an approved DOT label.

3. Information placed on cans should also be placed on at least one side of the outside shipping containers. If labelling is placed on more than one side, it must be attached to all visible sides.

F. Shipping Papers for Samples Classified as Flammable Liquid

Shipping papers must be provided for the shipment of all samples (including those transported by rental, government, company, or personal cars).

G. Bill of Lading/Certification Statement

Complete the bill of lading and sign the certification statement. If the carrier does not provide it, use a standard industry form. Provide the information listed below in the order listed. One form may be used for more than one outside container.

- Flammable Liquid, N.O.S. UN 1993

- Limited Quantity (or Ltd. Qty.)

- Net weight or net volume (weight or volume may be abbreviated) just before or after the UN or ID number.

- Further description (like Laboratory Samples) is allowed if it does not contradict required information.

H. Transportation

1. Transport samples of unknown hazardous material that are classified as flammable liquid by rented or common carrier truck or railroad, as appropriate.

2. Do not transport by any air transport system.

APPENDIX 5.4

TRANSPORTATION OF UNKNOWN HAZARDOUS MATERIAL BY IATA

A. Transportation of Unknown Hazardous Material by International Air Transport Association (IATA)

For samples containing unknown material that will be shipped by air carrier, the most appropriate classification in the IATA regulations is the classification of other regulated substances. In order to use this designation, the categories shown below must be eliminated.

- Radioactive Materials
- Poison A Materials
- Flammable Gases
- Nonflammable Gases

B. Shipment of Other Regulated Substances

The instructions below will apply for the shipment of other regulated substances by cargo-carrying aircraft, rail car, or other common carrier.

1. Collect the sample in a glass or polyethylene container with a nonmetallic, Teflon-lined screw cap. The container may be no larger than 16 fluid oz. To prevent leakage, fill the container no more than 90% full. If an air space in the sample container would affect sample integrity (for example, the case of a volatile organics analysis vial), place that container within a second container to meet the 90% requirement. Before any samples are placed in the final shipping container, the exterior should be wiped clean with detergent solution.

2. Complete the sample identification tag (see SOP 1.3, Sample Control and Documentation) and attach it securely to the sample container. The sample identification tag should contain information needed to trace the sample to its point of origin and sample taker, as well as any quality assurance/quality control information.

3. Seal the container and place it in a 2-ml-thick (or thicker) polyethylene bag with one sample in each bag. Position the identification tag so that it can be read through the bag. Seal the bag.

4. Place the sealed bag inside a metal can and cushion it with enough noncombustible, absorbent material (for example, vermiculite) between the bottom and sides of the can and bag to prevent breakage and absorb leakage. Pack one bag per can. Use clips, tape, or other positive means to secure the lid onto the can.

5. Place one or more metal cans into a strong outside container (like a picnic cooler or a DOT-approved fiberboard box). Surround cans with noncombustible, absorbent cushioning material for stability during transport. Total sample volume in the picnic cooler or fiberboard box should not exceed 40 liters.

C. Chain of Custody

Include the Custody Transfer Record/Lab Work Request form (properly executed) in the outside container. It is also recommended to use chain-of-custody tape over each can lid.

D. Marking and Labeling Samples Classified as Other Regulated Substances

1. Use abbreviations only where specified.

2. Place the information listed below on each paint can.

   - Laboratory name and address

   - Other regulated substances, UN8027. Hazardous Class # 9

3. Information placed on cans should also be placed on at least one side of the outside shipping containers. If labelling is placed on more than one side, it must be attached to all visible sides.

4. Cargo Aircraft Only must be printed on all outside shipping containers.

5. Print Laboratory Samples and This End Up or This Side Up clearly on top of the outside shipping container. Outside containers also must contain the statement Inside Packages to Comply with Prescribed Specifications. Put upward pointing arrows on all four sides of the container.

E. Shipping Papers for Samples Classified as Other Regulated Substances

Shipping papers must be provided for the shipment of all samples (including those transported by rental, government, company, or personal cars).

F. Bill of Lading/Certification Statement

Complete the bill of lading and sign the certification statement. If the carrier does not provide it, use a standard industry form. Provide the information listed below in the order listed. One form may be used for more than one outside container.

- Other Regulated substances, UN8027

- Class or Division # 9

- Net weight or net volume (weight or volume may be abbreviated) just before or after the UN or ID number.

- Further description (like Laboratory Samples) is allowed if it does not contradict required information.

G. Transportation

1. Transport samples of unknown hazardous material that are classified as other regulated substances by rented or common carrier truck, railroad, express overnight package services, or other appropriate means.

2. Do not transport by any passenger-carrying air transport system. Ship by air carriers that transport only cargo (for example, Federal Express).

STANDARD OPERATING PROCEDURE 1.6

GENERAL EQUIPMENT DECONTAMINATION

1. PURPOSE

To describe methods for the decontamination of field equipment potentially contaminated during sample collection.

2. DISCUSSION

The Remedial Investigation Plan (RIP) provides information about the scope and details of a given operation. The RIP also contains specifications for the use of decontamination agents, areas where decontamination will be performed, and quality assurance procedures to verify the effectiveness of the decontamination procedures. Decontamination is performed as a quality assurance measure and a safety precaution. It prevents cross-contamination among samples and helps maintain a clean working environment for the safety of all field personnel.

Decontamination is mainly achieved by rinsing with liquids that include soap or detergent solutions, tap water, deionized water, and methanol. Equipment is allowed to air dry after being cleaned or wiped dry with chemical-free cloths or paper towels. It can then be reused immediately. Steam cleaning should be used whenever visible contamination exists or for large machinery/vehicles.

It is the primary responsibility of the site manager to assure that proper decontamination procedures are followed and that all waste materials produced are properly stored or disposed of. It is the responsibility of all personnel involved with sample collection or decontamination to maintain a clean working environment and ensure that contaminants are not negligently introduced into the environment.

3. PROCEDURES

3.1. Associated Procedures

Before every operation, a review of SOPs 1.1-1.10 is necessary. These SOPs contain information on the performance of field activities. They should be consulted for specific information about equipment and supplies; sample collection, preservation, packaging, and shipping; decontamination procedures; and documentation requirements. Procedures directly associated with this SOP are listed below.

SOP No.	SOP Title
1.1	General Instructions for Field Personnel
1.7	Sampling for Removable Alpha Contamination
6.4	Total Alpha Surface Contamination Measurements
6.11	Beta-Gamma Radiation Measurements Using a Geiger-Mueller Detector

3.2. Preparation

3.2.1. Office

A. Review the RIP and SOPs listed in Section 3.1.

B. Coordinate schedules/actions with the installation staff.

C. Obtain appropriate permission for property access.

D. Assemble the equipment and supplies listed in Appendix 5.1.

E. Notify the analytical laboratory of the decontamination blank sample and the approximate arrival date.

F. Contact the carrier that will transport the sample to obtain information on regulations and specifications.

3.2.2. Documentation

A. Obtain a logbook from the QA officer.

B. There are no forms required to document decontamination procedures and the degree of decontamination attained.

3.2.3. Field

A. Assemble containers and equipment for decontamination.

B. Decontaminate all equipment before use.

3.3. Operation

The extent of known contamination determines the extent to which equipment must be decontaminated. If the extent of contamination cannot be readily determined, clean the equipment on the assumption that it is highly contaminated until enough data are available to allow an accurate assessment of the level of contamination.

Adequate supplies of rinsing liquids and all materials should be available. Perform decontamination in the same level of protective clothing as sampling activities unless a different level of protection is specified in the RIP Health and Safety Plan.

The procedure for full field decontamination follows. Any deviations from this procedure for a specific project are included in the RIP.

Decontamination Steps

1. The purpose of the initial step is to remove gross contamination. Remove any solid particles from the equipment or material by brushing and then rinsing with available tap water. For drilling equipment, steam cleaning is necessary.

2. Wash equipment with soap or detergent solution.

3. Rinse with tap water by submerging or spraying.

4. For organic contaminants, an optional rinse with a solvent (methanol or acetone) may be completed to dissolve and remove contaminants.

5. Rinse thoroughly with distilled water.

6. Air dry equipment or rinse with nanograde methanol to expedite drying.

7. If radiation screening is required by the RIP, screen the equipment with a radiation detector according to SOP 1.7, Sampling for Removable Alpha Contamination; SOP 6.4, Total Alpha Surface Contamination Measurements; or SOP 6.12, Radon-222 Flux Measurements Using Charcoal Canisters. If activity above the limits for unrestricted use is detected, repeat steps 1-6.

8. Samples of drippings from the last rinse in step 5 may be collected and analyzed to verify the effectiveness of the decontamination procedure. This type of sample is called a decontamination blank. The results of these analyses are not usually available for at least one week after they arrive in the laboratory, so it is important to do a thorough decontamination from the start of the sampling activity to minimize the potential for a positive hit in the decontamination drippings.

3.4. Postoperation

3.4.1. Field

A. Decontaminate as much sampling equipment as possible and properly dispose of expendable items that cannot be decontaminated. Proper disposal may involve onsite drumming of liquids and solids in approved containers for subsequent disposal. Expensive items like machinery may require a more advanced decontamination analysis.

B. Prepare the decontamination blank sample and transport it according to SOP 1.3, Sample Control and Documentation; SOP 1.4, Sample Containers and Preservation; and SOP 1.5, Guide to Handling, Packaging, and Shipping of Samples.

C. Store containers of solutions produced during decontamination in a secure area.

D. Dispose of any soiled materials as designated in the RIP.

3.4.2. Documentation

A. Record radiological measurements in the logbook before leaving the site.

B. There are no forms required to document decontamination procedures and the degree of contamination attained.

3.4.3. Office

A. Deliver original logbooks to the site manager for technical review. He/she will review and transmit to the document control officer (copies to the files) for eventual delivery to the Department of Energy.

B. Inventory equipment and supplies. Repair or replace all broken or damaged equipment. Replace expendable items. Return equipment to the equipment manager and report incidents of malfunction or damage.

C. Contact the analytical laboratory to ensure that the sample arrives safely and instructions for analyses are clearly understood.

D. After receiving the results of the laboratory analyses, arrange for the disposal of wastes generated during the investigation.

4. SOURCE

NIOSH, OSHA, USCG and EPA. 1985. "Occupational Safety and Health Guidance Manual for Hazardous Waste Site Activities." prepared by the National Institute for Occupational Safety and Health (NIOSH), Occupational Safety and Health Administration (OSHA), U.S. Coast Guard (USCG), and the U.S. Environmental Protection Agency (EPA). U.S. Department of Health and Human Services, Public Health Service, Centers for Disease Control, NIOSH report, October 1985. Washington, D.C.: U.S. Government Printing Office.

5. APPENDIX

5.1. Equipment and Supplies Checklist

APPENDIX 5.1

EQUIPMENT AND SUPPLIES CHECKLIST

_____ Decontamination solutions preselected by the laboratory

_____ Cleaning liquids: soap or detergent solutions, tap water, deionized water, and methanol

_____ Chemical-free paper towels

_____ Cleaning brushes

_____ Cleaning containers: plastic buckets and galvanized steel pans

_____ Waste storage containers: drums and plastic bags

STANDARD OPERATING PROCEDURE 1.7

SAMPLING FOR REMOVABLE ALPHA CONTAMINATION

1. PURPOSE

To describe a method of verifying that equipment leaving a controlled area that contains radioactive materials meets unrestricted release criteria for removable contamination. This equipment may include tools, vehicles, and miscellaneous items brought into contact with radioactive materials.

2. DISCUSSION

The Remedial Investigation Plan (RIP) provides information on the scope of a given operation, related health and safety requirements, and the applicability of this procedure to the activities.

During the course of sampling in a radiologically contaminated area, various pieces of equipment handled by workers may become contaminated. To ensure safety for workers and compliance with the equipment release criteria set forth in the Health and Safety Plan section of the RIP, equipment must be analyzed for removable contamination. Equipment must be decontaminated to levels that are as low as reasonably achievable--below the applicable release criterion for removable contamination in all cases. Release criteria in draft DOE Order 5480.11 are taken from guidelines provided in the U.S. Nuclear Regulatory Commission (NRC) Regulatory Guide 1.86. The most restrictive limit applies to transuranics, Ra-226, Ra-228, Th-230, Th-228, Pa-231, Ac-227, I-125, and I-129 and is 20 disintegrations per minute (dpm)/100 cm^2 above background for removable contamination. This limit may be used as a default value if alpha emitters are present and the applicable limit is unknown.

The standard technique for verification is to wipe (swipe) an area on a piece of equipment and analyze the swipe sample for elevated levels of radioactivity. A gross-alpha count is performed with an alpha sample counter connected to a portable scaler. The 2π efficiency of the counter must be a least 40%.

It may also be necessary to take direct instrument measurements with portable alpha scintillators or Geiger-Mueller detectors. A comparison of swipe results and direct instrument readings will distinguish between amounts of removable and total contamination.

3. PROCEDURE

3.1. Associated Procedures

Information that applies to most field activities is provided in SOPs 1.1-1.10. In addition to the RIP, those SOPs provide guidance that may supplement the information in this procedure. They should be consulted as necessary to obtain specific information about equipment and supplies; sample collection, preservation, packaging, and shipping; decontamination procedures; and documentation requirements. Procedures directly associated with this SOP are listed below.

SOP No.	SOP Title
1.1	General Instructions for Field Personnel
1.6	General Equipment Decontamination
6.4	Total Alpha Surface Contamination Measurements
6.11	Beta-Gamma Radiation Measurements Using a Geiger-Mueller Detector

3.2. Preparation

3.2.1 Office

A. Review the RIP and SOPs listed in Section 3.1.

B. Coordinate schedules/actions with the installation staff.

C. Obtain appropriate permission for property access.

D. Arrange for a laboratory counting system and personnel to perform the desired radiological analysis of swipes onsite.

E. Assemble the equipment and supplies listed in Appendix 5.1. Ensure the proper operation of all field equipment.

3.2.2. Documentation

A. Obtain a logbook from the QA officer.

B. Record results of the equipment check in the logbook.

C. Obtain a sufficient number of the appropriate ER Program data collection forms (see INDEX TO SOPs).

D. Consult the ER Program data administrator for a current list of codes used in the completion of data forms.

3.2.3. Field

A. Complete the Daily Alpha Efficiency Check form (Appendix 5.2) by following instructions in Appendix 5.4, Data Form Completion.

B. Perform a 10-min background count and a 1-min NBS-traceable alpha source count daily when using the instrument. Record the results on the Daily Alpha Efficiency Check form (Appendix 5.2) and under efficiency on the Removable Alpha Contamination Survey Data form (Appendix 5.3). The efficiency is calculated as shown below.

$$\text{Efficiency} = \frac{\text{net source counts per minute (cpm)} - \text{background cpm}}{\text{source dpm}}$$

Any significant deviation of the efficiency from previous days or from the average may be a signal that the instrument is malfunctioning and should be investigated. Any significant increase in the 10-min background count usually indicates that the probe is contaminated and should be cleaned thoroughly.

3.3. Operation

3.3.1 Swipe Test

A. Label all swipe envelopes with the date, time, description or number of the item swiped, the location, and the initials of the person who collected the swipe sample. Make sure a sufficient number of swipes are available for the desired tasks.

B. If swipes are to be taken in a controlled area, wear appropriate protective clothing. Consult the Health and Safety Plan for the level of protection.

C. Obtain swipes from an area of 100 cm^2 when possible, noting the area swiped or surveyed in cm^2 on the Removable Alpha Contamination Survey Data form (Appendix 5.2). When it is not possible to cover this area, make an estimate of the surface area (in cm^2). For convenience, 100 cm^2 can be approximated by a square that is 4 inches on each side. If contamination is detected on a swipe taken from an area greater than 100 cm^2, the area must be reswiped in 100 cm^2 increments to ensure that a hot spot in excess of the limit is not present.

D. Use sufficient pressure on the swipe to pick up loose contamination without tearing or separating the swipe. Rough surfaces like concrete, cast iron, and rough-cut lumber should be surveyed according to SOP 6.4, Total Alpha Surface Contamination Measurements, and 6.11, Beta-Gamma Radiation Measurements Using a Geiger-Mueller Detector.

E. During routine swipe surveys, pay particular attention to areas on equipment where contamination is most likely to occur (for example, handles, footrests, and tires).

E. Return the swipe to a properly labeled glassine envelope. Maintain the swipe integrity and ensure that the sample material is not dislodged from the swipe.

G. Count each swipe with the alpha sample counter and scaler by inserting the swipe into the slide tray, closing the tray, and starting a 1-min count. This time may have to be decreased for swipes with high activity. Any swipe that appears to exceed the release criterion should be counted more than once for confirmation. Release criteria are described in Appendix 5.5, Limits for Removable Surface Contamination.

H. Record all results on the Removable Alpha Contamination Survey Data form (Appendix 5.3) according to instructions in Appendix 5.4, Data Form Completion.

I. Give the survey results to the personnel responsible for releasing equipment. Save any swipes that exceed the removable contamination limit in case a recount or additional analysis is needed. Equipment that fails to meet the release limits must undergo additional decontamination according to SOP 1.6, General Equipment Decontamination, and must be resurveyed.

3.4. Postoperation

3.4.1. Field

A. Ensure that all equipment is accounted for, decontaminated (see SOP 1.6, General Equipment Decontamination), and ready for shipment.

B. Return all equipment to the storage area. Be certain the ratemeter/scaler is in the off position.

C. Equipment that fails to meet the release criteria after repeated decontamination efforts must be held from unrestricted release.

D. Make sure that swiped items are properly numbered or marked and identifications are readily visible and permanent.

3.4.2. Documentation

A. Record any uncompleted work (like uncounted swipes or items needing decontamination) in the logbook.

B. Complete logbook entries, verify the accuracy of entries, and sign/initial all pages.

C. Review data collection forms for completeness.

3.4.3. Office

A. Deliver original forms and logbooks to the document control officer (with copies to the site manager and files) for eventual delivery to the Department of Energy.

B. Inventory equipment and supplies. Repair or replace all broken or damaged equipment. Replace expendable items. Return equipment to the equipment manager and report incidents of malfunction or damage.

C. Ensure that all radiological sources and standards have been stored in a locked area.

4. SOURCE

U.S. Nuclear Regulatory Commission. 1974. Regulatory Guide 1.86, "Termination of Operating Licenses for Nuclear Reactors." Washington, D.C.: U.S. Government Printing Office.

5. APPENDIXES

5.1 Equipment and Supplies Checklist

5.2 Daily Alpha Efficiency Check Form

5.3 Removable Alpha Contamination Survey Data Form

5.4 Data Form Completion

5.5 Limits for Removable Surface Contamination

APPENDIX 5.1

EQUIPMENT AND SUPPLIES CHECKLIST

_____ Round swipe pads, 2-inch diameter

_____ Sample holders or glassine envelopes

_____ Indelible marker

_____ Latex gloves

_____ Alpha detector, Ludlum model 43-10 or the equivalent

_____ Portable scaler (Ludlum 2200 or the equivalent) and connecting cable

_____ Forceps (for handling contaminated swipes)

_____ NBS-traceable alpha source, like Am-241

_____ Hand-held calculator

APPENDIX 5.2

DAILY ALPHA EFFICIENCY CHECK FORM

DAILY ALPHA EFFICIENCY CHECK

FACILITY CODE _____ FIELD REP _____

LOGGER CODE _____ ACCEPTANCE CODE _____

RATEMETER/SCALER:

MODEL NO _____ SERIAL NO _____ CALIBRATION DATE _____

WINDOW OUT THRESHOLD _____ HIGH VOLTAGE _____ BATTERY _____

ALPHA SCINTILLATION PROBE:

MODEL NO _____ SERIAL NO _____ CALIBRATION DATE _____

SOURCE:

SERIAL NO _____ ISOTOPE _____ ACTIVITY _____ DPM

LOG DATE	TIME (HH:MM)	COUNTING TIME (MIN)	BACKGROUND CPM	GROSS COUNTS	GROSS CPM	NET CPM	EFFICIENCY (NET CPM/DPM)

ACCEPTANCE CODES: A—ACCEPTABLE R—RECONNAISSANCE U—UNACCEPTABLE N—NOT DETERMINED

COMPLETE BOLDED DATA FOR ENTRY INTO TIMS
DAE-103 (3/88)

_____ FORM COMPLETED BY/DATE

_____ TECHNICAL REVIEWER/DATE

APPENDIX 5.3

REMOVABLE ALPHA CONTAMINATION SURVEY DATA FORM

REMOVABLE ALPHA CONTAMINATION SURVEY DATA

FACILITY CODE _____ LOG DATE _____

LOGGER CODE _____ FIELD REP _____

ACCEPTANCE CODE _____

RATEMETER/SCALER:

MODEL NO _____ SERIAL NO _____ CALIBRATION DATE _____

WINDOW OUT THRESHOLD _____ HIGH VOLTAGE _____ BATTERY _____

ALPHA PROBE:

MODEL NO _____ SERIAL NO _____ CALIBRATION DATE _____

DATE/TIME OF EFF CHECK _____ EFFICIENCY _____ CPM/DPM

COMMENTS _____

ITEM SURVEYED (SPECIFY)	INSTRUMENT READING (cpm)	AREA SURVEYED (cm^2)	ADJUSTED COUNT RATE[1] (cpm/100cm^2)	CONTAMINATION LEVEL[2] (dpm/100cm^2)	WITHIN RELEASE LIMIT? (YES/NO)

1 ADJUSTED COUNT RATE = $\left(\frac{100\ cm^2}{\text{AREA SWIPED IN } cm^2}\right)$ X INSTRUMENT READING

2 CONTAMINATION LEVEL IN dpm/100 cm^2 = $\frac{\text{ADJUSTED COUNT RATE}}{\text{EFFICIENCY}}$

ACCEPTANCE CODES: A–ACCEPTABLE R–RECONNAISSANCE U–UNACCEPTABLE N–NOT DETERMINED

COMPLETE BOLDED DATA FOR ENTRY INTO TIMS
ACS–104 (3/88)

_____ FORM COMPLETED BY/DATE

_____ TECHNICAL REVIEWER/DATE

APPENDIX 5.4

DATA FORM COMPLETION

Use a pen with black ink that is not water soluble (not a felt-tip pen). Make an entry in each blank. Where there is no data entry, enter UNK for Unknown, NA for Not Applicable, or ND for Not Done. If any procedure was not performed as prescribed, give the reason for the change or omission on the form. To change an entry, draw a single line through it, add the correct information above it, and initial the change.

DAILY ALPHA EFFICIENCY CHECK FORM

1. Facility Code. Five-character code abbreviating the facility name where program activity is being conducted. The first three characters indicate the facility, and the remaining two numbers designate the specific site within the facility.

2. Field Rep. The name of the field representative.

3. Logger Code. Three-character or four-character code identifying the company responsible for collecting the information recorded on the form.

4. Acceptance Code. One-character code assigned by the site manager.

5. Ratemeter/Scaler Model No. The model number of the ratemeter/scaler.

6. Ratemeter/Scaler Serial No. The serial number of the ratemeter/scaler.

7. Ratemeter/Scaler Calibration Date. The date when the ratemeter/scaler was last calibrated.

8. Window. The window is in the out position unless otherwise specified.

9. Threshold. The adjustment for the lower energy level of the discriminator shown on the calibration sticker.

10. High Voltage. The voltage that is applied to the detector shown on the calibration sticker.

11. Battery. The battery voltage reading at the beginning of the measurement.

12. Probe Model No. The model number of the alpha scintillation probe.

13. Probe Serial No. The serial number of the alpha scintillation probe.

14. Probe Calibration Date. The date when the alpha scintillation probe was last calibrated.

15. Source Serial No. The serial number of the radiation source.

16. Source Isotope. The radioactive isotope contained in the source and given as an element and mass number, like Am-241.

17. Source Activity. The activity of the radioactive source. An activity given in microcuries (μCi) can be converted to disintegrations per minute (dpm) using 2.22×10^6 dpm = 1 μCi.

18. Log Date. The date the information recorded on the form was obtained in the format DD-MMM-YY (01-JAN-88).

19. Time (HH:MM). The time the efficiency was determined using the 24-hr clock in the format hours:minutes.

20. Counting Time (Min). The time in minutes over which the scaler counts. Enter NA if using a ratemeter.

21. Background cpm. The count rate resulting from the 10-min background count.

$$\text{Background counts per minute (cpm)} = \frac{\text{10-min background count}}{10}$$

22. Gross Counts. The number of pulses recorded by the ratemeter/scaler during the 1-min source-counting time. Enter NA if using a ratemeter.

23. Gross cpm. The gross count rate of the source given in pulses per minute.

24. Net cpm. This is equal to the gross cpm minus the background cpm.

25. Efficiency (Net cpm/dpm). The ratio of the observed net count rate to the true disintegration rate (dpm).

$$\text{Efficiency} = \frac{\text{Net cpm}}{\text{Source dpm}}$$

APPENDIX 5.4, Continued

ALPHA CONTAMINATION SURVEY DATA FORM

1. Facility Code. Five-character code abbreviating the facility name where program activity is being conducted. The first three characters indicate the facility, and the remaining two numbers designate the specific site within the facility.

2. Log Date. The date the information recorded on the form was obtained in the format DD-MMM-YY (01-JAN-88).

3. Logger Code. Three-character or four-character code identifying the company responsible for collecting the information recorded on the form.

4. Field Rep. The name of the field representative.

5. Acceptance Code. One-character code assigned by the site manager.

6. Ratemeter/Scaler Model No. The model number of the ratemeter/scaler.

7. Ratemeter/Scaler Serial No. The serial number of the ratemeter/scaler.

8. Ratemeter/Scaler Calibration Date. The date when the ratemeter/scaler was last calibrated.

9. Window. The window will be in the out position unless otherwise specified.

10. Threshold. The adjustment for the lower energy level of the discriminator. This is determined during calibration before instrument use in the field.

11. High Voltage. The voltage that is applied to the detector. The operating voltage for an alpha detector is typically 500 to 700 volts. The voltage is determined by a voltage plateau during calibration.

12. Battery. The battery voltage reading at the beginning of the measurement.

13. Alpha Probe Model No. The model number of the alpha scintillation probe.

14. Alpha Probe Serial No. The serial number of the alpha scintillation probe.

15. Alpha Probe Calibration Date. The date when the probe was last calibrated.

16. Date/Time of Eff Check. The date and time of the last efficiency check from the Daily Alpha Efficiency Check form.

17. Efficiency. Ratio of observed count rate to the known disintegration rate of the check source from the Daily Alpha Efficiency Check form.

18. Comments. Any additional information.

19. Item Surveyed (Specify). A description of the article swiped.

20. Instrument Reading (cpm). The count rate in counts per minute for the swipe.

21. Area Surveyed (cm^2). The swiped area measured in cm^2.

22. Adjusted Count Rate (cpm/100 cm^2). If the area swiped was 100 cm^2, this is the meter cpm reading. If the swiped area was not 100 cm^2, the cpm reading must be adjusted to cpm/100 cm^2 in order to apply the release limits from Appendix 5.5. The formula shown below is used.

$$\text{Adjusted cpm} = \frac{100\ cm^2}{\text{area swiped in } cm^2} \times \text{Instrument reading in cpm}$$

23. Contamination Level (dpm/100 cm^2). The surface contamination level in units of dpm per 100 cm^2. Because the swiped area was adjusted to 100 cm^2, the removable contamination level is the instrument reading divided by the efficiency.

$$\text{Contamination level (dpm/100 } cm^2\text{)} = \frac{\text{Adjusted cpm}}{\text{Efficiency}}$$

24. Within Release Limit? (Yes/No). The result of a comparison of the contamination level with the applicable release limit. The result may be abbreviated Y for yes if the measured contamination is less than the limit; N is used for no if above the limit.

APPENDIX 5.5

LIMITS FOR REMOVABLE SURFACE CONTAMINATION

NUCLIDE[a]	REMOVABLE[b c]
U-nat, U-235,U-238, and associated decay products	1000 dpm α/100 cm^2
Transuranics, Ra-226, Ra-228, Th-230, Th-228, Pa-231, Ac-227, I-125, and I-129	20 dpm/100 cm^2
Th-nat, Th-232, Sr-90, Ra-223, Ra-224, U-232, I-126, I-131, and I-133	200 dpm/100 cm^2
Beta-gamma emitters (nuclides with decay modes other than alpha emission or spontaneous fission) except Sr-90 and others noted above	1000 dpm $\beta\gamma$/100 cm^2

[a] Where surface contamination by both alpha- and beta-gamma-emitting nuclides exists, the limits established for alpha- and beta-gamma-emitting nuclides should apply independently.

[b] As used in this table, disintegrations per minute (dpm) means the rate of emission by radioactive material as determined by correcting the counts per minute observed by an appropriate detector for background, efficiency, and geometric factors associated with the instrumentation.

[c] The amount of removable radioactive material per 100 cm^2 of surface area should be determined by wiping that area with dry filter or soft absorbent paper, applying moderate pressure, and assessing the amount of radioactive material on the wipe with an appropriate instrument of known efficiency. When removable contamination on objects of less surface area is determined, the pertinent levels should be reduced proportionally. The entire surface should be wiped.

STANDARD OPERATING PROCEDURE 1.8

PERSONNEL DECONTAMINATION--LEVEL D PROTECTION

1. PURPOSE

To describe the equipment and procedures required for the decontamination of persons who have performed field activities in Level D protective clothing.

2. DISCUSSION

The Remedial Investigation Plan (RIP) provides information about the scope and details of a specific operation. Refer to the RIP Health and Safety Plan for recommendations about the level of protection worn to enter a site and the criteria for upgrading to higher levels of protection.

Level D protective clothing is primarily a work uniform. This level of protection is worn when work functions preclude splashes, immersion, inhalation, or exposure to materials above the action limits specified in the RIP.

Although Level D protection is worn under these conditions, workers may be wearing disposable coveralls and gloves, safety boots/shoes, a hard hat, and safety glasses. Therefore, the site Health and Safety Plan must address the proper disposition of disposable clothing and decontamination measures that should be implemented. The disposition of disposable items must follow installation requirements and any applicable state and federal regulations.

3. PROCEDURES

3.1. Associated Procedures

Before every operation, a review of the SOPs 1.1-1.10 is necessary. These SOPs contain information on the performance of field activities. They should be consulted for specific information on equipment and supplies; sample collection, preservation, packaging, and shipping; documentation procedures; and documentation requirements. Procedures directly associated with this SOP are listed below.

SOP No.	SOP Title
1.1	General Instructions for Field Personnel
1.6	General Equipment Decontamination
1.9	Personnel Decontamination--Level C Protection
1.10	Personnel Decontamination--Level B Protection

3.2. Preparation

3.2.1. Office

A. Review the RIP and SOPs listed in Section 3.1.

B. The RIP Health and Safety Plan will specify the procedures and equipment required for the decontamination and disposal of Level D protective clothing. All onsite personnel will be informed about the proper disposal of protective clothing and any decontamination solutions used.

C. Appendix 5.1 lists the items suggested for Level D decontamination. This list provides general guidelines and can be modified in order to meet site-specific work activities or features.

D. Obtain necessary clothing, protective gear, and equipment. Read the Health and Safety Plan and ensure that necessary decontamination materials are available.

3.2.2. Documentation

A. Obtain a logbook from the QA officer.

B. There are no forms required to document decontamination procedures and the degree of decontamination attained.

3.2.3. Field

Before initiating field activities, designate an area for decontamination activities. Although Level D areas should be minimally contaminated, always use caution to prevent the potential spread of any unknown contaminants.

3.3. Operation

The following decontamination procedures are recommended for Level D protection. These measures represent suggested guidelines and may be modified to meet site-specific conditions.

A. Remove any disposable coveralls, rubber gloves, and boot covers and place in a plastic trash sack.

B. If dusty conditions have been encountered, use water-dampened paper towels to remove the dust from hard hats and safety glasses/goggles. Place used paper towels in a trash sack.

C. If necessary, decontaminate safety boots with water and a steel brush. Do not wear muddy or dusty boots out of the exclusion zone.

D. All workers should wash hands and face before leaving the site.

E. All workers should change clothing and shower as soon as possible after the day's work activities.

3.4. Postoperation

3.4.1. Field

Collect all trash sacks containing disposable clothing. Dispose of trash sacks according to the requirements of the site Health and Safety Plan. The site manager or field team leader is responsible for the safe disposal of any items.

3.4.2. Documentation

A. Record radiological measurements in the logbook before leaving the site.

B. There are no forms required to document decontamination procedures and the degree of decontamination attained.

3.4.3. Office

Return all unused items to the equipment manager. The equipment manager should be informed of all stock items that need to be ordered to replenish the inventory.

4. SOURCES

NIOSH, OSHA, USCG and EPA. 1985. "Occupational Safety and Health Guidance Manual for Hazardous Waste Site Activities." Prepared by the National Institute for Occupational Safety and Health (NIOSH), Occupational Safety and Health Administration (OSHA), U.S. Coast Guard (USCG) and the U.S. Environmental Protection Agency (EPA). U.S. Department of Health and Human Services, Public Health Service, Centers for Disease Control, NIOSH report, October 1985. Washington, D.C.: U.S. Government Printing Office.

EPA. 1984. "Standard Operating Safety Guides." Environmental Response Branch, Hazardous Response Support Division, Office of Emergency and Remedial Response, U.S. Environmental Protection Agency, November 1984. Washington, D.C.: U.S. Government Printing Office.

5. APPENDIX

5.1. Equipment and Supplies Checklist

APPENDIX 5.1

EQUIPMENT AND SUPPLIES CHECKLIST

_____ Plastic trash sacks
30-gallon size: (no. of boxes) _____
20-gallon size: (no. of boxes) _____

_____ Plastic wash tub: (number) _____

_____ Paper towels: (no. of rolls)_____

_____ Liquid hand soap

_____ Wet wipe towelettes

_____ Water container
(size) 1 gallon_____ 5 gallon_____

_____ Brushes (scrub or wire)

_____ Alpha scintillation detector

STANDARD OPERATING PROCEDURE 1.9

PERSONNEL DECONTAMINATION--LEVEL C PROTECTION

1. PURPOSE

To describe the equipment and procedures required for the decontamination of persons who have performed field activities in Level C protective clothing.

2. DISCUSSION

The Remedial Investigation Plan (RIP) provides information regarding the scope and details of a specific operation. Refer to the RIP Health and Safety Plan for recommendations about the level of protection worn to enter a site and the criteria for upgrading or downgrading to other levels of protection.

Protective clothing and equipment must be worn by personnel when known or suspected hazardous substances are involved. The necessary equipment and procedures for decontaminating personnel in Level C protection are addressed in this SOP. The procedures include maximum and minimum decontamination measures.

The establishment of decontamination lines is site specific; these lines depend upon the types of contamination and the work performed. When the decontamination line is no longer required, contaminated wash and rinse solutions and articles must be contained and disposed of appropriately. Disposal must follow installation requirements and any applicable state and federal regulations.

3. PROCEDURES

3.1. Associated Procedures

Before every operation, a review of the SOPs 1.1-1.10 is necessary. These SOPs contain information on the performance of field activities. They should be consulted for specific information on equipment and supplies; sample collection, preservation, packaging, and shipping; decontamination procedures; and documentation requirements. Procedures directly associated with this SOP are listed below.

SOP No.	SOP Title
1.1	General Instructions for Field Personnel
1.6	General Equipment Decontamination
1.8	Personnel Decontamination--Level D Protection
1.10	Personnel Decontamination--Level B Protection

3.2. Preparation

3.2.1. Office

A. Review the RIP and SOPs listed in Section 3.1.

B. The selection of the appropriate level of personnel decontamination is site specific and is given in the site Health and Safety Plan. Coordinate any changes with the site health and safety coordinator. Considerations for selection include work activity, known or suspected contaminants, previous experience at the site, and health and safety requirements.

C. The site Health and Safety Plan should include details of the procedures for the ultimate disposal of protective clothing and waste water. The packaging and disposal procedures must be approved by the installation authorities responsible for waste disposal. Inform all onsite personnel about the proper disposal of protective clothing and decontamination solutions.

D. Appendix 5.1 includes recommendations for equipment and supplies used in maximum decontamination measures. Appendix 5.2 includes recommendations for equipment and supplies used in minimum decontamination measures. These appendixes contain general equipment guidelines. The selection of equipment must be site specific to incorporate unusual work activities or site features. Detailed information is in the RIP.

3.2.2. Documentation

A. Obtain a logbook from the QA officer.

B. There are no forms required to document decontamination procedures and the degree of decontamination attained.

3.2.3. Field

A. Before field activities begin, establish site work zones to prevent the accidental spread of hazardous substances. The establishment of work zones is site specific and coordinated with the site health and safety coordinator at the time the Health and Safety Plan is prepared. Considerations for establishing work zones should include wind direction, weather conditions, emergency situations, changes in site activities, and access.

B. Appendix 5.3 shows an example of a maximum decontamination layout for Level C protection. Appendix 5.4 shows an example of the minimum decontamination layout for Level C protection.

NOTE: The layouts may be modified according to site-specific conditions.

3.3. Operation

3.3.1. Maximum Decontamination Measures

The maximum decontamination measures for Level C are described in Appendix 5.5. These measures are guidelines and may be modified according to site-specific conditions.

3.3.2. Modification of Maximum Decontamination Measures

Depending upon site-specific conditions and circumstances, modifications to the maximum decontamination measures may be permissible. Two example situations in which the maximum decontamination measures may be modified are described below.

A. Situation 1--The individual entering the contamination reduction zone is expected to be minimally contaminated. Extremely skin-corrosive materials are not present. Outer gloves and boot covers are worn. The inner gloves and safety boots are not contaminated.

   The following decontamination stations described in Appendix 5.5 would be utilized in this situation: Station Numbers 1, 4-8, 10-11, and 14-17.

B. Situation 2--The individual entering the contamination reduction zone is expected to be minimally contaminated. Extremely toxic or skin-corrosive materials are not present. Outer gloves and boot covers are worn. The inner gloves and safety boots are not contaminated. The individual needs a new canister or mask and will return to the exclusion zone.

   The following decontamination stations described in Appendix 5.5 would be utilized in this situation: Station Numbers 1 and 4-9.

3.3.3. Minimum Decontamination Measures

The minimum decontamination measures for Level C are described in Appendix 5.6. These measures are guidelines and may be modified according to site-specific conditions.

3.4. Postoperation

3.4.1. Field

After the completion of field activities, all contaminated wash and rinse waters, decontamination solutions, and contaminated articles must be properly disposed of. The disposal methods must follow installation requirements. The site manager or field team leader is responsible for the safe disposal of contaminated materials. Planning for the proper disposal should be included during office preparation before field activities begin.

3.4.2. Documentation

A. Record radiological measurements in the logbook before leaving the site.

B. There are no forms required to document decontamination procedures and the degree of decontamination attained.

3.4.3. Office

Return all unused or properly decontaminated equipment will be returned to the equipment manager. The equipment manager should be informed of all stock items that need to be ordered to replenish the inventory.

4. SOURCES

NIOSH, OSHA, USCG and EPA. 1985. "Occupational Safety and Health Guidance Manual for Hazardous Waste Site Activities." Prepared by the National Institute for Occupational Safety and Health (NIOSH), Occupational Safety and Health Administration (OSHA), U.S. Coast Guard (USCG), and the U.S. Environmental Protection Agency (EPA). U.S. Department of Health and Human Services, Public Health Service, Centers for Disease Control, NIOSH report, October 1985. Washington, D.C.: U.S. Government Printing Office.

EPA. 1984. "Standard Operating Safety Guides." Environmental Response Branch, Hazardous Response Support Division, Office of Emergency and Remedial Response, U.S. Environmental Protection Agency document, November 1984. Washington, D.C.: U.S. Government Printing Office.

5. APPENDIXES

5.1. Equipment and Supplies for Maximum Decontamination Measures for Level C

5.2. Equipment and Supplies for Minimum Decontamination Measure for Level C

5.3. Maximum Decontamination Layout for Level C Protection

5.4. Minimum Decontamination Layout for Level C Protection

5.5. Maximum Measures for Level C Decontamination

5.6. Minimum Measures for Level C Decontamination

APPENDIX 5.1

EQUIPMENT AND SUPPLIES FOR MAXIMUM DECONTAMINATION MEASURES FOR LEVEL C

Station 1:
a. Various Size Containers
b. Plastic Liners
c. Plastic Drop Cloths

Station 2:
a. Containers (20-30 Gallons)
b. Decon Solution or Detergent Water
c. 2-3 Long-handled, Soft-bristled Scrub Brushes

Station 3:
a. Containers (20-30 Gallons)
or
High-pressure Spray Unit
b. Water
c. 2-3 Long-handled, Soft-bristled Scrub Brushes

Station 4:
a. Containers (20-30 Gallons)
b. Plastic Liners

Station 5:
a. Containers (20-30 Gallons)
b. Plastic Liners
c. Bench or Stools

Station 6:
a. Containers (20-30 Gallons)
b. Plastic Liners

Station 7:
a. Containers (20-30 Gallons)
b. Decon Solution or Detergent Water
c. 2-3 Long-handled, Soft-bristled Scrub Brushes

Station 8:
a. Containers (20-30 Gallons)
or
High-pressure spray Unit
b. Water
c. 2-3 Long-handled, Soft-bristled Scrub Brushes

Station 9:
a. Air Tanks or Face Masks and Cartridge, Depending on Level
b. Tape
c. Boot Covers
d. Gloves

Station 10:
a. Containers (20-30 Gallons)
b. Plastic Liners
c. Bench or Stools
d. Boot Jack

Station 11:
a. Rack
b. Drop Cloths
c. Bench or Stools

Station 12:
a. Table

Station 13:
a. Basin or Bucket
b. Decon Solution
c. Small Table

Station 14:
a. Water
b. Basin or Bucket
c. Small Table

Station 15:
a. Containers (20-30 Gallons)
b. Plastic Liners

Station 16:
a. Containers (20-30 Gallons)
b. Plastic Liners

Station 17:
a. Containers (20-30 Gallons)
b. Plastic Liners

Station 18:
a. Water
b. Soap
c. Small Table
d. Basin or Bucket
e. Field Showers
f. Towels

Station 19:
a. Dressing Trailer in Inclement Weather
b. Tables
c. Chairs
d. Lockers
e. Cloths

Sources: NIOSH, OSHA, USCG and EPA, October 1985.
U.S. EPA, November 1984.

APPENDIX 5.2

EQUIPMENT AND SUPPLIES FOR MINIMUM DECONTAMINATION MEASURES FOR LEVEL C

Station 1:
- a. Various Size Containers
- b. Plastic Liners
- c. Plastic Drop Cloths

Station 2:
- a. Containers (20-30 Gallons)
- b. Decon Solution
- c. Rinse Water
- d. 2-3 Long-handled, Soft-bristled Scrub Brushes

Station 3:
- a. Containers (20-30 Gallons)
- b. Plastic Liners
- c. Bench or Stools

Station 4:
- a. Air Tanks or Masks and Cartridges, Depending Upon
- b. Tape
- c. Boot Covers
- d. Gloves

Station 5:
- a. Containers (20-30 Gallons)
- b. Plastic Liners
- c. Bench or Stools

Station 6:
- a. Plastic Sheets
- b. Basin or Bucket
- c. Soap and Towels
- d. Bench or Stools

Station 7:
- a. Water
- b. Soap
- c. Tables
- d. Wash Basin or Bucket

Sources: NIOSH, OSHA, USCG and EPA, October 1985.
U.S. EPA, November 1984.

APPENDIX 5.3

MAXIMUM DECONTAMINATION LAYOUT FOR LEVEL C PROTECTION

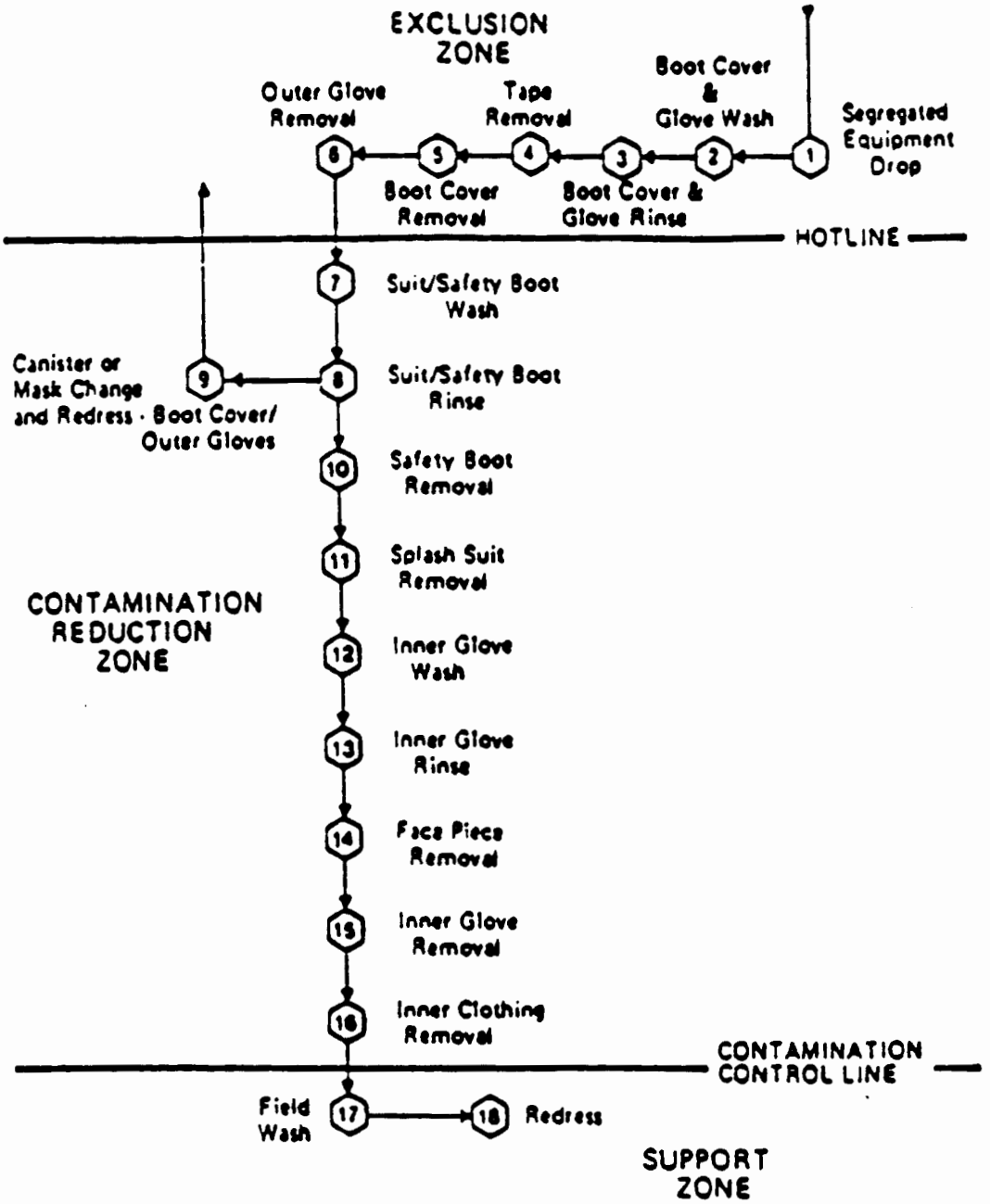

APPENDIX 5.4

MINIMUM DECONTAMINATION LAYOUT FOR LEVEL C PROTECTION

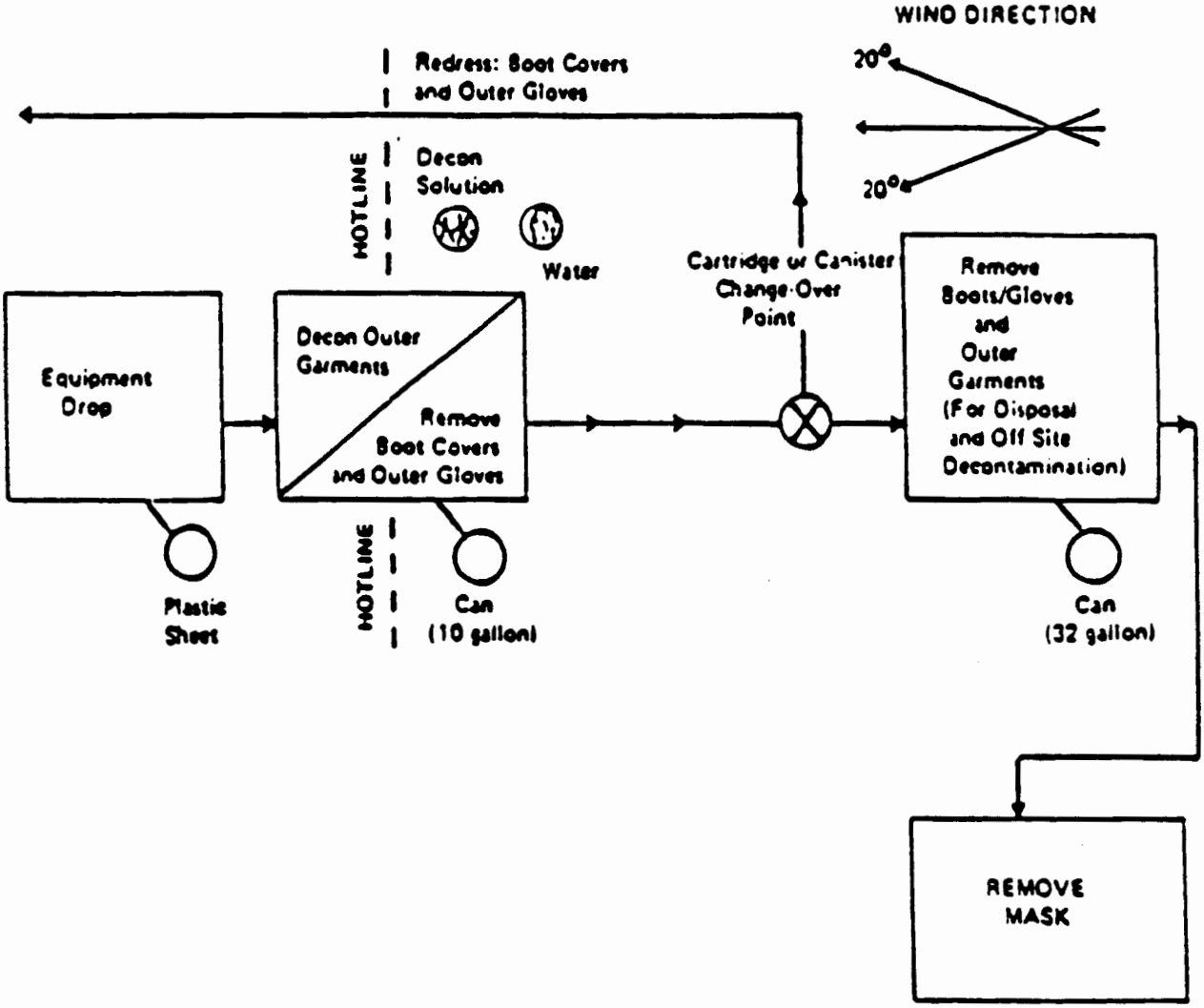

APPENDIX 5.5

MAXIMUM MEASURES FOR LEVEL C DECONTAMINATION

Station 1:	Segregated Equipment Drop	1. Deposit equipment used at the site (tools, sampling devices and containers, monitoring instruments, radios, and clipboards) on plastic drop cloths or in different containers with plastic liners. Segregation at the drop reduces the probability of cross-contamination. During hot weather operations, a cool-down station may be set up within this area.
Station 2:	Boot Cover and Glove Wash	2. Scrub outer boot covers and gloves with decon solution or detergent and water.
Station 3:	Boot Cover and Glove Rinse	3. Rinse off decon solution from station 2 using copious amounts of water.
Station 4:	Tape Removal	4. Remove tape around boots and gloves and deposit in container with plastic liner.
Station 5:	Boot Cover Removal	5. Remove boot covers and deposit in containers with plastic liner.
Station 6:	Outer Glove Removal	6. Remove outer gloves and deposit in container with plastic liner.
Station 7:	Suit and Boot Wash	7. Wash splash suit, gloves, and safety boots. Scrub with long-handled scrub brush and decon solution.
Station 8:	Suit and Boot and Glove Rinse	8. Rinse off decon solution using water. Repeat as many times as necessary.
Station 9:	Canister or Mask Change	9. If worker leaves exclusion zone to change canister (or mask), this is the last step in the decontamination procedure. The worker's canister is exchanged. New outer gloves and boot covers are put on, and joints are taped. The worker returns to duty.

APPENDIX 5.5, Continued

MAXIMUM MEASURES FOR LEVEL C DECONTAMINATION

Station 10:	Safety Boot Removal	10. Remove safety boots and deposit in container with plastic liner.
Station 11:	Splash Suit Removal	11. With assistance of helper, remove splash suit. Deposit in container with plastic liner.
Station 12:	Inner Glove Rinse	12. Wash inner gloves with decon solution.
Station 13:	Inner Glove Wash	13. Rinse inner gloves with water.
Station 14:	Face Piece Removal	14. Remove face piece. Deposit in container with plastic liner. Avoid touching face with fingers.
Station 15:	Inner Glove Removal	15. Remove inner gloves and deposit in lined container.
Station 16:	Inner Clothing Removal	16. Remove clothing soaked with perspiration and place in lined container. Do not wear inner clothing away from the site, because there is a possibility that small amounts of contaminants might have been transferred in removing the outer clothing. When applicable, begin a gross alpha contamination survey.
Station 17:	Field Wash	17. Shower if highly toxic, skin-corrosive, or skin-absorbable materials are known or suspected to be present. Wash hands and face if shower is not available.
Station 18:	Redress	18. Put on clean clothes.

Sources: NIOSH, OSHA, USCG and EPA, October 1985.
U.S. EPA, November 1984.

STANDARD OPERATING PROCEDURE 1.10

PERSONNEL DECONTAMINATION--LEVEL B PROTECTION

1. PURPOSE

To describe the equipment and procedures required for decontamination of persons who have performed field activities in Level B protective clothing.

2. DISCUSSION

The Remedial Investigation Plan (RIP) provides information about the scope and details of a specific operation. Refer to the RIP Health and Safety Plan for recommendations about the level of protection worn to enter a site and the criteria for upgrading or downgrading to other levels of protection.

Protective clothing and equipment must be worn by personnel when known or suspected hazardous substances are involved. The necessary equipment and procedures for decontaminating personnel in Level B protection are addressed in this SOP. The procedures include maximum and minimum decontamination measures.

The establishment of decontamination lines is site specific. These lines depend upon the types of contamination and the work performed. When the decontamination line is no longer required, contaminated wash and rinse solutions and articles must be contained and disposed of appropriately. Disposal must follow installation requirements and any applicable state and federal regulations.

3. PROCEDURES

3.1. Associated Procedures

Before every operation, a review of the SOPs 1.1-1.10 is necessary. These SOPs contain information on the performance of field activities. They should be consulted for specific information on equipment and supplies; sample collection, preservation, packaging, and shipping; decontamination procedures; and documentation requirements. Other procedures directly associated with this SOP are listed below.

SOP No.	SOP Title
1.1	General Instructions for Field Personnel
1.6	General Equipment Decontamination
1.8	Personnel Decontamination--Level D Protection
1.9	Personnel Decontamination--Level C Protection

3.2. Preparation

3.2.1. Office

A. Review the RIP and SOPs listed in Section 3.1.

B. The selection of the appropriate level of personnel decontamination is site specific and determined by the site health and safety coordinator. Consult the site Health and Safety Plan for the level of protection. Considerations for selection include work activity, known or suspected contaminants, previous experience at the site, and the installation of health and safety requirements specified by the facility's management company.

C. The site Health and Safety Plan should include details of the plans for ultimate disposal of protective clothing, waste water, and potentially contaminated articles. The packaging and disposal procedures must be approved by the installation authorities responsible for waste disposal. Inform all onsite personnel about the proper disposal of protective clothing and decontamination solutions.

D. Appendix 5.1 includes recommendations for equipment and supplies used in maximum decontamination measures. Appendix 5.2 includes recommendations for equipment and supplies used in minimum decontamination measures. These appendixes contain general equipment guidelines. The selection of equipment must be site specific to incorporate unusual work activities or site features. Detailed information is in the RIP.

3.2.2. Documentation

A. Obtain a logbook from the QA officer.

B. There are no forms required to document decontamination procedures and the degree of documentation attained.

3.2.3. Field

A. Before field activities begin, establish site work zones to reduce the accidental spread of hazardous substances. The establishment of work zones is site specific and coordinated with the site health and safety coordinator at the time the site Health and Safety Plan is prepared. Considerations for establishing work zones should include wind direction, weather conditions, emergency situations, changes in site activities, and access.

B. Appendix 5.3 shows an example of a maximum decontamination layout for Level B protection. Appendix 5.4 shows an example of the minimal decontamination layout for Level B protection.

NOTE: These layouts may be modified according to site-specific conditions.

APPENDIX 5.5

MAXIMUM MEASURES FOR LEVEL B DECONTAMINATION

Station 1:	Segregated Equipment Drop	1.	Deposit equipment used at the site (tools, sampling devices and containers, monitoring instruments, radios, and clipboards) on plastic drop cloths or in different containers with plastic liners. Segregation at the drop reduces the probability of cross-contamination. During hot weather operations, a cool-down station may be set up within this area.
Station 2:	Boot Cover and Glove Wash	2.	Scrub outer boot covers and gloves with decon solution or detergent and water.
Station 3:	Boot Cover and Glove Rinse	3.	Rinse off decon solution from station 2 using copious amounts of water.
Station 4:	Tape Removal	4.	Remove tape around boots and gloves and deposit in container with plastic liner.
Station 5:	Boot Cover Removal	5.	Remove boot covers and deposit in container with plastic liner.
Station 6:	Outer Glove Removal	6.	Remove outer gloves and deposit in container with plastic liner.
Station 7:	Suit and Safety Boot Wash	7.	Wash chemical-resistant splash suit, SCBA, gloves, and safety boots. Scrub with long-handled scrub brush and decon solution. Wrap SCBA regulator (if belt-mounted type) with plastic to keep out water. Wash backpack assembly with sponges or cloths.

APPENDIX 5.5, Continued

MAXIMUM MEASURES FOR LEVEL B DECONTAMINATION

Station 8:	Suit, SCBA, Boot, and Glove Rinse	8.	Rinse off decon solution using copious amounts of water.
Station 9:	Tank Change	9.	If worker leaves exclusion zone to change air tank, this is the last step in the decontamination procedure. The worker's air tank is exchanged. New outer gloves and boot covers are put on, and joints are taped. The worker returns to duty.
Station 10:	Safety Boot Removal	10.	Remove safety boots and deposit in container with plastic liner.
Station 11:	SCBA Backpack Removal	11.	While still wearing face piece, remove backpack and place on table. Disconnect hose from regulator valve.
Station 12:	Splash Suit Removal	12.	With the assistance of a helper, remove splash suit. Deposit in container with plastic liner.
Station 13:	Inner Glove Wash	13.	Wash inner gloves with decon solution.
Station 14:	Inner Glove Rinse	14.	Rinse inner gloves with water.
Station 15:	Face Piece Removal	15.	Remove face piece. Deposit in container with plastic liner. Avoid touching face with fingers.
Station 16:	Inner Glove Removal	16.	Remove inner gloves and deposit in lined container.

APPENDIX 5.5, Concluded

MAXIMUM MEASURES FOR LEVEL B DECONTAMINATION

Station 17:	Inner Clothing Removal	17. Remove inner clothing. Place in container with liner. Do not wear inner clothing away from the site, because there is a possibility that small amounts of contaminants might have been transferred in removing the outer clothing. Begin a gross alpha radiation survey, when applicable.
Station 18:	Field Wash	18. Shower if highly toxic, skin-corrosive, or skin-absorbable materials are known or suspected to be present. Wash hands and face if shower is not available.
Station 19:	Redress	19. Put on clean clothes.

Sources: NIOSH, OSHA, USCG and EPA, October 1985.
U.S. EPA, November 1984.

APPENDIX 5.6

MINIMUM MEASURES FOR LEVEL B DECONTAMINATION

Station 1:	Equipment Drop	1.	Deposit equipment used at the site (tools,sampling devices and containers, monitoring instruments, radios, and clipboards) on plastic drop cloths. Segregation at the drop reduces the probability of cross-contamination. During hot weather operations, a cool-down station may be set up within this area.
Station 2:	Outer Garment, Boots, and Gloves Wash and Rinse	2.	Scrub outer boots, outer gloves, and chemical-resistant splash suit with decon solution or detergent water. Rinse off with water.
Station 3:	Outer Boot and Glove Removal	3.	Remove outer boots and gloves. Deposit in container with plastic liner.
Station 4:	Tank Change	4.	If worker leaves exclusive zone to change air tank, this is the last step in the decontamination procedure. The worker's air tank is exchanged. New outer gloves and boot covers are put on, and joints are taped. The worker returns to duty.
Station 5:	Boots, Gloves and Outer Garment Removal	5.	Boots, chemical-resistant splash suit, and inner gloves removed and deposited in separate containers lined with plastic.
Station 6:	SCBA Removal	6.	SCBA backpack and face piece are removed. Avoid touching face with fingers. SCBA is deposited on plastic sheets.
Station 7:	Field Wash	7.	Hands and face are thoroughly washed. Shower as soon as possible.

Sources: NIOSH, OSHA, USCG and EPA, October 1985.
U.S. EPA, November 1984.

STANDARD OPERATING PROCEDURE 1.12

AIR PARTICULATE SAMPLING WITH A REAL-TIME AEROSOL MONITOR

1. PURPOSE

To describe the equipment, operation, and procedures for collecting real-time air particulate data.

2. DISCUSSION

The Remedial Investigation Plan (RIP) provides information about the scope of specific operations and the applicability of this procedure to the activities.

2.1 Functions of RAMs

Airborne particulate contaminants can present a significant threat to the health and safety of workers. Real-time aerosol monitoring (RAM) instruments are used to determine the relative concentrations of airborne particulates that may cause a respiratory hazard. These instruments can determine concentrations of airborne particulates in dust, fumes, smoke, and fog. The real-time data obtained from these instruments are used to establish the level of protection for the health and safety of workers and assist in the establishment of possible control measures. The RAM is typically calibrated at the factory and recalibrated by the manufacturer at least annually.

The RAM uses a pulsed, gallium arsenide light-emitting diode source. The radiation scattered by airborne particles is sensed by a silicon-photovoltaic hybrid detector. The instrument continuously senses the combined scattering from the population of particles present within its sensing volume (approximately 1 cm^3) when dimensions are large in comparison to the average separation between the individual airborne particles. The scattering sensing parameters have been designed for preferential response to the range of particle size from 0.1 to 10 microns.

Most RAMs read in units of mg/m^3. In order to quantify the results, apply the appropriate guidelines, and establish action levels, it is necessary to have some knowledge of the sample composition and to determine what percent of the total dust seen is respirable. In some cases, it may be necessary to perform continuous air monitoring in conjunction with the RAM measurements to help identify contaminant characteristics. In terms of dust content, it can be assumed that 100% of the dust produced is silica if drilling through sandstone. In areas where the dust produced is from other sources, quantitative analysis must be performed to determine the exact content of the dust-producing media. The analysis should include the silica content, type of silicates (crystalline, amorphous, coal dust, and others), and a general background analysis of the soil. The results of the soil analyses are then used to establish guidelines for action levels during work activities that are based on the current Threshold Limit Values (TLVs).

2.2 Limitations of RAMs

A. RAMs are designed for qualitative analysis. For that reason, they can be used to provide only an indication of total particulate concentration unless samples of the medium of interest (like soil) are taken before the work begins and quantitatively analyzed for content.

B. Certain models (GCA Model PDM-3 MINIRAM, for example) satisfy the requirements for intrinsically safe operation in methane and air mixtures. Consult the manufacturer's operating manual for use of these instruments in unknown atmospheres when potentially combustible or flammable compounds may be present.

C. RAMs determine the concentrations of airborne particulates, but do not provide information about the hazardous or toxic nature of airborne particulates.

D. Over time, RAM performance may be affected by the slow buildup of dust in the sensor. Therefore, RAMs must be serviced and cleaned regularly.

E. RAMs respond preferentially to a physical particle size of 0.1 to 10 microns. Some fumes may contain particles smaller than this.

F. The particle size of 0.1 to 10 microns refers to the physical size, as opposed to the aerodynamic size. Different aerodynamic sizes may have different degrees of transportability and respirability.

3. PROCEDURE

3.1. Associated Procedures

Information that applies to most field activities is provided in SOPs 1.1-1.10. In addition to the RIP, those SOPs provide guidance that may supplement the information in this procedure. They should be consulted as necessary to obtain specific information about equipment and supplies; sample collection, preservation, packaging, and shipping; decontamination procedures; and documentation requirements. Procedures directly associated with this SOP are listed below.

SOP No.	SOP Title
1.1	General Instructions for Field Personnel
1.6	General Equipment Decontamination

3.2. Preparation

3.2.1. Office

A. Review the RIP and SOPs listed in Section 3.1.

B. Coordinate schedules/actions with the installation staff.

C. Obtain appropriate permission for property access.

D. Assemble the equipment and supplies listed in Appendix 5.1. The purpose of an office instrument checkout is to verify that an instrument will function properly, the batteries are serviceable, and the instrument can be zeroed and is ready for field use. Ensure the proper operation of the RAM according to instructions included in the operating manual, logbook, and the steps listed below.

1. Check the battery charge level. If in doubt, charge the battery as described in the operating manual.

2. Open the sensor chamber and visually examine the sensor. If cleaning is required, carefully follow the procedures contained in the operating manual.

   CAUTION: Do not touch the lens or the inside of the chamber.

3. Turn the unit on. Verify the operation of the instrument display and other controls according to the operating manual.

4. Perform the zero procedure described in the operating manual. This procedure must be performed in an area known to be free of dust.

   NOTE: The instruments are factory calibrated against a filter gravimetric reference using a standard test dust (Arizona road dust). If recalibration of the instrument is desired, consult the manufacturer's operating manual for the location of the factory that will perform the calibration.

5. If the RAM is not ready for use, initiate steps to have the malfunctions corrected, obtain a working replacement, and repeat the checkout procedures.

3.2.2. Documentation

A. Obtain a logbook from the QA officer.

B. Record all information related to the instrument checkout in the logbook. This information may include the date of the last factory calibration, the date the sensor was last cleaned, the date of replacing the battery pack, and any problems during the instrument checkout. Sign and date the logbook.

C. Obtain a sufficient number of the appropriate ER Program data collection forms (see INDEX TO SOPs).

D. Consult the ER Program data administrator for a current list of information management codes, location IDs, and sample numbers used in the completion of data forms.

E. Record the initial information on the Real-Time Aerosol Field Monitoring Data form (Appendix 5.2). See Appendix 5.3 for instructions to complete the form.

3.2.3. Field

A. Perform the instrument checkout procedures as described in Section 3.2.1.C.

B. Record the initial information on the Real-time Aerosol Field Monitoring Data form (Appendix 5.2). See Appendix 5.3 for completion of the data form.

3.3. Operation

3.3.1. Sampling

For accurate results, follow the instructions contained in the operating manual.

A. Position the instrument near the aerosol source and obtain readings.

B. Position the instrument in the worker's breathing zone and obtain readings according to operating instructions..

C. Record data on the Real-Time Aerosol Field Monitoring Data form (Appendix 5.2) by following the instructions in Appendix 5.3.

3.3.2. Interpretation of Results/Action Levels

A. Apply the results of the quantitative soil sample analyses to the mg/m^3 concentration obtained using the RAM. Consult the site Health and Safety Plan for the exact hazards and the action levels. Action levels are typically 50% of the threshold limit value (TLV).

B. Compare the applicable TLVs to these concentrations. If the estimated concentrations are greater than any of the applicable TLVs, the level of protection must be upgraded to include respiratory protection. Consult the site Health and Safety Plan for current TLVs of the known hazards and the proper respiratory protection. When quantitative contaminant results are not available, the TLV for an upgrade to respiratory protection specified by the site Health and Safety Plan is $10\ mg/m^3$ for total dust containing no asbestos and less than 1% crystalline silica.

Example: Analysis of the soil at a drilling site shows a mica content of 75%. Assuming that 50% of the dust is respirable, a RAM reading of $10\ mg/m^3$ would result in $3.75\ mg/m^3$ of mica being inhaled by the workers in that area ($0.50 \times 10 \times 0.75 = 3.75$). The TLV time-weighted average (TWA) for mica is a $3.0\ mg/m^3$, which is less than 3.75. Air purifying respirators with high-efficiency particulate filters would have to be employed.

C. Document all levels of protection in the logbook. Record the time spent in each level, the type of respirator in use, the persons involved, and the concentrations of contaminants.

3.4. Postoperation

3.4.1. Field

A. Turn all switches to the off position.

B. Decontaminate or clean the instrument. If decontamination is required, follow the procedures specified in SOP 1.6, General Equipment Decontamination. If cleaning is required, refer to the manufacturer's operating manual.

C. Charge the instrument batteries as specified in the instrument manual.

D. If necessary, make sure all survey or sampling locations are properly staked and the location ID is readily visible on the location stake.

3.4.2. Documentation

A. Record any uncompleted work (like additional monitoring) in the logbook.

B. Complete logbook entries, verify the accuracy of entries, and sign/initial all pages.

C. Review data collection forms for completeness.

3.4.3. Office

A. Deliver original forms and logbooks to the document control officer (with copies to the site manager and files) for eventual delivery to the Department of Energy.

B. Replace expendable items. Return the RAM to the equipment manager and identify any operational problems from previous use.

4. SOURCE

GCA/Environmental Instruments. n.d. "Instruction Manual for Model PDM-3 Miniature Real-Time Aerosol Monitor (Miniram)." GCA/Environmental Instruments publication. Bedford, Massachusetts: MIE Incorporated.

5. APPENDIXES

5.1. Equipment and Supplies Checklist

5.2. Real-Time Aerosol Field Monitoring Data Form

5.3. Data Form Completion

APPENDIX 5.1

REAL-TIME AEROSOL MONITOR EQUIPMENT AND SUPPLIES CHECKLIST

_____ RAM

_____ Operating manual

_____ Battery charger

_____ Spare battery pack

_____ Jeweler's screwdriver

_____ Current ACGIH TLV indices

APPENDIX 5.2

REAL-TIME AEROSOL FIELD MONITORING DATA FORM

REAL – TIME AEROSOL FIELD MONITORING DATA

FACILITY CODE _____ LOG DATE _____

LOGGER CODE _____ FIELD REP _____

MANUFACTURER _____

MODEL NO _____ SERIAL NO _____

DATE CALIBRATED _____ ACCEPTANCE CODE _____

FIELD MEASUREMENTS

LOCATION ID OR DESCRIPTION	TIME (HH:MM)	SAMPLE TYPE	ACTIVITY TYPE	CONCENTRATION (mg/m^3)	COMMENTS

ACCEPTANCE CODES: A–ACCEPTABLE M–MARGINALLY ACCEPTABLE R–RECONNAISSANCE U–UNACCEPTABLE N–NOT DETERMINED

SAMPLE TYPES :
A – AREA G – GRAB P – PERSONAL T – TIME WEIGHTED AVERAGE O – OTHER (SPECIFY)

ACTIVITY TYPES:
AM – AMBIENT (BACKGROUND) TR – TRENCHING OPERATION CS – CONFINED SPACE
DR – DRILLING OPERATION SS – SURFACE SOIL SAMPLING OT – OTHER (SPECIFY)

COMPLETE BOLDED DATA FOR ENTRY INTO TIME
ACR–043 (3/88)

FORM COMPLETED BY/DATE _____ TECHNICAL REVIEWER/DATE _____

APPENDIX 5.3

DATA FORM COMPLETION

Use a pen with black ink that is not water soluble (not a felt-tip pen). Make an entry in each blank. Where there is no data entry, enter UNK for Unknown, NA for Not Applicable, or ND for Not Done. If any procedure was not performed as prescribed, give the reason for the change or omission on the form. To change an entry, draw a single line through it, add the correct information above it, and initial the change.

REAL-TIME AEROSOL FIELD MONITORING DATA FORM

1. Facility Code. Five-character code abbreviating the facility name where program activity is being conducted. The first three characters indicate the facility, and the remaining two numbers designate the specific site within the facility.

2. Log Date. The date that information recorded on the form was obtained in the format DD-MMM-YY (01-JAN-88).

3. Logger Code. Three-character or four-character code identifying the company responsible for collecting the information recorded on the form.

4. Field Rep. The name of the field representative.

5. Manufacturer. The name of the company that manufactures the real-time aerosol monitor (RAM) instrument being used.

6. Model No. The model number of the RAM.

7. Serial No. The serial number of the RAM.

8. Date Calibrated. The date when the RAM was calibrated. This data field follows the same format as the data field for log date.

9. Acceptance Code. One-character code assigned by the site manager.

10. Location ID or Description. Four-character code assigned sequentially to each borehole, test pit, or surface location where physical, chemical, biological, radiological, and other measurements are taken.

11. Time (HH:MM). The time when a RAM reading was taken using the 24-hr clock in the format of hours:minutes (for example, 08:37 for 8:37 AM and 19:12 for 7:12 PM).

12. Sample Type. The type of sample taken by the RAM.

    T - Time-weighted average (TWA)
    G - Grab sample
    A - Area sample
    P - Personal sample
    O - Other (specify)

13. Activity Type. A two-character code describing the mode of investigation that is being monitored. Acceptable codes are included at the bottom of the field form.

14. Concentration (mg/m^3). The units in which the RAM reads. Unless otherwise specified in the RIP, the units mg/m^3 will be used.

15. Comments. Any additional information.

STANDARD OPERATING PROCEDURE 2.1

PRESAMPLE PURGING OF WELLS

1. PURPOSE

To identify well-purging procedures for evacuation of stagnant water from the well bore and its replacement by groundwater in sufficient quantities so that a water sample representative of the formation of completion can be collected.

2. DISCUSSION

The choice of procedure and equipment for well evacuation depends on the Remedial Investigation Plan (RIP), the yield of the well, water depth, well size, and the type of water analysis. This procedure describes various methods for well evacuation. Collection and measurement of samples and the documentation of data should be performed as described in the associated procedures.

Peristaltic Pump

Using a peristaltic pump for well evacuation is particularly advantageous because the same system may be used for sample collection. In addition, the flow rate is easily controlled with a peristaltic pump. The pump can be used in wells of any diameter and nonplumb wells, and the pump is highly portable and readily available. However, peristaltic pumps can only be used in wells with a potentiometric level less than 25 ft below the land surface. Additionally, low pumping rates make it difficult to evacuate the wellbore in a reasonable amount of time. An electric power source is required, and there is a high likelihood of stripping the volatiles.

Bladder Pump

The bladder pump (Middelburg type or diaphragm) is a particularly good choice when the well depth is beyond the capability of the peristaltic pump. In addition, the relatively high pumping rate allows rapid well evacuation. Bladder pumps are portable, though the accessory equipment may be cumbersome. With deep purging, large volumes of gas and longer cycles are required. Operating time and expense are increased as a result.

Bailer

For shallow, small-diameter wells with low yields, evacuation of the well by bailer is recommended. Bailers are mechanically simple, lightweight and highly portable, constructed in many sizes, and require no external power source. Bailers are easily operated and cleaned and inexpensive. The primary disadvantage of bailers is their limited-volume purging capability, especially in deep wells where purging is labor and time consuming. Another disadvantage is that sampling personnel are directly exposed to contaminants.

Electric Submersible Pump

The submersible pump is commonly used for purging deep, large-diameter wells requiring high pumping rates. The pump is portable and self-contained except when auxiliary power sources are employed. The primary disadvantage is that the pump can be difficult to decontaminate and transport. Other disadvantages are damage caused by dry pumping, damage to the gears (when the water contains high levels of suspended soils), and the high cost of these large-capacity pumps.

Reciprocating Piston Submersible Pumps

The reciprocating piston submersible pump is a portable system for purging wells with water depths up to 500 ft. These pumps develop high pumping rates and can be operated in 2-inch-diameter wells. The system is operated by compressed gas (air or nitrogen) and driven by an air motor. The pump is self-priming, and the gas that drives the pump does not contact the purged water. The pump is constructed from stainless steel and can be decontaminated easily.

3. PROCEDURES

3.1. Associated Procedures

Before every operation, a review of the SOPs 1.1-1.10 is necessary. These SOPs contain information on the performance of field activities. They should be consulted for specific information about equipment and supplies; sample collection, preservation, packaging, and shipping; decontamination procedures; and documentation requirements. Procedures directly associated with this SOP are listed below.

SOP No.	SOP Title
1.1	General Instructions for Field Personnel
1.6	General Equipment Decontamination
2.2	Field Measurements on Ground and Surface Water Samples
2.3	Sampling Monitoring Wells with a Bladder Pump
2.4	Sampling Monitoring Wells with a Bucket-Type Bailer
2.5	Sampling Monitoring Wells with a Submersible Pump
2.6	Sampling Monitoring Wells with a Peristaltic Pump
3.1	Water Level Measurement
6.1	Health and Safety Monitoring of Combustible Gas Levels
6.2	Health and Safety Monitoring of Organic Vapors with a Photoionization Detector
6.3	Health and Safety Monitoring of Organic Vapors with a Flame Ionization Detector

3.2. Preparation

3.2.1. Office

A. Review the RIP and SOPs listed in Section 3.1.

B. Coordinate schedules/actions with the installation staff.

C. Obtain appropriate permission for property access.

D. Assemble the equipment and supplies listed in Appendix 5.1. Ensure the proper operation of all sampling equipment.

E. Have the site manager order the standard solutions for specific conductance and pH/alkalinity calibrations to be performed either before departing for the site or upon arrival at the site.

F. Consult with the site manager about purging techniques and the disposal of purged water and other sampling expendables.

G. Make arrangements to buy or lease an air compressor or bottled nitrogen.

3.2.2. Documentation

A. Obtain a logbook from the QA officer.

B. Record results of the equipment check in the logbook.

C. Obtain a sufficient number of the appropriate ER Program data collection forms (see INDEX TO SOPs).

D. Consult the ER Program data administrator for a current list of information management codes, location IDs, and sample numbers used in the completion of data forms.

3.2.3. Field

A. Locate the monitoring wells to be sampled and the appropriate decontamination area. Locate the staging area and areas for managing purged water and expendable sampling materials. Check decontamination zones and barricades to public access. Plan to purge the wells, moving from the least contaminated to most contaminated.

B. Decontaminate the purging pump or bailer before taking the first sample and between sampling intervals (see SOP 1.6, General Equipment Decontamination, and the RIP).

3.3. Operation

A. Record all calculations and field measurements according to SOP 2.2, Field Measurements on Ground and Surface Water Samples.

B. Calculate the amount of water in the well (casing or bore volume) with the formula shown below.

$$(pi) \times \frac{(d^2)}{4} \times (h_1 - h_2) \times 7.48 = \text{gallons per bore volume}$$

where

pi	=	3.1416
d	=	inner diameter of well bore (ft)
h_1	=	depth of well from top of well casing (ft)
h_2	=	depth to water from top of casing (determined in field) (ft)
bore volume	=	volume of water equivalent to the standing water in a well

3.3.1. Peristaltic (Suction-Lift) Pump

The peristaltic pump is a self-priming, low-volume pump consisting of a rotor and ball-bearing rollers. Tubing inserted around the pump rotor is squeezed by the rollers as the rotor revolves. One end of the precleaned tubing is placed into the well while the other end is connected to a flow-through bath. As the rotor revolves, water is drawn (up to one gallon per minute) from the well.

For purging with a peristaltic pump, proceed as described below.

1. Using clean equipment, determine the total depth of the well and water level with an electric sounder or steel tape (see SOP 3.1, Water Level Measurement). Calculate the fluid volume in the casing, using the casing volume or the bore volume (the RIP may require considering the latter).

2. Determine the depth from the casing top to the midpoint of the screen or well section open to aquifer. Consult the well completion and water level measurement records or sound for the bottom.

3. If depth to midpoint of screen exceeds 25 ft, choose an alternate system.

4. Lower intake into the well a short distance below the water level and begin water removal. Collect or dispose of the purged water in containers of the type specified in the RIP. Lower suction intake to maintain submergence and allow for successive purging of the water column.

5. Monitor the air above the wellhead (as specified in SOP 6.1, Health and Safety Monitoring of Combustible Gas Levels; SOP 6.2, Health and Safety Monitoring of Organic Vapors with a Photoionization Detector; and SOP 6.3, Health and Safety Monitoring of Organic Vapors with a Flame Ionization Detector) to determine the potential for explosion, fire, and any toxic effect on workers.

6. Record the amount of water purged and discharge rates. A calibrated bucket and stopwatch are most commonly used to obtain this measurement.

7. Purge a minimum of three casing volumes and continue purging until the discharge parameters (pH, temperature, and specific conductance) stabilize.

8. After pumping, monitor the water level recovery. The recovery rate may be useful in determining the sample rate.

9. Decontaminate the tubing and fittings according to SOP 1.6, General Equipment Decontamination.

3.3.2. Bladder (Gas-Operated, Squeeze-Type) Pump

Bladder pumps consist of a membrane enclosed in stainless steel housing. Water enters the membrane through a lower check valve; compressed gas is injected into the cavity between the housing and bladder. Water is transported through an upper check valve and into a discharge line. The process is repeated to cycle the water to the surface and into the flow-through bath.

For purging with a bladder pump, proceed as described below.

1. Using decontaminated equipment, determine the total depth of the well and the water level with an electronic level indicator (see SOP 3.1, Water Level Measurement). Then calculate the fluid volume in the well casing (either casing or bore volume).

2. Determine the depth from the casing top to the midpoint of the screen or well section open to aquifer (consult well completion and water level measurement records). If two or more screen sections are present, determine at which section to set intake and note in logbook.

3. Lower pump assembly into the well until the pump is near the middle of the screened interval.

4. Attach compressed gas and discharge lines. Adjust cycle.

5. Begin water removal; collect or dispose of the purged water in containers of the type specified in the RIP.

6. Monitor the air above the wellhead according to the RIP to determine the potential for fire, explosion, and any toxic effect on workers.

7. Measure the rate of discharge frequently (every two gallons). A calibrated bucket and stopwatch are commonly used to obtain this measurement.

8. Purge a minimum of three casing volumes and continue purging until the discharge parameters (pH, temperature, and specific conductance) stabilize.

9. After pumping, monitor the water level recovery. The recovery rate may be useful in determining the sample rate.

10. Decontaminate the pump assembly (see SOP 1.6, General Equipment Decontamination).

3.3.3. Bailer

Water is removed from the bore by a vessel of known volume. The vessel fills with water, and the unit is retrieved with a line or rope.

For purging with a bailer, proceed as described below.

1. Using decontaminated equipment, determine the total depth of the well and the water level with an electric sounder or steel tape (see SOP 3.1, Water Level Measurement). Then calculate the fluid volume in the well casing (either casing or bore volume). If considering the amount of water in the well casing and the filter pack is required, consult the RIP for the appropriate calculations.

2. Lower the bailer into the well and begin water removal. Collect or dispose of purged water in containers of the type specified in the RIP.

3. The air above the wellhead must be monitored (as specified by SOP 6.1, Health and Safety Monitoring of Combustible Gas Levels; SOP 6.2, Health and Safety Monitoring of Organic Vapors with a Photoionization Detector; and SOP 6.3, Health and Safety Monitoring of Organic Vapors with a Flame Ionization Detector) to determine the potential for explosion, fire, and any toxic effect on workers.

4. Record the amount of water purged and discharge rates frequently (every two gallons). A calibrated bucket and stopwatch are commonly used to obtain this measurement.

5. Purge a minimum of three casing volumes and continue purging until the discharge parameters (pH, temperature, and specific conductance) stabilize.

6. Once the well has been bailed, monitor the water level recovery. The recovery rate may be useful in determining the sampling rate.

7. Decontaminate the bailer (see SOP 1.6, General Equipment Decontamination).

3.3.4. Electric and Reciprocating Piston Submersible Pumps

The pump assembly is suspended from the discharge tubing and submerged in the well. Water is transported through the discharge tube to the surface by centrifugal or piston action. A portable generator (or battery) is used to provide a power source for the electric pump and a winch in some cases. A portable air compressor is used to drive the piston-type pump.

For purging with a submersible pump, proceed as described below.

1. Purge the well as prescribed in steps 1-3 and 5-9 in method 3.3.1.

2. Decontaminate the pump assembly (see SOP 1.6, General Equipment Decontamination).

3.4. Postoperation

3.4.1. Field

A. Ensure that all equipment is accounted for, decontaminated (see SOP 1.6, General Equipment Decontamination), and ready for shipment.

B. Restore the site to the presampling conditions specified in the RIP.

3.4.2. Documentation

A. Record cleanup procedures and any uncompleted work (like site restoration or incomplete purging) in the logbook.

B. Complete logbook entries, verify the accuracy of entries, and sign/initial all pages.

C. Review data collection forms for completeness.

3.4.3. Office

A. Deliver original forms and logbooks to the site manager for technical review. He/she will review, sign forms, and transmit to the document control officer (copies to the files) for eventual delivery to the Department of Energy.

B. Inventory equipment and supplies. Repair or replace all broken or damaged equipment. Replace expendable items. Return equipment to equipment manager and report incidents of malfunction or damage.

4. SOURCES

Barcelona, M. J., J. P. Gibb, J. A. Helfrich, and E. E. Garske. 1985. "Practical Guide to Groundwater Sampling." U.S. Environmental Protection Agency report EPA/600/2-85/104. Washington, D.C.: U.S. Government Printing Office.

Korte, N., and P. Kearl. 1984. "Procedures for the Collection and Preservation of Groundwater and Surface Water Samples and for the Installation of Monitoring Wells." U.S. Department of Energy, Grand Junction, Colorado.

Morrison, R.D. 1983. "Ground Water Monitoring Technology, Procedures, Equipment and Applications." TIMCO Manufacturing, Inc., 85-90, Evanston, Illinois.

5. APPENDIX

5.1. Equipment and Supplies Checklist

APPENDIX 5.1

EQUIPMENT AND SUPPLIES CHECKLIST

_____ Purging pump or bailer

_____ Water level sounding device

_____ Calculator

_____ Conductivity meter

_____ pH meter

_____ Digital titration kit

_____ Calibration solutions

_____ Air compressor or bottled nitrogen (as needed)

STANDARD OPERATING PROCEDURE 2.2

FIELD MEASUREMENTS ON GROUND AND SURFACE WATER SAMPLES

1. PURPOSE

To obtain reliable and accurate measurements of the field chemistry of water quality samples.

2. DISCUSSION

For several reasons, taking measurements of water chemistry in the field is preferable to taking measurements in the laboratory. If it is suspected that a particular sample is not representative or valid, resampling and reanalyzing can be immediately performed at the site. In addition, the values of pH, specific conductance, and alkalinity in water chemistry measurements in the field may differ from those in the laboratory. Disadvantages encountered in obtaining field measurements usually relate to the reliability of the particular method and equipment used for the test.

The Remedial Investigation Plan (RIP) contains specific details about the procedures and equipment for this SOP. Refer to the RIP for the type of samples to be collected. Collection and measurement of samples and the documentation of data will be performed as described in the associated procedures.

3. PROCEDURES

3.1. Associated Procedures

Before every operation, a review of the SOPs 1.1-1.10 is necessary. These SOPs contain information on the performance of field activities. They should be consulted for specific information about equipment and supplies; sample collection, preservation, packaging, and shipping; decontamination procedures; and documentation requirements. Procedures directly associated with this SOP are listed below.

SOP No.	SOP Title
1.1	General Instructions for Field Personnel
1.6	General Equipment Decontamination
2.1	Presample Purging of Wells
2.3	Sampling Monitoring Wells with a Bladder Pump
2.4	Sampling Monitoring Wells with a Bucket-Type Bailer
2.5	Sampling Monitoring Wells with a Submersible Pump
2.6	Sampling Monitoring Wells with a Peristaltic Pump
2.8	Sampling for Volatile Organics

SOP No.	SOP Title
2.9	Surface Water Sampling
3.1	Water Level Measurement
4.3	Monitoring Well Installation

3.2. Preparation

3.2.1. Office

A. Review the RIP and SOPs listed in Section 3.1.

B. Coordinate schedules/actions with the installation staff.

C. Obtain appropriate permission for property access.

D. Assemble the equipment and supplies listed in Appendix 5.1. Ensure the proper operation of all sampling equipment. Ensure that there are sufficient quantities of reagents, solutions, and filters.

E. Notify the analytical laboratory of sample types, the number of samples, and the approximate arrival date.

F. Contact the carrier that will transport samples to obtain information on regulations and specifications.

G. Consult the site manager about purging techniques, the disposal of purged water and other sampling expendables, and the purchase of standard solutions for electrical conductivity and pH/alkalinity calibrations.

3.2.2. Documentation

A. Obtain a logbook from the QA officer.

B. Record results of the equipment check in the logbook.

C. Obtain a sufficient number of the appropriate ER Program data collection forms (see INDEX TO SOPs).

D. Consult the ER Program data administrator for a current list of information management codes, location IDs, and sample numbers used in the completion of data forms.

3.2.3. Field

A. Locate the monitoring wells to be sampled and the appropriate decontamination area. Locate the staging area and areas for managing purged water and expendable sampling materials. Check decontamination zones and barricades to public access. Plan to purge and sample the wells, moving from the least contaminated well to the well with the highest level of contamination.

B. Assemble the appropriate sampling equipment (tubing, flow-through bath, water quality meters, and other equipment). Check the condition of all supplies and the operation of the equipment.

C. Decontaminate all sampling equipment before taking the first sample and between sampling intervals (see SOP 1.6, General Equipment Decontamination, and the RIP). Rinse pH and conductivity probes with distilled water between measurements. Collect all decontamination solutions and rinsate liquids in a container, drum, or lined pit and dispose of them at the conclusion of the sampling event. If data exist that show that the decontamination and rinsate liquids will not contribute to contamination at the site, they may be disposed of at the site. Rinsate liquids can be disposed of at the wellsite as long as the disposal area is at least 10 ft from the nearest well.

D. Perform field calibrations for electrical conductivity and pH instrumentation.

3.3. Operation

Procedures for measuring the parameters are discussed below. When practical, take final field measurements after at least three bore volumes have been pumped from the well and as close to the time of sampling as possible. Record measurements, instrument readings, calibration runs, and alkalinity determinations on the appropriate forms included in Appendixes 5.2 through 5.5. Complete the forms as described in Appendix 5.6.

3.3.1. Determining pH

A. Connect the probe to the meter and immerse it in the flow-through bath after pumping has begun. A flow-through bath is an enclosed container made of inert material that houses the pH probe and calibration buffer solutions. The bath allows the buffer solutions to reach the same temperature as the water being withdrawn, and this results in the proper calibration/standardization of the pH meter. The flow-through bath will reduce or eliminate drift.

B. Bring the standard solutions to the temperature of the water in the flow-through bath. If the meter has a temperature adjustment, set it to the temperature of the water.

C. Rinse the probe in distilled water and pat completely dry with a clean tissue before putting it in a calibrating solution. Avoid rubbing the probe, which may cause a static charge that will disrupt measurements.

D. Standardize the meter immediately before taking the measurement. The calibrating solutions must bracket the sample--either pH 7.0 and pH 4.0 or pH 7.0 and pH 10.0. Use the procedure described below to standardize the meter.

1. Put the probe in the pH 7.0 (or in the pH 4.0 solution if the pH is less than 4.0) and adjust the standardization knob to achieve a reading of 7.0 (or 4.0 for pH less than 4.0).

2. Put the probe in the other solution and adjust the standardization knob to achieve a reading of 4.0 or 10.0, as appropriate.

3. Repeat those two steps until adjustment is no longer required.

E. Clean the probe with distilled water and clean tissues.

F. Put the probe in the flow-through bath. Record the measurement within 5 min or after drift has ceased, whichever is sooner.

G. Immediately rinse and dry the probe and put it in each calibrating solution for about 30 sec. Record the readings.

NOTE: During storage and between measurements, keep the probe immersed in the pH 4.0 solution.

H. Keep hoses leading to the flow-through bath out of direct sunlight because the water can heat up quickly at low discharge rates.

3.3.2. Measuring Temperature

A. Use a Celsius thermometer to measure the temperature in a small Teflon or plastic bucket. Record measurements in the logbook periodically during pumping.

B. Place the bucket close to the wellhead. Keep the bucket and discharge hose away from direct sunlight.

3.3.3. Measuring Electrical Conductivity

A. Use three KCl solutions of known concentrations; these concentrations must bracket the expected electrical conductivity (Ec) of water samples collected in the field. Record the electrical conductivity of the known solutions after the meter probes have been submersed and equilibrated in them. The temperature of the known solutions must be 25°C and recorded from a laboratory-grade thermometer.

B. Cool one KCl known solution to 0°C. Then record electrical conductivity measurements as the temperature of the KCl solution is warmed to 25°C. During this calibration procedure, also record the temperature scale of the Ec meter to confirm the accuracy of the Ec meter thermometer to the known accuracy of the laboratory-grade thermometer.

C. Calibrate the conductivity meter with at least three standard KCl solutions, the extremes of which bracket the anticipated conductivity of the samples. Perform this calibration at least before and after sampling. Keep a record of each calibration and record the temperature of each calibrating solution.

D. Clean the probe and cable with distilled water and clean tissues.

E. Measure conductivity in a Teflon or plastic bottle. Record conductivity periodically (after every two gallons) throughout the time of pumping. Record the position of each setting on the meter.

NOTE: Rinse the probe in distilled water and dry it completely before putting it in a calibration solution.

F. Keep the probe at least two inches away from the cell walls or bucket because most conductivity probes produce an electrical field that may be disturbed if the probe is near a solid object.

3.3.4. Alkalinity Testing

Use a digital titration kit (Hach Kit) to test for alkalinity. Field techniques can be tested by performing alkalinity tests on known solutions prepared by the quality control laboratory. When using the standard solutions, record only the value of alkalinity at a pH of 4.5 on the Standard Alkalinity Record form (Appendix 5.5). The alkalinity of three standard solutions will be determined in triplicate. Perform these tests at the start of field sampling. Report the results to the site manager for confirmation with the known values reported by the laboratory. At the discretion of the site manager, additional standard alkalinity tests may be performed periodically during or after the field sampling period.

Determine the alkalinity of each water sample at the time that the sample is collected; record the results in the appropriate sections of the Groundwater Quality Sampling Record (Appendix 5.3) or Surface Water Quality Sampling Record (Appendix 5.2). Enter alkalinity values for 13 different pH values into the table on the forms and plot the results on the graph. Perform a minimum of two tests on each sample to verify the reproducibility of the values obtained. If possible, have different field personnel run these two tests. If the calculated error is greater than 10%, perform a third test for a redetermination of the error. Three trials are usually sufficient to determine a reasonable field value. At the conclusion of the titration tests, record the pH meter readings in the pH 4.0 and 7.0 buffer solutions. The procedure used to determine alkalinity values is described below.

A. Bring the temperature of the pH 4.0 and 7.0 standard buffer solutions to the temperature of the sample in the flow-through bath. Standardize the meter with the electrode in each of these buffers according to the accepted method. Leave the electrode in the pH 4.0 buffer solution.

B. Rinse the titration flask and the volumetric flask with distilled water, followed by raw sample. Remove droplets of water by vigorous shaking.

C. Measure 100 ml of fresh, unfiltered sample in the volumetric flask and pour it into the titration flask with as little agitation as possible.

D. Rinse the pH electrode, pat it dry, and put it into the titration flask.

E. Record the titrant lot number and date on the water quality data form. Eject a few drops of titrant from the tip of the titrator and wipe the tips with a clean tissue. Reset the counter to 0000.

F. Titrate the solution with acid, gently stirring the solution to ensure mixing. Whenever feasible, use magnetic stirrers. Record pairs of pH and alkalinity readings for the pH values on the data form(s).

G. Rinse all glassware with distilled water.

3.4. Postoperation

3.4.1. Field

A. Ensure that all equipment is accounted for, decontaminated (see SOP 1.6, General Equipment Decontamination), and ready for shipment.

B. Restore the site to the presampling conditions and fill open sampling holes as specified in the RIP.

C. Make sure all survey or sampling locations are properly staked and the location ID is readily visible on the location stake.

D. Examine electrical conductivity and temperature calibrations (red line location). Adjust data as indicated.

E. Prepare samples and transport according to SOP 1.3, Sample Control and Documentation; SOP 1.4, Sample Containers and Preservation; and SOP 1.5, Guide to Handling, Packaging, and Shipping of Samples.

3.4.2. Documentation

A. Record cleanup and hole abandonment procedures and any uncompleted work (like site restoration) in the logbook.

B. Record the sampling and operating data in the logbook.

C. Complete logbook entries, verify the accuracy of entries, and sign/initial all pages.

D. Make any necessary changes on data forms after examining electrical conductivity and temperature calibrations.

E. Review data collection forms for completeness.

3.4.3. Office

A. Deliver original forms and logbooks to the site manager for technical review. He/she will review, sign forms, and transmit to the document control officer (copies to the files) for eventual delivery to the Department of Energy.

B. Inventory equipment and supplies. Repair or replace all broken or damaged equipment. Replace expendable items. Return equipment to the equipment manager and report incidents of malfunction or damage.

C. Contact the analytical laboratory to ensure that samples arrived safely and instructions for sample analyses are clearly understood.

4. SOURCES

EPA. 1979. "Methods for Chemical Analysis of Water and Wastes." U.S. Environmental Protection Agency document EPA/600/4-79-020. Washington, D.C.: U.S. Government Printing Office.

Korte, N., and P. Kearl. 1984. "Procedures for the Collection and Preservation of Groundwater and Surface Water Samples and for the Installation of Monitoring Wells." U.S. Department of Energy, Grand Junction, Colorado.

5. APPENDIXES

5.1. Equipment and Supplies Checklist

5.2. Surface Water Quality Sampling Record

5.3. Groundwater Quality Sampling Record

5.4. Standard Electrical Conductivity Data Form

5.5. Standard Alkalinity Test Record

5.6. Data Form Completion

APPENDIX 5.1

EQUIPMENT AND SUPPLIES CHECKLIST

Complete all blanks before going to the field.

_____ Reagents: Alkalinity kit

- _____ Check reagent volumes
- _____ Check glass for breakage

_____ pH meter(s) (circle one)

- _____ Electrode full of fluid
- _____ Electrode glass intact
- _____ Immerse electrode in tap water
- _____ Calibrate electrode, rinse, fill, and replace cap
- _____ Temperature probe in tap water
- _____ Temperature probe in hot water

_____ Ec Meter

- _____ Battery: Ok___ Dead___
- _____ Tap water: Ok___ Faulty___
- _____ Against calibration solution
- _____ Solution temp
- _____ Conductivity of solution

_____ Hand-held thermometer

- _____ Temperature in ice water
- _____ Temperature agrees with lab thermometer

_____ KCl solutions

_____ Filters and tubing

_____ Flow-through bath

APPENDIX 5.1, Continued

EQUIPMENT AND SUPPLIES CHECKLIST

_____ Teflon or plastic bucket

_____ Teflon or plastic bottle

_____ Titration flask

_____ Volumetric flask

APPENDIX 5.2

SURFACE WATER QUALITY SAMPLING RECORD

SURFACE WATER QUALITY SAMPLING RECORD

PAGE ____ OF ____

FACILITY CODE _____

LOCATION ID _____ LOT CONTROL NO _____

SAMPLE ID _____ SAMPLE TYPE _____

LOG DATE _____ ACCEPTANCE CODE _____

ANALYTICAL LAB CODE _____ LOGGER CODE _____

SAMPLING PERIOD: START _____ COMPLETE _____

SAMPLING METHOD _____ DATE SENT _____

COMMENTS _____

PARAMETER MEASUREMENTS:

POTENTIAL OF HYDROGEN	pH	S.U.	_____
SPECIFIC CONDUCTANCE	Ec	umhos/cm	_____
REDOX POTENTIAL	Eh	mvolts	_____
TEMPERATURE	TMP	°C	_____
ALKALINITY ($CaCO_3$)	ALK	mg/l	_____
DISSOLVED OXYGEN	DO	mg/l	_____

ACCEPTANCE CODES: A–ACCEPTABLE R–RECONNAISSANCE U–UNACCEPTABLE N–NOT DETERMINED

SAMPLE TYPES:

F – FIELD R – REPLICATE
K – KNOWN A – ACID BLANK

SAMPLING METHODS:

G – GRAB SP – SUBMERSIBLE PUMP
PP – PERISTALIC PUMP O – OTHER (SPECIFY)

COMPLETE BOLDED DATA FOR ENTRY INTO TIMS
WQD–007 (1/88)

FORM COMPLETED BY/DATE _____ TECHNICAL REVIEWER/DATE _____

SURFACE WATER QUALITY SAMPLING RECORD

FACILITY CODE _____ PAGE ____ OF ____

LOCATION ID _____ **LOG DATE** _____

SAMPLING INFORMATION

WITHDRAWAL METHOD _____

FILTER SIZE _____

THERMOMETER ID _____

Ec METER ID _____

pH METER ID _____

PUMP ID _____

ALKALINITY KIT ID _____

FIELD REP _____

INSTRUMENT(S) USED _____

_____

CALIBRATION INFORMATION

DATE/TIME OF LAST Ec CALIBRATION _____

TIME OF pH CALIBRATION _____

FOR STANDARD SOLUTION pH 7, INSTRUMENT READING _____

FOR STANDARD SOLUTION pH 4, INSTRUMENT READING _____

FOR STANDARD SOLUTION pH 10, INSTRUMENT READING _____

Eh OF CALIBRATION SOLUTION _____

Eh READING IN CALIBRATION SOLUTION AFTER INSTRUMENT MEASUREMENT _____

TEMP. OF CALIBRATION SOLUTION (°C) _____

SHIPPING INFORMATION

LAB(S) SHIPPED TO: _____ _____ _____

DATE(S) SHIPPED: _____ _____ _____

METHOD OF SHIPMENT: _____ _____ _____

COMMENTS _____

_____

COMPLETE BOLDED DATA FOR ENTRY INTO TMS
WQD—007 (1/88)

_____ FORM COMPLETED BY/DATE

_____ TECHNICAL REVIEWER/DATE

SURFACE WATER QUALITY SAMPLING RECORD

PAGE ____ OF ____

FACILITY CODE _____

LOCATION ID _____

LOG DATE _____

ERROR AT 4.50: $\left| \frac{X1 - X2}{X5} \right| \times 100 =$ ____%

1st = ____%

2nd = ____%

pH CHECK AFTER TITRATION

7.00 = _____

4.00 = _____

pH	ALKALINITY (mg/l Ca CO_3)		
	1st	2nd	3rd
8.90			
8.60			
8.30			
8.05			
7.80			
7.50			
6.50			
5.70			
5.10			
4.80			
4.50			
4.25			
4.00			

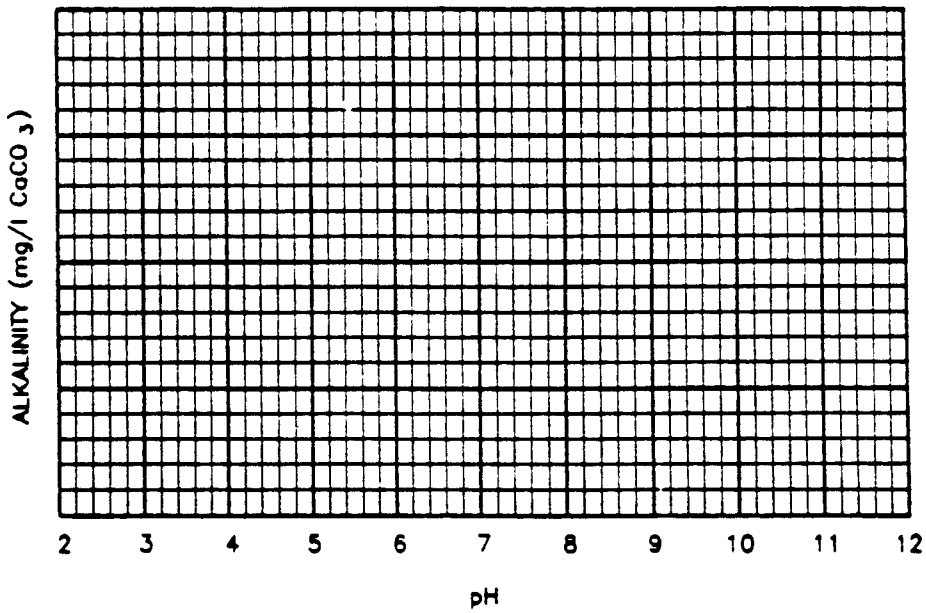

COMPLETE BOLDED DATA FOR ENTRY INTO TMS
WQO-007 (3/88)

SURFACE WATER QUALITY SAMPLING RECORD

FACILITY CODE _____ PAGE ____ OF ____

LOCATION ID _____ LOG DATE _____

SAMPLE ID	TEST KIT ID	pH (S.U.)	ALKALINITY (mg/l $CaCO_3$)		UNCERTAINTY (%)
			TRUE VALUE	FIELD VALUE	

COMMENTS _____

ACCEPTANCE CODES: A–ACCEPTABLE R–RECONNAISSANCE U–UNACCEPTABLE N–NOT DETERMINED

COMPLETE BOLDED DATA FOR ENTRY INTO TIMS
WQD–007 (3/88)

APPENDIX 5.3

GROUNDWATER QUALITY SAMPLING RECORD

GROUNDWATER QUALITY SAMPLING RECORD

PAGE ___ OF ___

FACILITY CODE _____ **LOT CONTROL NO** _____

LOCATION ID _____ **SAMPLE TYPE** _____

SAMPLE ID _____ **ACCEPTANCE CODE** _____

LOG DATE _____ **LOGGER CODE** _____

ANALYTICAL LAB CODE _____

INITIAL GROUNDWATER DEPTH (FT) _____ SAMPLE DEPTH (FT) _____

SAMPLING PERIOD: START _____ COMPLETE _____

SAMPLING METHOD _____ DATE SENT _____

COMMENTS _____

FINAL PARAMETER MEASUREMENTS:

POTENTIAL OF HYDROGEN	pH	S.U.	_____
SPECIFIC CONDUCTANCE	Ec	umhos/cm	_____
REDOX POTENTIAL	Eh	mvolts	_____
TEMPERATURE	TMP	°C	_____
ALKALINITY ($CaCO_3$)	ALK	mg/l	_____
DISSOLVED OXYGEN	DO	mg/l	_____

TIME	TOTAL VOLUME WITHDRAWN		pH	Ec (umhos/cm)	TEMP (°C)	COMMENTS
	(GALS)	(Bore Volume)				
	0.0	0.0	--	--	--	START PUMPING

ACCEPTANCE CODES: A–ACCEPTABLE R–RECONNAISSANCE U–UNACCEPTABLE N–NOT DETERMINED

SAMPLE TYPES:

F – FIELD R – REPLICATE
K – KNOWN A – ACID BLANK

SAMPLING METHODS:

G – GRAB SL – SUCTION LIFT PUMP BP – BLADDER PUMP
B – BAILER SP – SUBMERSIBLE PUMP O – OTHER (SPECIFY)
PP – PERISTALIC PUMP AL – AIR–LIFT SAMPLER

COMPLETE BOLDED DATA FOR ENTRY INTO TIMS

WQD–008 (1/88)

_____ FORM COMPLETED BY/DATE

_____ TECHNICAL REVIEWER/DATE

GROUNDWATER QUALITY SAMPLING RECORD

PAGE __ OF __

FACILITY CODE _____

LOCATION ID _____ LOG DATE _____

TIME	TOTAL VOLUME WITHDRAWN		pH	Ec (umhos/cm)	TEMP (°C)	COMMENTS
	(GALS)	(Bore Volume)				

COMPLETE BOLDED DATA FOR ENTRY INTO TMS

WQD-008 (1/88)

GROUNDWATER QUALITY SAMPLING RECORD

PAGE ___ OF ___

FACILITY CODE _____

LOCATION ID _____ LOG DATE _____

BORE VOL CALCULATION (GAL)

$$\frac{d^2\pi}{4}(h_1 - h_2) \times 7.48$$

DEPTH OF WELL (h_2) (FT) _____

DEPTH-TO-WATER (h_1) (FT) _____

WELL DIAMETER (FT) _____

ONE BORE VOLUME (GAL) _____

SCREENED INTERVAL (FT) _____

FIELD REP _____

INSTRUMENT(S) USED _____

_____

SAMPLING INFORMATION

WITHDRAWAL METHOD _____

FILTER SIZE _____

THERMOMETER ID _____

Ec METER ID _____

pH METER ID _____

PUMP ID _____

ALKALINITY KIT ID _____

CALIBRATION INFORMATION

DATE/TIME OF LAST Ec CALIBRATION _____

TIME OF pH CALIBRATION _____

FOR STANDARD SOLUTION pH 7, INSTRUMENT READING _____

FOR STANDARD SOLUTION pH 4, INSTRUMENT READING _____

FOR STANDARD SOLUTION pH 10, INSTRUMENT READING _____

Eh OF CALIBRATION SOLUTION _____

Eh READING IN CALIBRATION SOLUTION AFTER MEASUREMENT _____

TEMP OF CALIBRATION SOLUTION (°C) _____

SHIPPING INFORMATION

LAB(S) SHIPPED TO: _____ _____ _____

DATE(S) SHIPPED: _____ _____ _____

METHOD OF SHIPMENT: _____ _____ _____

COMMENTS _____

_____

_____

COMPLETE BOLDED DATA FOR ENTRY INTO TMS

WGD-008 (1/88)

GROUNDWATER QUALITY SAMPLING RECORD

PAGE ___ OF ___

FACILITY CODE _____

LOCATION ID _____

LOG DATE _____

ERROR AT 4.50: $\left| \frac{X1 - X2}{XS} \right| \times 100 =$ ___%

1st = ___%

2nd = ___%

INITIAL pH _____

pH CHECK AFTER TITRATION

7.00 = _____

4.00 = _____

pH	ALKALINITY (mg/l Ca CO_3)		
	1st	2nd	3rd
8.90			
8.60			
8.30			
8.05			
7.80			
7.50			
6.50			
5.70			
5.10			
4.80			
4.50			
4.25			
4.00			

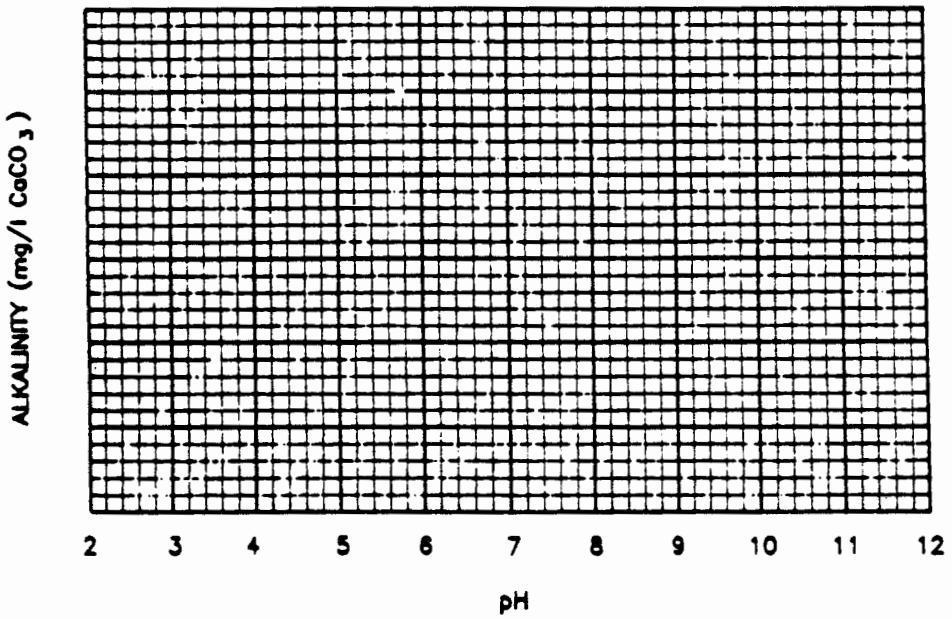

COMPLETE BOLDED DATA FOR ENTRY INTO TIMS
WQD-008 (3/88)

APPENDIX 5.4

STANDARD ELECTRICAL CONDUCTIVITY FORM

STANDARD ELECTRICAL CONDUCTIVITY DATA

FACILITY CODE _____ LOG DATE _____

LOGGER CODE _____ ACCEPTANCE CODE _____

MANUFACTURER/Ec METER ID _____

ELECTRICAL CONDUCTIVITY OF KNOWN SOLUTIONS AT 25° C:	
KNOWN (mg/l KCl)	Ec (meter)

Ec	TEMPERATURE (°C) (LAB THERMOMETER)	TEMPERATURE (°C) (Ec METER)
	0	
	1	
	2	
	3	
	4	
	5	
	6	
	7	
	8	
	9	
	10	
	11	
	12	
	13	
	14	
	15	
	16	
	17	
	18	
	19	
	20	
	21	
	22	
	23	
	24	
	25	

COMMENTS _____

ACCEPTANCE CODES: A—ACCEPTABLE R—RECONNAISSANCE U—UNACCEPTABLE N—NOT DETERMINED

COMPLETE BOLDED DATA FOR ENTRY INTO TMS

SEC-046 (1/88)

_____ FORM COMPLETED BY/DATE

_____ TECHNICAL REVIEWER/DATE

APPENDIX 5.5

STANDARD ALKALINITY TEST RECORD

STANDARD ALKALINITY TEST RECORD

FACILITY CODE _____

FIELD REP _____ LOG DATE _____

ALKALINITY TEST KIT:

MANUFACTURER _____ ALKALINITY TEST KIT ID _____

pH METER:

MANUFACTURER _____ SERIAL NO _____

LAB CODE	STANDARD SOLUTION ID	KNOWN VALUE (mg/l $CaCO_3$)	ALKALINITY TEST VALUES (at pH endpoint = 4.5) mg/l $CaCO_3$

COMMENTS _____

COMPLETE BOLDED DATA FOR ENTRY INTO TIMS
SAT-131 (2/88)

APPENDIX 5.6

DATA FORM COMPLETION

Use a pen with black ink that is not water soluble (not a felt-tip pen). Make an entry in each blank. Where there is no data entry, enter UNK for Unknown, NA for Not Applicable, or ND for Not Done. If any procedure was not performed as prescribed, give the reason for the change or omission on the form. To change an entry, draw a single line through it, add the correct information above it, and initial the change.

SURFACE WATER QUALITY SAMPLING RECORD

1. Facility Code. Five-character code abbreviating the facility name where program activity is being conducted. The first three characters indicate the facility, and the remaining two numbers designate the specific site within the facility.

2. Location ID. Four-character code assigned sequentially to each borehole, test pit, or surface location where chemical, biological, radiological, and other measurements are taken.

3. Sample ID. A four-digit number assigned to ensure that collected data retain uniqueness.

4. Log Date. The date the information recorded on the form was obtained in the format DD-MMM-YY (01-JAN-88).

5. Analytical Lab Code. A three-character code identifying the company responsible for preparing the standard solution.

6. Lot Control Number. A two-digit number denoting that a given set of samples should be analyzed as a lot or group. Normally, this number is not assigned by persons in the field collecting surface water samples.)

7. Sample Type. A one-character code distinguishing the type of sample collected. This classification permits the analysis of data for specific groups of samples. The codes used for water samples are listed below.

D--Duplicate	F--Field Blank
R--Replicate	T--Trip Blank
S--Spike	L--Lab Blank
K--Known	

8. Acceptance Code. A one-character code assigned by the facility manager.

9. Logger Code. Three-character or four-character code identifying the company responsible for collecting the information recorded on the form.

10. Sampling Period. Record the starting and completion times when field measurements were taken in the 24-hr format of hours:minutes (for example, 08:37 for 8:37 a.m. and 19:12 for 7:12 p.m.). See the conversion table below.

Start--the time that collection of water sample begins.

Complete--the time that collection of water sample ends.

Conversion Table

Conventional Time	24-Hour Time
1:00 a.m.	1:00
12:00 Noon	2:00
1:00 p.m.	13:00
2:00 p.m.	4:00
3:00 p.m.	15:00
4:00 p.m.	16:00
5:00 p.m.	17:00
6:00 p.m.	18:00
7:00 p.m.	19:00
8:00 p.m.	20:00
9:00 p.m.	21:00
10:00 p.m.	22:00
11:00 p.m.	23:00
12:00 Midnight	24:00

11. Sampling Method. A two-character code identifying the method used to collect a soil, rock, or water sample. The codes used for various water sampling methods are listed below.

B--Bailer	AL--Air Lift Sampler
C--Composite	BP--Bladder Pump
G--Grab	PP--Peristaltic Pump
R--Random	SL--Suction Lift Pump
S--Systematic	SP--Submersible Pump

12. Date Sent. The date the water sample was sent from the field collection site to the analytical laboratory in the format DD-MMM-YY (01-JAN-88).

13. Comments. Includes preservation method, acidified or nonacidified, type of acid (if acid was used to preserve water sample), and any additional information.

14. Parameter Measurements. The measurements listed below are recorded at the time the sample is collected.

    a. Potential of Hydrogen--the pH of the water sample in S.U. units at the time of collection.

    b. Specific Conductance--The specific conductance of the water sample in micromhos/cm (mhos/cm) at the time of collection.

    c. Redox Potential--The redox potential of the water sample in millivolts (mV) at the time of collection.

d. Temperature--The temperature of the water sample in degrees Celsius (°C) at the time of collection.

e. Alkalinity ($CaCO_3$)--The alkalinity of the water sample in milligrams per liter (mg/liter) at the time of collection.

f. Dissolved Oxygen--The dissolved oxygen content of the water sample in milligrams per liter (mg/liter) at the time of collection.

15. Facility Code. Five-character code abbreviating the facility name where program activity is being conducted. The first three characters indicate the facility, and the remianing two numbers designate the specific site within the facility.

16. Location ID. Four-character code assigned sequentially to each borehole, test pit, or surface location where chemical, biological, radiological, and other measurements are taken.

17. Log Date. The date the information recorded on the form was obtained in the format DD-MMM-YY (01-JAN-88).

18. Withdrawal Method. The sampling device used to collect the surface water sample.

19. Filter Size. Size of filter in use.

20. Thermometer ID. The identification of the thermometer used.

21. Ec Meter ID. The control number and manufacturer of the meter used to measure the specific conductance of samples or calibration solutions.

22. pH Meter ID. The control number and manufacturer of the meter used to measure the pH of samples of standard solutions.

23. Pump ID. Identification of the pump in use.

24. Alkalinity Kit ID-identification and model or serial number of the alkalinity kit used.

25. Field Rep. Name of the field representative.

26. Instruments Used. The types of instruments used to obtain measurements, monitor air quality, or facilitate the collection of a sample or test performance.

27. Calibration Information. After performing the alkalinity titration test and immediatley before sample collection, record the information listed below.

    a. Date/Time of Last Ec Calibration. Date and time that the specific conductivity meter was last calibrated in format of year:month:day/hour:minute.

b. Time of pH Calibration. Time the pH meter was calibrated in hours:minutes.

c. Standard Solution pH Readings. The pH readings are to be recorded as the probe is immersed in standard solutions of pH 7.0, 4.0 and 10.0.

d. Eh of Calibration Solution. The Eh of the solution supplied by the laboratory to calibrate the specific conductance meter.

e. Eh Reading in Calibration Solution after Measurement. The numerical value obtained after immersing the Eh probe in the standard solution.

f. Temp of Calibraiton Solution (°C). The temperature of the Eh standard solution measured during the time that the probe is immersed.

28. Shipping Information. Information that includes the date, method, laboratory where the samples were shipped, and a comments section.

29. Facility Code. Five-character code abbreviating the facility name where program activity is being conducted. The first three characters indicate the facility, and the remaining two numbers designate the specific site within the facility.

30. Locaiton ID. Four-character code assigned sequentially to each borehole, test pit, or surface location where chemical, biological, radiological, and other measurements are taken.

31. Log Date. The date the information recorded on the form was obtained in the format DD-MMM-YY (01-JAN-88).

32. Error at 4.50. Error calculation to test the precision of the alkalinity measurement. Two tests for alkalinity are performed on the same sample, and the values are written on the pH/Alkalinity chart. The alkalinity at pH = 4.50 for test number one (x1) is subtracted from alkalinity determined in test number two (x2), and the result is divided by sx (the value of x1 or x2, whichever is smaller). The absolute value of the result is multiplied by 100 to obtrain a percentage. If the calculated error is less than 10%, no further runs are necessary. If the calculated error is greater than 10%, a third test must be run. After the third test, the field sampler should use his/her judgement to recalculate the error using the value from the third test.

33. Alkalinity (mg/*l* $CaCO_3$). The alkalinity of the water sample in milligrams per liter (mg/liter) at different values of pH during titration.

34. Facility Code. Five-character code abbreviating the facility name where program activity is bgeing conducted. The first three characters indicate the facility, and the remaining two numbers designate the specific site within the facility.

35. Location ID. Four-character code assigned sequentially to each borehole, test pit, or surface location where chemical, biological, radiological, and other measurements are taken.

36. Log Date. The date the information recorded on the form was obtained in the format DD-MMM-YY (01-JAN-88).

37. Sample ID. A four-digit number assigned to ensure that collected data retain uniqueness.

38. Alkalinity Test Kit ID. The control number used to identify the kit being utilized to measure the alkalinity of a sample or standard solution.

39. Potential of Hydrogen. The pH of the water sample in S.U. units at the time of collection.

40. Alkalinity ($CaCO_3$). Enter the field alkalinity of the water sample in milligrams per liter (mg/liter) at the time of collection in the field value column.

41. True Value. Each standard solution will be prepared to a specific alkalinity as specified by the site manager. This value will not be disclosed to the field samplers until they have completed their calibration runs. After the calibration runs are complete, the samplers must contact the site manager and report the values determined in the field. If the values are within 10% of the known value, the site manager will authorize the sampling and supply the values that are to be entered in this data entry field.

42. Field Value. The alkalinity value that samplers determined in the field on the calibration run.

43. Uncertainty (%) = $(100) * \left(\frac{\text{Field Value - True Value}}{\text{True Value}}\right)$

44. Comments. Any additional information.

APPENDIX 5.6, Continued

GROUNDWATER QUALITY SAMPLING RECORD

1. Facility Code. Five-character code abbreviating the facility name where program activity is being conducted. The first three characters indicate the facility, and the remaining two numbers designate the specific site within the facility.

2. Location ID. Four-character code assigned sequentially to each borehole, test pit, or surface location where chemical, biological, radiological, and other measurements are taken.

3. Sample ID. A four-digit number assigned to ensure that collected data retain uniqueness.

4. Log Date. The date the information recorded on the form was obtained in the format DD-MMM-YY (01-JAN-88).

5. Analytical Lab Code. A three-character code identifying the company responsible for preparing the standard solution.

6. Lot Control Number. A two-digit number denoting that a given set of samples should be analyzed as a lot or group. Normally, this number is not assigned by persons in the field collecting surface water samples.

7. Sample Type. A one-character code distinguishing the type of sample collected. This classification permits the analysis of data for specific groups of samples. The codes used for water samples are listed below.

D--Duplicate	F--Field Blank
R--Replicate	T--Trip Blank
S--Spike	L--Lab Blank
K--Known	

8. Acceptance Code. A one-character code assigned by the facility manager.

9. Logger Code. Three-character or four-character code identifying the company responsible for collecting the information recorded on the form.

10. Initial Groundwater Depth. Distance in feet from the top of the casing to the surface of the water in the well. This length is determined by using the well sounder before measuring the depth of the well. Measure depth-to-water to the nearest tenth of a foot.

11. Sample depth. The depth at which the sample was taken.

12. Sampling Period. Record the starting and completion times when field measurements were taken in the 24-hr format of hours:minutes (for example, 08:37 for 8:37 a.m. and 19:12 for 7:12 p.m.). See the conversion table below.

Start--the time that collection of water sample begins.

Complete--the time that collection of water sample ends.

Conversion Table

Conventional Time	24-Hour Time
1:00 a.m.	1:00
12:00 Noon	2:00
1:00 p.m.	13:00
2:00 p.m.	4:00
3:00 p.m.	15:00
4:00 p.m.	16:00
5:00 p.m.	17:00
6:00 p.m.	18:00
7:00 p.m.	19:00
8:00 p.m.	20:00
9:00 p.m.	21:00
10:00 p.m.	22:00
11:00 p.m.	23:00
12:00 Midnight	24:00

13. Sampling Method. A two-character code identifying the method used to collect a soil, rock, or water sample. The codes used for various water sampling methods are listed below.

B--Bailer	AL--Air Lift Sampler
C--Composite	BP--Bladder Pump
G--Grab	PP--Peristaltic Pump
R--Random	SL--Suction Lift Pump
S--Systematic	SP--Submersible Pump

14. Date Sent. The date the water sample was sent from the field collection site to the analytical laboratory in the format DD-MMM-YY (01-JAN-88).

15. Comments. Includes preservation method, acidified or nonacidified, type of acid (if acid was used to preserve water sample), and any additional information.

16. Final Parameter Measurements. The following measurements are recorded at the time the sample is collected.

    a. Potential of Hydrogen. The pH of the water sample in S.U. units at the time of collection.

    b. Specific conductance. The specific conductance of the water sample in micromhos/cm (mhos/cm) at the time of collection.

    c. Redox Potential. The redox potential of the water sample in millivolts (mV) at the time of collection.

d. Temperature. The temperature of the water sample in degrees Celsius (°C) at the time of collection.

e. Alkalinity ($CaCO_3$). The alkalinity of the water sample in milligrams per liter (mg/liter) at the time of collection.

f. Dissolved Oxygen. The dissolved oxygen content of the water sample in millligrams per liter (mg/liter) at the time of collection.

17. The Groundwater Quality Record form contains data that are collected during well purging. These are described below.

    a. Time. The time when a field measurement of purged water was performed in the format HH:MM.

    b. Total Volume Withdrawn. Using a bucket or flow meter, the field sampler will note the number of gallons of water purged from the well at the time that a field measurement is taken. This entry is cumulative and represents the total volume of water purged before sampling may begin. A second column is provided so that the field sampler can equate gallons as bore volumes purged.

    c. pH. The pH readings of water sampled during the purging process.

    d. Ec. The specific conductance readings of water sampled during the purging process in micromhos/cm (mhos/cm).

    e. Temp (°C). The temperature of the water sampled during the purging process.

    f. Comments. Includes preservation method, acidified or nonacidified, type of acid (if acid was used to preserve water sample), and any additional information.

18. Facility Code. Five-character code abbreviating the facility name where program activity is being conducted. The first three characters indicate the facility, and the remaining two numbers designate the specific site within the facility.

19. Location ID. Four-character code assigned sequentially to each borehole, test pit, or surface location where chemical, biological, radiological, and other measurements are taken.

20. Log Date. The date the information recorded on the form was obtained in the format DD-MMM-YY (01-JAN-88).

21. Depth of Well (h_2). Distance in feet from the top of the casing to the bottom of the well. This length can be determined by bottoming out a water level sounder against the bottom cap of the well. Measure the depth of the well to the nearest tenth of a foot.

22. Depth-to-Water (h_1). Distance in feet from the top of the casing to the surface of the water in the well. This length is determined by using the well sounder before measuring the depth of the well. Measure depth-to-water to the nearest tenth of a foot.

23. Well Diameter. The inside diameter of the well casing measured to the nearest tenth of a foot.

24. One Bore Volume. The volume of water contained in the well before purging is started. One bore volume is determined by the equation included on the form.

25. Screened Interval (Ft). Depth from the top of the casing to the midpoint of the screen or well section open to the aquifer. Well completion information must be consulted to determine the length and position of the screen.

26. Field Rep. Name of the field representative.

27. Instruments Used. Well sounding instruments and the type of system used to purge the well.

28. Withdrawal Method. The method used to sample the well.

29. Filter Size. The filter size being used.

30. Thermometer ID. The identification of the thermometer being used.

31. Ec Meter ID. The control number and manufacturer of the meter used to measure the specific conductance of samples or calibration solutions.

32. pH Meter ID. The control number and manufacturer of the meter used to measure the pH of samples of standard solutions.

33. Pump ID. Identification and model or serial number of the alkalinity kit used.

34. Alkalinity Kit ID. Identification and model or serial number of the alkalinity kit used.

35. Calibration Information. After performing the alkalinity titration test and immediately before sample collection, the information listed below will be recorded.

    a. Date/Time of Last Ec Calibration. Date and time that the specific conductivity meter was last calibrated in format of year:month:day/hour:minute.

    b. Time of pH Calibration. Time the pH meter was calibrated in hours:minutes.

c. Standard Solution pH readings. The pH readings are to be recorded as the probe is immersed in standard solutions of pH 7.0, 4.0, and 10.0.

d. Eh of Calibration Solution. The Eh of the solution supplied by the laboratory to calibrate the specific conductance meter.

e. Eh Reading in Calibration Solution after Measurement. The numerical value obtained after immersing the Eh probe in the standard solution.

f. Temp of Calibration Solution (°C). The temperature of the Eh standard solution measured during the time that the probe is immersed.

36. Shipping Information. Information that includes the date, method, laboratory where the samples were shipped, and a comments section.

37. Facility Code. Five-character code abbreviating the facility name where program activity is being conducted. The first three characters indicate the facility, and the remaining two numbers designate the specific site within the facility.

38. Location ID. Four-character code assigned sequentially to each borehole, test pit, or surface location where chemical, biological, radiological, and other measurements are taken.

39. Log Date. The date the information recorded on the form was obtained in the format DD-MMM-YY (01-JAN-88).

40. Error at 4.50. Error calculation to test the precision of the alkalinity measurement. Two tests for alkalinity are performed on the same sample, and the values are written on the pH/Alkalinity chart. The alkalinity at pH = 4.50 for test number one (x1) is subtracted from alkalinity determined in test number two (x2), and the result is divided by sx (the value of x1 or x2, whichever is smaller). The absolute value of the result is multiplied by 100 to obtain a percentage. If the calculated error is less than 10%, no further runs are necessary. If the calculated error is greater than 10%, a third test must be run. After the third test, the field sampler should use his/her judgement to recalculate the error using the value from the third test.

41. Alkalinity (mg/*l* $CaCO_3$). The alkalinity of the water sample in milligrams per liter (mg/liter) at different pH values during titration.

APPENDIX 5.6, Continued

STANDARD ELECTRICAL CONDUCTIVITY FORM

1. Facility Code. Five-character code abbreviating the facility name where program activity is being conducted. The first three characters indicate the facility, and the remaining two numbers designate the specific site within the facility.

2. Logger Code. Three-character or four-character code identifying the company responsible for collecting the information recorded on the form.

3. Ec Meter ID. The control number and manufacturer of the meter used to measure the specific conductance of samples or calibration solutions.

4. Log Date. The date the information recorded on the form was obtained in the format DD-MMM-YY (01-JAN-88).

5. Acceptance Code. A one-character code assigned by the facility manager.

6. Known Value. Each standard solution will be prepared to a specific alkalinity as specified by the site manager. This value will not be disclosed to the field samplers until they have completed their calibration runs. After the calibration runs are complete, the samplers must contact the site manager and report the values determined in the field. If the values are within 10% of the known value, the site manager will authorize the sampling and supply the values that are to be entered in this data entry field.

7. Ec. The specific conductance of the water sample in micromhos/cm (mhos/cm) at the time of collection.

8. Temperature (°C). The temperature of the water sample in degrees Celsius (°C) at the time of collection.

9. Comments. Any other information.

APPENDIX 5.6, Concluded

STANDARD ALKALINITY TEST RECORD

1. Facility Code. Five-character code abbreviating the facility name where program activity is being conducted. The first three characters indicate the facility, and the remaining two numbers designate the specific site within the facility.

2. Field Rep. Name of the field representative.

3. Log Date. The date the information recorded on the form was obtained in the format DD-MMM-YY (01-JAN-88).

4. Manufacturer. The company that manufactures the alkalinity test kit.

5. Alkalinity Test Kit ID. The control number used to identify the kit being utilized to measure the alkalinity of a sample or standard solution.

6. pH Meter ID. The control number and manufacturer of the meter used to measure the pH of samples of standard solutions.

7. Lab Code. A three-character code identifying the company responsible for preparing the standard solution.

8. Standard Solution ID. The control number used to identify the standard solution prepared by the quality control laboratory. The control number is assigned by the laboratory and conforms to the internal numbering system.

9. Known Value. Each standard solution will be prepared to a specific alkalinity as specified by the site manager. This value will not be disclosed to the field samplers until they have completed their calibration runs. After the calibration runs are complete, the samplers must contact the site manager and report the values determined in the field. If the values are within 10% of the known value, the site manager will authorize the sampling and supply the values that are to be entered in this data entry field.

10. Alkalinity Test Values ($CaCO_3$). The alkalinity of the water sample in milligrams per liter (mg/liter) at the endpoint of titration (pH = 4.50).

11. Comments. Includes preservation method, acidified or nonacidified, type of acid (if acid was used to preserve water sample), and any additional information.

STANDARD OPERATING PROCEDURE 2.3

SAMPLING MONITORING WELLS WITH A BLADDER PUMP

1. PURPOSE

To use a bladder pump to obtain representative groundwater samples at shallow depths that are beyond the capabilities of a peristaltic pump.

2. DISCUSSION

Each site-specific Remedial Investigation Plan (RIP) contains specific details about the procedures and equipment for this SOP. Refer to the RIP for the type of samples to be collected. The collection and measurement of samples and documentation of data will be performed as described in the associated procedures.

For this procedure, a Middleburg squeeze-type bladder pump made completely of stainless steel and Teflon (for example, IEA, TIMCO, Well Wizard, Geoguard, and others) provides the least amount of material interference to the sample (Barcelona 1985). Analyses for a wide variety of metals, radionuclides, and organics, as well as field parameters, are valid for a sample obtained with this system. The water comes into contact with the inside of the bladder (Teflon) and the sample tubing (also Teflon) that may be dedicated to each well. Some wells may have permanently installed bladder pumps (for example, Well Wizard or Geoguard) that will be used to sample for all parameters.

Testing has shown that the nongas, contact positive-displacement pump causes less aeration in the sample than do various other retrieval methods (Barcelona 1984 and Nielsen 1985). Although no system can provide a true *in situ* sample, this method (if employed correctly) can yield a sample that is valid for numerous field measurements and chemical analyses, including organics. Although volatile organics may be collected by this method, sampling for volatile organics is so highly specialized that it is presented separately in SOP 2.8, Sampling for Volatile Organics.

3. PROCEDURES

3.1. Associated Procedures

Before every operation, a review of the SOPs 1.1-1.10 is necessary. These SOPs contain information on the performance of field activities. They should be consulted for specific information about equipment and supplies; sample collection, preservation, packaging, and shipping; decontamination procedures; and documentation requirements. Procedures directly associated with this SOP are listed below.

SOP No.	SOP Title
1.1	General Instructions for Field Personnel
1.3	Sample Control and Documentation
1.4	Sample Containers and Preservation
1.5	Guide to Handling, Packaging, and Shipping of Samples
1.6	General Equipment Decontamination
2.1	Presample Purging of Wells
2.2	Field Measurements on Groundwater and Surface Water Samples
3.1	Water Level Measurement

Monitoring wells are sampled immediately after the field measurements are taken by connecting the pump outlet tubing directly to the filter unit for filtered samples. Decrease the pump pressure so that the pressure buildup on the filter does not blow out the pump bladder or rupture the filter. Collect nonfiltered samples directly from the outlet tubing into the sample bottle.

3.2. Preparation

3.2.1. Office

A. Review the RIP and SOPs listed in Section 3.1.

B. Coordinate schedules/actions with the installation staff.

C. Obtain appropriate permission for property access.

D. Assemble the equipment and supplies listed in Appendix 5.1. Ensure the proper operation of all sampling equipment.

E. Notify the analytical laboratory of sample types, the number of samples, and the approximate arrival date.

F. Contact the carrier that will transport samples to obtain information on regulations and specifications.

G. Ensure that permission to discharge or a containment vessel for purged water has been obtained.

3.2.2. Documentation

A. Obtain a logbook from the QA officer.

B. Record results of the equipment check in the logbook.

C. Obtain a sufficient number of the appropriate ER Program data collection forms (see INDEX TO SOPs).

D. Consult the ER Program data administrator for a current list of information management codes, location IDs, and sample numbers used in the completion of data forms.

3.2.3. Field

A. Locate the monitoring wells to be sampled and the appropriate decontamination area. Locate staging area and areas for managing purged water and expendable sampling materials. Check decontamination zones and barricades to public access.

B. Decontaminate all sampling equipment before taking the first sample and between sampling intervals (see SOP 1.6, General Equipment Decontamination, and the RIP).

C. Sample monitoring wells from least to most contaminated to reduce the possibility for cross-contamination.

NOTE: Whenever a sample is collected, a custody record must be initiated on the Custody Transfer Record/Lab Work Request form and a Water Sample Identification Label affixed to the sample container. SOP 1.3, Sample Control and Documentation, contains copies of the form and label and instructions for completing the form and label.

3.3. **Operation**

3.3.1. Procedure for Operating a Bladder Pump

A. Unlock the well and use a stiff brush to brush away any dirt or debris from around the well cap. Remove the cap.

B. Use a petroleum detection probe to determine the presence of any floating organics in the wellbore water column. The probe can also be used to determine the total depth of the well and the depth-to-water.

C. Lower the precleaned water level probe or petroleum detection probe down the well until the indicator sounds (see SOP 3.1, Water Level Measurement). Measure (to the nearest 0.01 ft) the depth-to-water from the mark on the well casing. Record this measurement in the logbook.

D. For bladder pump purging, proceed as described below.

1. Whenever a well is purged or sampled with the bladder pump, record all field measurements and chemistry determinations on either the Groundwater Level or the Groundwater Levels and Gasoline Thickness Data form, as well as the Groundwater Quality Sampling Record form.

   Copies of these forms and instructions for completing the forms are provided in SOP 2.2, Field Measurements on Ground and Surface Water Samples, and SOP 3.1, Water Level Measurement.

2. Purge the well as described in SOP 2.1, Presample Purging of Wells.

3. Attach the pump to the dedicated Teflon tubing. Lower the pump down the well until it is just below the surface of the water. Begin pumping and follow the water level down the wellbore to ensure that all of the stagnant water in the casing is removed. This is not possible for permanently installed dedicated pumps.

4. To avoid pumping the well dry, reduce the pumping rate after the water level has fallen to the screened level so that the rate of water removal does not exceed the rate of recovery after the water level has fallen to the screened level from the formation.

E. Allow the well to recover to 80% of its initial volume (.8 bore volumes) before sampling. Use the water level probe to monitor well recovery. If a well is not recovering rapidly, the site manager may choose to have the well sampled before the 80% recovery has been achieved.

3.3.2. Procedure for Collecting Samples

NOTE: Consult the associated SOPs for information about collecting and measuring samples and the documentation of data.

A. Before collecting data, calibrate probes for the required measurements (see SOP 2.2, Field Measurements on Ground and Surface Water Samples).

B. To collect samples, lower the pump down the well until the bottom (intake) of the pump is just at the top of the well screen. The well-dedicated pumps should have been installed at this depth.

C. The type of analysis for which a sample is collected determines the type of bottle, preservative, holding time, and filtering requirements (see SOP 1.4, Sample Containers and Preservation).

D. Adjust the pump and pressure rates with the cycle time so that the flow is not violent. In this way, the sample can be obtained in a timely manner.

E. Do not filter the samples unless so directed by the RIP.

F. Ensure that all samples specified in the RIP have been collected.

3.4. Postoperation

3.4.1. Field

A. Ensure that all equipment is accounted for, decontaminated (see SOP 1.6, General Equipment Decontamination), and ready for shipment.

B. Restore the site to presampling conditions as specified in the RIP.

C. Make sure all monitoring wells are properly labeled and the location I.D. is readily visible on the protective casing.

D. Prepare samples and transport according to SOP 1.3, Sample Control and Documentation; SOP 1.4, Sample Containers and Preservation; and SOP 1.5, Guide to Handling, Packaging, and Shipping of Samples.

3.4.2. Documentation

A. Record cleanup procedures and any uncompleted work (like site restoration or long-term monitoring) in the logbook.

B. Complete logbook entries, verify the accuracy of entries, and sign/initial all pages.

C. Review data collection forms for completeness.

3.4.3. Office

A. Deliver original forms and logbooks to the site manager for technical review. He/she will review, sign forms, and transmit to the document control officer (copies to the files) for eventual delivery to the Department of Energy.

B. Inventory equipment and supplies. Repair or replace all broken or damaged equipment. Replace expendable items. Return equipment to the equipment manager and report incidents of malfunction or damage.

C. Contact the analytical laboratory to ensure that samples arrived safely and instructions for sample analyses are clearly understood.

4. SOURCES

Barcelona, M. J., J. A. Helfrich, E. E. Garske, and J. P. Gibb. 1984. "A Laboratory Evaluation of Groundwater Sampling Mechanisms." Groundwater Monitoring Review, Spring 1984: 32-41.

Barcelona, M. J., J. A. Helfrich, and E. E. Garske. 1985. "Sampling Tubing Effects on Groundwater Samples." Analy. Chem. No. 57: 460-63.

EPA. 1981. "Manual of Groundwater Quality Sampling Procedures." U.S. Environmental Protection Agency report EPA-600/2-81-160. Washington, D.C.: U.S. Government Printing Office.

EPA. 1982. "Handbook for Sampling and Sample Preservation of Water and Wastewater." U.S. Environmental Protection Agency report EPA-600/4-82-029. Washington, D.C.: U.S. Government Printing Office.

EPA. 1983. "Methods for Chemical Analysis of Water and Wastes." U.S. Environmental Protection Agency report EPA-600/4-79-020. Washington, D.C.: U.S. Government Printing Office.

EPA. 1984. "Test Methods for Evaluation of Solid Waste." 2d ed. U.S. Environmental Protection Agency report EPA-SW-846. Washington, D.C.: U.S. Government Printing Office.

EPA. 1985. "Practical Guide for Groundwater Sampling." U.S. Environmental Protection Agency report EPA/600/2-85/104. Washington, D.C.: U.S. Government Printing Office.

EPA. 1986. "RCRA Groundwater Monitoring Technical Enforcement Guidance Document." U.S. Environmental Protection Agency report OSWER-9950.1. Washington, D.C.: U.S. Government Printing Office.

Korte, Nic, and Dennis Ealey. 1983. "Procedures for Field Chemical Analyses of Water Samples." U.S. Department of Energy, GJ/TMC-07, Technical Measurements Center, Grand Junction Projects Office, Grand Junction, Colorado.

Korte, Nic, and Peter Kearl. 1985. "Procedures for the Collection and Preservation of Groundwater and Surface Water Samples and for the Installation of Monitoring Wells: Second Edition." U.S. Department of Energy, GJ/TMC-08, Technical Measurements Center, Grand Junction Projects Office, Grand Junction, Colorado.

Neilsen, David M., and Gillian L. Yeates. 1985. "A Comparison of Sampling Mechanisms Available for Small-Diameter Groundwater Monitoring Wells." Groundwater Monitoring Review, Spring 1985: 83-99.

CFR 49. 1985. Code of Federal Regulations, Title 49, U.S. Department of Transporatation, Parts 100-177. November 1, 1985. Washington, D.C.: U.S. Government Printing Office.

5. APPENDIX

5.1. Equipment and Supplies Checklist

APPENDIX 5.1

EQUIPMENT AND SUPPLIES CHECKLIST

_____ Nongas contact bladder pump (with Teflon tubing)

_____ Compressor/batteries/battery chargers

_____ Amber glass bottles with Teflon-lined caps (0.5, 1, and 2 liters)

_____ Clear glass vials with Teflon septa (40 ml)

_____ Plastic bottles (1 liter)

_____ Teflon or other chemically inert tubing

_____ Stiff brush

_____ Concentrated H_2SO_4 (if needed)

_____ 40% NaOH (if needed)

_____ Insulated coolers

_____ Blue Ice or equivalent

_____ Padding for packaging of samples

_____ Swagelok fittings

_____ Plastic sheet

_____ Any additional supplies listed in associated procedures, as needed

STANDARD OPERATING PROCEDURE 2.4

SAMPLING MONITORING WELLS WITH A BUCKET-TYPE BAILER

1. PURPOSE

To obtain a representative groundwater sample at depths beyond the range (or capability) of suction lift pumps when volatile air stripping is of concern, well-casing diameters are too narrow to accept submersible pumps, or other difficult conditions are present.

2. DISCUSSION

The Remedial Investigation Plan (RIP) contains specific details about the procedures and equipment for this SOP. Refer to the RIP for the type of samples to be collected. Collection and measurement of samples and documentation of data will be performed as established in the associated procedures.

Bucket-type bailers are tall, narrow buckets equipped with a check valve on the bottom. This valve allows water to enter from the bottom as the bailer is lowered and prevents its release as the bailer is raised. Although top-filling bailers are also available and may be useful for well purging, they generally cause increased sample turbulence and are not recommended for sample acquisition.

Because of the aeration associated with most other recovery systems, the bucket-type bailer is the preferred method for collecting samples that are susceptible to volatile component air stripping or degradation. Samples can be recovered with a minimum of aeration if care is taken to gradually lower the bailer until it contacts the water surface and to allow it to sink as it fills. Teflon is generally the best construction material, but other materials (like PVC or stainless steel) are acceptable if compatible with the designated sample analysis outlined in the RIP. The primary disadvantages of bailers are their limited sample volume and inability to collect discrete samples from a depth below the water surface.

3. PROCEDURES

3.1. Associated Procedures

Before every operation, a review of the SOPs 1.1-1.10 is necessary. These SOPs contain information on the performance of field activity. They should be consulted for specific information about equipment and supplies; sample collection, preservation, packaging, and shipping; decontamination procedures; and documentation requirements. Procedures directly associated with this SOP are listed below.

SOP No.	SOP Title
1.1	General Instructions for Field Personnel
1.3	Sample Control and Documentation
1.4	Sample Containers and Preservation

SOP No.	SOP Title
1.5	Guide for Handling, Packaging, and Shipping of Samples
1.6	General Equipment Decontamination
2.1	Presample Purging of Wells
2.2	Field Measurements on Ground and Surface Water Samples
2.8	Sampling for Volatile Organics
3.1	Water Level Measurement

3.2. Preparation

3.2.1. Office

A. Review the RIP and SOPs listed in Section 3.1.

B. Coordinate schedules/actions with the installation staff.

C. Obtain appropriate permission for property access.

D. Assemble the equipment and supplies listed in Appendix 5.1. Ensure the proper operation of all sampling equipment.

E. Notify the analytical laboratory of sample types, the number of samples, and the approximate arrival date.

F. Contact the carrier that will transport samples to obtain information on regulations and specifications.

G. Ensure that a containment system is available to collect purged water, as appropriate.

3.2.2. Documentation

A. Obtain a logbook from the QA officer.

B. Record results of the equipment check in the logbook.

C. Obtain a sufficient number of the appropriate ER Program data collection forms (see INDEX TO SOPs).

D. Consult the ER Program data administrator for a current list of information management codes, location IDs, and sample numbers used in the completion of data forms.

3.2.3. Field

A. Locate the monitoring wells to be sampled and the appropriate decontamination area. Locate staging area and areas for managing purged water and expendable sampling materials. Check decontamination zones and barricades to public access.

B. Decontaminate all sampling equipment before taking the first sample and between sampling intervals (see SOP 1.6, General Equipment Decontamination, and the RIP).

C. Sample monitoring wells from least to most contaminated to reduce the possibility for cross-contamination.

3.3. Operation

3.3.1. Procedures for Operating a Bucket-Type Bailer

A. Unlock the well and use a stiff brush to brush away any dirt or debris from around the well cap. Remove the cap.

B. Use a petroleum detection probe to determine the presence of any floating organics in the wellbore water column. The probe can also be used to determine the total depth of the well and the depth-to-water.

C. Lower the precleaned water level probe or petroleum detection probe down the well until the indicator sounds (see SOP 3.1, Water Level Measurement). Measure (to the nearest 0.01 ft) the depth-to-water from the mark on the well casing. Record this measurement in the logbook.

D. Collect a sample from the first bailer if specified in the RIP. Otherwise, purge the well as described in SOP 2.1, Presample Purging of Wells, or SOP 2.3, Sampling Monitoring Wells with a Bladder Pump.

E. Allow the well to recover to 80% of its initial volume (.8 bore volumes) before sampling. Use the water level probe to monitor well recovery. If a well is not recovering rapidly, the site manager may choose to have the well sampled before the 80% recovery has been achieved.

F. Set up the reel and tripod wellhead and attach the bailer to the cable or line.

G. Slowly lower the bailer into the well until it contacts the water surface.

H. Allow the bailer to sink and fill with a minimum of surface disturbance.

I. Slowly raise the bailer out of the well. Do not allow the bailer line to contact the ground, either by coiling it on a plastic sheet or by looping it from arm to arm as the line is extracted from the well. The use of a reel greatly simplifies this process.

3.3.2. Procedure for Collecting Samples

NOTE: Also consult the associated SOPs for information on collecting and measuring samples and the documentation of data.

A. Whenever a well is sampled, record all field measurements and chemistry determination on either the Groundwater Level or the Groundwater Levels and Gasoline Thickness Data form, as well as the Groundwater Quality Sampling Record form.

   Copies of these forms and instructions for completing the forms are provided in SOP 2.2, Field Measurements on Ground and Surface Water Samples, and SOP 3.1, Water Level Measurement.

B. Tip the bailer to allow a slow discharge to flow gently down the inside wall of the sample bottle with minimal entry turbulence. Use of a bottom-emptying device is not recommended.

C. Filter or preserve the sample as specified in the RIP.

D. Repeat the necessary steps as needed to acquire a sufficient volume of sample (see SOP 1.4, Sample Containers and Preservation).

   NOTE: Whenever a sample is collected, a custody record must be initiated on the Custody Transfer Record/Lab Work Request form and a Water Sample Identification Label affixed to the sample container. SOP 1.3, Sample Control and Documentation, contains copies of the form and label and instructions for completing the form and label.

E. Use a Teflon-lined cap if necessary. Secure the cap tightly.

F. Thoroughly decontaminate the bailer before sampling the next well, according to specific laboratory instructions or the general guidelines in SOP 1.6, General Equipment Decontamination. In some cases, especially where trace analysis is desired, it may be prudent to use a dedicated bailer for each well.

3.4. Postoperation

3.4.1. Field

A. Ensure that all equipment is accounted for, decontaminated (see SOP 1.6, General Equipment Decontamination), and ready for shipment.

B. Restore the site to presampling conditions and fill open sampling holes as specified in the RIP.

C. Make sure all monitoring wells are properly labeled and the location ID is readily visible on the protective casing.

D. Prepare samples and transport according to SOP 1.3, Sample Control and Documentation; SOP 1.4, Sample Containers and Preservation; and SOP 1.5, Guide to Handling, Packaging, and Shipping of Samples.

3.4.2. Documentation

A. Record cleanup and hole abandonment procedures and any uncompleted work (like site restoration or long-term monitoring) in the logbook.

B. Complete logbook entries, verify the accuracy of entries, and sign/initial all pages.

C. Review data collection forms for completeness.

3.4.3. Office

A. Deliver original forms and logbooks to the site manager for technical review. He/she will review, sign forms, and transmit to the document control officer (copies to the files) for eventual delivery to the Department of Energy.

B. Inventory equipment and supplies. Repair or replace all broken or damaged equipment. Replace expendable items. Return equipment to the equipment manager and report incidents of malfunction or damage.

C. Contact the analytical laboratory to ensure that samples arrived safely and that instructions for sample analyses are clearly understood.

4. SOURCES

Dunlap, W. J., J. F. McNabb, M. R. Scalf, and R. L. Crosby. 1977. " Sampling for Organic Chemicals and Microorganism in the Subsurface." U.S. Environmental Protection Agency report EPA/600/2-77/176. August 1977. Washington, D.C.: U.S. Government Printing Office.

Ford, Patrick J., Paul J. Turina, and Douglas E. Seely. 1984. "Characterization of Hazardous Waste Sites - A Methods Manual", in Vol. II of Available Sampling Methods. 2d ed. U.S. Environmental Protection Agency report EPA/600/4-84/076. Washington, D.C.: U.S. Government Printing Office.

5. APPENDIX

5.1. Equipment and Supplies Checklist

APPENDIX 5.1

EQUIPMENT AND SUPPLIES CHECKLIST

_____ Teflon bailers

_____ Amber glass bottles with Teflon-lined caps (0.5, 1, and 2 liters)

_____ Clear glass vials with Teflon septa (40 ml)

_____ Plastic bottles (1 liter)

_____ Stiff brush

_____ Concentrated H_2SO_4 (if needed)

_____ 40% NaOH (if needed)

_____ Insulated coolers

_____ Blue Ice or equivalent

_____ Padding for packaging of samples

_____ Plastic sheet

_____ Any additional supplies listed in associated procedures, as needed

STANDARD OPERATING PROCEDURE 2.5

SAMPLING MONITORING WELLS WITH A SUBMERSIBLE PUMP

1. PURPOSE

To obtain a representative sample of the groundwater at depths beyond the capabilities of peristaltic pumps when bailing and bladder pumps are ineffective.

2. DISCUSSION

The Remedial Investigation Plan (RIP) contains specific details about the procedures and equipment for this SOP. Refer to the RIP for the type of samples to be collected. Collection and measurement of samples and the documentation of data will be performed as described in the associated procedures.

If submersible pumps are constructed from suitably noncontaminating materials, they can be used for sample collection. The chief drawbacks to their use are the lack of control over flow rates, the possible necessity for replacing the Teflon gears frequently, and the potential for cavitation processes at the drive mechanism. The use of submersible pumps in multiple well-sampling programs should be carefully compared with other sampling mechanisms (bailers and bladder pumps). Dedicated pumps should be considered for the sampling of deep wells. In most cases, a sample can be collected by bailer after purging the well with a submersible pump; however, submersible pumps may be the only practical sampling mechanism for extremely deep wells (more than 500 ft to water). Under these circumstances, dedicated pump systems should be installed in the deep well to eliminate possible cross-contamination of well samples.

Submersible pumps are generally constructed from plastics, rubber, and metal parts that could affect the analysis of samples for certain trace organics and inorganics. As a consequence, submersible pumps may be inappropriate for investigations requiring the analysis of samples for trace concentrations of contaminants. However, they may still be useful for presample purging. The RIP provides guidance for using a submersible pump in sampling or purging a specific monitoring well.

Submersible pumps generally use one of two types of power supplies, electric or compressed gas. Electrically powered pumps can run off a 12-volt (V) DC rechargeable battery or a 110-V or 220-V AC power supply. Those units powered by compressed gas normally use a small electric compressor that also needs 12-V DC or 110-V AC power. They may also use compressed gas from bottles or high-performance hand pumps.

3. PROCEDURES

3.1. Associated Procedures

Before every operation, a review of the SOPs 1.1-1.10 is necessary. These SOPs contain information on the performance of field activities. They should be consulted for specific information about equipment and supplies; sample collection, preservation,

packaging, and shipping; decontamination procedures; and documentation requirements. Procedures directly associated with this SOP are listed below.

SOP No.	SOP Title
1.1	General Instructions for Field Personnel
1.3	Sample Control and Documentation
1.4	Sample Containers and Preservation
1.5	Guide to Handling, Packaging, and Shipping of Samples
1.6	General Equipment Decontamination
2.1	Presample Purging of Wells
2.2	Field Measurements on Ground and Surface Water Samples
3.1	Water Level Measurement

3.2. Preparation

3.2.1. Office

A. Review the RIP and SOPs listed in Section 3.1.

B. Coordinate schedules/actions with the installation staff.

C. Obtain appropriate permission for property access.

D. Assemble the equipment and supplies listed in Appendix 5.1. Ensure the proper operation of all sampling equipment.

E. Notify the analytical laboratory of sample types, the number of samples, and the approximate arrival date.

F. Contact the carrier that will transport samples to obtain information on regulations and specifications.

G. Ensure that permission to discharge or a containment system is available to collect purged water.

3.2.2. Documentation

A. Obtain a logbook from the QA officer.

B. Record results of the equipment check in the logbook.

C. Obtain a sufficient number of the appropriate ER Program data collection forms (see INDEX TO SOPs).

D. Consult the ER Program data administrator for a current list of information management codes, location IDs, and sample numbers used in the completion of data forms.

3.2.3. Field

A. Locate monitoring wells to be sampled and the appropriate decontamination area. Locate the staging area and areas for managing purged water and expendable sampling materials. Check decontamination zones and barricades to public access.

B. Decontaminate all sampling equipment before taking the first sample and between sampling intervals (see SOP 1.6, General Equipment Decontamination, and the RIP).

C. Sample monitoring wells from least to most contaminated to reduce the possibility for cross-contamination.

3.3. Operation

3.3.1. Procedure for Operating a Submersible Pump

A. Unlock the well. Use a stiff brush to brush away any dirt or debris from around the well cap, and remove the cap.

B. Use a petroleum detection probe to determine the presence of any floating organics in the wellbore water column. The probe can also be used to determine the total depth of the well and the depth-to-water.

C. Lower the precleaned, water level probe or petroleum detection probe down the well until the indicator sounds (see SOP 3.1, Water Level Measurement). Measure (to the nearest 0.01 ft) the depth-to-water from the mark on the well casing. Record this measurement in the logbook.

D. Purge the well as described in SOP 2.1, Presample Purging of Wells.

E. Allow the well to recover to 80% of its initial volume (.8 bore volumes) before sampling. Use the water level probe to monitor well recovery. If a well is not recovering rapidly, the site manager may choose to have the well sampled before the 80% recovery has been achieved.

3.3.2. Procedure for Collecting Samples

NOTE: Also consult the associated SOPs for information on collecting and measuring samples and the documentation of data.

A. Whenever a well is purged, record all field measurements and chemistry determinations on either the Groundwater Level or the Groundwater Levels and Gasoline Thickness Data form, as well as the Groundwater Quality Sampling Record form. Copies of these forms and instructions for completing the forms are provided in SOP 2.2, Field Measurements on Ground and Surface Water Samples, and SOP 3.1, Water Level Measurement.

B. Fill the appropriate sample bottles by allowing pump discharge to flow gently down the side of the bottle with minimal entry turbulence. The order in which the bottles should be filled may be specified in the RIP. If no order is specified, sample the semivolatile organics, radiological, conventional parameters, inorganics, and field measurements. Submersible pumps are not suitable for the collection of volatile organics. If the sample for inorganics is to be filtered (if dissolved inorganics are required, rather than total inorganics), refer to SOP 2.3, Sampling Monitoring Wells with a Bladder Pump.

NOTE: Whenever a sample is collected, a custody record must be initiated on the Custody Transfer Record/Lab Work Request form and a Water Sample Identification Label affixed to the sample container. SOP 1.3, Sample Control and Documentation, contains copies of the form and label and instructions for completing the form and label.

C. If necessary, use a Teflon-lined cap. Secure the cap tightly.

D. Allow the pump system to drain; disassemble and remove it from the well (if necessary).

E. Decontaminate (according to SOP 1.6, General Equipment Decontamination) before sampling the next well.

3.4. Postoperation

3.4.1. Field

A. Ensure that all equipment is accounted for, decontaminated (see SOP 1.6, General Equipment Decontamination), and ready for shipment.

B. Restore the site to the presampling conditions as specified in the RIP.

C. Make sure all wells are properly labeled and the location ID is readily visible on the guard pipe.

D. Prepare samples and transport according to SOP 1.3, Sample Control and Documentation; SOP 1.4, Sample Containers and Preservation; and SOP 1.5, Guide to Handling, Packaging, and Shipping of Samples.

3.4.2. Documentation

A. Record cleanup procedures and any uncompleted work (like site restoration or long-term monitoring) in the logbook.

B. Complete logbook entries, verify the accuracy of entries, and sign/initial all pages.

C. Review data collection forms for completeness.

3.4.3. Office

A. Deliver original forms and logbooks to the site manager for technical review. He/she will review, sign forms, and transmit to the document control officer (copies to the files) for eventual delivery to the Department of Energy.

B. Inventory equipment and supplies. Repair or replace all broken or damaged equipment. Replace expendable items. Return equipment to the equipment manager and report incidents of malfunction or damage.

C. Contact the analytical laboratory to ensure that samples arrived safely and instructions for sample analyses are clearly understood.

4. SOURCES

deVera E. R., B. P. Simmons, N. D. Stephen, and D. L. Storm. 1980. "Samplers and Sampling Procedures for Hazardous Waste Streams." U.S. Environmental Protection Agency report EPA-600/2-80-018. Washington, D.C.: U.S. Government Printing Office.

DOI. n.d. "National Handbook of Recommended Methods for Water-Data Acquisition." U. S. Department of the Interior publication. Washington, D.C.

EPA. 1977. "Procedures Manual for Groundwater Monitoring at Solid Waste Disposal Facilities." U.S. Environmental Protection Agency report EPA-530/SW-611, August 1977. Washington, D.C.: U.S. Government Printing Office.

Ford, Patrick J., Paul J. Tarina, and Douglas E. Seely. 1984. "Characterization of Hazardous Waste Sites - A Methods Manual". Vol. II of Available Sampling Methods. 2d ed. U.S. Environmental Protection Agency report EPA/600/4-84/076. Washington, D.C.: U.S. Government Printing Office.

Gibb, J. P., R. M. Schuller, and R. A. Griffin. 1980. "Monitoring Well Sampling and Preservation Techniques." U.S. Environmental Protection Agency report EPA-600/9-80-010, March 1980. Washington, D.C.: U.S. Government Printing Office.

National Council of the Paper Industry for Air and Stream Improvement, Inc. 1982. "A Guide to Groundwater Sampling." National Council for the Paper Industry Technical Bulletin No. 362, January 1982.

Scalf, M. J., J. F. McNabb, W. Dunlap, R. Crosby, and J. Fryberger. 1980. Manual for Groundwater Sampling Procedures. R. S. Kerr Environmental Research Laboratory, Office of Research and Development, Cincinnati, Ohio.

Sisk, S. W. 1981. "NEIC Manual for Ground/Surface Investigations at Hazardous Waste Sites." U.S. Environmental Protection Agency report EPA-330/9-81-002. Washington, D.C.: U.S. Government Printing Office.

5. APPENDIX

5.1. Equipment and Supplies Checklist

APPENDIX 5.1

EQUIPMENT AND SUPPLIES CHECKLIST

_____ Johnson Keck submersible pump

_____ Grumfus submersible pump

_____ Standard reta submersible pump

_____ Red jacket submersible pump

_____ Fultz submersible pump

_____ Alconox

_____ Trash bags

_____ Garden pressure sprayer

_____ Teflon or other chemically inert tubing

_____ Stiff brush

_____ Extension cord

_____ Jumper cables

_____ 12-V DC power source

_____ Tool kit

_____ Sample containers and preservatives

_____ 110-V AC power source

_____ Plastic sheet

_____ Any additional supplies listed in associated procedures, as needed

STANDARD OPERATING PROCEDURE 2.6

SAMPLING MONITORING WELLS WITH A PERISTALTIC PUMP

1. PURPOSE

To collect a representative sample of the groundwater from a shallow well (less than 26 ft deep).

2. DISCUSSION

The Remedial Investigation Plan (RIP) contains specific details about the procedures and equipment for this SOP. Refer to the RIP for the type of samples to be collected. Collection and measurement of samples and documentation of data will be performed as described in the associated procedures.

Peristaltic pumps can be used for sampling in most shallow wells. They require minimal downhole equipment, and cross-contamination can be eliminated by replacing the section tubing between wells. A pump system is recommended when analytical requirements demand sample volumes in excess of one to two liters.

Peristaltic pumps may not be suitable for collecting volatile organics because of possible gas stripping. When sampling for volatile organic species, their use should be supplemented by a positive-displacement bailer, as described in the SOP 2.4, Sampling Monitoring Wells with a Bucket-Type Bailer. Sample collection with the bailer always precedes peristaltic pumping when the two are used in conjunction at a specific sampling location.

3. PROCEDURES

3.1. Associated Procedures

Before every operation, a review of the SOPs 1.1-1.10 is necessary. These SOPs contain information on the performance of field activities. They should be consulted for specific information on equipment and supplies; sample collection, preservation, packaging, and shipping; decontamination procedures; and documentation requirements. Procedures directly associated with this SOP are listed below.

SOP No.	SOP Title
1.1	General Instructions for Field Personnel
1.3	Sample Control and Documentation
1.4	Sample Containers and Preservation
1.5	Guide to the Handling, Packaging, and Shipping of Samples
1.6	General Equipment Decontamination

SOP No.	SOP Title
2.1	Presample Purging of Wells
2.2	Field Measurements on Ground and Surface Water Samples
2.4	Sampling Monitoring Wells with a Bucket-Type Bailer
2.8	Sampling for Volatile Organics
3.1	Water Level Measurement

3.2. Preparation

3.2.1. Office

A. Review the RIP and SOPs listed in Section 3.1.

B. Coordinate schedules/actions with the installation staff.

C. Obtain appropriate permission for property access.

D. Assemble the equipment and supplies listed in Appendix 5.1. Ensure the proper operation of all sampling equipment.

E. Notify the analytical laboratory of sample types, the number of samples, and the approximate arrival date.

F. Contact the carrier that will transport samples to obtain information on regulations and specifications.

3.2.2. Documentation

A. Obtain a logbook from the QA officer.

B. Record results of the equipment check in the logbook.

C. Obtain a sufficient number of the appropriate ER Program data collection forms (see INDEX TO SOPs).

D. Consult the ER Program data administrator for a current list of information management codes, location IDs, and sample numbers used in the completion of data forms.

3.2.3. Field

A. Locate monitoring wells to be sampled and the appropriate decontamination area. If possible, plan to sample from least to most contaminated. Locate staging area and areas for managing purged water and expendable sampling materials. Check decontamination zones and barricades to public access.

B. Decontaminate all sampling equipment before taking the first sample and between sampling intervals (see SOP 1.6, General Equipment Decontamination, and the RIP).

C. Sample monitoring wells from least to most contaminated to reduce the possibility for cross-contamination.

3.3. Operation

3.3.1. Procedure for Operating a Peristaltic Pump

A. Whenever a well is purged or sampled with the bladder pump, record all field measurements and chemistry determinations on the Groundwater Level or the Groundwater Levels and Gasoline Thickness Data form, as well as on the Groundwater Quality Sampling Record form.

   Copies of these forms and instructions for completing the forms are provided in SOP 2.2, Field Measurements on Ground and Surface Water Samples, and SOP 3.1, Water Level Measurement.

B. Unlock the well and use a stiff brush to brush away any dirt or debris from around the well cap. Remove the cap.

C. Use a petroleum detection probe to determine the presence of any floating organics in the wellbore water column. The probe can also be used to determine the total depth of the well and the depth-to-water.

D. Lower the precleaned, water level probe or petroleum detection probe down the well until the indicator sounds (see SOP 3.1, Water Level Measurement). Measure (to the nearest 0.01 ft) the depth-to-water from the mark on the well casing. Record this measurement in the logbook.

E. Purge the well according to SOP 2.1, Presample Purging of Wells.

F. Allow the well to recover to 80% of its initial volume (.8 bore volumes) before sampling. Use the water level probe to monitor well recovery. If a well is not recovering rapidly, the site manager may choose to have the well sampled before the 80% recovery has been achieved.

G. If insufficient recovery is noted, allow additional time to collect samples on a periodic schedule that will allow recovery between sampling.

   NOTE: Whenever a sample is collected, a custody record must be initiated on the Custody Transfer Record/Lab Work Request form and a Water Sample Identification Label affixed to the sample container. SOP 1.3, Sample Control and Documentation, contains copies of the form and label and instructions for completing the form and label.

H. If required, collect volatile organic analysis samples with a positive-displacement bailer and according to SOP 2.4, Sampling Monitoring Wells with a Bucket-Type Bailer.

I. Install a suitable length of suction-line tubing in the peristaltic pump head. The length of tubing selected should be sufficient to reach the proper sampling

position in the well and long enough to ensure that the pump (and filter assembly) can be positioned without hampering the activities of the sampling technician. Attach a stainless steel weight to the downhole end of the tubing. Consider drawdown in the well when selecting the tubing length.

J. Attach the filter assembly to the uphole end of the suction-line tubing, as appropriate. Lower the weighted end of the tubing to the midpoint of the well screen, if known, or below the existing water level.

K. Consider the first liter of liquid collected as a system purge/rinse. If well yield is insufficient for the required analysis, this purge volume may be suitable for some less-critical analysis.

3.3.2. Procedure for Collecting Samples

NOTE: Also consult associated SOPs for information on collecting and measuring samples and documentation of data.

A. Fill the appropriate sample bottles by allowing pump discharge to flow gently down the sides of the bottles with minimal entry turbulence. The order in which the bottles are to be filled may be specified in the RIP. Otherwise, the sampling order should be semivolatile organics, radiological, major ion parameters, and inorganic metals.

B. Allow the pump system to drain and disassemble. Discard the contaminated tubing.

C. Before sampling the next monitoring well, decontaminate sampling equipment according to SOP 1.6, General Equipment Decontamination.

3.4. Postoperation

3.4.1. Field

A. Ensure that all equipment is accounted for, decontaminated (see SOP 1.6, General Equipment Decontamination), and ready for shipment.

B. Restore the site to presampling conditions as specified in the RIP.

C. Make sure all wells are properly labeled and the location ID is readily visible on the guard pipe.

D. Prepare samples and transport according to SOP 1.3, Sample Control and Documentation; SOP 1.4, Sample Containers and Preservation; and SOP 1.5, Guide to Handling, Packaging, and Shipping of Samples.

G. Notify the analytical laboratory of any changes in the number of samples to expect (for example, dry wells).

3.4.2. Documentation

A. Record cleanup procedures and any uncompleted work (like site restoration or long-term monitoring) in the logbook.

B. Complete logbook entries, verify the accuracy of entries, and sign/initial all pages.

C. Review data collection forms for completeness.

3.4.3. Office

A. Deliver original forms and logbooks to the site manager for technical review. He/she will review, sign forms, and transmit to the document control officer (copies to the files) for eventual delivery to the Department of Energy.

B. Inventory equipment and supplies. Repair or replace all broken or damaged equipment. Replace expendable items. Return equipment to the equipment manager and report incidents of malfunction or damage.

C. Contact the analytical laboratory to ensure that samples arrived safely and instructions for sample analyses are clearly understood.

4. SOURCES

Dunlap, W. J., J. F. McNabb, M. R. Scalf, and R. L. Crosby. 1977. "Sampling for Organic Chemicals and Microorganisms in the Subsurface." U.S. Environmental Protection Agency report EPA/600/2-77-176, August 1977. Washington, D.C.: U.S. Government Printing Office.

Ford, Patrick J., Paul J. Turina, Douglas E. Seely. 1984. "Characterization of Hazardous Waste Sites - A Methods Manual." Vol. II of Available Sampling Methods. 2d ed. U.S. Environmental Protection Agency report EPA/600/4-84-076. Washigton, D.C.: U.S. Government Printing Office.

5. APPENDIX

5.1. Equipment and Supplies Checklist

APPENDIX 5.1

EQUIPMENT AND SUPPLIES CHECKLIST

_____ Water level probe

_____ Peristaltic pump and carrying case

_____ Extra pump heads

_____ Suction-line tubing, manufactured from Teflon or other inert compound

_____ Filter apparatus and filter paper

_____ Stainless steel tubing weight

_____ Sample containers and preservatives

_____ Duct tape

_____ Stiff brush

_____ Well keys

_____ Plastic sheet

_____ Any additional supplies listed in associated procedures, as needed

STANDARD OPERATING PROCEDURE 2.7

SAMPLING COMMERCIAL/MUNICIPAL/DOMESTIC WELLS

1. PURPOSE

To define guidelines for field personnel to follow in sampling commercial, municipal, and domestic wells.

2. DISCUSSION

Water samples may be collected from industrial, public, and private water supply wells to support the site characterization of a facility. The Remedial Investigation Plan (RIP) contains site-specific sampling instructions and locations, as well as specific details about the procedures and equipment for this SOP. Refer to the RIP for the analyses that are to be performed. The collection and measurement of samples and documentation of data will be performed as described in the associated procedures.

In most instances, details concerning well installation and development will be either unknown or fragmentary. Procedures for sample collection must be carefully followed and well documented so that any questionable data can be attributed to factors beyond the control of the RIP. Noninert materials in the well and pipes can alter the chemistry of the sample. Therefore, it is important to collect the sample as close to the wellhead as possible (Freeze 1979).

Care must be taken to promote strong community relations with private, public, and industrial neighbors in the vicinity of the facility. Successful completion of well sampling by following an SOP will impress neighbors with the professionalism and quality management of the program. Following properly documented field procedures will ensure that privately owned wells do not become damaged or contaminated through sampling activities.

3. PROCEDURES

3.1. Associated Procedures

Before every operation, a review of the SOPs 1.1-1.10 is necessary. These SOPs contain information on the performance of field activities. They should be consulted for specific information about equipment and supplies; sample collection, preservation, packaging, and shipping; decontamination procedures; and documentation requirements. Procedures directly associated with this SOP are listed below.

SOP No.	SOP Title
1.1	General Instructions for Field Personnel
1.3	Sample Control and Documentation
1.4	Sample Containers and Preservation

SOP No.	SOP Title
1.5	Guide to the Handling, Packaging, and Shipping of Samples
1.6	General Equipment Decontamination
2.1	Presample Purging of Wells
2.2	Field Measurement on Ground and Surface Water Samples
2.6	Sampling Monitoring Wells with a Peristaltic Pump
2.8	Sampling for Volatile Organics
3.1	Water Level Measurement

3.2. Preparation

3.2.1. Office

A. Review the RIP and SOPs listed in Section 3.1.

B. Coordinate schedules/actions with the installation staff.

C. Obtain appropriate permission for property access.

D. Assemble the equipment and supplies listed in Appendix 5.1. Ensure the proper operation of all sampling equipment.

E. Notify the analytical laboratory of sample types, the number of samples, and the approximate arrival date.

F. Contact the carrier that will transport samples to obtain information on regulations and specifications.

3.2.2. Documentation

A. Obtain a logbook from the QA officer.

B. Record results of the equipment check in the logbook.

C. Obtain a sufficient number of the appropriate ER Program data collection forms (see INDEX TO SOPs).

D. Consult the ER Program data administrator for a current list of information management codes, location IDs, and sample numbers used in the completion of data forms.

3.2.3. Field

A. Contact the well owner and set up a time to collect water samples and perform field chemistry measurements. If possible, arrange for commercial, municipal, and domestic wells to be sampled before the monitoring wells.

B. Decontaminate all sampling equipment before taking the first sample and between sampling intervals (see SOP 1.6, General Equipment Decontamination, and the RIP).

3.3. Operation

Consider specific sampling protocol on an individual basis; each sampling well will have a different pump, construction material, pipe, and access point for sample collection. Consult the RIP for specific instructions for each well.

Groundwater samples will be grabbed from a discharge pipe or water faucet. Under no circumstances will the field technician pull a pump or insert a sampling device directly into a well unless specified in the RIP or with documented approval from the site manager.

For collection of groundwater from public and private water supply wells, proceed as outlined below.

3.3.1. Preliminary Arrangements

A. Whenever a well is purged or sampled, record all field measurements and chemistry determinations on either the Groundwater Level or the Groundwater Levels and Gasoline Thickness Data form, as well as the Groundwater Quality Sampling Record form. Copies of these forms and instructions for completing the forms are provided in SOP 3.1, Water Level Measurement, and SOP 2.2, Field Measurements on Ground and Surface Water Samples, respectively.

B. If possible, discuss your activity with the well owner and set up the sampling vehicle in a location that will cause no inconvenience to anyone.

C. Determine if the discharge pipe or water faucet is on a water treatment system of some type (water softener, for example). Note this in the comments section of the Groundwater Quality Sampling Record (see SOP 2.2, Field Measurements on Ground and Surface Water Samples).

D. If possible, take a water level measurement (see SOP 2.1, Water Level Measurement).

E. If well documented, well completion data can be obtained. Calculate the bore volume as described in SOP 2.1, Presample Purging of Wells.

3.3.2. Sampling Procedures

A. Connect the appropriate sampling apparatus (cleaned tubing, connectors, and flow-through bath) to the discharge pipe. Obtain the sample as close as possible to the source and directly from the wellhead when feasible.

B. Set up and calibrate the equipment.

C. Begin withdrawing water from the well. If possible, run the water for at least 10 min to ensure that pipes have been thoroughly flushed. Record the volume of water purged.

D. Perform field measurements according to SOP 2.2, Field Measurements on Ground and Surface Water Samples, and SOP 2.8, Sampling for Volatile Organics.

E. Collect water samples according to SOP 1.4, Sample Containers and Preservation.

NOTE: Whenever a sample is collected, a custody record must be initiated on the Custody Transfer Record/Lab Work Request form and a Water Sample Identification Label affixed to the sample container. SOP 1.3, Sample Control and Documentation, contains copies of the form and label and instructions for completing the form and label.

3.4. Postoperation

3.4.1. Field

A. Ensure that all equipment is accounted for, decontaminated (see SOP 1.6, General Equipment Decontamination), and ready for shipment.

B. Restore the site to presampling conditions and fill open sampling holes as specified in the RIP.

C. Make sure all survey or sampling locations are properly staked and the location ID is readily visible on the location stake.

D. Prepare samples and transport according to SOP 1.3, Sample Control and Documentation; SOP 1.4, Sample Containers and Preservation; and SOP 1.5, Guide to Handling, Packaging, and Shipping of Samples.

3.4.2. Documentation

A. Record cleanup procedures and any uncompleted work (like site restoration or long-term monitoring) in the logbook.

B. Complete logbook entries, verify the accuracy of entries, and sign/initial all pages.

C. Review data collection forms for completeness.

3.4.3. Office

A. Deliver original forms and logbooks to the site manager for technical review. He/she will review, sign forms, and transmit to the document control officer (copies to the files) for eventual delivery to the Department of Energy.

B. Inventory equipment and supplies. Repair or replace all broken or damaged equipment. Replace expendable items. Return equipment to the equipment manager and report incidents of malfunction or damage.

C. Contact the analytical laboratory to ensure that samples arrived safely and instructions for sample analyses are clearly understood.

4. SOURCE

Freeze, R. A., and J. A. Cherry. 1979. Groundwater. Englewood Cliffs, New Jersey: Prentice-Hall, Inc.

5. APPENDIX

5.1. Equipment and Supplies Checklist

APPENDIX 5.1

EQUIPMENT AND SUPPLIES CHECKLIST

_____ Teflon tubing

_____ Pump fittings

_____ Water level probe

_____ Calibrated bucket

_____ Stopwatch

_____ Sample containers and preservatives

_____ Foam sleeves, vermiculite coolers, and Blue Ice (or equivalent)

_____ Plastic sheet

_____ Any additional supplies listed in associated procedures, as needed

STANDARD OPERATING PROCEDURE 2.8

SAMPLING FOR VOLATILE ORGANICS

1. PURPOSE

To outline procedures for collecting a representative groundwater sample and transporting it from its original environment to the laboratory for analysis of trace volatile organics.

2. DISCUSSION

The growing concern over the past several years about low levels of volatile organic compounds in water supplies has led to the development of highly sophisticated analytical methods that can provide detection limits at parts-per-trillion levels. Although laboratory methods are extremely sensitive, well controlled, and quality assured, they cannot compensate for a poorly collected sample. The collection of a sample should be as sensitive, highly developed, and quality assured as the analytical procedures.

A sample to be analyzed for dissolved volatile organics must be collected with minimal disturbance of the sample to limit aeration, which would cause a loss of volatiles from the sample.

Sample retrieval systems suitable for the valid collection of volatile organic samples are positive-displacement bladder pumps; reciprocating piston-type, submersible pumps; gear-driven, submersible pumps; syringe samplers; and bailers (Barcelona 1984; Bennett 1988; Nielsen 1985). Field conditions and other considerations will limit the choice of system. The focus of concern must be to provide a valid sample for analysis, one that has been subjected to the least amount of turbulence possible.

Materials of construction for bladders, pumps, bailers, and tubing are limited to stainless steel, Teflon, and glass. The tendency of organics to leach into and out of many materials makes the selection of materials critical for these trace analyses. The use of plastics, for example, Tygon, must be avoided. There are numerous ways of introducing foreign contaminants into a sample; these must be avoided by following strict sampling procedures and using only trained personnel.

Treatment of the sample with sodium thiosulfate preservative is required only when there is residual chlorine in the water. Residual chlorine could cause free, radical chlorination and change the identity of the original contaminants.

Holding time for the analysis of volatiles is seven days. It is imperative that the samples are shipped or delivered to the analytical laboratory daily. The bottles must be shipped on their sides to aid in maintaining the airtight seal during shipment, with adequate packing and cooling to ensure that they arrive intact. The sensitivity of the analysis and the fragility of the samples require that all volatile samples are collected in duplicate.

The Remedial Investigation Plan (RIP) contains site-specific details about the procedures and equipment for this SOP. Refer to the RIP for the analyses that are to

be performed. Collection and measurement of samples and the documentation of data will be performed as described in the associated procedures.

3. PROCEDURES

3.1. Associated Procedures

Before every operation, a review of the SOPs 1.1-1.10 is necessary. These SOPs contain information on the performance of field activities. They should be consulted for specific information about equipment and supplies; sample collection, preservation, packaging, and shipping; decontamination procedures; and documentation requirements. Procedures directly associated with this SOP are listed below.

SOP No.	SOP Title
1.1	General Instructions for Field Personnel
1.3	Sample Control and Documentation
1.4	Sample Containers and Preservation
1.5	Guide to the Handling, Packaging, and Shipping of Samples
1.6	General Equipment Decontamination
2.1	Presample Purging of Wells
2.2	Field Measurement on Ground and Surface Water Samples
2.3	Sampling Monitoring Wells with a Bladder Pump
2.4	Sampling Monitoring Wells with a Bucket-Type Bailer

3.2. Preparation

3.2.1. Office

A. Review the RIP and SOPs listed in Section 3.1.

B. Coordinate schedules/actions with the installation staff.

C. Obtain appropriate permission for property access.

D. Assemble the equipment and supplies listed in Appendix 5.1. Ensure the proper operation of all sampling equipment.

E. Notify the analytical laboratory of sample types, the number of samples, and the approximate arrival date.

F. Contact the carrier that will transport samples to obtain information on regulations and specifications.

G. Obtain appropriate discharge permits or containment vessels for purged water.

3.2.2. Documentation

A. Obtain a logbook from the QA officer.

B. Record results of the equipment check in the logbook.

C. Obtain a sufficient number of the appropriate ER Program data collection forms (see INDEX TO SOPs).

D. Consult the ER Program data administrator for a current list of information management codes, location IDs, and sample numbers used in the completion of data forms.

3.2.3. Field

A. Locate monitoring wells to be sampled and the appropriate decontamination area. Locate the staging area and areas for managing purged water and expendable sampling materials. Check decontamination zones and barricades to public access.

B. Decontaminate all sampling equipment before taking the first sample and between sampling intervals (see SOP 1.6, General Equipment Decontamination, and the RIP). Perform other sampling tasks before collecting the volatile samples (see SOP 2.1, Presample Purging of Wells; SOP 2.2, Field Measurements on Ground and Surface Water Samples; and SOP 2.8, Sampling for Volatile Organics).

C. Sample monitoring wells from least to most contaminated to reduce the possibility for cross-contamination.

3.3. Operation

3.3.1. Preliminary Determinations

A. Floating Organics. If floating organics are of concern (as determined in the RIP and by field measurement for floating organics), obtain the sample with a bucket-type or bottom-valve bailer (see SOP 2.4, Sampling Monitoring Wells with a Bucket-Type Bailer).

B. Purging. Purge the well before sampling, as specified in the RIP and according to SOP 2.1, Presample Purging of Wells. Ensure that the well was not pumped dry and that high flow rates were not employed to cause turbulence in the formation.

C. Residual Chlorine. Using the Hach Field Test Kit for Chlorine, determine if there is residual chlorine in the water to be sampled. If there is, treat the sample vial with a crystal of sodium thiosulfate before sample collection (see SOP 1.4, Sample Containers and Preservation).

3.3.2. Sample Retrieval

A. Bladder Pumps. Using a nongas, contact positive-displacement bladder pump is often mandated when dedicated pumps have been installed on wells. These bladder pumps are also suitable for shallow wells (less than 100 ft). They are somewhat difficult to clean, but can be used with well-dedicated sample tubing to avoid some cleaning. These pumps require a power supply and a compressed gas supply (or compressor). They may be operated at variable flow and pressure rates, which makes them ideal for both purging and sampling.

1. Increase the cycle time and reduce the pressure to the minimum that will allow the sample to come to the surface.

2. Open both vials, set caps in a clean place, and collect the sample during the middle of the cycle. Collecting both samples at the same time provides more similar samples than those collected at different times, but may be difficult. At a minimum, collect two samples from consecutive discharge cycles.

3. Holding the edge of the sample line at the top edge of the sample vial, allow the water to run down the side into the vial. Do not allow the water to drop or fall into the vial; avoid splashing.

4. Fill the vials just to overflowing. Do not rinse the vials or excessively overflow them. There should be a convex meniscus on the top of the vials.

5. Be sure the caps have not been contaminated (splashed) and carefully cap the vials. Place the caps directly over the top and screw down firmly. Do not overtighten and break the cap.

6. Invert the vials and tap gently. Observe vials for at least 10 sec. If an air bubble appears, discard the sample and begin again. It is imperative that no entrapped air is in the sample vial.

7. Immediately place the vials in the protective foam sleeve and place into the cooler. They should be on their sides, rather than straight up.

8. Ship or deliver samples to the laboratory daily. Ensure that the samples are iced, but do not allow them to freeze.

NOTE: Whenever a sample is collected, a custody record must be initiated on the Custody Transfer Record/Lab Work Request form and a Water Sample Identification Label affixed to the sample container. SOP 1.3, Sample Control and Documentation, contains copies of the form and label and instructions for completing the form and label.

B. Reciprocating Piston-Type, Submersible Pumps. These systems are portable, self-contained, and capable of delivery flow rates of 30 gallons per hour at lifts up to 500 ft. The pump fits into 2-inch wells, which is the most common monitoring well diameter. The flow rate of the pump is varied by increasing or decreasing the driving pressure supplied to the pump from a compressed air container. The gas driving the pump does not contact the sample being purged, making this type of pump the preferred tool to collect samples for

volatile organic analyses in deep wells. The samples are collected as described in steps 2-8 of Section 3.3.2.A.

C. Gear-Driven, Submersible Pumps. These pumps are not as complicated or expensive as the bladder pumps. They provide comparable samples and are often easier to handle and clean than are other pumps. However, they do not have good control of flow rate, and more care must be exercised when sampling with them.

   Collect the sample as described in steps 2-8 of Section 3.3.2.A. Use more care with this kind of a pump because the flow rate is not controllable and there is a greater potential for splashing and aeration of the sample.

D. Syringe Samplers. Only a limited number of commercial, syringe-type samplers are available (two are manufactured by IEA and TIMCO). Although some homemade devices apparently provide good, quality samples for volatile analysis, these devices are severely limited in sample volume and are specific to sampling for volatiles. Essentially, they operate with an evacuated chamber that is lowered down the well and allowed to fill from the pressure of the water. The entire mechanism is then brought to the surface with the sample. The sample can then be transferred to a sample vial, or the entire unit may be sent as the sample container.

   1. If necessary, evacuate the syringe and lower the sampling device to just below the well screen.

   2. Remove the constriction from the device and allow the syringe to fill with sample, applying slight suction.

   3. Bring unit to the surface. If necessary, transfer the sample to vials (see steps 2-8 of Section 3.3.2.A).

E. Bailers. The positive-displacement, volatile-sampling bailer by GPI is the most appropriate bailer to collect water samples for volatile analysis. Other bailer types (messenger and bottom fill) are less desirable, but may be mandated by cost and site considerations. Generally, bailers can provide an acceptable sample, provided that the sampling personnel use extra care in the collection process.

   1. If using the GPI bailer, insert a volatile organic analysis (VOA) vial into the clamp and assemble the unit.

   2. Securely attach the bailer to the cable that is on a reel.

   3. Lower the bailer slowly and gently into the well, taking care not to shake the casing sides or splash the bailer into the water.

   4. Check the reel meter to note the location of the bailer in the well. Stop when the bailer reaches the screened interval.

   5. Retrieve the bailer from the well slowly and gently, avoiding bumping and splashing.

6. Once the bailer reaches the surface, detach the bailer from the cable. Repeat steps 1-6 for the second vial.

7. Carefully open the GPI bailer unit and remove the vial. If using a conventional bailer, skip to the next step. If using a GPI bailer, repeat steps 1-7 to collect the duplicate sample.

8. Begin slowly pouring from the bailer; collect the duplicate samples from the midstream sample.

9. Proceed as described in steps 2-8 of Section 3.3.2.A.

3.4. Postoperation

3.4.1. Field

A. Ensure that all equipment is accounted for, decontaminated (see SOP 1.6, General Equipment Decontamination), and ready for shipment.

B. Restore the site to presampling conditions as specified in the RIP.

C. Make sure all wells are properly labeled and the location ID is readily visible on the protective casing.

D. Prepare samples and transport according to SOP 1.3, Sample Control and Documentation; SOP 1.4, Sample Containers and Preservation; and SOP 1.5, Guide to Handling, Packaging, and Shipping of Samples.

3.4.2. Documentation

A. Record cleanup and hole abandonment procedures and any uncompleted work (like site restoration or long-term monitoring) in the logbook.

B. Complete logbook entries, verify the accuracy of entries, and sign/initial all pages.

C. Review data collection forms for completeness.

3.4.3. Office

A. Deliver original forms and logbooks to the site manager for technical review. He/she will review, sign forms, and transmit to the document control officer (copies to the files) for eventual delivery to the Department of Energy.

B. Inventory equipment and supplies. Repair or replace all broken or damaged equipment. Replace expendable items. Return equipment to the equipment manager and report incidents of malfunction or damage.

C. Contact the analytical laboratory to ensure that samples arrived safely and isntructions for sample analyses are clearly understood.

4. SOURCES

Barcelona, M. J., J. A. Helfrich, E. E. Garske, and J. P. Gibb. 1984. "A Laboratory Evaluation of Groundwater Sampling Mechanisms." Groundwater Monitoring Review, Spring 1984: 32-41.

Barcelona, M. J., J. A. Helfrich, and E. E. Garske. 1985. "Sampling Tubing Effects on Groundwater Samples." Analy. Chem. 57: 460-63.

Nielsen, David M., and Gillian L. Yeates. 1985. "A Comparison of Sampling Mechanisms Available for Small-Diameter Groundwater Monitoring Wells." Groundwater Monitoring Review, Spring 1985: 83-99.

Robert Bennett Co. 1988. " Operation Manual for the Bennett Sampling Pump." Amarillo, Texas.

EPA. 1981. "Manual of Groundwater Quality Sampling Procedures." U.S. Environmental Protection Agency report EPA-600/2-81-160. Washington, D.C.: U.S. Government Printing Office.

EPA. 1982. "Handbook for Sampling and Sample Preservation of Water and Wastewater," U.S. Environmental Protection Agency report EPA-600/4-82-029. Washington, D.C.: U.S. Government Printing Office.

EPA. 1985. "Practical Guide for Groundwater Sampling.: U.S. Environmental Protection Agency report EPA/600/2-85/104, September 1985. Washington, D.C.: U.S. Government Printing Office.

DOE. 1985. "Field Technical Representaive Manual." 2d ed. U.S. Department of Energy, Uranium Mill Tailings Remedial Action Project Office, Albuquerque Operations Office document, June 1985. Albuquerque, New Mexico.

5. APPENDIX

5.1. Equipment and Supplies Checklist

APPENDIX 5.1

EQUIPMENT AND SUPPLIES CHECKLIST

_____ Teflon stainless steel bladder pump

_____ Teflon stainless steel gear-driven submersible pump

_____ Syringe sampler; stainless steel, Teflon, or glass

_____ Teflon stainless steel bailer (positive-displacement or point-retrieval)

_____ Teflon or other chemically inert tubing

_____ Fittings for pump

_____ 40-ml amber glass vials; Teflon-lined septa

_____ Hach field kit for chlorine

_____ $Na_2S_2O_4$ crystals

_____ Foam sleeves, coolers, and Blue Ice (or equivalent)

_____ Cable, reel, and tripod

_____ Air compressor or bottled nitrogen

_____ Plastic sheet

_____ Any additional supplies listed in associated procedures, as needed

3.3. Operation

3.3.1. Maximum Decontamination Measures

The maximum decontamination measures for Level B are described in Appendix 5.5. These measures are guidelines and may be modified according to site-specific conditions.

3.3.2. Modification of Maximum Decontamination Measures

Depending upon site-specific conditions and circumstances, modifications to the maximum decontamination measures may be permissible. Two example situations in which the maximum decontamination measures may be modified are described below.

A. Situation 1--The individual entering the contamination reduction zone is expected to be minimally contaminated. Extremely toxic or skin-corrosive materials are not present. Outer gloves and boot covers are worn. The inner gloves and boots are not contaminated.

   The following decontamination stations described in Appendix 5.5 would be utilized in this situation: Station Numbers 1, 4-8, 10-12, and 15-19.

B. Situation 2--The individual entering the contamination reduction zone is expected to be minimally contaminated. Extremely toxic or skin-corrosive materials are not present. Outer gloves and boot covers are worn. The inner gloves and boots are not contaminated. The individual needs a new air tank and will return to the exclusion zone.

   The following decontamination stations described in Appendix 5.5 would be utilized in this situation: Station Numbers 1, and 4-9.

3.3.3. Minimum Decontamination Measures

The minimum decontamination measures for Level B are described in Appendix 5.6. These measures are only guidelines and may be modified according to site-specific conditions.

3.4. Postoperation

3.4.1. Field

At the completion of field activities, all contaminated wash and rinse water, decontamination solutions, and contaminated articles must be properly disposed of. The disposal must follow installation requirements and any applicable state and federal regulations. The site manager or field team leader is responsible for the safe disposal of contaminated materials. Planning for proper disposal should be included during office preparations before field activities begin.

3.4.2. Documentation

A. Record radiological measurements in the logbook before leaving the site.

B. There are no forms required to document decontamination procedures and the degree of decontamination attained.

3.4.3. Office

All unused or properly decontaminated equipment will be returned to the equipment manager. The equipment manager should be informed of all stock items that need to be ordered to replenish the inventory.

4. SOURCES

NIOSH, OSHA, USCG and EPA. 1985. "Occupational Safety and Health Guidance Manual for Hazardous Waste Site Activities." Prepared by the National Institute for Occupational Safety and Health (NIOSH), Occupational Safety and Health Administration (OSHA), U.S. Coast Guard (USCG), and the U.S. Environmental Protection Agency (EPA). U.S. Department of Health and Human Services, Public Health Service, Centers for Disease Control, NIOSH report, October 1985. Washington, D.C.: U.S. Government Printing Office.

EPA. 1984. "Standard Operating Safety Guides", Environmental Response Branch, Hazardous Response Support Division, Office of Emergency and Remedial Response, U.S. Environmental Protection Agency document, November 1984. Washington, D.C.: U.S. Government Printing Office.

5. APPENDIXES

5.1. Equipment and Supplies for Maximum Decontamination Measures for Level B

5.2. Equipment and Supplies for Minimum Decontamination Measures for Level B

5.3. Maximum Decontamination Layout for Level B Protection

5.4. Minimum Decontamination Layout for Level B Protection

5.5. Maximum Measures for Level B Decontamination

5.6. Minimum Measures for Level B Decontamination

APPENDIX 5.1

EQUIPMENT AND SUPPLIES FOR MAXIMUM DECONTAMINATION MEASURES FOR LEVEL B

Station 1:
a. Various Size Containers
b. Plastic Liners
c. Plastic Drop Cloths

Station 2:
a. Containers (20-30 Gallons)
b. Decon Solution or Detergent Water
c. 2-3 Long-handled, Soft-bristled Scrub Brushes

Station 3:
a. Containers (20-30 Gallons)
or
High-pressure Spray Unit
b. Water
c. 2-3 Long-handled, Soft-bristled Scrub Brushes

Station 4:
a. Containers (20-30 Gallons)
b. Plastic Liners

Station 5:
a. Containers (20-30 Gallons)
b. Plastic Liners
c. Bench or Stools

Station 6:
a. Containers (20-30 Gallons)
b. Plastic Liners

Station 7:
a. Containers (20-30 Gallons)
b. Decon Solution or Detergent Water
c. 2-3 Long-handled, Soft-bristled Scrub Brushes

Station 8:
a. Containers (20-30 Gallons)
or
High-pressure Spray Unit
b. Water
c. 2-3 Long-handled, Soft-bristled Scrub Brushes

Station 9:
a. Air Tanks
b. Tape
c. Boot Covers
d. Gloves

Station 10:
a. Containers (20-30 Gallons)
b. Plastic Liners
c. Bench or Stools
d. Boot Jack

Station 11:
a. Rack
b. Drop Cloths
c. Bench or Stools

Station 12:
a. Table

Station 13:
a. Basin or Bucket
b. Decon Solution
c. Small Table

Station 14:
a. Water
b. Basin or Bucket
c. Small Table

Station 15:
a. Containers (20-30 Gallons)
b. Plastic Liners

Station 16:
a. Containers (20-30 Gallons)
b. Plastic Liners

Station 17:
a. Containers (20-30 Gallons)
b. Plastic Liners

Station 18:
a. Water
b. Soap
c. Small Table
d. Basin or Bucket
e. Field Showers
f. Towels

Station 19:
a. Dressing Trailer Needed in Inclement Weather
b. Tables
c. Chairs
d. Lockers
e. Cloths

Sources: NIOSH, OSHA, USCG and EPA, October 1985.
U.S. EPA, November 1984.

APPENDIX 5.2

EQUIPMENT AND SUPPLIES FOR MINIMUM DECONTAMINATION MEASURES FOR LEVEL B

Station 1:
- a. Various Size Containers
- b. Plastic Liners
- c. Plastic Drop Cloths

Station 2:
- a. Containers (20-30 Gallons)
- b. Decon Solution
- c. Rinse Water
- d. 2-3 Long-handled, Soft-bristled Scrub Brushes

Station 3:
- a. Containers (20-30 Gallons)
- b. Plastic Lines
- c. Bench or Stools

Station 4:
- a. Air Tanks or Masks and Cartridges, Depending Upon the Concentration and Types of Airborne Contamination
- b. Tape
- c. Boot Covers
- d. Gloves

Station 5:
- a. Containers
- b. Plastic Liners
- c. Bench or Stools

Station 6:
- a. Plastic Sheets
- b. Basin or Bucket
- c. Soap and Towels
- d. Bench or Stools

Station 7:
- a. Water
- b. Soap
- c. Tables
- d. Wash Basin or Bucket

Sources: NIOSH, OSHA, USCG and EPA, October 1985.
U.S. EPA, November 1984.

APPENDIX 5.3

MAXIMUM DECONTAMINATION LAYOUT FOR LEVEL B PROTECTION

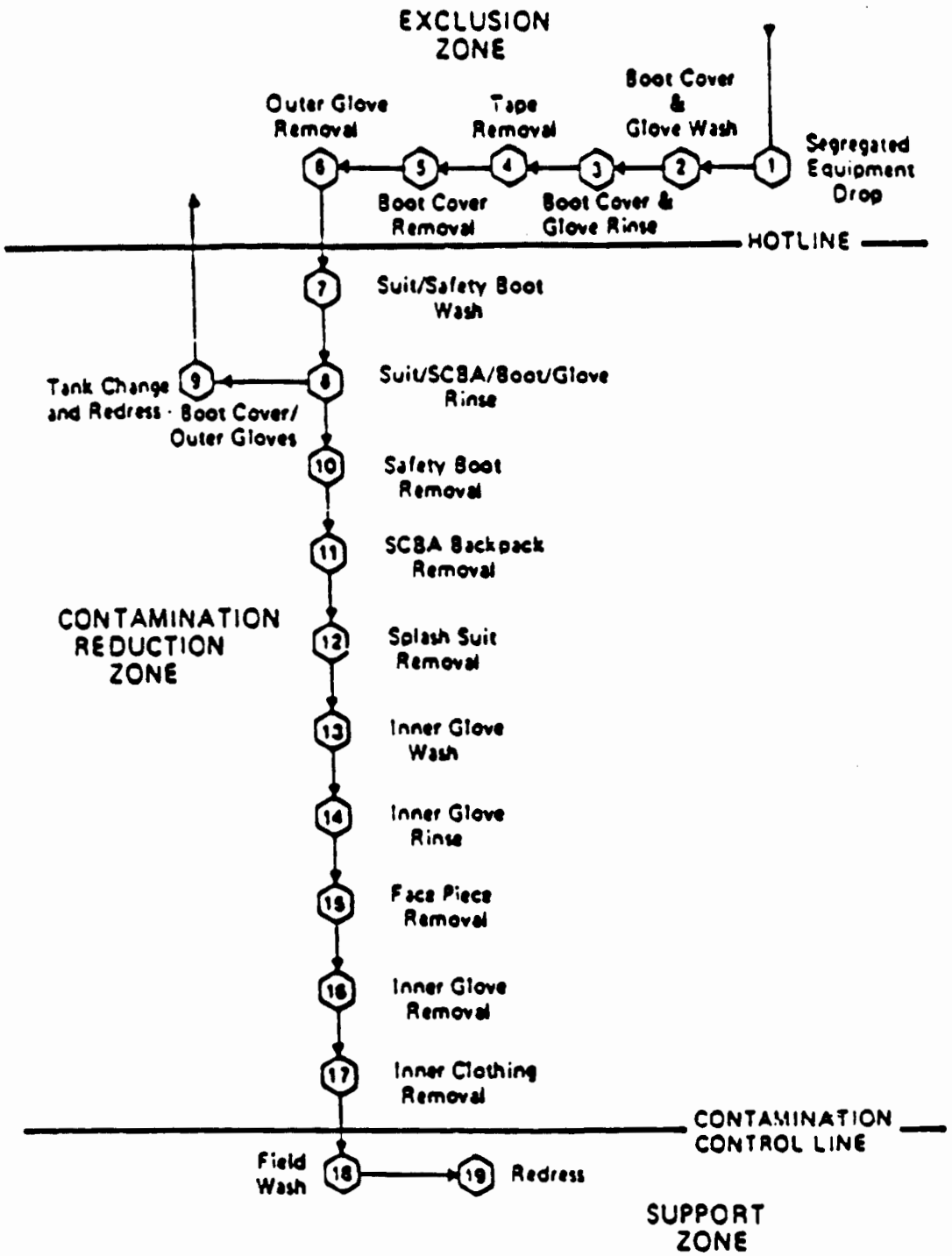

APPENDIX 5.4

MINIMUM DECONTAMINATION LAYOUT FOR LEVEL B PROTECTION

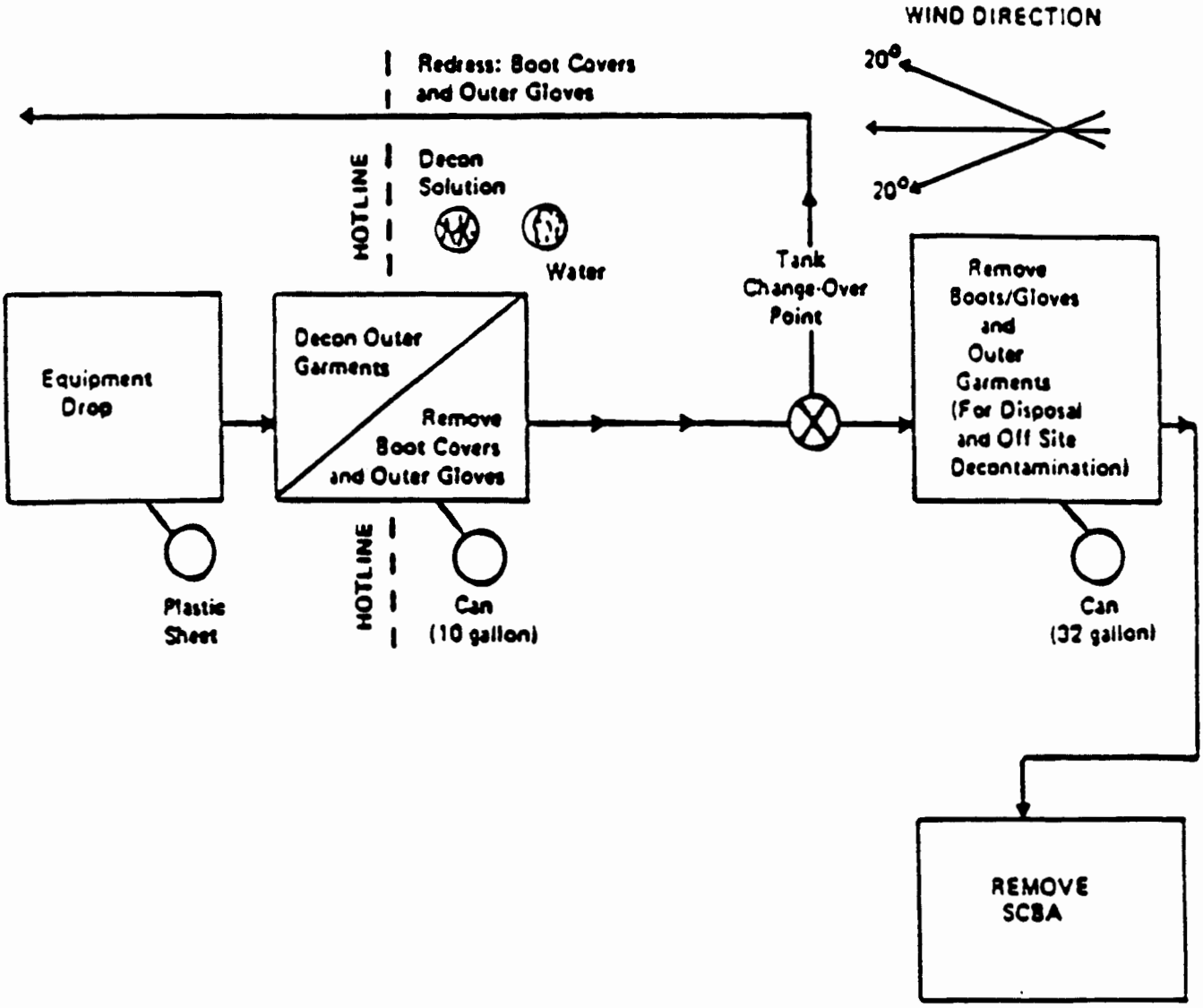

STANDARD OPERATING PROCEDURE 2.9

SURFACE WATER SAMPLING

1. PURPOSE

To define guidelines followed by field personnel in sampling surface water bodies and documenting all aspects of surface water sample collection.

2. DISCUSSION

The sampling of streams, rivers, ponds, and lakes requires care to avoid contamination and collect representative samples.

The preferred method for collecting surface water samples uses a peristaltic pump (Korte and Kearl 1984). The pump system allows the union of the filtration assembly with the pump and the sample container. In this method, surface samples are filtered and collected directly with minimal elapsed time. With a peristaltic pump, only inert materials contact the sample. The inert pump tubing is relatively inexpensive and easily replaced.

An alternate method for this sampling is to collect surface water as grab samples. This method involves dipping a beaker, dipper, or other transfer device into the surface water to retrieve samples. The water sample can also be collected directly by dipping the collection bottle into the water and filling, removing, and capping it. This method has several drawbacks, including problems associated with sampling shallow waters like seeps, springs, or shallow streams. The likelihood of extensive air contact during the filtering of a sample and the time lapse before preservatives are added to samples are also problems. The only advantage of the grab-sample method is the low cost.

The Remedial Investigation Plan (RIP) includes guidelines for selecting sampling equipment and analytical methods to be used at each sampling location. The RIP also has specific details about the procedures for this SOP. Collection and measurement of samples and the documentation of data will be performed as described in the associated procedures.

3. PROCEDURES

3.1. Associated Procedures

Before every operation, a review of the SOPs 1.1-1.10 is necessary. These SOPs contain information on the performance of field activities. They should be consulted for specific information about equipment and supplies; sample collection, preservation, packaging, and shipping; decontamination procedures; and documentation requirements. Procedures directly associated with this SOP are listed below.

SOP No.	SOP Title
1.1	General Instructions for Field Personnel
1.3	Sample Control and Documentation
1.4	Sample Containers and Preservation
1.5	Guide to the Handling, Packaging, and Shipping of Samples
1.6	General Equipment Decontamination
2.1	Presample Purging of Wells
2.2	Field Measurement on Ground and Surface Water Samples
2.6	Sampling Monitoring Wells with a Peristaltic Pump
2.8	Sampling for Volatile Organics

3.2. Preparation

3.2.1. Office

A. Review the RIP and SOPs listed in Section 3.1.

B. Coordinate schedules/actions with the installation staff.

C. Obtain appropriate permission for property access.

D. Assemble the equipment and supplies listed in Appendix 5.1. Ensure the proper operation of all sampling equipment.

E. Notify the analytical laboratory of sample types, the number of samples, and the approximate arrival date.

F. Contact the carrier that will transport samples to obtain information on regulations and specifications.

3.2.2. Documentation

A. Obtain a logbook from the QA officer.

B. Record results of the equipment check in the logbook.

C. Obtain a sufficient number of the appropriate ER Program data collection forms (see INDEX TO SOPs).

D. Consult the ER Program data administrator for a current list of information management codes, location IDs, and sample numbers used in the completion of data forms.

3.2.3. Field

A. Locate sampling sites along the surface water body and the appropriate decontamination area. Check decontamination zones and barricades to public access.

B. Locate a docking area for the boat, when appropriate.

C. Decontaminate all sampling equipment before taking the first sample and between sampling intervals (see SOP 1.6, General Equipment Decontamination, and the RIP).

3.3. Operation

3.3.1. Surface Water Sampling with a Peristaltic Pump

A. Whenever a sample is collected, record all field measurements and chemistry determinations on the Surface Water Quality Sampling Record form. A copy of the form and instructions for completing the form are provided in SOP 2.2, Field Measurements on Ground and Surface Water Samples.

B. Refer to the general discussion about the operation of peristaltic pumps in SOP 2.1, Presample Purging of Wells, and SOP 2.6, Sampling Monitoring Wells with a Peristaltic Pump.

C. To collect a sample, use the procedure outlined below.

1. Attach tubing to peristaltic pump.

2. Lower intake into surface water and begin water removal. Collect or dispose of water in an acceptable container, as specified in the RIP.

3. Record amount of water removed and discharge rates. A calibrated bucket and stopwatch are commonly used for this step.

4. If possible, remove enough surface water to ensure that field chemistry parameters are stabilized. Refer to SOP 2.2, Field Measurements on Ground and Surface Water Samples.

5. Perform final field measurements (see SOP 2.2, Field Measurements on Ground and Surface Water Samples).

6. Sampling surface water tends to clog filters rapidly. Attach clean filter (if applicable) and prepare to collect raw water samples into empty bottles.

   NOTE: If filtering is required, run a few hundred milliliters (ml) of raw water through the filter before filling the sample bottles.

7. Fill the sample bottle, allowing the sample stream to flow gently down the side of the bottle with minimal entry turbulence. Do not allow dirt or

dust to blow into the bottle or bottle cap. Shield bottles or bottle cap, as necessary, to eliminate entry of windblown material.

8. Rinse the inside of the bottle cap with raw water (using a Teflon-lined cap, if applicable). Screw the cap onto bottle tightly and shake the bottle if a preservative (for example, HNO_3, H_2SO_4, or HCl) has been added.

9. Immediately put the samples requiring refrigeration into an insulated cooler with Blue Ice or the equivalent. Put all other samples into a box and keep away from direct sunlight. For additional instructions, refer to SOP 5.4, Sample Containers and Preservation.

NOTE: Whenever a sample is collected, a custody record must be initiated on the Custody Transfer Record/Lab Work Request form and a Water Sample Identification Label affixed to the sample container. SOP 1.3, Sample Control and Documentation, contains copies of the form and label and instructions for completing the form and label.

3.3.2. Surface Water Sampling with a Transfer Device

A. Collect grab samples with a transfer device constructed of inert material like Teflon or stainless steel. Use the transfer device to transfer liquid and liquid wastes from surface waters to a sample bottle. This method prevents unnecessary contamination that would result if the outer surface of the sample bottle were directly immersed in the liquid. In general, field personnel must avoid using metal transfer devices for trace-metal analysis or plastic devices for sampling trace organics.

B. Use the transfer device in some sampling situations unless aeration must be avoided or significant material could be lost through adhesion to the transfer container.

C. Base the exact sampling location and number of grab samples obtained on the known tendency of waste to mix slowly in surface water (Korte and Kearl 1984). The site manager or field personnel should designate the number of samples to be gathered and the sampling locations.

D. To collect a sample, follow the procedure outlined below.

1. Rinse a carboy container several times with distilled water before introducing the sample.

2. Use the transfer device to fill the carboy slowly. Make sure the sample stream flows gently down the sidewall. For samples some distance offshore, an extension device might be required. If so, firmly attach the transfer device to the dipper and tighten all bolts.

3. Record the amount of water removed.

4. Perform field chemistry on raw water in the carboy (see SOP 2.2, Field Measurements on Ground and Surface Water Samples).

5. Perform steps 5-9 in Section 3.3.1.C (Surface Water Sampling with a Peristaltic Pump).

6. When collecting a sample from a frozen body of water, a carboy may not be effective because of its narrow mouth. In that event, use an appropriate receptacle and document its use in the logbook. The procedure for this kind of sampling is described below.

   a. Rinse the receptacle with distilled water.

   b. Grab or cut pieces of ice and fill the carboy or receptacle. If necessary, crush ice to fit.

   c. Prepare the sample as described in the procedures for surface sampling with a transfer device.

7. If the raw water is collected directly into the collection bottle, add preservatives after the sample is collected. Rinse the bottle thoroughly and shake it if a preservative (for example, HNO_3, HCL, or H_2SO_4) has been added.

8. Consult the RIP for specific instructions for filtering or preserving the sample in the field. Store the sample immediately according to the proper procedures (see SOP 1.4, Sample Containers and Preservation).

NOTE: Whenever a sample is collected, a custody record must be initiated on the Custody Transfer Record/Lab Work Request form and a Water Sample Identification Label affixed to the sample container. SOP 1.3, Sample Control and Documentation, contains copies of the form and label and instructions for completing the form and label.

3.4. Postoperation

3.4.1. Field

A. Ensure that all equipment is accounted for, decontaminated (see SOP 1.6, General Equipment Decontamination), and ready for shipment.

B. Place a permanent reference (sampling point) marker (for example, a wooden or metal stake with flagging that includes the location and site code) as close to the sampling location as possible.

3.4.2. Documentation

A. Record cleanup procedures and any uncompleted work (like site restoration or long-term monitoring) in the logbook.

B. Complete logbook entries, verify the accuracy of entries, and sign/initial all pages.

C. Review data collection forms for completeness.

3.4.3. Office

A. Deliver original forms and logbooks to the site manager for technical review. He/she will review, sign forms, and transmit to the document control officer (copies to the files) for eventual delivery to the Department of Energy.

B. Inventory equipment and supplies. Repair or replace all broken or damaged equipment. Replace expendable items. Return equipment to the equipment manager and report incidents of malfunction or damage.

C. Contact the analytical laboratory to ensure that samples arrived safely and instructions for sample analyses are clearly understood.

4. SOURCES

Berg, E. L. 1982. "Handbook for Sampling and Sample Preservation of Water and Wastewaters." U.S. Environmental Protection Agency report EPA/600/4-82/029, September 1982. Washington, D.C.: U.S. Government Printing Office.

EPA. 1979. "Methods of Chemical Analysis of Water and Wastes." U.S. Environmental Protection Agency report EPA-600/4-79-020. Washington, D.C.: U.S. Government Printing Office.

Korte, N., and P. Kearl. 1984. "Procedures for the Collection and Preservation of Ground-water and Surface Water Samples and for the Installation of Monitoring Wells." Bendix Field Engineering Corporation report, Grand Junction, Colorado.

5. APPENDIX

5.1. Equipment and Supplies Checklist

APPENDIX 5.1

EQUIPMENT AND SUPPLIES CHECKLIST

_____ Peristaltic pump

_____ Filtration unit

_____ Teflon bore and fittings

_____ Clean filters and prefilters

_____ Transfer device for grab samples

_____ 2 or 5-gallon carboy container

_____ Wooden stakes

_____ Survey flagging

_____ Plastic or Teflon bucket

_____ Stopwatch

_____ Sample containers and preservatives

_____ Blue Ice or equivalent

_____ Any additional supplies listed in associated procedures, as needed

STANDARD OPERATING PROCEDURE 3.1

WATER LEVEL MEASUREMENT

1. PURPOSE

To determine the depth-to-water in an open borehole, cased borehole, monitoring well, or potentiometer.

2. DISCUSSION

The Remedial Investigation Plan (RIP) for the site contains specific details about the procedures, equipment, and frequency of measurements for this SOP. The documentation of water level measurements, air quality for the health and safety of field personnel, and equipment calibration will be performed as described in the associated procedures.

Generally, water level measurements from boreholes, potentiometers, or monitoring wells are used to construct potentiometric surface maps. Therefore, water level measurements at a given site should be collected within a 24-hr period. Under the following conditions, all measurements must be taken within a shorter interval.

- A range of observed changes between wells that is too large to be indicative of natural gradient groundwater
- Drastic atmospheric pressure changes
- Tidally influenced aquifers
- Aquifers affected by river stage, impoundments, or unlined ditches
- Aquifers stressed by intermittent pumping of production wells
- Aquifers being actively recharged because of precipitation event

The device used to measure water levels should be adequate to attain an accuracy of 0.01 ft. Generally acceptable devices are listed below.

- Steel tape
- An electric sounder
- A petroleum product probe
- A reflection sounder
- A transducer
- An airline

Place a survey mark on the casing as a reference measuring point. The mark should be permanent; a groove cut with a file is recommended. Mark another measuring reference on the grout apron and guard pipe. Document the measuring point in the logbook and on the data form.

Allow water levels in potentiometers and monitoring wells to stabilize for a minimum of 24 hrs after well construction and development before measurements are taken. Recovery may take longer in wells completed in tight formations.

3. PROCEDURES

3.1. Associated Procedures

Before every operation, a review of the SOPs 1.1-1.10 is necessary. These SOPs contain information on the performance of field activities. They should be consulted for specific information about equipment and supplies; sample collection, preservation, packaging, and shipping; decontamination procedures; and documentation requirements. Procedures directly associated with this SOP are listed below.

SOP No.	SOP Title
1.1	General Instructions for Field Personnel
1.6	General Equipment Decontamination
3.3	Operational Check of Pressure Transducers Used in Measuring Water Levels in Wells
6.1	Health and Safety Monitoring of Combustible Gas Levels
6.2	Health and Safety Monitoring of Organic Vapors with a Photoionization Detector
6.3	Health and Safety Monitoring of Organic Vapors with a Flame Ionization Detector

3.2. Preparation

3.2.1. Office

A. Review the RIP and SOPs listed in Section 3.1.

B. Coordinate schedules/actions with the installation staff.

C. Obtain appropriate permission for property access.

D. Assemble the equipment and supplies listed in Appendix 5.1. Ensure the proper operation of all sampling equipment. Be sure the water level measuring device has been calibrated.

E. Contact the carrier that will transport samples to obtain information on regulations and specifications.

3.2.2. **Documentation**

A. Obtain a logbook from the QA officer.

B. Record results of the equipment check in the logbook.

C. Obtain a sufficient number of the appropriate ER Program data collection forms (see INDEX TO SOPs).

D. Consult the ER Program data administrator for a current list of information management codes, location IDs, and sample numbers used in the completion of data forms.

E. Record the most recent calibration date for the water level measuring device in the logbook.

3.2.3. **Field**

A. Locate monitoring wells to be measured and the appropriate decontamination area. Check decontamination zones and barricades to public access.

B. Decontaminate all sampling equipment before taking the first measurement and between measurement intervals (see SOP 1.6, General Equipment Decontamination, and the RIP).

C. When taking a number of water level measurements, it is preferable to start at those wells that are the least contaminated and proceed to those wells that are the most contaminated.

3.3. **Operation**

A. Whenever a water level is measured, enter a description of the sampling location and record of the measured value onto the Groundwater Level Data (Appendix 5.2) or the Groundwater Levels and Gasoline Thickness Data (Appendix 5.3) form. Use the latter when a petroleum or gasoline product is floating on the static water in the well. Fill out the forms as described in Appendix 5.4, Data Form Completion.

B. Place equipment on a Teflon or plastic sheet.

C. Remove locking well cap. Note the location, time of day, and date in the logbook and on the appropriate data form.

D. Remove the well casing cap.

E. If required by site-specific conditions, monitor the headspace of the well with a photoionization detector or a flame ionization detector to determine the presence of volatile organic compounds and record the measurements in the logbook or on appropriate forms. For the use of air monitoring instruments, see SOP 6.1, Health and Safety Monitoring of Combustible Gas Levels; SOP 6.2, Health and Safety Monitoring of Organic Vapors with a Photoionization Detector; and SOP 6.3, Health and Safety Monitoring of Organic Vapors with a Flame Ionization Detector.

F. Lower an electric, water level measuring device or equivalent (for instance, permanently installed transducers or airline) into the well until the water surface is encountered.

G. Measure the distance from the water surface to the reference measuring point on the well casing and record this distance in the logbook and on the data form in the comments column. If the well casing is damaged, measure from some other permanently fixed structure or the ground surface and note this modification in the logbook and data form.

H. Measure depth-to-water at least twice or until results are reproduced and record each measurement in the logbook and in the comments column of the data form. Record the reproduced measurement in the depth-to-water column on the field form.

I. Remove all downhole equipment; replace the well casing cap and locking steel caps.

J. Rinse all downhole equipment and store for transport to the decontamination area.

K. Note any physical changes (like erosion or cracks) in the protective concrete pad or variation in the total depth of the well in the logbook.

L. If using pressure transducers to measure water levels, refer to SOP 3.3, Operational Check of Pressure Transducers Used in Measuring Water Levels in Wells.

3.4. Postoperation

3.4.1. Field

A. Ensure that all equipment is accounted for, decontaminated (see SOP 1.6, General Equipment Decontamination), and ready for shipment.

B. Restore the site to presampling conditions as specified in the RIP.

C. Make sure the monitoring well is labeled or the borehole is properly staked and the location ID is readily visible on the location stake or protective casing.

D. Prepare samples and transport according to SOP 1.3, Sample Control and Documentation; SOP 1.4, Sample Containers and Preservation; and SOP 1.5, Guide to Handling, Packaging, and Shipping of Samples.

3.4.2. Documentation

A. Record cleanup and hole abandonment procedures and any uncompleted work (like site restoration or long-term monitoring) in the logbook.

B. Complete logbook entries, verify the accuracy of entries, and sign/initial all pages.

C. Review data collection forms for completeness.

3.4.3. <u>Office</u>

A. Deliver original forms and logbooks to the site manager for technical review. He/she will review, sign forms, and transmit to the document control officer (copies to the files) for eventual delivery to the Department of Energy.

B. Inventory equipment and supplies. Repair or replace all broken or damaged equipment. Replace expendable items. Return equipment to the equipment manager and report incidents of malfunction or damage.

C. Contact the analytical laboratory to ensure that samples arrived safely and instructions for sample analyses are clearly understood.

4. SOURCE

EPA. 1986. "RCRA Groundwater Monitoring Technical Enforcement Guidance Document.: U.S. Environmental Protection Agency unnumbered document. Washington, D.C.: U.S. Government Printing Office.

5. APPENDIXES

5.1 Equipment and Supplies Checklist

5.2 Groundwater Level Data Form

5.3 Groundwater Levels and Gasoline Thickness Data Form

5.4 Data Form Completion

APPENDIX 5.1

EQUIPMENT AND SUPPLIES CHECKLIST

_____ Site map showing well locations

_____ Steel tape and blue surveyor's chalk

_____ Electric sounder

_____ Reflection sounder

_____ Transducer and data logger

_____ Airline

_____ Petroleum product detection probe

_____ Plastic or Teflon sheeting

_____ Decontamination solutions

_____ Keys to well locks

_____ Tape measure graduated in 0.01 ft

_____ Nonwater-soluble black ink pens

APPENDIX 5.2

GROUNDWATER LEVEL DATA FORM

GROUNDWATER LEVEL DATA

PAGE ____ OF ____

FACILITY CODE _____ LOGGER CODE _____

LOG DATE _____ ACCEPTANCE CODE _____

LOCATION ID	LOG TIME (HH:MM)	DEPTH TO WATER (FT) *	COMMENTS

* MEASUREMENT REFERENCE POINT FROM ☐ TOP OF GROUND OR ☐ TOP OF CASING

ACCEPTANCE CODES: A–ACCEPTABLE R–RECONNAISSANCE U–UNACCEPTABLE N–NOT DETERMINED

COMPLETE BOLDED DATA FOR ENTRY INTO TIMS

CWD–012 (1/88)

FORM COMPLETED BY/DATE _____ TECHNICAL REVIEWER/DATE _____

APPENDIX 5.3

GROUNDWATER LEVELS AND GASOLINE THICKNESS DATA FORM

GROUNDWATER LEVELS AND GASOLINE THICKNESS DATA

FACILITY CODE _____ LOGGER CODE _____

LOG DATE _____ TYPE OF PROBE _____

ACCEPTANCE CODE _____

LOCATION ID	LOG TIME (HH:MM)	DEPTH TO WATER (FT) *	DEPTH TO GAS (FT)	COMMENTS

*MEASUREMENT REFERENCE POINT FROM ☐ TOP OF GROUND OR ☐ TOP OF CASING

ACCEPTANCE CODES: A–ACCEPTABLE R–RECONNAISSANCE U–UNACCEPTABLE N–NOT DETERMINED

TYPES OF PROBES: ROD–TEFLON ROD WITH PASTE OWI–OIL WATER INTERFACE PROBE OTH–OTHER (SPECIFY)

COMPLETE BOLDED DATA FOR ENTRY INTO TIMS
OWG–646 (1/88)

_____ FORM COMPLETED BY/DATE

_____ TECHNICAL REVIEWER/DATE

APPENDIX 5.4

DATA FORM COMPLETION

Use a pen with black ink that is not water soluble (not a felt-tip pen). Make an entry in each blank. Where there is no data entry, enter UNK for Unknown, NA for Not Applicable, or ND for Not Done. If any procedure was not performed as prescribed, give the reason for the change or omission on the form. To change an entry, draw a single line through it, add the correct information above it, and initial the change.

GROUNDWATER LEVEL DATA FORM

1. Facility Code. Five-character code abbreviating the facility name where program activity is being conducted. The first three characters indicate the facility, and the remaining two numbers designate the specific site within the facility.

2. Logger Code. Three-character code identifying the company responsible for performing field measurements.

3. Log Date. The date when the measurement was made in the format DD-MMM-YY (01-JAN-88).

4. Acceptance Code. One-character code assigned by the installation manager.

5. Location ID. Four-character code assigned sequentially to each borehole, test pit, or surface location where chemical, biological, radiological, and other measurements are taken.

6. Log Time. Using the 24-hr clock, time when the water level measurement was recorded. Must be in the format of hours:minutes.

Conversion Table

Conventional Time	24-Hour Time
1:00 a.m.	1:00
12:00 Noon	2:00
1:00 p.m.	13:00
2:00 p.m.	14:00
3:00 p.m.	15:00
4:00 p.m.	16:00
5:00 p.m.	17:00
6:00 p.m.	18:00
7:00 p.m.	19:00
8:00 p.m.	20:00
9:00 p.m.	21:00
10:00 p.m.	22:00
11:00 p.m.	23:00
12:00 Midnight	24:00

7. Depth-to-Water. The water level measurement in feet, tenths of feet, or hundredths of feet, depending on instructions provided in the RIP.

8. Measuring Reference Point. Inscribe, ink, or paint a permanently marked measuring point on the PVC well casing from where all water level measurements for individual wells should be measured. This provides consistency in future water level measurements. If the measuring point is missing, record the water level relative to the ground surface, but mark the casing at the point the measurement was made. Record the distance from the new mark to the ground surface on the data form and in the logbook and describe the new measuring point in the comments column of the data form.

9. Comments. Any additional information.

GROUNDWATER LEVELS AND GASOLINE THICKNESS DATA FORM

Items 1 through 9 of the Groundwater Level Data form also apply to this form. In addition, use the following instructions that are unique to investigations where a gasoline (or other petroleum) product is floating on the water in the well.

1. Depth-to-Gas. The level measurement in feet, tenths of feet, or hundredths of feet, depending on instructions provided in the Remedial Investigation Plan (RIP).

2. Type of Probe. The manufacturer's name and serial number (if available) of the petroleum probe being used.

STANDARD OPERATING PROCEDURE 3.2

AQUIFER (SLUG) TESTING

1. PURPOSE

To define field procedures to collect data for the determination of saturated hydraulic conductivity under *in situ* conditions by the slug test method of analysis.

2. DISCUSSION

A slug test measures the artificial fluctuation of the groundwater level in a well over time due to the injection or withdrawal of a mass (slug) beneath the groundwater surface. The primary advantages of using slug tests to estimate conductivities are: (a) estimates can be made *in situ* and errors incurred in the laboratory testing of disturbed samples can be avoided; (b) tests can be performed quickly at relatively low costs because a pumping well and observation wells are not required; and (c) the hydraulic conductivity of small, discrete portions of an aquifer can be estimated (for example, sand layers in a clay). Limitations of slug testing include: (a) only the hydraulic conductivity of the area immediately surrounding the well is estimated, which may not be representative of the average hydraulic conductivity of the area; (b) certain assumptions made in the analysis process; if the assumptions are inappropriate for the geologic conditions at the site, the slug test data are invalid; (c) the storage coefficient, S, usually cannot be determined; and (d) data sufficient for analysis may not be collected if the hydraulic conductivity is relatively high.

The Remedial Investigation Plan (RIP) for the site contains specific details about the procedures and equipment for this SOP. Refer to the RIP for the locations of the wells that are to be tested. Collection, measurement, and documentation of slug tests will be performed as described in the associated procedures.

3. PROCEDURES

3.1. Associated Procedures

Before every operation, a review of the SOPs 1.1-1.10 is necessary. These SOPs contain information on the performance of field activities. They should be consulted for specific information on equipment and supplies; sample collection, preservation, packaging, and shipping; decontamination procedures; and documentation requirements. Procedures directly associated with this SOP are listed below.

SOP No.	SOP Title
1.1	General Instructions for Field Personnel
1.6	General Equipment Decontamination
3.1	Water Level Measurement

SOP No.	SOP Title
3.3	Operational Check of Pressure Transducers Used in Measuring Water Levels in Wells

3.2. Preparations

3.2.1. Office

A. Review the RIP and SOPs listed in Section 3.1.

B. Coordinate schedules/actions with the installation staff.

C. Obtain appropriate permission for property access.

D. Assemble the equipment and supplies listed in Appendix 5.1. Ensure the proper operation of all sampling equipment.

E. Contact the carrier that will transport samples to obtain information on regulations and specifications.

F. If data-logging equipment will be used, ensure that it is fully charged and the pressure transducer is functioning.

3.2.2. Documentation

A. Obtain a logbook from the QA officer.

B. Record results of the equipment check in the logbook.

C. Obtain a sufficient number of the appropriate ER Program data collection forms (see INDEX TO SOPs).

D. Consult the ER Program data administrator for a current list of information management codes and location IDs used in the completion of data forms.

3.2.3. Field

A. Locate the monitoring wells to be tested and appropriate decontamination areas.

B. Connect cables and power to the data logger and accessory equipment.

C. Decontaminate the transducer and cable as specified in the Sampling Plan and SOP 1.6, General Equipment Decontamination.

D. Make an initial water level measurement on monitoring wells (see SOP 3.1, Water Level Measurement).

E. Before beginning the slug test, enter the required information into the electronic data logger. The type of information may vary, depending on the model used. When using different models, consult the operator's manual for the proper data-entry sequence to be used. The following example shows data entered into the Enviro-Labs Model DL-120-MCP Data Logger.

1. Baud Rate

2. Station ID

3. Date (YY/MM/DD)

4. Time (HH:MM:SS)

5. Scale Factors for Each Channel

6. Set Transducer Depth

7. Set Logging Sequence

3.3. Operation

The following general procedures should be used to collect and report slug test data. The procedures required for a particular slug test may vary slightly from those described, depending on site-specific conditions. Modifications to the test procedures will be contained in the RIP.

The time required for a slug test is a function of the volume of the slug, the hydraulic conductivity of the formation, and the type of well completion. The slug volume should be large enough that a sufficient number of water level measurements can be made before the water level returns to equilibrium conditions. The length of the test may range from less than a minute to several hours.

If the well is to be used as a monitoring well, take precautions so that the contamination does not occur through material introduced into the well. If water is added to the monitoring well, obtain it from an uncontaminated source and transport it in a clean container. Clean bailers or measuring devices before the test. If tests are performed on more than one monitoring well, avoid cross-contamination of the wells.

Conduct slug tests on relatively undisturbed wells. If a test is conducted on a well that has recently been pumped for water-sampling purposes, the measured water level must be within 0.1 ft of the water level before sampling. At least one week should elapse between the drilling of a well and the performance of a slug test.

NOTE: Make an initial water level measurement on monitoring wells before performing the slug test (see SOP 3.1, Water Level Measurement).

3.3.1. <u>Slug Test with Pressure Transducer and Data Logger</u>

Procedures for conducting a slug test with a pressure transducer and data logger are described below.

When the slug test is performed with an electronic data logger and pressure transducer, store all data internally or on computer diskettes or tape. The information will be transferred directly to the main computer and analyzed. Maintain a computer printout of the data in the files as documentation.

A. Determine the static water level in the well, measuring the depth-to-water periodically for several minutes and taking the average of the readings (see SOP 3.1, Water Level Measurement).

B. Cover sharp edges of the well casing with duct tape to protect the transducer cables.

C. Install the transducer and cable in the well below the target drawdown estimated for the test, but at least 2 ft from the bottom of the well. Be sure this depth of submergence is within the design range stamped on the transducer. Temporarily tape the transducer cable to the well to keep the transducer at a constant depth.

D. Connect the transducer cable to the electronic data logger.

E. Enter the initial water level and transducer design range into the recording device according to the manufacturer's instructions. The transducer design range will be stamped on the side of the transducer. Record the initial water level on the recording device.

F. Slowly lower the slug into the well. The point where the slug contacts the water can be detected by observing the transducer readout. After touching the water, raise the slug slightly.

G. Begin taking data on the electronic logger and lower the slug smoothly to displace and raise the water level. Allow the water level to restabilize and remove the cylinder. It is important to remove or add the volumes as quickly and smoothly as possible, because the analysis assumes that an instantaneous change in volume is created in the well.

H. Continue measuring and recording depth-time measurements until the water level returns to equilibrium conditions or a sufficient number of readings have been made to clearly show a trend on a plot recovery versus the logorithm of time.

I. Remove the slug and repeat the date collection portions of steps G and H.

3.3.2. Slug Test with Water Level Probe

The procedure for conducting a slug test with a water level probe is described below. If the slug test data are collected and recorded manually, record observations on the Slug Test Data form. A copy of this form is in Appendix 5.2. Fill out the form as described in Appendix 5.3.

A. Determine the static water level in the well, measuring the depth-to-water periodically for several minutes and taking the average of the readings (see SOP 3.1, Water Level Measurements).

NOTE: When measuring water level changes, it is important to take the measurements rapidly for accurate results.

B. Cover sharp edges of the well casing with duct tape to protect the transducer cables.

C. Slowly lower the slug into the well. The point where the slug contacts the water can be detected by observing the transducer readout. After touching the water, raise the slug slightly.

D. Measure and record the depth-to-water and the time at each reading. The moment when volume is added or removed is Time Zero. Depths should be measured to the nearest 0.01 ft. The number of depth-time measurements necessary to complete the test varies. It is critical to take as many measurements as possible in the early part of the test. Determine the number and intervals between measurements from previous aquifer tests or evaluations.

E. Continue measuring and recording depth-time measurements until the water level returns to equilibrium conditions or a sufficient number of readings have been made to clearly show a trend on a plot recovery versus the logorithm of time.

F. Remove the slug and repeat the date collection portions of steps G and H.

3.4. Postoperation

3.4.1. Field

A. Decontaminate the downhole equipment according to SOP 1.6, General Equipment Decontamination. Cut off contaminated portions of rope and dispose of them.

B. If using an electronic data logger, follow the steps listed below.

1. Stop the logging sequence.

2. Print the data or send to the computer by telephone.

3. Save memory and disconnect the battery at the end of the day's activities.

C. Replace testing equipment in storage containers.

D. Restore the site to testing conditions as specified in the RIP.

E. Make sure all wells are properly labeled and the location ID is readily visible on the protective casing.

3.4.2. Documentation

A. Record cleanup procedures and any uncompleted work (like site restoration or long-term monitoring) in the logbook.

B. Complete logbook entries, verify the accuracy of entries, and sign/initial all pages.

C. Review data collection forms for completeness.

3.4.3. Office

A. Deliver original forms and logbooks to the site manager for technical review. He/she will review, sign forms, and transmit to the document control officer (copies to the files) for eventual delivery to the Department of Energy.

B. Inventory equipment and supplies. Repair or replace all broken or damaged equipment. Replace expendable items. Return equipment to the equipment manager and report incidents of malfunction or damage.

C. Interpret slug test field results with the project hydrogeologist or site manager. Analyze slug test results, using appropriate software packages or graphical solutions.

D. If necessary, send data logger or pressure transducers to the factory for recalibration.

4. SOURCES

Bouwer, H. 1978. Groundwater Hydrology. New York: McGraw-Hill Book Company.

Bouwer, H., and R. C. Rice. 1980. "A Slug Test for Determining the Hydraulic Properties of Tight Formations." Water Resources Research 16, no. 1: 233-38.

Cooper, Jr., H. H., J. D. Bredehoeft, and S. S. Papadopulos. 1967. "Response of a Finite-Diameter Well to an Instantaneous Charge of Water." Water Resources Research 13, no. 1.

DOI. n.d. "Ground Water Manual." U.S. Department of the Interior publication. Washington, D.C.: U.S. Government Printing Office.

Earlougher, R.C. 1977. Advances in Well Test Analysis. Houston, Texas: Society of Petroleum Engineers of AIME.

Ferris, J. G. and D. B. Knowles. 1954. "The Slug Test for Estimating Transmissivity." U.S. Geological Survey Groundwater Note 26.

Freeze, R. Allen, and John A. Cherry. 1979. Groundwater. Englewood Cliffs, New Jersey: Prentice-Hall, Inc.

Hvorslev. 1951. "Time Lag and Soil Permeability in Ground-Water Observations," 50. U.S. Army Corps of Engineers, Bulletin No. 36. Washington, D.C.

Johnson Division, UOP, Inc. 1966. Groundwater and Wells. Johnson Division, UOP, Inc. publication.

Lohman, S.W. 1972. "Ground-Water Hydraulics," 70. U.S. Geological Survey Paper 708. Washington, D.C.: U.S. Government Printing Office

Neuman, S.P. 1972. "Theory of Flow in Unconfined Aquifers Considering Delayed Response of the Water Table." Water Resources Research 8, no. 4: 1031.

Papadopulos, S. S., J. D. Bredehoeft, and H. H. Cooper, Jr. 1973. "On the Analysis of Slug Test Data." Water Resources Research 9, no. 4.

Todd, David K. 1980. Groundwater Hydrology, 2d ed. New York: John Wiley & Sons.

Walton, William C. 1970. Groundwater Resource Evaluation, New York: McGraw-Hill Book Company.

5. APPENDIXES

5.1. Equipment and Supplies Checklist

5.2. Slug Test Data Form

5.3. Data Form Completion

APPENDIX 5.1

EQUIPMENT AND SUPPLIES CHECKLIST

Water level measuring device:

_____ Water pressure transducers, if appropriate

_____ Electric water level indicator

_____ Weighted tapes with plopper

_____ Steel tape (subdivided into tenths of feet) and blue surveyor's chalk

_____ Electronic data logger (if transducer method is used)

_____ Stainless steel slug of a known volume

_____ Watch or stopwatch with second hand

_____ Tape measure (subdivided into hundredths of feet)

_____ Semilog graph paper (if required) and straight edge

_____ Appropriate references and calculator

_____ Duct tape

_____ Nonwater-soluble black ink pens

APPENDIX 5.2

SLUG TEST DATA FORM

SLUG TEST DATA

PAGE ____ OF ____

FACILITY CODE ______________________ **SLUG VOLUME (FT^3)** __________

LOCATION ID ______________________ **LOGGER CODE** __________

LOG DATE ______________________ ACCEPTANCE CODE __________

TEST METHOD: ☐ SLUG INJECTION OR ☐ SLUG WITHDRAWAL

COMMENTS ____

____

____

ELAPSED TIME (MIN)	**DEPTH-TO-WATER (FT)**	**ELAPSED TIME (MIN)**	**DEPTH-TO-WATER (FT)**
0.00			

ACCEPTANCE CODES: A-ACCEPTABLE R-RECONNAISSANCE U-UNACCEPTABLE N-NOT DETERMINED

COMPLETE BOLDED DATA FOR ENTRY INTO TIMS
STD-010 (1/88)

______________________ FORM COMPLETED BY/DATE

______________________ TECHNICAL REVIEWER/DATE

APPENDIX 5.3

DATA FORM COMPLETION

Use a pen with black ink that is not water soluble (not a felt-tip pen). Make an entry in each blank. Where there is no data entry, enter UNK for Unknown, NA for Not Applicable, or ND for Not Done. If any procedure was not performed as prescribed, give the reason for the change or omission on the form. To change an entry, draw a single line through it, add the correct information above it, and initial the change.

SLUG TEST DATA FORM

1. Facility code. Five-character code abbreviating the facility name where program activity is being conducted. The first three characters indicate the facility, and the remaining two numbers designate the specific site within the facility.

2. Location ID. Four-character code assigned sequentially to each borehole, test pit, or surface location where chemical, biological, radiological, and other measurements are taken.

3. Log Date. The date when the measurement was made in the format DD-MMM-YY (01-JAN-88).

4. Slug Volume (Ft^3). Manufacturer's specification for the known volume or displacement of the slug device.

5. Logger Code. Three-character code identifying the company responsible for performing field measurements or collecting samples.

6. Acceptance Code. One-character code assigned by the installation manager.

7. Test Method. The slug device is either injected (dropped) or withdrawn (pulled out) from the monitor well. Check the box that is applicable to the test situation being run.

8. Comments. Any additional information.

9. Elapsed Time (Min). Cumulative time readings from the beginning of the test to the end of the test in minutes.

10. Depth-to-Water (Ft). Depth of water recorded in hundredths of feet.

STANDARD OPERATING PROCEDURE 3.3

OPERATIONAL CHECK OF PRESSURE TRANSDUCERS USED IN MEASURING WATER LEVELS IN WELLS

1. PURPOSE

To describe procedures for conducting office and field checks of pressure transducers.

2. DISCUSSION

The Remedial Investigation Plan (RIP) for the site contains specific details about the frequency of measurements for this SOP. The documentation of water level measurements will be performed as described in the associated procedures. Pressure transducers measure hydrostatic pressure, which can then be converted to groundwater elevations. A transducer measures pressures over a specific range of submergence. Outside this range, measurements will not be accurate. If it is submerged more than two times its design range or subjected to negative pressures, the transducer can be damaged. This SOP describes a method to ensure that the transducer is working properly.

Take several precautions when using transducers of submergence. Vent the transducer cable so that the temperature and barometric pressure will not cause variations in the transducer reading. If the vent port is plugged, inaccurate readings will result. If water enters the vent and flows downward into the transducer, the transducer may be destroyed. The transducer cable is susceptible to physical damage (for example, abrasions on sharp well casings) and chemical degradation from solvents. If the cable is damaged and submerged, the transducer may be destroyed or inaccurate readings may result.

3. PROCEDURES

3.1. Associated Procedures

Before every operation, a review of the SOPs 1.1-1.10 is necessary. These SOPs contain information on the performance of field activities. They should be consulted for specific information about equipment and supplies; sample collection, preservation, packaging, and shipping; decontamination procedures; and documentation requirements. Procedures directly associated with this SOP are listed below.

SOP No.	SOP Title
1.1	General Instructions for Field Personnel
1.6	General Equipment Decontamination
3.1	Water Level Measurement
3.2	Aquifer (Slug) Testing
3.4	Aquifer Pumping Test

3.2. Preparation

3.2.1. Office

A. Review the RIP and SOPs listed in Section 3.1.

B. Coordinate schedules/actions with the installation staff.

C. Obtain appropriate permission for property access.

D. Assemble the equipment and supplies listed in Appendix 5.1. Ensure the proper operation of all sampling equipment.

E. Ensure the proper operation of the electronic data logger and pressure transducer. Review guidelines in the operator's manual for the electronic data logger. Be sure that the data logger or its battery pack is fully charged. Using a 3- to 4-ft column of water (for example, capped PVC casing), test the response of the electronic data logger and pressure transducer. Conduct a test for the proper depth response and a test for the drift of readings in this column.

Depth Response Test

1. Mark the length of the transducer cable at measured intervals appropriate for the column of water. Using a 4-ft column of water, for example, mark the cable with tape at 1-ft intervals (for a 3-ft length), beginning at the transducer end.

2. Lower the transducer and cable to the bottom of the water column.

3. Connect the cable to the electronic data logger and begin the logging sequence.

4. Wait one minute and raise the transducer a measured length. Wait one more minute.

5. Continue raising the transducer cable to the measured segments and logging the results for one minute until all segments have been measured.

6. Check the lengths recorded on the data logger against the measured lengths. If the difference is greater than 2% to 5% of the measured length, return the transducer to the manufacturer for calibration.

Drift Test

1. Lower the transducer into the water column and tape to the edge of the column.

2. Connect the transducer cable to the electronic data logger and begin a 15-min logging sequence.

3. Check the results for noticeable drift of the depth measurement.

4. Notify the manufacturer if an unacceptable drift is occurring.

3.2.2. Documentation

A. Obtain a logbook from the QA officer.

B. Record results of the equipment check in the logbook.

C. Obtain a sufficient number of the appropriate ER Program data collection forms for use during the field water level measurement task (see INDEX TO SOPs).

D. Consult the ER Program data administrator for a current list of information management codes and location IDs used in the completion of data forms.

3.2.3. Field

A. Locate the monitoring wells where the pressure transducers will be calibrated and locate the appropriate decontamination areas.

B. Assemble the testing equipment.

C. Decontaminate the transducer and cable as specified in the Sampling Plan and SOP 1.6, General Equipment Decontamination.

D. Make an initial water level measurement for the calibration monitoring well using a tape or water level sounder according to SOP 3.1, Water Level Measurement.

E. Before beginning the calibration, record the information and enter it into the electronic data logger. The type of information may vary, depending on the model used. When using different models, consult the operator's manual for the proper data entry sequence to be used. The following data are entered into the Enviro-Labs Model DL-120-MCP Data Logger as an example.

1. Baud rate
2. Station ID
3. Date (YY/MM/DD)
4. Time (HH:MM:SS)
5. Scale factors for each channel
6. Set logging sequence (use a logging sequence that will last for at least 3 min).

3.3. Operation

A. Cover sharp edges of the well casing with duct tape to protect the transducer cables.

B. Repeat the depth response test and drift test described in Section 3.2.1.E.

C. Continue the water level measurement task specified in the RIP (for example, slug test or pumping test).

3.4. Postoperation

3.4.1. Field

A. After completing the aquifer test, decontaminate the transducer and cable according to SOP 1.6, General Equipment Decontamination. Do not use solvents to decontaminate the transducer cable.

B. Complete the shutdown of the electronic data logger:

C. Ensure that all equipment is accounted for, decontaminated (see SOP 1.6, General Equipment Decontamination), and ready for shipment.

3.4.2. Documentation

A. Complete original calibration documentation (data logger printout).

B. Complete logbook entries, verify the accuracy of entries, and sign/initial all pages.

3.4.3. Office

A. Deliver documentation to the site manager for technical review. He/she will review and transmit to the document control officer (copies to the files) for eventual delivery to the Department of Energy.

B. Inventory equipment and supplies. Repair or replace all broken or damaged equipment. Replace expendable items. Return equipment to the equipment manager and report incidents of malfunction or damage.

D. Arrange for the repair of any transducers that were damaged or could not be calibrated.

4. SOURCES

Enviro-Labs, Inc. 1986. "Operation manual: El-200 Groundwater Monitoring System with Model EL-120-MCP Data Logger," April 1986. Milford, New Hampshire.

In-Situ, Inc. 1984. "Owner's Manual: Hydrologic Analysis System, Model SE200," April 1984. Laramie, Wyoming.

5. APPENDIX

5.1 Equipment and Supplies Checklist

APPENDIX 5.1

EQUIPMENT AND SUPPLIES CHECKLIST

_____ Electronic data logger

_____ Pressure transducer and cable

_____ Water level sounder

_____ Tape measure graduated in 0.01 ft

_____ Capped PVC casing

_____ Duct tape

_____ Clean water

STANDARD OPERATING PROCEDURE 3.4

AQUIFER PUMPING TEST

1. PURPOSE

To define procedures to conduct pumping tests for the *in situ* determination of the hydraulic properties of water-bearing soils and rocks.

2. DISCUSSION

An aquifer test is a controlled field experiment to determine the hydraulic properties of water-bearing soils and rocks. Groundwater flow varies in space and time and depends on the hydraulic properties of the saturated, odorous, or fractured medium and the boundary conditions imposed on the groundwater system. Pumping tests provide results that are more representative of aquifer characteristics than those predicted by slug tests, can be used to determine the hydraulics of interaquifer flow, require a greater degree of activity and expense than slug tests, and are not always justified for all levels of investigation. As an example, slug tests may be acceptable at the reconnaissance level, but pumping tests are usually performed as part of a feasibility study in support of designs for aquifer reclamation.

The rationale for the selection of a specific program of aquifer testing is contained in the Remedial Investigation Plan (RIP) for the site. Refer to the RIP for the duration of the pumping test, the location of the observation well, and the data to be collected. Collection of measurements and documentation of data will be performed as described in the associated procedures.

Aquifer characteristics that may be obtained from pumping tests include hydraulic conductivity (K), transmissivity (T), specific yield (Sy) for unconfined aquifers, and storage coefficient (S) for confined aquifers and the vertical hydraulic conductivity of confining layers. Also, the occurrence and position of recharge or impermeable boundaries can be identified. These parameters can be determined by graphical solutions and computerized programs.

3. PROCEDURES

Before every operation, a review of the SOPs 1.1-1.10 is necessary. These SOPs contain information on the performance of field activities. They should be consulted for specific information about equipment and supplies; sample collection, preservation, packaging, and shipping; decontamination procedures; and documentation requirements. Procedures directly associated with this SOP are listed below.

3.1. Associated Procedures

SOP No.	SOP Title
1.1	General Instructions for Field Personnel
1.6	General Equipment Decontamination

SOP No.	SOP Title
3.1	Water Level Measurement
3.3	Operational Check of Pressure Transducers Used in Measuring Water Levels in Wells

3.2. Preparation

3.2.1. Office

A. Review the RIP and SOPs listed in Section 3.1.

B. Coordinate schedules/actions with the installation staff.

C. Obtain appropriate permission for property access.

D. Assemble the equipment and supplies listed in Appendix 5.1. Ensure the proper operation of all sampling equipment.

E. Ensure that permission to discharge is obtained or a containment system is available for collecting water that will be pumped during the test. This is especially important for wells that may produce contaminated water.

3.2.2. Documentation

A. Obtain a logbook from the QA officer.

B. Record results of the equipment check in the logbook.

C. Obtain a sufficient number of the appropriate ER Program data collection forms (see INDEX TO SOPs).

D. Consult the ER Program data administrator for a current list of information management codes and location IDs used in the completion of data forms.

3.2.3. Field

A. Obtain the following information, equipment, and equipment modifications necessary to conduct a pumping test and check the equipment for proper functioning. Obtain assurances from the drilling contractor concerning the completion of the well installation and development and the availability of the necessary equipment to conduct the pumping test. The drilling contractor is responsible for completing the following tasks and supplying the equipment listed below before the arrival of field personnel.

1. Drilling, installing, completing, and developing all pump wells and one observation well to the proper specifications identified in the RIP.

2. Installing a submersible or turbine pump. The pumping well should be properly developed before testing.

3. Installing a totalizer meter and a flow meter in the discharge line of the pump well to accurately measure and monitor the volume and role of discharge.

4. Installing sufficient pipe to transport the discharge from the pumping well away from the area to prevent infiltration in the pumped zone.

5. Installing a gate valve on the discharge pipe to control the pumping rate.

6. Placing an outlet near the well head, but past the totalizer and flow meters, for water quality determination and sampling.

B. Calibrate all gauges, transducers, flow meters, and other equipment used in conducting pumping tests before use. Obtain copies of the documentation for instrumentation calibration and file them with the records of test data. Calibration records should contain laboratory measurements. If necessary, perform any onsite zero adjustment or calibration. Where possible, check all flow-measurement devices onsite using a container of measured volume and a stopwatch. Verify the accuracy of the meters before testing proceeds.

C. If funds are available, it is normally advisable to monitor pretest water levels at the test site for about one week before performing the test. This can be accomplished by using a continuous recording device like a Stevens Recorder. These records establish the barometric efficiency of the aquifer. The records also help determine if the aquifer is experiencing an increase or decrease in head with time caused by recharge or pumping in the nearby area or diurnal variations. Record changes in barometric pressure during the test (preferably with an onsite barograph) in order to correct water levels for any possible fluctuations that may occur from changing atmospheric conditions. Project the pretest water level trends for the duration of the test. These trends or barometric changes may be used to correct water levels during the test so that they are representative of the hydraulic response of the aquifer from pumping the test well.

D. The duration of the test is determined by the needs of the project and the aquifer properties. In general, longer tests produce more definitive results. If the budget permits, a duration of one to several days is desirable, followed by a similar period of monitoring the recovery of the water level. A knowledge of the local hydrogeology and a clear understanding of the overall objectives of the RIP are necessary in determining the direction of the test. The effect of any hydrogeologic boundaries should be considered. There is no need to continue the test if the water level becomes constant with time. This normally indicates that a hydrogeologic source has been intercepted and that additional useful information will not be collected by continued pumping. One simple test for determining the adequacy of data is when the log time compared to drawdown for the most distant observation well begins to plot as a straight line on the semilog graph paper. There are several exceptions to this simple rule of thumb, so it should be considered a minimum criterion.

E. Decontaminate the transducer(s) and cable(s) as specified in the Sampling Plan and SOP 1.6, General Equipment Decontamination.

3.3. Operation

A. The procedure to conduct pumping tests includes monitoring the water level over time in the pumping well and each observation well while the pumping well is discharged at a constant rate.

B. When the pumping test is performed using an electronic data logger and pressure transducer, store all data internally or on computer diskettes or tape. Directly transfer the information to the main computer and analyze it. Maintain a computer printout of the data in the files for documentation. Take manually determined measurements periodically to verify data recorded by the data logger.

C. If an electronic data logger and pressure transducer are not used, record all data on the Pump/Recovery Test Data form (Appendix 5.2). Data collected manually during a logger-transducer pumping test will also be recorded on the form. Fill out the form as described in Appendix 5.3.

D. During a pumping test, measure water levels as often as necessary to produce a meaningful indication of hydraulic properties of the aquifer. Measure water levels as specified in SOP 3.1, Water Level Measurement.

During the early part of the test, station at least one person at each observation well and at the pumping well. After the first two hours, two people are usually needed to continue the test. It is not necessary for readings at the wells to be taken simultaneously. It is very important that depth-to-water readings are measured accurately and recorded at the exact time they are measured.

NOTE: Pressure transducers and electronic data loggers may be used to reduce the field personnel hours required for the pumping test.

E. After pumping is concluded, measure recovering water levels to verify the results obtained from the pumping portion of the test. Measure the recovering water levels in the pumping well and the observation wells for a period immediately following the cessation of pumping. Monitoring during recovery should occur for at least half the length of the pumping portion of the aquifer test. The decision to cease monitoring water levels will be based on aquifer recovery.

3.4. Postoperation

3.4.1. Field

A. If using an electronic data logger, follow the steps listed below.

1. Stop the logging sequence.

2. Print the data or send it to the computer by telephone.

3. Save memory and disconnect the battery at the end of the day's activities.

B. Put the testing equipment in storage containers.

C. Ensure that all equipment is accounted for, decontaminated (see SOP 1.6, General Equipment Decontamination), and ready for shipment.

D. Restore the site to pretesting conditions as specified in the RIP.

E. Make sure all wells are properly labeled and the location ID is readily visible on the guard pipe.

3.4.2. Documentation

A. Record cleanup and hole abandonment procedures and any uncompleted work (like site restoration or long-term monitoring) in the logbook.

B. Complete logbook entries, verify the accuracy of entries, and sign/initial all pages.

C. Review data collection forms for completeness.

3.4.3. Office

A. Deliver original forms and logbooks to the site manager for technical review. He/she will review, sign forms, and transmit to the document control officer (copies to the files) for eventual delivery to the Department of Energy.

B. Inventory equipment and supplies. Repair or replace all broken or damaged equipment. Replace expendable items. Return equipment to the equipment manager and report incidents of malfunction or damage.

C. Interpret the pumping test results with the project hydrogeologist or site manager. Analyze data using appropriate analytical solution(s).

D. If necessary, send data logger or pressure transducers to the factory for recalibration.

4. SOURCES

Boulton, N. S. 1954. "The Drawdown of the Water-Table under Non-Steady Conditions Near a Pumped Well in an Unconfined Formation." Proceedings of the Institution of Civil Engineers 3, paper 5979: 564.

Boulton, N. S. 1954. "Analysis of Data from Non-Equilibrium Pumping Tests Allowing for Delayed Yield from Storage." Proceedings of the Institution of Civil Engineers 26, paper 6693: 469-82.

Bouwer, H. 1978. Groundwater Hydrology. New York: McGraw-Hill Book Company.

Bredehoeft, J. D. and S. S. Papadopulos. 1980. "A Method for Determining the Hydraulic Properties of Tight Formations." Water Resources Research 16, no. 1: 233-38.

Cooper, Jr., H. H., J. D. Bredehoeft, and S. S. Papadopulos. 1967. "Response of a Finite-Diameter Well to an Instantaneous Charge of Water." Water Resources Research 13, no. 1.

Cooper, Jr., H. H. and C. E. Jacob. 1946. "A Generalized Graphical Method for Evaluating Formation Constants and Summarizing Well-Field History." American Geophysical Union Transactions 27, no. 4: 526-34.

Earlougher, R. C. 1977. Advances in Well Test Analysis. Society of Petroleum Engineers of AIME publication, Houston, Texas.

Freeze, R. Allen, and John A. Cherry. 1979. Groundwater. Englewood Cliffs, New Jersey: Prentice-Hall, Inc.

5. APPENDIXES

5.1. Equipment and Supplies Checklist

5.2. Pump/Recovery Test Data Form

5.3. Data Form Completion

APPENDIX 5.1

EQUIPMENT AND SUPPLIES CHECKLIST

Water level measuring device:

_____ Water pressure transducer

_____ Electric water level indicator

_____ Weighted tapes with plopper

_____ Steel tape (subdivided into tenths of feet)

_____ Electronic data logger (if transducer method is used)

_____ Tape measure (subdivided into hundredths of feet)

_____ Watch or stopwatch with second hand

_____ Semilog graph paper (if required)

_____ Waterproof ink pen

_____ Thermometer

_____ Appropriate references and calculator

_____ Barometer or recording barograph (for tests conducted in confined aquifers)

APPENDIX 5.2

PUMP/RECOVERY TEST DATA FORM

PUMP/RECOVERY TEST DATA PAGE 1 OF ____

FACILITY CODE _____ **DISTANCE FROM PUMPED WELL (FT)** _____

LOCATION ID _____ **LOGGER CODE** _____

LOG DATE _____ **ACCEPTANCE CODE** _____

TEST START:
DATE _____
TIME _____
STATIC WATER LEVEL (FT) _____

TEST END:
DATE _____
TIME _____
STATIC WATER LEVEL (FT) _____

AVERAGE PUMPING RATE (GAL/MIN) _____

MEASUREMENT METHODS _____

COMMENTS _____

PUMP TEST			RECOVERY TEST	
ELAPSED TIME (MIN)	**DEPTH-TO-WATER (FT)**	PUMPING RATE (GAL/MIN)	**ELAPSED TIME (MIN)**	**DEPTH-TO-WATER (FT)**
0.00			0.00	

ACCEPTANCE CODES: A-ACCEPTABLE R-RECONNAISSANCE U-UNACCEPTABLE N-NOT DETERMINED

COMPLETE BOLDED DATA FOR ENTRY INTO TIMS

FTD-011 (1/88) FORM COMPLETED BY/DATE _____ TECHNICAL REVIEWER/DATE _____

APPENDIX 5.3

DATA FORM COMPLETION INSTRUCTIONS

Use a pen with black ink that is not water soluble (not a felt-tip pen). Make an entry in each blank. Where there is no data entry, enter UNK for Unknown, NA for Not Applicable, or ND for Not Done. If any procedure was not performed as prescribed, give the reason for the change or omission on the form. To change an entry, draw a single line through it, add the correct information above it, and initial the change.

PUMP/RECOVERY TEST DATA FORM

1. Facility Code. Five-character code abbreviating the facility name where program activity is being conducted. The first three characters indicate the facility, and the remaining two numbers designate the specific site within the facility.

2. Location ID. Four-character code assigned sequentially to each borehole, test pit, or surface location where chemical, biological, radiological, and other measurements are taken.

3. Log Date. The date when the measurement was made in the format DD-MMM-YY (01-JAN-88).

4. Distance From Pumped Well (Ft). Distance the observation well is from the pumping well in feet and tenths of feet.

5. Logger Code. Three-character code identifying the company responsible for performing field measurements or collecting samples.

6. Acceptance Code. One-character code assigned by the installation manager, but entered on the form by field personnel.

7. Test Start Date. The date when pumping was initiated in the format DD-MMM-YY (01-JAN-88).

8. Test Start Time. The time when pumping was initiated using the 24-hr clock with the format of hours:minutes (08:37 for 8:37 a.m. and 19:12 for 7:12 p.m.).

9. Static Water Level (Ft). Depth-to-water in feet and hundredths of feet in the observation well at the beginning of the pumping test.

10. Test End Date. The date when pumping ceased.

11. Test End Time. The time when pumping ceased.

12. Water Level (Ft). Depth-to-water in feet and hundredths of feet in the observation well at the end of the pumping test.

13. Average Pumping Rate (Gal/Min). Total volume pumped (from totalizer meter) divided by the total elapsed time.

14. Measurement Methods. Type of instrument used to measure depth-to-water (may include steel tape, electric sounding probes, Stevens recorders, or pressure transducers).

15. Comments. Any additional information.

PUMP TEST:

a. Elapsed Time (Min.). Time of measurement recorded continuously from time 0.00 (start of test) in minutes.

b. Depth-to-Water (Ft). Depth-to-water in feet and hundredths of feet in the pump or observation well at the time of the water level measurement.

c. Pumping Rate (Gal/Min). Flow rate in gallons per minute of pumping measured from the in-line flow meter. This column should be completed only for the form used with the pumped well.

RECOVERY TEST:

a. Elapsed Time (Min). See above PUMP TEST a.

b. Depth-to-Water (Ft). See above PUMP TEST b.

STANDARD OPERATING PROCEDURE 4.1

SOIL BORING

1. PURPOSE

To ensure acceptable, consistent soil-boring procedures for all pertinent aspects of hazardous waste investigations.

2. DISCUSSION

The Remedial Investigation Plan (RIP) provides information about the scope and details of the soil-boring operation, including specifications for drilling techniques. Refer to the RIP for the type, number, and depth intervals at which samples will be collected. Collection and measurement of samples and the documentation of data will be performed as specified in the associated procedures.

To the extent possible, the boring process should not alter the medium that is being investigated. Various methods can be used for soil boring. These include, but are not limited to, hollow-stem augering, cable tool, mud rotary, and air rotary. For most investigations, dry hollow-stem augering or cable tool are the preferred drilling methods. Additional information concerning boring techniques is contained in the SOP 4.2, Rock Boring.

3. PROCEDURES

3.1. Associated Procedures

Before every operation, a review of the SOPs 1.1-1.10 is necessary. These SOPs contain information on the performance of field activities. They should be consulted for specific information about equipment and supplies; sample collection, preservation, packaging, and shipping; and documentation requirements. Procedures directly associated with this SOP are listed below.

SOP No.	SOP Title
1.1	General Instructions for Field Personnel
1.3	Sample Control and Documentation
1.4	Sample Containers and Preservation
1.5	Guide to Handling, Packaging, and Shipping of Samples
1.6	General Equipment Decontamination
4.2	Rock Boring
4.3	Monitoring Well Installation

SOP No.	SOP Title
5.1	Soil and Rock Borehole Logging and Sampling
6.1	Health and Safety Monitoring of Combustible Gas Levels
6.2	Health and Safety Monitoring of Organic Vapors with a Photoionization Detector
6.3	Health and Safety Monitoring of Organic Vapors with a Flame Ionization Detector

3.2. Preparation

3.2.1. Office

A. Review the RIP and SOPs listed in Section 3.1.

B. Coordinate schedules/actions with the installation staff.

C. Obtain appropriate permission for property access.

D. Assemble the equipment and supplies listed in Appendix 5.1. Ensure the proper operation of all sampling equipment.

E. If samples are to be collected for analyses, notify the laboratory of sample types, the number of samples, and the approximate arrival date. In addition, contact the carrier that will transport samples to obtain information on regulations and specifications.

F. Ensure that boring or well-drilling permits required by state or local authorities have been obtained, as well as procedures for compliance with state or local regulations regarding the submission of well logs and samples.

G. Research the site hydrogeology to estimate the key parameters (for example, anticipate the aquifer depth and thickness and types of contaminants).

3.2.2. Documentation

A. Obtain a logbook from the QA officer.

B. Record results of the equipment check in the logbook.

C. Obtain a sufficient number of the appropriate ER Program data collection forms (see INDEX TO SOPs).

D. Consult the ER Program data administrator for a current list of information management codes, location IDs, and sample numbers used in the completion of data forms.

3.2.3. **Field**

A. Before drilling, decontaminate all downhole drilling and sampling equipment, as well as the back of the drilling rig (as described in SOP 1.6, General Equipment Decontamination).

B. Clear the work site of all brush and minor obstructions.

C. Stake the location of utilities and the proposed boring areas.

NOTE: Ensure that proposed boring areas are not traversed by utility transmission ways.

D. If drilling fluid or grout is required, the source(s) of any water to be used in grouting and well installation must be approved by the site manager before field operations.

3.3. **Operation**

A. Decontaminate sampling equipment between sampling events (as described in SOP 1.6, General Equipment Decontamination).

B. Inventory all samples as specified in SOP 1.3, Sample Control and Documentation.

C. Handle all samples as specified in SOP 1.5, Guide to Handling, Packaging, and Shipping of Samples.

D. Soil sampling and borehole logging must conform to SOP 5.1, Soil and Rock Borehole Logging and Sampling.

E. If field screening of samples for organic vapors is required, conduct the survey as described in SOP 6.2, Health and Safety Monitoring of Organic Vapors with a Photoionization Detector, and SOP 6.3, Health and Safety Monitoring of Organic Vapors with a Flame Ionization Detector.

F. If the boring is to be completed as a monitoring well, review SOP 4.3, Monitoring Well Installation, for pertinent information.

G. Ensure that the back of the drilling rig is free of any leaking hydraulic lines. Do not grease surfaces to the point that excess grease could be dislodged during drilling.

H. Conduct work in compliance with all Occupational Safety and Health Administration (OSHA) regulations regarding drilling safety and the detection of underground utilities. If required by safety considerations, staked boring should be moved.

I. For each operating drill rig, designate an individual to be responsible for logging the samples, preparing the boring logs and well sketches, and the well installation of that rig. More than one rig at a time may be supervised by a qualified individual.

J. Log the samples, prepare the boring logs and well sketches, and supervise the well installation.

NOTE: Whenever a sample is collected, a custody record must be initiated on the Custody Transfer Record/Lab Work Request form and a Soil Sample Identification Label affixed to the sample container. SOP 1.3, Sample Control and Documentation, contains copies of the form and label and instructions for completing the form and label.

K. Do not use dyes, tracers, or other substances or introduce them into borings, wells, lysimeters, grout, backfill, groundwater, or surface water unless specifically required by the contract.

L. If drilling fluids are required, maintain portable recirculation tanks for accurate records of fluid loss.

M. If specified, air systems include an air line oil filter that requires frequent replacement to remove all oil residue from the air compressor. Describe the air system manufacturer's name, model number, air pressures used, the frequency of changing the oil filter, and the evaluation of air line filtering in the logbook.

N. Follow the sampling interval and type of sampling equipment specified in the RIP unless directed by the site manager.

O. Record all field measurements and comments on the Borehole Log (Soil) form (see SOP 5.1). Complete all lines on the forms. Use the letter designation NA for not applicable, ND for not done, or UNK for unknown when applicable. If some steps or procedures are not performed as described, state the reason (as is practicable) on the Borehole Log (Soil) form or submit it as an attachment.

P. Maintain a daily detailed driller's report during drilling. Resolve all disputes concerning drilling time, standby time, and work progress at the end of each day. The driller's representative should sign and initial the daily report to indicate concurrence. The report should provide a complete description of all formations encountered, the number of feet drilled, the number of hours on the job, any shutdowns because of breakdown, the feet of casing set, and other pertinent data.

Q. Collect, containerize, and store all excess soil cuttings, waste materials, and decontamination solutions for proper disposal as specified in the RIP.

R. If temporary casing is specified in the RIP, advance the casing to the specified depth. Remove all loose material within the casing before sampling. Advance the casing according to project requirements. Use the type of casing-advance technique that is specified in the RIP. The casing will be of the flush-joint or flush-couple type and of sufficient size to allow for soil sampling, coring, or well installation. All casing sections should be straight and free of any obstructions. If hollow-stem augers are used, equip the bit with a plug device that can be removed at the required sampling depth.

S. The abandonment of any boring should follow any appropriate state regulations and be approved before any casing removal or sealing/backfilling. Seal borings by grouting from the bottom of the boring or well to the ground surface. This

can be accomplished by placing a tremie pipe at the bottom of the boring and pumping grout through this pipe until undiluted grout flows from the boring at ground surface. The grout or tremie pipe may be gradually withdrawn, as long as the end of the pipe is at least 10 ft below the grout surface. The grout should consist of a neat cement with 4 lbs of commercial bentonite and approximately 7.5 gallons of water added for every 94-lb bag of cement. After the grout has set (about 72 hrs), the contractor should check the abandoned site for grout settlement. Fill any depression in the grout with the grout mix described above. Methods other than those described here may be implemented as dictated by appropriate state or local agencies. Do not use any grout additives except the 4% bentonite.

T. Safety equipment should be specified by the site health and safety officer. In all cases, the minimum physical protection worn by drilling personnel should include a hard hat, safety glasses, gloves, steel-toed leather boots, and hearing protection.

3.4. Postoperation

3.4.1. Field

A. Ensure that all equipment is accounted for, decontaminated (see SOP 1.6, General Equipment Decontamination), and ready for shipment.

B. Restore the site to presampling conditions and fill open sampling holes as specified in the RIP.

C. Make sure all borehole locations are properly staked and the location ID is readily visible on the location stake.

D. Have the driller approve and initial the report of progress at the end of each operating day.

3.4.2. Documentation

A. Record cleanup and hole abandonment procedures and any uncompleted work (like site restoration or long-term monitoring) in the logbook.

B. Complete logbook entries, verify the accuracy of entries, and sign/initial all pages.

C. Review data collection forms for completeness.

D. If required by local or state law, file well-installation reports.

E. After a land survey, verify that the drilling permit describes the site location accurately. If necessary, modify and resubmit the permit.

3.4.3. Office

A. Deliver original forms and logbooks to the site manager for technical review. He/she will review, sign forms, and transmit to the document control officer (copies to the files) for eventual delivery to the Department of Energy.

B. Inventory equipment and supplies.' Repair or replace all broken or damaged equipment. Replace expendable items. Return equipment to the equipment manager and report incidents of malfunction or damage.

C. If samples have been collected for analysis, contact the laboratory to ensure that samples arrived safely and instructions for sample analyses are clearly understood.

D. If drilling wastes were stored, determine the appropriate disposal (based on laboratory analysis) of the soils from the borings.

4. SOURCES

Barcelona, M. J., J. P. Gibb, J. A. Helfrich, and E. E. Garske. 1985. "Practical Guide to Groundwater Sampling." U.S. Environmental Protection Agency report EPA/600/2-85/104. Washington, D.C.: U.S. Government Printing Office.

DOE. 1985. "Field Technical Representaive Manual.". 2d ed. U.S. Department of Energy, Uranium Mill Tailings Remedial Action Project Office, Albuquerque Operations Office document, June 1985. Albuquerque, New Mexico.

5. APPENDIX

5.1. Equipment and Supplies Checklist

APPENDIX 5.1

EQUIPMENT AND SUPPLIES CHECKLIST

_____ Sample containers

_____ Appropriate clothing

_____ Sprayer with clean water for dust control

_____ Any applicable licenses and permits

_____ Camera and film

_____ Measuring tape

_____ Plastic sheets

_____ Any additional supplies listed in associated procedures, as needed

STANDARD OPERATING PROCEDURE 4.2

ROCK BORING

1. PURPOSE

To ensure acceptable, consistent rock boring procedures for all pertinent aspects of hazardous waste investigations.

2. DISCUSSION

The Remedial Investigation Plan (RIP) provides information about the scope and details of the rock-boring operation, including specifications on drilling techniques to be used at a site. Refer to the RIP for the type, number, and depth intervals at which samples will be collected. Collection and measurement of samples and the documentation of data will be performed as specified in the associated procedures.

Rock boring provides samples for logging, geotechnical analysis, and monitoring well installation. The boring process should not (to the extent practicable) alter the medium that is being investigated. Rock-boring techniques include, but are not limited to, cable tool, rotary, reverse-circulation rotary, and coring.

3. PROCEDURES

3.1. Associated Procedures

Before every operation, a review of the SOPs 1.1-1.10 is necessary. These SOPs contain information on the performance of field activities. They should be consulted for specific information about equipment and supplies; sample collection, preservation, packaging, and shipping; decontamination procedures; and documentation requirements. Procedures directly associated with this SOP are listed below.

SOP No.	SOP Title
1.1	General Instructions for Field Personnel
1.3	Sample Control and Documentation
1.4	Sample Containers and Preservation
1.5	Guide to Handling, Packaging, and Shipping of Samples
1.6	General Equipment Decontamination
4.3	Monitoring Well Installation
5.1	Soil and Rock Borehole Logging and Sampling

SOP No.	SOP Title
6.1	Health and Safety Monitoring of Combustible Gas Levels
6.2	Health and Safety Monitoring of Organic Vapors with a Photoionization Detector
6.3	Health and Safety Monitoring of Organic Vapors with a Flame Ionization Detector

3.2. Preparation

3.2.1. Office

A. Review the RIP and SOPs listed in Section 3.1.

B. Coordinate schedules/actions with the installation staff.

C. Obtain appropriate permission for property access.

D. Assemble the equipment and supplies listed in Appendix 5.1. Ensure the proper operation of all sampling equipment.

E. If samples are to be collected for analyses, notify the laboratory of sample types, the number of samples, and the approximate arrival date. In addition, contact the carrier that will transport samples to obtain information on regulations and specifications.

F. Obtain all boring or well-drilling permits required by state or local authorities and informtion required for compliance with state or local regulations regarding the submission of well logs and samples. Obtain utility maps for the site and coordinate boring locations with utility companies.

G. Research the site hydrogeology to estimate the key parameters (for example, anticipated aquifer depth and thickness, types of contaminants, and grain-size distribution).

3.2.2. Documentation

A. Obtain a logbook from the QA officer.

B. Record results of the equipment check in the logbook.

C. Obtain a sufficient number of the appropriate ER Program data collection forms (see INDEX TO SOPs).

D. Consult the ER Program data administrator for a current list of information management codes, location IDs, and sample numbers used in the completion of data forms.

3.2.3. Field

A. Before drilling, decontaminate all downhole drilling and sampling equipment, as well as the back of the drilling rig (as described in SOP 1.6, General Equipment Decontamination).

B. Clear the working areas of brush and minor obstructions.

C. Stake the location of utilities and locations for proposed borings.

NOTE: Ensure that proposed boring areas are not traversed by utility transmission ways.

D. If drilling fluid or grout is required, the source(s) of any water to be used in grouting and well installation must be approved by the site manager before field operations.

3.3. Operation

A. Decontaminate sampling equipment between sampling events as described in the SOP 1.6, General Equipment Decontamination.

B. Handle all samples as described in the SOP 1.5, Guide to Handling, Packaging, and Shipping of Samples.

C. Rock sampling and borehole logging must conform to the specifications defined in the SOP 5.1, Soil and Rock Borehole Logging and Sampling.

D. If field screening of samples for organic vapors is required, conduct it as described in the SOP 6.2, Health and Safety Monitoring of Organic Vapors with a Photoionization Detector, and SOP 6.3, Health and Safety Monitoring of Organic Vapors with a Flame Ionization Detector.

E. If the boring is to be completed as a monitoring well, review the SOP 4.3, Monitoring Well Installation, for pertinent information.

F. The back of the drilling rig must be free of any leaking hydraulic lines. Do not grease surfaces to the point that excess grease could be dislodged during drilling.

G. Conduct work in compliance with Occupational Safety and Health Administration (OSHA) regulations regarding drilling safety and the detection of underground utilities. If required by safety considerations, relocate the borings.

H. For each operating drill rig, designate an individual to be responsible for logging samples, preparing boring logs and well sketches, and the well installation of that rig. More than one rig at a time may be supervised by a qualified individual.

I. Do not use dyes, tracers, or other substances or introduce them into borings, wells, soil moisture (water) samplers, grout, backfill, groundwater, or surface water unless specifically required by the contract.

J. If drilling fluids are required, do not use dug (lined) sumps; portable recirculation tanks are required.

K. Log the samples, prepare the boring logs and well sketches, and supervise the well installation.

NOTE: Whenever a sample is collected, a custody record must be initiated on the Custody Transfer Record/Lab Work Request form and a Soil Sample Identification Label affixed to the sample container. SOP 1.3, Sample Control and Documentation, contains copies of the form and label and instructions for completing the form and label.

L. If specified, air systems should include an air line oil filter that requires frequent replacement to remove all oil residue from the air compressor. The use of any air system should be fully described in the driller's log and include an equipment description, the manufacturer's name, model name, air pressures used, the frequency of changing the oil filter, and an evaluation of the air line filtering.

M. Follow the sampling interval and type of sampling equipment specified in the RIP unless directed by the site manager.

N. Record all field measurements and comments on the Borehole Log (Rock) form (see SOP 5.1). Complete all lines on the forms. Use the letter designation NA for not applicable, ND for not done, or UNK for unknown when applicable. If some steps or procedures were not performed as described, state the reason (as practicable) on the Borehole Log (Rock) or submit it as an attachment.

O. During drilling, maintain a daily detailed driller's report and have a qualified person submit it if requested by the site manager. The report will provide a complete description of all formations encountered, the number of feet drilled, the number of hours on the job, any shutdowns because of breakdown, the feet of casing set, and other pertinent data.

P. If rock coring is specified, follow the procedure described below.

1. Casing is required for the full depth of the overburden in borings when rock is cored.

2. Advance the casing according to specifications in the RIP. The casing should be of the flush-joint or flush-couple type and of sufficient size to allow for soil sampling, coring, and well installation. All casing sections should be straight and free of any obstructions. If hollow-stem augers are to be used, equip the bit with a plug device that can be removed at the required sampling depth.

3. Use drill rods for drilling rock that are NW in size to minimize vibration and chattering. Rock core size should be NX, NQ (wire line), or a size specified in the RIP.

4. Use core barrels of the improved double-tube varieties (like the Christensen Series C or D models or the equivalent) that are equipped with a split inner tube.

5. Use five-ft barrels at the discretion of the site manager.

6. Make every effort to use clear water as a drilling fluid. In the event that this is impractical, recirculated water may be used at the discretion of the site manager, as long as a settling tank and filtering system are provided.

7. To minimize core losses in soft, erodable rock, the measures listed below should be required by the supervising field technician.

   a. Restrict drilling to short runs of 2 to 3 ft.

   b. Keep drilling water pressure low (under 150 psi).

   c. Keep feed pressure under 100 psi.

8. The supervising geologist should not permit a full coring run to be drilled if he/she suspects that core was left in the hole on the previous run. If this is believed to have occurred, shorten the next coring run by the length of core believed to have been left in the hole. This is necessary to prevent blocking the core barrel and grinding the core.

9. Upon removal of the core barrel from the drill hole, the driller should remove and open the split inner tube and deliver it to the field technician. If necessary to facilitate accurate logging, wipe off the core while it rests in the inner half.

10. Store rock cores in cardboard or wood core boxes so that their relative position by depth is preserved. Note intervals of lost core in the core sequence. Clearly mark the top of the core sequence. Mark boxes with the boring number, cored interval, and box number in cases of multiple boxes. The weight of each fully loaded box should not exceed 75 lbs. No data should appear on or within the box that is not specified on the Boring Log (Rock).

11. Each box should contain core from only one borehole. If spacers are required to separate intervals of core runs, use wooden blocks that have been clearly marked with the missing interval of core.

Q. If tri-cone rotary drilling is used, record the items below.

1. Rate of drilling

2. Percent of drilling fluid recovery

3. Changes in drilling fluid and water color

4. Lithologic description

   Determine lithologies by using a kitchen screen to separate rock particles from the return waters. Describe the cuttings according to SOP 5.1, Soil and Rock Borehole Logging and Sampling. Place the cuttings on plastic sheets for easier tracking of depth and examination.

R. In the abandonment of any boring, follow any appropriate state regulations and obtain approval before any casing removal or sealing/backfilling. Seal borings by grouting from the bottom of the boring or well to the ground surface. This will be accomplished by placing a tremie pipe at the bottom of the boring and pumping grout through this pipe until undiluted grout flows from the boring at the ground surface. The grout or tremie pipe may be gradually withdrawn, as long as the end of the pipe is at least 10 ft below the grout surface. The grout should consist of a neat cement with 4 lbs of commercial bentonite and approximately 7.5 gallons of water added for every 94-lb bag of cement. After the grout has set (about 72 hrs), the contractor should check the abandoned site for grout settlement. Fill any depression in the grout with the grout mix described above. Methods other than those described here may be implemented as dictated by appropriate state or local agencies. Do not use any grout additives except the 4% bentonite.

S. Safety equipment should be specified by the site and safety officer. In all cases, the minimum physical protection worn by drilling personnel should include a hard hat, safety glasses, gloves, steel-toed boots, and hearing protection.

3.4 . Postoperation

3.4.1. Field

A. Ensure that all equipment is accounted for, decontaminated (see SOP 1.6, General Equipment Decontamination), and ready for shipment.

B. Restore the site to presampling conditions as specified in the RIP.

C. Make sure all borehole locations are properly staked and the location ID is readily visible on the location stake or protective casing.

D. Have the driller approve and initial the report of progress at the end of each operating day.

E. Prepare samples and transport according to SOP 1.3, Sample Control and Documentation; SOP 1.4, Sample Containers and Preservation; and SOP 1.5, Guide to Handling, Packaging, and Shipping of Samples.

3.4.2. Documentation

A. Record cleanup and hole abandonment procedures and any uncompleted work (like site restoration or long-term monitoring) in the logbook.

B. Complete logbook entries, verify the accuracy of entries, and sign/initial all pages.

C. Review data collection forms for completeness.

D. If required by local or state law, file well-installation reports.

E. After a land survey, verify that the drilling permit describes the site location accurately. If necessary, modify and resubmit the permit.

3.4.3. Office

A. Deliver original forms and logbooks to the site manager for technical review. He/she will review, sign forms, and transmit to the document control officer (copies to the files) for eventual delivery to the Department of Energy.

B. Inventory equipment and supplies. Repair or replace all broken or damaged equipment. Replace expendable items. Return equipment to the equipment manager and report incidents of malfunction or damage.

C. If samples have been collected for analysis, contact the laboratory to ensure that samples arrived safely and instructions for sample analyses are clearly understood.

D. If drilling wastes were stored, determine the appropriate disposal (based on laboratory analysis) of the soils from the borings.

4. SOURCES

Barcelona, M. J., J. P. Gibb, J. A. Helfrich, and E. E. Garske. 1985. "Practical Guide to Groundwater Sampling." U.S. Environmental Protection Agency report EPA/600/2-85/104. Washington, D.C.: U.S. Government Printing Office.

DOE. 1985. "Field Technical Representaive Manual." 2d ed. U.S. Department of Energy, Uranium Mill Tailings Remedial Action Project Office, Albuquerque Operations Office document, June 1985. Albuquerque, New Mexico.

5. APPENDIX

5.1. Equipment and Supplies Checklist

APPENDIX 5.1.

EQUIPMENT AND SUPPLIES CHECKLIST

_____ Sprayer with clean (potable) water for dust control

_____ Core boxes

_____ Wood block or lath

_____ Measuring tape (tenths)

_____ Large, black permanent marker

_____ Strapping tape

_____ Appropriate clothing

_____ Sprayer with clean water for dust control

_____ Any applicable licenses and permits

_____ Camera and film

_____ Sample containers

_____ Plastic sheets

_____ Any additional supplies listed in associated procedures, as needed

STANDARD OPERATING PROCEDURE 4.3

MONITORING WELL INSTALLATION

1. PURPOSE

To ensure acceptable, consistent monitoring well installation.

2. DISCUSSION

Monitoring well installation creates a permanent access for collecting groundwater samples and measuring aquifer characteristics. Ideally, the well should not alter the medium that is being sampled.

The Remedial Investigation Plan (RIP) provides information about the scope and details of monitoring well installation at a given site. A list of critical issues involved in monitoring well installation are listed below.

- Soil/rock boring technique
- Casing and screen materials
- Casing and screen diameter, screen length, and screen interval
- Filter pack and screen size

The RIP contains specific details about the procedures and equipment for this SOP. Refer to the RIP for the location and specifications of the wells to be installed. Borehole drilling, development of the wells, collection and measurement of samples, and the documentation of data will be performed as described in the associated procedures.

3. PROCEDURES

3.1. Associated Procedures

Before every operation, a review of the SOPs 1.1-1.10 is necessary. These SOPs contain information on the performance of field activities. They should be consulted for specific information about equipment and supplies; sample collection, preservation, packaging, and shipping; decontamination procedures; and documentation requirements. Procedures directly associated with this SOP are listed below.

SOP No.	SOP Title
1.1	General Instructions for Field Personnel
1.6	General Equipment Decontamination
2.2	Field Measurements on Ground and Surface Water Samples
3.1	Water Level Measurement

SOP No.	SOP Title
4.1	Soil Boring
4.2	Rock Boring
4.4	Monitoring Well Development
5.1	Soil and Rock Borehole Logging and Sampling
6.1	Health and Safety Monitoring of Combustible Gas Levels
6.2	Health and Safety Monitoring of Organic Vapors with a Photoionization Detector
6.3	Health and Safety Monitoring of Organic Vapors with a Flame Ionization Detector

3.2. Preparation

3.2.1. Office

A. Review the RIP and SOPs listed in Section 3.1.

B. Coordinate schedules/actions with the installation staff.

C. Obtain appropriate permission for property access.

D. Research site hydrogeology to estimate key parameters (for example, anticipated aquifer depth and thickness, types of contaminants, and grain-size distribution).

E. If water/sand slurry or grout is required, the source(s) of any water used must be approved by the site manager before field operations.

3.2.2. Documentation

A. Obtain a logbook from the QA officer.

B. Record results of the equipment check in the logbook.

C. Obtain a sufficient number of the appropriate ER Program data collection forms (see INDEX TO SOPs).

D. Consult the ER Program data administrator for a current list of information management codes, location IDs, and sample numbers used in the completion of data forms.

E. Record all pertinent information (date, site, ID #, and location) in the logbook or on the appropriate form. Include field conditions, unusual circumstances, and weather. Instructions for logbook entries are in SOP 1.3, Sample Control and Documentation.

3.2.3. Field

A. Decontaminate all equipment before monitoring well installation, as specified in SOP 1.6, General Equipment Decontamination.

3.3. Operation

A. Any use of solvents, glues, soap, or cleaners is prohibited below grade unless otherwise stated in the specifications. When they are it is used, describe the material and include the manufacturer and type (specification). The use of pipe dope, grease, and oil is also prohibited.

B. Monitor downhole and the breathing zone according to SOP 6.1, Health and Safety Monitoring of Combustible Gas Levels; SOP 6.2, Health and Safety Monitoring of Organic Vapors with a Photoionization Detector; and SOP 6.3, Health and Safety Monitoring of Organic Vapors with a Flame Ionization Detector. Perform readings as often as necessary to ensure the safety of workers. Record all measurements on the data collection forms included with these SOPs.

C. Record all field measurements and comments on the Well Completion Information or the Borehole/Well Construction Field Data Log form. Complete all lines on the forms. Use the letter designation NA for not applicable, ND for not done, or UNK for unknown when applicable. If some steps or procedures were not performed as described, state the reason (as practicable) on the form or submit it as an attachment. Copies of these forms are in Appendix 5.1 and Appendix 5.2, respectively. Fill out the forms as described in Appendix 5.6. For a current list of codes used in the data form completion, consult the ER Program data administrator.

D. Record the diagram of the well installation on the Well Completion Information form and show the depth from surface grade, the bottom of the boring, sump, screen location, coupling design and location, granular backfill, seals, grout, cave-in, centralizers, and the height of the riser above the ground surface. Record the actual composition of the grout, seals, and granular backfill on each Borehole/Well Construction Field Data Log form. Include the screen slot size (in inches), slot configuration, and screen manufacturer.

E. If appropriate, include the protective casing detail on all well sketches.

F. If a sand pack is specified, follow the instructions listed below.

1. Base the average grain size of the sand on the expected grain-size distributions in the screened formation and the size of predesigned well-screened openings. Use sand having a gradation that will allow no more than 10% of pack material to pass through the screen slots.

2. Take at least one sample (1/2 to 1 pint in size) from each shipment of granular material, assign an identification number, and store it with the soil samples. Record the identification number on the sketch of each installation for which that material was used.

3. The specifications of the proposed sand-pack material should be submitted by the contractor for approval before use. Describe each sample in terms

of lithology, grain-size distribution, and source (company from which it was purchased and the pit or quarry of origin). This material should be clean, inert, and siliceous. Use well-sorted (poorly graded) sand, like No. 8-12 or a similar material, with approximately 10% passing the design slot size.

G. It is desirable that all padlocks at a given site can be opened by the same key. The numbers on the locks should be noted and then rubbed off the back.

H. Safety equipment should be specified by the site health and safety officer. In all cases, the minimum physical protection should include a hard hat, safety glasses, gloves, steel-toed leather boots, hearing protection, and coveralls for splash protection and cold weather.

I. Typical well construction features are in Appendixes 5.3 and 5.4. However, specific contract requirements may alter some of the components or values. When installed as a piezometer or well point (for water levels only), the well configuration may vary significantly from these appendixes. After well development is complete, indicate the water level on the well construction diagram.

J. When applicable, use PVC centralizers to assure the uniform and complete annular filling by granular backfill, seal, and grout materials. Fasten centralizers to the well casing by mechanical fasteners and radially space them around the casing at 120° or 90° intervals. On the Borehole/Well Construction Field Data Log form (Appendix 5.2), provide a description of the fastening device and centralizer that includes their locations.

K. If specified, place a sand pack (granular backfill or gravel pack) in the annulus next to the well screen in all monitoring wells. The sand pack ensures continuous flow capability from the natural formation to the well bore.

1. Fill the annulus between the well screen and borehole wall with silica sand.

2. For wells deeper than approximately 50 ft or as determined by the site manager, use a tremie pipe to place the sand pack. Pump sand slurry composed of sand and potable water through the tremie pipe into the annulus throughout the entire screened interval and over the top of the screen.

3. It is necessary to pump sufficient sand slurry to cover the screen after the sand pack has densified and settled. As a general rule of thumb, apply at least a 4-ft-thick layer of sand slurry over the top of a 10-ft-long screen. Increase the sand pack thickness by 2 ft for each additional 5 ft of screen. The top of a 30-ft-long screen should be 12 ft deeper than the top of the sand pack after emplacement.

4. Ascertain the depth of the top of the sand with an acceptable measuring device or the tremie pipe and verify the thickness of the sand pack. If necessary, add more sand to bring the top of the sand pack to the proper elevation.

5. Under no circumstances should the sand pack extend into any aquifer other than the one to be monitored. In most cases, the well design can be modified to allow for a sufficient sand pack without the threat of cross flow between producing zones.

6. The site manager is the only individual authorized to modify an existing well design.

7. In materials that will not maintain an open hole, leave the hollow-stem augers in the hole during sand pack placement to the extent practical. Remove them as the level of the sand pack rises above the bottom of the augers.

L. Place a bentonite seal between the sand pack and grout to prevent infiltration of cement into the filter pack and the well. In special circumstances, an open borehole may be drilled to a depth below where the screen is set. If grout is used to seal off a lower aquifer or as backfill up to the proper level, place a bentonite seal above the grout before the casing, screen, and sand pack are introduced. Allow the grout to set up for a minimum of 12 to 24 hrs before placing the seal. Place the bentonite seal in the monitoring well as described below.

1. Fill the annulus between the well casing and borehole with a bentonite seal at least 2 ft thick (vertically) in the interval between the sand pack and the grout seal.

2. Use bentonite pellets. The pellets should have a minimum purity of 90% montmorillonite clay and a minimum dry bulk density of 75 lb/ft^3 for 1/2-inch pellets (as provided by American Colloid) or the equivalent. Pour the bentonite pellets directly down the annulus. Avoid introducing pellets into the well bore. Place a cap over the top of the well casing before pouring the bentonite pellets from the bucket. Pour the pellets from different points around the casing to ensure even application. A tremie pipe may be used to redistribute and level out the top of the seal.

3. For the wells deeper than approximately 50 ft, the bentonite may either be poured as pellets or introduced as a slurry. The method should be determined by the site manager after evaluating the condition of the well and borehole wall. If there are no centralizers in the upper portions of the casing, manipulate the casing to prevent pellets from hanging up in the narrow annulus and to allow them to settle to the bottom as rapidly as possible.

4. If a slurry of bentonite is used as annular seal, prepare the slurry by mixing powdered or granular bentonite with potable water. The slurry should be of sufficiently high specific gravity and viscosity to prevent its displacement by the grout that will be placed above. Regardless of depth and depending on fluid viscosity, a few handfuls of bentonite pellets may be dumped in to solidify the surface of the bentonite slurry as a precaution.

5. Before pumping the seal, be sure the sand pack has ceased settling by measuring the depth of the top of the sand with the tremie pipe. The sand pack should provide an adequate cover over the screen.

6. Visually check the condition of the slurry by pumping into a bucket or onto the ground. Retract the tremie pipe 3 ft from the top of the sand pack and begin pumping.

7. In materials that will not maintain an open hole, leave the hollow-stem augers in the hole during bentonite seal placement to the extent practical. Remove them as the level of the bentonite rises above the bottom of the augers.

8. In all situations, use a 2 to 4-ft bentonite seal. Tag the top of the seal by an acceptable measuring device or tremie pipe to verify that the proper thickness of seal has been placed in the annulus.

9. Until the specified quantity of bentonite has been placed in the well annulus, repeat the application and verification.

M. Place grout from the top of the bentonite seal to the surface and allow a minimum of 24 to 48 hrs after the bentonite seal has been placed to allow it to set up. Only Type I or Type II cement without accelerator additives may be used. Place grout in the monitoring wells as described below.

1. Fill the annulus between the well casing and borehole wall with grout.

2. Place the grout from a grout tremie pipe.

3. The tremie pipe should normally consist of 1.25-inch PVC or steel pipe. One-inch rolled, thin-walled polypipe has been used with success in some cases.

4. Pump the grout through this pipe to the bottom of the open annulus until undiluted grout flows from the annulus at the ground surface.

5. The grout should consist of a neat cement mix composed of 4 lbs of commercial bentonite and approximately 7.5 gallons of water added to each 94-lb bag of cement. Use only grout mixed with approved water.

6. In materials that will not maintain an open hole, leave the hollow-stem augers in the hole during grouting to the extent practical. Remove them as the level of the grout rises above the bottom of the augers.

7. While the grout is still green, add more grout to compensate for the removed casing or auger and tremie pipe and to ensure that the top of the grout is at or above the ground surface.

8. The protective casing should now be placed.

9. After the grout has set (about 48 hrs), fill any depression in the grout caused by settlement with a grout mix similar to that described above.

N. Install protective casing around all monitoring wells. Exceptions may be made on a case-by-case basis. The minimum elements in the protection design include those listed below.

1. The protective steel cap should keep precipitation out of the protective casing and should be secured to the casing by padlocks.

2. Set a 5-ft (minimum) length of black iron pipe or galvanized pipe so that the top of the pipe is about 1.5 to 3 ft above the ground surface and grout it in place as shown in Appendixes 5.3 and 5.4.

3. Use the pipe diameter of 8 inches for 4-inch wells and 6 inches for 2-inch wells (depending on approved borehole size). A drain hole near ground level that is 0.5 inch in diameter is permitted.

4. Provide a protective steel cap and secure it to the top of each protective casing.

5. Mark the location ID on the inside and outside of the cover with indelible ink and on the protective casing with paint.

O. In addition to the protective casing, the installation of guard posts is recommended in areas where vehicle traffic might pose a hazard.

Guard posts shown in Appendix 5.5 consist of steel posts that are 3 inches in diameter or tee-bar driven steel posts. Three are radially located 4 ft around each well and driven 2 ft below the ground surface, having a minimum of 4 ft above the ground surface with flagging in areas of high vegetation. Each post may be cemented in place.

P. In the event that a borehole must be abandoned for failure to reach the specified depth (or any other cause), grout the borehole with a tremie pipe from the bottom up with grout mixed to the specifications described in Section 3.3.M.5.

Q. In the event that a well must be abandoned for failure to reach specified depths, loss of tools, or inadvertent contamination, rip the screened interval with an appropriate tool. Grout the well with a tremie pipe (from the bottom up) with grout mixed to the specifications described in Section 3.3.M.5.

3.4 Postoperation

3.4.1. Field

A. Ensure that all equipment is accounted for, decontaminated (see SOP 1.6, General Equipment Decontamination), and ready for shipment.

B. Restore the site to predrilling conditions as specified in the RIP.

C. Make sure all monitoring wells are properly labeled and the location ID is readily visible on the protective casing.

3.4.2. Documentation

A. Record cleanup and hole abandonment procedures and any uncompleted work (like site restoration or long-term monitoring) in the logbook.

B. Complete logbook entries, verify the accuracy of entries, and sign/initial all pages.

C. Review data collection forms for completeness.

3.4.3. Office

A. Deliver original forms and logbooks to the site manager for technical review. He/she will review, sign forms, and transmit to the document control officer (copies to the files) for eventual delivery to the Department of Energy.

B. Inventory equipment and supplies. Repair or replace all broken or damaged equipment. Replace expendable items. Return equipment to the equipment manager and report incidents of malfunction or damage.

4. SOURCES

Barcelona, M. J., J. P. Gibb, J. A. Helfrich, and E. E. Garske. 1985. "Practical Guide to Groundwater Sampling." U.S. Environmental Protection Agency report EPA/600/2-85/104. Washington, D.C.: U.S. Government Printing Office.

DOE. 1985. "Field Technical Representative Manual." 2d ed. U.S. Department of Energy, Uranium Mill Tailings Remedial Action Project Office, Albuquerque Operations Office document, June 1985. Albuquerque, New Mexico.

5. APPENDIXES

5.1. Well Completion Information Form

5.2. Borehole/Well Construction Field Data Log Form

5.3. Typical Construction of Overburden Well

5.4. Typical Construction of Bedrock Well

5.5. Post Placement Around Well

5.6. Data Form Completion

APPENDIX 5.1

WELL COMPLETION INFORMATION FORM

WELL COMPLETION INFORMATION

PAGE 1 OF 2

FACILITY CODE _____

LOCATION ID _____

ACCEPTANCE CODE _____

OWNER CODE _____

INSTALLER CODE _____

INSTALLATION DATE _____

CASING ELEVATION (FT MSL) _____

CASING DEPTH (FT) _____

CASING DIAMETER (IN) _____

SEAL END DEPTH (FTFD) _____

SCREEN MATERIAL _____

RISER MATERIAL _____

FILTER PACK LENGTH (FT) _____

FORMATION OF COMPLETION (US/RIC) _____

WELL TYPE CLASSIFICATION _____

WELL COMPLETION METHOD _____

ZONE OF COMPLETION _____

OPEN/SCREEN DEPTH (FTFD) _____

OPEN/SCREEN LENGTH (FT) _____

OPEN/SCREEN AREA (IN^2 /FT) _____

FLOW RELATIONSHIP _____

CAP MATERIAL _____

CAP TYPE _____

WELL TYPE CLASSIFICATIONS:
- M - MONITOR WELL
- P - PRODUCTION WELL
- T - TEST WELL
- O - OTHER (SPECIFY)

CAP TYPES:
- LS - LOCKING
- SL - SLIP-ON
- TR - THREADED
- NO - NONE
- SO - SCREW ON
- OT - OTHER (SPECIFY)

CASING, CAP, RISER MATERIALS:
- BR - BRASS
- CT - CONCRETE
- CU - COPPER
- FI - FIBERGLASS
- GI - GALVANIZED IRON
- IR - WROUGHT IRON
- SS - STAINLESS STEEL
- OM - OTHER METAL
- TE - TEFLON
- PV - PVC
- RS - ROCK OR STONE
- ST - STEEL
- TI - TILE
- CS - COATED STEEL
- WO - WOOD
- NO - NONE
- OT - OTHER (SPECIFY)

FLOW RELATIONSHIPS:
- U - UPGRADIENT
- D - DOWNGRADIENT
- C - CROSS GRADIENT
- O - ON SITE
- N - NOT KNOWN
- B - BACKGROUND

ZONES OF COMPLETION:
- A - ARTESIAN
- B - ANISOTROPIC
- C - CONFINED
- H - AQUIFARD
- G - AQUICLUDE
- I - ISOTROPIC
- M - MULTI-SYSTEM
- S - SEMI-CONFINED
- U - UNCONSOLIDATED

WELL COMPLETION METHODS:
- C - POROUS CONCRETE
- F - GRAVEL PACK
- H - HORIZONTAL GALLEY
- O - OPEN END
- P - PERFORATED/SLOTTED
- S - SCREEN
- T - SAND POINT
- W - WALLED OR SHORED
- X - OPEN
- O - OTHER (SPECIFY)

NOTE : FTFD = FEET FROM DATUM

ACCEPTANCE CODES: A-ACCEPTABLE R-RECONNAISSANCE U-UNACCEPTABLE N-NOT DETERMINED

COMPLETE BOLDED DATA FOR ENTRY INTO TMS
WCD-005 (3/88)

FORM COMPLETED BY/DATE _____

TECHNICAL REVIEWER/DATE _____

APPENDIX 5.1, Continued

WELL COMPLETION INFORMATION FORM

WELL COMPLETION INFORMATION

PAGE 2 OF 2

FACILITY CODE _____

LOCATION ID _____ INSTALLATION DATE _____

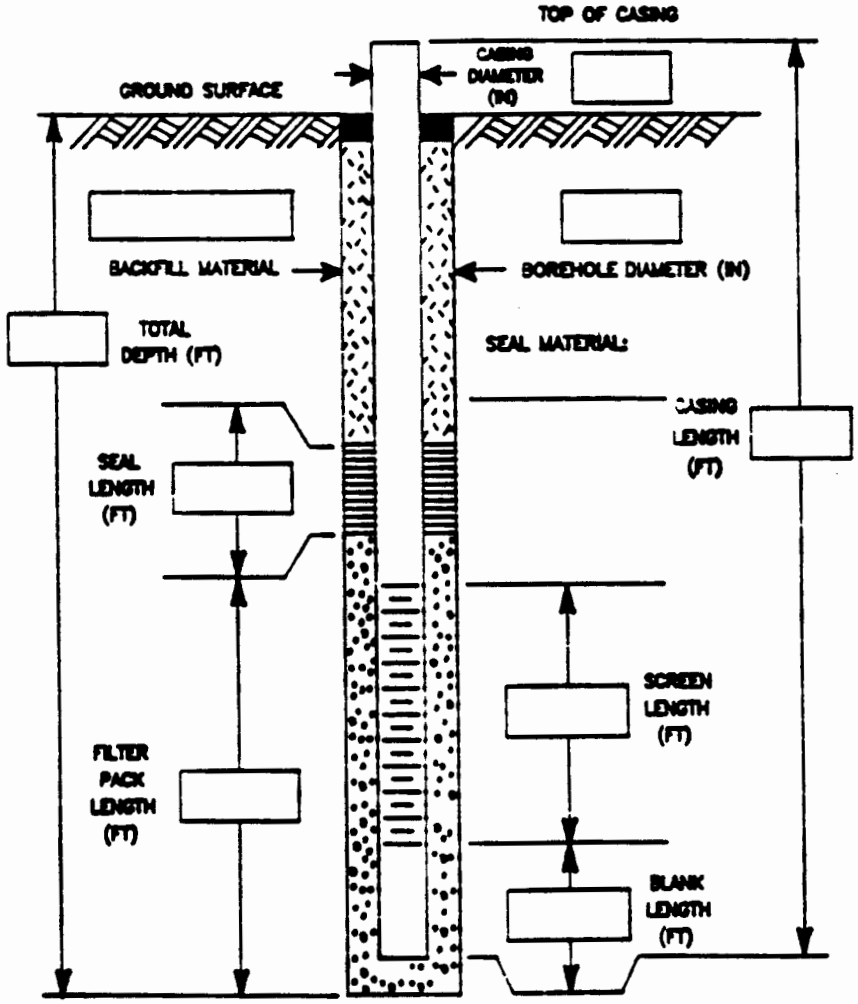

FILTER PACK MATERIAL: _____

COMMENTS _____

COMPLETE SHADED AREA FOR ENTRY INTO TIMS

WCD-006 (1/88)

FORM COMPLETED BY/DATE _____ TECHNICAL REVIEWER/DATE _____

APPENDIX 5.2

BOREHOLE/WELL CONSTRUCTION FIELD DATA LOG

BOREHOLE / WELL CONSTRUCTION FIELD DATA LOG

FACILITY CODE _____ LOCATION ID _____ FIELD REP _____

LOGGER CODE _____ DRILLER CODE _____ RIG TYPE _____

INSTALLER CODE _____ COMPLETION DATE _____ ACCEPTANCE CODE _____

BOREHOLE SUMMARY

BIT TYPE	HOLE DIAM (in)	END ● DEPTH (ft)	FLUID TYPE

CASING SUMMARY

CASING* TYPE	DESCRIPTION	DIAM (in)	END ▲ DEPTH (ft)

* P – Protective S – Screen O – Open N – None

▲ Depth from Top of Casing

CONSTRUCTION TIME LOG

ACTIVITY	START DATE	START TIME	END TIME
DRILLING			
CASING			
FILTER PACK			
SEAL			
BACKFILL			
DEVELOPMENT			
OTHER			

WELL CONSTRUCTION

TYPE* CODE	DESCRIPTION	END ● DEPTH (ft)

* B – Backfill S – Seal F – Filter Pack

● Depth From Ground Surface

WELL DEVELOPMENT

COMMENTS _____

ACCEPTANCE CODES: A–ACCEPTABLE R–RECONNAISSANCE U–UNACCEPTABLE N–NOT DETERMINED

COMPLETE BOLDED DATA FOR ENTRY INTO TIMS

SWC-044 (1/88) FORM COMPLETED BY/DATE _____ TECHNICAL REVIEWER/DATE _____

APPENDIX 5.3

TYPICAL CONSTRUCTION OF OVERBURDEN WELL

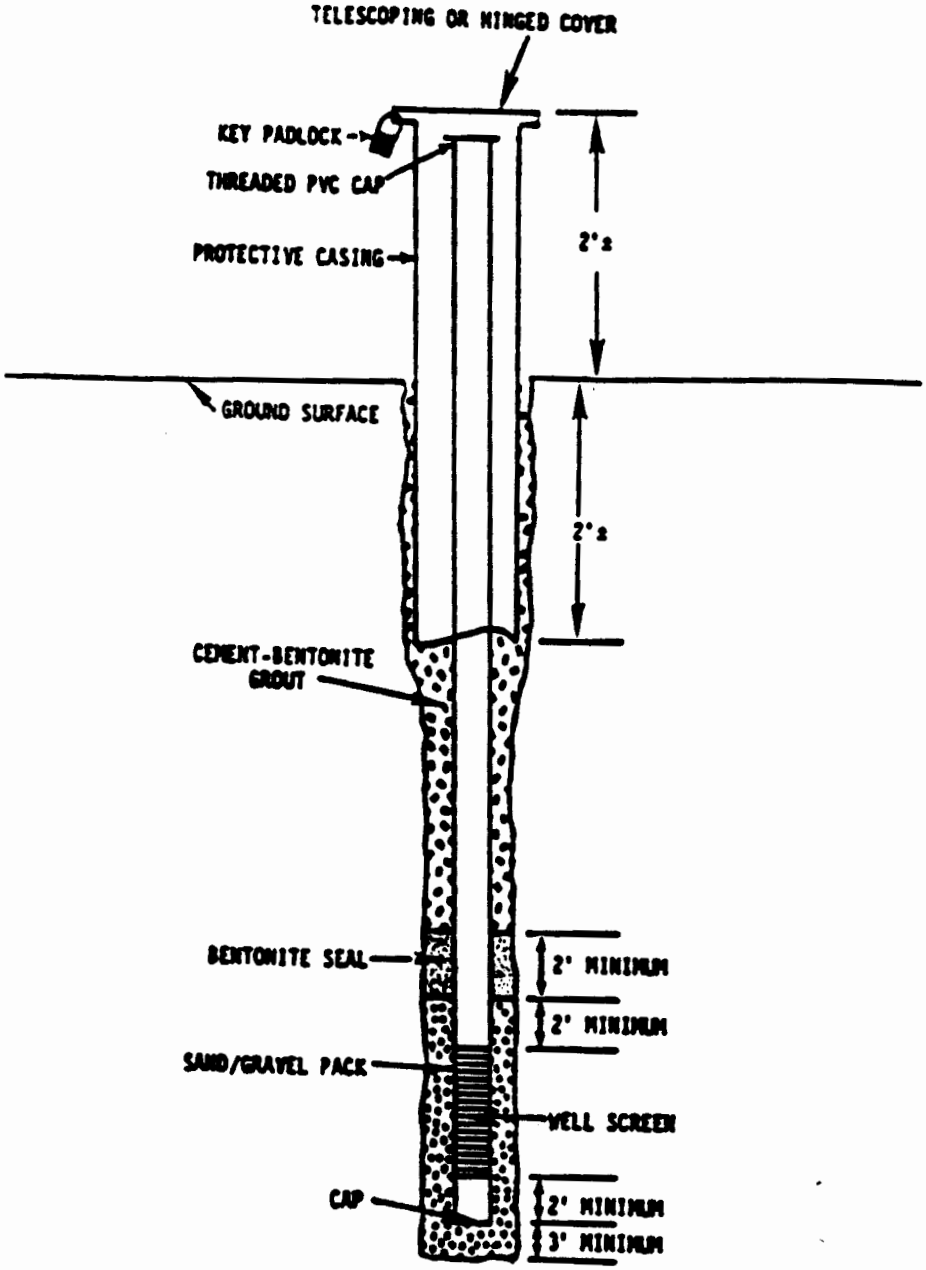

TYPICAL CONSTRUCTION OF OVERBURDEN WELL

APPENDIX 5.4

TYPICAL CONSTRUCTION OF BEDROCK WELL

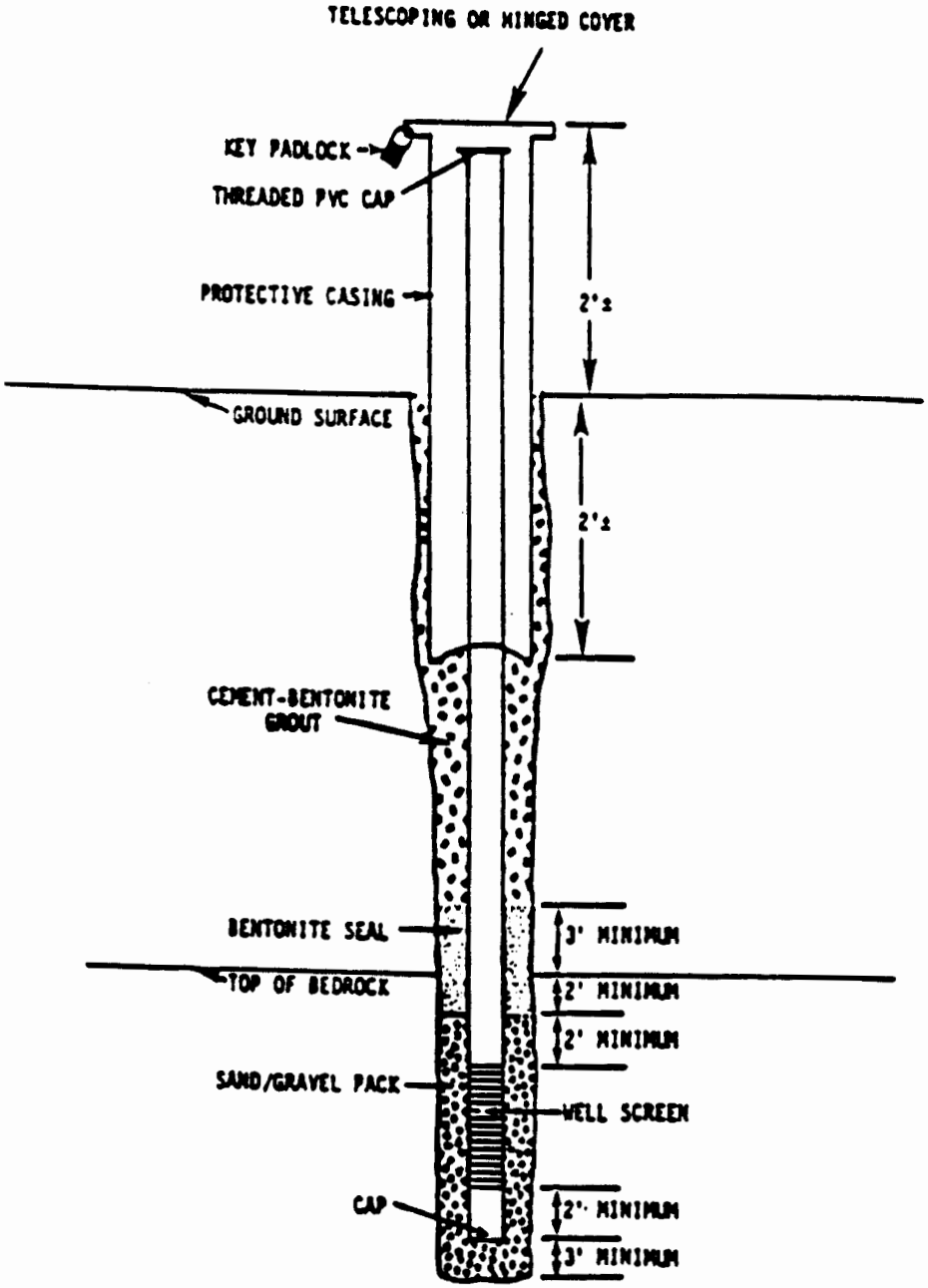

TYPICAL CONSTRUCTION OF BEDROCK WELL

APPENDIX 5.5

POST PLACEMENT AROUND WELL

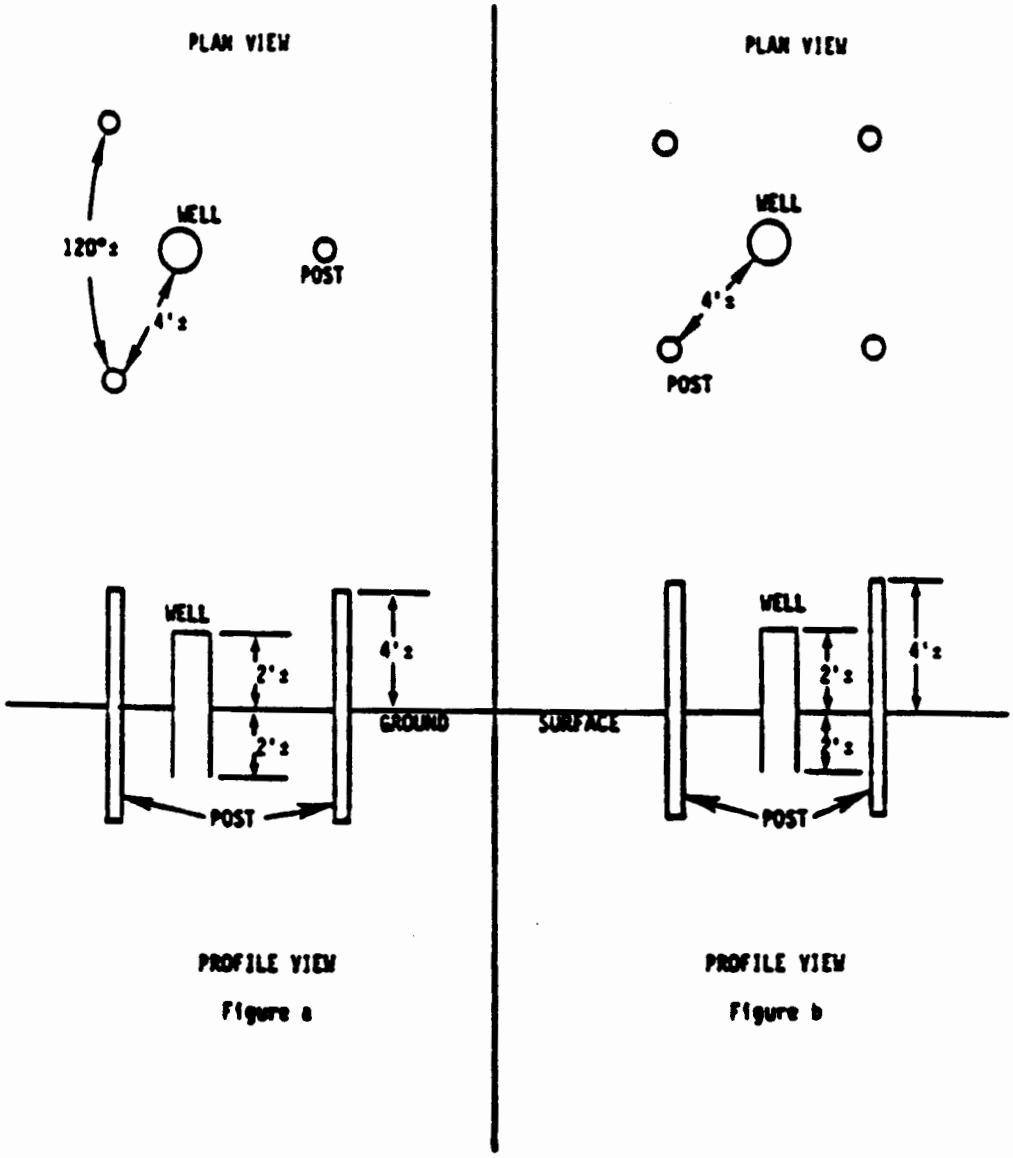

POST PLACEMENT AROUND WELL

APPENDIX 5.6

DATA FORM COMPLETION INSTRUCTIONS

Use a pen with black ink that is not water soluble (not a felt-tip pen). Make an entry in each blank. Where there is no data entry, enter UNK for Unknown, NA for Not Applicable, or ND for Not Done. If any procedure was not performed as prescribed, give the reason for the change or omission on the form. To change an entry, draw a single line through it, add the correct information above it, and initial the change.

WELL COMPLETION INFORMATION FORM

1. Facility code. Five-character code abbreviating the facility name where program activity is being conducted. The first three characters indicate the facility, and the remaining two numbers designate the specific site within the facility.

2. Location ID. A four-character code assigned sequentially to each borehole, test pit, or surface location where physical, chemical, biological, radiological, and other measurements are taken.

3. Acceptance Code. One-character code assigned by the installation manager.

4. Owner Code. A three-character or four-character code identifying the owner of a well that is being installed.

5. Installer Code. Three-character or four-character code identifying the company responsible for installing and completing a well.

6. Installation Date. The date when the well was installed in the format DD-MMM-YY (01-JAN-88).

7. Filter Pack Length (Ft). The length of the filter pack surrounding the screened portion of the casing.

8. Formation of Completion (US/RC). (US/RC) designation.

9. Well Type Classification. One-character code that designates the type of well being constructed. Valid codes are listed on page 1 of the Well Completion Information form.

10. Well Completion Method. One-character code describing the method used to complete a well or the nature of the openings that allow water to enter a well. Valid codes are listed on page 1 of the Well Completion Information form.

11. Zone of Completion. One-character code designating the basic water-bearing zones at which a well is completed. Valid codes are listed on page 1 of the Well Completion Information form.

12. Casing Elevation (Ft MSL). Top of casing elevation. Casing elevation will be filled out at completion of the field investigation.

13. Casing Length (Ft). Distance from the top of casing (in feet and tenths of feet) at which the bottom of the casing is placed.

14. Casing Diameter (In). Diameter of casing installed in inches.

15. Seal End Depth (FTFD). Depth below ground surface (in feet and tenths of feet) at which the bottom of the seal is placed.

16. Screen Material. A two-character code describing the type of screen material. Valid codes are listed on page 2 of the Well Completion Information form.

17. Riser Material. A two-character code describing the riser material. Valid codes are listed on page 1 of the Well Completion Information form.

18. Open/Screen Depth (FTFD). Depth in feet and tenths of feet from top of casing to top of screen.

19. Open/Screen Length (Ft). Total length of the screen in feet and tenths of feet.

20. Open/Screen Area (In^2/Ft). Open area of screen in inches squared per foot.

21. Flow Relationship. One-character code designating the flow relationship. Valid codes are listed on page 1 of the Well Completion Information form.

22. Cap Material. Two-character code describing the cap material. Valid codes are listed on page 1 of the Well Completion Information form.

23. Cap Type. A two-character code describing the type of cap used in the installed well. Valid codes are listed on page 2 of the Well Completion Information form.

24. Comments. Any additional information.

APPENDIX 5.6, Continued

BOREHOLE/WELL CONSTRUCTION FIELD DATA LOG

1. Facility Code. Five-character code abbreviating the facility name where program activity is being conducted. The first three characters indicate the facility, and the remaining two numbers designate the specific site within the facility.

2. Location ID. A four-character code assigned sequentially to each borehole, test pit, or surface location where physical, chemical, biological, radiological, and other measurements are taken.

3. Field Rep. The name of the field representative.

4. Logger Code. Three-character or four-character code identifying the company responsible for collecting the information recorded on the form.

5. Driller code. Three-character or four-character code identifying the company responsible for drilling the borehole.

6. Rig Type. Manufacturer and model of rig.

7. Installer Code. Three-character or four-character code identifying the company responsible for installing and completing a well.

8. Completion Date. Date when well was completed in the format DD-MMM-YY (01-JAN-88).

9. Acceptance Code. One-character code assigned by the facility manager.

10. Borehole Summary

    a. Bit Type. The type of bit used.

    b. Hole Diam (In). Diameter of borehole in inches.

    c. End Depth (Ft). Depth from the ground surface to the bottom of the borehole (in feet and tenths of feet).

    d. Fluid Type. Type of fluid used during the drilling phase of well installation.

11. Casing Summary

    a. Casing Type. One-character code describing the type of casing material used. The codes are listed below.

    b. Description. Describes the casing materials used (for example, Schedule 40 PVC) in well construction.

c. Diameter (In). Diameter of casing in inches.

d. End Depth (Ft). Depth (in feet and tenths of feet) from the top of the casing to the bottom of the casing.

12. Well Construction

a. Type Code. One-character code describing the material used for filling the annulus space in borehole.

b. Description. Describes the materials used in well construction (bentonite pellets. for example) to fill the annulus space in borehole.

c. End Depth (Ft). Depth (from the ground surface) where the materials for well construction are placed in the borehole in feet and tenths of feet.

13. Construction Time Log

a. Start Date. The date construction started.

b. Start Time. The time construction started.

c. End Time. The time when construction ended.

14. Well Development. Any further developments during well construction.

15. Comments. Any additional information.

STANDARD OPERATING PROCEDURE 4.4

MONITORING WELL DEVELOPMENT

1. PURPOSE

To remove foreign materials that may have been introduced into the groundwater, well annulus, or well screen during well installation and to facilitate hydraulic communication between the screened formation and the monitoring well.

2. DISCUSSION

The Remedial Investigation Plan (RIP) contains specific details about the method and equipment to be used for developing the monitoring well. Collection and measurement of samples and documentation of data will be performed as described in the associated procedures.

Monitoring well development removes the fines from the well or aquifer formation near the screen and corrects damage that occurs during drilling. All well installation procedures create a skin on the borehole wall. There are four primary methods for developing monitoring wells: overpumping, rawhiding, jetting, and surging.

A. Overpumping involves pumping the well down as low as possible and allowing it to refill. The increased velocities created by refilling remove fines. This method is not very effective, because the water flow is in one direction and at relatively low velocities.

B. Rawhiding is a modification of overpumping. After the water is pumped to the surface, it is either allowed to run back into the well through a foot valveless pump or poured back down the well. This method generates two-directional flow and is superior to overpumping.

C. Jetting involves lowering a pipe into the well with a series of water jets on the end. The jets point horizontally. The high-pressure water pumped through the jets flushes fines from the formation and breaks the skin caused by drilling. As with the other methods, fines must occasionally be pumped from the well during development. An external water supply is needed for jetting. External water is introduced into the formation and alters the hydrochemistry. These are two major disadvantages of the jetting method.

D. Surging involves raising and lowering a surge or swab block inside the well. The resulting motion of the water removes the borehole skin and fines from the formation. The fines and water must occasionally be removed from the well with a sand bailer to prevent sand locking of the surge block. The rubber or viton seals on the surge block are the same diameter as the inside of the well or 1/2 inch smaller if surging is conducted inside the screened interval. A 3-ft stroke is typical.

   Surging can also be implemented with high-pressure air. A high-pressure air pipe is lowered into the well, and surges of air are introduced. Water may be literally blown out of the top of the well, and water can be pumped out as the

air surging progresses. However, air surging can introduce air into the formation (altering the hydrochemistry) and become entrained in the screens (reducing flow rates). Plastic screens can also be damaged if the air surge is too violent. A specially fabricated air swab can be used to prevent these types of damage.

E. Surging with a vented (pressure-relief) block (Appendix 5.2) and rawhiding are the preferred methods for well development, although no one method is appropriate for all situations.

3. PROCEDURES

3.1. Associated Procedures

Before every operation, a review of the SOPs 1.1-1.10 is necessary. These SOPs contain information on the performance of field activities. They should be consulted for specific information about equipment and supplies; sample collection, preservation, packaging, and shipping; decontamination procedures; and documentation requirements. Procedures directly associated with this SOP are listed below.

SOP No.	SOP Title
1.1	General Instructions for Field Personnel
1.6	General Equipment Decontamination
2.2	Field Measurements on Ground and Surface Water Samples
3.1	Water Level Measurement
4.3	Monitoring Well Installation
6.1	Health and Safety Monitoring of Combustible Gas Levels
6.2	Health and Safety Monitoring of Organic Vapors with a Photoionization Detector
6.3	Health and Safety Monitoring of Organic Vapors with a Flame Ionization Detector

3.2. Preparation

3.2.1 Office

A. Review the RIP and SOPs listed in Section 3.1.

B. Coordinate schedules/actions with the installation staff.

C. Obtain appropriate permission for property access.

D. Assemble the equipment and supplies listed in Appendix 5.1. Ensure the proper operation of all sampling equipment.

E. If samples are to be collected for analyses, notify the laboratory of sample types, the number of samples, and the approximate arrival date. In addition, contact the carrier that will transport samples to obtain information on regulations and specifications.

F. Ensure that permission to discharge development water has been obtained or coordinate efforts to purchase appropriate containment vessels for development.

3.2.2. Documentation

A. Obtain a logbook from the QA officer.

B. Record results of the equipment check in the logbook.

C. Obtain a sufficient number of the appropriate ER Program data collection forms (see INDEX TO SOPs).

D. Consult the ER Program data administrator for a current list of information management codes, location IDs, and sample numbers used in the completion of data forms.

3.2.3. Field

A. Decontaminate all equipment before developing each well according to SOP 1.6, General Equipment Decontamination.

B. Assemble containers for the temporary storage of water produced during well development. The containers must be structurally sound, compatible with anticipated contaminants, and field manageable.

NOTE: Truck-mounted tanks may be required for this operation.

3.3. Operation

Perform the development as soon as practical after well installation, but no sooner than 48 hrs after grouting is completed. Do not use any dispersing agents, acids, or disinfectants to enhance the development of the well. Do not add water to aid development except under the special conditions defined below. If problems or unusual conditions are encountered, notify the site manager as soon as possible.

A. Assemble the necessary equipment on a plastic sheet outside of the splash range.

B. Record pertinent information in the logbook and on the Well Completion Information form. A copy of this form and instructions for completing the form are provided in SOP 4.3, Monitoring Well Installation.

C. Open the monitoring well and take the air monitoring reading at the top of the casing and in the breathing zone (see SOP 6.1, Health and Safety Monitoring of Combustible Gas Levels; SOP 6.2, Health and Safety Monitoring of Organic Vapors with a Photoionization Detector; and SOP 6.3, Health and Safety Monitoring of Organic Vapors with a Flame Ionization Detector).

D. Measure depth-to-water and the total depth of the monitoring well according to SOP 3.1, Water Level Measurement.

E. Develop the well until the well is free of sediment and the appropriate volumes of water have been removed (see E.4. below). Sediment free is loosely defined as 0.01 ml of sediment in a 1000-ml Imhoff cone. If the well is not free of sediment after the appropriate volumes of water have been removed, continue until twice the appropriate volume of water has been removed. Do not exceed twice the volume without consulting the site manager.

1. Note the initial color, clarity, and odor of the water.

2. Measure and record the initial pH, temperature, and specific conductance of the water according to SOP 2.2, Field Measurements on Ground and Surface Water Samples.

3. Containerize all water produced by development in contaminated areas or areas suspected of contamination. Clearly label each container with the location ID. Base the determination of an appropriate disposal method on the first round of analytical results from each well.

4. For those wells where the boring was made without the use of drilling fluid (mud or water), remove 5 times the standing water volume in the well (well screen and casing plus saturated annulus). Should recharge be so slow that 5 volumes could not be removed in one day or the water is not sediment free after this 5-volume removal, the site manager will select an alternate procedure for verifying that the well is properly developed.

5. Do not add water to the well to assist development without prior approval by the site manager. If a well cannot be cleaned of mud to produce formation water because the aquifer yields insufficient water, small amounts of potable water may need to be injected to clean up this poorly yielding well. This may be accomplished by dumping in buckets of water. When most of the bentonite is out, continue development with formation water only. It is essential that at least 5 times the amount of water injected must be produced back from the well in order to assure that all injected water is removed from the formation. When most of the bentonite is out, continue development with formation water only.

6. For those wells where the boring was made or enlarged with the use of drilling fluid (mud or water), remove 5 times the measured amount of total fluids lost while drilling <u>plus</u> 5 times the standing water volume as defined above. Use the same procedure (of adding more water) for cases of slow recharge, discolored water, or water that is not sediment free.

7. Note the final color, clarity, and odor of the water.

8. Measure and record the final pH, temperature, and specific conductance of the water according to SOP 2.2, Field Measurements on Ground and Surface Water Samples.

9. Complete the appropriate data entry requirements on the Well Completion Information form to document well development. A copy of the form and instructions for completing it are in SOP 4.3, Monitoring Well Installation.

3.4. Postoperation

3.4.1. Field

A. Ensure that all equipment is accounted for, decontaminated (see SOP 1.6, General Equipment Decontamination), and ready for shipment.

B. Restore the site to the presampling conditions as specified in the RIP.

C. Make sure all monitoring well locations are properly staked and the location ID is readily visible on the protective casing.

3.4.2. Documentation

A. Record cleanup and hole abandonment procedures and any uncompleted work (like site restoration or long-term monitoring) in the logbook.

B. Complete logbook entries, verify the accuracy of entries, and sign/initial all pages.

C. Review data collection forms for completeness.

3.4.3. Office

A. After the first round of analytical results have been received, determine and implement the appropriate water disposal method.

B. Deliver original forms and logbooks to the site manager for technical review. He/she will review, sign forms, and transmit to the document control officer (copies to the files) for eventual delivery to the Department of Energy.

C. Inventory equipment and supplies. Repair or replace all broken or damaged equipment. Replace expendable items. Return equipment to the equipment manager and report incidents of malfunction or damage.

D. If samples have been collected for analysis, contact the laboratory to ensure that samples arrived safely and instructions for sample analyses are clearly understood.

4. SOURCES

Barcelona, M. J., J. P. Gibb, J. A. Helfrich, and E. E. Garske. 1985. "Practical Guide to Groundwater Sampling." U.S. Environmental Protection Agency report EPA/600/2-85/104. Washington, D.C.: U.S. Government Printing Office.

Gass, Tyler E., "Monitor Well Development." 1986. Water Well Journal 40, no. 1: 52-55.

Schalla, Ronald, and Robert W. Landick. 1986. "A New Valved and Air-Vented Plunger for Developing Small Diameter Monitor Wells," Ground Water Monitoring Review 6, no. 2: 77-80.

5. APPENDIXES

5.1. Equipment and Supplies Checklist

5.2. Surge Block Schematics

APPENDIX 5.1

EQUIPMENT AND SUPPLIES CHECKLIST

_____ pH Meter

_____ Electrical conductivity meter

_____ Distilled water

_____ Stopwatch

_____ Water level measurement probe

_____ 1000-ml Imhoff cone

_____ Plastic sheet

APPENDIX 5.2

SURGE BLOCK SCHEMATICS

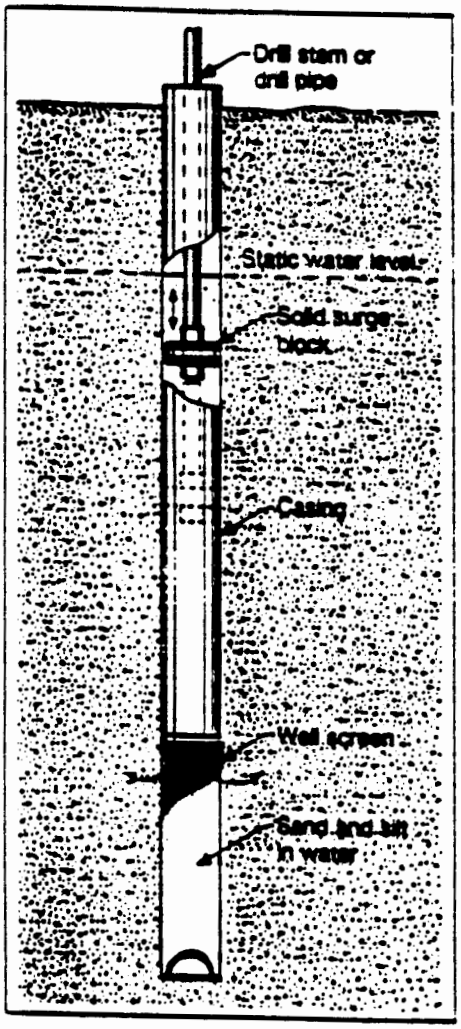

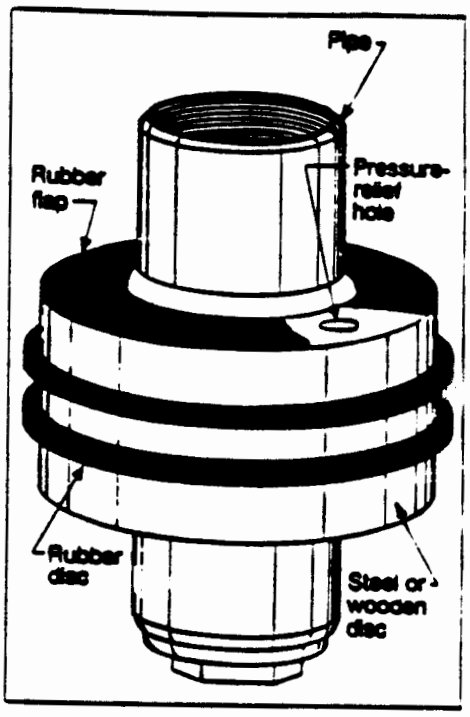

STANDARD OPERATING PROCEDURE 4.5

BOREHOLE GAMMA LOGGING

1. PURPOSE

To provide guidelines for logging gamma emissions at various depths in augered boreholes.

2. DISCUSSION

The Remedial Investigation Plan (RIP) provides information about the borehole logging requirements for a given site. Borehole logging is an accepted method for rapidly estimating the presence and activity relative to background for gamma-emitting radionuclides in subsurface soils. It is important to note, however, that borehole logging only approximates the soil radionuclide concentrations. Soil moisture and configurations of subsurface strata will affect the results obtained. Pure alpha-emitting or beta-emitting radionuclides will not be detected.

The general locations of boreholes are usually determined from the results of surface gamma surveys. Depending on the size of the potentially contaminated area, one or more holes should be drilled inside the area of contamination at points where surface radiation levels are most elevated above background. Several holes are needed on all sides of the apparent contaminated areas, as determined from the gamma survey. If a hole outside the area of increased surface gamma radiation shows contamination, another hole is needed beyond that point. The locations of boreholes to be logged will be selected in a gridded pattern at sites where large areas are evenly contaminated.

Because data are routinely compared from one borehole to another, the boreholes should be constructed in a consistent manner. Borehole construction parameters that should be standardized include borehole size, installation or deletion of casings, and casing material.

3. PROCEDURE

3.1. Associated Procedures

Information that applies to most field activities is provided in SOPs 1.1-1.10. In addition to the RIP, those SOPs provide guidance that may supplement the information in this procedure. They should be consulted as necessary to obtain specific information about equipment and supplies; sample collection, preservation, packaging, and shipping; decontamination procedures; and documentation requirements. Procedures directly associated with this SOP are listed below.

SOP No.	SOP Title
1.1	General Instructions for Field Personnel
1.6	General Equipment Decontamination
5.1	Soil and Rock Borehole Logging and Sampling

SOP No.	SOP Title
6.5	Screening Soil Samples for Alpha Emitters
6.6	Use of Gamma Spectrometry Systems as a Screen for Gamma-Ray-Emitting Radionuclides in Soil Samples
6.7	Near-Surface and Soil Sample Screening for Low-Energy Gamma Radiation Using the FIDLER
6.15	Measurement of Gamma-Ray Fields Using a Sodium Iodide (NaI) Detector

3.2. Preparation

3.2.1. Office

A. Review the RIP and SOPs listed in Section 3.1.

B. Coordinate schedules/actions with the installation staff.

C. Obtain appropriate permission for property access.

D. Assemble the equipment and supplies listed in Appendix 5.1. Ensure the proper operation of all sampling equipment. Make sure that the calibration dates are current.

E. If samples are to be shipped, notify the analytical laboratory of sample types, the number of samples, and the approximate arrival date. Contact the carrier that will transport samples to obtain information on regulations and specifications.

3.2.2. Documentation

A. Obtain a logbook from the QA officer.

B. Record results of the equipment check and calibration dates in the logbook.

C. Obtain a sufficient number of the appropriate ER Program data collection forms (see INDEX TO SOPs).

D. Consult the ER Program data administrator for a current list of information management codes, location IDs, and sample numbers used in the completion of data forms.

3.2.3. Field

A. Test the operation of the gamma logging equipment in the manner listed below.

1. Establish a fixed source-to-detector geometry so that the distance between the detector and the source will be reproducible at a later time.

2. Perform a source check of the sodium iodide (NaI) probe and the scaler using a gamma source like Cs-137. Set the scaler to count for 0.1 min and push the count button. Perform 3 measurements and record the average response to the source in the logbook.

3. Compare the results from subsequent source checks to the average from previous results. If measurements vary by more than 10%, obtain a new detector and ratemeter/scaler.

B. Assemble the downhole logger in the manner described below.

1. Connect one end of the signal cable to the fitting on the 44-10 probe.

2. Tie one end of the nylon rope securely to the eyebolt in the top of the probe.

3. Lay the signal cable and the rope side by side extending away from the probe.

4. Use strong tape, like duct tape, to secure the cable and rope together at about 3-ft intervals. Leave a small amount of slack in the signal cable between each taping to allow the rope to stretch when supporting the probe. The cable must not be used to support the probe.

5. Allow the probe to hang by securing the rope at a sufficient height and mark the rope at 6-inch intervals using an indelible marker. Additional tape may be used to indicate the appropriate depth. The full weight of the probe must be suspended from the rope during the marking process to allow for increases in the rope length from stretching.

C. Locate, mark, and avoid sewer lines, buried telephone or electrical cables, gas lines, or other underground hazards.

D. Select background locations in areas known to be free of contamination. Record background locations on the Borehole Log form (Appendix 5.2) and label as background. Include the appropriate location identifications on the labels. Specific instructions for completing the Borehole Log form are outlined in Appendix 5.3, Data Form Completion.

3.3. Operation

3.3.1 Gamma Logging

A. Describe all sampling and background locations on the Borehole Log form (Appendix 5.2). Directions for completing this form are in Appendix 5.3, Data Form Completion.

B. Check out the detection system at least daily in the manner described below.

1. Turn on and test the scaler and scintillometer unit according to the manufacturer's specifications.

2. Check the battery charge. If necessary, replace the batteries.

3. Check the instrument window setting (out). Check the threshold setting (at 100 unless otherwise directed).

4. Check the high voltage setting. It should be set to the appropriate plateau value as determined when calibrated, usually about 700-1000 volts (V).

5. Record the date and time the NaI probe and the scaler were last source checked.

C. Double bag the detector and cable connection in clear plastic for protection against water, abrasion, and contamination. Tape the plastic firmly in place.

D. On a regular basis, check the soil background count rate by conducting 0.1-min measurements in local augered holes that were previously determined to be representative of local background conditions. Maintain a file record of background data. Record the results each time on a Borehole Log form (Appendix 5.2).

E. Before drilling, take a contact surface reading. Noting the depth as surface, record the counts accumulated in 0.1 min in the first row of the Borehole Log form. Identify the borehole on the Borehole Log form by coordinates from the property survey or by the location ID.

F. After drilling, check to see if there is standing water in the augered hole. If there is water, record the depth to the water surface using a weighted tape; do not submerge the NaI probe. Replace the plastic bags on the probe if they become wet or dirty.

G. Lower the detector to the surface of the hole and record the depth on the Borehole Log form as 0.

H. Take a 0.1-min count at this location and record the counts collected. Lower the probe 6 inches at a time and record the count total, count time, and resulting count rate at each interval.

I. Gamma logging results may be correlated to soil radionuclide activities. Two methods may be used: correlation to a known activity and analysis of a fraction of soil samples taken from core samples. Both methods are described below.

1. Correlation to known activity levels

Department of Energy contractors have access to calibration facilities in Grand Junction, Colorado; Grants, New Mexico; Casper, Wyoming; George West, Texas; Morgantown, West Virginia; Reno, Nevada; and Spokane, Washington. These facilities have fixed-calibration models with several borehole sizes and casing materials placed in cement with mixtures of sand (blank) or spiked with various concentrations of potassium, uranium, and thorium.

Several important factors need to be considered when calibrating at these facilities. A long background count is necessary to determine detector background. The equipment should be calibrated under the same conditions as the actual borehole logging. These conditions include

borehole diameter, casing material, physical parameters in the borehole (the presence or absence of water), and the placement of the detector in the borehole. For additional details concerning this type of calibration, refer to the U.S. Nuclear Regulatory Commission report (NUREG/CR-3429).

2. Direct correlation to soil samples

A split-spoon sampling tube is driven ahead of the auger through the open center of the drill bit according to procedures described in SOP 5.1, Soil and Rock Borehole Logging and Sampling. The soil taken from the split spoon may then be divided into 0.5-ft or 1-ft increments, separately bagged, and analyzed for gamma-emitting radionuclides. A correlation between the resulting analyzed soil activity and the gamma log for that interval may be calculated, and activities of the remaining gamma-logged intervals may be estimated.

It is important to recognize the limitations of this method, particularly in heterogeneous areas. A mathematical deconvolution technique for increasing the accuracy of estimating underground gamma-emitting concentrations is discussed in NUREG/CR-3429.

3.4. Postoperation

3.4.1. Field

A. Ensure that all equipment is accounted for, decontaminated (see SOP 1.6, General Equipment Decontamination), and ready for shipment.

B. Make sure all borehole locations are properly staked and the location ID is readily visible on the location stake.

C. Provide the field team leader with copies of all completed Borehole Log forms. The leader may request that forms be submitted daily, rather than at the end of the operation.

D. Return all logging equipment to the storage area. Be certain the ratemeter/scaler is in the off position.

3.4.2. Documentation

A. Complete logbook entries, verify the accuracy of entries, and sign/initial all pages.

B. Review data collection forms for completeness.

3.4.3. Office

A. Deliver original forms and logbooks to the document control officer (with copies to the site manager and files) for eventual delivery to the Department of Energy.

B. Inventory equipment and supplies. Repair or replace all broken or damaged equipment. Replace expendable items. Return equipment to the equipment manager and report incidents of malfunction or damage.

C. If samples were shipped, contact the analytical laboratory to ensure that samples arrived safely and instructions for sample analyses are understood.

D. Ensure that all radiological sources and standards have been stored in a locked area.

E. Interpretations of gamma logging results are usually completed after computer entry. A deconvolution algorithm may be applied at this time.

4. SOURCES

NRC. 1984. "Borehole Logging for Radium-226: Recommended Procedures and Equipment." U.S. Nuclear Regulatory Commission report NUREG/CR-3429 PNL-5094, RV, October 1984. Richland, Washington.

ORNL. 1982. "Procedures Manual for ORNL Remedial Action Survey and Certification Activities (RASCA) Program." Oak Ridge National Laboratory preliminary draft. Oak Ridge, Tennessee.

SNLA. 1982. "A Counting System for Field Determination of Radium-226 in Soils." Sandia National Laboratories report SAND 82-0287C., Unlimited Release, UCf-20, June 1982. Albuquerque, New Mexico.

TMC. 1982a. "Abbreviated Total-Count Logging Procedures for Use in Remedial Action." Technical Measurement Center report, December 1982. Grand Junction, Colorado.

TMC. 1982b. "Review of Selected DOE Remedial Action Field Measurement Procedures for the Summer of 1982." Technical Measurement Center report, August 1982. Grand Junction, Colorado.

5. APPENDIXES

5.1. Equipment and Supplies Checklist

5.2. Borehole Log Form

5.3. Data Form Completion

APPENDIX 5.1

EQUIPMENT AND SUPPLIES CHECKLIST

_____ Ludlum Model 2220 portable scaler or the equivalent

_____ Ludlum Model 44-10 sodium iodide (NaI) gamma scintillator (or the equivalent) with eye bolt attachment measuring 2 inches x 2 inches

_____ Signal cable of sufficient length to reach depth of augered holes

_____ Plastic bags

_____ Tape

_____ Gamma check source, like Cs-137

_____ Nylon rope to suspend probe

_____ Measuring tape

_____ Indelible marker

_____ Hand-held calculator

APPENDIX 5.2

BOREHOLE LOG FORM

BOREHOLE LOG

PAGE 1 OF ____

FACILITY CODE _____ LOG DATE _____

LOGGER CODE _____ FIELD REP _____

LOCATION ID _____ ACCEPTANCE CODE _____

NORTH COORDINATE (FT) _____ EAST COORDINATE (FT) _____

SCALER:

MODEL NO _____ SERIAL NO _____ CALIBRATION DATE _____

WINDOW ___OUT___ THRESHOLD _____ HIGH VOLTAGE _____ BATTERY _____

NAI PROBE:

MODEL NO _____ SERIAL NO _____ CALIBRATION DATE _____

CHECK SOURCE DATE/TIME _____

COMMENTS _____

DEPTH (FT)	COUNT TOTAL	COUNT TIME	CPM	COMMENTS

ACCEPTANCE CODES: A–ACCEPTABLE R–RECONNAISSANCE U–UNACCEPTABLE N–NOT DETERMINED

COMPLETE BOLDED DATA FOR ENTRY INTO TIMS
BNL-117 (1/88)

FORM COMPLETED BY/DATE _____ TECHNICAL REVIEWER/DATE _____

APPENDIX 5.3

DATA FORM COMPLETION

Use a pen with black ink that is not water soluble (not a felt-tip pen). Make an entry in each blank. Where there is no data entry, enter UNK for Unknown, NA for Not Applicable, or ND for Not Done. If any procedure was not performed as prescribed, give the reason for the change or omission on the form. To change an entry, draw a single line through it, add the correct information above it, and initial the change.

BOREHOLE LOG FORM

1. Facility Code. Five-character code abbreviating the facility name where program activity is being conducted. The first three characters indicate the facility, and the remaining two numbers designate the specific site within the facility.

2. Log Date. The date when the measurements were performed in the format DD-MMM-YY (01-JAN-88).

3. Logger Code. Three-character or four-character code identifying the company responsible for collecting the information recorded on the form.

4. Field Rep. The name of the field representative that recorded the data.

5. Location ID. Four-character code assigned sequentially to each borehole, test pit, or surface location where chemical, biological, radiological, and other measurements are taken.

6. Acceptance code. One-character code assigned by the site manager.

7. North Coordinate (Ft). The north coordinate of the measurement location in feet.

8. East Coordinate (Ft). The east coordinate of the measurement location in feet.

9. Scaler Model No. The model number of the scaler.

10. Scaler Serial No. The serial number of the scaler.

11. Scaler Calibration Date. The date when the scaler was last calibrated. This information should be printed on a sticker attached to the instrument or on a sheet that accompanied the instrument.

12. Window. The window will be in the out position unless otherwise specified.

13. Threshold. The adjustment for the lower energy level of the discriminator. This setting should be determined before using the instrument in the field.

14. High Voltage. The voltage that is applied to the detector. This is detector specific and should be indicated on the calibration sticker.

15. Battery. The battery voltage reading at the beginning of the measurements.

16. NaI Probe Model No. The model number of the sodium iodide (NaI) probe.

17. NaI Probe Serial No. The serial number of the sodium iodide (NaI) probe.

18. NaI Probe Calibration Date. The date when the sodium iodide (NaI) probe was last calibrated.

19. Check Source Date/Time. The date and time the instrument was last checked for response to a source.

20. Comments. Any unusual features or conditions that were noted during the instrument checkout procedure.

21. Depth (Ft). The depth in the backhole at which the counts were logged. The first depth should read surface and is for a measurement taken before drilling the hole. The second should be 0 and is for the surface reading with the hole drilled.

22. Count Total. The number of pulses recorded by the ratemeter/scaler during the counting time.

23. Count Time. The time in minutes (usually 0.1) over which the ratemeter/scaler was recording pulses.

24. CPM. The count rate given in pulses per minute obtained by multiplying the count total by one minute/count time.

25. Comments. Any additional information.

STANDARD OPERATING PROCEDURE 4.6

TEST PIT LOGGING AND SAMPLING

1. PURPOSE

To describe the physical nature of consolidated or unconsolidated subsurface earthen materials encountered during the excavation of a pit or trench.

2. DISCUSSION

The Remedial Investigation Plan (RIP) includes specific details about the location and procedures, equipment, and other details related to the trenching task. Refer to the RIP for the type and number of samples to be collected in each trench. Collection and measurement of samples and the documentation of data will be performed as described in the associated procedures.

Before beginning the field test pit excavation program, office and field management personnel should obtain information about geologic conditions expected at the site. The three basic methods of sampling a test pit are described below.

1. Strip sampling a pit involves the vertical cutting of a representative sample from each distinctive lithologic unit of the test pit wall.

2. Undisturbed block sampling can be performed within a test pit. Normally, the block sample size is approximately 1 ft^3. Microcrystalline wax sealing and proper storage and shipment are essential to avoid drying and breaking block samples.

3. When the test pit is inaccessible or groundwater is infiltrating, the excavation consists of selectively digging in certain lithologic units with a backhoe.

The investigation team should be composed of technical specialists with backgrounds in the fields of geology, engineering geology, or geotechnical engineering. The locations and dimensions of the trench should be identified in the RIP. Mapping the trench walls and sampling should be conducted by the members of the investigation team. The construction subcontractor should be responsible for supplying excavation equipment, trained operators, materials for shoring the trench walls, and the preparation of the walls for mapping.

3. PROCEDURES

3.1. Associated Procedures

Before every operation, a review of the SOPs 1.1-1.10 is necessary. These SOPs contain information on the performance of field activities. They should be consulted for specific information on equipment and supplies; sample collection, preservation, packaging, and shipping; decontamination procedures; and documentation requirements. Procedures directly associated with this SOP are listed below.

SOP No.	SOP Title
1.1	General Instructions for Field Personnel
1.3	Sample Control and Documentation
1.4	Sample Containers and Preservation
1.5	Guide to Handling, Packaging, and Shipping of Samples
1.6	General Equipment Decontamination
5.2	Soil Sampling with a Spade and Scoop

3.2. Preparation

3.2.1. Office

A. Review the RIP and SOPs listed in Section 3.1.

B. Coordinate schedules/actions with the installation staff.

C. Obtain appropriate permission for property access.

D. Assemble the equipment and supplies listed in Appendix 5.1. Ensure the proper operation of all sampling equipment.

E. Notify the analytical laboratory of sample types, the number of samples, and the approximate arrival date.

F. Contact the carrier that will transport samples to obtain information on regulations and specifications.

3.2.2. Documentation

A. Obtain a logbook from the QA officer.

B. Record results of the equipment check in the logbook.

C. Obtain a sufficient number of the appropriate ER Program data collection forms (see INDEX TO SOPs).

D. Consult the ER Program data administrator for a current list of information management codes, location IDs, and sample numbers used in the completion of data forms.

3.2.3. Field

Decontaminate all sampling equipment before taking the first sample and between sampling intervals.

3.3. Operation

A. Excavate trenches with a backhoe that uses a 2- to 3-ft-wide bucket capable of efficient excavation to a depth of approximately 15 ft.

B. At those sites requiring restoration or containing contaminated materials, remove and stockpile the topsoil or contaminated material before trench excavation. Make shallow cuts of 1- to 2-ft depths and stockpile the material on the downwind or downslope side of the trench. Maintain ample space (a minimum of 2 ft) between the stockpiled material and the trench to maneuver excavation equipment.

C. Maintenance of stable walls, particularly in deep trenches, is best accomplished with straight-line sections. Because shoring in corners or curve areas is potentially ineffective, avoid the excavation of nonlinear trenches.

D. Make trench walls vertical, uniform in width, and as smooth as practical to facilitate the efficient use of portable shoring braces. If caving of the trench walls occurs during excavation, widen the trench and terrace it at the top to allow placement of the shoring in the lower section of the trench. Mitigate severe caving of the trench walls by using multiple terraces that incrementally increase the trench width toward the ground surface. Instances may occur in which the only way to examine vertical walls in problem areas is to map the walls in small increments of depths and lengths, stopping the trenching as required and using the backhoe bucket as safety equipment. After each trench section is adequately excavated, the backhoe operator should scrape the trench bottom to remove loose debris and obstructions. Trench investigators should be allowed unrestricted movement to the degree practically achievable, particularly with respect to ladder access.

F. Place excavated subsoil as a windbreak on the upwind or upgradient side of the trench. Maintain sufficient space (a minimum of 2 ft) between the material and the trench edge to ensure that it will not fall back into the trench or impede the advancement of the backhoe.

G. Depending on the strength of the surficial deposits being trenched, mapping may occur concurrently with the advancement of the trench. The site geologist and an assistant should conduct the mapping of the trench wall at a safe distance behind the backhoe, lessening the risk of exposure to caving induced by backhoe vibrations. One team member should remain at the surface to direct the excavation activity and assist the trench wall mapping team. The topside member can ensure that the backhoe operator excavates the trench as specified by the site geologist, who should advise the operator of trench conditions requiring immediate attention and direct the operator to trim and terrace trench walls when appropriate. The safety of the trench mappers is the paramount responsibility of the topside team member, who should be constantly alert for indications of potential wall caving (like tension cracks). All persons entering any portion of the trench should wear personal equipment for protection of the head and eyes.

H. For trenches in excess of 5 ft deep or shallower trenches that have been examined and require structural reinforcement, the most efficient way to strengthen a trench wall is with hydraulically operated portable shoring. Shore up only the section of trench being mapped. As safety is the primary

consideration, the placement of shoring relative to the mapping activity in the trench is of critical importance. No person may enter any portion of the trench that has not been shored. Alternately, a specially constructed trench box can be used to shore the walls to facilitate sampling.

I. Project managers should document the required safety protocol related to Occupational Safety and Health Administration (OSHA) requirements according to the OSHA publication 2226 (Excavating and Trenching Operations, U.S. Department of Labor) and 29 CFR 1926, Construction and Industry Standards. Trenches deeper than 5 ft and longer than 8 ft must be shored. For trenches approximately 10 ft deep or less, use a group of at least 3 portable shoring braces. Space them roughly 8 ft apart to provide the field personnel at the site with a working space. For depths greater than 10 ft, use at least 4 shoring braces. When 2 or more people will be in the trench, use additional shoring to expand the working space. The shoring braces should not be separated by more than 8 ft. Shoring should be placed in true horizontal position, spaced vertically, and secured to prevent sliding, falling, or kickouts.

J. Provide access to the trench with ladder(s) placed next to the shoring. The ladder(s) should be aluminum and capable of extending from the trench bottom to at least 3 ft above the ground surface. Provide a ladder for each person working in the trench.

K. The topside team member should install shoring by placing a 2-inch by 2-inch board across the width of the trench for support. The topside person should relocate the portable shoring and ladder(s) as mapping operations advance (or as warranted by unstable trench wall conditions).

L. Inclement weather accompanied by intense or steady precipitation is sufficient cause to temporarily suspend fault-trenching operations. Careful examination of the trench wall, bottom, and vicinity conditions should precede the resumption of the trenching operations.

M. When appropriate, restrict access to the trench area(s). Use barricades with flashing lights to preclude vehicle and pedestrian traffic and delineate a perimeter that contains the trench, windbreak, and topsoil/contaminated material stockpiles. If the trench area is accessible to livestock, install a single-wire electric fence or other type of temporary fencing to prevent entry into the site area.

N. Each trench or trench segment is usually maintained in an accessible condition until all trenches have been mapped and data collected to the satisfaction of the site geologist. No portion of any trench should be reentered unless that segment has been inspected for stability and adequately reinforced with portable shoring.

O. Plot physical attributes of units that are distinct because of lithology, texture, or color as feet and inches, plus or minus the baseline elevation and station position. In addition to bedding planes and lithologic interfaces, geologic features (like cobble strings) may aid in following stratum continuity, particularly if individual units are difficult to discern. Assessment of stratigraphy in a deposit lacking distinct strata or containing similar geologic units may be aided by the use of a 5-ft-square aluminum frame marked with string in a 1-ft grid pattern. To demonstrate the continuity of surficial

deposits, detailing the geologic features (like cobble strings or lenses) with the grid frame across the entire length of the trench may be necessary. Other features like gouge or breccia zones, zones of alteration, and fracture systems should be mapped, as well as distinct reference features like large boulders or organic debris.

P. Visual Description. Description of the soil will be according to the ASTM Designation D 2488-84, Standard Recommended Practice for Description of Soils (Visual-Manual Procedure).

Q. The technical specialist assisting the mapper in the trench should prepare the trench wall ahead of the mapper using a trowel and large paint brushes. Physical support of the grid frame when mapping the middle and upper reaches of a trench wall will be the responsibility of this person.

R. When there appears to be evidence of structural deformation or where there is doubt of the lateral continuity of a deposit or stratum, take at least two photographs of the trench wall. The first should record the unaltered appearance of the wall. The second should record the same location after it has been divided into a grid reference using nails and string line and highlighted with orange, white, or black spray paint. Take flash photos if ambient light is insufficient for a clear, bright exposure.

S. In the event that faulting is indicated by a bedding disturbance, attempt to date the youngest offset bed or the oldest bed that is not offset by acceptable dating methods. After delineating the trend of the fault trace, confirm the orientation of the fault by excavating a second trench across the same fault.

T. Collect samples from the trench wall or floor according to SOP 5.2, Soil Sampling with a Spade and Scoop.

NOTE: Whenever a sample is collected, a custody record must be initiated on the Custody Transfer Record/Lab Work Request form and a Soil Sample Identification Label affixed to the sample container. SOP 1.3, Sample Control and Documentation, contains copies of the form and label and instructions for completing the form and label.

U. Backfill the trenches with the backhoe used to perform the excavation. Alternatively, a rubber tire front-end loader or backhoe with a front-end loader bucket may be more efficient. Use material excavated and functioning as a windbreak for backfill. It is important at most sites that the restored site is as close to the original surface contour as practical. Compact the backfill by wheel rolling with the backhoe or loader to accomplish this objective.

V. In pasture land or any place where restoration is required and vegetation cover is important, replace the topsoil that was excavated and stockpiled downgradient from the trench at the end of the restoration process. After the surface is wheel rolled and dressed down, restore the area as specified by the access agreement.

3.4. Postoperation

3.4.1. Field

A. Fill the test pit to its original level.

B. Ensure that all equipment is accounted for, decontaminated (see SOP 1.6, General Equipment Decontamination), and ready for shipment.

C. Restore the site to presampling conditions as specified in the RIP.

D. Make sure the test pits are properly staked and the location ID is readily visible on the location stake.

E. Prepare samples for transport according to SOP 1.3, Sample Control and Documentation; SOP 1.4, Sample Containers and Preservation; and SOP 1.5, Guide to Handling, Packaging, and Shipping of Samples.

3.4.2. Documentation

A. Record cleanup procedures and any uncompleted work (like site restoration or long-term monitoring) in the logbook.

B. Complete logbook entries, verify the accuracy of entries, and sign/initial all pages.

C. Review data collection forms for completeness.

3.4.3. Office

A. Deliver original forms and logbooks to the site manager for technical review. He/she will review, sign forms, and transmit to the document control officer (copies to the files) for eventual delivery to the Department of Energy.

B. Inventory equipment and supplies. Repair or replace all broken or damaged equipment. Replace expendable items. Return equipment to the equipment manager and report incidents of malfunction or damage.

C. Contact the analytical laboratory to ensure that samples arrived safely and instructions for sample analyses are clearly understood.

4. SOURCE

ASTM. 1986. Standard Recommended Practice for Description of Soils (Visual-Manual Procedure)," 411-25, ASTM D:2488-84. American Society of Testing Methods, Philadelphia, Pennsylvania.

5. APPENDIXES

5.1. Equipment and Supplies Checklist

5.2. Test Pit Log Form

5.3. Data Form Completion

5.4. Checklist to Describe Fine-Grained Soils

5.5. Checklist to Describe Coarse-Grained Soils

APPENDIX 5.1

EQUIPMENT AND SUPPLIES CHECKLIST

_____ Flat-nosed shovel and scoops

_____ Sample containers and preservatives

_____ Hand lens

_____ Ladders

_____ Portable shoring braces (minimum of 3)

_____ Spray paint

_____ Trowel

_____ Large paint brushes

_____ Barricades or temporary fencing

_____ Camera and flash attachment

APPENDIX 5.2

TEST PIT LOG

TEST PIT LOG

PAGE 1 OF ____

FACILITY CODE ____ **EXCAVATOR CODE** ____

LOCATION ID ____ **EXCAVATION DATE** ____

COORDINATES (FT): **DEPTH (FTFD)** ____

NORTH ____ **EAST** ____ CONSTRUCTION METHOD ____

GROUND ELEVATION (FT MSL) ____ **ACCEPTANCE CODE** ____

LOCATION TYPE TP

GROUNDWATER LEVELS		
DATE	TIME	DEPTH (FT)

LOCATION DESCRIPTION

LITHOLOGIC LOG

LOGGER CODE ____

DEPTH (FT)	SAMPLE INTERVAL	SAMPLE METHOD	SAMPLE ID	USCS	VISUAL DESCRIPTION

ACCEPTANCE CODES: A–ACCEPTABLE R–RECONNAISSANCE U–UNACCEPTABLE N–NOT DETERMINED

CONSTRUCTION METHODS:

D – DUG
O – OTHER (SPECIFY)
T – TRENCHING

SAMPLE METHODS:

B – UNDISTURBED BLOCK
D – DISTURBED BULK

COMPLETE BOLDED DATA FOR ENTRY INTO TMS
TPO–004 (3/88)

FORM COMPLETED BY/DATE ____ TECHNICAL REVIEWER/DATE ____

TEST PIT LOG

PAGE ____ OF ____

FACILITY CODE ______________________________

LOCATION ID ______________________________ **COMPLETION DATE** ____________

LITHOLOGIC LOG

DEPTH (FT)	**SAMPLE INTERVAL**	**SAMPLE METHOD**	**SAMPLE ID**	**USCS**	**VISUAL DESCRIPTION**

COMPLETE BOLDED DATA FOR ENTRY INTO TMS
TPD-004 (3/88)

______________________ FORM COMPLETED BY/DATE

______________________ TECHNICAL REVIEWER/DATE

APPENDIX 5.3

DATA FORM COMPLETION INSTRUCTIONS

Use a pen with black ink that is not water soluble (not a felt-tip pen). Make an entry in each blank. Where there is no data entry, enter UNK for Unknown, NA for Not Applicable, or ND for Not Done. If any procedure was not performed as prescribed, give the reason for the change or omission on the form. To change an entry, draw a single line through it, add the correct information above it, and initial the change.

TEST PIT LOG

1. Facility Code. Five-character code abbreviating the facility name where program activity is being conducted. The first three characters indicate the facility, and the remaining two numbers designate the specific site within the facility.

2. Location ID. Four-character code assigned sequentially to each test pit location where physical, chemical, biological, radiological, and other measurements are taken.

3. Coordinates (Ft): North/East. The coordinates refer to the horizontal location of the test pit. At the time of the field investigation, the exact coordinate position of the borehole will not be known. In this case, UNK must be within the two spaces on the form. This information will be provided when the survey data comes in after the test pit program has been completed.

4. Ground Elevation (Ft MSL). At the time of the field investigation, the exact ground elevation of the test pit will not be known. In this case, the exact ground elevation will be determined when the survey data comes in after the program has been completed.

5. Location Type. This line is for data processing personnel only, and no additional information needs to be given on this line.

6. Excavator Code. Three-character code identifying the company responsible for excavating a test pit.

7. Excavation Date. The date when the test pit was excavated in the format DD-MMM-YY (01-JAN-88).

8. Depth (FTFD). The total depth of the test pit in feet and tenths of feet.

9. Construction Method. The construction or excavation method used in the advancement of the test pit. A table of various construction methods is included at the bottom of each Test Pit Log form.

10. Acceptance Code. One-character code assigned by the installation manager.

11. Groundwater Levels. The date, time, and depth (in feet) of any water encountered during the excavation of a test pit should be recorded by the distance from the ground surface to the location where it is seeping from the sides of the excavated trench.

12. Location Description. A written description of the approximate test pit location in respect to some nearby permanent topographic or geographic location.

13. Logger Code. Three-character code identifying the company that employs the person filling out the Test Pit Log form.

14. Lithologic Log

    a. Depth (Ft). A numerical designation that generally depicts lithologic soil boundaries. Each space is usually designated as equal to 1.0 ft of depth below the ground surface. Depths will be recorded on the Test Pit Log in feet and tenths of feet.

CONVERSION TABLE

(INCHES TO TENTHS OF FEET)

Inches	Tenths of Feet
1	.08
2	.17
3	.25
4	.33
5	.42
6	.50
7	.58
8	.67
9	.75
10	.83
11	.92
12	1.00

    b. Sample Interval. A graphical representation depicting the interval from which the sample was collected.

    c. Sample Method. The method by which the samples will be obtained. A list of test pit sampling methods is included at the bottom of each Test Pit Log form.

    d. Sample ID. Four-digit number assigned to ensure that data collected retains uniqueness from other data collected at the same location ID.

e. USCS (The Unified Soil Classification System). A method of grouping unconsolidated earth materials according to their engineering properties. It is based on soil behavior, which is a reflection of the physical properties of the soil and its constituents. The system established 15 distinct soil groups with different engineering properties. Boundary classifications are provided for soils having characteristics of 2 groups. The 15 soil groups are divided into the categories of fine-grained and coarse-grained materials and are described in Appendixes 5.4 and 5.5, respectively.

f. Visual Description. The visual description of material being excavated.

APPENDIX 5.4

CHECKLIST TO DESCRIBE FINE-GRAINED SOILS

1. Typical Name
   Sandy Silt, Silt, Clayey Silt, Sandy Clay, Silty Clay, Clay, Organic Silt, and Organic Clay

2. Size Distribution
   Approximate percent of gravel, sand, and fines in fractions finer than 3 inches

3. Color
   Note presence of mottling and banding, as well as color of the soil.

4. Moisture Content
   Dry, Moist, Wet, and Saturated

5. Consistency
   Soft, Firm (medium), Stiff, Very Stiff, or Hard

6. Structure
   Stratified, Laminated (Varved), Fissured, Blocky, Lensed, and Homogeneous (nonstratified)

7. Cementation
   Weak or Strong

8. Local or Geologic Name

9. Group Symbol

<u>Soil Classification</u>

Group Symbol	Group Name
CL	Lean clay (low plasticity)
ML	Silt
OL	Organic clay or silt (lean)
CH	Fat clay (high plasticity)
MH	Elastic silt
OH	Organic clay or silt (Fat)
PT	Peat

APPENDIX 5.5

CHECKLIST TO DESCRIBE COARSE-GRAINED SOILS

1. Typical Name
   Sand, Clayey Sand, Silty Sand, Gravel, Clayey Gravel, Silty Gravel, Cobbles, and Boulders

2. Gradation
   Well Graded (uniformly graded) or Poorly Graded (gap graded)

3. Size Distribution.
   Approximate percent of gravel, sand, and fines in fractions finer than 3 inches

4. Grain Shape
   Angular, Subangular, Subrounded, and Rounded

5. Color

6. Moisture Content
   Dry, Moist, Wet, and Saturated

7. Structure
   Stratified, Lensed, and Nonstratified

8. Cementation
   Weak and Strong

9. Local or Geologic Name

10. Group Symbol

<u>Soil Classification</u>

Group Symbol	Group Name
GW	Well-graded gravel
GP	Poorly graded gravel
GM	Silty gravel
GC	Clayey gravel
SW	Well-graded gravel
SP	Poorly graded gravel
SM	Silty sand
SC	Clayey sand

STANDARD OPERATING PROCEDURE 5.1

SOIL AND ROCK BOREHOLE LOGGING AND SAMPLING

1. PURPOSE

To describe the physical nature of consolidated or unconsolidated subsurface earthen materials encountered during auger, rotary, or other drilling activities and collect samples of the earthen materials for further evaluation.

2. DISCUSSION

The Remedial Investigation Plan (RIP) contains specific details about the procedures and equipment for this SOP. Refer to the RIP for the type of samples to be collected. Collection and measurement of samples and the documentation of data will be performed as described in the associated procedures.

Before field drilling begins, all management personnel should obtain information about expected geologic and hydrogeologic conditions at the site. The RIP includes directions for sampling methods, location, and details for the site where the field personnel will work.

Most sites where soil and rock borehole logging and sampling are conducted include unconsolidated deposits of varying thickness over consolidated bedrock at depth. Two forms are used for describing the soil and rock encountered during drilling and sampling. The Borehole Log (Soil) form (Appendix 5.2) is used when describing unconsolidated alluvium, colluvium, and regolith. The Borehole Log (Rock) form (Appendix 5.3) is used when drilling or coring rock to describe the lithology and other physical characteristics of sedimentary, igneous, and metamorphic rocks.

3. PROCEDURES

3.1. Associated Procedures

Before every operation, a review of the SOPs 1.1-1.10 is necessary. These SOPs contain information on the performance of field activities. They should be consulted for specific information on equipment and supplies; sample collection, preservation, packaging, and shipping; decontamination procedures; and documentation requirements. Procedures directly associated with this SOP are listed below.

SOP No.	SOP Title
1.1	General Instructions for Field Personnel
1.3	Sample Control and Documentation
1.4	Sample Containers and Preservation
1.5	Guide to Handling, Packaging, and Shipping of Samples

SOP No.	SOP Title
1.6	General Equipment Decontamination
4.1	Soil Boring
4.2	Rock Boring

3.2. Preparation

3.2.1. Office

A. Review the RIP and SOPs listed in Section 3.1.

B. Coordinate schedules/actions with the installation staff.

C. Obtain appropriate permission for property access.

D. Assemble the equipment and supplies listed in Appendix 5.1. Ensure the proper operation of all sampling equipment.

E. Notify the analytical laboratory of sample types, the number of samples, and the approximate arrival date.

F. Contact the carrier that will transport samples to obtain information on regulations and specifications.

G. Contact the members of the survey crew and inform them of the approximate date that ground surveys will begin.

3.2.2. Documentation

A. Obtain a logbook from the QA officer.

B. Record results of the equipment check in the logbook.

C. Obtain a sufficient number of appropriate ER Program data collection forms (see INDEX TO SOPs).

D. Consult the ER Program data administrator for a current list of information management codes, location IDs, and sample numbers used in the completion of data forms.

3.2.3. Field

A. Decontaminate all sampling equipment before taking the first sample and between sampling intervals (see SOP 1.6, General Equipment Decontamination, and the RIP).

B. Record all pertinent information (date, site, ID number, and location) in the logbook or the appropriate data form. Note field conditions, unusual circumstances, and weather conditions.

C. Permanently attach a soil sample identification label to each sample container.

3.3. Operation

3.3.1. Logging Samples

A. Whenever a sample is collected, complete a description of the sample using the Borehole Log (Soil) form (Appendix 5.2) or Borehole Log (Rock) form (Appendix 5.3). Fill out these forms according to the information described in Appendix 5.4. Include all scale drawings that further describe textural variations in the logbook. If cameras are permitted on the site, use photographs instead of drawings.

NOTE: Whenever a sample is collected, a custody record must be initiated on the Custody Transfer Record/Lab Work Request form and a Soil Sample Identification Label affixed to the sample container. SOP 1.3, Sample Control and Documentation, contains copies of the form and label and instructions for completing the form and label.

B. Gross physical properties of the sample can be described by unaided visual observation or inspection under a hand lens. Whenever feasible, prepare sample descriptions by observing fresh surfaces or cuttings.

C. Wash cuttings from mud rotary boring in clear water to remove drilling mud. Use a strainer with a large capacity during the washing process.

D. Split the core lengthwise, so that the interior can be inspected. Place core in cardboard box after inspection. Label top, bottom, and core interval on box. The core box will be lined with plastic to minimize cross-contamination. Mark unrecovered core intervals with blocks of wood. Use two permanent markers of different colors to draw parallel lines on the core so that its proper position in the core box can be maintained during and after future inspections.

E. Record all linear measurements in feet or tenths of feet, not inches.

F. Blow counts are to be counted for each 0.5-ft penetration of the Standard Penetration Test.

G. Use the standard Unified Soil Classification System (USCS) designations for identifying soil strata. Detailed descriptions of the different soil classifications are included in the U.S. Corps of Engineers Technical Memorandum, 1953.

H. Visual descriptions will be according to ASTM Designation D 2488-69 "Standard Recommended Practice for Description of Soils (Visual-Manual Procedure)."

I. Percent core recovery is a measure of coring efficiency and rock quality. If coring progresses gradually, a hard sandstone to a strongly fissile shale, the percent recovery will be affected. Once the core is shown to the field representative (preferably while still in the core barrel if it is a split-core barrel), measure the total length recovered. Sometimes it is possible to determine where core loss occurred in the run. The following clues are sometimes present: plugging off during drilling, intense fracturing in certain sections of

core (possibly correlated with rough, high vibrations during drilling), and rolled and recut pieces of core.

J. The rock quality designation (RQD) is based on a modified core recovery procedure and indirectly on the number of fractures and the amount of softening or alteration in the rock mass. Obtain the measure by summing up the total length of core recovered and counting only those relatively hard, sound pieces of core that are four inches in length or longer. See Stags and Zienkiewitz, 1968 for an example of an RQD computation. It is necessary to distinguish between natural fractures and those caused by drilling or recovery operations. Depending on the engineering or hydrogeologic requirements of the project, breaks induced along high anisotropic planes (like foliation or bedding) may be counted as natural fractures. Lengths that contain strong and recemented fractures should be measured in total.

RQD	QUALITY OF ROCK MASS
90-100	Excellent
75-90	Good
50-75	Fair
25-50	Poor
0-25	Very Poor

K. Percent Drilling Fluid Recovery--the volume of fluid losses and the interval over which they occur. For example, no fluid loss means that no fluid was lost except through spillage and filling the hole. Partial fluid loss means that a return was achieved, but the amount of return was significantly less than the amount being pumped. Complete water loss means that no fluid returned to the surface during the pumping operation. A combination of opinions from the field personnel and the driller on this matter will result in the best estimate. Make a crude, relatively effective estimate by placing a calibrated stick in the recirculation pit. Estimate the return flow and volume of the pit at intervals of one-half ft to one ft on the stick. Obtain the pumping rate by measuring elapsed time to withdraw a specified volume from the pit without return. After estimating the return flow, a percentage can be obtained. The return flow can sometimes be crudely measured with a five-gallon bucket.

Record a change in the fluid recovery rates. If the recovery is essentially the same for an entire core run, only one call per change is necessary. Record the change in fluid recovery rate to the nearest 10%.

L. Spacing. Describe the spacing of discontinuities as close or wide according to the following tables.

SPACING	FOLIATION, BANDING, OR BEDDING	SYMBOL
(1) More than 6 ft	Very thickly (bedded or banded)	VT
(2) 2 to 6 ft	Thickly	T

(3) 8 to 24 inches	Medium	M
(4) 2 1/2 to 8 inches	Thinly	TN
(5) 3/4 to 2 1/2 inches	Very thinly	VTN

In describing structural features, describe the rock mass as thickly bedded or thinly bedded according to the above criteria. Depending on the project requirements, identify the form of joint (stepped, smooth, undulating, or planar), its dip (in degrees), its surface (rough, smooth, or slickensided), its opening (giving width), and its filling (none, sand, clay, or breccia).

M. Orientation. The orientation is the angle of bedding, joints, or fractures measured with a clear plastic protractor to the nearest 10°. Reference all measurements with 0° at horizontal. If fractures have a persistent orientation, record at the beginning and repeat every 5 ft in depth.

N. Condition. The texture of the fractures. Examples of condition are smooth, clean, rough, and stained.

O. Weathering. Describe the degree of weathering according to the following table.

GRADE	SYMBOL	DIAGNOSTIC FEATURES
Fresh	F	No visible sign of decomposition or discoloration. Rings under hammer impact present.
Slightly	SLW	Slight discoloration inward from open fractures; otherwise, similar to fresh.
Moderately Weathered	MW	Discoloration throughout. Weaker minerals (like feldspar) have decomposed. Strength somewhat less than fresh rock, but cores cannot be broken by hand or scraped by knife. Texture has been preserved.
Highly Weathered	HW	Most minerals are somewhat decomposed. Specimens can be broken by hand with effort or shaved with a knife. Core stones present in rock mass. Texture becoming indistinct, but fabric has been preserved.
Completely	CW	Minerals decomposed to soil, but fabric and structure have been preserved (saprolite). Easily crumbled or penetrated. Advanced state of decomposition resulting in plastic soils. Rock fabric and structure completely destroyed. Large volume change.

CAUTION: Soft rock is not necessarily weathered. Look for alteration minerals that indicate true weathering has occurred.

P. Hardness. Describes the degree of hardness according to the following table.

CLASS	HARDNESS	SYMBOL	FIELD TEST
I	Extremely hard	EH	Many blows with geologic hammer required to break intact specimen.
II	Very hard	VH	Hand-held specimen breaks with hammer end of pick under more than one blow.
III	Hard	H	Cannot be scraped or peeled with knife; hand-held specimen can be broken with single moderate blow with pick.
IV	Soft	SO	Can just be scraped or peeled with knife. Indentations 1 mm to 3 mm show in specimen with moderate blow with pick.
V	Very soft	VSO	Material crumbles under moderate blow with sharp end of pick and can be peeled with a knife, but specimen is too hard to hand trim to a size usable in a triaxial test apparatus.

Q. Lithologic. The type of strata encountered during various subsurface exploratory investigations. The geologic lithology codes that are to be used are listed in Appendix 5.7.

R. Visual Description. Other petrologic descriptors that aid in the classification of the rock or soil. Information that should be included is listed below.

1. Typical Name
   Sandstone, schist, granite, or any of the appropriate names/descriptions included in Appendix 5.6

2. Grain Size
   Fine, medium, or coarse

3. Structure
   Stratified, laminated (varved), fissured, slickensided, blocky, lensed, or homogeneous (nonstratified)

4. Color
   Use A.S.A. rock color chart for rocks; use Mansell color chart for soils. This should include grey colors for reduced soils.

5. Cementation
   Weak or strong

6. Local or Geologic Name

7. Group Symbol from Appendix 5.5 or 5.6

S. Place samples for analyses in appropriate containers (see SOP 1.5, Guide to Handling, Packaging, and Shipping of Samples). Designate sample intervals removed from core by wooden blocks that have been properly labeled according to the interval sampled.

3.4. Postoperation

3.4.1. Field

A. Ensure that all equipment is accounted for, decontaminated (see SOP 1.6, General Equipment Decontamination), and ready for shipment.

B. Restore the site to presampling conditions and plug open sampling holes, as specified in the RIP.

C. Make sure all borehole locations are properly staked and the location ID is readily visible on the location stake.

D. Prepare samples and transport according to SOP 1.3, Sample control and Documentation; SOP 1.4, Sample Containers and Preservation; and SOP 1.5, Guide to Handling, Packaging, and Shipping of Samples.

3.4.2. Documentation

A. Record cleanup and hole abandonment procedures and any uncompleted work (like site restoration or long-term monitoring) in the logbook.

B. Complete logbook entries, verify the accuracy of entries, and sign/initial all pages.

C. Review data collection forms for completeness.

3.4.3. Office

A. Deliver original forms and logbooks to the site manager for technical review. He/she will review, sign forms, and transmit to the document control officer (copies to the files) for eventual delivery to the Department of Energy.

B. Inventory equipment and supplies. Repair or replace all broken or damaged equipment. Replace expendable items. Return equipment to the equipment manager and report incidents of malfunction or damage.

C. Contact the analytical laboratory to ensure that samples arrived safely and instructions for sample analyses are understood.

4. SOURCES

ASTM. 1986. "Standard Method for Penetration Test and Split-Barrel Sampling of Soils," 298-303, ASTM D: 1586-84. American Society of Testing Methods, Philadelphia, Pennsylvania.

ASTM. 1986. "Standard Practice for Thin-Walled Tube Sampling of Soils," 304-307, ASTM D: 1587-83. American Society of Testing Methods, Philadelphia, Pennsylvania.

ASTM. 1986. "Standard Practice for Diamond Core Drilling For Site Investigation," 333-337, ASTM D: 2113-83. American Society of Testing Methods, Philadelphia, Pennsylvania.

ASTM. 1986. "Standard Test Method for Classification Of Soils For Engineering Purposes," 397-410, ASTM D: 2487-85. American Society of Testing Methods, Philadelphia, Pennsylvania.

ASTM. 1986. "Standard Recommended Practice for Description of Soils (Visual-Manual Procedure)," 411-25, ASTM D:2488-84. American Society of Testing Methods, Philadelphia, Pennsylvania.

ASTM. 1986. "Standard Practice for Ring-Lined Barrel Sampling of Soils," 560-563, ASTM D: 3550-84. American Society of Testing Methods, Philadelphia, Pennsylvania.

U.S. Corps of Engineers. 1953. "The Unified Soil Classification System." Technical Memorandum No. 3-357. Washington, D.C.: U.S. Government Printing Office.

5. APPENDIXES

5.1. Equipment and Supplies Checklist

5.2. Borehole Log (Soil) Form

5.3. Borehole Log (Rock) Form

5.4. Data Form Completion

5.5. Checklist for Description of Fine-Grained Soils

5.6. Checklist for Description of Coarse-Grained Soils

5.7. Geologic Lithology Codes

APPENDIX 5.1

EQUIPMENT AND SUPPLIES CHECKLIST

_____ Plastic sheet

_____ Hand lens

_____ Tape measure (divided by feet and tenths of feet)

_____ Wooden blocks (for core)

_____ Core boxes

_____ Grain-size chart

_____ Color chart

_____ Dilute HCl

_____ Red and blue permanent markers

_____ Strainer

_____ Sample labels

APPENDIX 5.2

BOREHOLE LOG (SOIL) FORM

BOREHOLE LOG (SOIL)

PAGE 1 OF ____

FACILITY CODE _____ DRILLER CODE _____
LOCATION ID _____ COMPLETION DATE _____
COORDINATES (FT): DIAMETER (IN) _____
NORTH _____ EAST _____ DEPTH (FTFD) _____
GROUND ELEVATION (FT MSL) _____ CONSTRUCTION METHOD _____
LOCATION TYPE BH _____ ACCEPTANCE CODE _____
COMMENTS _____

GROUNDWATER LEVELS		
DATE	TIME	DEPTH (FT)

LOCATION DESCRIPTION

LITHOLOGIC LOG

LOGGER CODE _____

DEPTH (FT)	SAMPLE INTERVAL	SAMPLE RECOVERY	SAMPLE RETAINED	SAMPLE METHOD	SAMPLE ID	BLOW COUNT (PER 6 IN)	N VALUE	USCS	VISUAL DESCRIPTION

ACCEPTANCE CODES: A–ACCEPTABLE R–RECONNAISSANCE U–UNACCEPTABLE N–NOT DETERMINED

CONSTRUCTION METHODS:

A – AIR ROTARY
B – BORED OR AUGERED
C – CABLE-TOOL
D – DUG
H – HYDRAULIC-ROTARY
J – JETTED
P – AIR-PERCUSSION
R – REVERSE ROTARY
T – TRENCHING
V – DRIVEN
W – DRIVE AND WASH
Z – OTHER (SPECIFY)

SAMPLE METHODS:

A – AUGER CUTTINGS
S – 2" O.D. 1.38" I.D. DRIVE SAMPLE
U – 3" O.D. 2.42" I.D. TUBE SAMPLE
T – 3" O.D. THIN-WALLED SHELBY TUBE
O – OTHER (SPECIFY)

COMPLETE BOLDED DATA FOR ENTRY INTO TIMS
BHD-002 (3/88)

FORM COMPLETED BY/DATE _____ TECHNICAL REVIEWER/DATE _____

BOREHOLE LOG (SOIL)

PAGE ____ OF ____

FACILITY CODE _____

LOCATION ID _____ COMPLETION DATE _____

LITHOLOGIC LOG

DEPTH (FT)	SAMPLE INTERVAL	SAMPLE RECOVERY	SAMPLE RETAINED	SAMPLE METHOD	SAMPLE ID	BLOW COUNT (PER 6 IN)	N VALUE	USCS	VISUAL DESCRIPTION

COMPLETE BOLDED DATA FOR ENTRY INTO TMS

SHD-002 (3/86)

FORM COMPLETED BY/DATE _____

TECHNICAL REVIEWER/DATE _____

APPENDIX 5.3

BOREHOLE LOG (ROCK) FORM

BOREHOLE LOG (ROCK)

PAGE 1 OF ____

FACILITY CODE _____ DRILLER CODE _____
LOCATION ID _____ COMPLETION DATE _____
COORDINATES (FT): DIAMETER (IN) _____
NORTH _____ EAST _____ DEPTH (FTFD) _____
GROUND ELEVATION (FT MSL) _____ CONSTRUCTION METHOD _____
LOCATION TYPE BH _____ ACCEPTANCE CODE _____

GROUNDWATER LEVELS

DATE	TIME	DEPTH (FT)

LOCATION DESCRIPTION

_____
_____
_____
_____
_____

LITHOLOGIC LOG

LOGGER CODE _____

DEPTH (FT)	PACKER TEST INTERVAL	DRILLING METHOD	SAMPLE ID	% CORE RECOVERY	% ROCK QUALITY DESIGNATION (RQD)	% DRILLING FLUID RECOVERY	SPACING	ORIENTATION	CONDITION	WEATHERING	HARDNESS	LITHOLOGIC	VISUAL DESCRIPTION

ACCEPTANCE CODES: A–ACCEPTABLE R–RECONNAISSANCE U–UNACCEPTABLE N–NOT DETERMINED

CONSTRUCTION METHODS:

A – AIR ROTARY
B – BORED OR AUGERED
C – CABLE-TOOL
D – DUG
H – HYDRAULIC-ROTARY
J – JETTED
P – AIR-PERCUSSION
R – REVERSE ROTARY
T – TRENCHING
V – DRIVEN
W – DRIVE AND WASH
O – OTHER (SPECIFY)

DRILLING METHODS:

H – 8 1/2" HOLLOW STEM AUGER
C – 4 1/2" CONTINUOUS FLIGHT AUGER
GB – GEAR BIT
NX – NX ROCK CORING
NQ – NQ WIRELINE ROCK CORING

SPACING:

BEDDED, FOLIATION, ETC:
VT – VERY THICKLY
T – THICKLY
M – MEDIUM
TN – THINLY
VTN – VERY THINLY

JOINTS/FAULTS:
VW – VERY WIDELY
W – WIDELY
M – MEDIUM
C – CLOSELY
VC – VERY CLOSELY

CONDITION:

NO – NODULAR
MT – MOTTLED
V V – VARVED
BN – BANDED
ST – STINGERS
SM – SMOOTH
CL – CLEAN
RH – ROUGH
SL – SLIGHT

WEATHERING:

F – FRESH
SL – SLIGHTLY WEATHERED
MW – MODERATLY WEATHERED
HW – HIGHLY WEATHERED
CW – COMPLETELY WEATHERED
RS – RESIDUAL SOIL

HARDNESS:

EH – EXTREMELY HARD
VH – VERY HARD
H – HARD
S – SOFT
VS – VERY SOFT

COMPLETE BOLDED DATA FOR ENTRY INTO TIMS
BHO–003 (3/88)

_____ FORM COMPLETED BY/DATE _____ TECHNICAL REVIEWER/DATE

BOREHOLE LOG (ROCK)

PAGE ____ OF ____

FACILITY CODE _____

LOCATION ID _____ COMPLETION DATE _____

LITHOLOGIC LOG

DEPTH (FT)	PACKER TEST INTERVAL	DRILLING METHOD	SAMPLE ID	% CORE RECOVERY	% ROCK QUALITY DESIGNATION (RQD)	% DRILLING FLUID RECOVERY	SPACING	ORIENTATION	CONDITION	WEATHERING	HARDNESS	LITHOLOGIC	VISUAL DESCRIPTION

COMPLETE BOLDED DATA FOR ENTRY INTO TMS

BKD-003 (1/88) FORM COMPLETED BY/DATE _____ TECHNICAL REVIEWER/DATE _____

APPENDIX 5.4

DATA FORM COMPLETION INSTRUCTIONS

Use a pen with black ink that is not water soluble (not a felt-tip pen). Make an entry in each blank. Where there is no data entry, enter UNK for Unknown, NA for Not Applicable, or ND for Not Done. If any procedure was not performed as prescribed, give the reason for the change or omission on the form. To change an entry, draw a single line through it, add the correct information above it, and initial the change.

BOREHOLE LOG (SOIL) FORM AND BOREHOLE LOG (ROCK) FORM

The following information explains the completion of the upper portion of both forms.

1. Facility Code. Five-character code abbreviating the facility name where program activity is being conducted. The first three characters indicate the facility, and the remaining two numbers designate the specific site within the facility.

2. Location ID. Four-character code assigned sequentially to each borehole, test pit, or surface location where chemical, biological, radiological, and other measurements are taken.

3. Coordinates (Ft): North/East. The horizontal location of the borehole. At the time of the field investigation, the exact coordinate position of the borehole will not be known. In this case, write NA in the two spaces on the form. This information will be provided on an addendum form when the survey data comes in after the drilling program has been completed.

4. Ground Elevation. At the time of the field investigation, the exact ground elevation of the borehole will not be known. In this case, write NA in the space on the form. This information will be provided on an addendum to the original data form when the survey data comes in after the drilling program has been completed.

5. Location Type BH is a standard location type for a borehole log or well.

6. Driller Code. A maximum of four characters noting the company responsible for drilling.

7. Completion Date. The date when the borehole reached total depth in the format DD-MMM-YY (01-JAN-88).

8. Diameter. Diameter of borehole in inches and tenths of inches.

9. Depth. Total depth of borehole in feet and tenths of feet.

10. Construction Method. The construction or drilling method used in the advancement of the borehole. A table of various construction methods is included at the bottom of each Borehole Log form.

11. Acceptance Code. A one-character code assigned by the facility manager.

12. Groundwater Levels. Record depth-to-water when encountered during the drilling. Take at least one water level measurement after the completion of drilling and the borehole has been left open or a piezometer or monitoring well has been installed. Before taking water level measurements, see SOP 3.1, Water Level Measurement.

13. Location Description. Description of the approximate borehole location in respect to some recognizable, permanent topographic or geographic location that is nearby.

14. Logger Code. Four-character code identifying the company responsible for collecting the information recorded on the form.

15. Depth in Feet That Depicts Lithologic or Soil Boundaries. Record depths on the Borehole Logs in feet and fractions (tenths of feet).

Conversion Table

Inches to Tenths of Feet

Inches	Tenths of Feet
1	.08
2	.17
3	.25
4	.33
5	.42
6	.50
7	.58
8	.67
9	.75
10	.83
11	.92
12	1.00

16. Sample ID. Four-digit number assigned to ensure that data collected retains uniqueness from other data collected at the same location ID.

A. The following describes the nonrepetitive information required for completing the Borehole Log (Soil) form.

1. Comments. Includes preservation method, acidified or nonacidified type of acid (if acid was used to preserve water sample), and any additional information.

2. Sample Interval. The designated starting and ending depth of the appropriate sampling technique. The following table summarizes common intervals for sample lengths.

APPENDIX 5.4, Continued

Sampling Device	Sample Interval (Feet)	Example Depth Internal
SPT	1.5 or 2.0	14.8 - 16.3
Large-diameter ring sample	1.0, 1.5, or 2.0	14.8 - 15.8
Shelby tube	2.0	14.8 - 16.8
Continuous sampler	5.0	14.8 - 19.8

If the designated sample is 1.5 ft standard penetration test (SPT), but in actuality the SPT only penetrates 0.5 ft (or some length less than the sample interval) in 50 blows per 6 inches or less (refusal blow count), the graphical representation for the sample interval remains at 1.5 ft.

3. Sample Recovery. The numerical representation of the actual sample recovered by the respective sampling method.

4. Sample Retained. The numerical representation of the actual sample retained for future laboratory testing. This number cannot be larger than the sample recovery number. If no sample is recovered, write NR for no recovery in the space provided.

5. Sample Method. One-character code to identify the sampling method used to retain a subsurface soil sample. Sample types are listed below. The box in the lower right-hand corner of the Borehole Log (Soil) form lists the types of samples.

   Sample Types:

   A Auger cuttings
   S 2-inch O.D., 1.38-inch I.D. drive sample
   U 3-inch O.D., 2.42-inch I.D. tube sample
   T 3-inch O.D., thin-walled Shelby tube
   O Other (specify)

6. Blow Count. The number of blows (blow counts) required for every 6 inches of the 18-inch or 24-inch SPT.

7. N Value. The sum of the number of blows in the last two 6-inch intervals of the SPT.

8. Unified Soil Classification System (USCS). Two-character code describing soil strata encountered during drilling. Use the standard Unified Soil Classification (USCS) designations except when a combination of two soils is encountered. In that case, use two different two-character codes (separated by a dash, like CL--ML). Codes may also be derived from the agricultural classifications of soils. Agricultural classifications are not standard and vary from region to region for the same basic soil type.

For the purpose of classifications, the USCS system recognizes 15 soil groups, each having distinctive engineering properties. A listing of these 15 USCS classifications is shown below.

CH	Fat Clays
CL	Lean Clays, Sandy Clays, or Gravelly Clays
GC	Clayey Gravel or Clayey Sandy Gravel
GM	Silty Gravel or Silty Gravelly Sand
GP	Gravel or Sandy Gravel--Poorly Graded
GW	Gravel or Sandy Gravel--Well Graded
MH	Micaceous Silts or Diatomaceous Soils
OH	Fat Organic Clays
OL	Organic Silts or Lean Organic Clays
PT	Peat, Humus, and Other Organic Swamp Materials
SC	Clayey Sand or Clayey Gravelly Sand
SM	Silty Sand or Silty Gravelly Sand
SP	Sand or Gravelly Sand--Poorly Graded
SW	Sand or Gravelly Sand--Well Graded

9. Visual Description. The soil description will be according to the ASTM Designation, D 2488-69 Standard Recommended Practice for Description of Soils (Visual-Manual Procedure). Appendixes 5.5 and 5.6 include checklists outlining minimum descriptions of fine-grained and coarse-grained soils.

B. The following describes the nonrepetitive information required to complete the Borehole Log (Rock) form.

1. Packer Test Interval. A graphical representation that denotes the bottom of the top packer and the top of the bottom packer by a solid line drawn in the column.

2. Drilling Method. The drilling method could be, but is not limited to, gear bit, NX rock coring, or NQ wireline rock coring. The box in the lower right-hand corner of the Borehole Log (Rock) form lists the accepted abbreviations for drilling methods shown below.

Drilling Methods

GB	Gearbit (specify diameter)
NX	NX Rock Coring
NQ	NQ Wireline Rock Coring
AR	Air Rotary
MR	Mud Rotary
WR	Water Rotary
CT	Cable Tool

3. Percent Core Recovery. The total length of the recovered core multiplied by 100 and divided by the length of the core run results in the percentage of recovery. Record the recovery of core to the nearest 5%.

4. Rock Quality Designation (RQD). The Rock Quality Designation (RQD) is computed by summing the lengths of all pieces of core equal to or longer than 4 inches and dividing by the percent recovery. The result is multiplied by 10 to yield the RQD in a percentage form that can be recorded to the nearest 5%.

$$RQD = \frac{\text{Sum of Length} > 4 \text{ inches}}{\text{Total Length of Core}}$$

5. Percent Drilling Fluid Recovery. After estimating the return flow, a percentage can be obtained. Record a change in the fluid recovery rates. If the recovery is essentially the same for the entire core run, only one call per change is necessary. Record it to the nearest 10%.

6. Spacing. Describe the spacing of discontinuities with the symbols or verbiage described in section 3.3.1.M.

7. Orientation. Record this call to the nearest 10°.

8. Condition. Examples of conditions are smooth, clean, rough, or stained.

9. Weathering. Describes as fresh the degree of weathering (slight, moderate, or high), complete, or residual soil.

10. Hardness. Describes sample as extremely hard, very hard, hard, soft, or very soft.

11. Lithologic. Two-character code describing the lithology encountered during various subsurface exploratory investigations. Use the geologic lithology codes listed in Appendix 5.7.

12. Visual Description. Other petrologic descriptors to assist in the classification of the rock.

APPENDIX 5.5

CHECKLIST FOR DESCRIPTION OF FINE-GRAINED SOILS

1. Typical Name

   Sandy silt, silt, clayey silt, sandy clay, silty clay, clay, organic silt, organic clay, or fill

2. Size Distribution

   Approximate percent gravel, sand, and fines in fractions finer than three inches

3. Color

   Note presence of mottling and banding, as well as soil color

4. Moisture Content

   Dry, moist, wet, or saturated

5. Consistency

   Soft, firm (medium), stiff, very stiff, or hard

6. Structure

   Stratified, laminated (varved), fissured, blocky, lensed, or homogeneous (nonstratified)

7. Cementation

   Weak, strong, or absent

8. Local or Geologic Name

9. Group Symbol

   U.S.C.S. Soil Classification

Group Symbol	Group Name
CL	Lean clay (low to medium plasticity)
ML	Silt
OL	Organic clay or silt (lean)
CH	Fat clay (high plasticity)
MH	Elastic silt
OH	Organic clay or silt (fat)
PT	Peat

APPENDIX 5.6

CHECKLIST FOR DESCRIPTION OF COARSE-GRAINED SOILS

1. Typical Name

   Sand, clayey sand, silty sand, gravel, clayey gravel, silty gravel, cobbles, or boulders

2. Gradation

   Well graded (uniformly graded) or poorly graded (gap-graded)

3. Size Distribution

   Approximate percent gravel, sand, and fines in fractions finer than three inches.

4. Grain Shape

   Angular, subangular, subrounded, or rounded

5. Color

6. Moisture Content

   Dry, moist, wet, or saturated

7. Structure

   Stratified, lensed, or nonstratified

8. Cementation

   Weak or strong

9. Local or Geologic Name

10. Group Symbol

    U.S.C.S. Soil Classification

Group Symbol	Group Name
GW	Well-graded gravel
GP	Poorly graded gravel
GM	Silty gravel
GC	Clayey gravel
SW	Well-graded sands
SP	Poorly graded sands
SM	Silty sand
SC	Clayey sand

APPENDIX 5.7

GEOLOGIC LITHOLOGY CODES

LITHOLOGIC	NAME/DESCRIPTION
AL	Alluvium
BA	Basalt
BR	Undifferentiated Bedrock
BT	Bandelier Tuff
CG	Conglomerate
CH	Fat Clays
CL	Lean Clays, Sandy or Silty Clays, or Gravelly Clays
CA	Calcrete
CR	Chert
CS	Claystone
DI	Diorite
DO	Dolomite
FL	Fill Material
GC	Clayey Gravel or Clayey Sandy Gravel Soils
GM	Silty Gravel or Silty Soils
GN	Gneiss
GP	Gravel or Sandy Gravel, Poorly Graded
GR	Granite
GW	Gravel or Sandy Gravel, Well Graded
GY	Gypsum
LG	Lignite
LS	Limestone
MH	Micaceous Silts or Diatomaceous Soils
ML	Silts, Sands, or Clayey Fine Sands
NR	No Recovery of Data For Classifying
OH	Organic Clays of High Plasticity
OL	Organic Silts or Organic Clays of Low Plasticity
OT	Other General Materials
PT	Peat, Humus, and Other Organic Swamp Soils
QT	Quartzite
RY	Rhyolite
SA	Salt
SC	Clayey Sand or Sand-Clay Mixture
SH	Shale
SI	Silcrete, Poorly Graded
SM	Silty Sand or Sand-Silt Mixtures
SP	Sand or Gravelly Sand, Poorly Graded
SS	Sandstone
ST	Siltstone
SW	Sand or Gravelly Sand, Well Graded
TF	Tuff
TI	Till
TP	Unknown
TS	Topsoil, Undifferentiated
VO	Volcanics

STANDARD OPERATING PROCEDURE 5.2

SOIL SAMPLING WITH A SPADE AND SCOOP

1. PURPOSE

To describe a method for collecting a soil sample less than 4 ft below the land surface.

2. DISCUSSION

The Remedial Investigation Plan (RIP) contains specific details about the procedures and equipment for this SOP. Refer to the RIP for the type of samples to be collected. Collection and measurement of samples and documentation of data will be performed as described in the associated procedures.

Sampling of the soil horizons above the groundwater table can detect contaminants before they migrate into the water table. Soil sample analysis can assist in determining the extent of the contaminant source term and establish the amount of contamination absorbed into aquifer solids that have the potential to contaminate groundwater.

Accurate, representative samples can be collected with this procedure, if care and precision are demonstrated by the technician. The spade-and-scoop method can be used in most soil types, but is somewhat limited to sampling near the soil surface. Sample collection from depths greater than 50 inches can become extremely labor-intensive. Collection of samples from near the soil surface can be accomplished with tools like spades, shovels, and scoops. Spades and shovels will be used to remove surficial material to the required depth. Then a stainless steel or Teflon scoop is used to collect the sample. Devices plated with chrome or other materials are not acceptable for sample collection. The use of a flat, pointed mason trowel often aids in collecting undisturbed soil profile samples. To the extent possible, the sampling process should not alter the medium being investigated. Samples should be kept at their at-depth temperature or lower, protected from direct light, sealed tightly in glass bottles, and analyzed as soon as possible.

3. PROCEDURES

3.1. Associated Procedures

Before every operation, a review of the SOPs 1.1-1.10 is necessary. These SOPs contain information on the performance of field activities. They should be consulted for specific information about equipment and supplies; sample collection, preservation, packaging, and shipping; decontamination procedures; and documentation requirements. Procedures directly associated with this SOP are listed below.

SOP No.	SOP Title
1.1	General Instructions for Field Personnel
1.3	Sample Control and Documentation
1.4	Sample Containers and Preservation

SOP No.	SOP Title
1.5	Guide to Handling, Packaging, and Shipping of Samples
1.6	General Equipment Decontamination
5.1	Soil and Rock Borehole Logging and Sampling

3.2. Preparation

3.2.1. Office

A. Review the RIP and SOPs listed in Section 3.1.

B. Coordinate schedules/actions with the installation staff.

C. Obtain appropriate permission for property access.

D. Assemble the equipment and supplies listed in Appendix 5.1. Ensure the proper operation of all sampling equipment.

E. Notify the analytical laboratory of sample types, the number of samples, and the approximate arrival date.

F. Contact the carrier that will transport samples to obtain information on regulations and specifications.

3.2.2. Documentation

A. Obtain a logbook from the QA officer.

B. Record results of the equipment check in the logbook.

C. Obtain a sufficient number of appropriate ER Program data collection forms (see INDEX TO SOPs).

D. Consult the ER Program data administrator for a current list of information management codes, location IDs, and sample numbers used in the completion of data forms.

3.2.3. Field

Decontaminate all sampling equipment before taking the first sample and between sampling intervals (see SOP 1.6, General Equipment Decontamination, and RIP).

3.3. Operation

A. Whenever a sample is collected, complete a description of the sample using the Borehole Log (Soil) form. Copies of this form and instructions for completing the form are supplied in SOP 5.1, Soil and Rock Borehole Logging and Sampling.

B. Procedure for Soil Sampling

1. Carefully remove the top layer of soil to the desired sample depth with a precleaned spade.

2. Using a precleaned, stainless steel or Teflon scoop or trowel, remove and discard a thin layer of soil from the area that comes in contact with the shovel.

3. Transfer the sample into an appropriate sample bottle with a stainless steel or Teflon scoop, lab spoon, or equivalent.

4. If required, be sure the Teflon liner is present in the cap. Secure the cap tightly. Preservation with chemical additives is not necessary; it is achieved by cooling the sample with ice. If feasible, minimize holding time and transport the sample to the laboratory no later than two days after collection.

5. Label the sample bottle with the appropriate sample tag. Be sure to label the tag carefully and clearly, addressing all the categories of parameters.

   NOTE: Whenever a sample is collected, a custody record must be initiated on the Custody Transfer Record/Lab Work Request form and a Soil Sample Identification Label affixed to the sample container. SOP 1.3, Sample Control and Documentation, contains copies of the form and label and instructions for completing the form and label.

6. Decontaminate equipment between sample locations according to SOP 1.6, General Equipment Decontamination.

7. Fill the hole and replace any grass turf.

3.4. Postoperation

3.4.1. Field

A. Ensure that all equipment is accounted for, decontaminated (see SOP 1.6, General Equipment Decontamination), and ready for shipment.

B. Restore the site to presampling conditions and fill open sampling holes as specified in the RIP.

C. Make sure all sampling locations are properly staked and the location ID is readily visible on the location stake.

D. Prepare samples and transport according to SOP 1.3, Sample Control and Documentation; SOP 1.4, Sample Containers and Preservation; and SOP 1.5, Guide to Handling, Packaging, and Shipping of Samples.

3.4.2. Documentation

A. Record pertinent sample location information in the logbook.

B. Record cleanup and hole abandonment procedures and any uncompleted work (like site restoration or long-term monitoring) in the logbook.

C. Complete logbook entries, verify the accuracy of entries, and sign/initial all pages.

D. Review data collection forms for completeness.

3.4.3. Office

A. Deliver original forms and logbooks to the site manager for technical review. He/she will review, sign forms, and transmit to the document control officer (copies to the files) for eventual delivery to the Department of Energy.

B. Inventory equipment and supplies. Repair or replace all broken or damaged equipment. Replace expendable items. Return equipment to the equipment manager and report incidents of malfunction or damage.

C. Contact the analytical laboratory to ensure that the samples arrived safely and the instructions for sample analyses are clearly understood.

4. SOURCE

Ford, Patrick J., Paul J. Turina, and Douglas E. Seely. 1984. Available Sampling Methods, 2d ed. Vol. 2, Characterization of Hazardous Waste Sites - A Methods Manual. U.S. Environmental Protection Agency document EPA/600/4-84/076. Washington, D.C.: U.S. Government Printing Office.

5. APPENDIX

5.1. Equipment and Supplies Checklist

APPENDIX 5.1

EQUIPMENT AND SUPPLIES CHECKLIST

_____ Stainless steel scoop or lab spoon (scoopulas)

_____ Stainless steel shovel or fat-pointed mason trowel

_____ Stainless steel spade

_____ Tape measure (tenths)

_____ Teflon sheets or stainless steel sampling trays

_____ Plastic Sheet

_____ Alconox

_____ Brushes (long handle, scrub, and wire)

_____ Galvanized tub

_____ Trash bags

_____ Buckets (galvanized, stainless steel, and plastic)

_____ Garden pressure sprayer

_____ Cleaning wipes

_____ Kim wipes

_____ Storage containers for waste decontamination solutions

_____ Blue Ice or equivalent

_____ Disposable laboratory gloves

_____ Camera and film

_____ Sample containers and preservatives

_____ Any additional supplies listed in associated procedures, as needed

STANDARD OPERATING PROCEDURE 5.3

SUBSURFACE SOLID SAMPLING WITH HAND AUGER AND THIN-WALL SAMPLER

1. PURPOSE

To define a method of collecting subsurface solid samples with a hand auger and thin-wall tube sampler.

2. DISCUSSION

The Remedial Investigation Plan (RIP) contains specific details about the procedures and equipment for this SOP. Refer to the RIP for the type of samples to be collected. Collection and measurement of samples and the documentation of data will be performed as described in the associated procedures.

Solid samples can be recovered directly with a hand auger or with a thin-wall tube sampler. The thin-wall tube sampler provides a less disturbed sample than that obtained with a hand auger. However, it may not be possible to force the thin-wall tube sampler through some soil, and sampling with the hand auger may be the most viable alternative. It is usually not practical to use the hand auger or thin-wall sampler at depths beyond 20 ft.

3. PROCEDURES

3.1. Associated Procedures

Before every operation, a review of the SOPs 1.1-1.10 is necessary. These SOPs contain information on the performance of field activities. They should be consulted for specific information about equipment and supplies; sample collection, preservation, packaging, and shipping; decontamination procedures; and documentation requirements. Procedures directly associated with this SOP are listed below.

SOP No.	SOP Title
1.1	General Instructions for Field Personnel
1.3	Sample Control and Documentation
1.4	Sample Containers and Preservation
1.5	Guide to Handling, Packaging, and Shipping of Samples
1.6	Equipment Decontamination

3.2. Preparation

3.2.1. Office

A. Review the RIP and SOPs listed in Section 3.1.

B. Coordinate schedules/actions with the installation staff.

C. Obtain appropriate permission for property access.

D. Assemble the equipment and supplies listed in Appendix 5.1. Ensure the proper operation of all sampling equipment.

E. Notify the analytical laboratory of sample types, the number of samples, and the approximate arrival date.

F. Contact the carrier that will transport samples to obtain information on regulations and specifications.

3.2.2. Documentation

A. Obtain a lobgook from the QA officer.

B. Record results of the equipment check in the logbook.

C. Obtain a sufficient number of the appropriate ER Program data collection forms (see INDEX TO SOPs).

D. Consult the ER Program data administrator for a current list of information management codes, location IDs, and sample numbers used in the completion of data forms.

E. Document field conditions, unusual circumstances, and weather in the logbook.

3.2.3. Field

Decontaminate all sampling equipment before taking the first sample and between sampling intervals (see SOP 1.6, General Equipment Decontamination, and the RIP).

3.3. Operation

This method uses an auger, a series of rods, a T handle, and a thin-wall tube or split-spoon sampler (Appendix 5.2). Bore a hole to a desired sampling depth (up to 20 ft) with the auger and then withdraw it. Replace the auger tip with a tube core (sampler), lower it down the borehole, and drive the auger into the soil at the completion depth. Withdraw the core and collect the sample.

Three types of augers are available for this method of sampling. They are bucket-type, continuous flight (screw), and posthole augers. The bucket-type auger is more appropriate for direct sample recovery. The bucket-type auger is fast and provides a large volume of sample. When a continuous flight auger is used, the sample can be collected directly off the flights that are usually in 5-ft intervals. The continuous flight auger is satisfactory for use when a composite of the complete soil column is desired. Posthole augers have limited utility for sample collection because they are designed to

cut through fibrous, rooted swampy areas. In soil where the borehole will not remain open when the tool is removed, use a temporary casing until the desired sampling depth is reached.

3.3.1 Collection of Samples

A. Clear any surface debris (twigs, rocks, and litter) from the area to be sampled. It may be advisable to remove the first three to six inches of surface soil for an area approximately six inches in radius around the drilling location.

B. Begin augering, periodically removing accumulated soils. This prevents accidentally brushing loose material back down the borehole when removing the auger or adding drill rods.

C. After reaching the desired depth, slowly and carefully remove the auger from boring.

   NOTE: When sampling directly from the auger, collect the sample after the auger is removed from boring and proceed to step I.

D. Remove auger tip from drill rods and replace with a precleaned, thin-wall tube sampler. Install the proper cutting tip.

E. Lower the tube sampler down the borehole, being careful not to scrape soil from the sides of the borehole that will fall into the bottom of the borehole. Gradually force the tube sampler into the soil. Care should be taken to avoid scraping the borehole sides. Avoid hammering the drill rods to facilitate coring because the vibrations may cause the boring walls to collapse.

F. Remove the tube sampler and unscrew the drill rods.

G. Remove the cutting tip and remove the core from the device.

H. Discard the top of the core (approximately one inch, which represents any material collected by the tube sampler before penetration of the layer in question).

I. Place sample into an appropriate container.

   NOTE: Whenever a sample is collected, a custody record must be initiated on the Custody Transfer Record/Lab Work Request form and a Soil Sample Identification Label affixed to the sample container. SOP 1.3, Sample Control and Documentation, contains copies of the form and label and instructions for completing the form and label.

J. If required, be sure a Teflon liner is present in the cap. Secure the cap tightly onto the sample container. Preserve the sample container with ice or in a refrigerator. Freezing may be required (for instance, Hg or tritium determinations). Consult SOP 1.5, Guide To Handling, Packaging, and Shipping of Samples, and SOP 1.4, Sample Containers and Preservation.

K. If another sample is to be collected at a greater depth in the same hole, reattach the auger bit to the drill and assembly and follow steps 3-11.

L. Refill the hole and restore the sampling area according to instructions provided in the RIP.

3.4. Postoperation

3.4.1. Field

A. Ensure that all equipment is accounted for, decontaminated (see SOP 1.6, General Equipment Decontamination), and ready for shipment.

B. Restore the site to presampling conditions and fill open sampling holes as specified in the RIP.

C. Make sure all sampling locations are properly staked and the location ID is readily visible on the location stake.

D. Prepare samples and transport according to SOP 1.3, Sample Control and Documentation; SOP 1.4, Sample Containers and Preservation; and SOP 1.5, Guide to Handling, Packaging, and Shipping of Samples.

3.4.2. Documentation

A. Record cleanup and hole abandonment procedures and any uncompleted work (like site restoration or long-term monitoring) in the logbook.

B. Complete logbook entries, verify the accuracy of entries, and sign/initial all pages.

C. Review data collection forms for completeness.

3.4.3. Office

A. Deliver original forms and logbooks to the site manager for technical review. He/she will review, sign forms, and transmit to the document control officer (copies to the files) for eventual delivery to the Department of Energy.

B. Inventory equipment and supplies. Repair or replace all broken or damaged equipment. Replace expendable items. Return equipment to the equipment manager and report incidents of malfunction or damage.

C. Contact the analytical laboratory to ensure that samples arrived safely and instructions for sample analyses are clearly understood.

4. SOURCE

deVera, E. R., B. P. Simmons, R. D. Stephens, and D. L. Storm. 1980. "Samplers and Sampling Procedures for Hazardous Waste Streams." U.S. Environmental Protection Agency report EPA 600/2-80-018, January 1980. Washington, D.C.: U.S. Government Printing Office.

5. APPENDIXES

5.1. Equipment and Supplies Checklist

5.2. Augers and Thin-Wall Tube Sampler

APPENDIX 5.1

EQUIPMENT AND SUPPLIES CHECKLIST

- _____ Thin-wall tube sampler
- _____ Drill rods
- _____ T handle
- _____ Auger
  - _____ Bucket type
  - _____ Continuous flight
  - _____ Posthole
- _____ Sample container(s)
- _____ Decontamination equipment
  - _____ Sprayer
  - _____ Distilled water
  - _____ Scrub brush
  - _____ Methanol
  - _____ Disposable laboratory gloves
- _____ Combustible gas indicator
- _____ Portable photoionization detector (PID) or flame ionization detector (FID)
- _____ Blue Ice or equivalent
- _____ Plastic sheet
- _____ Any additional supplies listed in associated procedures, as needed

APPENDIX 5.2

AUGERS AND THIN-WALL TUBE SAMPLER

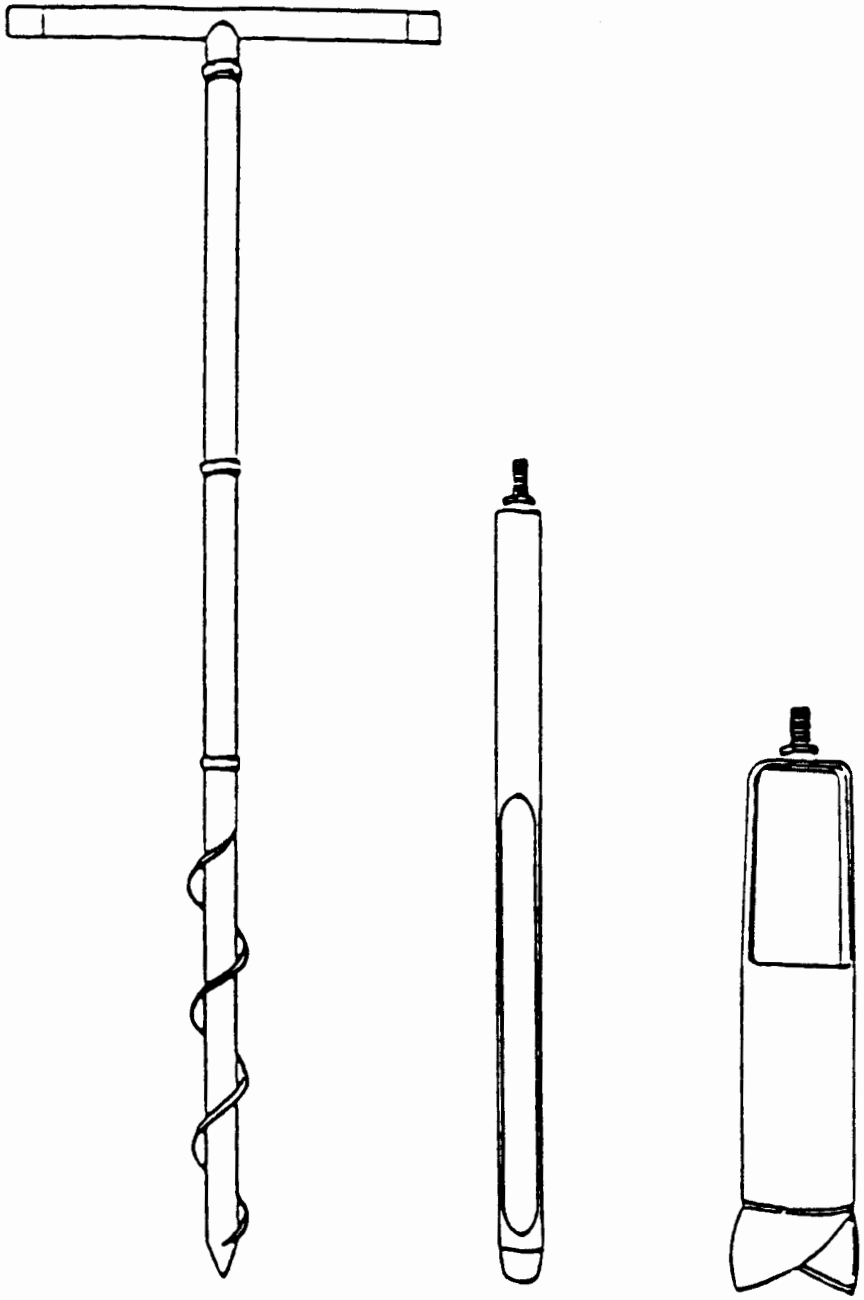

STANDARD OPERATING PROCEDURE 5.4

GENERAL SOIL GAS SAMPLING AND FIELD CHEMICAL ANALYSIS

1. PURPOSE

To define a method that ensures acceptable, consistent soil gas sampling and onsite analysis with a gas chromatograph for volatile organic contaminants.

2. DISCUSSION

The Remedial Investigation Plan (RIP) contains general details about the procedures for this SOP. This work generally will be conducted by a subcontractor who will provide specific sampling and equipment procedures. Refer to the RIP for the number of samples to be collected. The documentation of data will be performed as described in the associated procedures.

Soil gas surveys may be used as a reconnaissance tool to delineate the areal extent of volatile organic contamination resulting from groundwater and vadose-zone contamination. Based on the distribution of volatile organic concentrations in soil vapors, a soil gas survey may support the placement of monitoring wells.

The method involves pumping a small amount of soil gas out of the soil matrix through a collection tube driven into the ground, collecting soil gases in a tube filled with adsorbents, and analyzing the desorbed gases for the presence of volatile organic contaminants through gas chromatography.

3. PROCEDURES

3.1. Associated Procedures

Before every operation, a review of the SOPs 1.1-1.10 is necessary. These SOPs contain information on the performance of field activities. They should be consulted for specific information about equipment and supplies; sample collection, preservation, packaging, and shipping; decontamination procedures; and documentation requirements. Procedures directly associated with this SOP are listed below.

SOP No.	SOP Title
1.1	General Instructions for Field Personnel
1.6	General Equipment Decontamination

3.2. Preparation

3.2.1. Office

A. Review the RIP and SOPs listed in Section 3.1.

B. Coordinate schedules/actions with the installation staff.

C. Obtain appropriate permission for property access.

3.2.2. **Documentation**

A. Obtain a logbook from the QA officer.

B. Record results of the equipment check in the logbook.

C. Obtain a sufficient number of the appropriate ER Program data collection forms (see INDEX TO SOPs).

D. Consult the ER Program data administrator for a current list of information management codes, location IDs, and sample numbers used in the completion of data forms.

E. Record field conditions, unusual circumstances, and weather conditions in the logbook. Whenever possible, use photographs to document activities.

3.2.3. **Field**

A. Stake the locations for the proposed sampling points.

B. Clear the working areas of all brush and minor obstruction.

C. Decontaminate all sampling equipment before the initiation of sampling and between sampling events as described in SOP 1.6, General Equipment Decontamination. Alternately, a quantity of sampling probes can be decontaminated at the same time and carried into the field. In this manner, a clean probe can be utilized between sampling events.

3.3. **Operation**

3.3.1. **Collection of Soil Gas Sampling**

A. Drive/push sample probe to desired depth or to refusal. The site manager or appointed representative will determine if soil gases will be collected from the point of refusal or another attempt will be made next to the first location.

B. Collect the sample following RIP specifications.

C. Remove the sample probe.

D. Whenever a soil gas sample is collected, complete a description of sampling-related activities using the Soil Gas Data form (Appendix 5.1). Fill out the form as described in Appendix 5.2.

3.3.2. **Sample Analysis**

Samples should be analyzed in a mobile lab at the site; the criteria described below will apply (with more detailed specifics supplied by the subcontractor).

A. Use a gas chromatograph equipped with a detector that is sensitive to specified contaminants. The use of one or more of the following types of

detectors may be necessary: electron capture, flame ionization, photoionization, or Hall.

B. When appropriate, use a chromatographic column based on the sensitivity required (for example, megabore or capillary).

C. Include lab blanks consisting of pure carrier gas in the analysis. Consult the RIP or the approved subcontractor's Quality Assurance (QA) Plan for the number or percentage of lab blanks.

D. In the analysis, include external standards that are appropriate to the contaminants and field concentrations. Consult the RIP or the approved subcontractor's QA Plan for the number of standard samples.

E. In the analysis, include a field blank collected by drawing ambient air through the sample collection equipment as if it were soil gas. Consult the RIP for the number or percentage of field blanks.

F. Run replicate analyses on the number of samples specified in the RIP.

G. Visually inspect chromatograms for errors that may affect the validity of the data. A sample or particular component may be eliminated from consideration on the basis of visual judgment. Examples of elimination criteria include badly skewed or tailing peaks, failure of the integrator to properly separate closely eluting or tailing peaks, and the presence of transient peaks that mask or interfere with the proper quantification of a peak of interest. A trained analytical chemist should make notes directly on the chromatogram recording the reason for the elimination of data points or runs.

H. Enter appropriate readings and field and analytical laboratory results on the Soil Gas Data form (Appendix 5.1). Associated documentation concerning lab blanks, standards, field blanks, and replicates will be delivered to the field manager.

3.4. Postoperation

3.4.1. Field

A. Ensure that all equipment is accounted for, decontaminated (see SOP 1.6, General Equipment Decontamination), and ready for shipment.

B. Restore the site to presampling conditions and fill open sampling holes as specified in the RIP.

C. Make sure all survey or sampling locations are properly staked and the location ID is readily visible on the location stake.

3.4.2. Documentation

A. Record cleanup and hole abondonment procedures and any uncompleted work (like site restoration or long-term monitoring) in the logbook.

B. Complete logbook entries, verify the accuracy of entries, and sign/initial all pages.

C. Review data collection forms for completeness.

3.4.3. Office

A. Deliver original forms, logbooks, and laboratory calibration documentation to the site manager for technical review. He/she will review, sign forms, and transmit to the document control officer (copies to the files) for eventual delivery to the Department of Energy.

B. Inventory equipment and supplies. Repair or replace all broken or damaged equipment. Replace expendable items. Return equipment to the equipment manager and report incidents of malfunction or damage.

4. SOURCES

HydroGeoChem, Inc. 1987. "Soil Gas Sampling, Analysis and QA Procedures." Report dated January 15, 1987. Tucson, Arizona.

Marrin, D. L., H. Herfoot, and H. B. Lockheed. 1986. "Soil Gas Surveying for Subsurface Organic Contaminants." Report dated October 22, 1986. Las Vegas, Nevada.

Marrin, Donn L., and Glenn M. Thompson. 1980. "Gaseous Behavior of TCE Overlying a Contaminated Aquifer." Groundwater 25, 1: 21-27.

Tracer Research Corporation. 1985. Service Literature. Tucson, Arizona.

5. APPENDIXES

5.1. Soil Gas Data Form

5.2. Data Form Completion

APPENDIX 5.1

SOIL GAS DATA FORM

SOIL GAS DATA

PAGE ____ OF ____

FACILITY CODE ____________________

LOCATION ID ____________________ LOG DATE ____________________

COMPOUND ANALYZED	MEASURED CONCENTRATION UNITS		CHROMATOGRAM NO
	1st	2nd	

[illegible] (1/[illegible])

APPENDIX 5.2

DATA FORM COMPLETION

Use a pen with black ink that is not water soluble (not a felt-tip pen). Make an entry in each blank. Where there is no data entry, enter UNK for Unknown, NA for Not Applicable, or ND for Not Done. If any procedure was not performed as prescribed, give the reason for the change or omission on the form. To change an entry, draw a single line through it, add the correct information above it, and initial the change.

SOIL GAS DATA FORM

1. Facility Code. Five-character code abbreviating the facility name where program activity is being conducted. The first three characters indicate the facility, and the remaining two numbers designate the specific site within the facility.

2. Location ID. Four-character code assigned sequentially to each borehole, test pit, or surface location where chemical, biological, radiological, and other measurements are taken.

3. Sample ID. Four-digit number assigned to ensure that data collected retains uniqueness from other data collected at the same location ID.

4. Logger Code. Three-character or four-character code identifying the company responsible for collecting the information recorded on the form.

5. Acceptance Code. One-character code assigned by the site manager.

6. Log Date. The date the information recorded on the form was obtained in the format DD-MMM-YY (01-JAN-88).

7. Time. The hours or days during which work occurred.

8. Weather. State of the atmosphere with respect to heat or cold, wetness or dryness, calm or storm, and clearness or cloudiness.

9. Air Temp (C). Degrees as measured on the centigrade scale.

10. Analytical Lab Code. A maximum of four characters noting the laboratory responsible for analysis.

11. Field Rep. The name of the field representative.

12. Surface Conditions. A description of the ground surface in the area around the soil gas sampling location. It is important to note any stains, ponded water, soil type, and wetness of soil.

13. Probe No. The identification number of the probe.

14. Cylinder No. The model number of the cylinder.

15. Adapter No. The model number of the adapter.

16. Vacuum Gauge Reading. The gauge reading on the vacuum indicator at the time just before the sample is collected. This reading should be the same as the pump capacity for producing a vacuum, ensuring that a tight seal is present and leakage does not occur.

17. Probe Depth (Ft). The depth at which the soil gas sample is collected.

18. Cartridge No. The carbon adsorption cartridge, glass vessel, or syringe that is used to collect a soil gas sample.

19. Probe Volume. The volume of gas contained in the probe that must be evacuated before the sample is collected. For probes of the same lengths and inner diameters, compute this value only once.

20. Pump Flow Rate and Duration. The flow rate of the pump determined by a rotometer and the time in seconds that the pump operates in evacuating the probe.

21. Column Flow Rate and Duration. The flow rate through the cartridge that is determined by the reading and time in seconds that the pump operates while the sample is being collected.

22. Additional Comments. Any additional information.

23. Lab Receipt. The name of the laboratory that receives the sample for analysis.

24. Name/Signature. The name and signature of the laboratory representative who accepts the sample for analysis.

25. Time/Date. The time and date when the soil gas sample was collected in the format HHMM/DD-MMM-YY (1410/01-JAN-88).

26. Lab Sample Control ID. The identifying number assigned to the sample by the laboratory.

27. Analysis Checked By. The name of the laboratory representative who verified that the analysis has been performed according to applicable internal QA/QC procedures.

28. Date Checked. The date the analysis was verified by the laboratory respresentative in the format DD-MMM-YY (01-JAN-88).

29. Compound Analyzed. The names of the compounds identified in the soil gas.

30. Measured Concentration 1st. The value of the integrated area under the chromatogram peak for each compound identified.

    Units of Measure. The units in which the measured concentrations were recorded ($\mu g/l$).

31. Measured Concentration 2nd. The second value obtained by reanalyzing the sample.

32. Chromatogram No. The number of the chromatogram run that was used to determine the measured concentrations in the soil gas sample.

STANDARD OPERATING PROCEDURE 5.5

INSTALLATION/OPERATION/SAMPLING OF SOIL-WATER SAMPLERS

1. PURPOSE

To define the method for placing pressure-vacuum soil water samples, collecting soil water samples, and preserving the samples.

2. DISCUSSION

The Remedial Investigation Plan (RIP) contains specific details about the procedures and equipment for this SOP. The number and locations where soil water samples are to be collected are specified in the RIP. The number of sampler installations depends on the variability of the subsurface geologic material and the desired precision. Collection and measurement of samples and documentation of data will be performed as described in the associated procedures.

Soil water samplers (lysimeters) are efficient and cost-effective devices used to collect water samples from the vadose zone. The soil water sampler collects soil pore water by creating a vacuum within the sampling vessel. Pore water moves toward the sampler and enters the vessel through a porous section at the base of the sampler.

3. PROCEDURES

3.1. Associated Procedures

Before every operation, a review of the SOPs 1.1-1.10 is necessary. These SOPs contain information on the performance of field activities. They should be consulted for specific information about equipment and supplies; sample collection, preservation, packaging and shipping; decontamination procedures; and documentation requirements. Procedures directly associated with this SOP are listed below.

SOP No.	SOP Title
1.1	General Instructions for Field Personnel
1.3	Sample Control and Documentation
1.4	Sample Containers and Preservation
1.5	Guide to Handling, Packaging, and Shipping of Samples
1.6	General Equipment Decontamination
2.2	Field Measurements on Ground and Surface Water Samples
2.8	Sampling for Volatile Organics

3.2. Preparation

3.2.1. Office

A. Review the RIP and SOPs listed in Section 3.1.

B. Coordinate schedules/actions with the installation staff.

C. Obtain appropriate permission for property access.

D. Assemble the equipment and supplies listed in Appendix 5.1. Ensure the proper operation of all sampling equipment.

E. Notify the analytical laboratory of sample types, the number of samples, and the approximate arrival date.

F. Contact the carrier that will transport samples to obtain information on regulations and specifications.

3.2.2. Documentation

A. Obtain a logbook from the QA officer.

B. Record results of the equipment check in the logbook.

C. Obtain a sufficient number of the appropriate ER Program data collection forms (see INDEX TO SOPs).

D. Consult the ER Program data administrator for a current list of information management codes, location IDs, and sample numbers used in the completion of data forms.

3.2.3. Field

A. Decontaminate all installation equipment according to SOP 1.6, General Equipment Decontamination.

B. Check soil water samplers and materials to ensure that no damage has resulted from shipping.

3.3. Operation

The site manager will identify the area and depth (up to a maximum of 50 ft) where the soil water samplers are to be installed. Do not place samplers within 5 ft of a tensiometer. There is no recommended method for determining station locations that is applicable to all conditions. Each site requires preliminary investigation, interpretation of early results, adjustments in frequency, and the location of tensiometer stations to meet its unique requirements. Standard sampling analysis incorporating these variables may be used to establish the sampling frequency (Allmaras 1965; Krumbein and Graybill 1965).

Limit the potential for damage from intrusion by people, wildlife, livestock, or mechanical equipment. Fencing around the site may be necessary. Use four posts with two strands of barbed wire for fencing. Do not cover the surface area directly above

the samplers in a way that interferes with the normal percolation of soil moisture down to the depth of the soil water sampler.

3.3.1. Drilling Holes

The following guidelines are provided for drilling holes and installing the suction-water samplers. Before drilling, immerse the porous ceramic cups of the soil water samplers in a mixture of distilled water and concentrated nitric acid until saturated (approximately one hr). Use distilled water to thoroughly flush the sampler cup before installation. The porous cup must be saturated when installed.

Drill holes with a bit having a minimum diameter of four inches. Use hollow-stem augers (HSA) or air rotary equipment, depending on subsurface conditions. Use HSA drilling provided by a standard soil-sampling drill rig in unconsolidated, granular soils where there is a potential for borehole wall collapse and cave-in. Use air rotary drilling only for well-consolidated soils, clays, or tight silts where the borehole wall can be expected to maintain its integrity. Do not add drilling mud or water when drilling.

3.3.2 Assembly of Soil Water Sampler

A. Once the hole has been drilled, determine the length of access tubes (1/4-inch polyethylene tubing). Two lengths of access tubes are required.

   1. Push the discharge tube through the neoprene plug so that the end of the tubing reaches within 1/8 inch of the bottom of the porous ceramic cup.

   2. The pressure vacuum tube should protrude approximately 1 inch through the neoprene plug.

B. Leave sufficient tubing sticking above the neoprene plug so that the access tubes are approximately 6 inches above the ground level after installation of the soil water sampler. Cut the discharge tube approximately 2 inches longer than the pressure-vacuum tube to identify the different tubes. Slip approximately 6 2/16-inch I.D. by 1/8-inch wall neoprene tube over the ends of each access tube. After installing the access tubes, coat the sides of the neoprene plug with vacuum grease and insert them into the body tube. The plug is held in place with the clamp ring, which is tightened by using a nail or similar object. Tighten the ring until it meets the body tube (Appendix 5.4.1).

3.3.3 Installation of Soil Moisture (Water) Sampler

Once the soil water sampler has been assembled, install the sampler into the drilled or bored hole. The primary concern during installation is that the porous ceramic cup is in tight, intimate contact with the soil so that soil moisture can readily move from the soil to the soil water sampler.

A. Hollow-Stem Auger Drilling

   1. Install the soil water sampler through the hollow stem while the auger is in the ground.

   2. Terminate augering approximately 1 ft above the desired depth of instrument installation.

3. Use a split spoon (3-inch O.D.) to knock the plug out of the bottom of the auger and collect the final foot of material.

4. After completion of the boring, add a 1-inch layer of slurry of ground-up native soil or silica flour (200-mesh silica flour) made with only distilled water to the bottom of the borehole. Use the silica flour when native soils are clayey or contaminated soils above the installation cannot be distinguished or prevented from affecting the installation.

5. Install the soil water sampler so that it rests directly on the ground-up native soil or silica flour as depicted in Appendix 5.4.2.

6. Add a 2-inch to 4-inch layer of ground-up native soil or silica-flour slurry to the hole, enveloping the ceramic tip of the instrument.

7. Add 1 ft of moist, 50-mesh quartz sand.

8. Retract the HSA 3 to 4 ft and gently tamp the sand with a 1-inch-diameter rod or tremie pipe inserted through the hollow stem. Using PVC pipe in 5-ft threaded intervals is recommended.

9. Use the tamping rod to keep the instrument seated as the auger string is retracted by sand line and chain.

10. Add another foot of 50-mesh sand and tamp with the rod.

11. Repeat step 10 until 2.5 ft of sand covers the silica flour.

12. Withdraw the HSA string completely from the boring.

B. Air Rotary Drilling

1. Install the soil water sampler in an open borehole after the drilling string is removed.

2. Terminate drilling at the desired depth of instrument installation.

3. Withdraw all drill pipe and bit from the borehole.

4. Add a 1-inch layer of slurry made of ground-up native soil or 200-mesh silica flour (mixed with only distilled water) to the bottom of the borehole. Record the amount of distilled water used in the preparation of the slurry.

5. Install the soil water sampler so that it rests directly on the ground-up native soil or silica flour.

6. Add a 2-inch to 4-inch layer of the ground-up native soil or silica flour to the hole, enveloping the ceramic tip of the instrument.

7. Add 1 ft of moist, 50-mesh quartz sand.

8. Gently tamp the sand with a 1-inch diameter rod or pipe; PVC pipe in 5-ft intervals with threaded couples is suggested.

9. Add another foot of 50-mesh quartz sand and tamp with the rod.

10. Repeat step 9 until 2.5 ft of sand covers the ground-up native soil or silica flour.

C. Final Installation

1. Have the soil water sampler checked by appropriate field personnel for proper operation before final installation.

2. Replace any instrument that fails to operate properly in the same borehole or in another borehole drilled next to the first.

3. Place a 5-inch bentonite seal above the sand. The bentonite seal will be composed of powdered bentonite. The bentonite seal is shown in Appendix 5.4.3.

4. At the field technician's discretion, the bentonite can be poured directly into the boreholes or poured through a tremie pipe. Ensure that the top of the bentonite seal is level by tamping with a tremie pipe.

5. After installing the bentonite seal, backfill the borehole to the ground surface. If the sampler is being installed at a site known to be uncontaminated, native soil previously removed from the hole may be used as backfill. If there is any possibility of introducing contaminated soil or tailings into the borehole, use clean, well-graded sand as backfill.

6. Proceed with backfilling to approximately 10 ft below the land surface. In holes less than 10 ft deep, reduce the amount of backfill as directed by the field personnel.

7. Backfill the remainder of the borehole with a bentonite/sand seal. The seal should consist of a mixture of 25% to 50% powdered or granular bentonite mixed with clean sand. Bentonite may be mixed with native soil only at uncontaminated sites.

8. As soon as practical after installation, have the field technician use the pressure-vacuum pump to extract the slurry water that was introduced with the silica flour and silica sand (as shown in Appendix 5.4.4). Continue purging until the same quantity of water that was used to prepare the slurry has been removed. Collect a soil moisture sample after the purging has been completed, as shown in Appendix 5.4.5.

9. Sink a PVC protective casing into the bentonite soil plug, surrounding the soil water sampler vacuum tubes.

10. The PVC casing should consist of schedule 80 pipe with a 6-inch diameter. The casing should extend approximately 2 ft into the plug and rise above the land surface about 1 ft. The top of the pipe should be filled with a slip-on PVC cap.

11. Protect the soil water sampler from possible damage by vehicular traffic or grazing livestock. Set wooden posts measuring 4 inches by 4 inches, at a 4-ft radius around each protective casing. Use at least 3 (but no more

than 4) posts to protect the casing. Set each post 2 ft below the ground surface and extend it at least 4 ft above the ground surface. Attach flagging to a post to visually mark the location. If livestock present a threat to the sampler, attach 3 strands of barbed wire to the posts. All posts may be cemented in place (optional).

3.3.4. Collecting Soil Water Samples

A vacuum applied within the soil water sampler causes moisture to move from the soil through the porous ceramic cup into the sample bottles. Because the rate at which a sample is collected is a function of the unsaturated hydraulic conductivity of the soil and the amount of vacuum that is created, the time required to collect a sample may vary. Generally, a vacuum of 50 to 80 centibars is sufficient to collect a sample in a few hours. However, under conditions of low conductivity or low moisture content in the soil, several days or weeks may be required to collect a sample. Because it is usually impossible to collect enough sample for a complete analysis, the order in which the constituents are analyzed must be prioritized.

1. NO_3 (only if more than 100 ml are collected; otherwise, analyze with third group)

2. U(1), Mo(2), As(3), Ba(4), Cd(5), Cr(6), and Pb(7)

3. SO_4(1), Cl(2), Ca(3), Na(4), Mg(5), and K(6)

4. Fe (1), Al(2), Mn(3), and SiO_2(4)

5. All others

   NOTE: Numbers in parentheses indicate the order of analysis within the group. The site manager may establish a different set of priorities for analysis.

A. Collecting samples

1. To collect a sample, close the pinch clamp on the discharge access tube and connect the vacuum port of the pressure-vacuum hand pump is to the pressure-vacuum access tube. The pump is then stroked until a vacuum of approximately 60 centibars is created with the sampler, as read out on the gauge connected to the pump (Appendix 5.4.4).

   NOTE: Samples collected may be hazardous. Wear disposable surgical gloves when collecting samples. Avoid splashing the liquid in eyes or on clothes. Additional decontamination precautions are outlined in SOP 1.6, General Equipment Decontamination; SOP 1.8, Personnel Decontamination--Level D Protection; SOP 1.9, Personnel Decontamination--Level C Protection; and SOP 1.10, Personnel Decontamination--Level B Protection.

2. Securely close the pinch clamp on the pressure-vacuum access tube to seal the sampler under vacuum. The hand pump can then be removed for other uses. Allow the sampler to set for a period of time under vacuum.

3. To recover a soil water sample, attach the pressure-vacuum access tube to the pressure port on the pump. Place the discharge access tube in a small, clean collection bottle and open both pinch clamps. Apply a few strokes on the hand pump to develop enough pressure within the sampler to force the collected water out of the sampler and into the collection bottle (as shown in Appendix 5.4.6). Refer to the RIP for additional instructions.

   NOTE: Whenever a sample is collected, a custody record must be initiated on the Custody Transfer Record/Lab Work Request form and a Water Sample Identification Label affixed to the sample container. SOP 1.3, Sample Control and Documentation, contains copies of the form and label and instructions for completing the form and label.

4. Collect subsequent samples by again creating a vacuum within the sampler and following the steps described above.

3.3.5. Sample Filtering/Preservation

A. Filtering

Before field measurements are taken, samples may need to be filtered. If more than 500 ml are available, a large filtering system may be used; otherwise, a syringe/filter system must be used. When applicable, follow the SOP 2.8, Sampling for Volatile Organics. Procedures specific to collecting soil water samples are described below.

1. Large filtering system

   a. Disassemble the filter apparatus and discard the old filter. Thoroughly rinse all surfaces that come in contact with the sample in distilled water.

   b. With clean hands, install a new filter, touching it only along its perimeter. Do not allow dirt or dust to blow onto the cleaned apparatus or filter. Reassemble the apparatus.

   c. Before taking any samples, run a few millileters of sample water through the filter.

   d. Fill the sample bottles. Do not allow dirt or dust to blow into bottles or bottle caps.

2. Syringe/filter system

   a. Fill the syringe with sample by drawing sample into the syringe with the plunger.

   b. Connect a new syringe filter to the base of the syringe and force sample through the filter into a clean sample bottle by depressing the syringe plunger.

   c. Repeat the above steps until all samples have been filtered.

   d. Discard the used syringe and filter.

B. Preservation

1. If there are less than 250 ml, acidify the sample. Add nitric acid (HNO_3) in sufficient volume to lower the pH of the sample to approximately 2.0. The pH of some soil water samples may be less than 2.0 without being acidified. If there are more than 250 ml, put the next 150 ml into a bottle unacidified. Consult the RIP and SOP 1.4, Sample Containers and Preservation, for further instructions.

2. Note the amount and type of preservative on data forms. Check the pH of the sample with pH paper to ensure that sufficient acid has been added. Once the appropriate acid has been added, seal sample bottles with electrical tape.

3.3.6. Obtaining Field Measurements

A. Record all field measurements and comments on the Soil Water Sampling Field Data form (Appendix 5.2). Fill out the form as described in Appendix 5.3.

B. After the samples have been collected, measure and record pH, specific conductance, Eh, temperature, alkalinity, and dissolved oxygen using the instructions provided in SOP 2.2, Field Measurements of Ground and Surface Water Samples. The field measurements will be recorded directly onto the Soil Water Sampling Field Data form.

NOTE: Because some sample loss will occur during testing, take measurements only if 500 ml or more are collected. Do not measure field unless at least 700 ml are collected. Do not perform alkalinity tests unless the pH of a sample is greater than 4.5. Guard against cross-contamination.

C. After completing the field measurements, record the number of sample containers collected in the middle of the Soil Water Sampling Field Data form. Describe sample collection by volume (1 liter, 500 ml, 250 ml, or other specified volume) and by preservation method (nonacidified or acidified), and add the respective amount of acid (in milliliters) to each acidified container for sample preservation requirements.

3.4. Postoperation

3.4.1. Field

A. Ensure that all equipment is accounted for, decontaminated (see SOP 1.6, General Equipment Decontamination), and ready for shipment.

B. Restore the site to presampling conditions as specified in the RIP.

C. Make sure all soil water sampling locations are properly staked and the location ID is readily visible on the location stake.

D. Prepare samples and transport according to SOP 1.3, Sample Control and Documentation; SOP 1.4, Sample Containers and Preservation; and SOP 1.5, Guide to Handling, Packaging, and Shipping of Samples.

3.4.2. Documentation

A. Record cleanup and hole abandonment procedures and any uncompleted work (like site restoration or long-term monitoring) in the logbook.

B. Complete logbook entries, verify the accuracy of entries, and sign/initial all pages.

C. Review data collection forms for completeness.

3.4.3. Office

A. Deliver original forms and logbooks to the site manager for technical review. He/she will review, sign forms, and transmit to the document control officer (copies to the files) for eventual delivery to the Department of Energy.

B. Inventory equipment and supplies. Repair or replace all broken or damaged equipment. Replace expendable items. Return equipment to the equipment manager and report incidents of malfunction or damage.

C. Contact the analytical laboratory to ensure that samples arrived safely and instructions for sample analyses are clearly understood.

4. SOURCES

Allmaras, R. R. 1965. "Methods of Soil Analysis." Agronomy Monograph No. 9, pt. 1: 24-42. Madison, Wisconsin: Am. Soc. Agronomy.

Krumbein, W. C. and F. A. Graybill. 1965. An Introduction to Statistical Models in Geology, 171-181. New York: McGraw-Hill Book Company.

5. APPENDIXES

5.1. Equipment and Supplies Checklist

5.2. Soil Water Sampling Field Data Form

5.3. Data Form Completion

5.4. Diagrams for Installation/Operation of Soil Water Samplers

5.4.1. Component Parts of a Soil Water Sampler

5.4.2. Soil Water Sampler Installation

5.4.3. Soil Water Sampler Installation Showing Bentonite Seal

5.4.4. Soil Water Sampler Installation Showing Pressure-Vacuum Assembly

5.4.5. Purging of Slurry Water with Soil Water Sampler

5.5.6. Collection of Soil Water Samples

APPENDIX 5.1

EQUIPMENT AND SUPPLIES CHECKLIST

_____ Porous ceramic cup(s)

_____ Body tube

_____ Nail or similar object

_____ Neoprene plug

_____ Clamp ring

_____ 1/4-inch-diameter polythyene tubing

_____ Vacuum pump

_____ Pinch clamps

_____ 4-inch auger

_____ 3/16-inch I.D. x 1/8-inch wall neoprene tubing

_____ Tamping rod

_____ Distilled water

_____ Vacuum grease

_____ Bentonite pellets

_____ Two-inch-long, 3/16-inch-diameter wooden dowels

_____ Fence posts

_____ Barbed wire

_____ pH paper

_____ Sample containers and preservatives

_____ pH meter

_____ Alkalinity test kit

_____ Thermometer

APPENDIX 5.1, continued

EQUIPMENT AND SUPPLIES CHECKLIST

_____ Kim wipes

_____ Filter assembly

_____ .45-micron filters

_____ Nitric acid (HNO_3)

_____ Plastic sheet

_____ Any additional supplies listed in associated procedures, as needed.

APPENDIX 5.2

SOIL WATER SAMPLING FIELD DATA FORM

SOIL WATER SAMPLING FIELD DATA

FACILITY CODE _____

LOCATION ID _____

SAMPLE ID _____

SAMPLE DEPTH (FT) _____

SAMPLING DATE _____

SAMPLING TIME _____

VOLUME SAMPLE COLLECTED (ml) _____

VACUUM APPLIED _____

ACCEPTANCE CODE _____

FINAL FIELD VALUES:

pH (S.U.) _____

Ec (umhos/cm) _____

Eh (mvolts) _____

TEMP (°C) _____

ALKANLINITY (mg/l $CaCO_3$) _____

DISSOLVED OXYGEN (mg/l) _____

LOCATION DESCRIPTION _____

	CONTAINER SIZE	NONACIDIFIED	ACIDIFIED	VOL ACID (ml)
NUMBER OF	ONE-LITER			
CONTAINERS	500 ml			
COLLECTED:	250 ml			
SPECIFY OTHERS:				

COMMENTS: _____

FIELD REPRESENTATIVE: _____

ACCEPTANCE CODES: A-ACCEPTABLE R-RECONNAISSANCE U-UNACCEPTABLE N-NOT DETERMINED

COMPLETE BOLDED DATA FOR ENTRY INTO TIMS

5910-038 (1/88)

FORM COMPLETED BY/DATE _____

TECHNICAL REVIEWER/DATE _____

APPENDIX 5.3

DATA FORM COMPLETION

Use a pen with black ink that is not water soluble (not a felt-tip pen). Make an entry in each blank. Where there is no data entry, enter UNK for Unknown, NA for Not Applicable, or ND for Not Done. If any procedure was not performed as prescribed, give the reason for the change or omission on the form. To change an entry, draw a single line through it, add the correct information above it, and initial the change.

SOIL WATER SAMPLING FIELD DATA FORM

1. Facility Code. Five-character code abbreviating the facility name where program activity is being conducted. The first three characters indicate the facility, and the remaining two numbers designate the specific site within the facility.

2. Location ID. Four-character code assigned sequentially to each borehole, test pit, or surface location where chemical, biological, radiological, and other measurements are taken.

3. Sample ID. Four-digit number assigned to ensure that data collected retains uniqueness from other data collected at the same location ID.

4. Sample Depth. The interval (below land surface) in feet and tenths of feet at which a soil water sampler will be installed.

5. Sampling Date. The date when soil water was sampled in the format DD-MMM-YY (01-JAN-88).

6. Sampling Time. The time that the sample was taken, using the 24-hr clock in format hours and minutes.

7. Volume Sample Collected (ml). The amount of sample collected recorded in milliliters.

8. Vacuum Applied. The vacuum applied to the soil water sampler to collect a sample. Recorded in centibars and read from the gauge on portable hand pump used to apply vacuum on soil water sampler.

9. Acceptance Code. One-character code assigned by the installation manager.

10. Potential of Hydrogen. The pH of the water sample in S.U. units at the time of collection.

11. Specific Conductance. The specific conductance of the water sample in micromhos/cm (mhos/cm) at the time of collection.

12. Redox Potential. The redox potential of the water sample in millivolts (mV) at the time of collection.

13. Temperature. The temperature of the water sample in degrees celsium (°C) at the time of collection.

14. Alkalinity ($CaCo_3$). The alkalinity of the water sample in milligrams per liter (mg/*l*) at the time of collection.

15. Dissolved Oxygen. The dissolved oxygen content of the water sample in milligrams per liter (mg/*l*) at the time of collection.

16. Location Description. Approximate location of soil water sampler with respect to some known geographic location.

17. Nonacidified. Number of sample containers filled using the specified field preparation method.

18. Acidified. Number of sample containers filled using the specified field preparation method.

19. Vol Acid (ml). Volume of acid in units of ml.

20. Specify Others. Any other types of sample containers filled.

21. Comments. Any additional information.

22. Field Representative. The name of the field representative.

APPENDIX 5.4

DIAGRAMS FOR INSTALLATION/OPERATION OF SOIL WATER SAMPLERS

APPENDIX 5.4.1

COMPONENT PARTS OF A SOIL WATER SAMPLER

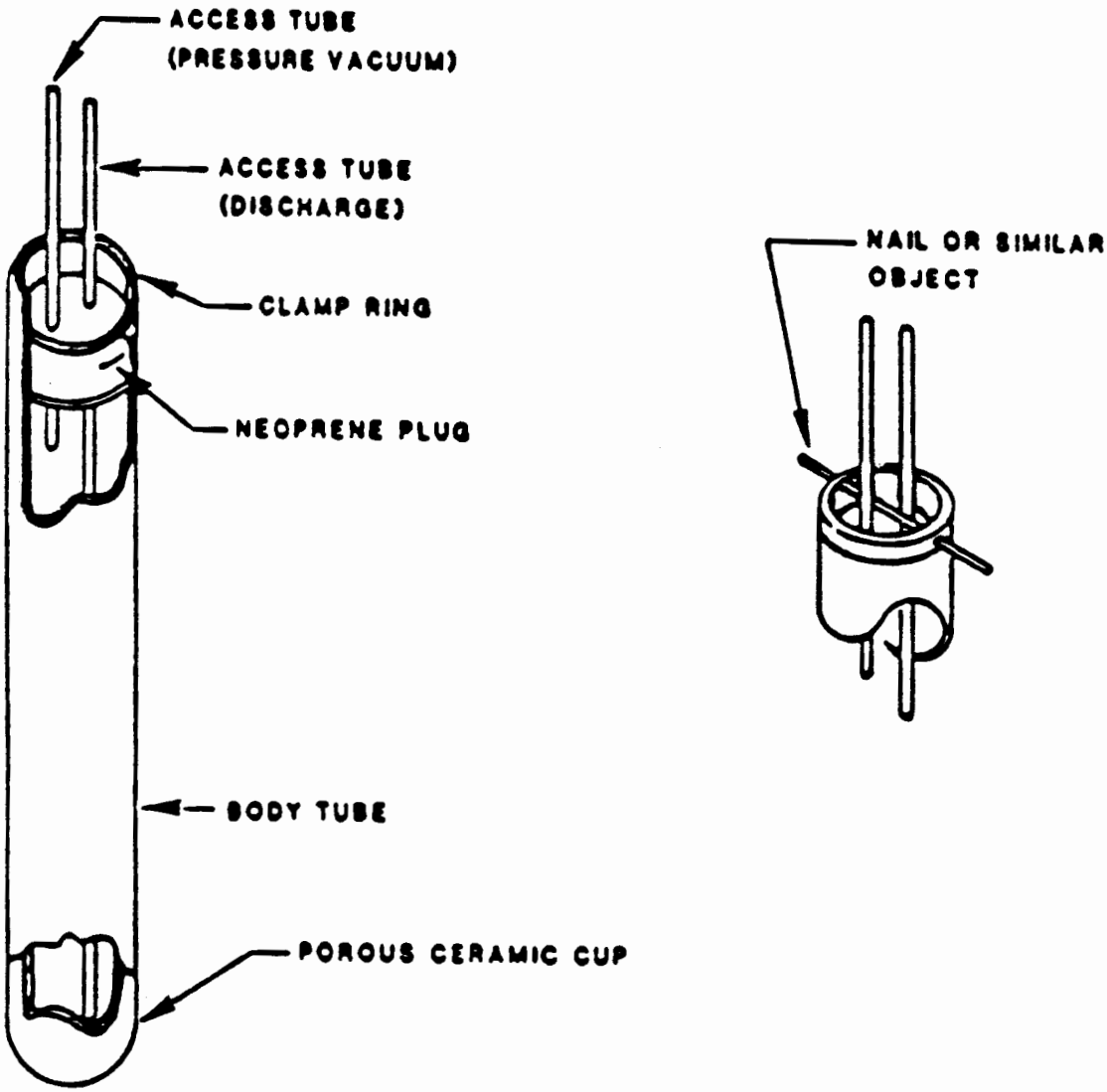

APPENDIX 5.4.2

SOIL WATER SAMPLER INSTALLATION

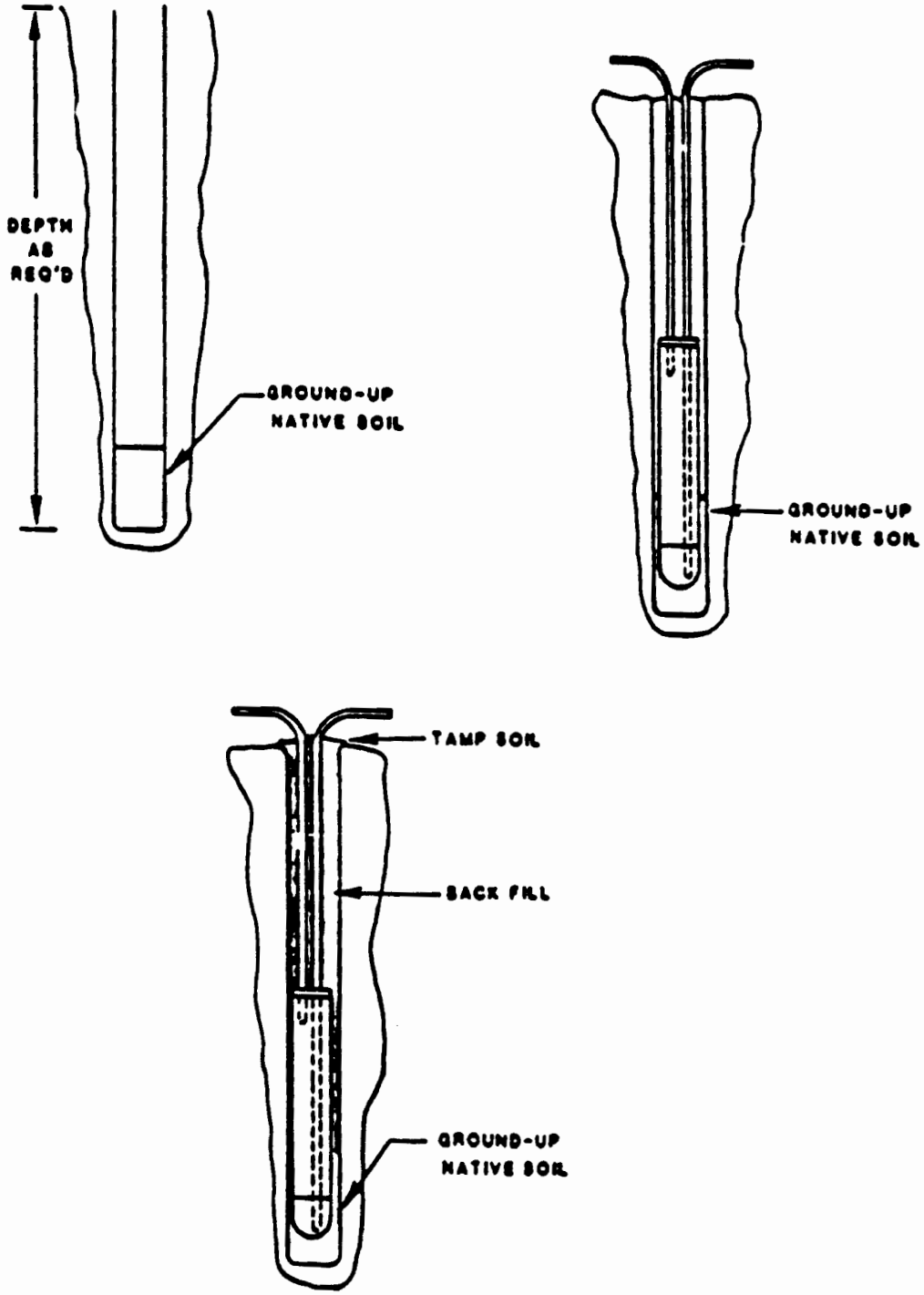

APPENDIX 5.4.3

SOIL WATER SAMPLER INSTALLATION SHOWING BENTONITE SEAL

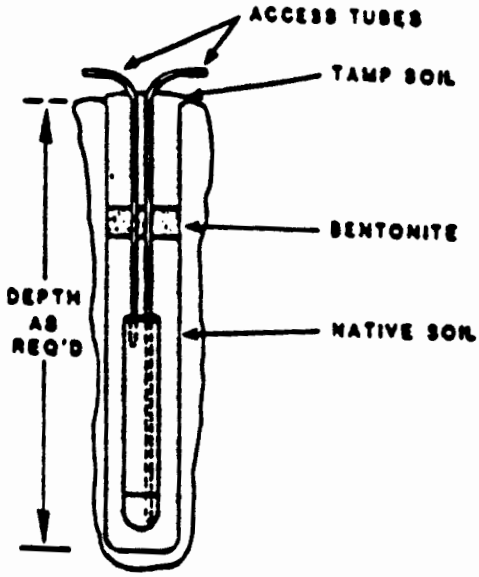

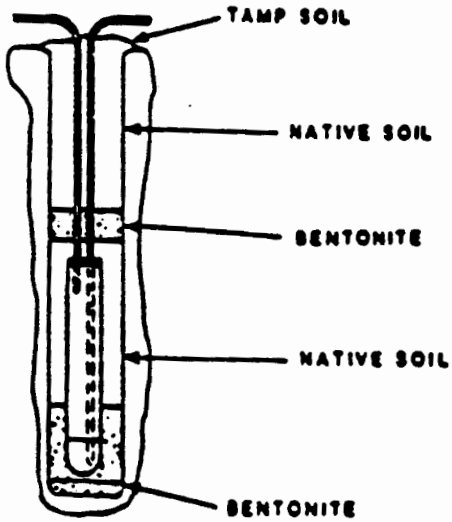

APPENDIX 5.4.4

SOIL WATER SAMPLER INSTALLATION SHOWING
PRESSURE-VACUUM ASSEMBLY

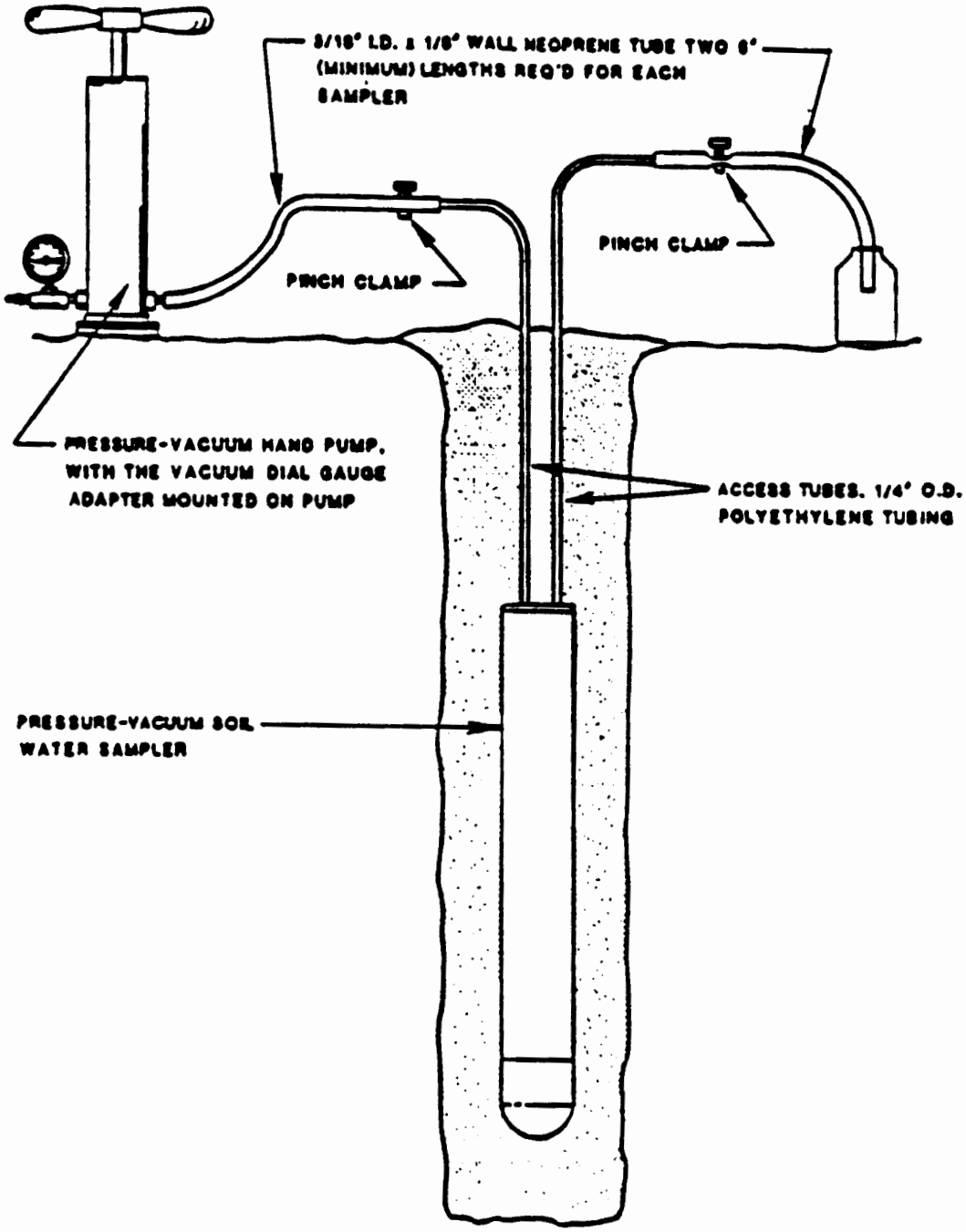

APPENDIX 5.4.5

PURGING OF SLURRY WATER WITH SOIL WATER SAMPLER

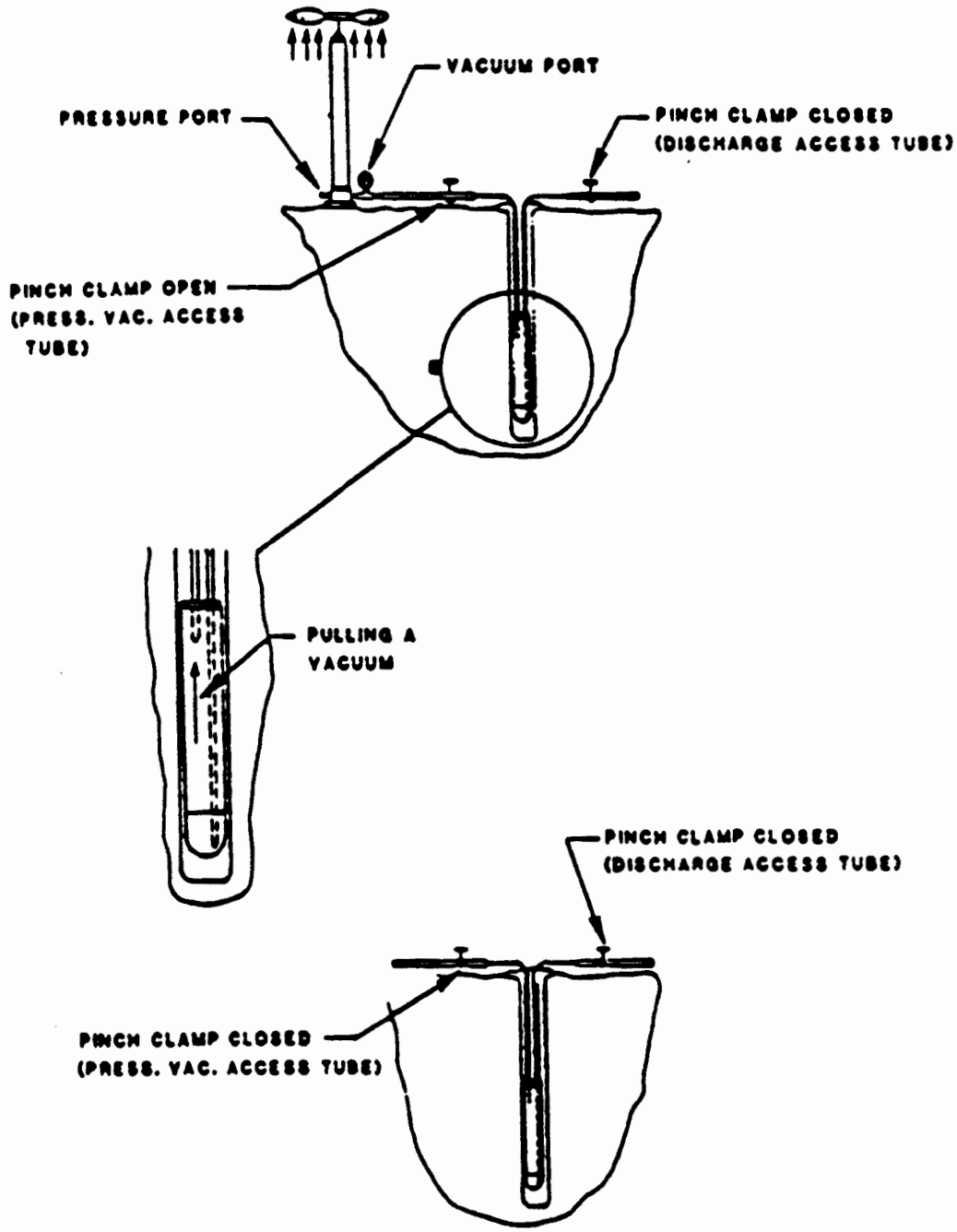

APPENDIX 5.4.6

COLLECTION OF SOIL WATER SAMPLES

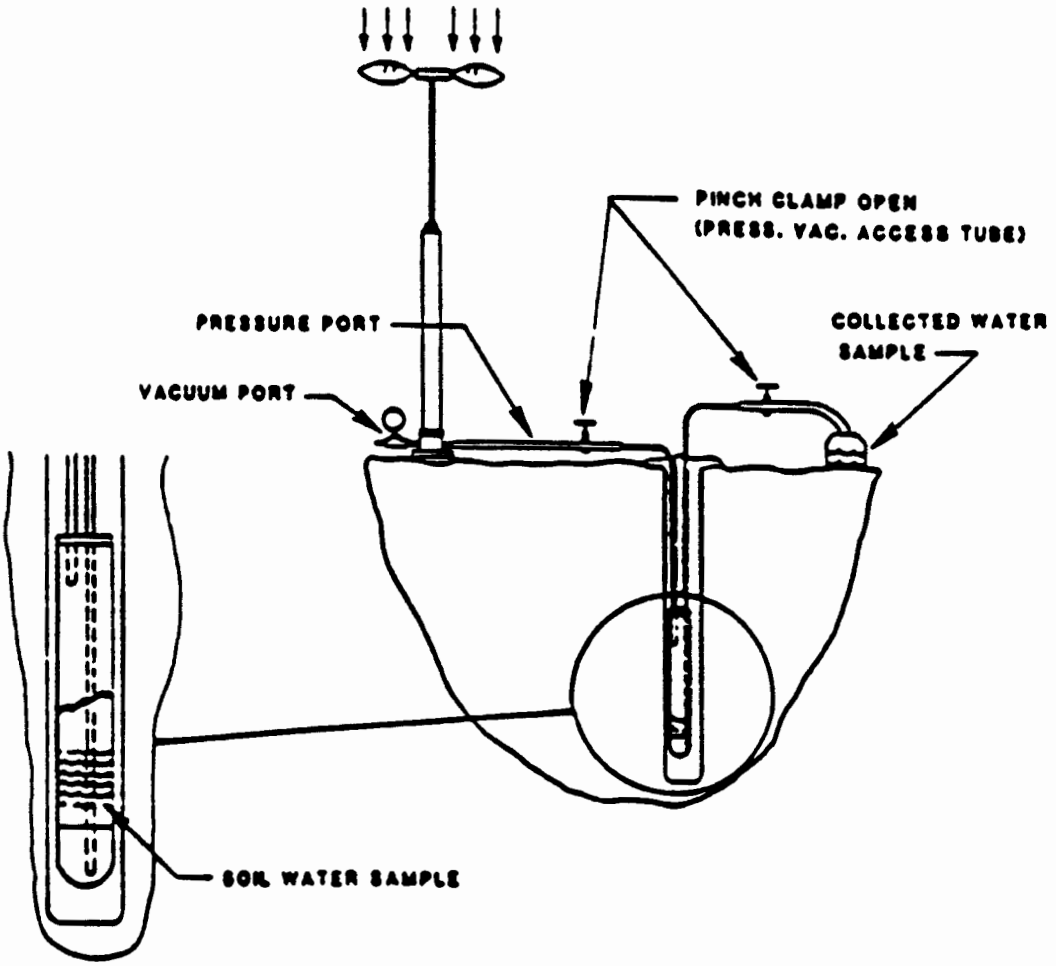

STANDARD OPERATING PROCEDURE 5.6

INSTALLATION/OPERATION OF SOIL SUCTION MONITORS

1. PURPOSE

To define a method of placement, installation, and operation of soil suction monitors (tensiometers) for measurement of soil moisture potential.

2. DISCUSSION

The Remedial Investigation Plan (RIP) contains specific details about the procedures and equipment for this SOP. Refer to the RIP for the type of samples to be collected. Collection and measurement of samples and the documentation of data will be performed as described in the associated procedures.

The tensiometer (also known as capillary potentiometer, soil hygrometer, or soil moisture meter) is an instrument that provides a direct measurement of the negative pressure potential or suction in a soil. Tensiometers are used when it is necessary to measure the gradient in pressure potential in order to determine the direction and rate of water movement in a soil profile.

The tensiometer measures the matric potential (capillary potential) of a soil for suction values between 0.1 and 1 bar. The measured matric potential can be used with soil moisture content data to construct a soil moisture characteristic curve for vadose-zone characterization and modeling.

Under ideal tensiometric conditions, equilibrium between the liquid in the tensiometer and soil is achieved. This produces a vacuum that is recorded from the vacuum gauge of the tensiometer. As the soil pore water content increases, this vacuum is reduced by the influx of water into the tensiometer. A saturated soil will theoretically record a zero value.

A specific discussion of tensiometer locations, installation depths, sampling methods, and other details concerning the deployment of tensiometers at installation sites is contained in the RIP.

3. PROCEDURES

3.1. Associated Procedures

Before every operation, a review of the SOPs 1.1-1.10 is necessary. These SOPs contain information on the performance of field activities. They should be consulted for specific information about equipment and supplies; sample collection, preservation, packaging, and shipping; decontamination procedures; and documentation requirements. Procedures directly associated with this SOP are listed below.

SOP No.	SOP Title
1.1	General Instructions for Field Personnel

SOP No.	SOP Title
1.3	Sample Control and Documentation
1.6	General Equipment Decontamination

3.2. Preparations

3.2.1. Office

A. Review the RIP and SOPs listed in Section 3.1.

B. Coordinate schedules/actions with the installation staff.

C. Obtain approprite permission for property access.

D. Assemble the equipment and supplies listed in Appendix 5.1. Ensure the proper operation of all sampling equipment.

E. Pack tensiometers so that dial gauges and ceramic tips are not damaged during shipment to the site. Wrap individual tensiometer pieces separately in paper and package the tensiometers securely inside the shipping boxes. Prevent ceramic tips from contacting grease or similar material that would clog the pores. Label all boxes with proper shipping and return addresses.

3.2.2. Documentation

A. Obtain a logbook from the QA officer.

B. Record results of the equipment check in the logbook.

C. Obtain a sufficient number of the appropriate ER Program data collection forms (see INDEX TO SOPs).

D. Consult the ER Program data administrator for a current list of information management codes, location IDs, and sample numbers used in the completion of data forms.

3.2.3. Field

A. Check tensiometers to ensure that no damage has resulted from shipping.

B. Decontaminate all installation equipment according to SOP 1.6, General Equipment Decontamination.

3.3. Operation

A. Whenever a soil suction value is determined, record all data describing the location, installation, and the measurement on the Tensiometer Sampling Field Data form (Appendix 5.2). Fill out the form as described in Appendix 5.3.

B. Tensiometer assembly

The component parts of a tensiometer are shown in Appendix 5.4.1. To assemble the tensiometers, follow the steps below.

1. Before assembling the tensiometer, make sure all parts are clean and have not been damaged in shipping. Do not use any damaged equipment.

2. Screw the vacuum dial gauge into the threaded port in the side of the body tube until the backup washer on the stem body touches the body tube. Do <u>not</u> overtighten the dial gauge in the body tube; the O ring on the stem ensures a tight vacuum seal.

3. Screw the ceramic tip into the body tube to the desired length.

4. Before putting the tensiometer to use, vent the dial gauge by momentarily removing the vent screw in the center of the dial gauge cover. This will adjust the dial gauge to local conditions; the gauges are usually set at sea level atmospheric conditions.

C. Filling the tensiometers

1. Use distilled water to fill the tensiometers. Allow the tensiometer body tube to remain in a vertical position until fluid completely saturates the ceramic tip and drips from the end of the tip for about five min.

2. Once the tip is saturated, fill the tube completely with distilled water and pull a vacuum within the top of the tensiometer using the vacuum hand pump (Appendix 5.4.2). If the hand pump is not available, air can be adequately removed from the tensiometer by pushing the reservoir button down repeatedly (Appendix 5.4.1) after the tensiometer and reservoir have been filled.

3. Screw the fill reservoir cap into the top of the tube body.

4. Peel the neoprene reservoir cover back and fill the reservoir approximately 75% full. Replace the neoprene cover back over the fill reservoir cap and push the reservoir button (Appendix 5.4.1) down several times to remove air from the reservoir pump cylinder and any accumulated air in the tensiometer.

5. Repeat the vacuum/pumping operation four or five times until there are no further air bubbles from the stem of the vacuum gauge.

6. Because commercial gauge-type tensiometers generally are not corrected for the length of the tensiometer, adjust the dial on the vacuum gauge to zero (Appendix 5.4.2) when the tip of the tensiometer is immersed in water.

7. If the tensiometer will not be installed immediately, store it with the ceramic tips immersed in distilled water or covered with a plastic bag to prevent evaporation.

D. Tensiometer installation

1. In soft, friable soils, the shorter tensiometers may be pushed directly into the ground.

2. In firm soils, a hole should be cored in the soil to accept the tensiometer. The hole must be the right size to ensure a snug fit between the ceramic tip and the soil. An insertion tool or a length of standard 1/2-inch water pipe may be driven into the soil to create the hole.

3. In rocky soils, a 4-inch soil auger can be used to produce a tensiometer hole. Pass the removed soil through a 1/4-inch screen to remove large pebbles and rocks. Replace the screened soil as close to its original position as possible.

4. For deep installations or installations in rocky soils, produce a slurry of water and clean silica flour and pour it into the bottom of the hole. Push the ceramic tip into the slurry to assure good contact in the soil.

5. Tamp the soil around the tensiometer into place to guard against water channeling down the hole. The soil around the tensiometer should not be compacted tightly during installation.

6. After installation, several hours may be required before the tensiometer reads the correct soil suction value. Additional time may be required when a slurry is used. The correct value will be known when the water in the ceramic tip has come into equilibrium with the soil solution and the vacuum gauge reads a constant value. Correct readings will be reached more quickly in moist soils than in dry soils.

7. Install surface casing and locking caps to protect the tensiometers.

E. Gauge calibration

The tensiometer suction pressures are measured using a Bourdon tube gauge. These gauges are calibrated by the manufacturer. Zero adjustment of the gauges may be rechecked after they are taken out of the soil (before the onset of freezing conditions) by placing the ceramic tip in distilled water. The gauge should read zero.

Check, recalibrate, or replace tensiometers under the circumstances listed below.

1. When it is known that the tensiometer has been subject to subfreezing conditions

2. There is evidence of physical damage to the gauge

F. Field Measurements

Most tensiometers have a dial-type manometer to indicate the pressure potential. Their scale is given in centibars, from 0 to -100. Therefore, -50 centibars equals -0.5 bar, which is equivalent to a pressure potential of -500 cm water. Record tensiometer pressure potentials on the Tensiometer Sampling Field Data form (Appendix 5.2).

3.4. Postoperation

3.4.1. Field

A. Ensure that all equipment is accounted for, decontaminated (see SOP 1.6, General Equipment Decontamination), and ready for shipment.

B. Restore the site to presampling conditions and fill open sampling holes as specified in the RIP.

C. Make sure all sampling locations are properly staked and the location ID is readily visible on the location stake.

D. Before the onset of freezing conditions, remove tensiometers from each site. Unscrew the jet-fill reservoir cap and vacuum dial gauge, clean, and store above freezing conditions. Leave the ceramic tip and body tube in place; they can be used during the next season. Place a plastic cover over the opening of the body tube; leave the PVC casing and cap in place.

3.4.2. Documentation

A. Record cleanup and hole abandonment procedures and any uncompleted work (like site restoration or long-term monitoring) in the logbook.

B. Complete logbook entries, verify the accuracy of entries, and sign/initial all pages.

C. Review data collection forms for completeness.

3.4.3. Office

A. Deliver original forms and logbooks to the site manager for technical review. He/she will review, sign forms, and transmit to the document control officer (copies to the files) for eventual delivery to the Department of Energy.

B. Inventory equipment and supplies. Repair or replace all broken or damaged equipment. Replace expendable items. Return equipment to the equipment manager and report incidents of malfunction or damage.

C. Together with the site manager, interpret initial soil suction data to determine if additional tensiometers need to be installed or if the measurement frequency needs to be adjusted to adequately characterize the soil moisture regime.

D. If necessary, send the gauges to the factory for recalibration.

4. SOURCES

Allmaras, R. R. 1965. "Bias," 24-42. In Methods of Soil Analysis, Agronomy Monograph No. 9, pt. 1. Madison, Wisconsin: Am. Soc. Agronomy.

Bouyoucos, G. J. and A. H. Mick. 1940. "An electrical resistance method for the continuous measurement of soil moisture under field conditions," 172. Michigan Agr. Exp. Sta. Tech. Bull, Ann Arbor, Michigan.

Bower, H. 1961. "A Double Tube Method for Measuring Hydraulic Conductivity of Soil In-situ Above a Water Table." Soil Sci. Soc. Amer. Proc. 25: 334-39.

Davidson, J. M., D. R. Nielsen, and J. W. Biggar. 1963. "The Measurement and Description of Water Flow Through Columbia Silt Loam and Hesperia Sandy Loam." Hilgardia 34: 607-17.

Hillel, D. 1971. Soil and Water Physical Principles and Processes. New York: Academic Press.

Kirkham, D. and W. L. Powers. 1972. Advanced Soil Physics. New York: Wiley-Interscience.

Kdohnke, G. 1968. Soil Physics. New York: McGraw-Hill Book Company.

Krumbein, W. C. and F. A. Graybill. 1965. An Introduction to Statistical Models in Geology, 171-81. New York: McGraw-Hill Book Company.

Morrison, Robert D. 1983. Groundwater Monitoring Technology, Procedures, Equipment and Applications, 1-7. Prairie Dosac, Wisconsin: TIMCO MFG., Inc.

5. APPENDIXES

5.1. Equipment and Supplies Checklist

5.2. Tensiometer Sampling Field Data Form

5.3. Data Form Completion

5.4. Diagrams for Installation/Operation of Tensiometers

5.4.1. Component Parts of a Tensiometer

5.4.2. Filling the Tensiometer Tube by Inducing Vacuum

5.4.3. Removing Air from the Tensiometer

5.4.4. Adjusting the Vacuum Gauge Dial

APPENDIX 5.1

EQUIPMENT AND SUPPLIES CHECKLIST

_____ Location Identification

Date: _____

Name: _____

_____ Tensiometer tubes:

Length:	Quantity:
6 inches	_____
12 inches	_____
18 inches	_____
24 inches	_____
30 inches	_____
36 inches	_____
42 inches	_____
48 inches	_____
60 inches	_____
Other:	_____

_____ Vacuum dial gauges:

Quantity: _____ Condition: _____

_____ Ceramic tips:

Quantity: _____ Condition: _____

_____ Reservoir fill caps:

Quantity: _____ Condition: _____

_____ Installation equipment:

4-inch soil auger: _____

Insertion tool: _____

1/4-inch soil screen: _____

Vacuum hand pump: _____

Other: _____

_____ Distilled water

Quantity: _____

APPENDIX 5.2

TENSIOMETER SAMPLING FIELD DATA FORM

TENSIOMETER SAMPLING FIELD DATA

FACILITY CODE _____ LOG DATE _____

LOGGER CODE _____ ACCEPTANCE CODE _____

LOCATION ID OR DESCRIPTION	SAMPLE ID	DEPTH INTERVAL (FT)	PRESSURE POTENTIAL (CENTIBARS)	COMMENTS

COMMENTS _____

ACCEPTANCE CODES: A—ACCEPTABLE R—RECONNAISSANCE U—UNACCEPTABLE N—NOT DETERMINED

COMPLETE BOLDED DATA FOR ENTRY INTO TMS

TDI-041 (1/88) FORM COMPLETED BY/DATE _____ TECHNICAL REVIEWER/DATE _____

APPENDIX 5.3

DATA FORM COMPLETION

Use a pen with black ink that is not water soluble (not a felt-tip pen). Make an entry in each blank. Where there is no data entry, enter UNK for Unknown, NA for Not Applicable, or ND for Not Done. If any procedure was not performed as prescribed, give the reason for the change or omission on the form. To change an entry, draw a single line through it, add the correct information above it, and initial the change.

TENSIOMETER SAMPLING FIELD DATA FORM

1. Facility Code. Five-character code abbreviating the facility name where program activity is being conducted. The first three characters indicate the facility, and the remaining two numbers designate the specific site within the facility.

2. Log Date. The date the information recorded on the form was obtained in the format DD-MMM-YY (01-JAN-88).

3. Logger Code. Three-character or four-character code identifying the company responsible for collecting the information recorded on the form.

4. Acceptance Code. One-character code assigned by the site manager.

5. Location ID or Description. The identifying code or number assigned to the sample location or a description of background locations that are outside the survey area.

6. Sample ID. Four-digit numbers assigned to ensure that data collected retains uniqueness from other data collected at the same location ID.

7. Depth Interval (Ft). The depth from which the soil suction measurement was taken. The depth interval is measured in feet and tenths of feet from the land surface.

8. Pressure Potential (Centibars). The expression of the pressure potential relative to atmospheric pressure. The value for this data field is read directly from the gauge.

9. Comments. Observations or information concerning the measurement of soil suction at a specific location.

10. Comments. Any additional information.

APPENDIX 5.4

DIAGRAMS FOR INSTALLATION/OPERATION OF TENSIOMETERS

APPENDIX 5.4.1

COMPONENTS OF A TENSIOMETER

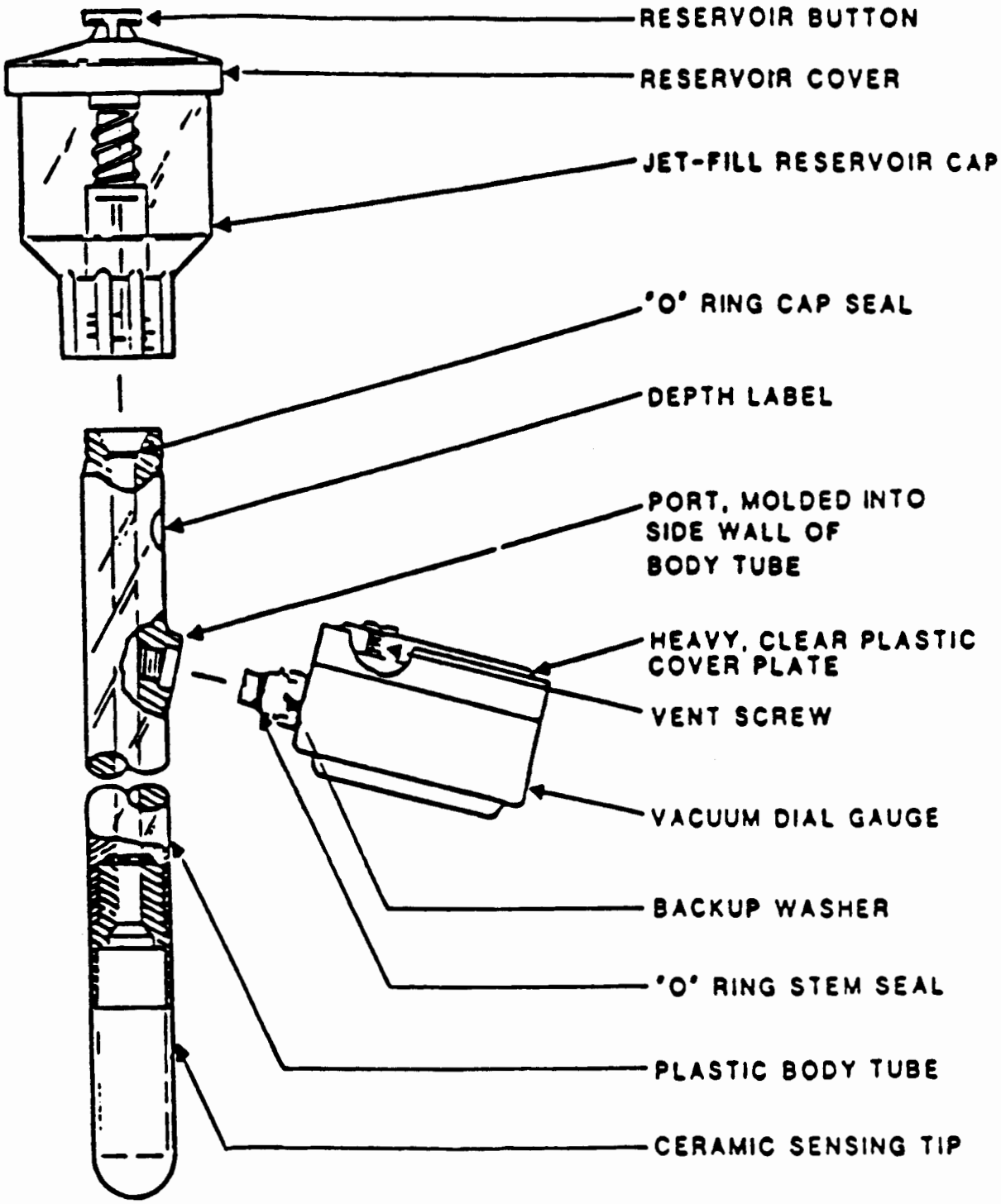

APPENDIX 5.4.2

FILLING THE TENSIOMETER TUBE BY INDUCING VACUUM

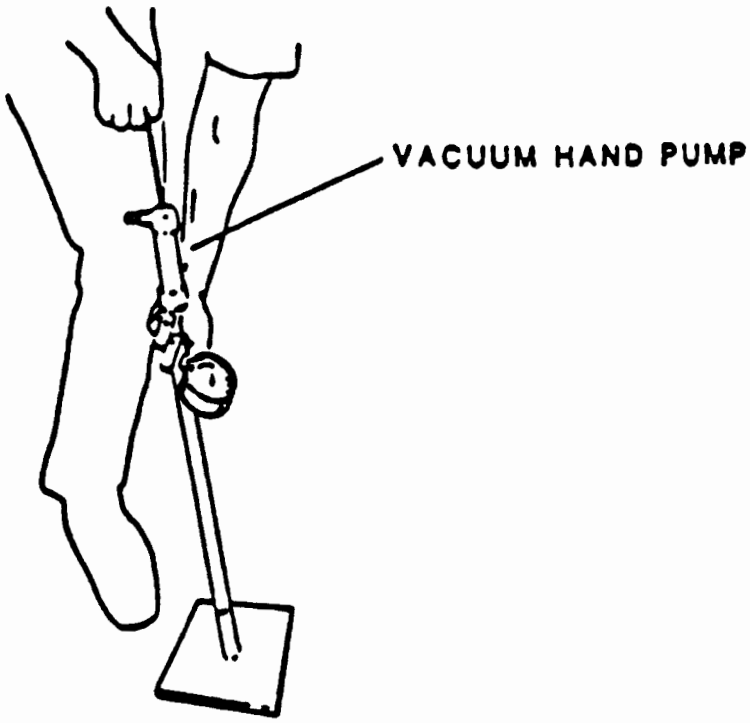

APPENDIX 5.4.3

REMOVING AIR FROM THE TENSIOMETER

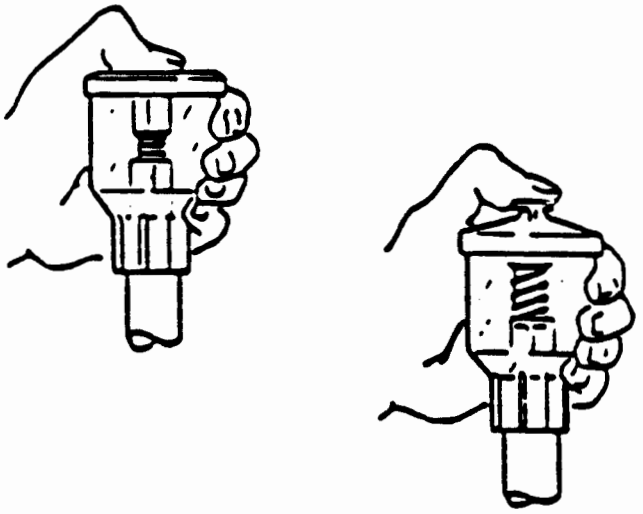

APPENDIX 5.4.4

ADJUSTING THE VACUUM GAUGE DIAL

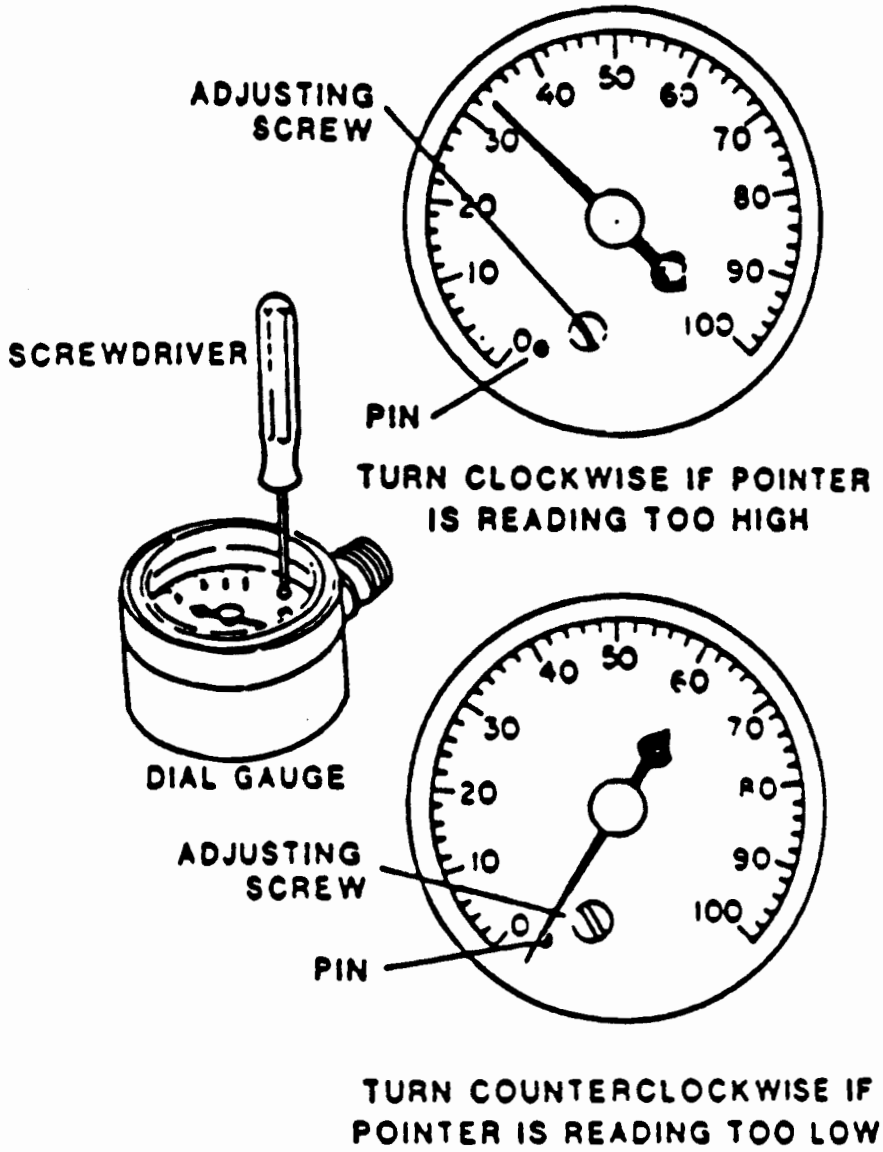

STANDARD OPERATING PROCEDURE 5.7

INSTALLATION/OPERATION OF SOIL MOISTURE MONITORS

1. PURPOSE

To define procedures for installing and operating soil moisture monitors.

2. DISCUSSION

The Remedial Investigation Plan (RIP) contains specific details about the procedures and equipment for this SOP. Refer to the RIP for the type of measurements to be collected and the duration of the monitoring program.

Soil moisture monitors are instruments that measure the moisture content in soils. Soil moisture (water) content is expressed as the ratio of the water in a sample to the total volume of the sample. Soil moisture will be measured either by soil moisture blocks (electromagnetic) or neutron probe (nuclear) techniques. Field personnel should be aware of the site-specific conditions that can affect the proper operation of the instruments.

A. Soil moisture Block Methods

Soil moisture block techniques rely upon the effect that moisture has on a soil's electrical properties (Morrison 1983). Soil moisture blocks are sensors that measure soil moisture as a function of the resistance between two electrodes embedded in a porous material. The blocks are typically manufactured from gypsum and are relatively inexpensive because of the low cost of the sensors. The ability of the sensors to record measurements from many units within a wide area is another advantage. Problems include sensitivity to changes in temperature effects, the use of moisture blocks at low moisture levels, proper soil contact, changes in salt concentration, disruption of the adjacent soil caused during installation, limited operational ranges of sensors, sensor integrity, and calibration.

B. Neutron Probe Methods

Neutron scattering is a single-probe, borehole logging technique in which neutrons are emitted from a radioactive source to collide with hydrogen atoms in the soil water. The hydrogen count is then correlated with the water content for soil moisture determination. Because it utilizes a radioactive source, a neutron probe must be operated by a Nuclear Regulatory Commission licensee. Neutron scattering provides a rapid method of obtaining soil readings that are largely independent of pressure and temperature. Disadvantages include measurement bias from certain hydrogen-rich minerals in the soil, neutron adsorption in the soil, difficulty in the installation of the access tubes, and the disruption of the adjacent soil caused during installation.

If the manufacturer's calibrations are used, the specified type, thickness, and diameter of casing must be used in the borehole. The neutron technique is an integrating technique and does not define sharp interface conditions.

3. PROCEDURES

3.1. Associated Procedures

Before every operation, a review of the SOPs 1.1-1.10 is necessary. These SOPs contain information on the performance of field activities. They should be consulted for specific information about equipment and supplies; sample collection, preservation, packaging, and shipping; decontamination procedures; and documentation requirements. Procedures directly associated with this SOP are listed below.

SOP No.	SOP Title
1.1	General Instructions for Field Personnel
1.6	General Equipment Decontamination
4.1	Soil Boring

3.2. Preparation

3.2.1. Office

A. Review the RIP and SOPs listed in Section 3.1.

B. Coordinate schedules/actions with the installation staff.

C. Obtain appropriate permission for property access.

D. Assemble the equipment and supplies listed in Appendix 5.1. Ensure the proper operation of all sampling equipment.

E. Order soil moisture monitor supplies at least one month before field work is scheduled to begin.

F. Pack soil moisture monitors carefully so that the equipment is not damaged during shipment.

G. Ship equipment to the site using labels with appropriate shipping and return addresses.

3.2.2. Documentation

A. Obtain a logbook from the QA officer.

B. Record results of the equipment check in the logbook.

C. Obtain a sufficient number of the appropriate ER Program data collection forms (see INDEX TO SOPs).

D. Consult the ER Program data administrator for a current list of information management codes, location IDs, and sample numbers used in the completion of data forms.

E. Record field conditions, unusual circumstances, and weather in the logbook.

3.2.3. Field

A. Decontaminate all installation equipment according to SOP 1.6, General Equipment Decontamination.

B. Check soil moisture monitor supplies to ensure that no damage has resulted from shipping.

3.3. Operation

Soil moisture measurements will be recorded on the Soil Moisture Measurements form (Appendix 5.2). Fill out the form as described in Appendix 5.3.

A. Soil moisture Blocks

The basic elements of the moisture block are two electrodes and a matrix that encapsulates the electrodes (Appendix 5.4).

1. If necessary, assemble the moisture block as specified in the RIP.

2. Calibrate the moisture block according to the manufacturer's instructions.

   NOTE: Use the same moisture meter for calibration and all field readings.

3. Saturate moisture blocks with distilled water before installation in the borehole or sidewall.

4. Excavate a hole (approximate dimensions of moisture block) in a trench sidewall or borehole. Separate and collect soil on Teflon or plastic sheets at appropriate intervals to be used later in backfilling the hole.

5. For placement, pour 200-mesh sand into the bottom of the hole.

6. Install the block and backfill with excavated soil in the order in which it was removed. Top off soil in the hole to the next installation or the ground surface.

7. Measure moisture content (resistance) in the block through a moisture bridge using an alternating current meter.

   NOTE: Do not record the measurement for at least 24 hrs after installation to allow for sensor equilibrium with the soil. Once the lead wires are connected to the meter terminals, 1 or 2 min are recommended for unit stabilization before recording resistance values. Take subsequent and repeat measurements to ensure the validity of data.

B. Neutron Probes

Different field application techniques are used with surface probes or depth probes.

1. Surface Probes

   a. If necessary, assemble the probes.

   b. Calibrate the individual probes as specified by the manufacturer's instructions.

   c. Place surface the probes on the ground in locations specified in the RIP.

2. Depth Probe

   a. Assemble and calibrate the probes as specified by the manufacturer's instructions.

   b. Construct aluminum access tubes as specified in the RIP.

   c. Auger the hole with a hand auger or drill-rig auger to total depth (Appendix 5.5).

   d. Lower the casing string (including bottom cap) down the borehole to the bottom and secure in place (for example, by using a pipe vise at the surface).

   e. Cut off the remaining casing to ground surface (Appendix 5.5).

   f. Insert the probe and measure moisture contact at regular (six-inch) intervals. Periodically check the probe to ensure a tight fit of the source holder. Extreme caution must be taken. Handle the probe at a maximum distance from the body in order to minimize exposure.

   g. Record the measurement in the logbook or on the appropriate field form.

      NOTE: The depth where the recording measurement begins depends on the soil moisture.

3.4. Postoperation

3.4.1. Field

A. Ensure that all equipment is accounted for, decontaminated (see SOP 1.6, General Equipment Decontamination), and ready for shipment.

B. Restore the site to presampling conditions and fill open sampling holes as specified in the RIP.

C. Make sure all sampling locations are properly staked and the location ID is readily visible on the location stake.

3.4.2. Documentation

A. Record cleanup and hole abandonment procedures and any uncompleted work (like site restoration or long-term monitoring) in the logbook.

B. Complete logbook entries, verify the accuracy of entries, and sign/initial all pages.

C. Review data collection forms for completeness.

3.4.3. Office

A. Deliver original forms and logbooks to the site manager for technical review. He/she will review, sign forms, and transmit to the document control officer (copies to the files) for eventual delivery to the Department of Energy.

B. Inventory equipment and supplies. Repair or replace all broken or damaged equipment. Replace expendable items. Return equipment to the equipment manager and report incidents of malfunction or damage.

C. With the site manager, interpret initial soil moisture content data to verify proper installation, determine if additional monitors need to be installed, and determine any need for adjustment in site-specific data reduction.

4. SOURCES

Morrison, R. D. 1983. "Groundwater Monitoring Technology, Procedures, Equipment and Applications." Timco Manufacturing, Inc., Prairie du Sac, Wisconsin.

U.S. Geological Survey. 1982. "National Handbook of Recommended Methods for Water-Data Acquisition." U.S. Department of the Interior, Reston, Virginia.

5. APPENDIXES

5.1 Equipment and Supplies Checklist

5.2 Soil Moisture Measurements Form

5.3 Data Form Completion

5.4 Soil Moisture (Gypsum) Block

5.5 Casing Installation and Neutron Depth Probe

5.6 Neutron Probe Assembly

APPENDIX 5.1

EQUIPMENT AND SUPPLIES CHECKLIST

_____ Moisture Blocks

- _____ Electrodes
- _____ Matrix
- _____ Data logger
- _____ Distilled water

_____ Neutron Probes

- _____ Access tubing (aluminum)
- _____ Surface/Depth probe
- _____ Probe checked/calibrated

_____ Sand

_____ Teflon or plastic sheets

_____ Hand or drill-rig auger

APPENDIX 5.2

SOIL MOISTURE MEASUREMENTS FORM

SOIL MOISTURE MEASUREMENTS

FACILITY CODE _____

LOGGER CODE _____ LOG DATE _____

INSTRUMENT _____ ACCEPTANCE CODE _____

COMMENTS _____

LOCATION ID	SAMPLE ID	DEPTH INTERVAL (FT)	RESISTANCE (ohms)	NEUTRON FLUX (COUNTS)

ACCEPTANCE CODES: A—ACCEPTABLE R—RECONNAISSANCE U—UNACCEPTABLE N—NOT DETERMINED

COMPLETE BOLDED DATA FOR ENTRY INTO TMS

SMD-030 (1/88) FORM COMPLETED BY/DATE _____ TECHNICAL REVIEWER/DATE _____

APPENDIX 5.3

DATA FORM COMPLETION

Use a pen with black ink that is not water soluble (not a felt-tip pen). Make an entry in each blank. Where there is no data entry, enter UNK for Unknown, NA for Not Applicable, or ND for Not Done. If any procedure was not performed as prescribed, give the reason for the change or omission on the form. To change an entry, draw a single line through it, add the correct information above it, and initial the change.

SOIL MOISTURE MEASUREMENTS

1. Facility Code. Five-character code abbreviating the facility name where program activity is being conducted. The first three characters indicate the facility, and the remaining two numbers designate the specific site within the facility.

2. Logger Code. Three-character or four-character code identifying the company responsible for collecting the information recorded on the form.

3. Instrument. Instrument ID of the neutron probe meter or resistance meter.

4. Log Date. The date the information recorded on the form was obtained in the format DD-MMM-YY (01-JAN-88).

5. Acceptance Code. One-character code assigned by the installation manager.

6. Comments. Any additional information.

7. Location ID. Four-character code assigned sequentially to each borehole, test pit, or surface location where chemical, biological, radiological, and other measurements are taken.

8. Sample ID. Four-digit number assigned to ensure that collected data retain uniqueness from other data collected when ambiguity is possible.

9. Depth Interval (Ft). Beginning and end depth where readings are taken in feet and tenths of feet.

10. Resistance (ohms). Resistance of electrical current through soil moisture gypsum block in units of ohms.

11. Neutron Flux (Counts). Count of neutron flux reading taken from neutron probe.

APPENDIX 5.4

SOIL MOISTURE (GYPSUM) BLOCK

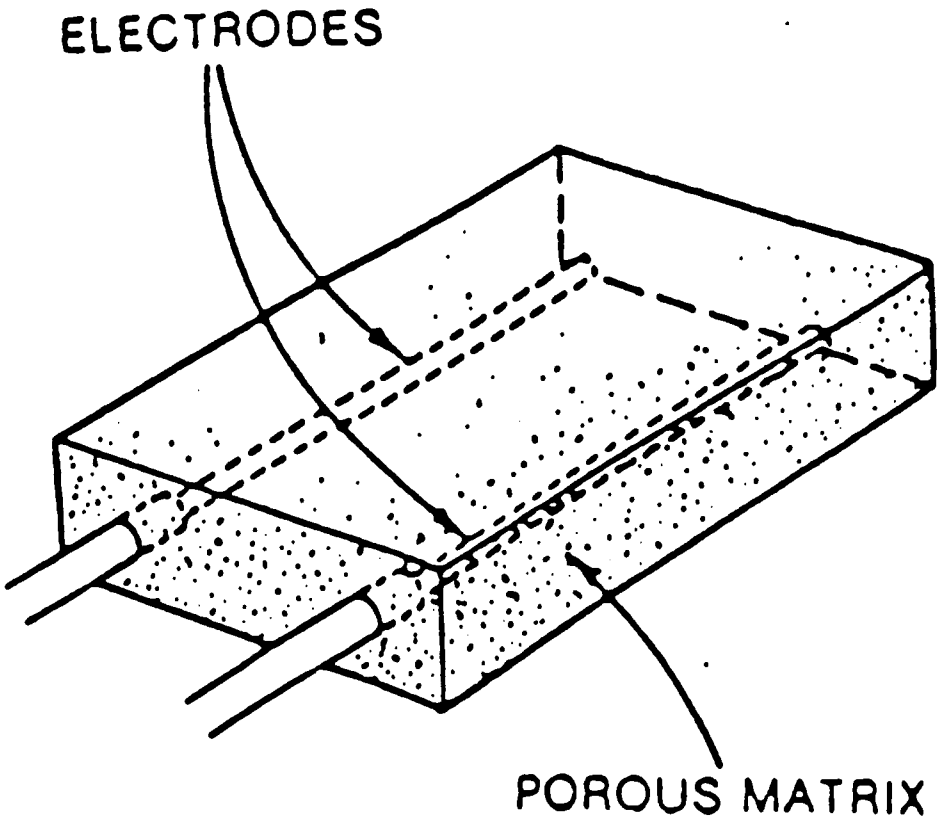

APPENDIX 5.5

CASING INSTALLATION AND NEUTRON DEPTH PROBE

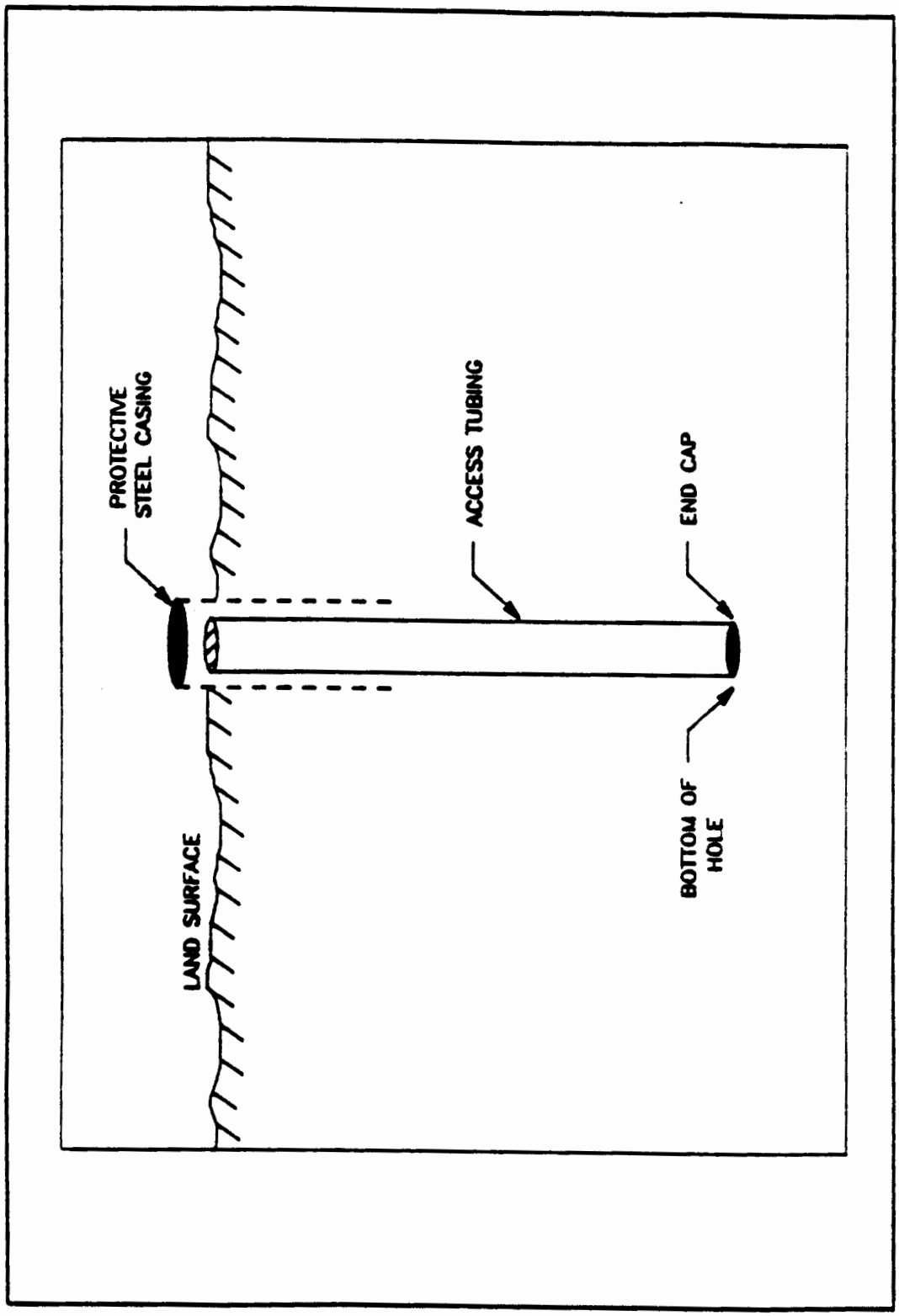

APPENDIX 5.6

NEUTRON PROBE ASSEMBLY

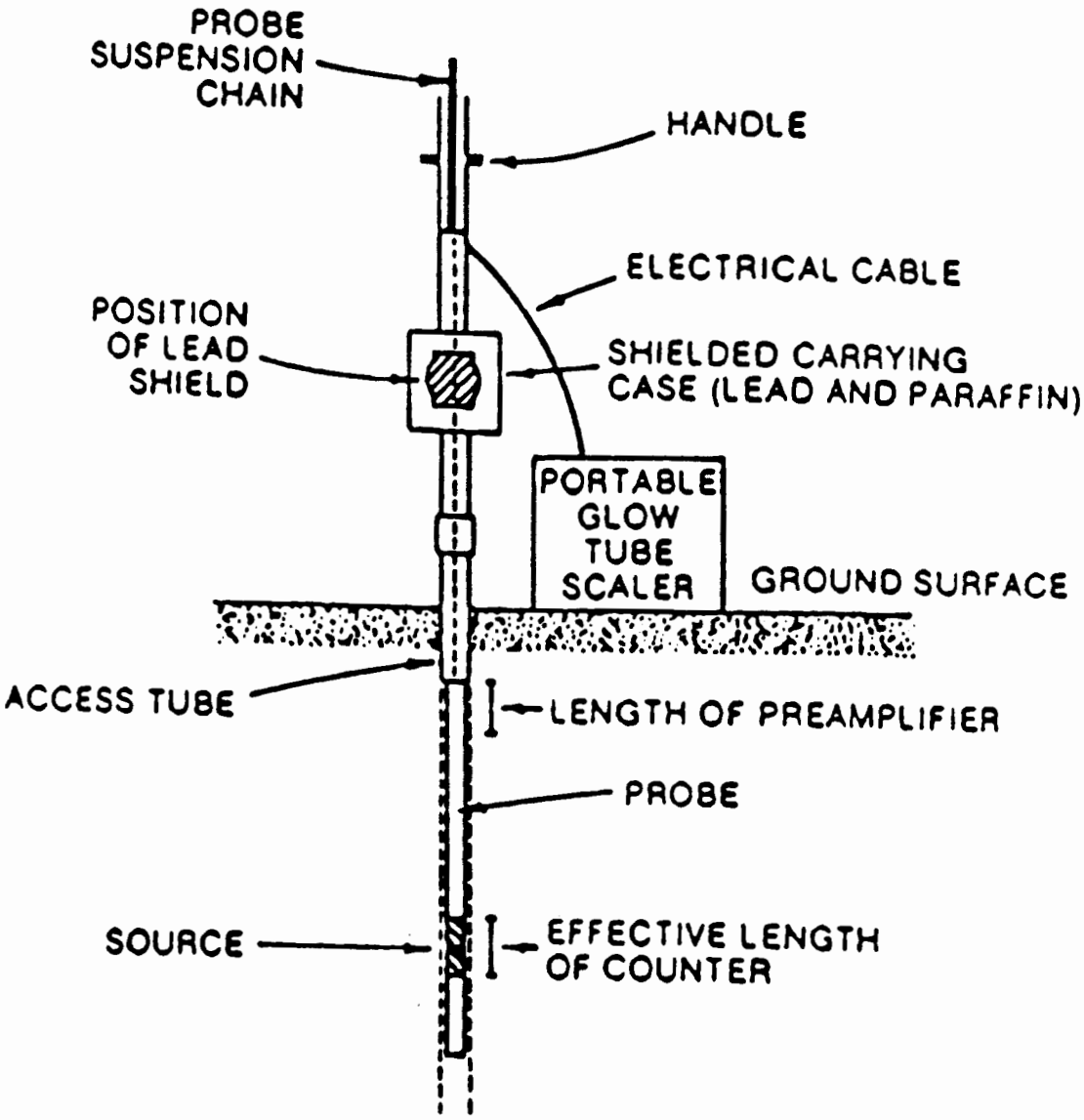

STANDARD OPERATING PROCEDURE 5.8

SOIL SAMPLING WITH A STAINLESS STEEL SURFACE SOIL SAMPLER

1. PURPOSE

To define procedures for collecting surface soil samples to determine the chemical and physical soil properties.

2. DISCUSSION

The Remedial Investigation Plan (RIP) contains specific details about the procedures and equipment for this SOP. Refer to the RIP for the type of samples to be collected. Collection and measurement of samples and the documentation of data will be performed as described in the associated procedures.

Sampling of the soil horizons above the groundwater table can detect contaminants before they migrate into the water table. Soil-sample analysis can help determine the extent of the contamination and establish the amount of contamination sorbed on aquifer solids that have the potential to contaminate groundwater. However, the depth from which soils are collected and the properties of the sampling tool can result in a high variability of soil chemical/physical properties. To optimize accuracy and precision in measuring soil chemical/physical properties, collect surface soil samples at a uniform depth and volume.

To reduce error introduced by field techniques, collect soil samples in a consistent manner and use chemically inert sampling materials. The sampler must be constructed of machined stainless steel and include a beveled cutting edge at one end of the sample collection ring. The capacity of the ring may vary, depending on the laboratory test for the collected sample. Typically, the ring sampler is from 3 to 4 inches in diameter and 2 to 8 inches in length. The ring sampler can be constructed of thin walls, as long as it is capable of withstanding the force of being driven into the ground by a 10-lb drop-hammer extension without deforming.

Soil types can vary considerably at a hazardous waste site. These variations, along with vegetation, can affect the rate of contaminant migration through the soil. Therefore, it is important that a detailed record is maintained during sampling operations, particularly regarding location, depth, and other characteristics (grain size, color, odor, and readings obtained from field-monitoring equipment) specified in the RIP. Changes in temperature, available oxygen, and light penetration can radically alter the rate of chemical reactions or the associated microbial activity in a sample. As a result, samples should be kept at their at-depth temperature or lower and protected from direct light. They should be sealed tightly in glass bottles and analyzed as soon as possible.

3. PROCEDURES

3.1. Associated Procedures

Before every operation, a review of the SOPs 1.1-1.10 is necessary. These SOPs contain general information on the performance of field activities. They should be consulted for specific information about equipment and supplies; sample collection, preservation, packaging, and shipping; decontamination procedures; and documentation requirements. Procedures directly associated with this SOP are listed below.

SOP No.	SOP Title
1.1	General Instructions for Field Personnel
1.3	Sample Control and Documentation
1.4	Sample Containers and Preservation
1.5	Guide to Handling, Packaging, and Shipping of Samples
1.6	General Equipment Decontamination
4.1	Soil Boring
5.1	Soil and Rock Borehole Logging and Sampling

3.2. Preparation

3.2.1. Office

A. Review the RIP and SOPs listed in Section 3.1.

B. Coordinate schedules/actions with the installation staff.

C. Obtain appropriate permission for property access.

D. Assemble the equipment and supplies listed in Appendix 5.1. Ensure the proper operation of all sampling equipment.

E. Notify the analytical laboratory of sample types, the number of samples, and the approximate arrival date.

F. Contact the carrier that will transport samples to obtain information on regulations and specifications.

3.2.2. Documentation

A. Obtain a logbook from the QA officer.

B. Record results of the equipment check in the logbook.

C. Obtain a sufficient number of the appropriate ER Program data collection forms (see INDEX TO SOPs).

D. Consult the ER Program data administrator for a current list of information management codes, location IDs, and sample numbers used in the completion of data forms.

3.2.3. Field

A. When necessary, decontaminate or preclean all equipment before soil sampling as described in SOP 1.6, General Equipment Decontamination.

B. Decontaminate all sampling equipment before taking the first sample and between sampling intervals (see SOP 1.6, General Equipment Decontamination, and the RIP).

3.3. Operation

A. Whenever a sample is collected, describe the location and sample using the Location Information and Borehole Log (Soil) forms. Copies of these forms are supplied in SOP 4.1, Soil Boring, and SOP 5.1, Soil and Rock Borehole Logging and Sampling, respectively. Complete the forms as described in these SOPs.

B. Procedure for Soil Sampling

NOTE: The component parts of a typical surface soil sampler are illustrated in Appendix 5.2.

1. Place the sampling cap inside the sampler ring and drive the assembly into the ground with a weighted drive hammer. Drive the sampler ring into the ground until the inside bottom of the cap touches the soil surface, but no further.

2. Use a stainless steel trowel with the same diameter as the sampler ring to move excess soil from the sides of the ring sampler. Push the trowel underneath the ring sampler, keeping the trowel in contact with the ring walls.

3. Raise and invert the sampler assembly, keeping the trowel in place.

4. If physical properties of the soil are to be determined, transport the sampler ring directly to the laboratory for *in situ* measurements of the undisturbed sample.

   If soil chemistry properties are to be determined, remove the soil from the ring sampler and transfer the sample into an appropriate sample bottle with a stainless steel or Teflon scoop, lab spoon, or the equivalent. Consult SOP 1.4, Sample Containers and Preservation, for guidance regarding the type of sample container, holding time, and preservation techniques to be used. If required, be sure the Teflon liner is present in the cap. Secure the cap tightly. Preservation with chemical additives is not necessary. Instead, preservation techniques are limited to cooling the sample with ice. When feasible, minimize the holding time. Transport the sample to the laboratory no later than two days after collection.

   NOTE: Whenever a sample is collected, a custody record must be initiated on the Custody Transfer Record/Lab Work Request form and a Soil Sample Identification Label affixed to the sample container. SOP 1.3, Sample Control and Documentation, contains copies of the form and label and instructions for completing the form and label.

5. Clean the sampler assembly with a wire brush and decontaminate the equipment according to SOP 1.6, General Equipment Decontamination, between sample locations.

6. Fill the hole and replace any grass turf.

3.4. Postoperation

3.4.1. Field

A. Ensure that all equipment is accounted for, decontaminated (see SOP 1.6, General Equipment Decontamination), and ready for shipment.

B. Restore the site to presampling conditions and fill open sampling holes as specified in the RIP.

C. Make sure all sampling locations are properly staked and the location ID is readily visible on the location stake.

D. Prepare samples and transport according to SOP 1.3, Sample Control and Documentation; SOP 1.4, Sample Containers and Preservation; and SOP 1.5, Guide to Handling, Packaging, and Shipping of Samples.

3.4.2. Documentation

A. Record cleanup and hole abandonment procedures and any uncompleted work (like site restoration or long-term monitoring) in the logbook.

B. Complete logbook entries, verify the accuracy of entries, and sign/initial all pages.

C. Review data collection forms for completeness.

3.4.3. Office

A. Deliver original forms and logbooks to the site manager for technical review. He/she will review, sign forms, and transmit to the document control officer (copies to the files) for eventual delivery to the Department of Energy.

B. Inventory equipment and supplies. Repair or replace all broken or damaged equipment. Replace expendable items. Return equipment to the equipment manager and report incidents of malfunction or damage.

C. Contact the analytical laboratory to ensure that samples arrived safely and instructions for sample analyses are clearly understood.

4. SOURCE

Soiltest Environmental Division. 1986. "Test Instrumentation and Equipment." Soiltest Environmental Division report, Evanston, Illinois.

5. APPENDIXES

5.1. Equipment and Supplies Checklist

5.2. Component Parts of a Surface Soil Ring Sampler

APPENDIX 5.1

EQUIPMENT AND SUPPLIES CHECKLIST

_____ Stainless steel ring sampler

_____ Stainless steel trowel

_____ Stainless steel sampler top

_____ Stainless steel wire brush

_____ Drive hammer (3 lbs or 10 lbs)

_____ Plastic sheets or stainless steel sampling trays

_____ Decontamination solutions and distilled water

_____ Brushes (long-handled scrub or wire)

_____ Galvanized tub

_____ Trash bags

_____ Buckets (galvanized, stainless steel, and plastic)

_____ Garden pressure sprayer

_____ Cleaning wipes

_____ Kim wipes

_____ 55-gallon drums

_____ Teflon or stainless steel scoop or spoon

_____ Any additional supplies listed in associated procedures

APPENDIX 5.2

COMPONENT PARTS OF A SURFACE SOIL RING SAMPLER

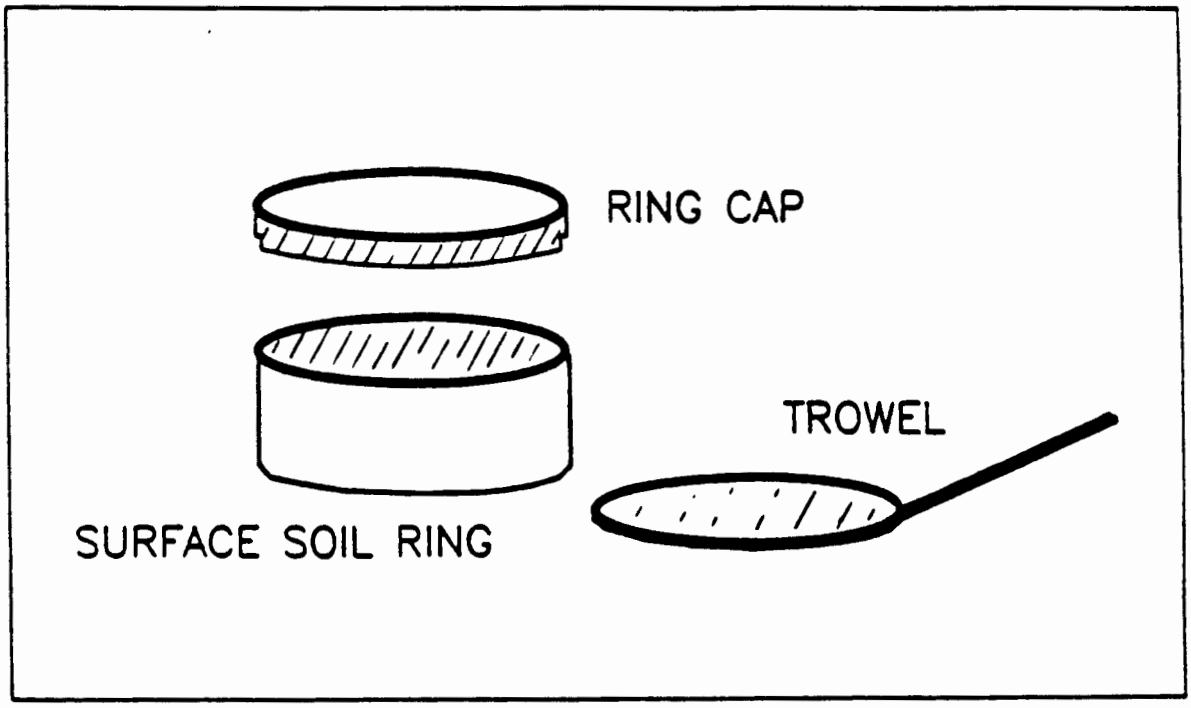

STANDARD OPERATING PROCEDURE 6.1

HEALTH AND SAFETY MONITORING OF COMBUSTIBLE GAS LEVELS

1. PURPOSE

To describe the equipment and proper method for monitoring combustible gas levels in order to determine when an explosion hazard exists in the work environment.

2. DISCUSSION

The Remedial Investigation Plan (RIP) provides information on the scope of specific operations, related health and safety requirements, and the applicability of this procedure. Combustible gas indicators (or explosimeters) are used to determine the potential for the combustion or explosion of unknown atmospheres. A typical combustible gas indicator (CGI) determines the level of organic vapors and gases present in an atmosphere as a percentage of the lower explosive limit (LEL) or lower flammability limit (LFL) by measuring the change in electrical resistance in a Wheatstone bridge circuit.

CGIs provide readouts in units of percent LEL, in parts per million (ppm) combustible gases by volume, or both. The types of combustible gases to be encountered are often unknown. In those instances, the more explosive the calibration gas (the lower the LEL), the more sensitive the indication of explosivity, and a greater margin of safety results. The operator should be familiar with the LEL concentrations for specific gases to effectively use instruments that provide data only in ppm combustible gas (by volume).

Although instruments can be purchased that are factory-calibrated for gases like butane, pentane, natural gas, or petroleum vapors, methane calibration is the most common. The LEL of methane is 5% by volume in air; therefore, an air mixture containing 5% methane will be read as 100% LEL and is explosive. When combustible gases other than methane are sampled, the relative response of the detector must be considered. Recalibration to other gases may be possible (see the manufacturer's recommendations), and National Bureau of Standards (NBS) traceable calibration gases should be used. The relative sensitivity of the detector and the differences in LEL for different gases will produce varying meter responses. Correlation equations that will convert the percent LEL (based on methane) indicated by the instrument to a percent LEL for another combustible gas can usually be found in the CGI operating manual. Many units have alarm systems that can be adjusted for various LELs, and several incorporate oxygen analyzers.

2.1. Definitions

A. Lower Explosive Limit (LEL)

The LEL (also LFL, lower flammability limit) is defined as the lowest concentration of gas or vapor in air by volume that can be ignited and cause an explosion or flame propagation.

B. Upper Explosive Limit (UEL)

The UEL (also UFL, upper flammability limit) is the concentration of gas in air above which there is insufficient oxygen available to support combustion and an explosion is unlikely. A flame, however, may burn at the gas/air interface. Should additional air enter the mixture, a very explosive atmosphere may develop.

2.2. Instrument Limitations

A. Of the many instruments commercially available for detecting combustible or explosive gas, some are not certified safe for operation in the atmospheres they can detect. It is important to use only those instruments that are certified safe for use in atmospheres greater than 25% of the LEL. The instrument manufacturer's operating manual should be consulted to determine safety certification in specific atmospheres.

B. Combustible gas measurement instruments do not indicate if a given atmosphere contains hazardous or toxic compounds.

C. The CGI cannot be used in atmospheres containing silanes, silicones, silicates, or other compounds containing silicon because these substances seriously impair the instrument response.

D. If the detector has a platinum filament, its sensitivity may be reduced by exposure to gases like leaded gasoline vapors (tetraethyl lead), sulfur compounds (mercaptans and hydrogen sulfide), and sulfide compounds. An inhibitor filament that will nullify the effect of leaded gasoline vapors is available on some commercial units (Mine Safety Appliances Company, Model 260 Portable Combustible Gas and Oxygen Alarm). The instrument manufacturer's operating manual should be consulted to determine the instrument's ability to function in leaded gasoline atmospheres.

E. An oxygen detector should be used in conjunction with a CGI. Select a unit with this feature and follow the operating manual when the oxygen detector is calibrated and used. This is especially important when atmospheres are monitored within enclosed spaces or where oxygen deficient atmospheres (<19.5%) may exist.

F. Unusually high concentrations of sulfur dioxide, fluorine, chlorine, bromine, iodine, and oxides of nitrogen cause measurement interference.

G. Combustible gas indicator instruments must be calibrated frequently. Using an NBS traceable calibration gas, consult the manufacturer's operating manual for calibration frequency. Also, frequent calibration will be necessary if several known organic species are present. Maximum accuracy requires a recalibration for each gas.

3. PROCEDURE

3.1. Associated Procedures

Information that applies to most field activities is provided in SOPs 1.1-1.10. In addition to the RIP, those SOPs provide guidance that may supplement the information

in this procedure. They should be consulted as necessary to obtain specific information about equipment and supplies; sample collection, preservation, packaging, and shipping; decontamination procedures; and documentation requirements. Procedures directly associated with this SOP are listed below.

SOP No.	SOP Title
1.1	General Instructions for Field Personnel
1.6	General Equipment Decontamination

3.2. Preparation

3.2.1. <u>Office</u>

A. Review the RIP and SOPs listed in Section 3.1.

B. Coordinate schedules/actions with the installation staff.

C. Obtain appropriate permission for property access.

D. Assemble the equipment and supplies listed in Appendix 5.1. Perform a minimal check of the CGI in the office to ensure that it is functioning properly. Obtain the CGI, its operating manual, and a supply of NBS traceable gas. Methane is the factory calibration gas, but other gaes may be used for specific requirements. Perform the equipment checks described below.

1. Make sure the instrument is clean and serviceable, especially sample lines and detector surfaces.

2. Check the battery charge level. If in doubt, charge the battery as described in the operating manual. Some units have charge level meters, while others have only low charge alarms.

3. Turn the unit to the on position and allow the instrument sufficient warmup time.

4. Verify that the sample pump is operable when the analyzer is on. The pump can usually be heard when operating.

5. With the intake assembly in combustible gas-free ambient air, zero the meter by rotating the zero control until the meter reads 0% LEL. For instruments with an additional oxygen meter, adjust the dial to 21% oxygen in nonhazardous locations.

6. Calibrate the unit against a known concentration of a calibration gas like hexane by rotating the calibration control (span or gain) until the meter reads the same concentration as the known standard.

7. Some instruments, like the Gas Tech Model 1314, require internal calibrating with a small screwdriver. Consult the operating manual before calibration. With this model, it is also necessary to maintain the proper flow rate during calibration. Connect a flow meter between the CGI and the calibration gas cylinder to monitor the flow rate.

8. The Gas Tech Model 1314 and others are equipped with three meters that read in percent O_2, percent LEL, and ppm. A correctly calibrated instrument for determining percent LEL is critical for monitoring many work environments. The percent oxygen is usually factory calibrated and should not be adjusted in the field. The ppm dial is often not used in the field unless a Photoionization Detector (PID) or Flame Ionization Detector (FID) is not available, as these instruments are considered to be more accurate.

3.2.2. **Documentation**

A. Obtain a logbook from the QA officer.

B. Record results of the equipment check in the logbook.

C. Obtain a sufficient number of the appropriate ER Program data collection forms (see INDEX TO SOPs).

D. Consult the ER Program data administrator for a current list of information management codes and location IDs used in the completion of data forms.

3.2.3. **Field**

A. Instrument Check

Before using the CGI in the field, follow the procedures in Section 3.2.1.D. Additional adjustments may be made. If necessary, adjust the alarm setting to the appropriate combustibility limit. The action level or the point at which activities are halted and personnel removed from the immediate vicinity is usually less than 25% of the LEL for the gases that are present.

B. Record necessary calibration data in the logbook and include the information listed below.

1. Date and time of arrival at the site

2. Site identification

3. Instrument, model number, and serial number

4. Date/time calibrated

5. Calibration gas used

6. Calibration location

7. Operator's signature

3.3. Operation

3.3.1. Field Measurements

A. Calibrate the CGI daily before use in the field. The calibration procedure for the Gas Tech Model 1314 is outlined in Appendix 5.4. Also, consult the manufacturer's manual.

B. Complete the Combustible Gas Indicator Monitoring Data form (Appendix 5.2) as described in Appendix 5.3, Data Form Completion.

C. Position the intake assembly close to the area in question to get an accurate reading. For readings taken downhole during drilling, there will be a slight delay between positioning the intake tubing downhole and registering accurate meter readings because of the time required for the sample to travel the length of the tube.

D. In general, combustible gas indicator instruments respond in the manner described below.

1. The meter indicates 0.5 LEL (50%). This means that 50% of the concentration of combustible gas needed to reach an unstable combustible situation is present. If the LEL of the gas is 5% in air, then the instrument indicates the presence of a 2.5% mixture.

2. The meter needle stays above 1.0 LEL (100%). This means that the concentration of combustible gas is greater than the LEL and less than the UEL. Therefore, the concentration is immediately combustible and explosive.

3. The meter needle rises above the 1.0 (100%) mark and then returns to zero. This response indicates that the ambient atmosphere has a combustible gas concentration greater than the UEL.

E. Personnel should evacuate the area if any of the events listed below occur.

1. Sounding of the alarm

2. Readings that reach the action levels designated in the Health and Safety Plan

3. Malfunctioning of the CGI

4. Condition encountered or suspected that indicates oxygen enrichment or depletion of the atmosphere (specially designed units are available for operation in those atmospheres)

F. Some important factors to keep in mind during use are listed below.

1. Slow, sweeping motions of intake or cell assembly will help ensure that problem atmospheres are not bypassed. Cover an area from floor (ground) to ceiling, the breathing zone, and areas where maximum concentrations may be expected (for example, downhole during drilling).

2. Operation of the unit in temperatures outside the recommended operating range may compromise the accuracy of readings or damage the instrument. Check the operating manual for the temperature limitations of a particular model.

3. Many combustible gas indicators are not designed for use in oxygen-enriched or depleted atmospheres. If this condition is encountered or suspected, personnel should evacuate the area. Specially designed units are available for operation in those atmospheres.

4. Use an oxygen detector in conjunction with a CGI. Select a unit and follow the operating manual for calibration and use of the oxygen detector.

5. Calibrate the equipment regularly and charge the battery after each field use. See the operating manual for details.

6. The operator should fully understand the operating principles and procedures for the specific CGI in use.

3.4 Postoperation

3.4.1 Field

A. When the activity is completed or at the end of the day, carefully clean the outside of the CGI with a damp disposable towel to remove any visible dirt. Return the CGI to a secure area and place on charge.

B. Ensure that all equipment is accounted for, decontaminated (see SOP 1.6, General Equipment Decontamination), and ready for shipment.

C. Make sure all survey or sampling locations are properly staked and the location ID is readily visible on the location stake.

3.4.2. Documentation

A. Record any uncompleted work (like additional monitoring) in the logbook.

B. Complete logbook entries, verify the accuracy of entries, and sign/initial all pages.

C. Review data collection forms for completeness.

3.4.3. Office

A. Deliver original forms and logbooks to the document control officer (with copies to the site manager and files) for eventual delivery to the Department of Energy.

B. Inventory equipment and supplies. Repair or replace all broken or damaged equipment. Replace expendable items. Return equipment to the equipment manager and report incidents of malfunction or damage.

4. SOURCE

EPA. 1984. "Characterization of Hazardous Waste Sites - A Methods Manual: Volume II, Available Sampling Methods, Second Edition," U.S. Environmental Protection Agency report EPA-600/4-84-076. Environmental Monitoring Systems Laboratory, Office of Research and Development, Las Vegas, Nevada.

5.. APPENDIXES

5.1. Equipment and Supplies Checklist

5.2. Combustible Gas Indicator Monitoring Data Form

5.3. Data Form Completion

5.4. Calibration Procedure for Gas Tech Model 1314

APPENDIX 5.1

EQUIPMENT AND SUPPLIES CHECKLIST

_____ CGI

_____ Battery charger for CGI

_____ Oxygen sensor

_____ Battery charger for oxygen sensor

_____ Spare gas detector filaments

_____ Spare batteries for CGI

_____ Jeweler's screwdrivers for internal adjustment

_____ Calibration kit

A) Spare gas cylinder (NBS traceable calibration gas)
B) Valve attachment
C) Flexible tubing (tygon)
D) Cylinder to encapsulate sensor probe

_____ Probe extensions

APPENDIX 5.2

COMBUSTIBLE GAS INDICATOR MONITORING DATA FORM

COMBUSTIBLE GAS INDICATOR (CGI) MONITORING DATA

FACILITY CODE _____ **LOG DATE** _____

LOGGER CODE _____ FIELD REP _____

CGI MANUFACTURER _____ CGI MODEL NO _____

SERIAL NO _____ CALIBRATION DATE/TIME _____

ACCEPTANCE CODE _____ BATTERY CONDITION _____

CALIBRATION GAS (%LEL):
TYPE _____ CONCENTRATION _____ % LEL CYLINDER SERIAL NO _____

CALIBRATION GAS (PPM):
TYPE _____ CONCENTRATION _____ PPM CYLINDER SERIAL NO _____

COMMENTS _____

LOCATION ID OR DESCRIPTION	COORDINATES (FT)		MONITORING TIME (HH:MM)	LOCATION TYPE	% LOWER EXPLOSIVE LIMIT	PPM	% OXYGEN
	NORTH	EAST					

ACCEPTANCE CODES: A–ACCEPTABLE R–RECONNAISSANCE U–UNACCEPTABLE N–NOT DETERMINED

LOCATION TYPES: BH – BOREHOLE SL – SURFACE LOCATION TP – TEST PIT WL – WELL

COMPLETE BOLDED DATA FOR ENTRY INTO TIMS

CGI–101 (1/88)

FORM COMPLETED BY/DATE _____ TECHNICAL REVIEWER/DATE _____

APPENDIX 5.3

DATA FORM COMPLETION

Use a pen with black ink that is not water soluble (not a felt-tip pen). Make an entry in each blank. Where there is no data entry, enter UNK for Unknown, NA for Not Applicable, or ND for Not Done. If any procedure was not performed as prescribed, give the reason for the change or omission on the form. To change an entry, draw a single line through it, add the correct information above it, and initial the change.

COMBUSTIBLE GAS INDICATOR MONITORING DATA FORM

1. Facility Code. Five-character code abbreviating the facility name where program activity is being conducted. The first three characters indicate the facility, and the remaining two numbers designate the specific site within the facility.

2. Log Date. The date the information recorded on the form was obtained, in the format DD-MMM-YY (01-JAN-88).

3. Logger Code. Three-character or four-character code identifying the company responsible for collecting the information recorded on the form.

4. Field Rep. The name of the field representative.

5. CGI Manufacturer. The company that manufactured the CGI.

6. CGI Model No. The model number of the CGI.

7. CGI Serial No. The serial number of the CGI.

8. CGI Calibration Date/Time. The date and time when the CGI was last calibrated.

9. Acceptance Code. One-character code assigned by the site manager.

10. Battery Condition. The battery charge reading at the beginning of the measurement.

11. Calibration Gas (% LEL). This information consists of three data fields: the chemical name of the calibration gas (type), concentration of the calibration gas (% LEL), and the serial number of the gas cylinder.

12. Calibration Gas (ppm). This information consists of three data fields: the chemical name of the calibration gas (type), concentration of the calibration gas (ppm), and the serial number of the gas cylinder.

13. Comments. Any additional information.

14. Location ID or Description. Four-character code assigned sequentially to each borehole, test pit, or surface location where physical, chemical, biological, radiological, and other measurements are taken.

15. Coordinates (Ft). The location of the measurement of the survey grid in units of feet. The two coordinate fields are in the format north, east.

16. Monitoring Time (HH:MM). The time when a field measurement was taken in the format hours:minutes using a 24-hr clock. Example: 08:37 for 8:37 a.m. and 19:12 for 7:12 p.m. (See conversion table below.)

Conversion Table

Conventional Time	24-Hr Time
1:00 a.m.	1:00
12:00 Noon	2:00
1:00 p.m.	13:00
2:00 p.m.	14:00
3:00 p.m.	15:00
4:00 p.m.	16:00
5:00 p.m.	17:00
6:00 p.m.	18:00
7:00 p.m.	19:00
8:00 p.m.	20:00
9:00 p.m.	21:00
10:00 p.m.	22:00
11:00 p.m.	23:00
12:00 Midnight	24:00

17. Location Type. Code describing the location of the CGI reading. The location type codes are: BH--borehole, TP--test pit, SL--surface location, and WL--well.

18. Percent Lower Explosive Limit. The reading obtained with the meter set to the LEL Scale.

19. PPM. The reading with the meter set to the PPM scale.

20. Percent Oxygen. Record the percent oxygen reading in this data field.

APPENDIX 5.4

CALIBRATION PROCEDURE FOR GAS TECH MODEL 1314

GAS TECH MODEL 1314 CALIBRATION

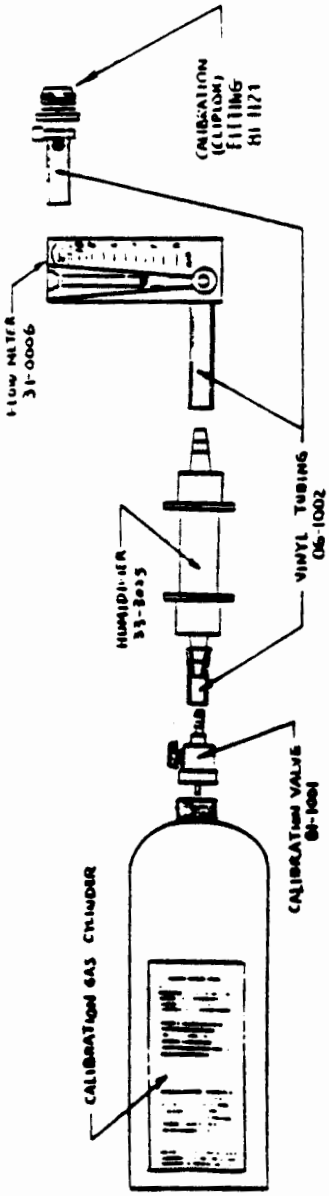

CALIBRATION PROCEDURE

1. **PPM RANGE**
   - 1.01 Turn on instrument, allow to warm up and adjust zero in normal way.
   - 1.02 Add a few drops of water to glass wool packing inside humidifier. Glass wool should be moist but not dripping.
   - 1.03 Couple flowmeter to Cliplok fitting, and humidifier to flowmeter inlet, as shown.
   - 1.04 Couple Cliplok fitting to instrument inlet.
   - 1.05 Readjust zero as required after instrument stabilizes.
   - 1.06 Note flowmeter reading.
   - 1.07 Connect calibration valve to ppm—range cylinder. Open valve slightly to produce a small flow.
   - 1.08 Couple valve outlet to humidifier inlet.
   - 1.09 Adjust valve to give same flow on flowmeter as observed in 1.06.
   - 1.10 Watch meter as gas enters instrument. Observe highest reading.
   - 1.11 Compare reading with marked gas concentration on cylinder.
   - 1.12 If not correct, adjust calibration as shown in Section V of Instruction Manual.
   - 1.13 Turn off valve and disconnect calibration components.
2. **LEL Range**

   Use same procedure as above, but in LEL range. However, omit humidifier as it is not necessary in LEL range.

   Use LEL range cylinder.

GAD-120 (1/88)

STANDARD OPERATING PROCEDURE 6.2

HEALTH AND SAFETY MONITORING OF ORGANIC VAPORS WITH A PHOTOIONIZATION DETECTOR

1. PURPOSE

To describe the equipment and proper method for environmental monitoring of toxic gases and vapors using a portable photoionization detector (PID).

2. DISCUSSION

The Remedial Investigation Plan (RIP) provides information on the scope of the given operation and the applicability of this procedure to the work activities.

The PID is useful as a general survey instrument at hazardous waste sites. A PID is capable of detecting and measuring real-time concentrations of many organic and inorganic vapors in the air. A PID is similar to a flame ionization detector (FID) in application. The PID has somewhat broader capabilities because it can detect certain inorganic vapors. Conversely, the PID is unable to respond to certain low molecular weight hydrocarbons (like methane and ethane) that are readily detected by FID instruments. Appendix 5.1 describes the application comparisons between an FID organic vapor analyzer and a PID.

A PID will respond to most vapors that have an ionization potential less than or equal to that supplied by the ionizing source in the detector, which is an ultraviolet (UV) lamp. Several probes are available for the PID, each having a different source and a different ionization potential. For this reason, the selection of the appropriate probe is essential in obtaining useful field results. Though it can be calibrated to a particular compound, the instrument cannot distinguish between detectable compounds in a mixture of gases. Therefore, it indicates an integrated response to the mixture.

2.1. PID Instrument Limitations

A. The PID is a nonspecific total vapor detector. It cannot be used to identify unknown substances; it can only quantify them.

B. The PID must be calibrated to a specific compound.

C. The PID does not respond to certain low molecular weight hydrocarbons like methane and ethane.

D. Certain toxic gases and vapors like carbon tetrachloride and hydrogen cyanide have high ionization potentials and cannot be detected with a PID.

E. Certain models of PID instruments are not intrinsically safe. Refer to the manufacturer's operating manual for use in potentially flammable or combustible atmospheres. A PID should be used in conjunction with a combustible gas indicator (see SOP 6.1, Health and Safety Monitoring of Combustible Gas Levels).

F. Electrical power lines or power transformers close to the PID instrument may cause measurement errors. Under this circumstance, refer to the operating manual for proper procedures.

G. High winds and high humidity will affect measurement readings. Certain models of PID instruments become unusable under foggy conditions. An indication of this is the needle dropping below 0.

H. The lamp window must be periodically cleaned to ensure ionization of the air contaminants.

I. One PID instrument, the HNu, measures concentrations from about 1 to 2000 ppm, although the response is not linear over this entire range. For example, the response to benzene is linear from about 0 to 600 ppm. This means the HNu reads a true concentration of benzene only between 0 and 600. Greater concentrations are read at a lower level than the true value. Consult the manufacturer's operating manual to determine the instrument's response to various chemicals.

2.2. Regulatory Limitations

A. Transport of calibration gas cylinders by passenger and cargo aircraft follow the U.S. Code of Federal Regulations, 49 CFR Parts 100-177. Benzene is a typical calibration gas included with a PID. Benzene is classified as a nonflammable gas, UN 1556, and the proper shipping name is compressed gas. It must be shipped in cargo aircraft only.

3. PROCEDURE

3.1. Associated Procedures

Information that applies to most field activities is provided in SOPs 1.1-1.10. In addition to the RIP, those SOPs provide guidance that may supplement the information in this procedure. They should be consulted as necessary to obtain specific information about equipment and supplies; sample collection, preservation, packaging, and shipping; decontamination procedures; and documentation requirements. Procedures directly associated with this SOP are listed below.

SOP No.	SOP Title
1.1	General Instructions for Field Personnel
1.6	General Equipment Decontamination
6.1	Health and Safety Monitoring of Combustible Gas Levels

3.2. Preparation

3.2.1 Office

A. Review the RIP and SOPs listed in Section 3.1.

B. Coordinate schedules/actions with the installation staff.

C. Obtain appropriate permission for property access.

D. Assemble the equipment and supplies listed in Appendix 5.2. Perform the procedures described below.

1. Start-Up Procedure

   a. Before attaching the probe, check the function switch on the control panel to ensure that it is in the off position. Attach the probe by plugging it into the interface on the top of the readout module. Use care in aligning the prongs in the probe cord with the plug interface. Do not use excessive force.

   b. Turn the function switch to the battery check position. The needle on the meter should be within or above the green battery arc on the scale; if not, recharge the battery. If the red indicator light comes on, the battery needs recharging.

   c. Turn the function switch to any range setting. Look into the end of the probe to see if the lamp is on. If it is on, it will emit a purple glow. Do not stare into the probe any longer than 3 sec. Long-term exposure to UV light will damage the eyes. Also, listen for the hum of the fan motor.

   d. To zero the instrument, turn the function switch to the standby position and rotate the zero adjustment until the meter reads zero. A calibration gas is not needed because this is an electronic zero adjustment. If the span adjustment setting is changed after the zero is set, the zero should be rechecked and adjusted (if necessary). Wait 15 to 20 sec to ensure that the zero reading is stable. If necessary, readjust the zero.

2. Operational Check

   a. Follow the start-up procedure.

   b. With the instrument set on the 0 to 20 range, hold a solvent-based marker pen near the probe tip. If the meter deflects upscale, the instrument is working.

3. Calibration Procedure

   a. Follow the start-up procedure and the operational check.

   b. Set the function switch to the range setting for the concentration of the calibration gas.

   c. Remove the detector from the outer casing by loosening the screw on the bottom of the casing.

   d. Attach a regulator to a disposable cylinder of calibration gas. Connect the regulator to the probe of the PID with a piece of clean tygon tubing. Open the valve on the regulator.

   e. After 15 sec, adjust the internal calibration screw until the meter reading equals the concentration of the calibration gas used. Consult the operating manual for the location of this screw.

   f. If the PID does not start up, check out or calibrate properly and notify the equipment manager immediately. Under no circumstances should work

requiring monitoring with a PID be performed without a properly functioning instrument.

g. Replace the detector in the outer casing.

h. Contact the carrier that will transport equipment and hazardous materials to obtain information on regulations and specifications.

3.2.2. Documentation

A. Obtain a logbook from the QA officer.

B. Record results of the equipment check in the logbook.

C. Obtain a sufficient number of the appropriate ER Program data collection forms (see INDEX TO SOPs).

D. Consult the ER Program data administrator for a current list of management codes, location IDs, and sample numbers used in the completion of data forms.

E. Record the calibration data on the Photoionization Detector Field Data form (Appendix 5.3). See Appendix 5.4 (Data Form Completion) for instructions.

3.2.3. Field

A. Follow the start-up procedure, operational check, and calibration check described in Section 3.2.1.D.

B. Set the function switch to the appropriate range. If the concentration of gases or vapors is unknown, set the function switch to the 0 to 20 ppm range; adjust the range if necessary.

C. With the exception of the probe's inlet and exhaust, wrap the PID in clear plastic to prevent it from becoming contaminated and to prevent water from getting inside the instrument in the event of precipitation.

3.3. Operation

3.3.1 Measuring organic vapor levels using the PID

A. As with any field instrument, accurate results depend on the operator's knowledge of the operator's manual. Follow the instructions in the operating manual explicitly in order to obtain accurate results.

B. Position the intake assembly close to the monitoring area because the low sampling rate allows for only very localized readings. Do not immerse the intake assembly in fluid under any circumstances.

C. While taking care not to permit the PID to be exposed to excessive moisture, dirt, or contamination, monitor the work activity as specified in the site Health and Safety Plan. Conduct the PID survey at a slow to moderate rate of speed and slowly sweep the intake assembly (the probe) from side to side.

D. During drilling activities, perform PID monitoring at every 5-ft interval downhole, at the headspace, and in the breathing zone. In addition, monitoring may be performed in the breathing zone during actual drilling when elevated organic vapor levels are encountered. When the activity being monitored does not involve drilling (like surface sampling), readings may only be recorded in the breathing zone. Refer to the site Health and Safety Plan for specific monitoring instructions.

E. Be prepared to evacuate the area if the preset alarm sounds. Operators using supplied air systems may not need to evacuate the work area, but they should frequently observe the levels indicated by the instrument.

F. Static voltage sources like power lines, radio transmissions, or transformers may interfere with measurements. See the operator's manual for a discussion of necessary considerations.

3.4. Postoperation

3.4.1. Field

A. When the activity is completed or at the end of the day, carefully clean the outside of the PID with a damp disposable towel to remove any visible dirt. Return the PID to a secure area and place on charge.

B. Ensure that all equipment is accounted for, decontaminated (see SOP 1.6, General Equipment Decontamination), and ready for shipment.

C. Make sure all survey or sampling locations are properly staked and the location ID is readily visible on the location stake.

3.4.2. Documentation

A. Record any uncompleted work (like additional monitoring) in the logbook.

B. Complete logbook entries, verify the accuracy of entries, and sign/initial all pages.

C. Review data collection forms for completeness.

3.4.3. Office

A. Deliver original forms and logbooks to the document control officer (with c ies to the site manager and files) for eventual delivery to the Department of Energy.

B. Inventory equipment and supplies. Repair or replace all broken or damaged equipment and charge the batteries. Replace expendable items. Return equipment to the equipment manager and report incidents of malfunction or damage.

4. SOURCES

HNU Systems, Inc. 1986. "Instruction Manual for the Trace Gas Analyzer Model PI 101." Newton, Massachusetts.

CFR 49. 1985. Code of Federal Regulations, Title 49, U.S. Department of Transporatation, Parts 100-177. November 1, 1985. Washington, D.C.: U.S. Government Printing Office.

EPA. 1984. "Characterization of Hazardous Waste Sites--A Methods Manual: Volume II, Available Sampling Methods, Second Edition" U.S. Environmental Protection Agency report EPA-600/4-84-076. Environmental Monitoring Systems Laboratory, Office of Research and Development, Las Vegas, Nevada.

5. APPENDIXES

5.1. Comparison of the FID and PID

5.2. Equipment and Supplies Checklist

5.3. Photoionization Detector Field Data Form

5.4. Data Form Completion

APPENDIX 5.1

COMPARISON OF THE FID AND PID

	FID	PID
Response	Responds to many organic gases and vapors, especially low molecular weight hydrocarbons.	Responds to many organic and some inorganic gases and vapors, especially heavy hydrocarbons.
Application	In survey mode, detects total concentrations of gases and vapors. In GC mode, identifies and measures specific compounds.	In survey mode, detects total concentrations of gases and vapors. Some identification of compounds possible if GC column and standards are used.
Limitations	Does not respond to inorganic gases and vapors with a higher ionization potential than the flame detector. No temperature control.	Does not respond to methane or inorganic aliphatic chlorinated solvents. Does not respond properly in presence of water vapor (high humidity). Does not detect a compound if probe (lamp) has a lower energy than compound's ionization potential.
Calibration gas	Methane and others	Benzene (1,3-butadiene) and others
Ease of operation	Requires experience to interpret correctly, especially in GC mode.	Fairly easy to use and interpret. More difficult in the GC mode.
Detection limits	0.1 ppm (methane)	0.1 ppm (benzene), depends on lamp voltage.
Response time	2-3 sec (survey mode)	3 sec for 90% of total concentration

APPENDIX 5.1, Continued

	FID	PID
Maintenance	Periodically clean and inspect particle filters, valve rings, and burner chamber. Check calibration and pumping system for leaks. Recharge battery after each use.	Clean UV lamp frequently. Check calibration regularly. Recharge battery after each use.
Useful range	0-1000 ppm	0-2000 ppm
Service life	8 hrs; 3 hrs with strip chart recorder	10 hrs; 5 hrs with strip chart recorder

APPENDIX 5.2

EQUIPMENT AND SUPPLIES CHECKLIST

_____ Photoionization detector (PID)

_____ Operating manual

_____ Probes: 9.5eV_____, 10.2eV_____, and 11.7eV_____

_____ Battery charger for PID

_____ Spare batteries

_____ Jeweler's screwdriver for adjustments

_____ Tygon tubing

_____ NBS traceable calibration gas (type)_____

_____ "T" valve for calibration

_____ Intake assembly extension

_____ Strap for carrying PID

_____ Teflon tubing for downhole measurements

_____ Plastic bags for protecting the PID from moisture and dirt

APPENDIX 5.3

PHOTOIONIZATION DETECTOR FIELD DATA FORM

PHOTOIONIZATION DETECTOR FIELD DATA

FACILITY CODE _____ LOG DATE _____

LOCATION ID _____ LOCATION TYPE _____

LOGGER CODE _____ FIELD REP _____

PHOTOIONZATION DETECTOR INSTRUMENT: MODEL _____

MANUFACTURER _____ DATE/TIME CALIBRATED _____

SERIAL NO _____ ACCEPTANCE CODE _____

CALIBRATION GASES:	
TYPE/CYLINDER ID NO	CONCENTRATION (PPM)/SPAN
1	1
2	2

COMMENTS _____

TIME (HH:MM)	SAMPLE ID	OBSERVED READING (ppm)					DRILLING DEPTH (FT)	COMMENTS
		DH	HS	BZ	D	OT		

ACCEPTANCE CODES: A–ACCEPTABLE R–RECONNAISSANCE U–UNACCEPTABLE N–NOT DETERMINED

LOCATION TYPES:
BH – BOREHOLE
SS – SOIL SAMPLE
SL – SURFACE LOCATION
SB – SAMPLE BOTTLE
TP – TEST PIT
WL – WELL
OT – OTHER

OBSERVED READING: D – DURING DRILLING (BZ)
DH – DOWNHOLE BZ – BREATHING ZONE
HS – HEADSPACE OT – OTHER

COMPLETE BOLDED DATA FOR ENTRY INTO TIMS
PHO-040 (1/88)

FORM COMPLETED BY/DATE _____ TECHNICAL REVIEWER/DATE _____

APPENDIX 5.4

DATA FORM COMPLETION

Use a pen with black ink that is not water soluble (not a felt-tip pen). Make an entry in each blank. Where there is no data entry, enter UNK for Unknown, NA for Not Applicable, or ND for Not Done. If any procedure was not performed as prescribed, give the reason for the change or omission on the form. To change an entry, draw a single line through it, add the correct information above it, and initial the change.

PHOTOIONIZATION DETECTOR FIELD DATA FORM

1. Facility Code. Five-character code abbreviating the facility name where the program activity is being conducted. The first three characters indicate the facility, and the remaining two numbers designate the specific site within the facility.

2. Log Date. The date the information recorded on the form was obtained in the format DD-MMM-YY (01-JAN-88).

3. Location ID. Four-character code assigned sequentially to each borehole, test pit, or surface location where physical, chemical, biological, radiological, and other measurements are taken.

4. Location Type. Two-character code identifying where the sample was taken. There is one location type for each location ID. Location types include those listed below.

   BH--Borehole

   TP--Test Pit

   SL--Surface Location

   WL--Well

   SB--Sample Bottle

   SS--Soil Sample

   OT--Other (explain)

5. Logger Code. Three-character or four-character code identifying the company responsible for collecting the information on the form.

6. Field Rep. The name of the field representative.

7. PID Model. Model of photoionization detector (PID) instrument.

8. PID Manufacturer. Manufacturer's name on the PID instrument used.

9. Date/Time Calibrated. Last day and time when the PID instrument was calibrated. Calibration should be performed daily.

10. Serial No. Serial No. of PID instrument.

11. Acceptance Code. One-character code assigned by the site manager.

12. Calibration Gases

    a) Type/Cylinder ID No. Name of the calibration gas and the identification number of the cylinder.

    b) Concentration (ppm)/span. Concentration of calibration gas in parts per million (ppm) and the span setting for calibration.

13. Comments. Any additional information.

14. Time (HH:MM). The time when a field measurement was taken in the 24-hr clock format of hours:minutes (for example, 08:37 for 8:37 a.m. and 19:12 for 7:12 p.m.). See the conversion table below.

Conversion Table

Conventional Time	24-Hr Time
1:00 a.m.	1:00
12:00 Noon	2:00
1:00 p.m.	13:00
2:00 p.m.	14:00
3:00 p.m.	15:00
4:00 p.m.	16:00
5:00 p.m.	17:00
6:00 p.m.	18:00
7:00 p.m.	19:00
8:00 p.m.	20:00
9:00 p.m.	21:00
10:00 p.m.	22:00
11:00 p.m.	23:00
12:00 Midnight	24:00

15. Sample ID. When samples are being taken during a PID monitoring, the identification number or code assigned to a particular sample (like 01) is correlated with the observed readings and appropriate drilling depth (if drilling is being performed). This is useful in selecting samples for analyses and in the correlation of laboratory data with PID measurements.

16. Observed Reading (ppm). PID reading at the respective location ID in the units indicated on the meter. When the calibration gas and the gas being measured for the environment are the same, the meter reads in parts per million (ppm) during drilling. Readings may be taken downhole, at the headspace, and in the breathing zone, and data should be recorded in the appropriately marked column.

17. Drilling Depth (Ft). PID monitoring is performed every 5 ft during drilling. The depth of the drilling is listed in feet and can be given as the most recent interval (like 5-10) or as the ending depth (like 10).

18. Comments. Any additional information, including the type of gas being measured if this determination can be made (for example, by labels on drums).

STANDARD OPERATING PROCEDURE 6.3

HEALTH AND SAFETY MONITORING OF ORGANIC VAPORS WITH A FLAME IONIZATION DETECTOR

1. PURPOSE

To describe the equipment and proper method for environmental monitoring of toxic gases and vapors using a portable flame ionization detector (FID).

2. DISCUSSION

The Remedial Investigation Plan (RIP) provides information on the scope of the given operation and the applicability of this procedure to the work activities.

An FID is useful as a general screening tool to detect the presence of most organic vapors. It can be used to detect pockets of gaseous hydrocarbons in depressions or confined spaces, to screen drums or other containers for the presence of trapped vapors, or to screen an area for the presence of elevated levels of vapor-phase organics.

The FID is similar to a photoionization detector (PID) in application, but cannot detect certain inorganic vapors that are detected by the PID. However, the PID is unable to respond to certain low molecular weight hydrocarbons (like methane and ethane) that are readily detected by FID instruments. Appendix 5.1 describes the application comparisons between an FID organic vapor analyzer and a PID.

The FID will respond to most organic vapors as they form positively charged ions when burned in a hydrogen flame. The magnitude of the response is a function of the detector sensitivity and the ionization properties of the particular compound, as well as its concentration. As a result, the response must be compared with the response generated by a known concentration of a standard gas. The sample concentration is then reported as the parts-per-million (ppm) equivalent of the standard gas. Most units are calibrated with methane; however, almost any gaseous hydrocarbon that produces a response can be used. Many models also have built-in calibration circuits to ensure that the electronic response remains constant in all ranges.

2.1. FID Instrument Limitations

A. The FID does not respond to nongaseous organic compounds like some pesticides, polynuclear aromatic hydrocarbons (PNAs), and polychlorinated biphenyls (PCBs).

B. Most portable FIDs rely on the sample gas to supply the combustion air to the detector flame, so they are designed to operate in ambient atmospheres with oxygen concentrations of approximately 21%. This design precludes the sampling of process vents, poorly ventilated or sealed containers, or any sample gas hydrocarbon concentration sufficient to reduce the available oxygen or saturate the detector. Optional equipment is available that supplies oxygen from a compressed gas bottle or introduces sample gas through a dilution system with a known dilution factor.

C. Concentrations beyond the greatest scale factor of the instrument or in excess of 30% of the lower explosive limit (LEL) of the sample component require system modification. If system modifications are required, consult the manufacturer's operating manual.

D. Certain FID instruments have negligible response to carbon monoxide (CO) and carbon dioxide (CO_2). Their structure precludes the production of appreciable ions in the detector flame so other organic materials may be analyzed in the presence of CO and CO_2.

E. As with the PID, the FID responds differently to different compounds. Appendix 5.2 contains a list of the relative sensitivities of one FID model to some common organic compounds. Because the instrument is factory calibrated to methane, all relative responses are given in percentages with methane at 100. Therefore, the identity of the chemical of interest must be ascertained before its concentration can be determined. In addition, the unit requires a trained individual to maintain and operate the unit.

2.2. Regulatory Limitations

A. Department of Transportation regulations (DOT-E-7607) prohibit the carrying of compressed hydrogen gas on passenger aircraft. When the FID instrument is transported on a passenger aircraft, the hydrogen gas contained in the instrument must be emptied before loading.

B. Transport of an FID or extra cylinders of hydrogen gas or calibration gas by cargo aircraft must comply with the regulations stipulated in 49 CFR, Parts 100-177.

C. Appendix 5.6 describes the procedure for transporting an FID with a hydrogen tank. Consult the shipper for any recent changes in this procedure.

3. PROCEDURE

3.1. Associated Procedures

Information that applies to most field activities is provided in SOPs 1.1-1.10. In addition to the RIP, those SOPs provide guidance that may supplement the information in this procedure. They should be consulted as necessary to obtain specific information about equipment and supplies; sample collection, preservation, packaging, and shipping; decontamination procedures; and documentation requirements. Procedures directly associated with this SOP are listed below.

SOP No.	SOP Title
1.1	General Instructions for Field Personnel
1.6	General Equipment Decontamination

3.2. Preparation

3.2.1. Office

A. Review the RIP and SOPs listed in Section 3.1.

B. Coordinate schedules/actions with the installation staff.

C. Obtain appropriate permission for property access.

D. Contact the carrier that will transport samples to obtain information on regulations and specifications.

E. Assemble the equipment and supplies listed in Appendix 5.3. Perform the functional checks described below. The purpose of these checks is to verify that an instrument will function properly (for example, the batteries are serviceable and the instrument can be zeroed and calibrated) in the field. If problems develop, obtain a replacement unit and perform the same functional checks.

1. Turn the instrument on and allow adequate warmup time.

2. Check the battery charge level indicator. If it is not fully charged, recharge the battery as described in the manual.

3. Turn on the pump and check for leaks by covering the sample inlet and observing the rotameter. The indicator ball should drop to zero.

4. With the pump operating, open the hnydrogen gas storage tank valve and the supply regulator to allow fuel gas to flow into the detector chamber.

5. Depress the igniter switch, observe the indicator needle for positive response, and listen for a pop. if the flame fails to light, depress the igniter switch again. Once the detector flame is lit, the unit is ready for use. Before lighting the detector flame, always be sure that the carrier gas flow (usually sample gas) is started.

6. If the instrument has internal calibration capability, perform the instrument calibration according to the procedures described in the operating manual.l

7. If the instrument has an alarm mode, set the alarm at the desired concentration.

3.2.2. Documentation

A. Obtain a logbook from the QA officer.

B. Record results of the equipment check in the logbook.

C. Obtain a sufficient number of the appropriate ER Program data collection forms (see INDEX TO SOPs).

D. Consult the ER Program data administrator for a current list of information management codes, location IDs, and sample numbers used in the completion of data forms.

E. Record the calibration data on the Photoionization Detector Field Data form (Appendix 5.3). See Appendix 5.4 (Data Form Completion) for instructions.

3.2.3. Field

Before using the FID in the field, perform the following instrument checks to ensure that the equipment was not damaged during transport:

A. Follow the instrument checkout procedures described in Section 3.2.1.E.

B. If calibration to a specific hydrocarbon species is desired, complete this procedure according to the manufacturer's operating instructions.

C. Calibrate the FID daily before each use in the field.

3.3. Operation

3.3.1 Field Measurements of Organic Vapors

As with any field instrument, accurate results depend on the operator's knowledge of the operator's manual. The instructions in the manual should be followed explicitly in order to obtain accurate results.

A. Hold the sample probe in the area in question. The low sample rate allows for only very localized readings.

B. A slow sweeping motion should help prevent the bypassing of problem areas. Make sure the batteries are recharged within the time frame specified in the operator's manual. The usual length of the operating time between charges is 8 to 12 hours.

C. During drilling activities, perform FID monitoring at 5-ft intervals downhole, at the headspace, and in the breathing zone. In addition, where elevated organic vapor levels are encountered, monitoring may be performed in the breathing zone during actual drilling. When the activity does not require drilling (like surface sampling), readings may only be recorded in the breathing zone. Consult the Health and Safety Plan for the specific monitoring instructions.

D. Some units have alarms that signal the operator if the detector flame goes out. If the alarm sounds, evacuate the work area, relight the flame in a known safe area, and reenter the site.

E. Monitor fuel and combustion air supply gauges regularly to ensure sufficient gas supplies.

F. High background readings after prolonged use may indicate that the sample probe or in-line filters (in front of detector) need to be cleaned. Use pipe cleaners to clean the probe and clean air blown backwards through the probe to clean the filters. Do not use organic solvents because the detector may be saturated by the solvent.

G. Perform the routine maintenance described in the operating manual. Because the unit contains pressurized gas supplies, also perform leak-check procedures regularly. Leaking hydrogen gas is explosive.

H. Concentrations beyond the maximum full-scale capability of the instrument or in excess of 30% LEL of the sample component require system modification. Similar modification may be necessary for sampling in oxygen-deficient atmospheres. This usually entails increasing the combustion air to the detector by sample dilution or by an independent air supply. A dilution system is the apparatus required to supply a filtered, controlled air supply for analyzers that use the sample gas stream as the source of combustion air. A dilution system can dilute a gas stream by ratios up to 100:1 through the selection of various critical orifices.

3.4. Postoperation

3.4.1. Field

A. When the activity is completed or at the end of the day, carefully clean the outside of the FID with a damp disposable towel to remove any visible dirt. Return the FID to a secure area and place on charge.

B. Ensure that all equipment is accounted for, decontaminated (see SOP 1.6, General Equipment Decontamination), and ready for shipment.

C. If necessary, make sure all survey or sampling locations are properly staked and that the location ID is readily visible on the location stake.

3.4.2. Documentation

A. Complete logbook entries, verify the accuracy of entries, and sign/initial all pages.

B. Review data collection forms for completeness.

3.4.3. Office

A. Deliver original forms and logbooks to the document control officer (with copies to the site manager and files) for eventual delivery to the Department of Energy.

B. Inventory equipment and supplies. Repair or replace all broken or damaged equipment. Replace expendable items. Return equipment to the equipment manager and report incidents of malfunction or damage.

C. Charge the instrument batteries.

D. If necessary, replenish supplies of the NBS traceable calibration gas.

4. SOURCES

Foxboro Analytical (A Division of The Foxboro Company). 1985. "Instruction and Service Manual, Century Systems Portable Organic Vapor Analyzer, Model OVA-128." New Haven, Connecticut.

CFR 49. 1985. Code of Federal Regulations, Title 49, U.S. Department of Transporatation, Parts 100-177. November 1, 1985. Washington, D.C.: U.S. Government Printing Office.

EPA. 1984. "Characterization of Hazardous Waste Sites - A Methods Manual: Volume II, Available Sampling Methods, Second Edition," U.S. Environmental Protection Agency document EPA-600/4-84-076, December 1984. Environmental Monitoring Systems Laboratory, Office of Research and Development, Las Vegas, Nevada,.

5. APPENDIXES

5.1. Comparison of the FID and PID

5.2. Relative Sensitivities of the FID to Some Common Organic Compounds

5.3. Equipment and Supplies Checklist

5.4. Flame Ionization Detector Field Data Form

5.5. Data Form Completion

5.6. Shipment of OVA-128 and Hydrogen Tank

APPENDIX 5.1

COMPARISON OF THE FID AND PID

	FID	PID
Response	Responds to many organic gases and vapors, especially low molecular weight hydrocarbons	Responds to many organic and some inorganic gases and vapors, especially heavy hydrocarbons.
Application	In survey mode, detects total concentrations of gases and vapors. In GC mode, identifies and measures specific compounds.	In survey mode, detects total concentrations of gases and vapors. Some identification of compounds possible if GC column and standards are used.
Limitations	Does not respond to gases and vapors with a higher ionization potential than the flame detector. No temperature control.	Does not respond to methane or aliphatic chlorinated solvents. Does not respond properly in the presence of water vapor or high humidity. Does not detect a compound if the probe (lamp) has a lower energy than the compound's ionization potential.
Calibration gas	Methane and others	Benzene (1,3-butadiene) and others
Ease of operation	Requires experience to interpret correctly, especially in GC mode.	Fairly easy to use and interpret. More difficult in the GC mode.
Detection limits	0.1 ppm (methane)	0.1 ppm (benzene), depends on lamp voltage.
Response time	2-3 sec (survey mode)	3 sec for 90% of total concentration

APPENDIX 5.1, Continued

	FID	PID
Maintenance	Periodically clean and inspect particle filters, valve rings, and burner chamber. Check calibration and pumping system for leaks. Recharge battery after each use.	Clean UV lamp frequently. Check calibration regularly. Recharge battery after each use.
Useful range	0-1000 ppm	0-2000 ppm
Service life	8 hrs; 3 hrs with strip chart recorder	10 hrs; 5 hrs with strip chart recorder

APPENDIX 5.2

RELATIVE SENSITIVITIES OF THE FID TO SOME COMMON ORGANIC COMPOUNDS

Compound	Relative Response
Methane	100
Ethane	90
Propane	64
n-Butane	61
n-Pentane	100
Ethylene	85
Acetylene	200
Benzene	150
Toluene	120
Acetone	100
Methyl ethyl ketone	80
Methl isobutyl ketone	100
Methanol	15
Ethanol	25
Isopropyl alcohol	65
Carbon tetrachloride	10
Chloroform	70
Trichloroethylene	72
Vinyl chloride	35

Source: Foxboro Analytical, 1985.

APPENDIX 5.3

EQUIPMENT AND SUPPLIES CHECKLIST

_____ Flame ionization detector (FID)

_____ Probe extension

_____ Operating manual

_____ Battery charger

_____ Spare batteries

_____ Jeweler's screwdriver for adjustments and calibration

_____ Refueling hose for hydrogen cylinder

_____ NBS traceable calibration gas

APPENDIX 5.4

FLAME IONIZATION DETECTOR FIELD DATA FORM

FLAME IONIZATION DETECTOR FIELD DATA

FACILITY CODE _____ LOG DATE _____

LOCATION ID _____ LOCATION TYPE _____

LOGGER CODE _____ FIELD REP _____

FLAME IONIZATION DETECTOR INSTRUMENT :

MANUFACTURER _____ MODEL _____

SERIAL NO _____

DATE/TIME CALIBRATED _____ ACCEPTANCE CODE _____

CALIBRATION GASES :	
TYPE/CYLINDER ID NO	CONCENTRATION (PPM)
1	1
2	2

COMMENTS _____

TIME (HH:MM)	SAMPLE ID	OBSERVED READING (ppm)					DRILLING DEPTH (FT)	COMMENTS
		DH	HS	BZ	D	OT		

ACCEPTANCE CODES: A–ACCEPTABLE R–RECONNAISSANCE U–UNACCEPTABLE N–NOT DETERMINED

LOCATION TYPES:		OBSERVED READING:	
BH – BOREHOLE	SB – SAMPLE BOTTLE	DH – DOWNHOLE	BZ – BREATHING ZONE
TP – TEST PIT	SL – SURFACE LOCATION	HS – HEADSPACE	D – DURING DRILLING (BZ)
SS – SOIL SAMPLE	WL – WELL		OT – OTHER
	OT – OTHER (EXPLAIN)		

COMPLETE BOLDED DATA FOR ENTRY INTO TIMS
FID–048 (1/88)

_____ FORM COMPLETED BY/DATE

_____ TECHNICAL REVIEWER/DATE

APPENDIX 5.5

DATA FORM COMPLETION

Use a pen with black ink that is not water soluble (not a felt-tip pen). Make an entry in each blank. Where there is no data entry, enter UNK for Unknown, NA for Not Applicable, or ND for Not Done. If any procedure was not performed as prescribed, give the reason for the change or omission on the form. To change an entry, draw a single line through it, add the correct information above it, and initial the change.

FLAME IONIZATION DETECTOR FIELD DATA FORM

1. Facility Code. Five-character code abbreviating the facility name where program activity is being conducted. The first three characters indicate the facility, and the remaining two numbers designate the specific site within the facility.

2. Log Date. The date the information recorded on the form was obtained in the format DD-MMM-YY (01-JAN-88).

3. Location ID. Four-character code assigned sequentially to each borehole, test pit, or surface location where physical, chemical, biological, radiological, and other measurements are taken.

4. Location Type. Two-character code identifying where the samples were taken. There is one location type for each location ID. Location types include those listed below.

   BH--Borehole

   TP--Test Pit

   SL--Surface Location

   WL--Well

   SB--Sample Bottle

   SS--Soil Sample

   OT--Other (explain)

5. Logger Code. Three-character or four-character code identifying the company responsible for collecting the information recorded on the form.

6. Field Rep. The name of the field representative.

7. Manufacturer. Manufacturer's name on flame ionization detector (FID) instrument used.

8. Model. Model of FID instrument.

9. Serial No. Serial No. of FID instrument.

10. Date/Time Calibrated. The day and time when the FID instrument was calibrated. Calibration should be performed daily.

11. Acceptance Code. One- character code assigned by the site manager.

12. Calibration Gases

    a. Type/Cylinder ID No. The identification of the calibration gas and the lot number on the cylinder.

    b. Concentration (ppm). The concentration of the calibration gas in parts per million (ppm).

13. Comments. Any additional information.

14. Time (HH:MM). Time when a field measurement was taken in the 24-hr clock format of hours:minutes (for example, 08:37 for 8:37 a.m. and 19:12 for 7:12 p.m.)

Conversion Table

Conventional Time	24-Hr Time
1:00 a.m.	1:00
12:00 Noon	2:00
1:00 p.m.	13:00
2:00 p.m.	14:00
3:00 p.m.	15:00
4:00 p.m.	16:00
5:00 p.m.	17:00
6:00 p.m.	18:00
7:00 p.m.	19:00
8:00 p.m.	20:00
9:00 p.m.	21:00
10:00 p.m.	22:00
11:00 p.m.	23:00
12:00 Midnight	24:00

15. Sample ID. When samples are being taken while FID monitoring is being performed, the identification number or code assigned to a particular sample like 01 is correlated with the observed readings and appropriate drilling depth if drilling is being performed. This is useful in selecting samples for analyses and in the correlation of laboratory data with FID measurements.

16. Observed Reading (ppm). FID reading at the respective location ID in the units indicated on the meter. When the calibration gas and the gas being measured for the environment are the same, the meter reads in parts per million. Measurements can be made in the breathing zone, downhole, at the headspace, or other specified locations.

17. Drilling Depth (Ft). FID monitoring is performed every 5 ft during any type of drilling. The depth of the drilling is listed in feet and can be given as the most recent interval (like 5-10) or as the ending depth (like 10).

18. Comments. Any additional information, such as type of gas being measured, if this determination can be made (for example, by labels on drums).

APPENDIX 5.6

SHIPMENT OF OVA-128 AND HYDROGEN TANK

An organic vapor analyzer (OVA) is typically shipped with a charged cylinder and a supplementary hydrogen tank to a hazardous waste site as part of the safety monitoring requirements for site characterization. The OVA and the hydrogen tank must be shipped so as to protect their integrity and to protect against potential damage or injury that may be caused from leakage/breakage of the equipment. Regulations addressing the packaging, labeling, and shipping of an OVA and a hydrogen tank are described in 49 CFR Parts 171-178.

The packaging and labeling requirements for shipment of the OVA and the hydrogen tank are summarized in the following paragraphs.

A. Organic Vapor Analyzer

The OVA must be placed in its own case or in a box to minimize damage during handling and transportation. The following labels must be placed on the container before shipping.

1. A Flammable Gas label (red and white label)

2. A Danger label (orange and black label)

3. A label no smaller than 1 inch along each dimension with Hydrogen clearly written on it

4. A label stating Inside Packages Comply with Prescribed Specifications

Personnel engaged in shipping OVAs must note that a U.S. DOT exemption is applicable to the shipment of the OVA and must be attached to the shipping papers. In addition, personnel should note that it is preferable to transport all hazardous materials on cargo aircraft (for example, Emory or Federal Express).

B. Hydrogen Tank

The hydrogen tank must be secured with a safety cap. Because the tank needs to be shipped in a vertical position (safety cap on the up end), personnel may package the tank in a box for stability and further security. It should be noted that the hydrogen tank may be shipped without a box as long as the tank can remain in an upright position. If the hydrogen tank is packaged in a box, the shipper must ensure that the box has been securely taped. The following labels must be placed on the tank or container before shipping. Personnel involved in shipping hydrogen tanks must note that hydrogen tanks cannot be shipped by passenger aircraft or rail.

1. A Flammable Gas label (red and white label)

2. A Danger label (orange and black label)

3. A label no smaller than 1 inch with UN1049 clearly written on it

4. A label no smaller than 1 inch with Hydrogen clearly written on it

5. Labels with This End Up on the container or tank point pointing toward the safety cap

6. A Cargo Aircraft Only label

7. A label stating Inside Packages Comply with Prescribed Specifications

STANDARD OPERATING PROCEDURE 6.4

TOTAL ALPHA SURFACE CONTAMINATION MEASUREMENTS

1. PURPOSE

To provide guidance for determining levels of total surface alpha contamination on equipment, vehicles, and personnel that have been in contact with material that was potentially contaminated with alpha-emitting radionuclides.

2. DISCUSSION

The Remedial Investigation Plan (RIP) provides information on the scope of a given operation, related health and safety requirements, and the applicability of this procedure to the activities.

Equipment and vehicles must be monitored for contamination before release from radiologically controlled areas for unrestricted use. Levels of alpha contamination on equipment will be determined and compared to release criteria in draft DOE Order 5480.11 that are taken from the U.S. Nuclear Regulatory Commission Regulatory Guide 1.86. The limit for alpha activity applies to natural uranium, U-235, U-238, and associated decay products and is 5000 disintegrations per minute (dpm)/100 cm^2 averaged over 1 m^2 or 15,000 dpm/100 cm^2, not to exceed an area of 100 cm^2. Limits for other radionuclides apply to alpha, beta, and gamma radiations, and some are set below the detection limits for portable instruments. As a result, the applicable release criterion for alpha contamination is the minimum detectable activity above background as measured by a direct-reading alpha scintillation detector with a minimum $2\upsilon\tau\pi$ efficiency of 20%. This measurement typically equals about 350 dpm/100 cm^2. Equipment must be decontaminated to levels that are as low as reasonably achievable and below the applicable release criterion in all cases. Personnel must be monitored for contamination before leaving a controlled area and decontaminated to the lowest reasonably achievable levels.

High-voltage plateau curves and National Bureau of Standards (NBS) traceable source calibrations must be performed on the detector semiannually to ensure proper operation. Alpha detector counting efficiencies must be determined daily before using the instrument for contamination monitoring. The counting efficiency also must be determined following any adjustments or repairs on the instrument. The counting efficiency is used to convert instrument readings to a measure of activity in units of dpm per 100 cm^2.

3. PROCEDURE

3.1. Associated Procedures

Information that applies to most field activities is provided in SOPs 1.1-1.10. In addition to the RIP, those SOPs provide guidance that may supplement the information in this procedure. They should be consulted as necessary to obtain specific information about equipment and supplies; sample collection, preservation, packaging, and shipping; decontamination procedures; and documentation requirements. Procedures directly associated with this SOP are listed below.

SOP No.	SOP Title
1.1	General Instructions for Field Personnel
1.6	General Equipment Decontamination
1.7	Sampling for Removable Alpha Contamination
6.11	Beta-Gamma Radiation Measurements Using a Geiger-Mueller Detector

3.2. Preparation

3.2.1. Office

A. Review the RIP and SOPs listed in Section 3.1.

B. Coordinate schedules/actions with the installation staff.

C. Obtain appropriate permission for property access.

D. Assemble the equipment and supplies listed in Appendix 5.1. Ensure the proper operation of all field equipment. Ensure that the alpha scintillator and the ratemeter/scaler have current calibrations.

3.2.2. Documentation

A. Obtain a logbook from the QA officer.

B. Record results of the equipment check in the logbook.

C. Obtain a sufficient number of the appropriate ER Program data collection forms (see INDEX TO SOPs).

D. Consult the ER Program data administrator for a current list of codes used in the completion of data forms.

3.2.3. Field

A. Complete the Daily Alpha Efficiency Check form (Appendix 5.2) by following instructions in Appendix 5.4, Data Form Completion.

B. Perform a daily 10-min background count and a 1-min alpha source count during use and record the results on the Daily Alpha Efficiency Check form. To perform a background count, place the probe on a clean, uncontaminated surface and record the number of counts accumulated over a period of 10 min. To perform a check source count, place the alpha source in the detector tray or against the detector surface and record the number of counts accumulated per minute (cpm).

C. Calculate the counting efficiency (E) using the formula shown below.

$$E = \frac{(\text{source cpm}) - (\text{background cpm})}{(\text{source dpm})}$$

D. While counting samples or performing surveys, the alpha probe may be contaminated, causing the background count rate to increase. If this is suspected, repeat the 10-min background count. If the background count rate is more than 50% above the average value, the detector should be cleaned.

3.3 Operation

3.3.1 Total Alpha Survey

A. Complete the Total Alpha Contamination Survey Data form by following instructions in Appendix 5.4, Data Form Completion.

B. List the items to be surveyed in the first column on the form. Items must be identified as specifically as possible with serial numbers, model numbers, license numbers, or other forms of unique descriptions. If the items to be surveyed need to be labeled with the assigned identification number, use an indelible marker, spray paint, or some type of permanent marker. Use a separate line of the form to list each area surveyed on the items.

C. List the surveyor's name, date of survey, and identification number of the monitoring instrument/detector.

D. Switch the instrument on, check the batteries for adequate power, and check the instrument for damage. Record the instrument daily background, efficiency, and calibration factor in the appropriate spaces. The instrument background and efficiency should be determined at least once during each operational day.

E. Monitor potentially contaminated surfaces by passing the probe face along each surface at a rate of 5 cm/sec or less. Without touching it, hold the probe face as close as possible to the surface being monitored and not more than 0.5 cm away. Be careful not to damage the Mylar face of the probe. Hold the probe steady at any area that appears to indicate an elevated reading. Record the highest reading for each separate area of the item monitored, listing a description of each area in the space provided under the first column.

F. When monitoring potentially contaminated skin and clothing surfaces, hold the probe face as close as possible to the surface being monitored, no more than 0.5 cm away. Move the probe along the surface at a rate of 5 cm/sec or less. At a minimum, monitor the areas listed below.

   1. Both sides of each hand

   2. Tops, sides, and bottoms of shoes or boots

   3. The torso of the body, both front and back

   4. All loose equipment (for example, papers, clipboards, and hand-carried tools)

G. Instrument readings will fluctuate during monitoring. Investigate any significant elevation of the meter reading by holding the meter in the suspected area. A noticeable elevation in the meter reading identifies contamination that may need to be removed.

H. Multiply each instrument reading (cpm) by the calibration factor to obtain the contamination level in dpm/100 cm^2.

I. If natural uranium, U-235, U-238, and associated decay products are the only contaminants present and the results of the survey for total alpha contamination are below the applicable release criterion for removable contamination (1000 dpm/100 cm^2), the item may be released without a survey for removable alpha contamination. If the total alpha activity is above the release criterion for removable contamination, perform the swipe or smear survey procedure. See SOP 1.7, Sampling for Removable Alpha Contamination.

J. Wash contaminated skin and equipment with water and soap. Contaminated clothing may be removed and laundered at an appropriate facility.

K. Give the survey results to the personnel responsible for releasing equipment. Equipment that fails to meet the release limits must undergo additional decontamination according to SOP 1.6, General Equipment Decontamination, and must be resurveyed.

3.4. Postoperation

3.4.1. Field

A. Turn the power off.

B. Ensure that all equipment is accounted for, decontaminated (see SOP 1.6, General Equipment Decontamination), and ready for shipment.

3.4.2. Documentation

A. Record any uncompleted work (like additional monitoring) in the logbook.

B. Complete logbook entries, verify the accuracy of entries, and sign/initial all pages.

C. Review data collection forms for completeness.

3.4.3. Office

A. Deliver original forms and logbooks to the document control officer (with copies to the site manager and files) for eventual delivery to the Department of Energy.

B. Inventory equipment and supplies. Repair or replace all broken or damaged equipment. Replace expendable items. Return equipment to the equipment manager and report incidents of malfunction or damage.

4. SOURCE

NRC. 1974. Regulatory Guide 1.86, "Termination of Operating Licenses for Nuclear Reactors." U. S. Regulatory Commission, Washington, D.C.: U.S. Government Printing Office.

5. APPENDIXES

5.1. Equipment and Supplies Checklist

5.2. Daily Alpha Efficiency Check Form

5.3. Total Alpha Contamination Survey Data Form

5.4. Data Form Completion

APPENDIX 5.1

EQUIPMENT AND SUPPLIES CHECKLIST

_____ Alpha scintillation probe (Ludlum 43-5 or the equivalent)

_____ Ratemeter/scaler (Ludlum Model 3 or the equivalent)

_____ Alpha check source (Am-241 or the equivalent)

_____ Data forms

_____ Voltage meter

_____ Hand-held calculator

_____ Tape measure

APPENDIX 5.2

DAILY ALPHA EFFICIENCY CHECK FORM

DAILY ALPHA EFFICIENCY CHECK

FACILITY CODE _____ FIELD REP _____

LOGGER CODE _____ ACCEPTANCE CODE _____

RATEMETER/SCALER:

MODEL NO _____ SERIAL NO _____ CALIBRATION DATE _____

WINDOW OUT THRESHOLD _____ HIGH VOLTAGE _____ BATTERY _____

ALPHA SCINTILLATION PROBE:

MODEL NO _____ SERIAL NO _____ CALIBRATION DATE _____

SOURCE:

SERIAL NO _____ ISOTOPE _____ ACTIVITY _____ DPM

LOG DATE	TIME (HH:MM)	COUNTING TIME (MIN)	BACKGROUND CPM	GROSS COUNTS	GROSS CPM	NET CPM	EFFICIENCY (NET CPM/DPM)

ACCEPTANCE CODES: A—ACCEPTABLE R—RECONNAISSANCE U—UNACCEPTABLE N—NOT DETERMINED

COMPLETE BOLDED DATA FOR ENTRY INTO TMS
DAE-165 (3/88)

_____ FORM COMPLETED BY/DATE

_____ TECHNICAL REVIEWER/DATE

APPENDIX 5.3

TOTAL ALPHA CONTAMINATION SURVEY DATA FORM

TOTAL ALPHA CONTAMINATION SURVEY DATA

FACILITY CODE _____ LOG DATE _____

LOGGER CODE _____ FIELD REP _____

RATEMETER/SCALER: ACCEPTANCE CODE _____

MODEL NO _____ SERIAL NO _____ CALIBRATION DATE _____

WINDOW OUT THRESHOLD _____ HIGH VOLTAGE _____ BATTERY _____

ALPHA PROBE:

MODEL NO _____ SERIAL NO _____ EFFICIENCY _____ CPM/DPM

PROBE FACE AREA[1] _____ CALIBRATION FACTOR[2] _____ (DPM/100cm²)/CPM

ITEM SURVEYED (SPECIFY)	GROSS COUNTS	COUNT TIME	NET CPM	CONTAMINATION[3] LEVEL (IN DPM/100cm²)	MEETS RELEASE LIMIT (YES/NO)	SWIPE NECESSARY (YES/NO)

1 LUDLUM MODEL 43-1 PROBE FACE AREA = 78.5cm² LUDLUM MODEL 43-5 PROBE FACE AREA = 83 cm²

2 CALIBRATION FACTOR = (100/PROBEFACE AREA (cm²))/EFFECIENCY(CPM/DPM)

3 CONTAMINATION LEVEL = (NET CPM)(CALIBRATION FACTOR)

ACCEPTANCE CODES: A-ACCEPTABLE R-RECONNAISSANCE U-UNACCEPTABLE N-NOT DETERMINED

COMPLETE BOLDED DATA FOR ENTRY INTO TMS
TAC-120 (3/88)

FORM COMPLETED BY/DATE _____ TECHNICAL REVIEWER/DATE _____

APPENDIX 5.4

DATA FORM COMPLETION

Use a pen with black ink that is not water soluble (not a felt-tip pen). Make an entry in each blank. Where there is no data entry, enter UNK for Unknown, NA for Not Applicable, or ND for Not Done. If any procedure was not performed as prescribed, give the reason for the change or omission on the form. To change an entry, draw a single line through it, add the correct information above it, and initial the change.

DAILY ALPHA EFFICIENCY CHECK

1. Facility Code. Five-character code abbreviating the facility name where program activity is being conducted. The first three characters indicate the facility, and the remaining two numbers designate the specific site within the facility.

2. Field Rep. The name of the field representative.

3. Logger Code. Three-character or four-character code identifying the company responsible for collecting the information recorded on the form.

4. Acceptance Code. One-character code assigned by the site manager.

5. Ratemeter/Scaler Model No. The model number of the ratemeter/scaler.

6. Ratemeter/Scaler Serial No. The serial number of the ratemeter/scaler.

7. Ratemeter/Scaler Calibration Date. The date when the ratemeter/scaler was last calibrated.

8. Window. The window is in the out position unless otherwise specified.

9. Threshold. The adjustment for the lower energy level of the discriminator shown on the calibration sticker.

10. High Voltage. The voltage that is applied to the alpha scintillation probe shown on the calibration sticker. This voltage is determined semiannually using a voltage plateau.

11. Battery. The battery voltage reading at the beginning of the measurement.

12. Alpha Scintillation Probe Model No. The model number of the alpha detector probe.

13. Alpha Scintillation Probe Serial No. The serial number of the alpha probe.

14. Alpha Scintillation Probe Calibration Date. The date the probe was last calibrated.

15. Source Serial No. The serial number of the radiation source.

16. Source Isotope. The identity of the radioactive isotope contained in the source given as element and mass number, like Am-241.

17. Source Activity. The activity of the radioactive source in disintegrations per minute (dpm). If the check source activity is given in microcuries (μCi), it can be converted to dpm using 1 μCi = 2.22×10^6 dpm.

18. Log Date. The date the information recorded on the form was obtained in the format DD-MMM-YY (01-JAN-88).

19. Time (HH:MM). The time the efficiency was determined using the 24-hr clock in the format hours:minutes.

20. Counting Time (Min). The time in minutes over which the scaler counts. Enter N/A if using a ratemeter.

21. Background cpm. The count rate with no source present.

22. Gross Counts. The number of pulses recorded by the scaler during the counting time. Enter N/A if using a ratemeter.

23. Gross cpm. The count rate with the source present given in pulses per minute.

24. Net cpm. Net counts per minute (cpm) equals gross cpm minus background cpm.

25. Efficiency (Net cpm/dpm). The ratio of the observed count rate to the true disintegration rate.

$$\text{Efficiency} = \frac{\text{Net cpm}}{\text{Source dpm}}$$

APPENDIX 5.4, Continued

TOTAL ALPHA CONTAMINATION SURVEY DATA FORM

1. Facility Code. Five-character code abbreviating the facility name where program activity is being conducted. The first three characters indicate the facility, and the remaining two numbers designate the specific site within the facility.

2. Log Date. The date the information recorded on the form was obtained in the format DD-MMM-YY (01-JAN-88).

3. Logger Code. Three-character or four-character code identifying the company responsible for collecting the information recorded on the form.

4. Field Rep. The name of the field representative.

5. Acceptance Code. One-character code assigned by the site manager.

6. Ratemeter/Scaler Model No. The model number of the ratemeter/scaler.

7. Ratemeter/Scaler Serial No. The serial number of the ratemeter/scaler.

8. Ratemeter/Scaler Calibration Date. The date when the ratemeter/scaler was last calibrated.

9. Window. The window will be in the out position unless otherwise specified.

10. Threshold. The adjustment for the lower energy level of the discriminator shown on the calibration sticker.

11. High Voltage. The voltage applied to the alpha detector shown on the calibration sticker.

12. Battery. The battery voltage reading at the beginning of the measurement.

13. Alpha Probe Model No. The model number of the alpha detector probe.

14. Alpha Probe Serial No. The serial number of the alpha detector probe.

15. Alpha Probe Efficiency. The ratio of observed net count rate to the known disintegration rate of the check source from the Daily Alpha Efficiency Check form (Appendix 5.2).

16. Probe Face Area. The surface area of the Mylar window on the alpha scintillation detector in square cm. Values for Ludlum Models 43-1 and 43-5 are listed at the bottom of the form.

17. Calibration Factor. Factor that takes the detector efficiency and surface area into account to convert from cpm to dpm per 100 cm^2. The calibration factor in (dpm/100cm^2)/cpm equals (100/Probe Face Area in cm^2)/efficiency in cpm/dpm.

18. Item Surveyed (Specify). A description or identification number of the article surveyed. A separate line on the form is used to list and describe each area to be surveyed on the article.

19. Gross Counts. The total counts collected during the counting period.

20. Count Time. The time (in minutes) during which the counts were collected.

21. Net cpm. Gross count cpm minus background cpm.

22. Contamination Level (in dpm/100cm^2). This is calculated by multiplying the net cpm by the calibration factor.

    Contamination level = (Net cpm) (Calibration Factor)

23. Meets Release Limit (Yes/No). If the contamination level is greater than the applicable release limit, a no is written here. If the contamination level is less than the release limit, a yes is written here.

24. Swipe Necessary (Yes/No). If the total alpha contamination level exceeds the applicable removable contamination criteria, a swipe must be performed to determined the activity contribution of fixed and loose contamination.

STANDARD OPERATING PROCEDURE 6.5

SCREENING SOIL SAMPLES FOR ALPHA EMITTERS

1. PURPOSE

To provide a method of screening for alpha-emitting radionuclides in soil samples.

2. DISCUSSION

The Remedial Investigation Plan (RIP) provides information about the scope of specific operations and the applicability of this procedure to the activities.

Soil samples that are collected in areas where alpha-emitting radionuclides may exist must be monitored before releasing them for laboratory analysis. No regulatory *de minimis* level has been established to designate material that contains a negligible concentration of radioactive material. This procedure compares the measurement result to background and establishes the average background value plus 3 standard deviations of the background as the criterion above which samples are considered contaminated.

The instrument used is a portable ZnS alpha detector having an efficiency of at least 15%. The minimum detectable gross-alpha activity for this method is about 50 picoCuries per gram (pCi/g).

3. PROCEDURE

3.1. Associated Procedures

Information that applies to most field activities is provided in SOPs 1.1-1.10. In addition to the RIP, those SOPs provide guidance that may supplement the information in this procedure. They should be consulted as necessary to obtain specific information about equipment and supplies; sample collection, preservation, packaging, and shipping; decontamination procedures; and documentation requirements. Procedures directly associated with this SOP are listed below.

SOP No.	SOP Title
1.1	General Instructions for Field Personnel
1.6	General Equipment Decontamination

3.2. Preparation

3.2.1. Office

A. Review the RIP and SOPs listed in Section 3.1.

B. Coordinate schedules/actions with the installation staff.

C. Obtain appropriate permission for property access.

D. Assemble the equipment and supplies listed in Appendix 5.1. Check the calibration of the alpha scintillation probe and scaler.

3.2.2. **Documentation**

A. Obtain a logbook from the QA officer.

B. Record the results of the calibration in the logbook.

C. Obtain a sufficient number of the appropriate ER Program data collection forms (see INDEX TO SOPs).

D. Consult the ER Program data administrator for a current list of information management codes, location IDs, and sample numbers used in the completion of data forms.

3.2.3. **Field**

A. Turn the instrument power switch to on and check the batteries for adequate power.

B. Perform a source check of the instrument using the procedures outlined below.

1. Count the check source for 1 min to obtain the gross counts per minute (cpm).

2. Perform a 10-min background count. Divide the resulting counts by 10 to obtain background cpm. This count rate should be low, about 1.0 cpm for the Ludlum 43-1 probe. Any significant increase in this count rate may mean that the instrument or work area needs to be decontaminated.

3. Determine the efficiency as described in Appendix 5.4, Data Form Completion. The efficiency for the Ludlum 43-1 probe should be approximately 17%. A significant decrease or increase in the efficiency can suggest a malfunction and should be investigated.

$$\text{Efficiency} = \frac{\text{counts per minute (cpm)}}{\text{disintegrations per minute (dpm)}}$$

3.3. **Operation**

3.3.1 **Background Samples**

To provide a statistical basis for evaluating sample alpha-count data as a function of background alpha-count data, 5 background soil samples will be taken, prepared, and counted. The average and standard deviation of the background alpha count are then determined. Samples subsequently counted with a 10-min count greater than the average background plus 3 standard deviations of the background will be considered contaminated.

A. Collect a small aliquot of soil at 5 locations that have been determined to be in background areas of the installation. Using the small trowel, place the soil in

double plastic sandwich bags. Seal the bags and thoroughly mix the material so that all large clods are broken.

B. When the sample appears to be uniformly mixed, transfer it into the bottom of a clean petri dish and place it under the heat lamp to dry. Make sure there is enough sample so that it will mound over the flange of the petri dish when it is dry.

C. When the sample is dry, use the lid of the petri dish to press down on the top of the sample and smooth out the surface until it is flush with the top of the container. Discard the petri dish lid into a depository for contaminated waste.

D. Count the sample for 10 min.

E. Record the accumulated counts on the Gross Alpha Screening Field Log--Background Evaluation form (Appendix 5.2) as directed in Appendix 5.4, Data Form Completion.

F. Calculate the background mean and standard deviation as described in Appendix 5.4.

3.3.2. Alpha Counting of Soil Samples

A. Turn on the instrument and perform a source check as described in Section 3.2.3. A source check should be performed daily.

B. Collect a small amount of soil from the locations described in the RIP. Each sample should be collected, processed, and otherwise handled according to the methods described in Section 3.3.1, steps A-C.

C. Count the sample for 10 min. Record the accumulated counts on the Gross Alpha Screening Field Log form (Appendix 5.3) as described in Appendix 5.4.

D. Compare the sample counts with the average background count plus 3 standard deviations of the background count. If the former count data are greater than the latter, the sample is considered contaminated (Y). If the counts are less, the sample is not considered contaminated (N).

3.4. Postoperation

3.4.1. Field

A. Ensure that the lab or work area is free of residual soil/waste material by monitoring with the alpha detector. Wipe work areas clean and dispose of waste in a designated radioactive waste container.

B. Turn the power switch on the ratemeter/scaler to the off position.

C. Place the protective cover on the alpha scintillator probe.

D. Turn the power switch on the heat lamp to the off position.

E. Ensure that all equipment is accounted for, decontaminated (see SOP 1.6, General Equipment Decontamination), and ready for shipment.

F. If necessary, make sure all survey or sampling locations are properly staked and the location ID number is readily visible on the location stake.

3.4.2. Documentation

A. Complete logbook entries, verify the accuracy of entries, and sign/initial all pages.

B. Review data collection forms for completeness.

3.4.3. Office

A. Deliver original forms and logbooks to the document control officer (with copies to the site manager and files) for eventual delivery to the Department of Energy.

B. Inventory equipment and supplies. Repair or replace all broken or damaged equipment. Replace expendable items. Return equipment to the equipment manager and report incidents of malfunction or damage.

4. SOURCES

Ludlum. 1986. Model 43-1 "Instruction Manual, Alpha Scintillator." Ludlum Measurements, Inc., January 1986. Sweetwater, Texas.

Ludlum. 1982. "Instruction Manual, Model 2220 Portable Scaler." Ludlum Measurements, Inc., April 1982. Sweetwater, Texas.

5. APPENDIXES

5.1. Equipment and Supplies Checklist

5.2. Gross Alpha Screening Field Log--Background Evaluation Form

5.3. Gross Alpha Screening Field Log Form

5.4. Data Form Completion

APPENDIX 5.1

EQUIPMENT CHECKLIST

_____ Ludlum model 43-1 alpha scintillation probe or equivalent

_____ Ludlum model 2220 portable scaler or equivalent

_____ Plastic petri dishes (1.5 cm high, 10 cm in diameter, volume of 117 cm^3)

_____ Mylar film having thickness of 100 $\mu g/cm^2$

_____ Thick, plastic sandwich bags

_____ Heat lamp

_____ Small trowel

_____ Paper towels

_____ Alpha check source

_____ Hand-held calculator

APPENDIX 5.2

GROSS ALPHA SCREENING FIELD LOG--BACKGROUND EVALUATION FORM

GROSS ALPHA SCREENING FIELD LOG – BACKGROUND EVALUATION

FACILITY CODE _____ **LOG DATE** _____

LOGGER CODE _____ FIELD REP _____

RATEMETER/SCALER: **ACCEPTANCE CODE** _____

MODEL NO _____ SERIAL NO _____ CALIBRATION DATE _____

WINDOW OUT THRESHOLD _____ HIGH VOLTAGE _____ BATTERY _____

PROBE:

MODEL NO _____ SERIAL NO _____ CALIBRATION DATE _____

CHECK SOURCE:

ISOTOPE _____ ACTIVITY _____ DPM SERIAL NO _____

METER READING _____ COUNTS/ _____ MIN = _____ CPM

EFFICIENCY _____ CPM/ _____ DPM = _____ CPM/DPM

COMMENTS _____

LOCATION ID OR DESCRIPTION	COORDINATES (FT)		SAMPLE ID	SAMPLE COUNTS (Counts Per 10 Minutes)
	NORTH	EAST		

MEAN = $\bar{X}$ = _____

STANDARD DEVIATION = $SD\bar{X} = (\frac{\bar{X}}{N})^{1/2}$ = _____

ACCEPTANCE CODES: A–ACCEPTABLE R–RECONNAISSANCE U–UNACCEPTABLE N–NOT DETERMINED

COMPLETE BOLDED DATA FOR ENTRY INTO TMS
GAS-108 (2/88)

_____ FORM COMPLETED BY/DATE

_____ TECHNICAL REVIEWER/DATE

APPENDIX 5.3

GROSS ALPHA SCREENING FIELD LOG FORM

GROSS ALPHA SCREENING FIELD LOG PAGE 1 OF ____

FACILITY CODE _____ LOGGER CODE _____

LOG DATE _____ FIELD REP _____

ACCEPTANCE CODE _____

RATEMETER/SCALER:

MODEL NO _____ SERIAL NO _____ CALIBRATION DATE _____

WINDOW OUT THRESHOLD _____ HIGH VOLTAGE _____ BATTERY _____

PROBE:

MODEL NO _____ SERIAL NO _____ CALIBRATION DATE _____

CHECK SOURCE:

ISOTOPE _____ ACTIVITY _____ DPM SERIAL NO _____

SOURCE CHECK

METER READING _____ COUNTS/_____ MIN = _____ CPM

EFFICIENCY _____ CPM/_____ DPM = _____ CPM/DPM

AVERAGE BACKGROUND COUNT ($\bar{X}$)+3 STANDARD DEVIATIONS 3(SD$\bar{X}$)= _____

COMMENTS _____

LOCATION ID	COORDINATES (FT)		SAMPLE ID	SAMPLE COUNT	ABOVE CRITERIA? YES(Y) OR NO(N)
	NORTH	EAST			

ACCEPTANCE CODES: A—ACCEPTABLE R—RECONNAISSANCE U—UNACCEPTABLE N—NOT DETERMINED

COMPLETE SHADED DATA FOR ENTRY INTO TIMS
GAS-100 (12/88)

FORM COMPLETED BY/DATE _____ TECHNICAL REVIEWER/DATE _____

GROSS ALPHA SCREENING FIELD LOG

PAGE ____ OF ____

FACILITY CODE _____ LOGGER CODE _____

LOG DATE _____ FIELD REP _____

LOCATION ID	COORDINATES (FT)		SAMPLE ID	SAMPLE COUNT	ABOVE CRITERIA? YES(Y) OR NO(N)
	NORTH	EAST			

COMPLETE BOLDED DATA PER ENTRY INTO TMS
GAS-106 (3/88)

APPENDIX 5.4

DATA FORM COMPLETION

Use a pen with black ink that is not water soluble (not a felt-tip pen). Make an entry in each blank. Where there is no data entry, enter UNK for Unknown, NA for Not Applicable, or ND for Not Done. If any procedure was not performed as prescribed, give the reason for the change or omission on the form. To change an entry, draw a single line through it, add the correct information above it, and initial the change.

GROSS ALPHA SCREENING FIELD LOG--BACKGROUND EVALUATION FORM

1. Facility Code. Five-character code abbreviating the facility name where program activity is being conducted. The first three characters indicate the facility, and the remaining two numbers designate the specific site within the facility.

2. Log Date. The date the information recorded on the form was obtained in the format DD-MMM-YY (01-JAN-88).

3. Logger Code. Three-character or four-character code identifying the company responsible for collecting the information recorded on the form.

4. Field Rep. The name of the field representative.

5. Acceptance Code. One-character code assigned by the site manager.

6. Ratemeter/Scaler Model No. The model number of the ratemeter/scaler.

7. Ratemeter/Scaler Serial No. The serial number of the ratemeter/scaler.

8. Ratemeter/Scaler Calibration Date. The date when the ratemeter/scaler was last calibrated.

9. Window. The window will be in the out position unless otherwise specified.

10. Threshold. The adjustment for the lower energy level of the discriminator given on the calibration sticker.

11. High Voltage. The voltage that is applied to the detector given on the calibration sticker.

12. Battery. The battery voltage reading at the beginning of the measurement.

13. Probe Model No. The model number of the alpha scintillation probe.

14. Probe Serial No. The serial number of the alpha scintillation probe.

15. Probe Calibration Date. The date when the alpha scintillation probe was last calibrated.

16. Check Source Isotope. The radioactive isotope contained in the check source given as element and mass number, like Th-230.

17. Check Source Activity. The activity of the radioactive check source in disintegrations per minute (dpm). An activity given in microcuries (μCi) can be converted to dpm using 2.22×10^6 dpm = 1 (μCi).

18. Check Source Serial No. The serial number of the radiation check source.

19. Check Source Meter Reading. The results of a count on the check source. Check Source data consists of three fields: total counts, count time in minutes, and count rate in counts per minute (cpm).

20. Check Efficiency. The ratio of the observed count rate (cpm) to the true disintegration rate (dpm) of the check source.

    Efficiency = cpm/dpm

21. Comments. Any additional information.

22. Location ID (or Description). Four-character code assigned sequentially to each borehole, test pit, or surface location where physical, chemical, biological, radiological, and other measurements are taken.

23. Coordinates (Ft). The location where the sample was collected relative to the survey grid in feet. There are two fields in the coordinate description, north and east.

24. Sample ID. The identifying code or number given to the sample.

25. Sample Counts (Counts Per 10 Min). The count obtained on the soil sample in counts per 10 min.

26. Mean (M). The average count obtained for the background samples. The mean is calculated as shown below.

$$X = \frac{x_1 + x_2 + x_3 + x_4 + x_5}{N}$$

where,

X = mean

N = number of background measurements

$x_1 + x_2 + x_3 + x_4 + x_5$ = summation of all background counts

27. Standard Deviation (SDX). The standard deviation of the mean is calculated as shown below.

$$SDX = (X/N)^{1/2} = (X/5)^{1/2}$$

where,

N = the number of samples = 5

X = the mean

GROSS-ALPHA SCREENING FIELD LOG FORM

1. Facility Code. Five-character code abbreviating the facility name where program activity is being conducted. The first three characters indicate the facility, and the remaining two numbers designate the specific site within the facility.

2. Logger Code. Three-character or four-character code assigned by the site manager.

3. Log Date. The date the information recorded on the form was obtained in the format DD-MMM-YY (01-JAN-88).

4. Field Rep. The name of the field representative.

5. Acceptance Code. One-character code assigned by the site manager.

6. Ratemeter/Scaler Model No. The model number of the ratemeter/scaler.

7. Ratemeter/Scaler Serial No. The serial number of the ratemeter/scaler.

8. Ratemeter/Scaler Calibration Date. The date when the ratemeter/scaler was last calibrated.

9. Window. The window will be in the out position unless otherwise specified.

10. Threshold. The adjustment for the lower energy level of the discriminator given on the calibration sticker.

11. High Voltage. The voltage that is applied to the detector given on the calibration sticker.

12. Battery. The battery voltage reading at the beginning of the measurement.

13. Probe Model No. The model number of the alpha scintillation probe.

14. Probe Serial No. The serial number of the alpha scintillation probe.

15. Probe Calibration Date. The date when the alpha scintillation probe was calibrated.

16. Check Source Isotope. The radioactive isotope contained in the check source given as element and mass number, like Th-230.

17. Check Source Activity. The activity of the radioactive check source in disintegrations per minute (dpm). An activity given in microcuries (μCi) can be converted to dpm using 2.22×10^6 dpm = 1 μCi.

18. Check Source Serial No. The serial number of the radiation check source.

19. Source Check Meter Reading. The results of a count on the check source. Check source data consists of three fields: total counts, count time in minutes, and count rate in counts per minute (cpm).

20. Source Check Efficiency. The ratio of the observed count rate (cpm) to the true disintegration rate (dpm) of the check source.

    Efficiency = cpm/dpm

21. Average Background Count plus 3 Standard Deviations. This quantity has been derived from counts on background samples. See entries 26 and 27 of this appendix (Gross Alpha Screening Field Log--Background Evaluation form) for these calculations.

22. Comments. Any additional information.

23. Location ID. Four-character code assigned sequentially to each borehole, test pit, or surface location where physical, chemical, biological, radiological, and other measurements are taken.

24. Coordinates (Ft). The location where the sample was collected relative to the survey grid in feet. There are two fields in the coordinate description, north and east.

25. Sample ID. The identifying code or number given to the sample.

26. Sample Count. The count obtained on the soil sample in counts per minute.

27. Above Criteria? A flag column to mark samples for further consideration. A yes (Y) is entered if the sample count exceeds the criteria; a no (N) is entered if the sample count does not exceed the criteria.

STANDARD OPERATING PROCEDURE 6.6

USE OF GAMMA SPECTROMETRY SYSTEMS AS A SCREEN FOR GAMMA-RAY-EMITTING RADIONUCLIDES IN SOIL SAMPLES

1. PURPOSE

To provide guidance for the operation of a gamma spectrometry system to analyze soil samples in the laboratory.

2. DISCUSSION

The Remedial Investigation Plan (RIP) provides information on the scope of the given operation and the applicability of this procedure to the work activities.

Gamma-ray spectrometry provides qualitative and quantitative analysis of gamma-ray-emitting radionuclides by measuring the intensity and energy distribution of emitted photons. The output of a gamma spectrometer provides detailed information that is useful in determining the identity and quantity of radionuclides.

The operation of the spectrometry system is dependent on the combination of the selected detector, linear amplifier, and multichannel analyzer (MCA). The set up, calibration, and operation instructions in this procedure apply to most systems. Specific details in the operator's manual for the spectrometry system should be followed.

3. PROCEDURE

3.1. Associated Procedures

Information that applies to most field activities is provided in SOPs 1.1-1.10. In addition to the RIP, those SOPs provide guidance that may supplement the information in this procedure. They should be consulted as necessary to obtain specific information about equipment and supplies; sample collection, preservation, packaging, and shipping; decontamination procedures; and documentation requirements. Procedures directly associated with this SOP are listed below.

SOP No.	SOP Title
1.6	General Equipment Decontamination
6.11	Beta-Gamma Radiation Measurements Using a Geiger-Mueller Detector

3.2. Preparation

3.2.1. Office

A. Review the RIP and SOPs listed in Section 3.1..

B. Coordinate the arrival of samples to the laboratory with field staff.

C. Assemble the equipment and supplies listed in Appendix 5.1. Ensure the proper operation of all laboratory equipment.

3.2.2. Documentation

A. Obtain a logbook from the QA officer.

B. Record all samples received in the logbook. Enter the sample type, sample ID, analysis requested, and date received.

C. No forms are required to document thse procedures.

3.2.3. Laboratory

A. Screen samples with a Geiger-Mueller detector according to SOP 6.11, Beta-Gamma Radiation Measurements Using a Geiger-Mueller Detector, to ensure that laboratory personnel are not processing samples exhibiting high exposure rates.

B. Each sample received in the field laboratory should be contained in a holder of predetermined geometry like a cottage cheese container or a Marinelli beaker. If a sample is not in an approved container, transfer it into one.

3.3. Operation

3.3.1. Counting Standards

A. For HPGe, Ge(Li), or Si(Li) detectors, ensure that instructions for cooling the detector have been followed before applying high voltage to the preamplifier.

B. Following the instruction manual, connect the detector preamplifier signal cable to the input of the linear amplifier and the output of the linear amplifier to the input of the analog-to-digital converter (ADC).

C. Adjust the detector HV supply to 0 volts and then turn the power switch to HV-ON.

D. Apply proper polarity high voltage in small incremental steps according to the operator's manual for the detector preamplifer.

E. Program the MCA according to the operator's manual and choose the correct mode, size, and section of memory.

F. Ensure power switches are on for all other components.

G. Place a combination of Am-241, Co-60, and Cs-137 sources in position in a lead shield. Acquire a spectrum while adjusting the linear amplifier course gain and MCA gain. Adjust the gains and zero offset on the MCA so that a dynamic range of 20 to 2800 kilo-electron volts (keV) is achieved.

H. Adjust the linear amplifier pole zero adjustment and other parameters to optimize detector resolution. Compare the detector resolution, Full Width at

Half Maximum (FWHM), with detector specifications. Continue to make adjustments until the resolution compares favorably with the manufacturer's specifications.

I. Record all adjustment settings and the calculated resolution (FWHM at specific energy) in the logbook.

J. Each day before counting samples, one or more of the counting standards will be counted for 10 min. Record the net counts for a minimum of three regions of interest in the logbook and plot the calculated concentration on a chart for each day of laboratory operation.

3.3.2. Spectrometer Calibration

A. Follow instructions in the MCA Operator's Manual using Ra-226, U-238, or Th-232 standards or other reference standards specified in the RIP for the radioisotope that is to be analyzed.

B. Record all parameters and calculations in the logbook.

C. Perform calibration at the beginning of each week or after each power outage or system component replacement or adjustment.

3.3.3. Background Counts

A. Follow steps A-J in Section 3.3.1. for setting up the spectrometry system.

B. At the beginning of each week, a blank or background sample will be counted for 5 to 10 times the sample counting time. The frequency of background counts may be increased if it is suspected that levels may be changing because of work on the site or other influences.

C. Record the background counts in the logbook.

3.3.4. Sample Analyses

A. At the beginning of each day, measure the background gamma-ray spectrum for permanent record. The duration should be equal to the sample counting time.

B. Count samples according to procedures developed for the specific spectrometry system. Samples should be oriented in the same position as the standards. Ensure that all data and adjustment settings are permanently recorded on disk, tape, or hard copy.

C. Retain the computer-generated printouts containing analytical results.

3.4. Postoperation

3.4.1. Laboratory

A. Following the completion of each sample count, the computer will record net counts from each region of interest or other appropriate data on disk and hard

copy. Perform calculations of radionuclide concentrations and counting errors using these data.

B. Turn the high voltage (HV) to 0.

C. Turn all the system components to the off position.

D. Record the photon energy spectrum of each sample on a magnetic tape cassette or disk. The spectrum for any given sample can be recalled for additional or duplicate analysis as needed. Retain this information until other instructions are received from the installation manager.

E. Ensure that all radiological sources and standards are safely stored and locked in a secure location.

F. Ensure that all equipment is accounted for, decontaminated (see SOP 1.6, General Equipment Decontamination), and properly stored in the laboratory.

G. Archive the counted samples in the appropriate storage area.

3.4.2. Documentation

A. Complete logbook entries, verify the accuracy of entries, and sign/initial all pages.

B. No forms are required to document these procedures.

3.4.3. Office

A. Ensure that the originals of all computer disks, computer printouts, magnetic tapes, and logbooks are delivered to the document control officer (with copies to the site manager and files) for eventual delivery to the Department of Energy.

B. Inventory equipment and supplies. Repair or replace all broken or damaged equipment. Replace expendable items. Report incidents of malfunction or damage.

4. SOURCES

The generic nature of this procedure precludes the referencing of operator's manuals for specific multichannel analyzers and electronic systems. However, those manuals should be kept readily available during the operation of the detection system.

5. APPENDIX

5.1. Equipment and Supplies Checklist

APPENDIX 5.1

EQUIPMENT AND SUPPLIES CHECKLIST

_____ Multichannel analyzer (computer based)

_____ Reverse electrode high purity germanium detector (or other high resolution detector)

_____ Sodium iodide (4-inch-diameter by 4-inch-long detector)

_____ Associated electronics (H.V. power supplies, amplifiers, and test equipment)

_____ Lead shield

_____ High-speed oscilloscope

_____ Digital voltmeter

_____ Check sources: Am-241, Cs-137, and Co-60

_____ Counting standards: U-238, Ra-226, Th-230, and Th-232; solid reference materials in jar and petri dish geometry.

_____ Sample containers--cottage cheese containers or Marinelli beakers

STANDARD OPERATING PROCEDURE 6.7

NEAR SURFACE AND SOIL SAMPLE SCREENING FOR LOW-ENERGY GAMMA RADIATION USING THE FIDLER

1. PURPOSE

To describe the procedure in which a field instrument for the detection of low-energy radiation (FIDLER) is used to monitor surfaces and soil samples for the presence of low-energy gamma radiations that accompany some alpha emissions.

2. DISCUSSION

The Remedial Investigation Plan (RIP) provides information on the scope of specific operations, related health and safety requirements, and the applicability of this procedure.

The FIDLER uses a thin, 5-inch-diameter sodium iodide (NaI) crystal to detect low-energy radiation. The NaI crystal is optically coupled to a quartz light pipe and installed in a standard 5-inch probe housing that has an entrance window of beryllium. The principal use of this detector is for photons with energies less than 75 kilo-electron volts (keV).

The FIDLER probe can be used to scan individual samples for low-energy photons that normally accompany alpha emissions. Uranium is principally an alpha emitter. However, the radiation from its daughter products includes low-energy photons, principally L-orbital x rays from thorium. In the case of U-238, for example, two low-energy photons from Th-234 can be detected by the FIDLER. During most investigations, the instrument will be adjusted for maximum response for the 63 keV photon from Th-234 or the 60 keV photon of Am-241 formed by the beta decay of Pu-241.

Data from these measurements are presented as gross counts in the 60 keV energy range. The combination of this information with gross alpha counts of the same sample conducted according to SOP 6.5, Screening Soil Samples for Alpha Emitters, can be used to determine the presence or absence of radionuclides.

Included in this procedure are instructions for 1) initial instrument setup (voltage plateau), 2) daily response standardization using a sealed check source, 3) determination of the instrument's response to terrestrial background radiation, and 4) use of the instrument to scan ground surface areas and samples.

3. PROCEDURE

3.1. Associated Procedures

Information that applies to most field activities is provided in SOPs 1.1-1.10. In addition to the RIP, those SOPs provide guidance that may supplement the information in this procedure. They should be consulted as necessary to obtain specific information about equipment and supplies; sample collection, preservation, packaging, and shipping;

decontamination procedures; and documentation requirements. Procedures directly associated with this SOP are listed below.

SOP No.	SOP Title
1.1	General Instructions for Field Personnel
1.6	General Equipment Decontamination
6.5	Screening Soil Samples for Alpha Emitters

3.2. Preparation

3.2.1. Office

A. Review the RIP and SOPs listed in Section 3.1.

B. Coordinate schedules/actions with the installation staff.

C. Assemble the equipment and supplies listed in Appendix 5.1. Ensure the proper operation of all equipment.

D. Obtain appropriate permission for property access.

E. Before the FIDLER can be used in the field, it is necessary to determine the correct operating voltage. This is accomplished by determining the plateau for background radiation and for radiation from a source of Am-241 (60 keV) in which the intensity is several times greater than background radiation levels. Determine the operating voltage once each week.

1. Inspect the FIDLER, the ratemeter/scaler, and interconnecting cable for obvious damage.

2. If no damage is observed, adjust the high voltage to 0 volts before connecting the FIDLER and the ratemeter/scaler.

3. Connect the FIDLER to the ratemeter/scaler in an area that has exhibited background radiation in previous measurements.

4. Turn the ratemeter/scaler selector switch to the high voltage setting and slowly adjust the high voltage to 900 volts (V).

5. Place the FIDLER in a position so that a series of 0.5-min counts can be made at various high-voltage settings.

6. Make three 0.5-min readings and record the voltage, count time, counts, and counts per minute in the columns on the Plateau Curve Record. When these three readings have been completed, adjust the high voltage upward 40 to 50 V. Repeat the three readings. Continue this procedure until three recordings have been made at a high-voltage setting of 1400 V. Do not exceed 1400 V.

7. Place the Am-241 source approximately 1 inch from the beryllium entrance window near the center of the probe and repeat the series of 0.5-min readings for high-voltage settings between 900 and 1400 V.

8. On the Plateau Curve Record, plot the FIDLER response as a function of high voltage. Between 1100 and 1300 V, there is little change in the detector's response. This represents the operating plateau. Set the ratemeter/scaler high voltage at the midpoint of the plateau (typically 1200 V) for field operation. Minor fluctuations in the high voltage caused by environmental conditions or battery drain will have little effect on the count rate. Record this ratemeter/scaler voltage on the Plateau Curve Record form.

3.2.2. Documentation

A. Obtain a logbook from the QA officer.

B. Record results of the equipment check and information concerning the initial setup of the FIDLER in the logbook.

C. Obtain a sufficient number of the appropriate ER Program data collection forms (see INDEX TO SOPs).

D. Consult the ER Program data administrator for a current list of information management codes, location IDs, and sample numbers used in the completion of data forms.

E. Record information concerning the initial setup of the FIDLER on the Plateau Curve Record form (Appendix 5.2). Instructions for completing the form are in Appendix 5.5 (Data Form Completion).

3.2.3. Field

A. Daily Source Check

1. Establish a fixed geometry between the detector and the source so that their relative position is a matter of record and reproducible from one work period to the next.

2. Make five 1-min counts with the Am-241 source in its check position. Record each count in the logbook. Repeat this step twice daily when the instrument is in use or at any new locations.

3. Determine the average and standard deviation of the five 1-min counts. Record these values and three times the standard deviation in the logbook.

The average source count (X) = $\frac{x_1+x_2+x_3+x_4+x_5}{5}$

The standard deviation of the average source count (SDX) = $(X/5)^{1/2}$

B. Monitoring the performance of the FIDLER

1. Prepare a control chart at the beginning of the site characterization and use it each day to record the FIDLER's response to the Am-241 source.

2. On a piece of linear graph paper, place consecutive calendar dates on the x-axis. Define a range along the y-axis that includes the average FIDLER source count ± 3 standard deviations. Draw three horizontal lines that intersect the y-axis at these three points.

3. Determine the average count rate and plot this value on the control chart for that day. If the average count rate falls within the ±3 standard deviations as defined above, the FIDLER may be used for field measurements. If the average count rate is not within this range, corrective action must be taken (see Section 3.2.3.C).

C. Corrective Action

1. Check the ratemeter/scaler calibration due date.

2. Check to see that the ratemeter/scaler high voltage is set at the plateau midpoint.

3. Turn off the ratemeter/scaler and disconnect the cable to the FIDLER. Clean the cable and chassis connectors with ethyl alcohol and let dry.

4. Reconnect the cable, turn on the ratemeter/scaler, and check the voltage setting.

5. Check the source-to-detector distance and make any necessary corrections.

6. Repeat the daily source check procedure. If the FIDLER response is within the range of the average count rate ± 3 standard deviations, the unit may be used. If the average count rate is still outside the control boundary, turn off the instrument and use a substitute instrument. Repeated failures will require attention by the manufacturer. The FIDLER is temperature sensitive and will not function correctly at temperatures below 32°F.

D. Determination of Background

1. In order to provide a statistical basis to determine if samples or locations are contaminated, calculate the mean background and standard deviation.

   a. In a location designated as background (not in the contaminated area) or using five soil samples collected from a background area, perform a series of five 1-minute counts with the FIDLER probe in the same position as it will be for screening samples in locations (see Sections 3.3.1 and 3.3.2).

   b. Determine the mean and standard deviation of the five background counts.

$$\text{Mean} = X = \frac{x_1+x_2+x_3+x_4+x_5}{5}$$

where

x_1, x_2, x_3, x_4, x_5 = the background counts

standard deviation = SDX = $(X/5)^{1/2}$

2. The contamination criterion used for further samples is the mean background plus 3 standard deviations (X + 3SDX). Samples with 1-min counts greater than this criterion should be considered contaminated.

3. Record this number or criterion on the FIDLER Soil Sample Screening Log (Appendix 5.3) or the FIDLER Measurement Data form (Appendix 5.4), depending on the type of screening to be performed.

3.3. Operation

3.3.1 Screening Soil Samples

A. Record the soil sample screening data on the FIDLER Soil Sample Screening Log form (Appendix 5.3) following the instructions in Appendix 5.5, Data Form Completion.

B. Place the soil samples in the petri dishes (fill to the top).

C. The steps for screening samples are described below.

1. Place the soil sample container (petri dish) in the counting shield.

2. Place the FIDLER probe in a counting jig inside the lead shield so that it is positioned above the center of a sample container holder. Adjust the height so that the FIDLER is one inch above the sample container. Close the shield door.

3. Turn the ratemeter/scaler selector switch to preset time and set the time for one min. Push the reset button to start and count.

4. Record the counts and the counting time on the FIDLER Soil Sample Screening Log form.

6. Remove the sample container, store it in sample archive, and repeat with additional samples.

3.3.2. Near-Surface Screening

A. The FIDLER Measurement Data form (Appendix 5.4) is completed as described in Appendix 5.5, Data Form Completion.

B. Determine that the FIDLER system has been checked and is ready for field measurements.

C. Refer to the RIP for the areas to be scanned, the number of people required, time requirements, and special instructions.

D. Subdivide the grid block squares into square (or regular) grid blocks, the total area of which can be scanned in 0.5 or 1-min intervals. Use a calibrated measurement tape.

E. Drainage paths can only be scanned with a FIDLER if the area is free of standing or flowing water. If the area is dry, place grid stakes at regular intervals between the preexisting stakes.

F. Record scan measurements as integral counts over the area to be scanned. Pulses from the FIDLER will be summed for 0.5 min or 1 min. Turn the main selector switch of the ratemeter/scaler to either 0.5 or 1 min (as specified in the RIP).

G. Begin scans at one corner of a grid block and progress in a serpentine pattern over the entire block, ending at the diagonally opposite corner of the block. Push the ratemeter/scaler reset button as the scan begins. With practice, the timed count should end upon reaching the opposite corner. During the scan, the field representative must listen to the audible signal from the meter. Although scanning speed should not be slowed when increased audible signals are heard, note the presence of apparent hot spots when recording the integrated count for the scan.

H. After completing the scan for an individual grid block, record the integrated count in its respective position on the FIDLER Measurement Data form (Appendix 5.4). Place a check mark above the recorded count to signify that anomalous or hot spot areas may exist on the basis of audible signals for that grid block.

I. Compare the location count rate to the contamination criterion (average background and 3 standard deviations). If the count rate is greater, the location is marked Y for further study or characterization.

3.4. Postoperation

3.4.1. Field

A. Ensure that all equipment is accounted for, decontaminated (see SOP 1.6, General Equipment Decontamination), and ready for shipment.

B. If necessary, make sure all survey or sampling locations are properly staked and the location ID is readily visible on the location stake.

C. Ensure that all radiological sources and standards have been stored in a locked area.

3.4.2. Documentation

A. Complete logbook entries, verify the accuracy of entries, and sign/initial all pages.

B. Review data collection forms for completeness.

3.4.3. Office

A. Deliver original forms and logbooks to the document control officer (with copies to the site manager and files) for eventual delivery to the Department of Energy.

B. Inventory Equipment and supplies. Repair or replace all broken or damaged equipment. Replace expendable items. Return equipment to the equipment manager and report incidents of malfunction or damage.

4. SOURCE

Becron. 1985. "Technical Manual, Model: Labtech Scaler/Ratemeter/Analyzer with 2-Channel Option." Bicron Corporation, Newbury, Ohio.

5. APPENDIXES

5.1. Equipment and Supplies Checklist

5.2. Plateau Curve Record

5.3. FIDLER Soil Sample Screening Log Form

5.4. FIDLER Measurement Data Form

5.5. Data Form Completion

APPENDIX 5.1

EQUIPMENT AND SUPPLIES CHECKLIST

_____ FIDLER probe

_____ Ratemeter/scaler with voltage indicator and optional headphones

_____ Connector cable

_____ Lead shield and counting jig (optional)

_____ Plan view (site map) of the area to be surveyed that includes grid system coordinates

_____ Calibrated measurement tape or chain

_____ Am-241 source or the equivalent

_____ Hand-held calculator

_____ FIDLER heat shield, if available

_____ Linear graph paper for the performance control chart

_____ Petri dishes for soil samples

APPENDIX 5.2

PLATEAU CURVE RECORD

PLATEAU CURVE RECORD

PAGE 1 OF ____

FACILITY CODE _____ LOG DATE _____

LOGGER CODE _____ FIELD REP _____

RATEMETER/SCALER: ACCEPTANCE CODE _____

MODEL NO _____ SERIAL NO _____ CALIBRATION DATE _____

WINDOW _____ THRESHOLD _____ BATTERY _____

PROBE:

MODEL NO _____ SERIAL NO _____ HIGH VOLTAGE _____

CHECK SOURCE:

SERIAL NO _____ ISOTOPE _____ ACTIVITY _____

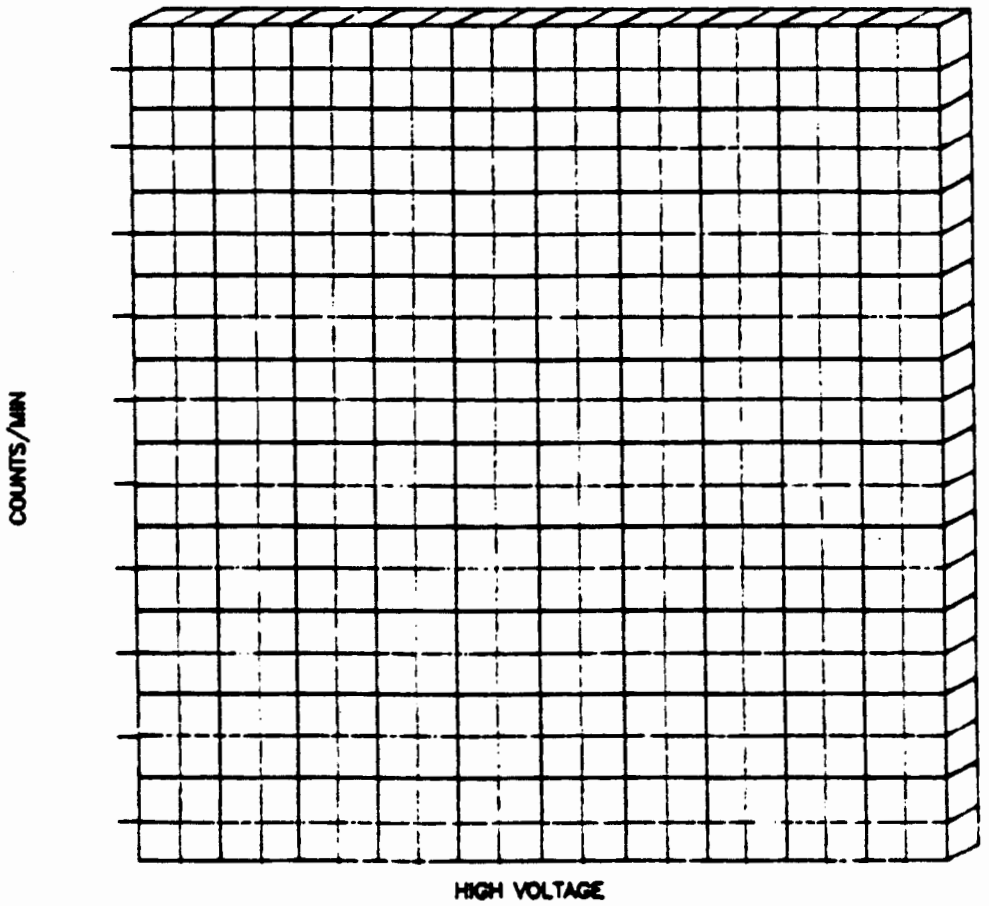

ACCEPTANCE CODES: A—ACCEPTABLE R—RECONNAISSANCE U—UNACCEPTABLE N—NOT DETERMINED

COMPLETE BOLDED DATA FOR ENTRY INTO TIMS

PCR-102 (3/88)

FORM COMPLETED BY/DATE _____ TECHNICAL REVIEWER/DATE _____

APPENDIX 5.3

FIDLER SOIL SAMPLE SCREENING LOG

FIDLER SOIL SAMPLE SCREENING LOG PAGE 1 OF ____

FACILITY CODE _____ LOG DATE _____

LOGGER CODE _____ FIELD REP _____

RATEMETER/SCALER: ACCEPTANCE CODE _____

MODEL NO _____ SERIAL NO _____ CALIBRATION DATE _____

WINDOW _____ THRESHOLD _____ HIGH VOLTAGE _____ BATTERY _____

NaI PROBE :

MODEL NO _____ SERIAL NO _____ CALIBRATION DATE _____

CHECK SOURCE:

ISOTOPE _____ ACTIVITY _____ DPM SERIAL NO _____

SOURCE CHECK

METER READING _____ COUNTS/_____ MIN = _____ CPM

(WITHIN ± 3 STANDARD DEVIATIONS?[1] _____ (Y/N))

AVERAGE BACKGROUND + 3 STANDARD DEVIATIONS = _____ CPM

COMMENTS _____

LOCATION ID	COORDINATES (FT)		SAMPLE ID	COUNTS (=CPM)	CONTAMINATED YES/NO	ESTIMATED[2] pCi/gram
	NORTH	EAST				

1 SOURCE CHECK WITHIN ± 3 STANDARD DEVIATIONS (YES/NO), FROM THE CONTROL CHART

2 THE pCi/gram RADIONUCLIDE CONCENTRATION CAN BE ESTIMATED ONLY IF FIELD CALIBRATION FACTORS ARE AVAILABLE

ACCEPTANCE CODES: A—ACCEPTABLE R—RECONNAISSANCE U—UNACCEPTABLE N—NOT DETERMINED

COMPLETE BOLDED DATA FOR ENTRY IN TMS
FES-125 (3/88)

_____ FORM COMPLETED BY/DATE

_____ TECHNICAL REVIEWER/DATE

APPENDIX 5.4

FIDLER MEASUREMENT DATA FORM

FIDLER MEASUREMENT DATA

PAGE 1 OF ___

FACILITY CODE _____ LOG DATE _____

LOGGER CODE _____ FIELD REP _____

RATEMETER/SCALER: ACCEPTANCE CODE _____

MODEL NO _____ SERIAL NO _____ CALIBRATION DATE _____

WINDOW _____ THRESHOLD _____ VOLTAGE _____ BATTERY _____

NaI PROBE:

MODEL NO _____ SERIAL NO _____ CALIBRATION DATE _____

CHECK SOURCE:

ISOTOPE _____ ACTIVITY _____ DPM SERIAL NO _____

SOURCE CHECK

METER READING _____ COUNTS/_____ MIN = _____ CPM

(WITHIN ± 3 STANDARD DEVIATIONS?[1] _____ (Y/N)

AVERAGE BACKGROUND + 3 STANDARD DEVIATIONS = _____

COMMENTS _____

LOCATION ID	GRID BLOCK SCANNED (FROM N.E. CORNER)		INTEGRATED COUNT (CPM)	AUDIBLE (Y)es or (N)o	CONTAMINATED (Y)es or (N)o
	NORTH	EAST			

[1] SOURCE CHECK WITH ± 3 STANDARD DEVIATIONS, (YES/NO) FROM THE CONTROL CHART

ACCEPTANCE CODES: A–ACCEPTABLE R–RECONNAISSANCE U–UNACCEPTABLE N–NOT DETERMINED

COMPLETE BOLDED DATA FOR ENTRY INTO TMS
FMD-120 (3/88)

FORM COMPLETED BY/DATE _____ TECHNICAL REVIEWER/DATE _____

APPENDIX 5.5

DATA FORM COMPLETION

Use a pen with black ink that is not water soluble (not a felt-tip pen). Make an entry in each blank. Where there is no data entry, enter UNK for Unknown, NA for Not Applicable, or ND for Not Done. If any procedure was not performed as prescribed, give the reason for the change or omission on the form. To change an entry, draw a single line through it, add the correct information above it, and initial the change.

PLATEAU CURVE RECORD

1. Facility Code. Five-character code abbreviating the facility name where program activity is being conducted. The first three characters indicate the facility, and the remaining two numbers designate the specific site within the facility.

2. Log Date. The date the information recorded on the form was obtained in the format DD-MMM-YY (01-JAN-88).

3. Logger Code. Three-character or four-character code identifying the company responsible for collecting the information recorded on the form.

4. Field Rep. The name of the field representative.

5. Acceptance Code. One-character code assigned by the site manager.

6. Ratemeter/Scaler Model No. The model number of the ratemeter/scaler.

7. Ratemeter/Scaler Serial No. The serial number of the ratemeter/scaler.

8. Ratemeter/Scaler Calibration Date. The date when the ratemeter/scaler was last calibrated.

9. Window. The window will be in the out position unless otherwise specified.

10. Threshold. The adjustment for the lower energy level of the discriminator shown on the calibration sticker.

11. Battery. The battery voltage reading at the beginning of the measurement.

12. Probe Model Number. The model number of the FIDLER probe.

13. Probe Serial Number. The serial number of the FIDLER probe.

14. Probe High Voltage. The final voltage setting that will be applied to the detector, as determined by the Plateau Curve procedure. For the FIDLER, the operating voltage should be about 1200V.

15. Check Source Serial No. The serial number of the radiation check source.

16. Check Source Isotope. The radioactive isotope contained in the check source given as element and mass number, like Am-241.

17. Check Source Activity. The activity of the radioactive check source in disintegrations per minute (dpm). An activity given in microcuries (μCi) can be converted to dpm using 2.22×10^6 dpm = 1 μCi.

18. Counts/Min. The count rate given in counts per minute (cpm).

19. High Voltage. The voltage applied to the detector during the collection of the associated counts.

APPENDIX 5.5, Continued

FIDLER SOIL SAMPLE SCREENING LOG

1. Facility Code. Five-character code abbreviating the facility name where program activity is being conducted. The first three characters indicate the facility, and the remaining two numbers designate the specific site within the facility.

2. Log Date. The date the information recorded on the form was obtained in the format DD-MMM-YY (01-JAN-88).

3. Logger Code. Three-character or four-character code identifying the company responsible for collecting the information recorded on the form.

4. Field Rep. The name of the field representative.

5. Acceptance Code. One-character code assigned by the site manager.

6. Ratemeter/Scaler Model No. The model number of the ratemeter/scaler.

7. Ratemeter/Scaler Serial No. The serial number of the ratemeter/scaler.

8. Ratemeter/Scaler Calibration Date. The date when the ratemeter/scaler was last calibrated.

9. Window. The window will be in the out position unless otherwise specified.

10. Threshold. The adjustment for the lower energy level of the discriminator shown on the calibration sticker.

11. High Voltage. The voltage setting that is applied to the probe as determined by the Plateau Curve procedure.

12. Battery. The battery voltage reading at the beginning of the measurement.

13. NaI Probe Model No. The model number of the FIDLER probe.

14. NaI Probe Serial No. The serial number of the FIDLER probe.

15. NaI Probe Calibration Date. The date when the FIDLER probe was last calibrated.

16. Check Source Isotope. The radioactive isotope that the source contains, given as element and mass number, like Am-241.

17. Check Source Activity. The activity of the check source, measured in disintegrations per minute (dpm). An activity given in microcuries can be converted to dpm using 2.22×10^6 dpm = 1 μCi.

18. Check Source Serial No. The serial number of the check source.

19. Source Check Meter Reading. The results of a count on a check source. The check source data consists of three fields: total counts, counting time in minutes, and count rate in counts per minute (cpm).

20. Within ± 3 Standard Deviations (Y/N). This field describes the performance of the FIDLER, from the control chart in 3.2.3.B., Field Preparation.

21. Average Background + 3 Standard Deviations (cpm). This field gives the average background count rate + 3 standard deviations of the average count rate. It is used as a contamination criterion. Count rates greater than this are considered contaminated. Count time equals 1 min.

    X = Average or Mean Background = $\frac{x_1+x_2+x_3 \ldots x_n}{N}$

    where

    x_1, x_2, x_3 etc = individual background counts

    N = the number of counts taken

    SDX = standard deviation of the average background = $(X/N)^{1/2}$

22. Comments. Any additional information.

23. Location ID. Four-character code assigned sequentially to each borehole, test pit, or surface location where physical, chemical, biological, radiological, and other measurements are taken.

24. Coordinates (Ft). The location of the FIDLER measurement on the survey grid in units of feet. The two coordinate fields are in the format north and east.

25. Sample ID. The identifying code or number given to the sample.

26. Counts (=cpm). The number of counts registering on the FIDLER meter during the 1-min counting period.

27. Contaminated (Yes/No). If the counts per 1 min obtained are greater than the average background plus 3 standard deviations, the sample is considered contaminated. Enter Yes or Y if contaminated and No or N if not contaminated.

28. Estimated pCi/gram. If calibration factors are available for the specific site under investigation, the FIDLER cpm can be converted to a pCi/gram concentration. Enter N/A if these factors are not available.

APPENDIX 5.5, Continued

FIDLER MEASUREMENT DATA FORM

1. Facility Code. Five-character code abbreviating the facility name where program activity is being conducted. The first three characters indicate the facility, and the remaining two numbers designate the specific site within the facility.

2. Log Date. The date the information recorded on the form was obtained in the format DD-MMM-YY (01-JAN-88).

3. Logger Code. Three-character or four-character code identifying the company responsible for collecting the information recorded on the form.

4. Field Rep. The name of the field representative.

5. Acceptance Code. One-character code assigned by the site manager.

6. Ratemeter/Scaler Model No. The model number of the ratemeter/scaler.

7. Ratemeter/Scaler Serial No. The serial number of the ratemeter/scaler.

8. Ratemeter/Scaler Calibration Date. The date when the ratemeter/scaler was last calibrated.

9. Window. The window will be in the out position unless otherwise specified.

10. Threshold. The adjustment for the lower energy level of the discriminator shown on the calibration sticker.

11. Voltage. The voltage setting that is applied to the probe, as determined by the Plateau Curve procedure.

12. Battery. The battery voltage reading at the beginning of the measurement.

13. NaI Probe Model No. The model number of the FIDLER probe.

14. NaI Probe Serial No. The serial number of the FIDLER probe.

15. NaI Probe Calibration Date. The date when the FIDLER probe was last calibrated.

16. Check Source Isotope. The radioactive isotope that the source contains, given as element and mass number, like Am-241.

17. Check Source Activity. The activity of the check source, measured in disintegrations per minute (dpm). An activity given in microcuries (μCi) can be converted to dpm using 2.22×10^6 dpm = 1 μCi.

18. Check Source Serial No. The serial number of the check source.

19. Source Check Meter Reading. The results of a count on a check source. Check source data consists of three fields: total counts, count time in minutes, and count rate in cpm.

20. Within ± 3 Standard Deviations. This field describes the performance of the FIDLER, from the control chart in Section 3.2.3.B, Field Preparation. Enter Y (yes) or N (no).

21. Average Background + 3 Standard Deviations. This field gives the average background count rate (cpm) + 3 standard deviations of the average. It is used as a contamination criterion; count rates greater than this number indicate contaminated areas.

$$X = \text{Average or Mean Background} = \frac{x_1+x_2+x_3 \ldots x_n}{N}$$

where

x_1, x_2, x_3, etc. = individual background counts

N = the number of counts taken

SDX = standard deviation of the average background = $(X/N)^{1/2}$

22. Comments. Any additional information.

23. Location ID. Four-character code assigned sequentially to each borehole, test pit, or surface location where physical, chemical, biological, radiological, and other measurements are taken.

24. Grid Block Scanned (From N.E. Corner). The location of the grid block that was scanned, identified by the survey coordinates of the northeast corner relative to the survey grid in units of feet. There are two fields in the coordinate description: north and east.

25. Integrated Count (cpm). The count rate in counts per minute obtained from the walkover scan of the grid.

26. Audible. If an audible anomaly was noted, enter YES; if no audible anomaly was detected, enter NO.

27. Contaminated. If the count rate recorded is greater than the average background plus 3 standard deviations, the location is considered contaminated (Y). If it is less, it is not considered contaminated (N).

STANDARD OPERATING PROCEDURE 6.8

IN SITU GAMMA-RAY MEASUREMENTS USING A SHIELDED DELTA-GAMMA DETECTOR

1. PURPOSE

To provide guidance for the *in situ* measurement of gamma radiation emitted from Ra-226 in surface soil and to describe a technique for screening potentially contaminated soils for other gamma-emitting radionuclides.

2. DISCUSSION

The Remedial Investigation Plan (RIP) provides information on the scope of the specific operation, related health and safety requirements, and the applicability of this procedure to the work activities.

The shielded, delta-gamma procedure was developed to estimate *in situ* Ra-226 concentrations in soil. If all radionuclides in the soil are known, the technique can be adapted to estimate other gamma-emitting radionuclides. For radionuclides other than Ra-226, new calculations may be needed to determine detector-shield thickness. Data collected by this procedure correlate more closely with soil gamma radiation levels than do measurements with an unshielded sodium iodide (NaI) detector in the presence of external gamma-emitting influences.

3. PROCEDURE

3.1. Associated Procedure

Information that applies to most field activities is provided in SOPs 1.1-1.10. In addition to the RIP, those SOPs provide guidance that may supplement the information in this procedure. They should be consulted as necessary to obtain specific information about equipment and supplies; sample collection, preservation, packaging, and shipping; decontamination procedures; and documentation requirements. Procedures directly associated with this SOP are listed below.

SOP No.	SOP Title
1.1	General Instructions for Field Personnel
1.6	General Equipment Decontamination

3.2. Preparation

3.2.1. Office

A. Consult the site manager regarding the applicability of this procedure to a specific location. This decision should be based on previously collected sample data.

B. Review the RIP and SOPs listed in Section 3.1.

C. Coordinate schedules/actions with the installation staff.

D. Obtain appropriate permission for property access.

E. Assemble the equipment and supplies listed in Appendix 5.1. Ensure the proper operation of all equipment.

F. For Ra-226 determination, the delta-gamma calibration may be performed at the DOE Calibration Pads (Grand Junction, Colorado). The calibration factor will account for Th-232 and K-40 concentrations. Site-specific calibrations can be developed by performing delta counts at various locations; the locations should have a range of surface radiation levels. At each location, a surface soil sample will be obtained and analyzed for gamma-emitting radionuclides. From these data, a correlation of the delta count rate to radionuclide concentrations can be established.

3.2.2. **Documentation**

A. Obtain a logbook from the QA officer.

B. Record results of the equipment check in the logbook.

C. Obtain a sufficient number of the appropriate ER Program data collection forms (see INDEX TO SOPs).

D. Consult the ER Program data administrator for a current list of information management codes and location IDs used in the completion of data forms.

3.2.3. **Field**

A. Check the detector response to a gamma source.

B. Use the Background Data form (Appendix 5.2) to document background delta-gamma results as described in Appendix 5.4, Data Form Completion. Calculate and record the average and standard deviation of the background data.

C. Perform a series of counts at 10 background locations. The locations are counted twice--once without the delta shield (up) and once with the shield (down). Count for 1 min for each position.

D. Delta measurements at 10 background locations are calculated to provide a statistical basis for evaluating gamma-ray measurements of potentially contaminated locations as a function of site background levels.

Delta = without shield (up) counts; with shield (down) counts

E. Determine the mean background delta count and its standard deviation where the mean represents the average of the delta counts and is calculated as shown below.

$$X = (x_1 + x_2 + x_3 ... + x_n) / N$$

where

X = the delta mean of the delta measurement

N = number of samples

$x_1 + x_2 + x_3 ... + x_n$ = summation of count results for all background counts measured

The standard deviation of the mean is calculated for the delta measurement as shown below.

$$SDX = (X/N)^{1/2}$$

where

N = number of samples (10 if 10 background samples are counted)

X = the mean, calculated as described above

F. The delta counts are equal to the difference in counts obtained with the shield and without the shield. The criteria for contamination used for subsequent samples from areas suspected of gamma-emitting radionuclide contamination is based on these delta counts. Samples that result in counts greater than X + 3SDX are considered contaminated.

3.3. Operation

3.3.1. Gamma-Ray Measurements

A. Use the Delta Measurement Data form (Appendix 5.3) for documenting field delta-gamma measurements. Instructions for the form are in Appendix 5.4.

B. Each day before sampling, check the high voltage, threshold setting, window setting (specified on the calibration sticker), and battery condition.

C. The measurement of *in situ* gamma radiation is performed by making two 1-min counts over the locations to be characterized. The first count is performed without the shield (up), and the second is performed with the shield in position (down).

D. Compare the sample delta to the average background delta plus three standard deviations of the background delta. If the former is greater than the latter, stake the location. The areal extent of the anomaly will be characterized by taking additional delta-gamma measurements and obtaining soil-surface samples (delta = the difference between counts without the shield and counts with the shield).

3.4. Postoperation

3.4.1. Field

A. Ensure that all equipment is accounted for, decontaminated (see SOP 1.6, General Equipment Decontamination), and ready for shipment.

B. If necessary, make sure survey locations are properly staked and the appropriate location ID is readily visible on the location stake.

3.4.2. Documentation

A. Record any uncompleted work (like additional monitoring) in the logbook.

B. Complete logbook entries, verify the accuracy of entries, and sign/initial all pages.

C. Review data collection forms for completeness.

3.4.3. Office

A. Deliver original forms and logbooks to the document control officer (with copies to the site manager and files) for eventual delivery to the Department of Energy.

B. Inventory equipment and supplies. Repair or replace all broken or damaged equipment. Replace expendable items. Return equipment to the equipment manager and report incidents of malfunction or damage.

4. SOURCE

BFEC. 1984. "Surface Gamma-ray Measurement Protocol." Bendix Field Engineering Corporation report, July 1984. Grand Junction, Colorado.

5. APPENDIXES

5.1. Equipment and Supplies Checklist

5.2. Background Data Form

5.3. Delta Measurement Data Form

5.4. Data Form Completion

APPENDIX 5.1

EQUIPMENT AND SUPPLIES CHECKLIST

_____ Shielded delta housing

_____ Portable ratemeter/scaler (Ludlum 2220 or the equivalent

_____ Sodium iodide (NaI) gamma scintillometer (Ludlum 44-10 or the equivalent) measuring 2 inches x 2 inches

_____ Appropriate gamma check source (like Cs-137)

_____ D-cell batteries (4)

_____ Coaxial cables

_____ Hand-held calculator

APPENDIX 5.2

BACKGROUND DATA FORM

BACKGROUND DATA

PAGE 1 OF ____

FACILITY CODE _____ **LOG DATE** _____

LOGGER CODE _____ FIELD REP _____

ACCEPTANCE CODE _____

RATEMETER/SCALER:

MODEL NO _____ SERIAL NO _____ CALIBRATION DATE _____

WINDOW _____ THRESHOLD _____ HIGH VOLTAGE _____ BATTERY _____

NAI PROBE :

MODEL NO _____ SERIAL NO _____ CALIBRATION DATE _____

CHECK SOURCE DATE/TIME _____

DELTA SHIELD SERIAL NO _____

COUNT TIME = 1 MINUTE

COMMENTS _____

LOCATION ID	COORDINATES (FT)			UP COUNTS[1] (Shield Out)	DOWN COUNTS[1] (Shield In)	DELTA[1]
	NORTH	EAST	DEPTH (FT)	COUNTS (TOTAL)	COUNTS (TOTAL)	COUNTS

DELTA MEAN = $\bar{x}$ = _____ STANDARD DEVIATION OF THE DELTA MEAN = $SD\bar{x}$ = _____

[1] COUNTING TIME MUST BE 1 MINUTE

ACCEPTANCE CODES: A—ACCEPTABLE R—RECONNAISSANCE U—UNACCEPTABLE N—NOT DETERMINED

COMPLETE BOLDED DATA FOR ENTRY INTO TIMS
BKG-122 (1/88)

_____ FORM COMPLETED BY/DATE

_____ TECHNICAL REVIEWER/DATE

APPENDIX 5.3

DELTA MEASUREMENT DATA FORM

DELTA MEASUREMENT DATA

PAGE 1 OF ___

FACILITY CODE _____ LOG DATE _____

LOGGER CODE _____ FIELD REP _____

RATEMETER/SCALER: ACCEPTANCE CODE _____

MODEL NO _____ SERIAL NO _____ CALIBRATION DATE _____

WINDOW ____ THRESHOLD _____ HIGH VOLTAGE _____ BATTERY _____

NAI PROBE:

MODEL NO _____ SERIAL NO _____ CALIBRATION DATE _____

CHECK SOURCE DATE/TIME _____

DELTA SHIELD SERIAL NO _____

MEAN BACKGROUND DELTA (COUNTS) = $\bar{X}$ = _____

STANDARD DEVIATION OF THE DELTA MEAN = $SD\bar{X}$ = _____ $3(SD\bar{X})$= _____

COMMENTS _____

LOCATION ID	COORDINATES (FT)		DEPTH (FT)	UP COUNTS[1] (SHIELD OUT)	DOWN COUNTS[1] (SHIELD IN)	DELTA[1]	ABOVE CRITERIA?	
	NORTH	EAST		COUNTS TOTAL	COUNTS TOTAL	COUNTS	YES (Y)	NO (N)

[1] COUNTING TIME MUST BE ONE MINUTE.

ACCEPTANCE CODES: A—ACCEPTABLE R—RECONNAISSANCE U—UNACCEPTABLE N—NOT DETERMINED

COMPLETE BOLDED DATA FOR ENTRY INTO TIMS

DMD-112 (1/88)

FORM COMPLETED BY/DATE _____ TECHNICAL REVIEWER/DATE _____

APPENDIX 5.4

DATA FORM COMPLETION

Use a pen with black ink that is not water soluble (not a felt-tip pen). Make an entry in each blank. Where there is no data entry, enter UNK for Unknown, NA for Not Applicable, or ND for Not Done. If any procedure was not performed as prescribed, give the reason for the change or omission on the form. To change an entry, draw a single line through it, add the correct information above it, and initial the change.

BACKGROUND DATA FORM

1. Facility Code. Five-character code abbreviating the facility name where program activity is being conducted. The first three characters indicate the facility, and the remaining two numbers designate the specific site within the facility.

2. Log Date. The date that information recorded on the form was obtained in the format DD-MMM-YY (01-JAN-88).

3. Logger Code. Three-character or four-character code identifying the company responsible for collecting the information recorded on the form.

4. Field Rep. The name of the field representative.

5. Acceptance Code. One-character code assigned by the site manager.

6. Ratemeter/Scaler Model No. The model number of the ratemeter/scaler.

7. Ratemeter/Scaler Serial No. The serial number of the ratemeter/scaler.

8. Ratemeter/Scaler Calibration Date. The date when the ratemeter/scaler was last calibrated.

9. Window. The window will be in the out position unless otherwise specified.

10. Threshold. The adjustment for the lower energy level of the discriminator that is specified on the calibration sticker of the ratemeter/scaler.

11. High Voltage. The voltage that is applied to the detector. These voltages generally range from 700-1000 V, with slight variations in each system.

12. Battery. The battery voltage reading at the beginning of the measurement (OK or low).

13. NaI Probe Model No. The model number of the sodium iodide (NaI) probe.

14. NaI Probe Serial No. The serial number of the NaI probe.

15. NaI Probe Calibration Date. The date when the NaI probe was last calibrated.

16. Source Check Date/Time. The date and time the detector response to a gamma source was last checked.

17. Delta Shield Serial No. The serial number of the delta shield.

18. Comments. Any additional information.

19. Location ID. Four-character code assigned sequentially to each borehole, test pit, or surface location where physical, chemical, biological, radiological, and other measurements are taken.

20. Coordinates (Ft). The coordinates of the measurement location in feet. The format is north, east, and depth below the ground surface.

21. Up Counts (Shield Out). Data pertaining to a 1-min count taken without the delta shield in place.

22. Down Counts (Shield In). Data pertaining to a 1-min count taken with the delta shield in place.

23. Delta. The difference between the up and down counts (shield out and shield in).

Delta = up counts - down counts

DELTA MEASUREMENT DATA FORM

1. Facility Code. Five-character code abbreviating the facility name where program activity is being conducted. The first three characters indicate the facility, and the remaining two numbers designate the specific site within the facility.

2. Log Date. The date that information recorded on the form was obtained in the format DD-MMM-YY (01-JAN-88).

3. Logger Code. Three-character or four-character code identifying the company responsible for collecting the information recorded on the form.

4. Field Rep. The name of the field representative.

5. Acceptance Code. One-character code assigned by the site manager.

6. Ratemeter/Scaler Model No. The model number of the ratemeter/scaler.

7. Ratemeter/Scaler Serial No. The serial number of the ratemeter/scaler.

8. Ratemeter/Scaler Calibration Date. The date when the ratemeter/scaler was last calibrated.

9. Window. The window will be in the out position unless otherwise specified.

10. Threshold. The adjustment for the lower energy level of the discriminator that is specified on the calibration sticker.

11. High Voltage. The voltage that is applied to the detector that is specified on the calibration sticker. The typical operating voltage for an NaI probe is 700-1000V.

12. Battery. The battery voltage reading at the beginning of the measurement (OK or low).

13. NaI Probe Model No. The model number of the NaI probe.

14. NaI Probe Serial No. The serial number of the NaI probe.

15. NaI Probe Calibration Date. The date when the NaI probe was last calibrated.

16. Check Source Date/Time. The date and time the detector response to a gamma source was last checked.

17. Delta Shield Serial No. The serial number of the delta shield.

18. Mean Background Delta (Counts) = X. This is the mean for the delta counts obtained during the background counts (as described in Section 3.2.2.B.-E.).

19. Standard Deviation of the Delta Mean = SDX. This is the standard deviation of the delta mean that is calculated in Section 3.2.2.E.

20. 3(SDX) is equal to 3 times the SDX and is calculated to provide a contamination criterion.

21. Comments. Any additional information.

22. Location ID. Four-character code assigned sequentially to each borehole, test pit, or surface location where physical, chemical, biological, radiological, and other measurements are taken.

23. Coordinates (Ft). The coordinates of the measurement location in feet. The format is north, east, and depth below the ground surface. For surface measurements, the depth is shown as 0.

24. Up Counts (Shield Out). Data pertaining to a 1-min count taken without the delta shield in place.

25. Down Counts (Shield In). Data pertaining to a 1-min count taken with the delta shield in place.

26. Delta. The difference between the up and down count rates (shield in and shield out).

$$\text{Delta} = \text{up counts} - \text{down counts}$$

27. Above Criteria. A flag on the data form that marks the location for further study. YES (Y) indicates that the measurement made at the location meets the criteria for further consideration (as described in Sections 3.2.3.E. and F.). NO (N) indicates that the location does not require further study.

STANDARD OPERATING PROCEDURE 6.9

EXPOSURE RATE MEASUREMENTS USING A PRESSURIZED IONIZATION CHAMBER

1. PURPOSE

To describe the equipment and proper method to determine the gamma exposure rate at a height of one meter above the soil or other surfaces using a pressurized ionization chamber (PIC).

2. DISCUSSION

The PIC is an extremely accurate instrument for measuring gamma radiation exposure rates in the field. The PIC can be used to field calibrate or standardize portable instruments (like hand-held scintillometers) measuring exposure rates. The Remedial Investigation Plan (RIP) provides information concerning the scope and details of the site-specific investigation.

3. PROCEDURE

3.1. Associated Procedures

Information that applies to most field activities is provided in SOPs 1.1-1.10. In addition to the RIP, those SOPs provide guidance that may supplement the information in this procedure. They should be consulted as necessary to obtain specific information about equipment and supplies; sample collection, preservation, packaging, and shipping; decontamination procedures; and documentation requirements. Procedures directly associated with this SOP are listed below.

SOP No.	SOP Title
1.1	General Instructions for Field Personnel
1.6	General Equipment Decontamination
6.10	Correlation of a Sodium Iodide Detector to the Pressurized Ionization Chamber

3.2. Preparation

3.2.1. Office

A. Review the RIP and SOPs listed in Section 3.1.

B. Coordinate schedules and activities with the installation staff.

C. Obtain appropriate permission for property access.

D. Assemble the equipment and supplies listed in Appendix 5.1. Ensure the proper operation of all field equipment. Follow the steps listed below to check the PIC.

1. Turn on the display/recorder switch.

2. Turn the electrometer switch to zero.

3. Turn the mode switch to the BATT position.

4. Depress the push-to-read switch (located below the digital display device) and the switch designated 300 volts (V) simultaneously.

5. If the digital display shows less than 85 (as a % of charge), replace the 300-V battery according to the operational manual.

6. Check the charge on the -14-V, +14-V, and 12-V lead-acid batteries by depressing the switch immediately below the voltmeters for each battery. If the needle is on or near the shaded area of the meter, recharge these batteries before proceeding.

3.2.2. <u>Documentation</u>

A. Obtain a logbook from the QA officer.

B. Record results of the equipment check in the logbook.

C. Obtain a sufficient number of the appropriate ER Program data collection forms (see INDEX TO SOPs).

D. Consult the ER Program data administrator for a current list of information management codes, location IDs, and sample numbers used in the completion of data forms.

3.2.3. <u>Field</u>

A. Attach the sensor head to the tripod.

B. Adjust the height of the chamber to one meter from the surface to be measured.

CAUTION: Ensure that the electrometer and mode switches are both in the off position.

C. Connect the cable to the readout housing and the sensor head.

3.3. Operation

3.3.1 <u>Exposure Rate Measurements</u>

A. Place the mode switch in the DC position.

B. Place the electrometer switch in the zero position and wait 60 sec.

C. Place the electrometer switch in the read position.

D. Turn the recorder on (if recorder is included).

E. Reset the mechanical counter and start the stopwatch simultaneously.

F. After about 10 min and at the time that the counter indicates the next 1-microR integral, record the elapsed time and exposure.

G. Determine the exposure rate in microR/hr (μR/hr) with the formula shown below.

$$\text{Exposure rate } (\mu\text{R/hr}) = \frac{60 \text{ (min)}}{\text{(hr)}} * \frac{\text{exposure recorded by PIC } (\mu\text{R})}{\text{count time (min)}}$$

H. Perform a background measurement. Normal background readings at sites not exhibiting high radionuclide content may range from 5 to 20 μR/hr because of cosmic and terrestial radiation. Measurements taken in areas of known background exposures that are outside of this range may indicate a mechanical problem in the instrument and should be investigated.

I. Record the exposure rate and the other information on the Exposure Rate Data form (Appendix 5.2). Instructions for this form are in Appendix 5.3, Data Form Completion.

3.4. Postoperation

3.4.1. Field

A. Turn the electrometer and mode switches to the off position.

B. Ensure that all equipment is accounted for, decontaminated (see SOP 1.6, General Equipment Decontamination), and ready for shipment.

C. If necessary, make sure all survey locations are properly staked and the location ID is readily visible on the location stake.

3.4.2. Documentation

A. Record any uncompleted work (like additional monitoring) in the logbook.

B. Complete logbook entries, verify the accuracy of entries, and sign/initial all pages.

C. Review data collection forms for completeness.

3.4.3. Office

A. Deliver original forms and logbooks to the document control officer (with copies to the site manager and files) for eventual delivery to the Department of Energy.

B. Inventory equipment and supplies. Repair or replace all broken or damaged equipment. Replace expendable items. Return equipment to the equipment manager and report incidents of malfunction or damage.

4. SOURCE

Reuter-Stokes. n.d. "Operational Manual RS5-111 Area Monitor System, Second Printing," G.E. Reuter Stokes, Twinburg, Ohio.

5. APPENDIXES

5.1. Equipment and Supplies Checklist

5.2. Exposure Rate Data Form

5.3. Data Form Completion

APPENDIX 5.1

EQUIPMENT AND SUPPLIES CHECKLIST

_____ Reuter-Stokes pressurized ionization chamber (PIC) and associated equipment

_____ Reuter-Stokes PIC operational manual

_____ Stopwatch

_____ Hand-held calculator

APPENDIX 5.2

EXPOSURE RATE DATA FORM

EXPOSURE RATE DATA

PAGE 1 OF ____

FACILITY CODE _____ PIC:

LOG DATE _____ CALIBRATION DATE _____

LOGGER CODE _____ MODEL NO _____

FIELD REP _____ SERIAL NO _____

ACCEPTANCE CODE _____ BATTERY _____

UNIT OF MEASURE _____

COMMENTS _____

INTEGRATED PIC BACKGROUND VALUE (μR/hr) _____

LOCATION ID	COORDINATES (FT)		MEASURED EXPOSURE (μR)	LAPSED TIME (MIN.)	INTEGRATED EXPOSURE RATE (μR/hr)
	NORTH	EAST			

ACCEPTANCE CODES: A—ACCEPTABLE R—RECONNAISSANCE U—UNACCEPTABLE N—NOT DETERMINED

COMPLETE BOLDED DATA FOR ENTRY INTO TIMS

ERD-129 (1/88)

FORM COMPLETED BY/DATE _____ TECHNICAL REVIEWER/DATE _____

APPENDIX 5.3

DATA FORM COMPLETION

Use a pen with black ink that is not water soluble (not a felt-tip pen). Make an entry in each blank. Where there is no data entry, enter UNK for Unknown, NA for Not Applicable, or ND for Not Done. If any procedure was not performed as prescribed, give the reason for the change or omission on the form. To change an entry, draw a single line through it, add the correct information above it, and initial the change.

EXPOSURE RATE DATA FORM

1. Facility Code. Five-character code abbreviating the facility name where program activity is being conducted. The first three characters indicate the facility, and the remaining two numbers designate the specific site within the facility.

2. Log Date. The date that information recorded on the form was obtained in the format DD-MMM-YY (01-JAN-88).

3. Logger Code. Three-character or four-character code identifying the company responsible for collecting the information recorded on the form.

4. Field Rep. The name of the field representative.

5. Acceptance Code. One-character code assigned by the site manager.

6. PIC Calibration Date. The date when the pressurized ionization chamber (PIC) was last calibrated. This data field follows the same format as the log date data field.

7. PIC Model Number. The model number of the PIC.

8. PIC Serial Number. The serial number of the PIC.

9. PIC Battery. Determine whether the battery voltage readings at the beginning of the measurement were within the limits specified in Section 3.2.1.F.

10. PIC Unit of Measure. The units in which the PIC reads. Most PIC instruments read in microR/hr (μR/hr). Consult the manufacturer's instrument manual to determine the measurement units.

11. Comments. Any additional information.

12. Integrated PIC Background Value (μR/hr). The result of a count in an area designated as background in μR/hr.

13. Location ID. Four-character code assigned sequentially to each borehole, test pit, or surface location where physical, chemical, biological, radiological, and other measurements are taken.

14. Coordinates (Ft). The coordinates of the measurement location in feet. The format is north and east.

15. Measured Exposure (μR). The PIC reading indicated on the counter at the end of the counting period in microR.

16. Lapsed Time (Min.). The time indicated on the stopwatch when the counting period has ended.

17. Integrated Exposure Rate (μR/hr). The PIC reading in μR/hr, calculated according to the equation in Section 3.3.1.G.

STANDARD OPERATING PROCEDURE 6.10

CORRELATION OF A SODIUM IODIDE DETECTOR TO THE PRESSURIZED IONIZATION CHAMBER

1. PURPOSE

To describe the method for correlating count rates obtained with a sodium iodide (NaI) detector and ratemeter/scaler to the exposure rate measurements taken with a pressurized ionization chamber (PIC).

2. DISCUSSION

The Remedial Investigation Plan (RIP) provides information on the scope of the given operation and the applicability of this procedure to the work activities.

By correlating scintillation detector measurements with accurate PIC measurements on a site-specific basis, correction factors can be determined and applied to the scintillation detector measurements to evaluate gamma-exposure rates. This procedure permits the use of less expensive and less cumbersome portable instruments to obtain survey data for exposure rates.

3. PROCEDURE

3.1. Associated Procedures

Information that applies to most field activities is provided in SOPs 1.1-1.10. In addition to the RIP, those SOPs provide guidance that may supplement the information in this procedure. They should be consulted as necessary to obtain specific information about equipment and supplies; sample collection, preservation, packaging, and shipping; decontamination procedures; and documentation requirements. Procedures directly associated with this SOP are listed below.

SOP No.	SOP Title
1.1	General Instructions for Field Personnel
1.6	General Equipment Decontamination
6.9	Exposure Rate Measurements Using a Pressurized Ionization Chamber
6.15	Measurement of Gamma-Ray Fields Using a Sodium Iodide (NaI) Detector

3.2. Preparation

3.2.1. Office

A. Review the RIP and the SOPs listed in Section 3.1.

B. Coordinate schedules/actions with the installation staff.

C. Obtain appropriate permission for property access.

D. Assemble the equipment and supplies listed in Appendix 5.1. Ensure the proper operation of all field equipment. Follow the steps below to check the PIC.

1. Turn on the display/recorder switch.

2. Turn the electrometer switch to zero.

3. Turn the mode switch to the batt position.

4. Depress the push-to-read switch (located below the digital display device) and the switch designated 300 volts (V) simultaneously.

5. If the digital display shows less than 85 (as a % of charge), replace the 300-V battery according to the PIC operational manual (or return the instrument to the factory for replacement). Check the charge on the -14-V, 14-V, and 12-V lead-acid batteries by depressing the switch below the voltmeters for each battery. If the needle is on or near the shaded area of the meter, recharge these batteries before proceeding.

3.2.2. **Documentation**

A. Obtain a logbook from the QA officer.

B. Record results of the equipment check in the logbook.

C. Obtain a sufficient number of the appropriate ER Program data collection forms (see INDEX TO SOPs).

D. Consult the ER Program data administrator for a current list of information management codes and location IDs used in the completion of data forms.

3.2.3. **Field**

A. Ensure the proper operation of the NaI probe and the ratemeter/scaler.

1. Check the battery level on the ratemeter/scaler.

2. The operating voltage, window position, and threshold setting should be at settings specified on the calibration sticker.

B. Assemble the PIC according to the operational manual.

1. CAUTION: Ensure that the electrometer and mode switches are in the off position.

2. Attach the sensor head to the tripod.

3. Adjust the height of the chamber to one meter from the surface to be measured.

4. Connect the cable to the readout housing and the sensor head.

3.3. Operation

3.3.1. Measurements Using the PIC

A. Complete the Exposure Rate Correlation Data form (Appendix 5.2) as instructed in Appendix 5.3. (Data Form Completion).

B. For making measurements with the PIC, follow the steps listed below.

1. Place the mode switch in the DC position.

2. Place the electrometer switch in the zero position and wait 60 sec.

3. Place the electrometer switch in the read position.

4. Turn the recorder on (if a recorder is included).

5. Reset the mechanical counter and start the stopwatch simultaneously.

6. After about 10 min and at the time that the counter indicates the next 1-microR integral, record the elapsed time and exposure.

7. Determine the exposure rate in microR/hr (μR/hr) with the formula shown below.

$$\text{Exposure rate } (\mu\text{R/hr}) = \frac{60\ (\text{min})}{(\text{hr})} * \frac{\text{exposure recorded by PIC } (\mu\text{R})}{\text{count time (min)}}$$

3.3.2. Correlation of the PIC and NaI Measurements

A. Perform a background measurement using both the PIC and the NaI scintillometer. Operational instructions for the instruments are provided in SOP 6.9, Exposure Rate Measurements, and SOP 6.15, Measurement of Gamma-Ray Fields Using a Sodium Iodide (NaI) Detector. Use the average cpm value shown on the ratemeter for the NaI scintillometer. Normal background readings at sites not exhibiting high radionuclide content may range from 5 to 20 μR/hr because of cosmic and terrestial radiation. Measurements taken in areas of known background exposures outside of this range may indicate a mechanical problem in the instrument and should be investigated.

B. Perform the correlation using 5 to 20 locations, ranging in activity from normal background to the maximum level of gamma exposure found at the site. There may be several areas where these correlations will be performed. It may be necessary to subdivide a site into regions where there should be similar radionuclides within a region. Choose the measurement locations so that the exposure rate does not vary with slight differences in the positioning of the two detectors. Take measurements alternately with both instruments at approximately 3 ft off the ground at each location. Record the results on the Exposure Rate Correlation Data form. Accurate correlation can only be established when a large range of exposure rates exist.

C. After performing measurements at a sufficient number of locations, correlate the readings from both instruments using a linear regression. The regression equation is shown below.

$$E = a(Em) + b$$

where

E = PIC reading in micro R/hr

a = slope of the line

Em = scintillometer reading in counts per minute

b = Y-axis intercept

Using the Y intercept and the slope from this equation, the cpm value from the NaI detector can be converted to an exposure rate (μR/hr).

3.4. Postoperation

3.4.1. Field

A. Ensure that all equipment is accounted for, decontaminated (see SOP 1.6, General Equipment Decontamination), and ready for shipment.

B. Make sure all survey locations are properly staked and the appropriate location ID is readily visible on the location stake.

C. After making certain that power switches are in the off position, replace the PIC in its case.

D. Return the portable gamma detector and the ratemeter/scaler to the appropriate storage area.

3.4.2. Documentation

A. Record any uncompleted work (like additional monitoring) in the logbook.

B. Complete logbook entries, verify the accuracy of entries, and sign/initial all pages.

C. Review data collection forms for completeness.

3.4.3. Office

A. Deliver original forms and logbooks to the document control officer (with copies to the site manager and files) for eventual delivery to the Department of Energy.

B. Inventory equipment and supplies. Repair or replace all broken or damaged equipment. Replace expendable items. Return equipment to the equipment manager and report incidents of malfunction or damage.

4. SOURCES

Reuter-Stokes. n.d. "Operation Manual RS5-111 Area Monitor System, Second Printing." G.E. Reuter-Stokes, Twinburg, Ohio.

Ludlum. 1986. "Instruction Manual Model 19 MicroR Meter." Ludlum Measurements, Inc. October 1986. Sweetwater, Texas.

5. APPENDIXES

5.1. Equipment and Supplies Checklist

5.2. Exposure Rate Correlation Data Form

5.3. Data Form Completion

APPENDIX 5.1

EQUIPMENT AND SUPPLIES CHECKLIST

_____ Sodium iodide (NaI) scintillation detector and operations manual

_____ Portable ratemeter/scaler and operations manual

_____ Connector cable

_____ Reuter-Stokes PIC and operations manual

_____ Hand-held calculator

_____ Stopwatch

APPENDIX 5.2

EXPOSURE RATE CORRELATION DATA FORM

EXPOSURE RATE CORRELATION DATA

PAGE 1 OF ____

FACILITY CODE _____ PIC:

LOG DATE _____ CALIBRATION DATE _____

LOGGER CODE _____ MODEL NO _____

FIELD REP _____ SERIAL NO _____

ACCEPTANCE CODE _____ BATTERY _____

SITE AREA CORRELATION NO _____ UNIT OF MEASURE _____

SCINTILLOMETER:

RATEMETER/SCALER MANUFACTURER _____ VOLTAGE _____

MODEL NO _____ SERIAL NO _____ CALIBRATION DATE _____

WINDOW OUT THRESHOLD _____ BATTERY _____

UNIT OF MEASURE _____

PROBE MANUFACTURER _____

MODEL NO _____ SERIAL NO _____ CALIBRATION DATE _____

BACKGROUND READINGS:

PIC _____ μR/hr SCINTILLOMETER _____ CPM

RESULTING CORRELATION FORMULA _____

COMMENTS _____

LOC ID	COORDINATES (FT)		MEASURED EXPOSURE μR	LAPSED TIME (MIN.)	INTEGRATED EXPOSURE RATE (μR/hr)	SCINTILLOMETER VALUE
	NORTH	EAST				

ACCEPTANCE CODES: A—ACCEPTABLE M—MARGINALLY ACCEPTABLE R—RECONNAISSANCE U—UNACCEPTABLE N—NOT DETERMINED

COMPLETE BOLDED DATA FOR ENTRY INTO TMS

SED-111 (1/88)

FORM COMPLETED BY/DATE _____ TECHNICAL REVIEWER/DATE _____

APPENDIX 5.3

DATA FORM COMPLETION

Use a pen with black ink that is not water soluble (not a felt-tip pen). Make an entry in each blank. Where there is no data entry, enter UNK for Unknown, NA for Not Applicable, or ND for Not Done. If any procedure was not performed as prescribed, give the reason for the change or omission on the form. To change an entry, draw a single line through it, add the correct information above it, and initial the change.

EXPOSURE RATE CORRELATION DATA FORM

1. Facility Code. Five-character code abbreviating the facility name where the program activity is being conducted. The first three characters indicate the facility, and the remaining two numbers designate the specific site within the facility.

2. Log Date. The date that information recorded on the form was obtained in the format DD-MMM-YY (01-JAN-88)

3. Logger Code. Three-character or four-character code identifying the company responsible for collecting the information recorded on the form.

4. Field Rep. The name of the field representative.

5. Acceptance Code. One-character code assigned by the site manager.

6. Site Area Correlation No. More than one set of correlations of PIC and scintillometer data may be required for a given site. The site area correlation number is a number assigned to the correlation set by the site radiological engineer.

7. PIC Calibration Date. The date when the PIC was last calibrated. This data field follows the same format as the data field for log date.

8. PIC Model No. The model number of the PIC.

9. PIC Serial No. The serial number of the PIC.

10. Battery. The battery voltage read at the beginning of the measurement.

11. PIC Unit of Measure. The unit in which the PIC reads. Most PIC instruments read in microR/hr. Consult the manufacturer's instrument manual to determine the measurement units.

12. Ratemeter/Scaler Manufacturer. The manufacturer of the ratemeter/scaler.

13. Ratemeter/Scaler Voltage. The voltage that is applied to the detector. The voltage for a sodium iodide (NaI) probe is usually about 900V and is given on the calibration sticker.

14. Ratemeter/Scaler Model No. The model number of the ratemeter/scaler.

15. Ratemeter/Scaler Serial No. The serial number of the ratemeter/scaler.

16. Ratemeter/Scaler Calibration Date. The date when the ratemeter/scaler was last calibrated.

17. Window. The window will be in the out position (unless otherwise specified).

18. Threshold. The adjustment for the lower energy level of the discriminator. This setting is determined during calibration and before using the instrument in the field.

19. Battery. The battery level at the beginning of the activity.

20. Unit of Measure. The units in which the scintillometer (NaI) reads--usually counts per minute (cpm).

21. Probe Manufacturer. The manufacturer of the NaI probe.

22. Probe Model No. The model number of the NaI probe.

23. Probe Serial No. The serial number of the NaI probe.

24. Probe Calibration Date. The date when the probe was last calibrated.

25. PIC Background Reading. The exposure rate in μR/hr as measured in an area designated as background.

26. Scintillometer Background Reading. The cpm as measured in an area designated as background.

27. Resulting Correlation Formula. The formula that can be used to convert NaI cpm values to μR/hr measurements based on the data obtained. This correlation is based on a linear regression formula given in Section 3.3.2.C.

28. Comments. Any Additional information.

29. Location ID. Four-character code assigned sequentially to each borehole, test pit, or surface location where physical, chemical, biological, radiological, and other measurements are taken.

30. Coordinates (Ft). The location of the measurement spot on the survey grid in feet. There are two fields. One field is for the north coordinate, and the other is for the east coordinate.

31. Measured Exposure (μR). The PIC reading indicated on the counter at the end of the counting period, in microR.

32. Lapsed Time (Min.). The time indicated on the stopwatch when the counting period has ended.

33. Integrated Exposure Rate (μR/hr). The PIC reading in the specified units (usually μR/hr).

34. Scintillometer Value. The scintillometer reading in cpm.

STANDARD OPERATING PROCEDURE 6.11

BETA-GAMMA RADIATION MEASUREMENTS USING A GEIGER-MUELLER DETECTOR

1. PURPOSE

To describe the methodology for measuring beta-gamma radiation levels.

2. DISCUSSION

The Remedial Investigation Plan (RIP) provides information on the scope of specific operations, related health and safety requirements, and the applicability of this procedure to the activities.

Potential hazards from radionuclides that are beta-gamma emitters (like strontium-89) arise from ingestion or inhalation and external radiation that penetrates critical body organs. Protection requires the measurement and control of internal and external pathways.

Beta and gamma radiations are considered together because many radioactive materials emit both. The techniques for measuring the two are similar. A calibration source should be selected that most closely represents the energies of the radiation field to be measured.

For survey purposes, beta-gamma measurements can be used to verify the presence of anomalous radiation levels. Because of the attenuation of the beta particles and photons by the soil, these measurements cannot be used to make a direct correlation to radionuclide concentrations in soil without a portable gamma spectrometer for field identification of the radionuclides.

For general beta-gamma radiation monitoring, the ionization chamber and the Geiger-Mueller (GM) counter are the primary instruments. Only the technique using the GM counter will be described here.

Portable GM counters have battery-operated power supplies and amplifiers. The sensitive element is a small Geiger tube contained in a probe. The probe is attached to a ratemeter/scaler that has several different scales, a time-response switch, and an audible output.

Two GM probe configurations are described in this procedure: a pancake probe and an energy-compensated tube. The pancake probe consists of a flat, thin-windowed GM tube in a shielded housing. It measures radiation coming primarily from in front of the thin window and is used for measuring beta-gamma contamination on surfaces. The energy-compensated probe is typically a thick-walled GM tube measuring 4 to 6 inches long that is covered with a material of sufficient thickness to allow consistent measurement over a broad energy range. The GM tube measures radiation from any direction and absorbed dose rates from beta-gamma radiation fields of energies greater than about 100 kilo-electron volts (keV).

2.1. Limitations

GM counters have several characteristics that can lead to erroneous results unless the user is aware of them.

A. At high radiation levels, the counter will not recover from a count soon enough to measure the next entering particle. This causes a decreased response at higher radiation levels; at extremely high levels, the response may no longer increase with increased radiation. In certain cases, the response may decrease or go to zero at very high levels.

B. At extreme temperatures, the instrument may respond erratically or not at all. Under these conditions, a check source is needed to ensure reliable behavior.

C. The GM tube is delicate and sensitive to damage if dropped or exposed to significant changes in air pressure. If a rattling sound is heard when the user blows air across the probe face, it is likely that the tube has broken. To avoid a common means of tube breakage, do not ship the probe in an unpressurized airplane.

3. PROCEDURE

3.1. Associated Procedures

Information that applies to most field activities is provided in SOPs 1.1-1.10. In addition to the RIP, those SOPs provide guidance that may supplement the information in this procedure. They should be consulted as necessary to obtain specific information about equipment and supplies; sample collection, preservation, packaging, and shipping; decontamination procedures; and documentation requirements. Procedures directly associated with this SOP are listed below.

SOP No.	Sop Title
1.1	General Instructions for Field Personnel
1.6	General Equipment Decontamination

3.2. Preparation

3.2.1. Office

A. Review the RIP and SOPs listed in Section 3.1.

B. Coordinate schedules/actions with the installation staff.

C. Obtain appropriate permission for property access.

D. Assemble the equipment and supplies listed in Appendix 5.1. Ensure the current calibration of the probe and the ratemeter/scaler.

3.2.2. Documentation

A. Obtain a logbook from the QA officer.

B. Record results of the equipment check and calibration in the logbook.

C. Obtain a sufficient number of the appropriate ER Program data collection forms (see INDEX TO SOPs).

D. Consult the ER Program data administrator for a current list of information management codes, location IDs, and sample numbers used in the completion of data forms.

3.2.3. Field

A. Take five, 1-min background counts to ensure that the probe is not contaminated and to determine contamination criteria. If the count rate is greater than normal, check for surface contamination and be sure that the high-voltage setting is as marked on the probe. Calculate the mean background, the standard deviation of the mean, and three times the standard deviation as shown below.

$$X = (x_1 + x_2 + x_3 ... + x_n) / N$$

where

X = the mean

N = number of samples

$x_1+x_2+x_3...x_n$ = summation of count results for all background counts measured

SDX = standard deviation of the mean = $(X/N)^{1/2}$

$3SDX = 3(X/N)^{1/2}$ = contamination criterion

B. Take a 1-min count using a check source (like Tc-99) to check instrument response. The efficiency of the Ludlum 44-9 is typically about 15%.

Efficiency = net counts per minute/source disintegrations per minute

3.3. Operation

3.3.1. Obtaining Measurements

A. Record beta-gamma measurements with the GM detector on the Beta-Gamma Measurements form (Appendix 5.2). Complete the form according to Appendix 5.3, Data Form Completion.

B. Place the GM probe at a small distance (one-half inch) from the location to be monitored.

NOTE: The thin window of the probe is easily punctured. Care should be taken to protect the surface from sharp objects.

C. Take a count of predetermined duration (0.5 min to 2 min) and record the count rate.

D. If using an energy-compensated GM, multiply the count rate by the calibration factor and determine the beta-gamma dose rate in millirads/hour (mrad/hr).

E. Compare the counts to the contamination criteria. The RIP may require further characterization of samples or locations exceeding these criteria. Samples or locations with counts greater than 3SDX are considered contaminated.

3.4. Postoperation

3.4.1. Field

A. Turn all switches to the off position.

B. Ensure that all equipment is accounted for, decontaminated (see SOP 1.6, General Equipment Decontamination), and ready for shipment.

C. If necessary, make sure all survey or sampling locations are properly staked and the location ID is readily visible on the location stake.

3.4.2. Documentation

A. Record any uncompleted work (like additional monitoring) in the logbook.

B. Complete logbook entries, verify the accuracy of entries, and sign/initial all pages.

C. Review data collection forms for completeness.

3.4.3. Office

A. Deliver original forms and logbooks to the document control officer (with copies to the site manager and files) for eventual delivery to the Department of Energy.

B. Ensure that all radiological sources and standards have been stored in a locked area.

C. Inventory equipment and supplies. Repair or replace all broken or damaged items. Replace expendable items. Return equipment to the equipment manager and report incidents of malfunctions or damage.

4. SOURCE

Healy, J. W. 1970. "Los Alamos Handbook of Radiation Monitoring." Los Alamos Scientific Laboratory report LA-4400. Los Alamos, New Mexico.

5. APPENDIXES

5.1 Equipment and Supplies Checklist

5.2 Beta-Gamma Measurements Form

5.3 Data Form Completion

APPENDIX 5.1

EQUIPMENT AND SUPPLIES CHECKLIST

_____ GM pancake probe (Ludlum 44-9 or the equivalent)

_____ Ratemeter/scaler (Ludlum 2220 or the equivalent)

_____ Energy-compensated GM (Ludlum 44-38 or the equivalent)

_____ Cable

_____ Beta source (TC-99 or Sr-90)

APPENDIX 5.2

BETA-GAMMA MEASUREMENTS FORM

BETA–GAMMA MEASUREMENTS

PAGE 1 OF ____

FACILITY CODE _____ LOG DATE _____

LOGGER CODE _____ FIELD REP _____

RATEMETER/SCALER: ACCEPTANCE CODE _____

MODEL NO _____ SERIAL NO _____ CALIBRATION DATE _____

VOLTAGE _____ BATTERY _____

GM PROBE:

MODEL NO _____ SERIAL NO _____ CALIBRATION DATE _____

AVERAGE BACKGROUND CPM _____ + 3 STANDARD DEVIATIONS = $3(\frac{\lambda}{N})^{1/2}$ = _____

SOURCE CHECK DATE/TIME _____

WINDOW OPEN (O) OR WINDOW CLOSED (C) _____

CALIBRATION FACTOR _____ (mrad/hr)/CPM

COMMENTS _____

LOC ID	COORDINATES (FT)		SAMPLE ID OR ITEM DESCRIPTION	COUNTS	COUNT TIME	CPM	mrad/hr	ABOVE CRITERIA (YES/NO)
	NORTH	EAST						

ACCEPTANCE CODES: A–ACCEPTABLE R–RECONNAISSANCE U–UNACCEPTABLE N–NOT DETERMINED

COMPLETE BOLDED DATA FOR ENTRY INTO TIMS
SGM–121 (3/88)

FORM COMPLETED BY/DATE _____ TECHNICAL REVIEWER/DATE _____

APPENDIX 5.3

DATA FORM COMPLETION

Use a pen with black ink that is not water soluble (not a felt-tip pen). Make an entry in each blank. Where there is no data entry, enter UNK for Unknown, NA for Not Applicable, or ND for Not Done. If any procedure was not performed as prescribed, give the reason for the change or omission on the form. To change an entry, draw a single line through it, add the correct information above it, and initial the change.

BETA-GAMMA MEASUREMENTS FORM

1. Facility Code. Five-character code abbreviating the facility name where program activity is being conducted. The first three characters indicate the facility, and the remaining two numbers designate the specific site within the facility.

2. Log Date. The date that information recorded on the form was obtained in the format DD-MMM-YY (01-JAN-88).

3. Logger Code. Three-character or four-character code identifying the company responsible for collecting the information recorded on the form.

4. Field Rep. The name of the field representative.

5. Acceptance Code. One-character code assigned by the site manager.

6. Ratemeter/Scaler Model No. The model number of the ratemeter/scaler.

7. Ratemeter/Scaler Serial No. The serial number of the ratemeter/scaler.

8. Ratemeter/Scaler Calibration Date. The date when the ratemeter/scaler was last calibrated.

9. Voltage. The voltage that is applied to the detector. For a pancake Geiger-Mueller (GM), this is usually about 900 volts.

10. Battery. The battery voltage reading at the beginning of the measurement.

11. GM Probe Model No. The model number of the GM probe.

12. GM Probe Serial No. The serial number of the GM probe.

13. GM Probe Calibration Date. The date when the GM probe was last calibrated.

14. Average Background cpm + 3 Standard Deviations. This field is used to establish contamination criteria for use in sample selection for analyses or general screening.

    Average background = $X = (x_1+x_2+x_3+...X_n) / N$

    where

    $x_1, x_2, x_3...x_n$ = a summation of all the background counts obtained

    N = the total number of background counts taken

    3 standard deviations = $3SDX = 3(X/N)^{1/2}$

15. Source Check Date/Time. The date and time the system was last source checked.

16. Window Open (O) or Window Closed (C). When using an energy-compensated GM, the window can be open or closed as specified in the site Health and Safety Plan. Enter N/A if using a pancake GM.

17. Calibration Factor. The calibration factor in millirads per hour (mrad/hr)/counts per minute (cpm) used to convert cpm to mrad/hr when using an energy-compensated GM. Enter N/A if using a pancake GM.

18. Comments. Any additional information.

19. Location ID. Four-character code assigned sequentially to each borehole, test pit, or surface location where physical, chemical, biological, radiological, and other measurements are taken.

20. Coordinates (Ft). The coordinates of the measurement location in feet. The format is north and east.

21. Sample ID or Item Description. The sample identification number or description of the item being counted. Enter N/A if not applicable.

22. Counts. The counts obtained over the counting period. Enter N/A if using a ratemeter.

23. Count Time. The time in minutes over which the counts were collected. Enter N/A if using a ratemeter.

24. CPM. The counts per minute obtained by dividing the total counts by the counting time or by recording the ratemeter cpm reading.

25. mrad/hr. The dose rate obtained using a calibration factor applied to an energy-compensated GM.

26. Above Criteria (Yes/No). If the counts obtained are greater than the average background + 3 standard deviations, the item or location is considered contaminated (yes). If the counts are below this criterion, the item or location is not considered contaminated (no).

STANDARD OPERATING PROCEDURE 6.12

RADON-222 FLUX MEASUREMENTS USING CHARCOAL CANISTERS

1. PURPOSE

To provide instructions for determing radon-222 flux from ground surfaces.

2. DISCUSSION

The Remedial Investigation Plan (RIP) provides information on the scope of a given operation and the applicability of this procedure to the activities. This procedure is limited to the use of charcoal canisters placed in contact with the ground and the evaluation of those canisters using gamma-ray spectrometry techniques. This measurement technique could help characterize localized radium sources if radon flux rates have been correlated to radium concentrations in soil for the area under study.

Charcoal canisters are analyzed with gamma-ray spectrometry equipment in a similar manner to the analysis of soil samples (see SOP 6.6, Use of Gamma-Spectrometry Systems as a Screen for Gamma-Ray-Emitting Radionuclides in Soil Samples). Analysis is performed with a sodium iodide crystal coupled to a multichannel analyzer. Calibration factors for the charcoal canisters are determined through a series of calibration tests with a known radon source like a blended soil pad. Calibration must be completed before field work begins.

Under rare circumstances, thorium-232 and its decay products may be present with radium-226, causing thoron and its daughters to interfere with radon flux measurements. When thorium-232 is suspected to be a contaminant, separate grab samples must be collected and their decay rates evaluated to determine if thoron is present.

3. PROCEDURE

3.1. Associated Procedures

Information that applies to most field activities is provided in SOPs 1.1-1.10. In addition to the RIP, those SOPs provide guidance that may supplement the information in this procedure. They should be consulted as necessary to obtain specific information about equipment and supplies; sample collection, preservation, packaging, and shipping; decontamination procedures; and documentation requirements. Procedures directly associated with this SOP are listed below.

SOP No.	SOP Title
1.1	General Instructions for Field Personnel
1.6	General Equipment Decontamination
6.6	Use of Gamma-Spectrometry Systems as a Screen for Gamma-Ray-Emitting Radionuclides in Soil Samples

3.2. Preparation

3.2.1. Office

A. Review the RIP and SOPs listed in Section 3.1.

B. Coordinate schedules/actions with the installation staff.

C. Obtain appropriate permission for property access.

D. Assemble the equipment and supplies listed in Appendix 5.1. Ensure the proper operation of all field equipment.

E. Notify the analytical laboratory of the number of canisters and the approximate arrival date.

3.2.2. Documentation

A. Obtain a logbook from the QA officer.

B. Record results of the equipment check in the logbook.

C. Obtain a sufficient number of the appropriate ER Program data collection forms (see INDEX TO SOPs).

D. Consult the ER Program data administrator for a current list of information management codes, location ID's, and sample numbers used in the completion of data forms.

3.2.3. Field

Before a charcoal canister is used for estimating radon flux, it must be conditioned. This is accomplished by heating the canister in an oven at a temperature of 100° C for 24 hrs. After the canister has cooled, place it in a plastic bag and seal the bag. This must be performed before the field work begins.

3.3. Operation

3.3.1 Determining Canister Exposure Time

A. Perform a 20-min background count on each canister before deployment in the field. Record pertinent data on the Radon Flux Field Data form (Appendix 5.2) by following instructions in Appendix 5.4, Data Form Completion.

B. The appropriate exposure time for canisters is a function of the local radon flux. Determine an appropriate exposure time by deploying several canisters at selected sites, some in an area representing near-background conditions and others in an area representing a near maximum radon flux.

1. Place each charcoal canister on a smooth ground surface with no grass. Mark sample locations on a map of the site area and record them on the Radon Flux Field Data form. Remove a canister from its plastic bag and twist the canister's thin-walled cylinder about 0.5 cm into the ground.

Pack soil around the canister interface for a seal. Record the location and time of emplacement on the Radon Flux Field Data form.

2. Place four canisters on the ground (as described in step 1) and seal. Remove canisters from each location--one after each exposure of 2, 6, 24, or 32 hrs. As each canister is removed from the ground, use a clean rag or paper wipe to remove loose soil, mud, and other material from the canister rim that was in contact with the ground. Place each canister in an individual plastic bag and complete all information blanks on the canister labels. Record sample identification information on the Radon Flux Field Data form. Transport the canisters to the laboratory and store them for a minimum of 4 hrs to permit the buildup of radon daughters.

3. After a minimum of 4 hrs, analyze the canisters using gamma-ray spectrometry techniques (described in Section 3.3.2.C. and D.). Use an evaluation of data from this exercise to establish optimum exposure periods.

3.3.2 Radon Flux Measurements

A. After determining the canister exposure times, perform a 20-min background count. Then deploy the regenerated canisters in the field (following instructions in Section 3.3.1.B.1.). Record pertinent data on the Radon Flux Field Data form.

B. After the optimum exposure period has ended, transport the canisters to the laboratory and store for a minimum of 4 hrs before analysis.

C. For analysis, place the canister in the counting chamber next to the detector crystal and close the shield door.

D. Reset the multichannel analyzer and count the sample for 20 min. This counting period may be varied as needed to obtain optimum counting statistics.

3.3.3 Documentation of Laboratory Data

Record pertinent laboratory data on the Radon Flux Measurement Data Form (Appendix 5.3). When the counting period has ended, record the net area [number of counts in a Region of Interest (ROI) minus the background in the ROI caused by Compton Scattering in the detectors] for the 0.609 million electron volts (MeV) photopeak from bismuth-214.

Convert from net counting rate (N_c) to radon flux (F) in picocuries (pCi)/m^2s as shown below.

A. Calculate the measured radon activity (M_{Rn}) in the sample canister with the formula below.

$$M_{Rn} \text{ (microcurie)} = (N_c/N_s)S_A$$

where

N_c=net sample count rate (CPM)
N_s=net Ra-226 standard count rate (CPM)
S_A=activity of standard (microcurie)

B. Correct this activity for radon decay during the time interval between collection and measurement as shown below.

$$M_{Rn}' = M_{Rn} * e^{[(0.00754) * t_2]}$$

where

M_{Rn}'=total Rn-222 activity collected in the canister (microcurie)
0.00754=Rn-222 decay rate ($hour^{-1}$)
t_2=time interval between collection and measurement (hours)

C. Calculate the average radon collection rate (Q), corrected for the incremental decay during the collection interval, as shown below.

$$Q\ (microCi/h) = \frac{M_{Rn}' * 0.00754}{1 - e^{-[(0.00754) * t_1]}}$$

where

t_1 = collection time interval

D. Calculate the radon flux (F) as shown below.

$$F\ (pCi/m^2/s) = \frac{Q * 10^6}{3600 * A}$$

where

A = ground surface area covered by the collector base (m^2)

3.4. Postoperation

3.4.1. Field

A. After counting, collect the used canisters and place them in an oven (100°C) for 24 hrs to purge radon from the canisters and reactivate the charcoal. An alternative purging system is a Shop-Vac exhaust combined with a heating element. This setup would reduce purging time to 10 min per canister.

B. Before the canister is used for subsequent radon flux measurements, it must be recounted to determine the background count rate for the 0.609 MeV region of interest and sealed in a plastic bag.

C. Ensure that all equipment is accounted for, decontaminated (see SOP 1.6, General Equipment Decontamination), and ready for shipment.

D. Make sure all survey or sampling locations are properly staked and the appropriate location ID is readily visible on the location stake.

3.4.2. **Documentation**

A. Record any uncompleted work (like additional monitoring) in the logbook.

B. Complete logbook entries, verify the accuracy of entries, and sign/initial all pages.

C. Review data collection forms for completeness.

3.4.3. **Office**

A. Deliver original forms and logbooks to the document control officer (copies to the site manager and files) for eventual delivery to the Department of Energy.

B. Inventory equipment and supplies. Repair or replace all broken or damaged equipment. Replace expendable items. Return equipment to the equipment manager and report incidents of malfunction or damage.

C. If canisters were shipped off the site, contact the analytical laboratory to ensure that samples arrived safely and that instructions for sample analyses are clearly understood.

4. SOURCE

Kretz, N. D. 1980. "Selection, Testing and Calibration of the Radon Flux Measurement System." In Radon Release and Dispersion from an Open Pit Uranium Mine, 11-23. NUREG/CR-1583. Argonne National Laboratory, Argonne, Illinois.

5. APPENDIXES

5.1. Equipment and Supplies Checklist

5.2. Radon Flux Field Data Form

5.3. Radon Flux Measurement Data Form

5.4. Data Form Completion

APPENDIX 5.1

EQUIPMENT AND SUPPLIES CHECKLIST

_____ Charcoal canisters

_____ Plastic bags (12 inches x 12 inches x 0.003 inch thick)

_____ Masking tape

_____ Sample container labels

_____ Waterproof ink pens

_____ Sample collection forms

_____ Watch

_____ Drying oven

_____ Hand-held calculator

APPENDIX 5.2

RADON FLUX FIELD DATA FORM

RADON FLUX FIELD DATA

PAGE 1 OF ___

FACILITY CODE _____ LOG DATE _____

LOGGER CODE _____ FIELD REP _____

ACCEPTANCE CODE _____

COMMENTS _____

LOCATION ID OR DESCRIPTION	COORDINATES		SAMPLE ID	CANISTER SERIAL NO	DATE REGENERATED	CANISTER BKG (CPM)	DATE/TIME INSTALLED	INSTALLED BY	DATE/TIME REMOVED	REMOVED BY
	NORTH	EAST								

ACCEPTANCE CODES: A–ACCEPTABLE R–RECONNAISSANCE U–UNACCEPTABLE N–NOT DETERMINED

COMPLETE BOLDED DATA FOR ENTRY INTO TIMS

RFF-113 (1/88)

FORM COMPLETED BY/DATE _____

TECHNICAL REVIEWER/DATE _____

APPENDIX 5.3

RADON FLUX MEASUREMENT DATA FORM

RADON FLUX MEASUREMENT DATA

PAGE ____ OF ____

FACILITY CODE _____ LOG DATE _____

LOGGER CODE _____ FIELD REP _____

ACCEPTANCE CODE _____

SAMPLE ID	CANISTER SERIAL NO	BACKGROUND CPM	GROSS SAMPLE COUNT RATE	NET SAMPLE COUNT RATE	DATE COUNTED	TIME COUNTED	t_1 HOURS	t_2 HOURS	F pCi/m^2 - sec

RFM - 118 (2/88)

APPENDIX 5.4

DATA FORM COMPLETION

Use a pen with black ink that is not water soluble (not a felt-tip pen). Make an entry in each blank. Where there is no data entry, enter UNK for Unknown, NA for Not Applicable, or ND for Not Done. If any procedure was not performed as prescribed, give the reason for the change or omission on the form. To change an entry, draw a single line through it, add the correct information above it, and initial the change.

RADON FLUX FIELD DATA FORM

1. Facility Code. Five-character code abbreviating the facility name where program activity is being conducted. The first three characters indicate the facility, and the remaining two numbers designate the specific site within the facility.

2. Log Date. The date that information recorded on the form was obtained in the format DD-MMM-YY (01-JAN-88).

3. Logger Code. Three-character or four-character code identifying the company responsible for collecting the information recorded on the form.

4. Field Rep. The name of the field representative.

5. Location ID or Description. Four-character code assigned sequentially to each borehole, test pit, or surface location where physical, chemical, biological, radiological, and other measurements are taken.

6. Coordinates. The description of the sample location on the survey grid. The two fields in the coordinate description are north and east.

7. Sample ID. The identifying code or number given to the sample.

8. Canister Serial No. A number that identifies the radon flux canister.

9. Date Regenerated. The date the canister was dried in an oven (Section 3.2.3). This data field follows the same format as the data field for log date.

10. Canister Bkg (cpm). The count rate obtained on the canister after regeneration and before exposure to a new radon flux.

11. Date/Time Installed. The date and time installed. The date follows the same format as the data field for log date. The time is given according to the 24-hr clock. The date and time are separated by a slash mark. If a canister were installed at 3:15 p.m. on November 12, 1986, this data field would contain "861112/1515."

12. Installed By. A data field that identifies the person installing the canister.

13. Date/Time Removed. The date and time the canister was removed in the same format as the date/time of installed data field.

14. Removed By. A data field that identifies the person removing the canister.

APPENDIX 5.4, Continued

RADON FLUX MEASUREMENT DATA FORM

1. Facility Code. Five-character code abbreviating the facility name where program activity is being conducted. The first three characters indicate the facility, and the remaining two numbers designate the specific site within the facility.

2. Log Date. The date that information recorded on the form was obtained in the format DD-MMM-YY (01-JAN-88).

3. Logger Code. Three-character or four-character code identifying the company responsible for collecting the information recorded on the form.

4. Field Rep. The name of the field representative.

5. Acceptance Code. One-character code assigned by the site manager.

6. Sample ID. The identifying code or number given to the sample.

7. Canister Serial No. A number that identifies the radon flux canister.

8. Background CPM. The count rate obtained on the canister before exposure to the radon flux.

9. Gross Sample Count Rate. The count rate obtained after exposure to the radon flux in the units of cpm.

10. Net Sample Count Rate. The gross count rate minus the background cpm.

11. Date Counted. The date and time that the sample was counted. This data field follows the same format as the date/time installed data field on the Radon Flux Field Data form.

12. Time Counted. The length of time that the canister was positioned in the counting chamber.

13. t_1 Hours. The length of time that the canister was deployed in the field (in hours).

14. t_2 Hours. The time interval between retrieval and measurement.

15. F pCi/m^2-sec. The radon flux (F) in picocuries per square meter-second, calculated according to the equations given in Section 3.3.3.

STANDARD OPERATING PROCEDURE 6.13

RADON-222 MEASUREMENT USING TRACK-ETCH DETECTORS

1. PURPOSE

To provide detailed procedures and overall guidelines for making long-term average radon-222 (Rn-222) concentration measurements in air with track-etch film detectors.

2. DISCUSSION

As radon and radon progeny decay, the resultant alpha particles produce radiation damage tracks in thin plastic films exposed to the air. The film detector is mounted inside the bottom of a plastic cup. A special filter installed over the mouth of the cup filters out radon daughters, as well as dust and dirt, while allowing radon gas to enter the cup. The detectors are chemically treated after exposure to make the radon and radon progeny alpha tracks visible. Tracks in a specified area are subsequently counted. The number of tracks per unit area are directly proportional to the integrated alpha exposure from the decay of the radon. The detection range is from 0.2 to 20,000 picoCuries (pCi)/liter-month.

When needed, track-etch detector cups are ordered from Terradex Corporation in advance of installation. The number of detectors ordered should include enough to install a minimum of two detectors at each location and a number of detectors for quality assurance purposes. All detectors that are to be used for a specific exposure period should come from the same batch of film detectors.

After initial installation, the film detector cups are left in place for an exposure period that depends on the anticipated radon concentration. They are retrieved and packaged in an aluminum bag, with a maximum of 10 cups per bag. The entire package, along with properly completed vendor data sheets, is shipped to the vendor for analysis.

Specific applications of track-etch detectors will be discussed in more detail in the Remedial Investigation Plan (RIP). Applications include the acquisition of a reliable, integrated measurement over long-term periods of time. The method can also be used for screening studies in a monitoring network.

3. PROCEDURE

3.1. Associated Procedures

Information that applies to most field activities is provided in SOPs 1.1-1.10. In addition to the RIP, those SOPs provide guidance that may supplement the information in this procedure. They should be consulted as necessary to obtain specific information about equipment and supplies; sample collection, preservation, packaging, and shipping; decontamination procedures; and documentation requirements. Procedures directly associated with this SOP are listed below.

SOP No.	SOP Title
1.1	General Instructions for Field Personnel
1.6	General Equipment Decontamination

3.2. Preparation

3.2.1. Office

A. Review the RIP and SOPs listed in Section 3.1.

B. Coordinate schedules/actions with the installation staff.

C. Obtain appropriate permission for property access.

D. Submit a purchase order for the purchase and readout of the detectors that includes the information listed below.

1. Specify the delivery date to be within two weeks of the planned installation date.

2. Specify the quantity of detectors desired. This should include enough to install a minimum of 2 detectors per location plus at least 10 detectors per batch to be exposed to known concentrations in a radon chamber.

3. Request detectors from the same batch of film and have the Terradex Corporation provide the batch number. Specify type SF detectors for indoor measurements and Type F detectors for outdoor measurements.

4. Specify the detector readout sensitivity required for adequate counting statistics based on the anticipated radon exposure. For Terradex Type F film detectors, the maximum readout area is 19.3mm^2 for a sensitivity of 0.2 pCi/liter-month. This maximum sensitivity is necessary for outdoor, near-background radon concentrations.

E. Inspect the shipment of film detector cups by checking the aluminum bags for holes or tears after they arrive from Terradex.

F. Check the contents of each bag for crushed cups by feeling along the entire length of the aluminum bag. Do not open the bag.

IMPORTANT: Do not open the sealed aluminum bags until the detector cups are to be installed at the monitoring location. Do not store opened bags indoors.

G. Assemble the equipment and supplies listed in Appendix 5.1. Ensure the proper operation of all field equipment.

H. Make arrangements for radon chamber exposures of control detectors. Radon chambers are located in Grand Junction, Colorado and Montgomery, Alabama.

3.2.2. Documentation

A. Obtain a logbook from the QA officer.

B. Record results of the equipment check in the logbook.

C. Obtain a sufficient number of the appropriate ER Program data collection forms (see INDEX TO SOPs).

D. Consult the ER Program data administrator for a current list of information codes and location ID used in the completion of data forms.

3.2.3. Field

Obtain the signature of the property owner on the Participation Form (Appendix 5.2) before setting up a monitoring station on that property. Make preliminary arrangements over the phone or by mail, if possible. Access permission arrangements should be finalized in the field before the setup of monitoring stations and the deployment of detector cups.

3.3. Operation

3.3.1. Installation of Protective Canisters

A. Record all site information and data on the Alpha Track Dosimeter Data form (Appendix 5.4) by following instructions in Appendix 5.5, Data Form Completion.

B. Attach the protective canister to a fence post, telephone pole, or other suitable location at a height of 3 to 4 ft. In unusual situations like significant snow accumulation, the detectors may be placed as high as 6 ft from the ground surface. Mount the protective canister securely with no obstructions to the free flow of air past the filter. Avoid walls of buildings, highway structures, or large signs. If a potential exists for damage by animals (like cows), use multiple posts to provide a shield for the detector.

C. Alternatively, place the detector cup inside a larger stand-alone shelter so that the detector cup is at least 6 inches from any obstruction. Install the detector cup with the open mouth facing down.

3.3.2. Assembly and Installation of Radon Film Detector Cups

NOTE: Schedule the installation at each location so that all film cups can be installed on the same day a bag is opened (if possible). Do not use film detector cups that have been stored in an opened bag for longer than 24 hrs. Do not store opened bags in a structure overnight. Save the aluminum bags for use when the film detector cups are retrieved.

A. At the monitoring location, open one aluminum bag and remove the film detector cups needed for installation, making sure to close the bag after removal.

B. Visually inspect the film detector to ensure that it is securely fastened to the bottom of the cup. If the film is not secured to the bottom of the cup, secure it. Do not touch the film.

NOTE: If the film is touched, use a different cup and detector. Write down the serial number of the breached cup on the Alpha Track Dosimeter Data form and indicate what happened in the comments section. Do not return this detector cup to Terradex.

C. Take one filter and cover the mouth of the cup. The shiny side of the filter should be facing outward.

D. Take one red cover ring. Holding the filter taut, firmly push the cover ring over the two sets of ribs on the cup.

E. Inspect the fully assembled detector and ensure that the filter covers the entire mouth of the cup, there are no large wrinkles in the filter, and the filter has not been torn or punctured during assembly.

F. Install the film detector cup at the monitoring location inside the protective canister or shelter.

G. Enter the appropriate information On the Alpha Track Dosimeter Data form, (discussed in Section 3.3.1.A. and Appendix 5.5).

H. On the Radon Monitoring Location Description form (Appendix 5.3), record directions to the location. Include a description of the location so that the detector cup can be located easily by other field personnel.

3.3.3. Detector Calibration Procedure

Expose detector cups to the radon calibration chamber for quality control (QC) purposes approximately two weeks before retrieving the exposed field cups. Follow instructions in earlier sections of this SOP for handling the detector cups.

A. Remove the detector cups that are to be set aside for QC purposes from the aluminized bag. The detectors will be from the same Terradex batch as the field detectors. For each Terradex batch used in the field, at least 10% of the detectors should be exposed to known radon concentrations. Do not expose the detectors serving as blanks.

B. Flush the bag containing the remaining blank detectors (if any) with aged air or nitrogen and seal the bag with strapping tape. Fold the bag at least twice before sealing. If unexposed detectors are in the bag, store them in a container that has been flushed with nitrogen or aged air.

C. Place the assembled film detector cups into the radon calibration chamber and record the insertion time. Place the cups in the chamber with no obstruction within 4 inches of the filter surface.

D. Leave the cups in the chamber for an integrated exposure (pCi/liter-day) that equals expected field exposures. For example, a 90-day field exposure at 0.5 pCi/liter is equivalent to 45 pCi/liter-day. If possible, adjust chamber temperature and humidity to the typical field conditions.

E. Remove the cups requiring shorter exposures, leaving the remaining cups for longer exposures. Make exposures at multiple concentrations for each set of calibration detectors and record removal times.

F. Flush the removed cups with nitrogen or aged air and place the cups in the aluminized bag. Flush the bag with nitrogen or aged air and seal the bag.

G. Combine the QC detector cups with the bags of field exposed detector cups and ship them to the vendor for analysis. Do not identify the QC detector cups in the documentation sent to the readout laboratory.

3.3.4. **Retrieval of Radon Film Detectors**

A. Remove the film detector cup from the canister and wipe off any dust or dirt on the outside of the cup. Remove the red cover ring and filter from the mouth of the cup.

B. Inspect the filter by holding it up to the light. Note any damage to the filter in the comments section of the Alpha Track Dosimeter Data form (for example, pinholes, scratches, and tears). Also note any significant dust loading that has occurred on the filter.

C. Visually inspect the film on the bottom of the cup. Note any discoloration or damage to the film in the comments section of the Alpha Track Dosimeter Data form. If the filter has deteriorated or the detector has been damaged, do not return that detector cup to Terradex.

D. Enter the removal date on the Alpha Track Dosimeter Data form and place the film detector cup in the aluminized bag.

E. Stack the exposed cups in the aluminized bag with the open end facing down. If an empty cup is provided, place it in the bag first and stack the detector cups on it to enclose each cup. The use of yellow plastic separator sheets between each cup is optional. Avoid opening the aluminized bag in areas with elevated radon concentrations if near-background exposed detectors are in the same bag. If necessary, install new cups. If an end cup is not provided, place a yellow plastic separator sheet over the mouth of the last film detector cup and secure it with one of the red cover rings.

F. Fold the open end of the aluminum bag and seal it with tape. Do not exceed 10 cups per bag.

3.4. **Postoperation**

3.4.1. **Field**

A. Ensure that all aluminized bags containing the exposed detectors are sealed and have no pinholes or tears.

B. Ship the detectors to the vendor for readout.

3.4.2. **Documentation**

A. Record any uncompleted work in the logbook.

B. Complete logbook entries, verify the accuracy of entries, and sign/initial all pages.

C. Review data collection forms for completeness.

D. Transcribe selected data from the Alpha Track Dosimeter Data form to the vendor's data sheets. Transcribe the serial numbers and dates installed and retrieved onto the vendor's data sheets. Do not transcribe specific location information.

E. Complete the vendor's preshipping checklist. Specify the readout sensitivity and any special handling instructions. Include this information with the data collection forms and detectors.

3.4.3. Office

A. Deliver original forms and logbooks to the document control officer (with copies to the site manager and files) for eventual delivery to the Department of Energy.

B. Inventory equipment and supplies. Repair or replace all broken or damaged equipment. Replace expendable items. Return equipment to the equipment manager and report incidents of malfunction or damage.

C. Contact the vendor to ensure that the detector cups arrived safely and instructions for analyses are understood.

4. SOURCES

Alter, H. Ward, and Robert L. Fleisher. 1981. "Passive Integrating Radon Monitor for Environmental Monitoring." Health Physics 40: 693.

TC (Terradex Corporation). n.d. "Instructions for Track-Etch Type F Radon Detectors." Terradex Corporation report. Terradex Tech-Ops, Inc., Glenwood, Illinois.

5. APPENDIXES

5.1. Equipment and Supplies Checklist

5.2. Participation Form

5.3. Radon Monitoring Location Description Form

5.4. Alpha Track Dosimeter Data Form

5.5. Data Form Completion

APPENDIX 5.1

EQUIPMENT AND SUPPLIES CHECKLIST

_____ Radon film detector cups, Terradex Corporation

_____ Filters, Terradex Corporation

_____ Yellow plastic separator sheets, Terradex Corporation

_____ Red retaining rings, Terradex Corporation

_____ Outdoor protective canisters

_____ Fence posts

_____ Hose clamps or wire for attaching canisters to posts

_____ Filament tape

_____ Radon calibration chamber, if available

APPENDIX 5.2

PARTICIPATION FORM

I/We agree to participate in the radiological monitoring program for the purpose of determining radiation levels as described in the discussion with me/us on _____ with _____, contractors of the U.S. Department of Energy.
(DATE) (EMPLOYEE NAMES)

To this end, _____, their contractor personnel, and agents of the
(EMPLOYEE NAMES)
U.S. Department of Energy are hereby given permission to enter upon the property described below.

Type of Monitor: Track Etch Cups

Monitoring Location: Outdoor ( ) Indoor ( )

_____
Name(s)

_____
Signature of owner(s) of property
or authorized representative(s)

_____
Date

Address (Property Location):

_____

_____

_____

(Telephone)

Owner's address and telephone
if different from Property Location:

_____

_____

_____

(Telephone)

APPENDIX 5.3

RADON MONITORING LOCATION DESCRIPTION FORM

DATE:

LOCATION NUMBER:

SAMPLE TYPE:

DIRECTIONS TO LOCATION:

DESCRIPTION OF LOCATION:

_____

Technician's Name

APPENDIX 5.4

ALPHA TRACK DOSIMETER DATA FORM

ALPHA TRACK DOSIMETER DATA

FACILITY CODE _____ LOG DATE _____

LOGGER CODE _____ ACCEPTANCE CODE _____

COMMENTS _____

LOCATION ID	COORDINATES (FT)		SERIAL NO	DATE OPENED	INSTALLATION		REMOVAL		I OR O[1]	F[2] B INS	TERRADEX DATE		RESULTS
	NORTH	EAST			DATE	FIELD REP	DATE	FIELD REP			TO	FROM	

[1] I -- INDOOR
O -- OUTDOOR

[2] F -- FILTERED
B -- BARE
INS -- INSULATED

ACCEPTANCE CODES: A--ACCEPTABLE R--RECONNAISSANCE U--UNACCEPTABLE N--NOT DETERMINED

COMPLETE BOLDED DATA FOR ENTRY INTO TMS
ATD-116 (2/86)

FORM COMPLETED BY/DATE _____

TECHNICAL REVIEWER/DATE _____

APPENDIX 5.5

DATA FORM COMPLETION

Use a pen with black ink that is not water soluble (not a felt-tip pen). Make an entry in each blank. Where there is no data entry, enter UNK for Unknown, NA for Not Applicable, or ND for Not Done. If any procedure was not performed as prescribed, give the reason for the change or omission on the form. To change an entry, draw a single line through it, add the correct information above it, and initial the change.

PARTICIPATION FORM

1. Complete the top section of the form with the current date and the names of the employees installing the monitors.

2. Check the appropriate description to indicate if detectors are installed outdoors or indoors.

3. Complete the property location description in the lower left section of the form.

4. Indicate the address and phone number for the owner or authorized representative in the lower right section of the form. If the information is the same as for the property location description, it is not necessary to repeat it.

5. Obtain signatures from the owners or their representatives on the appropriate lines in the middle of the form. Ensure that the current date is inscribed below the signatures.

APPENDIX 5.5

DATA FORM COMPLETION

RADON MONITORING LOCATION DESCRIPTION FORM

1. Date. The date the location was selected.

2. Location Number. Four-character code assigned sequentially to each monitoring location.

3. Sample Type. Description of the type of measurement being conducted. Information should indicate whether the location is indoors or outdoors, if the monitor is type F (filtered) or type B (bare), and if it was insulated.

4. Directions to Location. Clear, concise instructions that indicate where the monitor is mounted.

5. Description of Location. Comments about the type of monitoring location. Pertinent information may include the following designations: rural, residential, commercial, open area, near structures, distance from the ground, and others as necessary.

6. Technician's Name. Signature of the individual who selected the location.

APPENDIX 5.5

DATA FORM COMPLETION

ALPHA TRACK DOSIMETER DATA FORM

1. Facility Code. Five-character code abbreviating the facility name where program activity is being conducted. The first three characters indicate the facility, and the remaining two numbers designate the specific site within the facility.

2. Log Date. The date that information recorded on the form was obtained in the format DD-MMM-YY (01-JAN-88).

3. Logger Code. Three-character or four-character code identifying the company responsible for collecting the information recorded on the form.

4. Acceptance Code. One-character code assigned by the site manager.

5. Comments. Any additional information.

6. Location ID. Four-character code assigned sequentially to each borehole, test pit, or surface location where physical, chemical, biological, radiological, and other measurements are taken.

7. Coordinates (Ft). The location of the spot where alpha track dosimeters were installed relative to the survey grid. There are two coordinate fields, north and east, described in feet.

8. Serial No. The serial number of the alpha track dosimeter.

9. Date Opened. The date that the package of alpha track dosimeters was opened.

10. Installation. Installation information consists of two fields, the installation date and the name of the field representative. The data field for date follows the same format as the data field for log date (DD-MMM-YY).

11. Removal. Removal information consists of two fields, the removal date and the name of the field representative. The data field for date follows the same format as the data field for log date (DD-MMM-YY).

12. I or O. A description of the monitoring location. An I designates an indoor location, and an O designates an outdoor location.

13. F,B,and INS. A description of the alpha track dosimeters. An F designates a filtered dosimeter; a B designates a bare dosimeter. An INS designates insulated.

14. Terradex Date Information. This consists of two fields, the date that dosimeters are sent to the manufacturer for counting and the date that results are received. Both of these data fields follow the same format as the data field for log date (DD-MMM-YY).

15. Results. The radon concentration reported by the vendor.

STANDARD OPERATING PROCEDURE 6.14

WORK AREA RADON MEASUREMENTS IN AIR

1. PURPOSE

To describe the methods used to collect grab samples of ambient air and the subsequent quantitative analyses of the samples to determine radon-222 gas concentrations in the work area.

2. DISCUSSION

These procedures apply when it is desired to measure the radon gas concentration over a short period of time in normal work or environmental conditions. Personnel protection decisions may then be based on these short-term measurements.

Measurement of radon gas concentrations in ambient air (picoCuries per liter) may be required periodically at locations on or near site boundaries and in areas off the site. Requirements for radon monitoring should be addressed in the Remedial Investigation Plan (RIP). These procedures will be used for preliminary screening to determine if long-term measurements are required.

3. PROCEDURE

3.1. Associated Procedures

Information that applies to most field activities is provided in SOPs 1.1-1.10. In addition to the RIP, those SOPs provide guidance that may supplement the information in this procedure. They should be consulted as necessary to obtain specific information about equipment and supplies; sample collection, preservation, packaging, and shipping; decontamination procedures; and documentation requirements. Procedures directly associated with this SOP are listed below.

SOP No.	SOP Title
1.1	General Instructions for Field Personnel
1.6	General Equipment Decontamination

3.2. Preparation

3.2.1. Office

A. Review the RIP and SOPs listed in 3.1.

B. Coordinate schedules/actions with the installation staff.

C. Obtain appropriate permission for property access.

D. Assemble the equipment and supplies listed in Appendix 5.1. Ensure the proper operation of all field equipment.

3.2.2. **Documentation**

A. Obtain a logbook from the QA officer.

B. Record results of the equipment check in the logbook.

C. Obtain a sufficient number of the appropriate ER Program data collection forms (see INDEX TO SOPs).

D. Consult the ER Program data administrator for a current list of information codes and location IDs used in the completion of data forms.

3.2.3. **Field**

A. Check the efficiency of the EDA/RDA 200 analyzer by counting the standard test cell in the following manner. Remove the cap from the counting chamber, remove the plastic cover from the bottom of the cell, and insert the cell into the chamber with the glass side down. Replace the cap and screw it tightly in place.

B. After the chamber has been closed for 2 to 3 min, turn the EDA/RDA 200 on by pulling out the power switch and moving it to the internal position. Set the toggle switch to the Ra position. Set the counting period knob to 1 min and push the sample button to initiate the counting sequence. A red light will flash while counting. Do not open the counting chamber during the counting sequence.

C. When the red light stops flashing, push the display button and record the result on the Cell Background Log form (Appendix 5.2). Instructions are in Appendix 5.4, Data Form Completion. Compare the count rate with the average count rate indicated on the standard cell's sticker. If they differ by more than 10%, obtain another instrument.

D. Perform a background count for each sample collection cell. Purge each cell by inserting male swagelock connectors into both of the female connectors on the cell until they are fully connected (as distinguished by an audible click) and slowly flushing aged air or nitrogen through the cell for 3 to 5 min. Let the cells stand in a dark place for 4 hrs, then count them for 30 min each in the same manner as the standard cell. Record the results on the Cell Background Log form. Turn off the EDA/RDA 200 when all cell backgrounds are completed.

E. The calibration factor for the type of scintillation cell used has been determined by exposing a number of cells to a known radon concentration at a radon calibration facility. The calibration factors for the scintillation cells should be displayed on a calibration sticker on each cell. Do not use the cell if a calibration factor is not available.

3.3. **Operation**

3.3.1 **Obtaining Samples**

A. Load a 25-mm-diameter filter into an open-faced filter holder assembly with forceps, ensuring that the rough irregular pattern faces outward. Screw the

O-ring and retaining cover onto the filter, ensuring a tight fit without buckling the filter paper.

B. Secure the filter holder assembly to one of the swagelock connectors on a calibrated scintillation cell. Push hard until a full connection is achieved (distinguishable by an audible click).

C. Connect the rotometer and pump to the other swagelock connector of the scintillation cell using clean tygon tubing.

D. Pull a filtered sample of air through the scintillation cell for 2 to 5 min, producing a minimum of 20 air exchanges. Seal the cell by quickly removing both swagelock connectors after turning the pump off. Complete the appropriate blanks on the Radon Gas Concentration Data form (Appendix 5.3) as directed in Appendix 5.4, Data Form Completion.

3.3.2. Sample Counting

A. Wait at least 3 hrs, but no more than 20 hrs, before counting the sample in the EDA/RDA 200. Unthread the cap retaining the ring from the detector counting chamber and remove the flat cap. Make sure the power switch is in the off position when opening the detector.

B. Remove the black cover from the scintillation cell.

C. Insert the scintillation cell onto the counting chamber and put on the extended cap. Thread the retaining ring onto the cap.

D. Wait at least 2 to 3 min between the time the scintillator cell was introduced into the counting chamber and the actual counting begins. This ensures that no accidental light exposure contributes to the counting.

F. Set the time selector knob on the EDA/RDA 200 console to 30 min.

F. Set the Ra/Am switch to the Ra position.

G. Set the power toggle switch to internal to use battery power.

H. Push the start button to begin counting. Note the start time of counting on the Radon Gas Concentration Data form in Appendix 5.3.

I. At the end of a 30-min counting sequence, note the counts displayed on the LED register. Enter the counts per minute (cpm) on the Radon Gas Concentration Data form.

J. Remove the scintillation cell from the counting chamber. Cover the scintillation cell with the black cell cover.

3.4. Postoperation

3.4.1. Field

A. Turn all instrument switches to the off position.

B. Flush the scintillation cell as soon as possible with a source of clean, uncontaminated air or nitrogen to curtail the buildup of long-lived radon daughters.

C. Ensure that all equipment is accounted for, decontaminated (see SOP 1.6, General Equipment Decontamination), and ready for shipment.

D. If appropriate, make sure all survey or sampling locations are properly staked and the location ID is readily visible on the location stake.

3.4.2. **Documentation**

A. Complete logbook entries, verify the accuracy of entries, and sign/initial all pages.

B. Review data collection forms for completeness.

C. Ensure that the count start and stop times and the gross alpha counts are recorded on the Radon Gas Concentration Data form. Using these data, record the sample cpm and corrected counts on the Radon Gas Concentration Data form.

D. Determine the build-in factor and decay factor using the formulas and information at the bottom of the Radon Gas Concentration Data form.

E. Calculate the radon concentration of the sample using the formula on the Radon Gas Concentration Data form. Record the results on the form and in the logbook.

3.4.3. **Office**

A. Ensure that all radiological sources and standards have been stored in a locked area.

B. Deliver original forms and logbooks to the document control officer (with copies to the site manager and files) for eventual delivery to the Department of Energy.

C. Inventory equipment and supplies. Repair or replace all broken or damaged equipment. Replace expendable items. Return equipment to equipment manager and report incidents of malfunction or damage.

4. SOURCES

EDA. n.d. "Operation Manual RDA-200 Radon/Radon Daughter Detector." EDA Instruments, Inc., Wheatridge, Colorado.

EPA. 1986. "Interim Indoor Radon and Radon Decay Product Measurement Protocols." U.S. Environmental Protection Agency report EPA 520/1-86-04, April 1986. Washington, D.C.: U.S. Government Printing Office.

EPA. 1986. "Implementation Strategy for the Radon/Radon Progeny Measurement Proficiency Evaluation and Quality Assurance Program." U.S. Environmental

Protection Agency report EPA 520/1-86-03, February 1986. Washington, D.C.: U.S. Government Printing Office.

5. APPENDIXES

5.1. Equipment and Supplies Checklist

5.2. Cell Background Log Form

5.3. Radon Gas Concentration Data Form

5.4. Data Form Completion

APPENDIX 5.1

EQUIPMENT AND SUPPLIES CHECKLIST

_____ EDA/RDA 200 analyzer

_____ Scintillation cells

_____ Tygon tubing

_____ 25-mm glass fiber filters

_____ Filter holder assembly

_____ Air sampler with rotometer (2-10 liters per minute capacity)

_____ Hand-held calculator

_____ Nitrogen gas or aged air

APPENDIX 5.2

CELL BACKGROUND LOG FORM

CELL BACKGROUND LOG

PAGE 1 OF ____

FACILITY CODE _____ ACCEPTANCE CODE _____

EDA/RDA 200 SERIAL NO _____ CALIBRATION DATE _____

CHECK CELL:

ISOTOPE _____ COUNT RATE _____ (CPM) SERIAL NO _____

SOURCE CHECK
METER READING _____ COUNTS/ _____ MIN = _____ CPM

IS METER READING +/- 10% OF CHECK CELL COUNT RATE Y OR N ? ____

COMMENTS _____

CELL ID NO	LOG DATE	LOGGER CODE	FIELD REP	TOTAL COUNTS	TOTAL COUNT TIME (MIN)	CHAMBER BACKGROUND COUNT RATE (CPM)

ACCEPTANCE CODES: A-ACCEPTABLE R-RECONNAISSANCE U-UNACCEPTABLE N-NOT DETERMINED

COMPLETE BOLDED DATA FOR ENTRY INTO TIMS
CBL-118 (3/88)

FORM COMPLETED BY/DATE _____ TECHNICAL REVIEWER/DATE _____

APPENDIX 5.3

RADON GAS CONCENTRATION DATA FORM

RADON GAS CONCENTRATION DATA

FACILITY CODE _____ LOG DATE _____

LOGGER CODE _____ FIELD REP _____

ACCEPTANCE CODE _____ CELL I.D. NO _____ CELL FACTOR _____ CPM/pCi/l

LOCATION ID	COORDINATES (FT)		TIME OF COLLECTION	COUNT TIME		TOTAL COUNT TIME (MIN)	GROSS COUNTS	CPM	CORRECTED COUNTS (CPM–Bkg)	BF	DF	pCi/LITER	uCi/ml: pCi/L x 10^6
	NORTH	EAST		START	STOP								

ACCEPTANCE CODES: A–ACCEPTABLE R–RECONNAISSANCE U–UNACCEPTABLE N–NOT DETERMINED

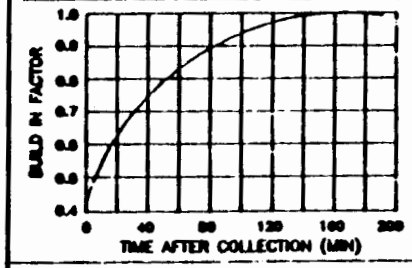

BF = Build In Factor of daughters
DF = Decay Factor of ^{222}Radon
CF = Cell Factor CPM/pCi/Liter
C_{s+b} = Counts, Sample + Background
T_{s+b} = Time, Sample + Background
C_b = Counts, Background
T_b = Time, Background

$$\text{pCi/LITER} = \frac{\left(\frac{C_{s+b}}{T_{s+b}} - \frac{C_b}{T_b}\right)}{(CF)\,(BF)\,(DF)} \pm 2\sigma$$

$$2\sigma = 2\,\frac{\sqrt{\frac{C_{s+b}}{T^2_{s+b}} + \frac{C_b}{T^2_b}}}{(CF)\,(BF)\,(DF)}$$

WHERE:

$DF = \exp(-0.693\,\Delta T/T_{1/2})$

ΔT = LAPSED TIME (Mid-time of collection to mid-time of count)

$T_{1/2}$ = HALF LIFE ^{222}RADON (5508 MINUTES)

INSTRUMENT CHECK

STANDARD ID NO _____

STANDARD DPM _____

GROSS COUNTS, CPM _____

INSTRUMENT SERIAL NO _____

COMPLETE BOLDED DATA FOR ENTRY INTO TIMS
RGC–124 (3/88)

_____ FORM COMPLETED BY/DATE

_____ TECHNICAL REVIEWER/DATE

APPENDIX 5.4

DATA FORM COMPLETION

Use a pen with black ink that is not water soluble (not a felt-tip pen). Make an entry in each blank. Where there is no data entry, enter UNK for Unknown, NA for Not Applicable, or ND for Not Done. If any procedure was not performed as prescribed, give the reason for the change or omission on the form. To change an entry, draw a single line through it, add the correct information above it, and initial the change.

CELL BACKGROUND LOG FORM

1. Facility Code. Five-character code abbreviating the facility name where program activity is being conducted. The first three characters indicate the facility, and the remaining two numbers designate the specific site within the facility.

2. Acceptance Code. One-character code assigned by the site manager.

3. EDA/RDA 200 Serial No. The serial number of the analyzer being used.

4. Calibration Date. The date when the EDA/RDA 200 analyzer was last calibrated.

5. Check Cell Isotope. The radioactive isotope contained in the check cell given as element and mass number, like Ra-226.

6. Check Cell Count Rate. The count rate of the test cell in counts per minute (cpm) given on the cell.

7. Check Cell Serial No. The serial number on the check cell.

8. Source Check Meter Reading. The results of a count on the check cell. Data consists of three fields: total counts, count time in minutes, and count rate in counts per minute.

9. Is Meter Reading +/- 10% of Check Cell Count Rate Y or N? If a count of the cell is ± 10% of that given on the cell, then the instrument is operating correctly (Y). Should the count rate fall out of these limits, repeat the check procedure (N). Upon repeated failure, consult the site safety officer.

10. Comments. Any additional information.

11. Cell ID No. The identification number permanently affixed to or on the scintillation cell.

12. Log Date. The date the information recorded on the form was obtained in the format DD-MMM-YY (01-JAN-88).

13. Logger Code. Three-character or four-character code identifying the company responsible for collecting the information recorded on the form.

14. Field Rep. The name of the field representative.

15. Total Counts. The total number of counts indicated on the display at the end of the count period.

16. Total Count Time (Min). The length of time in minutes that the scintillation cell is counted in the EDA/RDA 200 analyzer.

17. Chamber Background Count Rate (CPM). The number of counts per minute in the empty scintillation cell.

APPENDIX 5.4, Continued

RADON CONCENTRATION DATA FORM

1. Facility Code. Five-character code abbreviating the facility name where program activity is being conducted. The first three characters indicate the facility, and the remaining two numbers designate the specific site within the facility.

2. Log Date. The date the information recorded on the form was obtained in the format DD-MMM-YY (01-JAN-88).

3. Logger Code. Three-character or four-character code identifying the company responsible for collecting the information recorded on the form.

4. Field Rep. The name of the field representative.

5. Acceptance Code. One-character code assigned by the site manager.

6. Cell ID No. The identification number on the cell being used.

7. Cell Factor in CPM/pCi/*l*. This number is unique to a cell and can be found on the cell label.

8. Location ID. Four-character code assigned sequentially to each borehole, test pit, or surface location where physical, chemical, biological, radiological, and other measurements are taken.

9. Coordinates (Ft). The coordinates of the measurement location in feet. The format is north and east.

10. Time of Collection. The time at which the radon gas concentration measurement was performed in the 24-hr clock format.

11. Count Time. The time that scintillation cell counting was begun (Start) and the time that counting was completed (Stop) in the same format as the time of collection data field.

12. Total Count Time (Min). Total time of scintillation cell counting (that is, stop time minus start time) in minutes.

13. Gross Counts. The total number of counts measured for the filled cell.

14. CPM. The count rate for the scintillation cell (that is, gross counts divided by total count time) in counts per minute.

15. Corrected Counts (CPM-Bkg). The sample count rate minus the cell background count rate in cpm.

16. BF. The build-in factor of radon daughters as determined from the table at the lower left of the Radon Gas Concentration Data form.

17. DF. the decay factor of Rn-222 as determined from the equation below.

$$DF = \exp^{(-0.693 \text{ Delta } T/T_{1/2})}$$

where

$T_{1/2}$ = the half-life of Rn-222 (5508 minutes)

Delta T = the lapsed time (midtime of sample collection to midtime of count measured in minutes)

18. pCi/liter. Radon concentration in air in units of picoCuries per liter. The value to be entered into this data field is determined by the equation given at the bottom center of the form.

19. μCi/ml (microCuries per milliliter). The value at which the radon gas concentration will be reported. This value is determined by multiplying the pCi/*l* value by 10^9.

20. Standard ID No. The serial number given on the check cell (see item 7 on the Cell Background Log form instructions).

21. Standard cmp. The count rate of the check cell in counts per minute (cmp) given on the cell.

22. Gross Counts, cpm. The results of a count on the check cell given in cmp.

23. Instrument Serial No. The identification number from the EDA/RDA 200 analyzer.

STANDARD OPERATING PROCEDURE 6.15

MEASUREMENT OF GAMMA-RAY FIELDS USING A SODIUM IODIDE (NaI) DETECTOR

1. PURPOSE

To describe the procedure for making count-rate measurements of a gamma-ray field with a sodium iodide (NaI) detector.

2. DISCUSSION

The Remedial Investigation Plan (RIP) provides information on the scope of a given operation, related health and safety requirements, and the applicability of this procedure to the activities.

Gamma radiation field strengths may be used to indicate contamination by gamma emitters. Elevated count-rate data must be carefully interpreted because uncontaminated areas can demonstrate high readings if they are next to an area contaminated with gamma emitters.

Using this procedure, it is possible to identify area or point sources of gamma-emitting radionuclides and determine whether an observed reading is due to shine from an adjacent source. These techniques are outlined in Sections 3.3.2 and 3.3.3. It should be noted that these are considered gross screening techniques only, rather than determinate measures.

Count-rate data from a sodium iodide (NaI) detector can be converted to exposure rate (μR/hr) measurements if the detector has been correlated with a calibrated, pressurized ionization chamber (PIC). See SOP 6.9, Correlation of a Sodium Iodide Detector to the Pressurized Ionization Chamber.

3. PROCEDURE

3.1. Associated Procedures

Information that applies to most field activities is provided in SOPs 1.1-1.10. In addition to the RIP, those SOPs provide guidance that may supplement the information in this procedure. They should be consulted as necessary to obtain specific information about equipment and supplies; sample collection, preservation, packaging, and shipping; decontamination procedures; and documentation requirements. Procedures directly associated with this SOP are listed below.

SOP No.	SOP Title
1.1	General Instructions for Field Personnel
1.6	General Equipment Decontamination

SOP No.	SOP Title
6.9	Exposure Rate Measurements Using a Pressurized Ionization Chamber
6.10	Correlation of a Sodium Iodide Detector to the Pressurized Ionization Chamber

3.2. Preparation

3.2.1. Office

A. Review the RIP and SOPS listed in Section 3.1.

B. Coordinate schedules/actions with the installation staff.

C. Obtain appropriate permission for property access.

D. Assemble the equipment and supplies listed in Appendix 5.1. Ensure the proper operation of all field equipment. Ensure current calibration of the probe and the ratemeter/scaler.

E. Obtain PIC correlation data if these have been determined for the surveyed area.

3.2.2. Documentation

A. Obtain a logbook from the QA officer.

B. Record results of the equipment check and calibration in the logbook.

C. Obtain a sufficient number of the appropriate ER Program data collection forms (see INDEX TO SOPs).

D. Consult the ER Program data administrator for a current list of codes and location IDs used in the completion of data forms.

3.2.3. Field

A. Visually inspect the equipment, including the connector cable, for breakage.

B. Check the battery charge. If necessary, replace the batteries.

C. Set the threshold to the value given on the calibration sticker (usually 100 volts).

D. Set the detector voltage to the value given on the calibration sticker. The operating voltage for an NaI probe is usually 700 to 1000 volts.

E. Set the window to the out position (gross mode).

F. Note the response of the detector to the check source.

3.3. Operation

3.3.1. Count-Rate Measurements

A. Record the gamma count-rate measurements taken with the NaI detector on the Gamma Ray Count-Rate Data form (Appendix 5.2). Instructions to complete the form are in Appendix 5.4.

B. Turn on the instrument.

C. Hold the detector first at a height of 3 ft above the ground (waist height), then at the ground surface if an above-background level is noted. Allow the ratemeter/scaler to integrate the count rate for at least 10 sec.

D. Record the results on the Gamma Ray Count-Rate Data form.

3.3.2. Recognizing Area and Point Sources

A. Walk slowly in the area of interest, holding the NaI detector waist high and note the count rate. Determine the location of the highest observed gamma count rate (sometimes called the HOG).

B. At the HOG, compare the count rate obtained at waist height with the count rate obtained at ground level. If both count rates are above background and increase rapidly as the detector is held closer to the ground surface, the anomalous area may be an isolated hot spot with an area of only a few square feet. If the HOG is broad in extent and there is no difference in the count rate at ground level and waist height, the anomalous area probably is not highly localized.

3.3.3. Recognizing Gamma Shine from Nearby Anomalies

Walk slowly in the area of interest, holding the NaI detector at waist height. If the count rate increases while leaving the area of interest, some of the gamma count rate observed at the area of interest may be due to shine from an adjacent gamma source. If the count rate increases as the height of the detector above the ground increases, some of the gamma count rate at the area of interest may be due to shine.

3.4. Postoperation

3.4.1. Field

A. Turn all switches to the off position.

B. Ensure that all equipment is accounted for, decontaminated (see SOP 1.6, General Equipment Decontamination), and ready for shipment.

C. If necessary, make sure all survey or sampling locations are properly staked and the location ID is readily visible on the location stake.

3.4.2. Documentation

A. Record any uncompleted work (like additional monitoring) in the logbook.

B. Complete logbook entries, verify the accuracy of entries, and sign/initial all pages.

C. Review data collection forms for completeness.

3.4.3. Office

A. Deliver original forms and logbooks to the document control officer (with copies to the site manager and files) for eventual delivery to the Department of Energy.

B. Inventory equipment and supplies. Repair or replace all broken or damaged equipment. Replace expendable items. Return all field equipment to the equipment manager and identify any operational problems from previous use.

C. Ensure that all radiological sources and standards have been stored in a locked area.

4. SOURCE

Ludlum. 1982. "Instruction Manual Model 2220 Portable Scaler Ratemeter." Ludlum Measurements, Inc. April 1982. Sweetwater, Texas.

5. APPENDIXES

5.1. Equipment and Supplies Checklist

5.2. Gamma Ray Count-Rate Data Form

5.3. Data Form Completion

APPENDIX 5.1

EQUIPMENT AND SUPPLIES CHECKLIST

_____ Portable ratemeter/scaler, Ludlum 2220 (or equivalent)

_____ Sodium iodide (NaI) gamma scintillometer, Ludlum 44-10 (or equivalent)

_____ D-cell batteries (4)

_____ Connector cable

_____ Hand-held calculator

_____ Gamma check source

APPENDIX 5.2

GAMMA RAY COUNT-RATE DATA FORM

GAMMA RAY COUNT-RATE DATA

(USING SCINTILLOMETER)

PAGE 1 OF ___

FACILITY CODE _____ FIELD REP _____

LOGGER CODE _____ LOG DATE _____

ACCEPTANCE CODE _____ SITE AREA CORRELATION NO _____

RATEMETER/SCALER MANUFACTURER _____ VOLTAGE _____

MODEL NO _____ SERIAL NO _____ CALIBRATION DATE _____

WINDOW OUT THRESHOLD _____ BATTERY _____

PROBE MANUFACTURER _____

MODEL NO _____ SERIAL NO _____ CALIBRATION DATE _____

SOURCE CHECK DATE/TIME _____

LOCATION ID	COORDINATES (FT)		METER READING (CPM)		EXPOSURE RATE (μ R/hr)	
	NORTH	EAST	SURFACE	3 FT	SURFACE	3 FT

ACCEPTANCE CODES: A–ACCEPTABLE R–RECONNAISSANCE U–UNACCEPTABLE N–NOT DETERMINED

COMPLETE BOLDED DATA FOR ENTRY INTO TIMS
SED–100 (2/88)

FORM COMPLETED BY/DATE

TECHNICAL REVIEWER/DATE

GAMMA RAY COUNT-RATE DATA

(USING SCINTILLOMETER)

PAGE ___ OF ___

FACILITY CODE _____ FIELD REP _____

LOGGER CODE _____ LOG DATE _____

LOCATION ID	COORDINATES (FT)		METER READING (CPM)		EXPOSURE RATE (μ R/hr)	
	NORTH	EAST	SURFACE	3 FT	SURFACE	3 FT

COMPLETE BOLDED DATA FOR ENTRY INTO TIMS
SED-100 (3/88)

APPENDIX 5.3

DATA FORM COMPLETION

Use a pen with black ink that is not water soluble (not a felt-tip pen). Make an entry in each blank. Where there is no data entry, enter UNK for Unknown, NA for Not Applicable, or ND for Not Done. If any procedure was not performed as prescribed, give the reason for the change or omission on the form. To change an entry, draw a single line through it, add the correct information above it, and initial the change.

1. Facility Code. Five-character code abbreviating the facility name where program activity is being conducted. The first three characters indicate the facility, and the remaining two numbers designate the specific site within the facility.

2. Field Rep. The name of the field representative.

3. Logger Code. Three-character or four-character code identifying the company responsible for collecting the information recorded on the form.

4. Log Date. The date that information recorded on the form was obtained in the format DD-MMM-YY (01-JAN-88).

5. Acceptance Code. One-character code assigned by the site manager.

6. Site Area Correlation No. The number assigned to the PIC scintillometer correlation data set by the site health and safety coordinator.

7. Ratemeter/Scaler Manufacturer. The manufacturer of the ratemeter/scaler in use.

8. Voltage. The voltage that is applied to the detector. The voltage value is set to the value given on the calibration sticker.

9. Ratemeter/Scaler Model No. The model number of the ratemeter/scaler.

10. Ratemeter/Scaler Serial No. The serial number of the ratemeter/scaler.

11. Ratemeter/Scaler Calibration Date. The date when the ratemeter/scaler was last calibrated.

12. Window. The window will be in the out position unless otherwise specified.

13. Threshold. The adjustment for the lower energy level of the discriminator. The threshold value is set to the value shown on the calibration sticker.

14. Battery. The battery charge reading at the beginning of the measurement.

15. Probe Manufacturer. The manufacturer of the sodium iodide (NaI) probe.

16. Probe Model No. The model number of the NaI probe.

17. Probe Serial No. The serial number of the NaI probe.

18. Probe Calibration Date. The date when the NaI probe was last calibrated.

19. Source Check Date/Time. The date and time that the detector response to a gamma source was last checked.

20. Location ID. Four-character code assigned sequentially to each borehole, test pit, or surface location where physical, chemical, biological, radiological, and other measurements are taken.

21. Coordinates (Ft). The coordinates of the measurement location in feet. The format is north and east.

22. Meter Reading (CPM). The count rate in counts per minute. There are two fields. One field is for readings at ground level, and the other is for readings at 3 ft above the ground.

23. Exposure Rate. The exposure rate in microR/hour (μR/hr). In order to make entries into these fields, it is necessary to determine the count rate to exposure rate conversion factor for the area of the site under investigation. A calibrated microR meter can also be used for entries in these fields. One field is for readings at ground level, and the other is for readings at 3 ft above the ground.

STANDARD OPERATING PROCEDURE 6.16

HEAT STRESS MONITORING

1. PURPOSE

To outline the procedure for monitoring heat stress and other measures for protecting workers from heat exhaustion and heat stroke in warm environments.

2. DISCUSSION

The Remedial Investigation Plan (RIP) provides information on the scope of a given operation, related health and safety requirements, and the applicability of this procedure to the activities.

Heat stress is often the major hazard facing workers at hazardous waste sites, especially when respirators and clothing that is semipermeable (Tyvek coveralls) or impermeable are worn in warm or hot weather. Although monitoring heat stress is an important factor in preventing heat-related injuries, the proper planning, budgeting, and scheduling of site activities are equally important. In addition to monitoring heat stress, heat-stress problems can be mitigated by employing some of the measures described below.

- Have workers drink plenty of fluids.
- Provide shade.
- Schedule work in the early morning, evening hours, or at night.
- Schedule work during the cool part of the year.
- Provide workers with cooling vests.
- Provide workers with a cool-down room in the contaminated zone next to the area in which they are working.
- Set up a tent and refrigerate the work area.
- Have two or more crews work on alternate shifts. One or more crews can cool down, while the other crew works in the heat.

3. PROCEDURE

3.1. Associated Procedures

Information that applies to most field activities is provided in SOPs 1.1-1.10. In addition to the RIP, those SOPs provide guidance that may supplement the information in this procedure. They should be consulted as necessary to obtain specific information about equipment and supplies; sample collection, preservation, packaging, and shipping;

decontamination procedures; and documentation requirements. Procedures directly associated with this SOP are listed below.

SOP No.	SOP Title
1.1	General Instructions for Field Personnel
1.6	General Equipment Decontamination

3.2. Preparation

3.2.1. Office

A. Review the RIP, the SOPs listed in Section 3.1, and the Health and Safety Plan.

B. Obtain and confirm the accurate operation of field equipment listed in Appendix 5.1.

3.2.2. Documentation

A. Obtain a logbook from the QA officer.

B. Record results of the equipment check in the logbook.

C. Obtain a sufficient number of the appropriate ER Program data collection forms (see INDEX TO SOPs).

D. Consult the ER Program data administrator for a current list of codes used in the completion of data forms.

3.2.3. Field

A. Place a thermometer in a shaded location of the work area to measure the ambient air temperature.

B. As described in Appendix 5.3, Data Form Completion, record the time, temperature, and personnel baseline pulse rates and indicate whether the day is cloudy or sunny on the Heat Stress Monitoring Record form (Appendix 5.2).

C. Calculate the adjusted air temperature as shown below.

$$\text{ta adj } F^\circ = \text{ta } F^\circ + [13 \times (\%\ \text{sunshine}/100)]$$

where

ta F° = the temperature indicated on the thermometer in F°

3.3. Operation

3.3.1 Monitoring Heat Stress

A. Complete the Heat Stress Monitoring Record form by following instructions in Appendix 5.3.

B. Record baseline data obtained in Section 3.2.3.B. and set the timer for the period of time indicated on the National Institute of Safety and Health (NIOSH) Heat Stress Monitoring Table (Appendix 5.4).

C. When the working time has elapsed, have workers find their own pulse and count the number of times their heart beats in 15 or 30 sec. Convert pulse rates to beats per minute (bpm) and record the time and weather conditions on the Heat Stress Monitoring Record form.

D. Have the workers take a break in the shade (or cooler room) until their pulse rates drop to a value close to their baseline rates. This length of time will vary with site-specific conditions.

   1. If no crew member had a pulse rate that was above 110 bpm at the beginning of the break, continue following the suggested work durations shown in Appendix 5.4.

   2. If a crew member had a pulse rate above 110 bpm, the next work period should be two-thirds as long as the previous work period.

      EXAMPLE: It is 80°F in the shade. There is no cloud cover, and the crew is working in impermeable clothing. The effective temperature would be 93°F, and the table in Appendix 5.4 suggests a 15-min work period. If a worker had a pulse rate above 110 bpm at the beginning of a break, the next work period should be 10 min long. If hot weather conditions remain unchanged and a worker had a pulse rate above 110 bpm at the beginning of the next break, then the third work period should be shortened to 6 and 2/3 min.

E. Identify heat-sensitive workers and assign some of their duties to individuals with a lower sensitivity to heat.

F. Take appropriate action if you observe any of the early signs of heat stress listed below.

   1. Clumsiness or lack of coordination

   2. Mental confusion or poor judgment

   3. Frequent bending over or leaning against objects

   4. Going to unusual lengths to get out of sun

   5. Workers who claim that they are not too hot when demonstrating one or more of these symptoms

G. Be prepared to give first aid and transport workers suffering from severe heat stress or heat stroke to medical facilities.

3.4. Postoperation

3.4.1. Field

Ensure that all equipment is accounted for and decontaminated (see SOP 5.6, General Equipment Decontamination).

3.4.2. Documentation

A. Complete logbook entries, verify the accuracy of entries, and sign/initial all pages.

B. Review data collection forms for completeness.

3.4.3. Office

A. Deliver original forms and logbooks to the document control officer (with copies to the site manager and files) for eventual delivery to the Department of Energy.

B. Inventory equipment and supplies. Repair or replace all broken or damaged equipment. Replace expendable items. Return equipment to the equipment manager and report incidents of malfunction or damage.

4. SOURCES

American Red Cross. 1979. Standard First Aid and Personal Safety. 2d ed. Garden City, New York: Doubleday and Company, Inc.

NIOSH. 1985. "Occupational Safety and Health Guidance Manual for Hazardous Waste Site Activities." U.S. Department of Health and Human Services, Center for Disease Control, National Institute for Occupational Safety and Health, Atlanta, Georgia.

5. APPENDIXES

5.1. Equipment and Supplies Checklist

5.2. Heat Stress Monitoring Record Form

5.3. Data Form Completion

5.4. NIOSH Heat Stress Monitoring Table

APPENDIX 5.1

EQUIPMENT AND SUPPLIES CHECKLIST

_____ 60-min timer

_____ Stopwatch

_____ Thermometer

APPENDIX 5.2

HEAT STRESS MONITORING RECORD

HEAT STRESS MONITORING RECORD

FACILITY CODE _____ LOG DATE _____

LOGGER CODE _____ FIELD REP _____

ACCEPTANCE CODE _____

WORKER NO 1 NAME AND SS NO _____

WORKER NO 2 NAME AND SS NO _____

WORKER NO 3 NAME AND SS NO _____

WORKER NO 4 NAME AND SS NO _____

WORKER NO 5 NAME AND SS NO _____

TIME (HH:MM)	AIR TEMP	% SUNSHINE	ADJ TEMP (°F)	ACTIVITY CODE	PULSE RATE OF WORKER (BEATS PER MINUTE)				
					WORKER 1	WORKER 2	WORKER 3	WORKER 4	WORKER 5

ACCEPTANCE CODES: A–ACCEPTABLE R–RECONNAISSANCE U–UNACCEPTABLE N–NOT DETERMINED

ACTIVITY CODES: BL – BASELINE W – WELL SAMPLING D – DRILLING O – OTHER (SPECIFY)
M – SURFACE MEASUREMENTS BR – BREAK T – TEST PITTING S – SURFACE SAMPLING Z – OBSERVING

COMPLETE BOLDED DATA FOR ENTRY INTO TIMS

HSM–108 (1/88)

FORM COMPLETED BY/DATE _____ TECHNICAL REVIEWER/DATE _____

APPENDIX 5.3

DATA FORM COMPLETION

Use a pen with black ink that is not water soluble (not a felt-tip pen). Make an entry in each blank. Where there is no data entry, enter UNK for Unknown, NA for Not Applicable, or ND for Not Done. If any procedure was not performed as prescribed, give the reason for the change or omission on the form. To change an entry, draw a single line through it, add the correct information above it, and initial the change.

HEAT STRESS MONITORING RECORD

1. Facility Code. Five-character code abbreviating the facility name where program activity is being conducted. The first three characters indicate the facility, and the remaining two numbers designate the specific site within the facility.

2. Log Date. The date that information recorded on the form was obtained in the format DD-MMM-YY (01-JAN-88).

3. Logger Code. Three-character or four-character code identifying the company responsible for collecting the information recorded on the form.

4. Field Representative. The name of the field representative.

5. Acceptance Code. One-character code assigned by the site manager.

6. Worker Name and SS No. Name(s) and social security number(s) of the worker(s).

7. Time (HH:MM). The 24-hr clock (see conversion table below) will be used.

Conversion Table

Conventional Time	24-Hr Time
1:00 a.m.	1:00
12:00 noon	12:00
1:00 p.m.	13:00
2:00 p.m.	14:00
3:00 p.m.	15:00
4:00 p.m.	16:00
5:00 p.m.	17:00
6:00 p.m.	18:00
7:00 p.m.	19:00
8:00 p.m.	20:00
9:00 p.m.	21:00
10:00 p.m.	22:00
11:00 p.m.	23:00
12:00 midnight	24:00

8. Air Temperature. The air temperature (°F) measured in the shade.

9. % Sunshine. If cloudy, enter a 0; if sunny, enter 100. If partly cloudy, enter 50.

10. Adj. Temp (°F). The adjusted temperature in °F determined by the formula below.

$$\text{ta adj } F^\circ = \text{ta } F^\circ \, [13 \times (\%\ \text{sunshine}/100)]$$

11. Activity Code. Code describing ongoing activity.

Activity Code Table

Activity	Code
Baseline	BL
Break	BR
Drilling	DR
Grouting	GR
Logging	LO
Measurements	ME
Sampling	SA
End of Break	EB

12. Pulse Rate of Worker (Beats per minute). Pulse rate is measured in beats per minute.

APPENDIX 5.4

NIOSH HEAT STRESS MONITORING TABLE[a]

ADJUSTED TEMPERATURE[b]	NORMAL WORK EMSEMBLE[c]	IMPERMEABLE ENSEMBLE
90°F(32.2°C) or above	After each 45 minutes of work	After each 15 minutes of work
87.5°-90°F(30.8°-32.2°C)	After each 60 minutes of work	After each 30 minutes of work
82.5°-87.5°F(28.1°-30.8°C)	After each 90 minutes of work	After each 60 minutes of work
77.5°-82.°F(25.3°-28.1°C)	After each 120 minutes of work	After each 90 minutes of work
72.5°-77.5°F (22.5°-25.3°C)	After each 150 minutes of work	After each 120 minutes of work

Source: Reference [13]

[a]For work levels of 250 kilocalories/hour.

[b]Calculate the adjusted air temperature (ta adj) by using this equation: ta adj F° = ta. F° + [13 x (% sunshine/100)]. Measure air temperature (ta) with a standard mercury-in-glass thermometer, with the bulb shielded from radiant heat. Estimate percentage of sunshine by judging what percent time the sun is not covered by clouds that are thick enough to produce a shadow. (100 percent sunshine = no cloud cover and a sharp, distinct shadow 0 percent sunshine = no shadows).

[c]A normal work ensemble consists of cotton coveralls or other cotton clothing with long sleeves and pants.

STANDARD OPERATING PROCEDURE 6.17

MEASUREMENT OF RADON-DAUGHTER CONCENTRATIONS IN AIR

1. PURPOSE

To describe the methods used to collect samples of filtered particulates in the air and the subsequent quantitative analyses of these samples to determine radon-222 daughter concentrations.

2. DISCUSSION

The Remedial Investigation Plan (RIP) provides information on the scope of a given operation, related health and safety requirements, and the applicability of this procedure to the activities.

These procedures will be used to determine the radon-daughter concentration in the air over a short period of time under normal work or environmental conditions. Decisions about the protection of personnel can then be based on these short-term measurements.

The measurement of radon-daughter concentrations on air particulates (working level) will be made periodically in poorly ventilated work areas. Poor indoor ventilation conditions may result in an accumulation of radon and radon daughters, so there is a need for periodic radon-daughter grab samples.

3. PROCEDURE

3.1. Associated Procedures

Information that applies to most field activities is provided in SOPs 1.1-1.10. In addition to the RIP, those SOPs provide guidance that may supplement the information in this procedure. They should be consulted as necessary to obtain specific information about equipment and supplies; sample collection, preservation, packaging, and shipping; decontamination procedures; and documentation requirements. Procedures directly associated with this SOP are listed below.

SOP No.	SOP Title
1.1	General Instructions for Field Personnel
1.6	General Equipment Decontamination

3.2. Preparation

3.2.1. Office

A. Review the RIP and SOPs listed in Section 3.1.

B. Coordinate schedules/actions with the installation staff.

C. Obtain appropriate permission for property access.

D. Assemble the equipment and supplies listed in Appendix 5.1. Ensure the proper operation of all field equipment.

3.2.2. **Documentation**

A. Obtain a logbook from the QA officer.

B. Record results of the equipment check in the logbook.

C. Obtain a sufficient number of the appropriate ER Program data collection forms (see INDEX TO SOPs).

D. Consult the ER Program data administrator for a current list of information codes and location IDs used in the completion of data forms.

3.2.3. **Field**

[illegible]

H. Set the Ra/Am switch to the Am position.

I. Set the power toggle switch to internal to operate on battery power. Before it can be moved to either power position, the switch must be pulled slightly away from the console.

J. Push the start button to begin counting. Note the start time on the Radon-Daughter Concentration Data form.

K. At the end of the 5-min counting sequence, push the display button and note the counts displayed on the LED register. Enter the cpm on the Radon-Daughter Concentration Data form.

L. Turn off the power toggle switch.

M. Remove the scintillator tray from the counting chamber. The black cell cap should be returned to the scintillator tray.

N. Replace the flat cap and cap retaining ring.

3.4. **Postoperation**

3.4.1. **Field**

A. Turn all instrument switches to the off position.

B. Determine the working level value using the formulas and tables at the bottom of the Radon-Daughter Concentration Data form. If higher than expected results are calculated, it may be necessary to count several filters from the batch for an extended period of time to determine if the filters are contaminated.

C. Ensure that all equipment is accounted for, decontaminated (see SOP 1.6, General Equipment Decontamination), and ready for shipment.

D. If necessary, make sure all survey or sampling locations are properly staked

C. Ensure that all radiological sources have been stored in a locked area.

4. SOURCES

EPA. 1986a. "Interim Indoor Radon and Radon Decay Product Measurement Protocols." U.S. Environmental Protection Agency report EPA 520/1-86-04, April 1986. Washington, D.C.: U.S. Government Printing Office.

EPA. 1986. "Implementation Strategy for the Radon/Radon Progeny Measurement Proficiency Evaluation and Quality Assurance Program." U.S. Environmental Protection Agency report EPA 520/1-86-03, February 1986. Washington, D.C.: U.S. Government Printing Office.

5. APPENDIXES

5.1. Equipment and Supplies Checklist

5.2. Tray Background and Efficiency Log Form

5.3. Radon-Daughter Concentration Data Form

5.4. Data Form Completion

APPENDIX 5.1

EQUIPMENT AND SUPPLIES CHECKLIST

_____ EDA/RDA 200 analyzer

_____ Alpha check source (25-mm, Am-241)

_____ Tygon tubing

_____ 25-mm membrane or glass-fiber filters

_____ Filter-holder assembly with in-line adaptor and open-face adaptor

_____ Air sampler with rotometer (2 to 10 *l*pm capacity)

_____ Gillibrator or mini buck air sampler calibrator

_____ Stopwatch

_____ EDA scintillator trays

_____ Hand-held calculator

_____ Tweezers

APPENDIX 5.2

TRAY BACKGROUND AND EFFICIENCY LOG FORM

TRAY BACKGROUND AND EFFICIENCY LOG

PAGE 1 OF _____

FACILITY CODE _____ EDA/RDA 200 SERIAL NO _____

CALIBRATION DATE _____ **ACCEPTANCE CODE** _____

TRAY ID _____

CHECK SOURCE:

ISOTOPE _____ ACTIVITY _____ DPM SERIAL NO _____

SOURCE CHECK:

METER READING _____ COUNTS/_____ MIN = _____ CPM

$$\text{EFFICIENCY} = \frac{\text{SOURCE CPM}}{\text{SOURCE DPM}} = \_\_\_\_\_ \text{ CPM/DPM}$$

COMMENTS _____

LOG DATE	**LOGGER CODE**	FIELD REP	TOTAL COUNT TIME (MIN)	BACKGROUND	
				COUNTS	COUNT RATE (CPM)

ACCEPTANCE CODES: A–ACCEPTABLE R–RECONNAISSANCE U–UNACCEPTABLE N–NOT DETERMINED

COMPLETE BOLDED DATA FOR ENTRY INTO TIMS

FBL-114 (3/88)

_____ FORM COMPLETED BY/DATE

_____ TECHNICAL REVIEWER/DATE

APPENDIX 5.2, Continued

TRAY BACKGROUND AND EFFICIENCY LOG

PAGE ____ OF ____

FACILITY CODE ______________________ TRAY ID ______________________

LOG DATE	LOGGER CODE	FIELD REP	TOTAL COUNT TIME (MIN)	BACKGROUND	
				COUNTS	COUNT RATE (CPM)

COMPLETE BOLDED DATA FOR ENTRY INTO TIMS
FLD-FBL-114 (3/88)

APPENDIX 5.3

RADON-DAUGHTER CONCENTRATION DATA FORM

RADON–DAUGHTER CONCENTRATION DATA

FACILITY CODE _____ LOG DATE _____ ACCEPTANCE CODE _____

LOGGER CODE _____ FIELD REP _____

LOCATION ID	COORDINATES (FT)		COLLECTION						ANALYSIS									
			TIME		TOTAL TIME (MIN)	FLOW RATE (LPM)		TOTAL VOLUME (LITER)	COUNT START TIME	SAMPLE		BACKGROUND		NET COUNT RATE	EFF CPM/DPM	TAS	TABLE FACTOR	WORKING LEVEL
	NORTH	EAST	START	STOP		START	STOP			GROSS COUNT C_{S+B}	COUNT TIME T_{S+B}	GROSS COUNT	COUNT TIME					

ACCEPTANCE CODES: A–ACCEPTABLE R–RECONNAISSANCE U–UNACCEPTABLE N–NOT DETERMINED

KUSNETZ TABLE FACTORS

DELAY TIME (MIN.)	FACTOR	DELAY TIME (MIN.)	FACTOR
40	148	70	88
42	144	72	86
44	140	74	83
46	136	76	80
48	132	78	76
50	128	80	73
52	124	82	70
54	120	84	67
56	116	86	64
58	112	88	62
60	108	90	60
62	104		
64	100		
66	96		
68	92		

$$\text{W.L.} \pm 2\sigma = \frac{\left(\frac{C_{S+B}}{T_{S+B}} - \frac{C_B}{T_B}\right)}{K} \pm 2\sigma$$

$$2\sigma = 2\frac{\sqrt{\frac{C_{S+B}}{T^2_{S+B}} + \frac{C_B}{T^2_B}}}{K}$$

WHERE:

K = (EFF.) (VOL.) (TABLE FACTOR)

C_{S+B} = COUNTS, SAMPLE + BACKGROUND

T_{S+B} = TIME, SAMPLE + BACKGROUND

C_B = COUNTS, BACKGROUND T_B = TIME, BACKGROUND

1. AIR SAMPLE COLLECTION: EXACTLY 10 MINUTES THROUGH A 25mm DIAMETER FILTER AT A FLOW RATE OF 2 LPM.
2. ANALYSIS: MINIMUM OF 40 MINUTES AFTER COLLECTION. COUNT FOR 10 MINUTES.

CHECK SOURCE READING _____

SOURCE SERIAL NO. _____

SOURCE ISOTOPE _____

SOURCE ACTIVITY _____

INSTRUMENT SERIAL NO _____

PUMP ID NO. _____

CALIBRATION DATE _____

CALIBRATION CORR _____

COMPLETE BOLDED DATA FOR ENTRY INTO TIMS

RDC–123 (3/88)

_____ FORM COMPLETED BY/DATE

_____ TECHNICAL REVIEWER/DATE

APPENDIX 5.4

DATA FORM COMPLETION

Use a pen with black ink that is not water soluble (not a felt-tip pen). Make an entry in each blank. Where there is no data entry, enter UNK for Unknown, NA for Not Applicable, or ND for Not Done. If any procedure was not performed as prescribed, give the reason for the change or omission on the form. To change an entry, draw a single line through it, add the correct information above it, and initial the change.

TRAY BACKGROUND AND EFFICIENCY LOG FORM

1. Facility Code. Five-character code abbreviating the facility name where program activity is being conducted. The first three characters indicate the facility, and the remaining two numbers designate the specific site within the facility.

2. EDA/RDA 200 Serial No. The serial number of the analyzer being used.

3. Calibration Date. The date when the EDA/RDA 200 analyzer was last calibrated.

4. Acceptance Code. One-character code assigned by the site manager.

5. Tray ID. The unique identification number or letter on the tray.

6. Check Source Isotope. The radioactive isotope contained in the check source given as an element and mass number, like Am-241.

7. Check Source Activity. The activity of the radioactive check source in disintegrations per minute (dpm). An activity given in microcuries (μCi) can be converted to dpm using $1 \mu Ci = 2.2 \times 10^6$ dpm.

8. Check Source Serial No. The serial number of the radiation check source.

9. Source Check Meter Reading. The results of a count on the check source. Check source data consists of three fields: total counts, count time in minutes, and count rate in counts per minute (cpm).

10. Efficiency. The ratio of the observed count rate (cpm) to the true disintegration rate (dpm) of the source.

    Efficiency = cpm/dpm

11. Comments. Any additional information.

12. Log Date. The date that information recorded on the form was obtained in the format DD-MMM-YY (01-JAN-88).

13. Logger Code. Three-character or four-character code identifying the company responsible for collecting the information recorded on the form.

14. Field Rep. The name of the field representative.

15. Total Count Time (Min). The length of time (in minutes) that the tray is counted in the EDA/RDA 200 analyzer.

16. Background Counts. The total counts collected during the counting period.

17. Background Count Rate (CPM). The number of counts per minute with a blank filter in the scintillation tray.

APPENDIX 5.4

DATA FORM COMPLETION

RADON-DAUGHTER CONCENTRATION DATA FORM

1. Facility Code. Five-character code abbreviating the facility name where program activity is being conducted. The first three characters indicate the facility, and the remaining two numbers designate the specific site within the facility.

2. Log Date. The date that information recorded on the form was obtained in the format DD-MMM-YY (01-JAN-88).

3. Acceptance Code. One-character code assigned by the site manager.

4. Logger Code. Three-character or four-character code identifying the company responsible for collecting the information recorded on the form.

5. Field Rep. The name of the field representative.

6. Location ID. Four-character code assigned sequentially to each borehole, test pit, or surface location where physical, chemical, biological, radiological, and other measurements are taken.

7. Coordinates (Ft). The coordinates of the measurement location in feet. The format is north and east.

8. Collection Time. The time that air sampler operation began (start) and the time that sampling was completed (stop) in the 24-hr clock format (HH:MM).

9. Collection Total Time (Min). The total time that the scintillation cell was collecting the sample (that is, stop time minus start time) in minutes.

10. Collection Flow Rate (LPM). The flow rate of air through the rotometer as measured in liters per minute (*l*pm). Flow rate should be recorded at the beginning (start) and end (stop) of the pumping period.

11. Collection Total Volume (Liter). The total volume of air sampled, determined by multiplying the average flow rate by the total time.

12. Analysis Count Start Time. The time that scintillation cell counting began in the 24-hr clock format (HH:MM).

13. Analysis Sample Gross Count. Total counts measured for the filter and tray for the total count time.

14. Analysis Sample Count Time. Total time (in minutes) that the filter (including the tray) is counted.

15. Analysis Background Gross Count. Counts for the empty tray (from the Tray Background and Efficiency Log form).

16. Analysis Background Count Time. The total time (in minutes) that the tray was counted.

17. Analysis Net Count Rate. Sample gross count rate minus background count rate.

18. Analysis EFF CPM/DPM. The scintillation tray efficiency recorded on the Tray Background and Efficiency Log form.

19. Analysis TAS. An abbreviation representing time after sampling--the total time elapsed (in minutes) from the stop time that the sample was collected to the midpoint of the counting period.

20. Analysis Table Factor. A factor determined from the Modified Kusnetz Method and taken from the table at the bottom left of the form. The delay time is equal to TAS.

21. Analysis Working Level. The working level (WL) is calculated by entering the correct variables into the equation on the Radon-Daughter Concentration Data form.

22. Check Source Reading. The result of the check source count in counts per minute.

23. Source Serial No. The serial number of the radiation check source.

24. Source Isotope. The radioactive isotope contained in the check source given as an element and mass number, like Am-241.

25. Source Activity. The activity of the radioactive check source in disintegrations per minute.

26. Instrument Serial No. The identification number of the EDA/RDA 200 analyzer.

27. Pump ID No. The identification number on the pump used for collecting the sample.

28. Calibration Date. The date the pump was last calibrated.

29. Calibration Corr. The correction factor from the calibration of the pump that converts the rotometer reading to liters per minute.