General 7/1/90

Health Physics Vol. 58, No. 3 (March), pp. 275–281, 1990
Printed in the U.S.A.

0017-9078/90 $3.00 + .00
© 1990 Health Physics Society
Pergamon Press plc

● *Paper*

PERFORMANCE EVALUATION OF CONTINUOUS AIR MONITOR (CAM) SAMPLING HEADS

Andrew R. McFarland,* Carlos A. Ortiz* and John C. Rodgers†
*Aerosol Technology Laboratory, Department of Mechanical Engineering, Texas A&M University, College Station, TX 77843 and †Health Safety and Environment Division, Los Alamos National Laboratory, Los Alamos, NM 87545

(*Received* 28 *March* 1989; *accepted* 30 *October* 1989)

***Abstract*—Continuous air monitor (CAM) samplers are used to detect radioactive aerosol particles in nuclear facilities and to provide alarm signals should the concentrations exceed a multiple of the derived air concentration (DAC) of the radionuclide of concern in a set amount of time. Aerosol particles are drawn into a CAM sampler where collection is to take place upon a filter. Radioactivity of the particles is determined with a detector that is placed in close proximity to the filter face. An important determinant of CAM performance is the ability of the inlet and body of the CAM to transport particulate matter in the inhalable-size range (≤10 μm aerodynamic diameter) to the filter without substantial loss or bias with respect to particulate size. Three types of CAM samplers were tested in a low-velocity aerosol wind tunnel to determine the degree to which particles penetrate through the flow systems to the collection filter under conditions typical of normal room air exchange rates. Two air velocities were used: 0.3 and 1.0 m s^{-1}. The CAM samplers were primarily operated at a flow rate of 56.6 L min^{-1}, although some tests were conducted at a flow rate of 28.3 L min^{-1}. The CAM units were prototypes manufactured by Kurz Instruments, Eberline Instrument Corporation, and Victoreen Inc.‡ These three units represent three different approaches to CAM head design. At an air speed of 1 m s^{-1}, aerosol penetration to the filters of the Kurz unit was essentially 100% for particle sizes of 3 and 7-μm aerodynamic diameter and was 86% for a size of 15 μm. For the Eberline sampler, the penetration was over 80% for 3-μm particles but was reduced to less than 2% for 7-μm particles. The Victoreen sampler showed penetration values of 98% for 3-μm aerodynamic diameter particles, 88% for 7-μm particles and 4% for a size of 15 μm. Air speed had little effect on the penetration results for the two speeds which were tested. Tests were conducted to determine the uniformity of deposits on the filters of the CAM samplers. For a particle size of 10 μm, the deposits were nonuniform for all three of the instruments.**

INTRODUCTION

CONTINUOUS air monitor (CAM) samplers are extensively used for sampling potentially radioactive aerosols from indoor environments and flow ducts. Basically, the units consist of a closely spaced aerosol filter and radiation detector.

Sampled air is drawn into the gap between the filter and detector and then passed through the filter where the aerosol particles are collected. The radioactivity associated with the collected particulate matter is monitored with the detector. If an anomalously high level of activity is present, the CAM sampler output will trigger an alarm and can actuate safety devices if desired.

There has been little work to characterize the sampling performance of CAM samplers. Biermann and Velen (1984) tested the Eberline Alpha-3 CAM sampler at a flow rate of 11 L min^{-1} with 6-μm-diameter aerosol particles and found that only 46% of the aerosol penetrated the sampler to the filter. In conjunction with the performance assessment of the Pu CAM systems at the Waste Isolation Pilot Plant (WIPP) in Carlsbad, NM, Rodgers and Kenney (1988) studied the internal fractionation characteristics of the Nuclear Research Corporation (NRCo) CAM samplers which had been procured by the U.S. DOE. Their estimates suggested that impaction losses could cause the sampling cutpoint to be approximately 1-μm aerodynamic diameter at a flow rate of 56.6 L min^{-1}. The sampling cutpoint is the particle size for which 50% of the aerosol that enters the sampler is transmitted to the filter (and 50% is inadvertently lost on internal surfaces). McFarland et al. (1989) tested the NRCo

‡ The mention of commercial instrumentation does not imply warranty of the suitability, or lack thereof, of this equipment for any particular application. The observed performance of these prototype heads may or may not be representative of production units currently available from these vendors. Addresses for these manufacturers are: Kurz Instruments—2411 Garden Road, Monterey, CA 93940; Eberline Instrument Corp.—P.O. Box 2108, Santa Fe, NM 87504-2108; Victoreen Inc.—6000 Cochran Road, Cleveland, OH 44139-3395.

12274

WIPP-site CAM samplers with 10-μm aerodynamic diameter aerosol particles and observed that the wall losses were 76% at a flow rate of 56.6 L min^{-1}. Internal modifications to the WIPP-site CAM samplers were subsequently made by McFarland et al. to improve aerosol penetration to the filter.

In addition to the wall losses, there is also concern about the uniformity of deposits on the filter. For example, if the aerosol is primarily deposited at the outer edge of the filter, the detector would underestimate the amount of radioactivity compared with uniform deposition. Biermann and Velen (1984) noted that the deposition of aerosol on the Eberline Alpha-3 was nonhomogeneous, although some of the effects of nonhomogeneity were canceled out by detector integration. They estimated that 32% of the 6-μm particles collected on a filter would be detected. For the modified NRCo samplers, the range of surface density values of 7 sub-samples taken from filters which had been used to collect 10-μm aerosol was 0.95 to 1.08 that of the mean surface density (McFarland et al. 1989), which shows that uniform deposition is achievable with proper design.

The study reported herein consisted of testing the aerosol sampling characteristics of three different types of CAM samplers, which were represented in the study by prototypes fabricated by Kurz Instruments (Kurz Alpha), Victoreen Inc. (Victoreen Alpha), and Eberline Instrument Corporation (Eberline Alpha-6). A comparison of selected parameters of the three units is given in Table 1. These three CAM heads represent three approaches to the problem of designing a CAM head which should extract a suitable sample of aerosol from the workplace environment and deliver it to the filter without substantial loss or bias with respect to particle size, yet still permit the close placement of an alpha detector over the face of the filter to continuously monitor alpha emissions. The three strategies (designated Type A, B, and C) for CAM inlet design represented in these prototypes are shown in Fig. 1. Similar approaches can be found in other CAM systems. For example, the original NRCo CAM has an inlet of Type C although the Texas A&M modification resulted in a system which approximates the Type A design. A CAM head of Type A design has been under development at the Rocky Flats Plant (Tyree and Balmer 1987).

A major objective of the study reported herein was to develop experimental data which would support a determination of aerosol sampling performance of these several types of CAM designs. Previous studies of the NRCo CAM (Rodgers and Kenney 1988) which were based primarily on impactor theory (Newton et al. 1977) were only partially successful in predicting critical sampling characteristics, indicating the need for direct empirical performance assessment. The principal characteristic of interest in describing the performance of a sampler is the penetration curve, i.e., a curve showing the fraction of aerosol which reaches the filter as a function of particle size. In this study, we determined these curves for the three sampler designs. The uniformity of deposits of 10-μm aerodynamic diameter aerosols was also tested for each of the designs.

With respect to our choice of test aerosol sizes, we selected a range that would be appropriate to that which has been observed in experiments by Elder et al. (1974), who employed cascade impactors to collect samples of Pu aerosols in research and development facilities and in a fabrication area. They noted that approximately 70% of the particles were in the size range of 1 to 10 μm aerodynamic diameter and that approximately 7% of the particles had sizes $\geq$10 μm AED. We believe that cascade impactors tend to underestimate the concentration of particles with sizes $\geq$ 10 μm AED due to inefficient entrainment of the aerosol in the acceleration jets and due to solid particle carryover problems.

EXPERIMENTAL PROCEDURE

The aerosol testing of the CAM samplers was performed in a wind tunnel with a 600 mm $\times$ 600 mm test section (Fig. 2). We have used this tunnel extensively in conjunction with aerosol sampling studies. Examples of its use are given by Ortiz and McFarland (1985) and McFarland et al. (1987). With reference to Fig. 2, the approach which was used to determine the penetration of aerosol to the filter of a CAM sampler involved generating a monodisperse aerosol with a vibrating jet atomizer (Berglund and Liu 1973) and introducing the aerosol into the entrance of the wind tunnel. In order to develop a uniform aerosol concentration profile at the

Table 1. Comparison of CAM sampler parameters.

	SAMPLER		
	Type A KURZ	Type B VICTOREEN	Type C EBERLINE
Filter-Detector Gap	3.9 mm	3.5 mm	6.4 mm
Filter size	54 mm	51 mm	25 mm
Filter pressure drop, glass fiber media, flow rate = 57 L min^{-1}	38 mm Hg	64 mm Hg	290 mm Hg

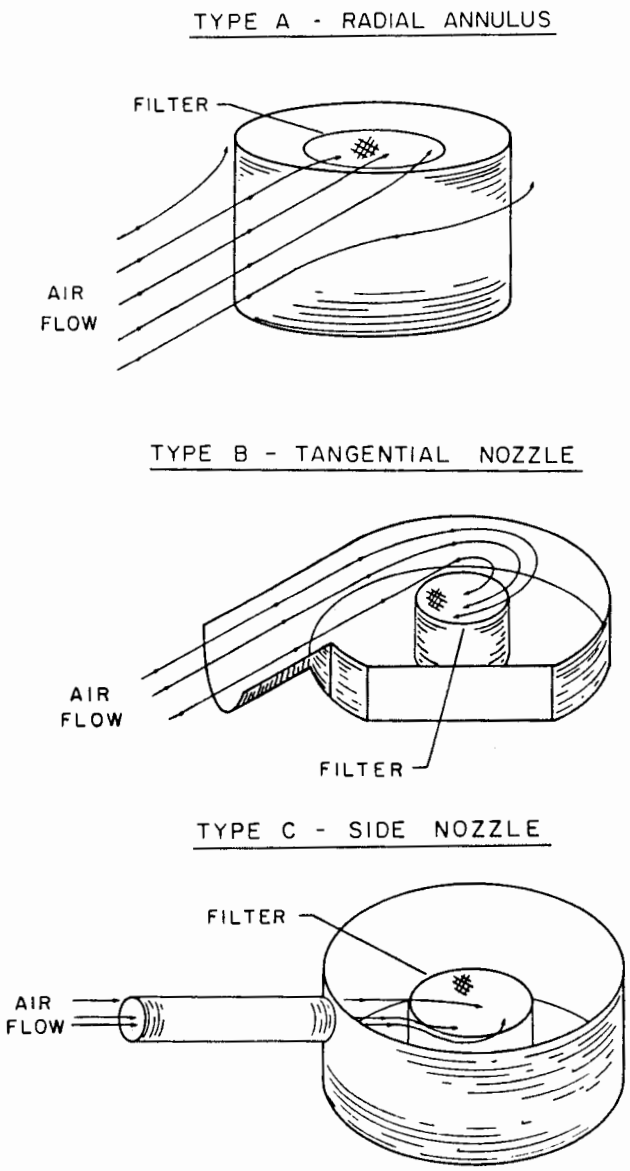

Fig. 1. Illustrations of the three types of CAM samplers that were tested. The cover and detector are removed from the sampling head in order to show the air flow patterns to the filters. A non-directional inlet was located upstream of the inlet tube of the Type C sampling head.

wind tunnel test section, the aerosol was mixed through use of a barrier at the tunnel entrance. The barrier creates large-scale turbulence which, in turn, is reduced in scale by a grid placed across the tunnel cross section. The aerosol then flows into the test section where the CAM sampler and an isokinetic sampler are located. The isokinetic sampler is used to establish the actual concentration level in the tunnel.

The aerosol was formed by atomizing a solution of sodium fluorescein and oleic acid dissolved in ethanol. Upon evaporation of the ethanol, the residual aerosol particles are droplets of oleic acid tagged with the analytical tracer, sodium fluorescein, in a ratio of 10 parts oleic acid (volume) to one part sodium fluorescein (mass). Residual droplets were sized microscopically using the factor of Olan-Figueroa et al. (1982) to correct for gravitational flattening of the oil droplets on oil-phobic glass slides. For assurance that the aerosol particle size remained constant, samples were taken for microscopic analysis at the start and completion of each test.

During testing, the isokinetic probe and a CAM sampler were simultaneously operated in the tunnel for a period of time sufficient to collect an easily detectable quantity of fluorescein on the after-filter of the isokinetic probe. The test time varied from 4 to 15 min for penetration tests and 15 to 45 min for uniformity tests, depending on particle size and wind speed. At the completion of a test, the filter of the CAM sampler and the isokinetic probe and its after-filter were taken to an analysis laboratory where the sodium fluorescein was eluted from the filters and washed from the internal walls of the isokinetic probe. The mass of sodium fluorescein was quantified fluorimetrically using a Sequoia-Turner Model 450 Fluorometer.[§] Penetration of aerosol to the CAM filter, P, was calculated from

$$P = \frac{C_{\text{cam}}}{C_{\text{iso}}} \tag{1}$$

where C_{cam} = aerosol concentration in the wind tunnel calculated from the mass of fluorescein collected on the CAM filter; and C_{iso} = aerosol concentration in the wind tunnel calculated from the mass of fluorescein collected on the filter and internal walls of the isokinetic sampler.

To determine the uniformity of aerosol deposits on the CAM filters, the CAM samplers were operated in the wind tunnel to collect sufficient deposits of particulate matter to permit reliable analysis. Replicate (duplicate or triplicate) tests were conducted with each sampler operated at an air speed of 1.0 m s^{-1} and with 10-μm aerodynamic diameter aerosol particles. For the Kurz and Victoreen samplers, seven subsamples of 9-mm diameter were randomly punched from each filter and the mass of sodium fluorescein on each subsample and the remainder of the filter matrix was analyzed. For the Eberline sampler, the diameter of that part of the filter which is exposed to aerosol is only 22 mm, and it was not possible to reliably characterize aerosol mass on seven randomly spaced small-diameter subsamples. Instead, a single subsample was punched from the center of the filter and its areal density compared with that on the remainder of the filter.

RESULTS

The experimentally observed penetration values for the various CAM sampler designs, operated at 56.6 L min^{-1} in an air stream at a speed of 1 m s^{-1}, are shown

[§] Sequoia-Turner Corporation, Mountain View, CA 94043.

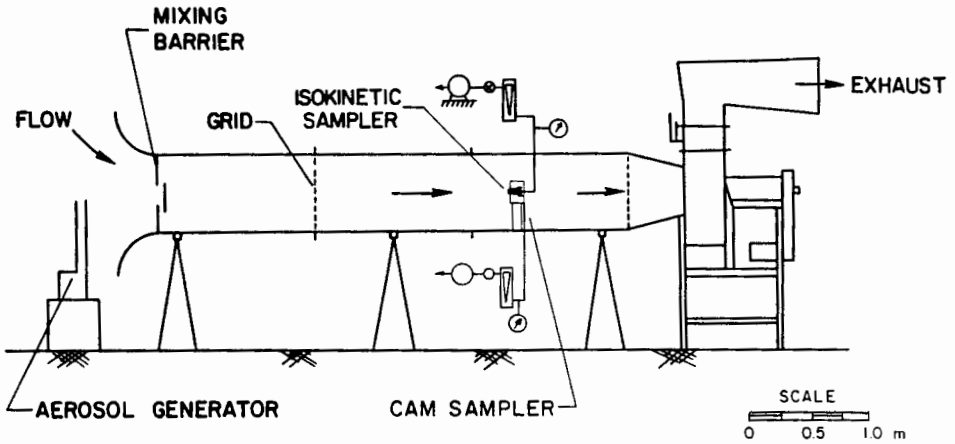

Fig. 2. Wind tunnel setup used for testing CAM samplers. The CAM sampler and isokinetic probe were operated simultaneously.

in Fig. 3. The error bars represent ±1 standard deviation from the mean value.

The penetration of 3- and 7-μm-diameter aerosol particles through the Type A (Kurz) sampler is essentially quantitative (i.e., ≃100%). For 15-μm particles, the penetration was 86%. Similar results were obtained at an air speed of 0.3 m s^{-1} (Table 2). At the lower air speed, the penetration was noted to be 97% for 7-μm particles and 82% for 15-μm particles. The filter deposition patterns showed the areal densities of 10-μm particles to range from 65% to 125% that of the mean areal density. The standard deviation of the deposits was 18% of the mean deposit. Visual observation of the deposits showed essentially no particles deposited in the outer 1.5 mm of the open area of the filter.

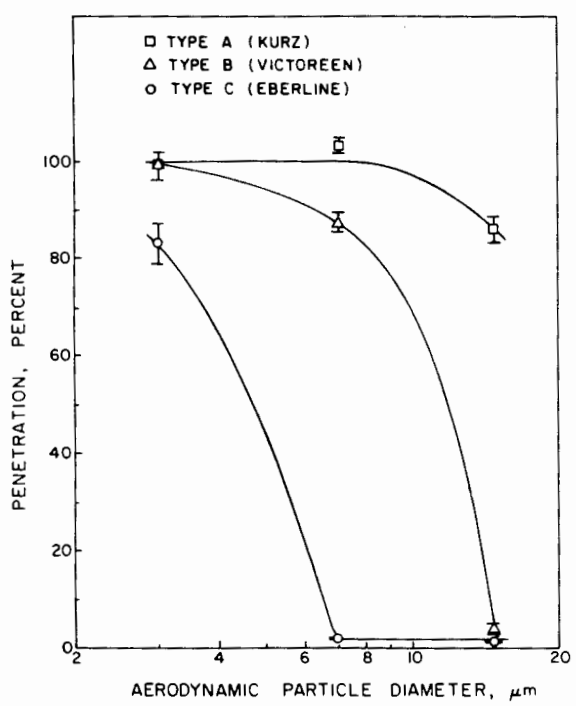

Fig. 3. Penetration of aerosol particles through CAM sampler types. Units were operated at a flow rate of 56.6 L min^{-1} in an air speed of 1.0 m s^{-1}.

The Type B (Victoreen) sampler showed essentially 100% penetration for 3-μm particles and an estimated cutpoint of 12-μm aerodynamic diameter (Fig. 3). When tested at an air speed of 0.3 m s^{-1}, the sampler showed approximately the same values as at the 1.0-m s^{-1} air speed (Table 2). The Type B sampler was also tested at an azimuthal angle of 90° relative to the air velocity vector since this type of sampler has a directional inlet whereas Type A and C designs do not. As may be noted from Table 2, for a particle size of 7 μm the penetration was approximately the same for angles of 0° and 90° at air speeds of either 0.3 or 1.0 m s^{-1}. Due to the directional characteristic of this design, it is to be anticipated that anisokinetic effects would be manifest at higher air speeds and larger particle diameters, but this was not tested in the present study. Qualitatively, the filter deposits were noted to be nonuniform, with more material deposited on the outer edge of the filter as compared with the center. The range of areal densities of the subsamples was 42% to 166% of the mean value and the standard deviation was 39% that of the mean. Aerosol deposits were observed on the ring which is used to hold the filter in place. The gap between the filter and detector is much smaller for the Type B design (Victoreen sampler) than for the other two types which were tested (Table 1). The small gap may explain the high losses on the filter holding ring.

At an air speed of 1 m s^{-1}, the nondirectional inlet and filter-detector assembly of the Type C (Eberline Alpha-6) unit showed a penetration of 83% for 3-μm particles (Fig. 3). However, the penetration was less than 2% for 7- and 15-μm aerosol particles. When the entire instrument was placed in the wind tunnel and tested with 3-μm particles, the penetration was 74% at an air speed

Table 2. Aerosol penetration through CAM sampler heads.

		Aerodynamic Diameter				
		D_a=3.0 μm	D_a=7.0 μm		D_a=14.8 μm	
		Air Speed				
SAMPLER	FLOW RATE	1 m s^{-1}	1 m s^{-1}	0.3 m s^{-1}	1 m s^{-1}	0.3 m s^{-1}
KURZ	56.6 L min^{-1}	97.7%±2.9%	103.4%±1.2%	97.3%±2.8%	85.7%±2.7%	81.5%±2.5%
VICTOREEN						
·As-Received						
0°,Facing Flow	~25 L min^{-1}	37.5%±5%	44.0%±1.2%	44.0%±0.9%	21.8%±1.8%	20.2%±1.5%
90°, to Flow	--	--			15.2%±0.7%	17.7%±1.5%
·Leak free						
0°,Facing Flow	56.6 L min^{-1}	98.0%±3.2%	87.3%±1.9%	93.5%±0.9%	3.8%±0.7%	--
90°, to Flow	--	--	81.1%±3.2%	93.2%±3.8%	--	--
EBERLINE						
·Inlet and Detector-Filter Assembly	56.6 L min^{-1}	83.0%±4.4%	1.8%±.2%	1.2%±.1%	1.0%±.1%	--
·Inlet	56.6 L min^{-1}	88.5%±	73.6%±2.6%	67.1%±1.1%	48.1%±3.4%	54.4%±1.5%
·Full System	56.6 L min^{-1}	73.5%±3.2%				
	28.3 L min^{-1}	92.3%±2.3%				

of 1 m s^{-1} (Table 2) as compared with the value of 83% observed in tests with only the inlet and filter-detector assembly located in the wind tunnel. It may also be noted from Table 2 that reducing the flow rate from 56.6 L min^{-1} to 28.3 L min^{-1} caused an increase in penetration of 3-μm particles from 73.5% to 92.3% when the entire instrument was located in the wind tunnel. The inlet of the Type C (Eberline) sampler was tested separately and the results showed the aerosol penetration through the inlet to be considerably greater than that through the combined inlet and filter-detector (Fig. 4). This suggests that the losses are internal to the filter-detector unit. A test was conducted to recover particle mass which had been deposited by impaction in the region where the inlet tube enters the filter housing . Results showed that approximately 38% of 15-μm aerosol particles were inadvertently deposited at that location.

The uniformity tests with the Type C (Eberline) unit showed 12% more aerosol deposited in the center part than in the outer portion of the filter. However, the uniformity data are not particularly meaningful since <2% of the 10-μm particles reach the filter.

DISCUSSION

In general terms, an alpha CAM sampler should be capable of providing a rapid alarm in the presence of concentrations of radioactive particulates which exceed the derived air concentration (DAC) of the most restrictive radionuclide present. DOE guidance (Mishima et al. 1988; Kathren and Selby 1980) states that CAM samplers be capable of detecting one DAC when averaged over 8 h (8 DAC h) in the presence of the expected range of concentrations of interfering background radionuclides such as Rn progeny which may vary from a few Bq m^{-3} to several hundred Bq m^{-3}. While the sampler need not produce a representative sample (i.e., one in which masses of each particle size are neither over-sampled or under-sampled), it should have the widest possible range of particle size response. At a minimum, the instrument should be capable of meeting the performance objective over the full range of particles which can present a challenge to the human respiratory system. The actual aerosol size distribution associated with an accidental release cannot be predicted because of the uncertain nature of the particle formation process (explosion, fire, etc.). However, the particle size distribution of Pu aerosols tends toward large aerodynamic equivalent diameters (AED), due to the very high density of the element.

Particles which by virtue of their AED's are expected to penetrate the head airways and enter the lung airways during mouth breathing are described (ACGIH 1985) as the thoracic particulate mass fraction (TPMF). The TPMF therefore represents the worst case potential exposure of the whole lungs to particulates, and thus provides the most unambiguous distribution pattern for per-

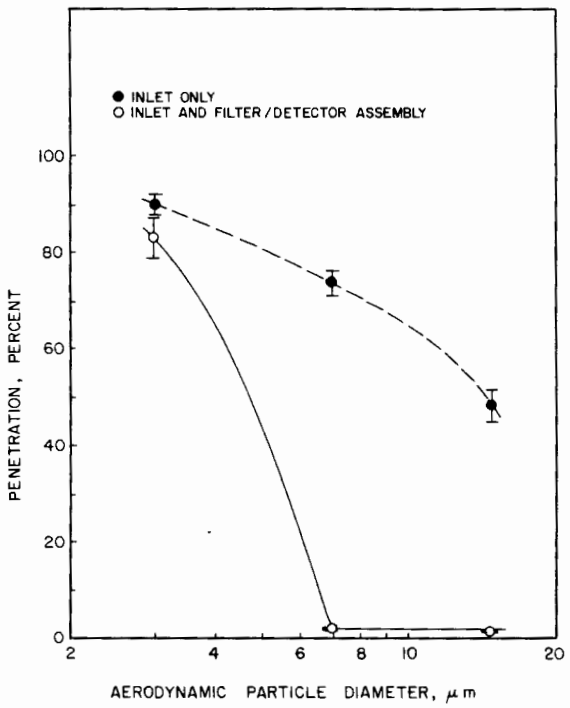

Fig. 4. Comparison of aerosol penetration through the inlet and the complete aerosol transport system of the Type C (Eberline) unit. Flow rate = 56.6 L min^{-1} and air speed = 1.0 m s^{-1}.

formance assessment. The TPMF is characterized (ACGIH 1985) by a lognormal size distribution with a median cut size of 10 ± 1 μm and a geometric standard deviation of 1.5 ± 0.1. The American Conference of Governmental Industrial Hygienists Technical Committee on Air Sampling Procedures (ACGIH 1985) recommends the TPMF as a conservative, but not an overly conservative, basis for evaluating the performance of air sampling instruments.

The U.S. EPA (1987) has adopted a standard for ambient air sampling apparatus which states that a device should fractionate the size distribution with a cutpoint of 10-μm aerodynamic diameter in order to mimic the collection of aerosol particles in the whole lung of the human respiratory system during mouth breathing.

We believe that CAM samplers should, therefore, as a minimum, permit the penetration to the filter and detector of at least 50% of aerosol particles with 10-μm aerodynamic equivalent diameter without size-selective bias.

The testing of the CAM samplers reported herein, together with that reported previously (Bierman and Velen 1984; McFarland et al. 1989), shows deficiencies in the aerosol sampling aspects of these work-protection devices. Some of these deficiencies can be relatively easily remedied; for example, in earlier work with the NRCo sampler, the modifications to the flow system design improved the penetration of 10-μm aerosol particles from 24% to 86% (McFarland et al. 1989). Of the three types of CAM samplers tested, Type A (Kurz) and Type B (Victoreen) both had cutpoints >10-μm aerodynamic diameter; however, neither of these had uniform filter deposits and as a consequence the instrument response characteristics could be particle-size sensitive. The standard deviation of the areal density of particle deposits for seven random subsamples punched from the Type A (Kurz) filters was 23% of the mean areal density while that of the Type B (Victoreen) filters was 122%. By comparison, the standard deviation was 5% for the filters of the redesigned WIPP-site NRCo CAM sampler (Type A). Also, the design of the Type A (Kurz) sampler is such that the nonuniformity of deposition patterns should be more pronounced at air speeds higher than those reported in this investigation.

The data generated in this study show certain performance deficiencies in all of the types of CAM samplers studied, so these results should be of immediate importance to individuals involved in the design of CAM samplers, the field use of the devices, the analysis of data gathered with the samplers, and in enforcement of nuclear safety regulations. Hopefully these results will contribute to establishing motivation for developing CAM samplers for which aerosol transport and filter uniformity aspects are optimized.

Acknowledgments—Funding for this research was provided by Los Alamos National Laboratory under Purchase Order No. 5-LF8-1688V-1.

REFERENCES

American Conference of Governmental Industrial Hygienists. Particle size-selective sampling in the workplace. A report of the ACGIH Technical Committee on Air Sampling Procedures. Cincinnati, OH: American Conference of Governmental Industrial Hygienists; 1985.

Berglund, R. N.; Liu, B. Y. H. Generation of monodisperse aerosol standards. Environ. Sci. Technol. 7:147–153; 1973.

Biermann, A.; Velen, S. CAM particle deposition evaluation. In: Griffith, R. V., ed. Hazards Control Department Annual Technology Review. Livermore, CA: Lawrence Livermore National Laboratory; UCRL-50007-83: 1984.

Elder, J. C.; Gonzales, M.; Ettinger, H. J. Plutonium aerosol size characteristics. Health Phys. 27:45–53; 1974.

Kathren, R. L.; Selby, J. M. A guide to reducing radiation exposures to as low as reasonably achievable (ALARA). Richland, WA: Pacific Northwest Laboratory; DOE/EV/1830-T5; 1980.

McFarland, A. R.; Hickman, P. D.; Parnell, C. B., Jr. A new cotton dust sampler for PM-10 aerosol. Am. Ind. Hyg. Assoc. J. 48:293–297; 1987.

McFarland, A. R.; Anand, N. K.; Ortiz, C. A.; Moore, M. E.; Kim, S. H.; DeOtte, R. E., Jr.; Somasundaram, S. Continuous air sampling for radioactive aerosols. In: First, M. W., ed.

Proceedings of the 20th DOE/NRC Air Cleaning Conference. Boston, MA: Harvard Air Cleaning Laboratory; NUREG/CP-0098, CONF 880882; 1989.

Mishima, J.; Hunt, J.; Kittinger, W. D.; Langer, G.; Ratchford, D.; Ritter, P. D.; Rowan, D.; Stafford, R. D. Health physics manual of good practices for the prompt detection of airborne plutonium in the workplace. Richland, WA: Pacific Northwest Laboratory; PNL-6612; 1988.

Newton, G. J.; Raabe, O. G.; Mokler, B. U. Cascade impactor design and performance. J. Aerosol Sci. 8:339–347; 1977.

Olan-Figueroa, E. O.; McFarland, A. R.; Ortiz, C. A. Flattening coefficients for DOP and oleic acid droplets deposited on treated glass slides. Am. Ind. Hyg. Assoc. J. 43:395–399; 1982.

Ortiz, C. A.; McFarland, A. R. A 10-μm two-stage inlet for sampling indoor aerosols. J. Air Pollut. Contr. Assoc. 35:183–187; 1985.

Rodgers, J. C.; Kenney, J. W. A critical assessment of continuous air monitoring systems at the Waste Isolation Pilot Plant. Santa Fe, NM: Environmental Evaluation Group, Health and Environment Department, State of New Mexico; EEG-38 (DOE/AL/10752-38); 1988.

Tyree, W. H.; Balmer, D. K. The development of a room air monitor system and workplace transuranic aerosol measurement system. In: Kenoyer, J.; Vallario, E.; Murphy, B., eds. Proceedings of the 1985 DOE Workshop on Workplace Aerosol Monitoring, 28–30 Oct. 1985, Napa, CA; Richland, WA: Pacific Northwest Laboratory; Report No. PNL-SA-14255; Feb. 1987.

U.S. Environmental Protection Agency. Ambient air quality standards for particulate matter. 40 CFR Parts 50–53 and 58. Fed. Register 52:24634–24750; 1987.