LANL 93

Section	Title	Rev. No.	Date
i	Foreword		
ii	Statement of Authority	1	02/16/93
iii	Table of Contents	1	02/16/93
iv	Record of Revisions	1	02/16/93
v	Civil Standards Update		
100	General Requirements		
101	Introduction		
102	Reference Documents	1	02/16/93
103	Contract Documents		
104	Preparation of Drawings & Specifications		
105	Environment, Safety, and Health (ES&H)		
106	Physical Security		
200	Civil Engineering Standards		
201	Design Standards		
202	Interdisciplinary Design Review		
203	Design Package Development		
203.1	Project File		
203.2	Design Calculations		
203.3	Computer Aided Design		
203.4	Civil Drawings	1	02/16/93
203.5	Specifications		
204	Geotechnical Investigation		
205	Grading and Drainage Design		
205.1	Site Factors	1	02/16/93
205.2	Hydrological Analyses	1	02/16/93
205.3	Hydraulic Design	1	02/16/93
205.4	Site Demolition	1	02/16/93
205.5	Site Grading	1	02/16/93
205.6	Earthwork	1	02/16/93
205.7	Utility Trenches	1	02/16/93

[redacted]

12386

Section	Title	Rev. No.	Date
205.8	Compaction	1	02/16/93
205.9	Archaeological Clearance	1	02/16/93
205.10	Erosion Control	1	02/16/93
206	**Road, Pavement, and Parking Lot Design**		
206.1	Street Design		
206.2	Road and Associated Drainage System Design		
206.3	Standards and Practices		
206.4	Parking, Paved Storage and Service Areas	1	02/16/93
206.5	Long Range Planning/Siting		
206.6	Classification of Roads		
206.7	Geometric Design Criteria		
206.8	Drainage Considerations		
206.9	Intersection Design		
206.10	Intersection Grading		
206.11	Curb and Gutter		
206.12	Pavement Structures		
206.13	Pavement Materials	1	02/16/93
206.14	Traffic Signs	1	02/16/93
207	**Utilities - General**	1	02/16/93
208	**Sanitary Sewer Design**		
208.1	Design Capacity		
208.2	Manhole Criteria		
208.3	Sewer Lines	1	02/16/93
208.4	Curvilinear Sewers		
208.5	Service Laterals		
209	**On-site Wastewater Treatment and Disposal System Design**		
209.1	Design Criteria		
209.2	Percolation Tests		
209.3	Selection of Treatment or Disposal Alternative	1	02/16/93
210	**Water System Design**		
210.1	General Requirements		
210.2	Line Sizing		
210.3	Designations	1	02/16/93

Section	Title	Rev. No.	Date
211	Natural Gas	1	02/16/93
212	Steam		
213	Specialties		
214	Access and Security Control		
215	Surveying	1	02/16/93
215.1	General	1	02/16/93
215.2	Horizontal and Vertical Control	1	02/16/93
215.3	Monumentation	1	02/16/93
215.4	Surveys for New and Existing Utilities, Roads and Parking Areas	1	02/16/93
215.5	Surveys for Location of Existing Underground Utilities	1	02/16/93
215.6	Construction Staking	1	02/16/93
215.7	Soil Sampling Points	1	02/16/93
215.8	Building Structure/New Utilities	1	02/16/93
215.9	Survey Information Submittal	1	02/16/93
216	Site Improvements	1	02/16/93
216.1	Walks, Paths	1	02/16/93
216.2	Fences and Gates	1	02/16/93
220	Drawing List	1	02/16/93
300	Standard Drawings		
301	Introduction	1	02/16/93
302	Drawing List	1	02/16/93

205.8 Compaction

Optimum density shall be determined in accordance with ASTM D 1557. Field control of density of in-place material shall be determined in accordance with the Nuclear Method ASTM D 2922; or the relative density of cohesionless soils ASTM D 4253; and field control of moisture content will be determined by the Nuclear Method ASTM D 3017, or the Laboratory Determination ASTM D 4253 for cohesionless material.

Compaction requirements for approved material, moistened to optimum conditions, and placed in layers not to exceed 6 in., before compaction, shall be as follows:

% of Maximum Density	Type of Material
95	Embankment, backfill, subgrade and base course under building floor slab, concrete sidewalks, and paved areas.
90	Structural fill, backfill, general area grading, and embankments not under paved area.
85	Sand bedding for underground piping system, except under roadways where density shall be 95%.

205.9 Archaeological Clearance

Archaeological clearance shall be obtained for construction projects within the Laboratory boundaries prior to commencement of borrow pit and site grading operations. Archaeological clearance may be obtained by notifying the HS/EM Environmental Evaluations Coordinator. Cultural resource sites (human-associated ruins) found to be of archaeological significance will require testing, documentation and possible stabilization. The evaluation and mitigation process associated with archaeologic investigations can take several months for completion and may involve additional coordination with the New Mexico State Historical Preservation Office.

205.10 Erosion Control

Native vegetation must be reestablished in all areas disturbed by construction activity. The primary objective of revegetation efforts is the mitigation of site erosion. Mulching and seeding should commence immediately following completion of construction operations.

Designation: D 1557 – 78[ε1]

An American National Standard

Standard Test Methods for Moisture-Density Relations of Soils and Soil-Aggregate Mixtures Using 10-lb (4.54-kg) Rammer and 18-in. (457-mm) Drop[1]

This standard is issued under the fixed designation D 1557; the number immediately following the designation indicates the year of original adoption or, in the case of revision, the year of last revision. A number in parentheses indicates the year of last reapproval. A superscript epsilon (ε) indicates an editorial change since the last revision or reapproval.

This standard has been approved for use by agencies of the Department of Defense. Consult the DoD Index of Specifications and Standards for the specific year of issue which has been adopted by the Department of Defense.

[ε1] NOTE—Table 4 was corrected editorially in May 1988.

1. Scope

1.1 These laboratory compaction methods cover the determination of the relationship between the moisture content and density of soils and soil-aggregate mixtures (Note 1) when compacted in a mold of a given size with a 10-lb (4.54-kg) rammer dropped from a height of 18 in. (457 mm) (Note 2). Four alternative procedures are provided as follows:

1.1.1 *Method A*—A 4-in. (101.6-mm) mold; material passing a No. 4 (4.75-mm) sieve;

1.1.2 *Method B*—A 6-in. (152.4-mm) mold; material passing a No. 4 (4.75-mm) sieve;

1.1.3 *Method C*—A 6-in. (152.4-mm) mold; material passing a ¾-in. (19.0-mm) sieve; and

1.1.4 *Method D*—A 6-in. (152.4-mm) mold; material passing a ¾-in. (19.0-mm) sieve, corrected by replacement for material retained on a ¾-in. sieve.

NOTE 1—Soils and soil-aggregate mixtures should be regarded as natural occurring fine- or coarse-grained soils or composites or mixtures of natural soils, or mixtures of natural and processed soils or aggregates such as silt, gravel, or crushed rock.

NOTE 2—These laboratory compaction test methods when used on soils and soil-aggregates which are not free-draining will, in most cases, establish a well-defined optimum moisture content and maximum density (see Section 7). However, for free-draining soils and soil-aggregate mixtures, these methods will not, in many cases, produce a well-defined moisture-density relationship and the maximum density obtained will generally be less than that obtained by vibratory methods.

1.2 The method to be used should be indicated in the specifications for the material being tested. If no method is specified, the provisions of Section 5 shall govern.

1.3 *This standard may involve hazardous materials, operations, and equipment. This standard does not purport to address all of the safety problems associated with its use. It is the responsibility of the user of this standard to establish appropriate safety and health practices and determine the applicability of regulatory limitations prior to use.*

2. Referenced Documents

2.1 *ASTM Standards:*

C 127 Test Method for Specific Gravity and Absorption of Coarse Aggregate[2]

D 854 Test Method for Specific Gravity of Soils[3]

D 2168 Methods for Calibration of Laboratory Mechanical-Rammer Soil Compactors[3]

D 2216 Method for Laboratory Determination of Water (Moisture) Content of Soil, Rock, and Soil-Aggregate Mixtures[3]

D 2487 Test Method for Classification of Soils for Engineering Purposes[3]

D 2488 Practice for Description and Identification of Soils (Visual-Manual Procedure)[3]

E 11 Specification for Wire-Cloth Sieves for Testing Purposes[4]

3. Apparatus

3.1 *Molds*—The molds shall be cylindrical in shape, made of rigid metal and be within the capacity and dimensions indicated in 3.1.1 or 3.1.2. The molds may be the "split" type, consisting either of two half-round sections, or a section of pipe split along one element, which can be securely locked together to form a cylinder meeting the requirements of this section. The molds may also be the "taper" type, providing the internal diameter taper is uniform and is not more than 0.200 in./linear ft (16.7 mm/linear m) of mold height. Each mold shall have a base plate assembly and an extension collar assembly, both made of rigid metal and constructed so they can be securely attached to or detached from the mold. The extension collar assembly shall have a height extending above the top of the mold of at least 2 in. (50 mm) which may include an upper section that flares out to form a funnel providing there is at least a ¾-in. (19-mm) straight cylindrical section beneath it.

3.1.1 *Mold*, 4.0 in. (101.6 mm) in diameter, having a capacity of $1/30 \pm 0.0004$ ft^3 (944 ± 11 cm^3) and conforming to Fig. 1.

[1] These test methods are under the jurisdiction of ASTM Committee D-18 on Soil and Rock.

Current edition approved April 27, 1978. Published July 1978. Originally published as D 1557 – 58 T. Last previous edition D 1557 – 70.

[2] *Annual Book of ASTM Standards*, Vol 04.02.

[3] *Annual Book of ASTM Standards*, Vol 04.08.

[4] *Annual Book of ASTM Standards*, Vols 04.01, 04.06, and 14.02.

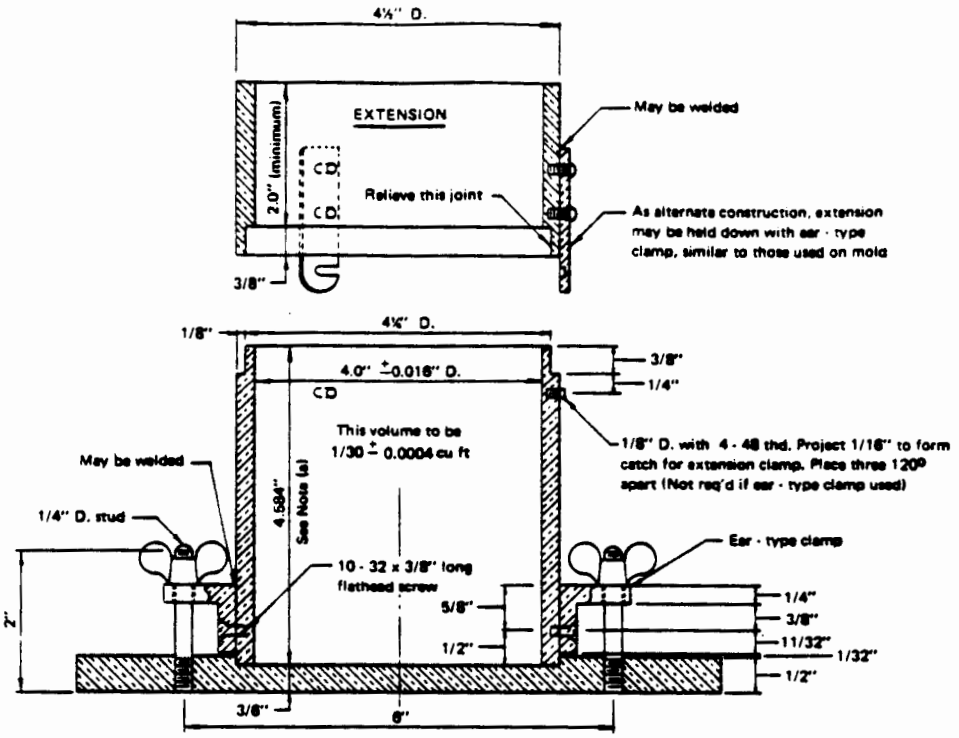

NOTE 1—The tolerance on the height is governed by the allowable volume and diameter tolerances.

NOTE 2—The methods shown for attaching the extension collar to the mold and the mold to the base plate are recommended. However, other methods are acceptable, providing the attachments are equally as rigid as those shown.

FIG. 1 Cylindrical Mold, 4.0-in. for Soil Tests (see Table 4 for metric equivalents)

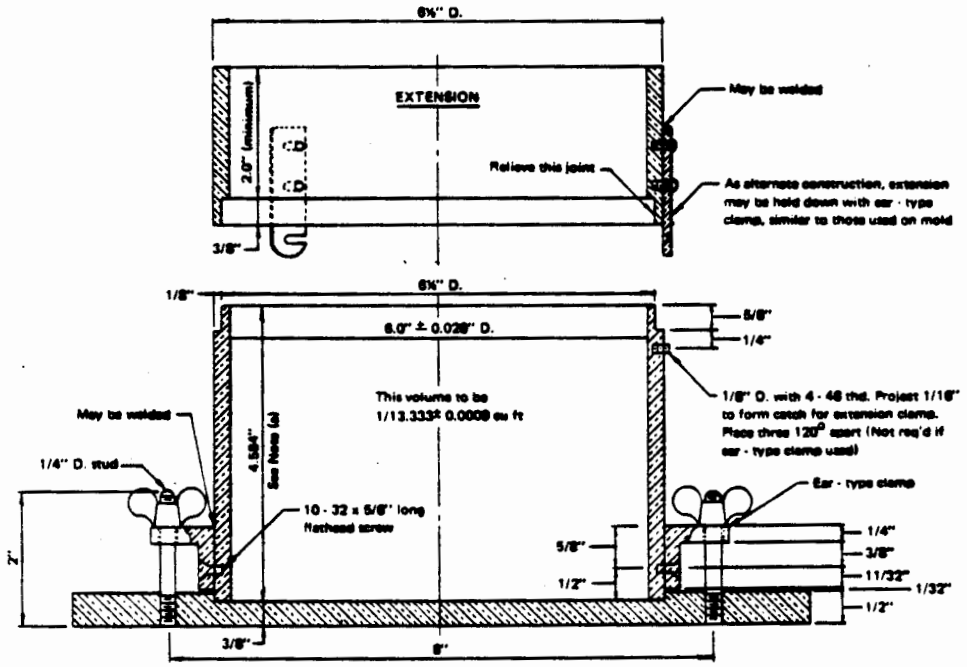

NOTE 1—The tolerance on the height is governed by the allowable volume and diameter tolerances.

NOTE 2—The methods shown for attaching the extension collar to the mold and the mold to the base plate are recommended. However, other methods are acceptable, providing the attachments are equally as rigid as those shown.

FIG. 2 Cylindrical Mold, 6.0-in. for Soil Tests (see Table 4 for metric equivalents)

3.1.2 *Mold*, 6.0 in. (152.4 mm) in diameter, having a capacity of 1/13.333 ± 0.0009 ft^3 (2124 ± 25 cm^3) and conforming to Fig. 2.

3.1.3 The average internal diameter, height, and volume of each mold shall be determined before initial use and at intervals not exceeding 1000 times the mold is filled. The mold volume shall be calculated from the average of at least six internal diameter and three height measurements made to the nearest 0.001 in. (0.02 mm), or from the amount of water required to completely fill the mold, corrected for temperature variance in accordance with Table 1. If the average internal diameter and volume are not within the tolerances shown in Figs. 1 or 2, the mold shall not be used. The determined volume shall be used in computing the required densities.

3.2 *Rammer*—The rammer may be either manually operated (see 3.2.1) or mechanically operated (see 3.2.2). The rammer shall fall freely through a distance of 18.0 ± 1/16 in. (457.2 ± 1.6 mm) from the surface of the specimen. The manufactured weight of the rammer shall be 10.00 ± 0.02 lb (4.54 ± 0.01 kg). The specimen contact face shall be flat.

3.2.1 *Manual Rammer*—The specimen contact face shall be circular with a diameter of 2.000 ± 0.005 in. (50.80 ± 0.13 mm). The rammer shall be equipped with a guidesleeve which shall provide sufficient clearance so that the free fall of the rammer shaft and head will not be restricted. The guidesleeve shall have four vent holes at each end (eight holes total) located with centers 3/4 ± 1/16 in. (19.0 ± 1.6 mm) from each end and spaced 90° apart. The minimum diameter of the vent holes shall be 3/8 in. (9.5 mm).

3.2.2 *Mechanical Rammer*—The rammer shall operate mechanically in such a manner as to provide uniform and complete coverage of the specimen surface. There shall be 0.10 ± 0.03 in. (2.5 ± 0.8 mm) clearance between the rammer and the inside surface of the mold at its smallest diameter. When used with the 4.0-in. (101.6-mm) mold, the specimen contact face shall be circular with a diameter of 2.000 ± 0.005 in. (50.80 ± 0.13 mm). When used with the 6.0-in. (152.4-mm) mold, the specimen contact face shall have the shape of a section of a circle of a radius equal to 2.90 ± 0.02 in. (73.7 ± 0.5 mm). The sector face rammer shall operate in such a manner that the vertex of the sector is positioned at the center of the specimen. The mechanical rammer shall be calibrated and adjusted, as necessary, in accordance with 3.2.3.

3.2.3 *Calibration and Adjustment*—The mechanical rammer shall be calibrated, and adjusted as necessary, before initial use; near the end of each period during which the mold was filled 1000 times; before reuse after anything, including repairs, which may affect the test results significantly; and whenever the test results are questionable. Each calibration and adjustment shall be in accordance with Methods D 2168.

TABLE 1 Volume of Water per Gram based on Temperature[A]

Temperature, °C (°F)	Volume of Water, mL/g
12 (53.6)	1.00048
14 (57.2)	1.00073
16 (60.8)	1.00103
16 (64.4)	1.00138
20 (68.0)	1.00177
22 (71.6)	1.00221
24 (75.2)	1.00268
26 (78.8)	1.00320
28 (82.4)	1.00375
30 (86.0)	1.00435
32 (89.6)	1.00497

[A] Values other than shown may be obtained by referring to the *Handbook of Chemistry and Physics*, Chemical Rubber Publishing Co., Cleveland, OH.

3.3 *Sample Extruder* (optional)—A jack, frame, or other device adapted for the purpose of extruding compacted specimens from the mold.

3.4 *Balances*—A balance or scale of at least 20-kg capacity sensitive to ±1 g and a balance of at least 1000-g capacity sensitive to ±0.01 g.

3.5 *Drying Oven*, thermostatically-controlled, preferably of the forced-draft type, capable of maintaining a temperature of 230 ± 9°F (110 ± 5°C) for determining the moisture content of the compacted specimen.

3.6 *Straightedge*—A stiff metal straightedge of any convenient length but not less than 10 in. (254 mm). The scraping edge shall have a straightness tolerance of ±0.005 in. (±0.13 mm) and shall be beveled if it is thicker than 1/8 in. (3 mm).

3.7 *Sieves*, 3-in. (75-mm), 3/4-in. (19.0-mm), and No. 4 (4.75-mm), conforming to the requirements of Specification E 11.

3.8 *Mixing Tools*—Miscellaneous tools such as mixing pan, spoon, trowel, spatula, etc., or a suitable mechanical device for thoroughly mixing the sample of soil with increments of water.

4. Procedure

4.1 *Specimen Preparation*—Select a representative portion of quantity adequate to provide, after sieving, an amount of material weighing as follows: Methods A—25 lb (11 kg); Methods B, C, and D—50 lb (23 kg). Prepare specimens in accordance with either 4.1.1 through 4.1.3 or 4.1.4.

4.1.1 *Dry Preparation Procedure*—If the sample is too damp to be friable, reduce the moisture content by drying until the material is friable; see 4.1.2. Drying may be in air or by the use of a drying apparatus such that the temperature of the sample does not exceed 140°F (60°C). After drying (if required), thoroughly break up the aggregations in such a manner as to avoid reducing the natural size of the particles. Pass the material through the specified sieve as follows: Methods A and B—No. 4 (4.75-mm); Methods C and D—3/4-in. (19.0-mm). Correct for oversize material in accordance with Section 5, if Method D is specified.

4.1.2 Whenever practicable, soils classified as ML, CL, OL, GC, SC, MH, CH, OH and PT by Test Method D 2487 shall be prepared in accordance with 4.1.4.

4.1.3 Prepare a series of at least four specimens by adding increasing amounts of water to each sample so that the moisture contents vary by approximately 1½ %. The moisture contents selected shall bracket the optimum moisture content, thus providing specimens which, when compacted, will increase in mass to the maximum density and then decrease in density (see 7.2 and 7.3). Thoroughly mix each specimen to ensure even distribution of moisture throughout and then place in a separate covered container and allow to stand prior to compaction in accordance with Table 2. For the purpose of selecting a standing time, it is not required to

TABLE 2 Dry Preparation Method—Standing Times

Classification D 2487	Minimum Standing Time, h
GW, GP, SW, SP	no requirement
GM, SM	3
ML, CL, OL, GC, SC	18
MH, CH, OH, PT	36

TABLE 3 Precision

	Standard Deviation, s	Acceptable Range of Two Results, Expressed as Percent of Mean Value[A]
Single-operator precision:		
Maximum density	...	1.9
Optimum moisture content	...	9.5
Multilaboratory precision:		
Maximum density	±1.66	4.0
Optimum moisture content	±0.66	15.0

[A] This column indicates a limiting range of values which should not be exceeded by the difference between any two results, expressed as a percentage of the average value. In cooperative test programs it has been determined that 95 % of the tests do not exceed the limiting acceptable ranges shown below. All values shown in this table are based on average test results from a variety of different soils and are subject to future revision.

TABLE 4 Metric Equivalents for Figs. 1 and 2

in.	mm
0.016	0.41
0.026	0.66
1/32	0.8
1/16	1.6
1/8	3.2
1/4	6.4
11/32	8.7
3/8	9.5
1/2	12.7
5/8	15.9
2	50.8
2 1/2	63.5
4	101.6
4 1/4	108.0
4 1/2	114.3
4.584	116.43
6	152.4
6 1/2	165.1
8	203.2
ft³	**cm³**
1/30	944
0.0004†	11
1/1,200	2124
0.0009	25

† Editorially corrected.

perform the actual classification procedures described in Test Method D 2487 (except in the case of referee testing), if previous data exist which provide a basis for classifying the sample.

4.1.4 *Moist Preparation Method*—The following alternate procedure is recommended for soils classified as ML, CL, OL, GC, SC, MH, CH, OH and PT by Test Method D 2487. Without previously drying the sample, pass it through the 3/4-in. (19.0-mm) and No. 4 (4.75-mm) sieves. Correct for oversize material in accordance with Section 5, if Method D is specified. Prepare a series of at least four specimens having moisture contents that vary by approximately 1 1/2 %. The moisture contents selected shall bracket the optimum moisture content, thus providing specimens which, when compacted, will increase in mass to the maximum density and then decrease in density (see 7.2 and 7.3). To obtain the appropriate moisture content of each specimen, the addition of a predetermined amount of water (see 4.1.3) or the removal of a predetermined amount of moisture by drying may be necessary. Drying may be in air or by the use of a drying apparatus such that the temperature of the specimen does not exceed 140°F (60°C). The prepared specimens shall then be thoroughly mixed and stand, as specified in 4.1.3 and Table 2, prior to compaction.

NOTE 3—With practice, it is usually possible to visually judge the point of optimum moisture closely enough so that the prepared specimens will bracket the point of optimum moisture content.

4.2 *Specimen Compaction*—Select the proper compaction mold, in accordance with the method being used, and attach the mold extension collar. Compact each specimen in five layers of approximately equal height. Each layer shall receive 25 blows in the case of the 4-in. (101.6-mm) mold; each layer shall receive 56 blows in the case of the 6-in. (152.4-mm) mold. The total amount of material used shall be such that the fifth compacted layer is slightly above the top of the mold, but not exceeding 1/4 in. (6 mm). During compaction the mold shall rest on a uniform rigid foundation, such as provided by a cylinder or cube of concrete weighing not less than 200 lb (91 kg).

4.2.1 In operating the manual rammer, care shall be taken to avoid rebound of the rammer from the top end of the guidesleeve. The guidesleeve shall be held steady and within 5 deg of the vertical. The blows shall be applied at a uniform rate not exceeding approximately 1.4 s per blow and in such a manner as to provide complete and uniform coverage of the specimen surface.

4.2.2 *Mold Sizes*—The mold size used shall be as follows: Method A, 4-in. (101.6-mm); Methods B, C, and D, 6-in. (152.4-mm).

4.2.3 Following compaction, remove the extension collar; carefully trim the compacted specimen even with the top of the mold by means of the straightedge and determine the mass of the specimen. Divide the mass of the compacted specimen and mold, minus the mass of the mold, by the volume of the mold (see 3.1.3). Record the result as the wet density, γ_m, in pounds per cubic foot (or kilograms per cubic metre) of the compacted specimen.

4.2.4 Remove the material from the mold. Determine moisture content in accordance with Method D 2216, using either the whole compacted specimen or alternatively a representative specimen of the whole specimen. The whole specimen must be used when the permeability of the compacted specimen is high enough so that the moisture content is not distributed uniformly throughout. If the whole specimen is used, break it up to facilitate drying. Obtain the representative specimen by slicing the compacted specimen axially through the center and removing 100 to 500 g of material from one of the cut faces.

4.2.5 Repeat 4.2 through 4.2.4 for each specimen prepared.

5. Oversize Corrections

5.1 If 30 % or more of the sample is retained on a 3/4-in. (19.0-mm) sieve, then none of the methods described under

these methods shall be used for the determination of either maximum density or optimum moisture content.

5.2 *Methods A and B*—The material retained on the No. 4 (4.75-mm) sieve is discarded and no oversize correction is made. However, it is recommended that if the amount of material retained is 7 % or greater, Method C be used instead.

5.3 *Method C*—The material retained on the ¾-in. (19.0-mm) sieve is discarded and no oversize correction is made. However, if the amount of material retained is 10 % or greater, it is recommended that Method D be used instead.

5.4 *Method D:*

5.4.1 This method shall not be used unless the amount of material retained on the ¾-in. (19.0-mm) sieve is 10 % or greater. When the amount of material retained on the ¾-in. sieve is less than 10 %, use Method C.

5.4.2 Pass the material retained on the ¾-in. (19.0-mm) sieve through a 3-in. or 75-mm sieve. Discard the material retained on the 3-in. sieve. The material passing the 3-in. sieve and retained on the ¾-in. sieve shall be replaced with an equal amount of material passing a ¾-in. sieve and retained on a No. 4 (4.75-mm) sieve. The material for replacement shall be taken from an unused portion of the sample.

6. Calculations

6.1 Calculate the moisture content and the dry density of each compacted specimen as follows:

$$w = [(A - B)/(B - C)] \times 100$$

and

$$\gamma_d = [\gamma_m/(w + 100)] \times 100$$

where:

w = moisture content in percent of the compacted specimens,
A = mass of contained and moist specimen,
B = mass of container and oven-dried specimen,
C = mass of container,
γ_d = dry density, in pounds per cubic foot (or kilograms per cubic metre) of the compacted specimen, and
γ_m = wet density, in pounds per cubic foot (or kilograms per cubic metre) of the compacted specimen.

7. Moisture-Density Relationship

7.1 From the data obtained in 6.1, plot the dry density values as ordinates with corresponding moisture contents as abscissas. Draw a smooth curve connecting the plotted points. Also draw a curve termed the "curve of complete saturation" or "zero air voids curve" on this plot. This curve represents the relationship between dry density and corresponding moisture contents when the voids are completely filled with water. Values of dry density and corresponding moisture contents for plotting the curve of complete saturation can be computed using the following equation:

$$w_{sat} = [(62.4/\gamma_d) - (1/G_s)] \times 100$$

where:

w_{sat} = moisture content in percent for complete saturation,
γ_d = dry density in pounds per cubic foot (or kilograms per cubic metre),
G_s = specific gravity of the material being tested (see Note 4), and
62.4 = density of water in pounds per cubic foot (or kilograms per cubic metre).

NOTE 4—The specific gravity of the material can either be assumed or based on the weighted average values of: (*a*) the specific gravity of the material passing the No. 4 (4.75-mm) sieve in accordance with Test Method D 854; and (*b*) the apparent specific gravity of the material retained on the No. 4 (4.75-mm) sieve in accordance with Test Method C 127.

7.2 *Optimum Moisture Content*, w_o—The moisture content corresponding to the peak of the curve drawn as directed in 7.1 shall be termed the "optimum moisture content."

7.3 *Maximum Density*, γ_{max}—The dry density in pounds per cubic foot (or kilograms per cubic metre) of the sample at "optimum moisture content" shall be termed "maximum density."

8. Report

8.1 The report shall include the following:

8.1.1 Method used (Method A, B, C, or D).

8.1.2 Optimum moisture content.

8.1.3 Maximum density.

8.1.4 Description of rammer (whether manual or mechanical).

8.1.5 Description of appearance of material used in test, based on Practice D 2488 (Test Method D 2487 may be used as an alternative).

8.1.6 Origin of material used in test.

8.1.7 Preparation procedure used (moist or dry).

9. Precision

9.1 Criteria for judging the acceptability of the maximum density and optimum moisture content test results are given in Table 3. The standard deviation s is calculated from the equation:

$$s^2 = \frac{1}{n-1} \sum_{1}^{n} (x - \bar{x})^2$$

where:

n = number of determinations;
x = individual value of each determination; and
$\bar{x}$ = numerical average of the determinations.

9.2 Criteria for assigning standard deviation values for single-operator precision are not available at the present time.

The American Society for Testing and Materials takes no position respecting the validity of any patent rights asserted in connection with any item mentioned in this standard. Users of this standard are expressly advised that determination of the validity of any such patent rights, and the risk of infringement of such rights, are entirely their own responsibility.

This standard is subject to revision at any time by the responsible technical committee and must be reviewed every five years and if not revised, either reapproved or withdrawn. Your comments are invited either for revision of this standard or for additional standards and should be addressed to ASTM Headquarters. Your comments will receive careful consideration at a meeting of the responsible technical committee, which you may attend. If you feel that your comments have not received a fair hearing you should make your views known to the ASTM Committee on Standards, 1916 Race St., Philadelphia, PA 19103.

Designation: D 2922 – 81

Standard Test Methods for Density of Soil and Soil-Aggregate in Place by Nuclear Methods (Shallow Depth)[1]

This standard is issued under the fixed designation D 2922; the number immediately following the designation indicates the year of original adoption or, in the case of revision, the year of last revision. A number in parentheses indicates the year of last reapproval. A superscript epsilon (ε) indicates an editorial change since the last revision or reapproval.

These methods have been approved for use by agencies of the Department of Defense and for listing in the DoD Index of Specifications and Standards.

INTRODUCTION

These methods describe determination of the density of soil and soil-aggregate in place using nuclear equipment. In general, the total or wet density of the material under test is determined by placing a gamma source and a gamma detector either on, into, or adjacent to the material under test. These variations in test geometry are presented as the backscatter, direct transmission, or optional air gap approaches. The intensity of radiation detected is dependent in part upon the density of the material under test. The radiation intensity reading is converted to measured wet density by a suitable calibration curve. Principles of the nuclear test are discussed in the Appendix, as are some of its advantages and disadvantages. It should be noted that the density determined by these methods is not necessarily the average density within the volume involved in the measurement and that the equipment utilizes radioactive materials which may be hazardous to the health of users unless proper precautions are taken.

1. Scope

1.1 These methods cover the determination of the total or wet density of soil and soil-aggregate in place by the attenuation of gamma rays where the gamma source or gamma detector, or both, remain at or near the surface. The methods described are normally suitable to a test depth of approximately 2 to 12 in. (50 to 300 mm), depending on the test geometry used.

1.2 Three methods are described as follows:

	Section
Method A—Backscatter	9
Method B—Direct Transmission	10
Method C—Air Gap (Optional)	11

1.3 The values stated in inch-pound units are to be regarded as the standard. The metric equivalents of inch-pound units may be approximate.

2. Referenced Documents

2.1 *ASTM Standards:*

D 1556 Test Method for Density of Soil in Place by the Sand-Cone Method[2]

D 2167 Test Method for Density and Unit Weight of Soil in Place by the Rubber-Balloon Method[2]

D 2216 Method for Laboratory Determination of Water (Moisture) Content of Soil, Rock, and Soil-Aggregate Mixtures[2]

D 3017 Test Method for Moisture Content of Soil and Soil-Aggregate in Place by Nuclear Methods (Shallow Depth)[2]

3. Significance and Use

3.1 The methods described are useful as rapid, nondestructive techniques for the in-place determination of wet density of soil and soil-aggregate. The fundamental assumptions inherent in the methods are that Compton scattering is the dominant interaction and that the material within the zone of influence for each test is homogeneous.

3.2 Test results may be affected by chemical composition, sample heterogeneity, and the surface texture of the material being tested. The techniques also exhibit spatial bias in that the apparatus is more sensitive to certain regions of the material under test.

4. Calibration

4.1 Laboratory calibration of the gage is established by determining the nuclear count rate of each of several materials at different and known densities and establishing a relationship between count rate and density. Sufficient data should be taken at each density to ensure a precision of at least twice the normal precision obtained in field use. Calibration can be accomplished by either laboratory or field methods. Laboratory methods are recommended due to the higher inherent accuracy of laboratory standards and instruments as opposed to field methods which require the volume measurement of an excavated hole.

NOTE 1—Different chemical compositions of the blocks or other materials can affect the count rate. Calibration curves may not be applicable to materials not represented in establishing the calibration curve.

[1] These methods are under the jurisdiction of ASTM Committee D-18 on Soil and Rock.

Current edition approved May 29, 1981. Published September 1981. Originally published as D 2922 – 71. Last previous edition D 2922 – 78.

[2] The Annual Book of ASTM Standards, Vol 04.08.

4.1.1 Laboratory calibration should involve the use of a minimum of five homogeneous blocks sufficiently large to represent an infinite volume to the nuclear instrument. The density of these standards shall be determined to an accuracy of ±0.2 % (±0.3 lb/ft^3 at 160 lb/ft^3 or ±5 kg/m^3 at 2565 kg/m^3). Three of the standards shall be constructed of materials having gamma mass attenuation coefficients within ±1.0 % of each other over the range of gamma energy utilized by the gage for density measurement. These standards will be used to establish the gage response to density variations in the range from 100 to 170 lb/ft^3 (1600 to 2725 kg/m^3). The last two standards shall be materials that equally bracket the gamma mass attentuation coefficient of soils. Suggested materials are limestone and granite. The gage response will then be rotated about the zero density point on a plot or graphical representation such that it falls halfway between the limestone and granite data. This final response will be used in the field for measurement.

4.1.2 Field calibration may be used where laboratory calibration facilities are not available or where it becomes necessary to calibrate the instrument for materials that chemically are different than soils. A minimum of ten field tests should be used for establishing calibration by the field method so that a range of densities and materials will be represented. The sand-cone method in accordance with Test Method D 1556 or the rubber-balloon method in accordance with Test Method D 2167 may be used to determine the wet range of density of carefully selected field sites on which density data have been previously determined. As an alternative, nuclear data can be obtained on prepared containers of soil and soil-aggregate compacted to known densities. The containers must be sufficiently large to represent an infinite volume to the nuclear instrument. Data from either of these methods may be used to establish a new gage response by visually fitting a line to a plot of gage response to density over the range of densities found in the samples. It is more desirable to use the latter data, to rotate the laboratory calibration in 4.1.1, or a constant offset from this laboratory calibration, to fit the field data. Extreme care must be exercised in the determination of wet density in either the field sites or prepared containers. Because of the variability and scatter inherent in field tests and container preparation and compaction, this method is considered less accurate than techniques using calibration blocks.

NOTE 2—Use of blocks is advantageous because they are durable and provide stable density references. Blocks and prepared containers must be large enough not to change the observed count rate (or count ratio) if made larger in any dimensions. Dimensions of approximately 12 in. (300 mm) width by 14 in. (360 mm) depth by 22 in. (560 mm) length have proven satisfactory for equipment now available. For calibration of backscatter only, a depth of not less than 9 in. (230 mm) is adequate.

4.2 *Checking and Adjusting Calibration Data*—The calibration data for newly acquired instruments, instruments for which the calibration is more than one year old, or instruments that have been damaged and repaired may be checked by using the method of 4.1.2. A minimum of ten field tests must be used to compare with the existing calibration data in order to justify changing the calibration.

4.2.1 If each of the field tests varies by not more than 3 % from the nuclear density and some of the field densities are greater and some less than the nuclear density, then adjustment of the calibration is not necessary.

4.2.2 If all of the field tests are more or all less than the nuclear density and the average of the difference exceeds 1 %, then adjust each subsequent nuclear density by the average difference.

4.2.3 The average difference found in 4.2.2 may be used to determine a new calibration response. Either rotation about a zero point or constant offset from the original calibration may be used.

NOTE 3—Adjusting calibration curves is a complex task and it should be attempted only by those knowledgeable in this field. Most manufacturers either provide this service or will offer assistance to the user.

5. System Specifications

5.1 Any equipment that is used under the requirements of this method shall satisfy the following specifications:

5.1.1 *Precision*—Precision of the system is determined from the slope of the calibration response and the statistical deviation of the count for the recommended period of measurement, which shall be at least 1 min:

$$P = \sigma / S \tag{1}$$

where:

P = precision,
σ = standard deviation, counts per measurement period, and
S = slope, Δ counts per measurement period/(lb/ft^3) or (kg/m^3).

5.1.1.1 Determine the slope of the counts per measurement period at a unit weight of 125 lb/ft^3 (2000 kg/m^3). This can usually be determined from the calibration response and must be the true counts from the detector system before the display. Determine the counts per measurement period at the same density by the same method. The precision can be calculated by:

$$P = \sqrt{C/PC}/S \tag{2}$$

where:

P = precision,
C = counts per measurement period,
S = slope, Δ counts per measurement period/(lb/ft^3) or (kg/m^3), and
PC = amount of prescale (Note 4) applied to the detector counts prior to display. The manufacturer will supply this value. If no prescale is built into the equipment, the value is 1.

NOTE 4—The value of prescale is the number by which the total count rate of the detector(s) is divided before display on the readout to eliminate the need for displaying non-significant digits. The value of P at a density of 125 lb/ft^3 (2000 kg/m^3) shall be no greater than ±1.0 lb/ft^3 (±16 kg/m^3) for the backscatter methods nor greater than ±0.35 lb/ft^3 (±6 kg/m^3) for direct transmission method.

5.1.1.2 If 5.1.1 cannot be performed as above, the precision can be computed by determining the standard deviatic of at least 20 repetitive measurements (gage not moved af, it the first measurement) of material having density of 125, the 5.0 lb/ft^3 (2000 ± 80 kg/m^3). In order to perform procedure, the resolution of the count display, calibr response, or other method of displaying density mi probe equal to or better than ±0.1 lb/ft^3 (±1.6 kg/m^3).

5.1.2 *Chemical Error*—The error due to changes in chemical composition of materials having gamma mass attenuation coefficients less than those of granite or greater than those of limestone shall be not greater than ±2.5 % of backscatter methods and ±1.2 % for direct transmission with the source at a depth of 6 in. (150 mm).

5.1.2.1 If the instrument was originally calibrated by the method described in 4.1.1, then the chemical error can be easily determined by using the standard block data which was taken to determine the gage response. Using the gage count rate on the limestone standard and the calibrated gage response, determine the gage density of the limestone standard. This will normally be higher than the true density. Compute the percent error. Repeat the same procedure for the granite standard. This will normally be lower than the true density. The difference between the two percent errors (taking into account the sign of the error) divided by two will equal the chemical error.

5.1.2.2 If the gage was calibrated by some means other than 4.1.1 or if the original calibration data are not available, then other means must be used to determine the chemical error. Using the procedure of 5.1.2.1, the relative densities of the limestone and granite standard blocks were not important, but using this procedure the standards should preferably be within 5 lb/ft^3 (80 kg/m^3) of each other in order to eliminate the possibility of an improper calibration which could cause good accuracy and small chemical error at the limestone and granite density but with large errors at all other densities. A high-density limestone or marble standard is suggested. First measure the density and compute the percent error on each standard. The chemical error is then the difference between the two errors divided by two. The sum of the two errors represents the calibration accuracy.

5.1.3 *Surface Roughness Error*—The error caused by a 0.050-in. (1.3-mm) air gap introduced between the base of the gage and the surface of the material being measured should cause an error of no more than 4 % in the backscatter method nor more than 1% in the direct-transmission method with the source placed at a 6-in. (150-mm) depth. Older models of instruments currently in use may not meet this requirement. The users can minimize the effects of surface roughness by careful site preparation.

5.1.3.1 The effect of surface roughness can be measured by placing the instrument on a smooth flat surface after cleaning both the surface and the gage base and measuring the density. Next, elevate the gage by placing 0.050-in. (1.3-mm) spacers between the gage base and the material surface in such a way as to not interfere with the gage measurement zone. Remeasure the apparent density; the difference represents the gage error.

6. Safety Precaution

6.1 This equipment utilizes radioactive materials which may be hazardous to the health of the users, unless proper precautions are taken. Users of this equipment must become completely familiar with possible safety hazards and with all applicable government regulations. Effective operator instruction together with routine safety procedures such as wipe-leak tests, recording and elevation of film badge data, of survey meters, etc., are an essential part of the operation of equipment of this type.

7. Apparatus

7.1 The apparatus may consist of items to perform Method A—Backscatter, Method B—Direct Transmission or a combination of both. Items listed are common to both apparatus except where noted as Method A or Method B only. Apparatus for Method C—Air Gap (optional) is detailed in Section 11.

7.2 *Gamma Source*—An encapsulated and sealed radioactive source meeting the specific form requirements of Title 49 of the Code of Federal Regulations.

7.3 *Gamma Detector*—Any suitable type.

7.4 *Readout Device*—A suitable scaler with a resolution and range to display counts over the range of density for which the apparatus will be used. Usually the scaler will also contain other electronic devices and the necessary electrical power for operation.

7.5 *Housing*—The source, detector, readout device, etc. shall be in housings of rugged construction that are moisture- and dustproof. For Method B use, the housing shall contain a means of locating either the source of detector at a distance of 2 to 12 in. (50 to 300 mm) into a preformed hole in the material to be tested. The probe containing the source or detector shall be sufficiently rigid so as to maintain a constant distance along the measuring path length and also contain markings to indicate the depth to which the probe has been placed.

NOTE 5—The gamma source, detector, readout device, and power supply may be housed separately or combined and integrated with a nuclear moisture-measuring system.

7.6 *Reference Standard*—A device that isolates the instrument and provides a means of allowing the instrument to make a measurement that is constant within the reproducibility of the system. All calibrations will be made as a ratio to the reference standard count and all field measurements will be taken as a ratio to the reference standard count.

7.7 *Site-Preparation Devices*:

7.7.1 Method A equipment shall include a flat plate, straightedge, or other suitable tool to be used to level the test site to the required smoothness.

7.7.2 Method B equipment shall, in addition to the above, include a hole-forming device such as an auger or pin having a nominal diameter equal to or up to ⅛ (3 mm) larger than the probe and also a guide to ensure that the hole is perpendicular to the test site surface.

7.8 *Transport Case*—Each system shall include a shipping and transport case to house the equipment and shall meet the U.S. Department of Transportation requirements in Title 49 of the Code of Federal Regulations. The exterior of the case shall contain all labels required by the regulations and radiation levels shall meet the "Yellow II" standards.

8. Standardization

8.1 All nuclear density instruments are subject to long-term aging of the radioactive source, detectors, and electronic systems, which may change the relationship between count rate and density. To offset this aging, all instruments are calibrated as a ratio of the measurement count rate to a count rate made on a reference standard. The reference count rate should be in the same order of magnitude of

higher than the range of measurement count rates over the useful density range of the equipment.

8.2 Standardization of equipment on the reference standard is required at the start of each day's use and a permanent record of these data should be retained.

8.3 Turn on the equipment and allow for stabilization of the equipment in accordance with the manufacturer's recommendations.

8.4 Take at least four repetitive readings at the normal measurement period and obtain the mean. If available on the instrument, one measurement at a period of four times the normal period is acceptable. This constitutes one standardization check.

8.5 If the value obtained above is within the limits set by Eq 3, the equipment is considered to be in satisfactory condition and may be used. If the value obtained is outside the limits set by Eq 3, another standardization check should be made. If the second standardization check is within the limits, the equipment may be used; but if it also fails the test, the equipment should be checked as recommended by the manufacturer and the calibration checked (4.2) or recalibrated, or both.

$$N_s = N_o \pm 2.0\sqrt{N_o}/PC \quad (3)$$

where:

N_s = value of current standardization check (8.4) on the reference standard (7.6),

N_o = average of the past four values of N_s taken for prior useage, and

PC = amount of prescale applied to the detector counts prior to display. The manufacturer will supply this value. If no prescale is built into the equipment, the value is 1.

8.6 The value of N_s (8.4) will be used to determine the count ratios for the current day's use of the equipment. If, for any reason, measured densities become suspect during the day's use, another standardization should be performed.

NOTE 6—If the instrument is to be used either continuously or intermittently during the day, it is generally best to leave it in the "power on" or "standby" condition during the day to prevent having to repeat the standardization. This will provide more stable, consistent results.

NOTE 7—Standardization shall be performed in accordance with the manufacturer's recommendations and away from other radioactive sources, large masses of metal or vertical objects, free water, or other items that can affect the gage readings.

9. Procedure, Method A—Backscatter

9.1 Standardize the instrument (Section 8).

9.2 Select a test location where the gage in test position will be at least 9 in. (230 mm) away from any vertical projection.

9.3 Prepare the test site in the following manner:

9.3.1 Remove all loose and disturbed material and additional material as necessary to expose the top of the material to be tested.

NOTE 8—The spatial bias should be considered in determining the depth at which the gage is to be seated.

9.3.2 Prepare a horizontal area sufficient in size to accommodate the gage, by planing the area to a smooth condition so as to obtain maximum contact between the gage and material being tested.

9.3.3 The maximum void beneath the gage shall not exceed approximately ⅛ in. (3 mm). Use native fines or fine sand to fill these voids and smooth the surface with a rigid plate or other suitable tool.

NOTE 9—The placement of the gage on the surface of the material to be tested is critical to the successful determination of density. The optimum condition is total contact between the bottom surface of the gage and the surface of the material being tested. This is not possible in all cases. To correct surface irregularities, use of native fines or sand as a filler is necessary. The depth of the filler should not exceed approximately ⅛ in. (3 mm) and the total area filled should not exceed 10 % of the bottom area of the gage. Several trial seatings may be required to achieve these conditions.

9.4 Proceed with the test in the following manner:

9.4.1 Seat the gage firmly.

9.4.2 Keep all other radioactive sources away from the gage to avoid affecting the measurement

9.4.3 Secure and record one or more readings for the normal measurement period.

9.4.4 Determine the ratio of the reading to the standard count (9.1). From this ratio and the calibration, determine the in-place wet density.

NOTE 10—Some instruments have built-in provisions to compute the ratio, compute the in-place wet density, and display it to the operator automatically.

10. Procedure, Method B — Direct Transmission

10.1 Standardize the instrument (Section 8).

10.2 Select a test location where the gage in test position will be at least 9 in. (230 mm) away from any vertical projection.

10.3 Prepare the test site in the following manner:

10.3.1 Remove all loose and disturbed material, and remove additional material as necessary to expose the top of the material to be tested.

10.3.2 Prepare a horizontal area, sufficient in size to accommodate the gage, by planing the area of a smooth condition so as to obtain maximum contact between the gage and material being tested.

10.3.3 The maximum void beneath the gage shall not exceed approximately ⅛ in. (3 mm). Use native fines or fine sand to fill these voids and smooth the surface with a rigid plate or other suitable tool. The depth of the filler should not exceed approximately ⅛ in. (3 mm).

10.3.4 Make a hole perpendicular to the prepared surface using the guide and the hole-forming device (7.6.2). The hole shall be of such depth and alignment that insertion of the probe will not cause the gage to tilt from the plane of the prepared area. The depth of the hole must be at least 2 in. (50 mm) deeper than the depth to which the probe will be placed. The guide shall be the same size as the base of the gage, with the hole in the same location on the guide as the probe on the gage. The corners of the guide are marked by scoring the surface of the soil.

10.4 Proceed with testing in the following manner:

10.4.1 Set the gage on the soil surface, carefully aligning it with the marks so that the probe will be directly over the pre-formed hole.

10.4.2 Insert the probe in the hole.

10.4.3 Seat the gage firmly by rotating it about the probe with a back and forth motion.

10.4.4 Pull gently on the gage in the direction that will bring the side of the probe against the side of the hole closest to the detector (or source) location in the gage housing.

10.4.5 Keep all other radioactive sources away from the gage to avoid affecting the measurement.

10.4.6 Secure and and record one or more readings for the normal measurement period.

10.4.7 Determine the ratio of the reading to the standard count (10.1). From the ratio and the calibration, determine the in-place wet density.

11. Procedure, Method C—Air Gap (Optional)

11.1 If the nuclear gage errors due to calibration using materials with different chemical composition are in excess of maximum errors listed in 5.2, the air-gap method should be employed. It should be noted that the required use of two different site measurements may decrease the precision due to the statistics of the air gap measurement.

11.2 *Apparatus*:

11.2.1 All apparatus described in Section 7.

11.2.2 *Cradle or Spacers*, to support the gage at the optimum air gap above the material being tested. The cradles or spacers shall be so designed as to support the gage at optimum height without shielding the base of the gage. Figure 1 shows a typical air-gap cradle that demonstrates the principle. The cradle shown in Fig. 1 is not the only satisfactory method. Other methods which support the gage at the optimum air gap without shielding the base of the gage are satisfactory.

NOTE 11—Air-gap calibration curves and optimum air gap may be furnished for each gage by the manufacturer and can be readily checked by the user.

11.3 *Determination of Optimum Air Gap*—To determine the optimum air gap for use in the air-gap method, proceed as follows:

11.3.1 Use three or more different areas on which to make determinations. These areas may be either blocks (4.1.1) or field sites of compacted soil or soil-aggregate on which density data have been previously determined (4.1.2) or alternative prepared containers of soil or soil-aggregate compacted to known densities (4.1.2). The density of materials at the selected areas should vary through a range including the densities of the materials which will be tested.

11.3.2 Place the density gage over the test area. Support the gage by blocks placed at the extreme edges of the gage so as not to obstruct the space between the bottom of the gage and the surface of the test area.

11.3.3 Take and record readings for two normal measurement periods in counts per minute and determine the average of the readings.

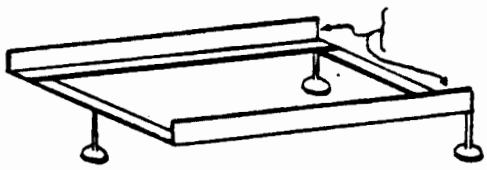

Welded metal approx. 1 by 1 by ⅛ in. (25.4 by 25.4 by 3.2 mm) angle.

FIG. 1 Typical Air-Gap Cradle

11.3.4 By adding additional blocks or spacers, increase the air gap by ¼ in. (6.3 mm). Take and record, and average readings for two additional normal measurement periods.

11.3.5 Continue increasing the air gap by increments of ¼ in., securing average readings for each air gap (11.3.3) until there is a decrease in the counts per minute readings with an increase in air gap.

11.3.6 On an arithmetic scale, plot counts per minute as the ordinate *versus* each air gap (in inches or millimetres) and draw a smooth curve through the resulting points. Record the peak air gap determined at the peak of the curve.

11.3.7 Repeat procedures 11.3.2 through 11.3.6 over two or more additional areas of materials of different density, and record the peak air gap for each area.

11.3.8 Determine the average of the peak air gaps determined on all areas. This is the optimum air gap. Use the optimum air gap for establishing the calibration curve for the air-gap method, and for all determinations of density by the air-gap method.

11.4 *Procedure*:

11.4.1 Standardize the instrument.

11.4.2 Select a test location where the gage in test position will be at least 12 in. (300 mm) away from any vertical projection. Plan sufficient area to accommodate the gage and cradle.

11.4.3 Prepare the test site in the following manner:

11.4.3.1 Remove all loose and disturbed material, and additional material as necessary to expose the top of the material to be tested. (See Note 8.)

11.4.3.2 Prepare a horizontal area, sufficient in size to accommodate the gage and cradle, by planing the area to a smooth condition so as to obtain maximum contact between the gage and material being tested.

11.4.3.3 The maximum void beneath the gage shall not exceed approximately ⅛ in. (3 mm). Use native fines or fine sand to fill these voids and smooth the surface with a rigid plate or other suitable tool.

NOTE 12—The air-gap method requires taking one or more readings in both the backscatter position and the air-gap position. The placement of the gage on the surface of the material to be tested is critical to the successful determination of density. The optimum condition is total contact between the bottom surface of the gage and the surface of the material being tested. This is not possible in all cases and to correct surface irregularities, use of sand or similar material as a filler is necessary. The depth of the filler should not exceed approximately ⅛ in. (3 mm) and the total area filled should not exceed 10 % of the bottom area of the gage. Several trial seatings may be required to achieve these conditions.

11.4.4 Proceed with the test in the following manner:

11.4.4.1 Seat the gage firmly.

11.4.4.2 Keep all other radioactive sources away from the gage to avoid affecting the measurement so as not to affect the readings.

11.4.4.3 Secure and record one or more readings for the normal measurement period in the backscatter position.

11.4.4.4 Place the cradle, set at optimum air gap, on the test site, and place the gage on the cradle so that the gage is directly over the same site used for backscatter reading. When a direct-transmission type gage is used, set the probe in the retracted or backscatter position for this reading.

11.4.4.5 Take the same number of readings for the normal measurement period in the air-gap position as in the

backscatter position (11.4.4.3).

11.4.4.6 Determine the air-gap ratio by dividing counts per minute obtained in the airgap position (11.4.4.5) by counts per minute obtained in backscatter position (11.4.4.3).

11.4.4.7 Determine the in-place wet density by use of the applicable calibration curve previously established.

NOTE 13—The air-gap ratio may be determined by dividing counts per minute obtained in the backscatter position by counts per minute obtained in the air-gap position or *vice versa*. Whichever ratio is used, a calibration curve using the same ratio must also be used.

12. Determination of Dry Density

12.1 To obtain dry density, use one of the following alternative methods:

12.1.1 If the water content is determined by nuclear methods, Test Method D 3017, subtract the pounds per cubic foot (kg/m^3) of moisture from the pounds per cubic foot (kg/m^3) of wet density, and obtain dry density in pounds per cubic foot (kg/m^3).

12.1.2 If the water content is determined by other methods, such as oven drying, Method D 2216, carbide method, etc., and is in the form of percent, proceed as follows:

$$\rho_d = [\rho_m/(w + 100)] \times 100 \quad (4)$$

where:

ρ_d = dry density, lb/ft^3 (kg/m^3),
ρ_m = wet density, lb/ft^3 (kg/m^3), and
w = percent moisture in the specimen.

13. Report

13.1 The report shall include the following:

13.1.1 Location,

13.1.2 Elevation of surface,

13.1.3 Visual description of material,

13.1.4 Identification of test equipment (make, model, and serial number),

13.1.5 N_o, average of the past four values of N_s taken for prior usage,

13.1.6 N_s, value of the current standardization check (8.3) on the reference standard (7.5), and the method and date of standardization,

13.1.7 Count rate for each reading,

13.1.8 Count ratio,

13.1.9 Wet density.

NOTE 14—The count rate for each reading (13.1.7) and the count ratio (13.1.8) may be omitted from the report for instruments that have built-in provisions to take the ratio, compute the in-place wet density, and display it to the operator automatically.

14. Precision and Accuracy

14.1 The precision and accuracy of this standard has not been determined. No methods are available that provide absolute values of the density of soil or soil-aggregate mixtures in place against which these methods can be compared. The variability of soil does not permit duplication of test results for obtaining a meaningful statistical evaluation. Accuracy is a function of the care exercised in performing the calibrations and steps of the test and of the variability of the material being tested.

APPENDIX

X1. NOTES ON THE NUCLEAR TEST

X1.1 The equipment used in this method is of the surface type as opposed to that designed for use in deep borings. In general, and neglecting the associated electronics, this equipment consists of three principal elements: (*1*) a nuclear source emitting gamma rays, (*2*) a detector sensitive to these rays as they are modified by passing through the material being tested, and (*3*) a counter or scaler with provisions for automatic and precise timing, for determining the rate at which the modified gamma rays arrive at the detector. While rate meters are suitable, in principle, scalers are commonly used. In general, any source of gamma rays that are sufficiently numerous and properly energetic can be used in measuring the density of soil and soil-aggregate. Source stability with time, in terms of half-life, is an important design consideration and the sources most commonly used are cesium-137 and radium-226. The two detectors most commonly used are gas-filled tubes of the Geiger-Müller type and scintillation crystals, usually of sodium-iodide. Detectors of the latter type offer the potential of electronically varying the range of energies of the gamma rays that are counted. With detectors of the Geiger-Müller type, this range is fixed in the design. For most available equipment, the source-detector geometry is fixed for backscatter gages and is adjustable to various preselected depths of direct transmission gages.

X1.2 Measurements are made using gamma rays that largely reflect at reduced energy by scattering in, or by, direct transmission through the material under test. In backscatter, the rays are emitted into the material from near its surface and some are deflected at reduced energy back to the detector, largely by Compton scattering. In direct transmission the source or detector is inserted in the test materials and, in contrast to the backscatter method, some of the emitted and unshielded rays can presumably follow a straight-line path to the detector. In either source-detector arrangement, the number of rays reaching the detector is, over-all, a nonlinear function of the density of the material being tested. For the usual range of soil and soil-aggregate densities the relationship is such that the higher the density of a given material, the lower the count rate.

X1.3 The determination of density by the nuclear means of this method is indirect. To date no theoretical approach has been developed that predicts the count rate for given equipment, geometry, material, and density. As a result, the relationsip between material density and nuclear-count rate is determined by correlation tests of materials at known

average densities. Individual equipment manufacturers supply a calibration curve with each set of their equipment. It has been found that these curves do not necessarily hold for all soils and soil-aggregates because of differences in chemical composition. Apparent variations in calibration may also be induced by differences in seating, in background count, and other test variations. Because of these considerations, provisions are included in this method for checking for variations or changes. Different approaches may be used in checking calibration and those in more general use are given. For good practice, these calibration procedures should be followed with newly purchased equipment and with major component replacements of in-service equipment.

X1.4 The density determined by this method is the wet or total density. It should be noted that the volume of soil or soil-aggregated represented in the measurements is indeterminate and will vary with the source-detector geometry of the equipment used and with the characteristics of the material tested. In general, and with all other conditions constant, the more dense the material, the smaller the volume involved in the measurement. The density so determined is not necessarily the average density within the volume involved in the measurement. Although for the usual surface backscatter test equipment and materials the gages are influenced by 6 to 7 in. (150 to 175 mm) of material, the top 1 in. (25 mm) of the material determines about one half of the measured count rate with the result that the observed density is largely determined by the density of the upper layers. For usual density conditions, the total count is largely determined by the upper 3 to 4 in. (75 to 100 mm) of soils and soil-aggregates. Where these materials are of uniform density, this characteristic of this method is of no effect. With direct-transmission gages the effect of vertical density variations may be eliminated. Other problems, however, can be introduced in the mechanics of inserting the source or the detector.

X1.5 The number of gamma rays emitted from a given source over a given time period are statistically random and follow a Poisson distribution. Because of this, the actual number of modified rays that are detected and counted in the density-measuring process should be sufficiently large to minimize the probability that the observed count reflects unacceptable variations. This is reflected in the standard deviation which is the square root of the total count. The over-all system accuracy in determining densities is also statistical in nature and appears to vary with the equipment used, the test conditions of laboratory *versus* field, as well as with materials and operators. Because of these variables, it is not possible to give precise numbers for system accuracy and precision of these methods. It is believed, however, that if the procedures herein are carefully followed, the standard deviation of the nuclear measured values, in terms of accuracy, will not be greater than on the order of some 3 lb/ft^3 (50 kg/m^3). In terms of precision or repeatability, determined without moving the test equipment, this should not be greater than on the order of 1 lb/ft^3 (20 kg/m^3).

X1.6 One of the most commonly used sources, cesium-137, is man made and as such its use is regulated by the Federal Government through the Atomic Energy Commission as well as by some state and local governments. Because radium is a naturally occurring material, its use is not now regulated by the Federal Government but is by some state and local governments. Among others, the objectives of these regulations are the use of radioactive materials in a manner safe to the operator and all others. Attention is directed to Section 6, Safety Precaution.

X1.7 The in-place nuclear density tests of this method offer several advantages over the older conventional methods (sand-cone, rubber-balloon, etc.), particularly in tests performed for the continuing control of construction. Among these, perhaps the principal advantage is the relative ease with which the test can be performed, thus freeing the operator from the physical tasks of digging holes and collecting and weighing bulky samples. However, it sacrifices the opportunity to examine the soil in depth. If information is sought on in-place densities only, ann test determinations of maximum density are not involved, many more tests can be performed per day than by the older methods. In addition, apparently erratic measurements can be immediately detected and checked since the nuclear tests are more nearly nondestructive. These advantages accure to organizations that are engaged in density measurements on a more or less continuous basis. Organizations that make infrequent or occasional density determinations may find that the advantages of the nuclear method can be offset by maintenance and start-up considerations such as periodically charging batteries, maintaining radiation exposure records, etc.

The American Society for Testing and Materials takes no position respecting the validity of any patent rights asserted in connection with any item mentioned in this standard. Users of this standard are expressly advised that determination of the validity of any such patent rights, and the risk of infringement of such rights, are entirely their own responsibility.

This standard is subject to revision at any time by the responsible technical committee and must be reviewed every five years and if not revised, either reapproved or withdrawn. Your comments are invited either for revision of this standard or for additional standards and should be addressed to ASTM Headquarters. Your comments will receive careful consideration at a meeting of the responsible technical committee, which you may attend. If you feel that your comments have not received a fair hearing you should make your views known to the ASTM Committee on Standards, 1916 Race St., Philadelphia, PA 19103.

Designation: D 3017 – 88

Standard Test Method for Water Content of Soil and Rock in Place by Nuclear Methods (Shallow Depth)[1]

This standard is issued under the fixed designation D 3017; the number immediately following the designation indicates the year of original adoption or, in the case of revision, the year of last revision. A number in parentheses indicates the year of last reapproval. A superscript epsilon (ε) indicates an editorial change since the last revision or reapproval.

This standard has been approved for use by agencies of the Department of Defense. Consult the DoD Index of Specifications and Standards for the specific year of issue which has been adopted by the Department of Defense.

1. Scope

1.1 This test method covers the determination of water content of soil and rock by the thermalization or slowing of fast neutrons where the neutron source and the thermal neutron detector both remain at the surface.

1.2 The water content in mass per unit volume of the material under test is determined by comparing the detection rate of thermalized or slow neutrons with previously established calibration data.

1.3 The values stated in SI units are to be regarded as the standard. The inch-pound equivalents may be approximate.

1.3.1 It is common practice in the engineering profession to concurrently use pounds to represent both a unit of mass (lbm) and of force (lbf). This implicitly combines two systems of units, that is, the absolute system and the gravitational system. This standard has been written using the absolute system for water content (kilograms per cubic metre) in SI units. Conversion to the gravitational system of unit weight in lbf/ft^3 may be made by multiplying by 0.06243 or in kN/m^3 by multiplying by 9.807. The recording of water content in pound-force per cubic foot should not be regarded as non-conformance with this standard although the use is scientifically incorrect.

1.4 *This standard may involve hazardous materials, operations, and equipment. This standard does not purport to address all of the safety problems associated with its use. It is the responsibility of the user of this standard to establish appropriate safety and health practices and determine the applicability of regulatory limitations prior to use.*

2. Referenced Documents

2.1 *ASTM Standards:*

D 1556 Test Method for Density of Soil in Place by the Sand-Cone Method[2]

D 2167 Test Method for Density and Unit Weight of Soil in Place by the Rubber Balloon Method[2]

D 2216 Method for Laboratory Determination of Water (Moisture) Content of Soil, Rock, and Soil-Aggregate Mixtures[2]

D 2922 Test Methods for Density of Soil and Soil Aggregate and Rock in Place by Nuclear Methods (Shallow Depth)[2]

D 2937 Test Method for Density of Soil in Place by the Drive-Cylinder Method[2]

D 4643 Test Method for Determination of Water (Moisture) Content of Soil by the Microwave Oven Method[2]

D 4718 Practice for Correction of Unit Weight and Water Content for Soils Containing Oversize Particles[2]

3. Significance and Use

3.1 The test method described is useful as a rapid, nondestructive technique for the in-place determination of water content of soil and rock.

3.2 The test method is used for quality control and acceptance testing of compacted soil and rock for construction and for research and development. The non-destructive nature allows repetitive measurements at a single test location and statistical analysis of the results.

3.3 The fundamental assumptions inherent in the test method are that the hydrogen present is in the form of water as defined by Method D 2216, and that the material under test is homogeneous.

3.4 Test results may be affected by chemical composition, sample heterogeneity, and, to a lesser degree, material density and the surface texture of the material being tested. The technique also exhibits spatial bias in that the apparatus is more sensitive to water contained in the material in close proximity to the surface and less sensitive to water at deeper levels.

4. Interferences

4.1 The chemical composition of the sample may dramatically affect the measurement and adjustments may be necessary. Hydrogen in forms other than water, as defined by Method D 2216, and carbon will cause measurements in excess of the true value. Some chemical elements such as boron, chlorine, and minute quantities of cadmium will cause measurements lower than the true value.

4.2 The water content determined by this test method is not necessarily the average water within the volume of the sample involved in the measurement. The measurement is heavily influenced by the water content of the material closest to the surface. The volume of soil and rock represented in the measurement is indeterminate and will vary with the water content of the material. In general, the greater

[1] This test method is under the jurisdiction of ASTM Committee D-18 on Soil and Rock and is the direct responsibility of Subcommittee D18.08 on Special and Construction Control Tests.

Current edition approved May 27, 1988. Published July 1988. Originally published as D 3017 – 72. Last previous edition D 3017 – 78.

[2] *Annual Book of ASTM Standards*, Vol 04.08.

the water content of the material, the smaller the volume involved in the measurement. At 160 kg/m^3 (10 lbf/ft^3), approximately 50 % of the typical measurement results from the water content of the upper 50 to 75 mm (2 to 3 in.).

4.2.1 If samples of the measured material are to be taken for purposes of correlation with other test methods or rock correction, the volume measured can be approximated by a 200-mm (8 in.) diameter cylinder located directly under the center line of the fast neutron source and thermal neutron detector. The height of the cylinder to be excavated is approximated by:

Moisture Content		Cylinder Height		Volume	
kg/m^3	lbf/ft^3	mm	in.	m^3	ft^3
80	5	250	10	0.0079	0.29
160	10	200	8	0.0063	0.23
240	15	150	6	0.0047	0.17
320	20	125	5	0.0039	0.15
400	25	112	4.5	0.0035	0.13
480	30	100	4	0.0031	0.12

NOTE 1—The volume of field compacted material sampled by the test can effectively be increased by repeating the test at immediately adjacent (vertically or horizontally) locations and averaging the results.

4.3 Other neutron sources must not be within 8 m (25 ft) of equipment in operation.

5. Apparatus

5.1 While exact details of construction of the apparatus may vary, the system shall consist of:

5.1.1 *Fast Neutron Source*—A sealed mixture of a radioactive material such as americium or radium and a target material such as beryllium.

5.1.2 *Slow Neutron Detector*—Any type of slow neutron detector such as boron trifluoride or helium-3 proportional counter.

5.1.3 *Readout Device*—A suitably timed scaler(s). Usually the readout device will contain the high-voltage supply necessary to operate the detector, and low-voltage power supply to operate the readout and accessory devices.

5.1.4 *Housing*—The source, detector, readout device, and power supply shall be in housings of rugged construction which shall be water and dust resistant.

5.1.5 *Reference Standard*—A block of hydrogeneous material for checking equipment operation and to establish conditions for a reproducible count rate.

5.1.6 *Site Preparation Device*—A steel plate, straightedge, or other suitable leveling tools which may be used to plane the test site to the required smoothness.

5.2 Calibrate apparatus in accordance with Annex A1.

5.3 Determine the precision of the apparatus in accordance with Annex A2.

6. Hazards

6.1 This equipment utilizes radioactive materials which may be hazardous to the health of the users unless proper precautions are taken.

6.2 Effective operator instruction together with routine safety procedures such as source leak tests, recording and evaluation of film badge data, use of survey meters, etc., are a recommended part of the operation of equipment of this type.

7. Standardization

7.1 All nuclear water content instruments are subject to long-term aging of the radioactive source, detectors, and electronic systems, which may change the relationship between count rate and water content. To offset this aging, instruments are calibrated as a ratio of the measurement count rate to a count rate made on a reference standard. The reference count rate should be in the same or higher order of magnitude than the range of measurement count rates over the useful water range of the equipment.

7.2 Standardization of equipment on the reference standard is required at the start of each day's use and a permanent record of these data shall be retained. The standardization shall be performed with the equipment located at least 8 m (25 ft) away from other gages and clear of large masses of water or other items which may affect the gage readings.

7.2.1 Turn on the instrument and allow for stabilization in accordance with the manufacturer's recommendations. If the instrument is to be used either continuously or intermittently during the day, it is generally best to leave it in the "power on" condition to prevent having to repeat the stabilization. This will provide more stable, consistent results.

7.2.2 Using the reference standard take at least four repetitive readings at the normal measurement period and obtain the mean. If available on the instrument, one measurement at a period of four or more times the normal period is acceptable. This constitutes one standardization check.

7.2.3 If the value obtained above is within the limits stated below, the equipment is considered to be in satisfactory condition and the value may be used to determine the count ratios for the day of use. If the value obtained is outside these limits, another standardization check should be made. If the second standardization check is within the limits, the equipment may be used, but if it also fails the test, the equipment shall be adjusted or repaired as recommended by the manufacturer.

$$N_s \leq N_o + \frac{2.0\sqrt{N_o}}{\sqrt{F}} \quad (1)$$

and

$$N_s \geq N_o - \frac{2.0\sqrt{N_o}}{\sqrt{F}} \quad (2)$$

where:

N_s = value of current standardization check (7.2.2) on the reference standard,

N_o = average of the past four values of N_s taken for prior usage, and

F = value of prescale (A2.2.1).

7.3 The value of N_s will be used to determine the count ratios for the current day's use of the equipment. If, for any reason, measured water content becomes suspect during the day's use, perform another standardization.

8. Procedure

8.1 Standardize the instrument (Section 7).

8.2 Select a location for test where the instrument in test position will be at least 250 mm (10 in.) away from any vertical projection.

8.3 Prepare the test site in the following manner:

8.3.1 Remove all loose and disturbed material, and remove additional material as necessary to reach the top of the vertical interval to be tested. Surface drying and the spatial bias should be considered in determining the depth at which the instrument is to be seated.

8.3.2 Prepare a horizontal area, sufficient in size to accommodate the instrument, by planing to a smooth condition so as to obtain maximum contact between the instrument and material being tested. If the instrument base is to be placed below the surrounding surface, the horizontal area shall be at least twice the area of the base of the instrument. If the depression is greater than 25 mm (1 in.), the condition in 8.2 must be met by clearing a larger area.

8.3.3 The placement of the instrument on the surface of the material to be tested is critical to the successful determination of water. The optimum condition is total contact between the bottom surface of the instrument and the surface of the material being tested. The maximum void beneath the instrument shall not exceed approximately 3 mm (⅛ in.). Use native fines of similar water content or dry quartz sand to fill voids and level the excess with a rigid plate or other suitable tool. The total area filled shall not exceed 10 % of the bottom area of the instrument.

8.4 Proceed with the test in the following manner:

8.4.1 Seat the instrument firmly, place the source in the proper position and take a count for the normal measurement period.

8.4.2 Determine the ratio of the reading to the standard count (Section 7). From this ratio and the calibration and adjustment data, determine the in-place water content per unit volume (Note 2).

NOTE 2—Some instruments have built-in provisions to compute the ratio, the water content per unit volume with adjustments, the dry density, and the water content in percent of dry density (or dry unit weight).

8.5 If the volume tested as defined in 4.2.1 is insufficient for the size of rock contained in the soil (refer to Test Method D 4718), take additional tests at adjacent locations and average the results (Note 3).

NOTE 3—The water content value obtained should be compared to other water contents obtained for similar soils and conditions. The presence of a large rock particle or void in the soil being tested may give an unrepresentative value of water content. If the value is unusually high or low, another determination of water content should be performed. To avoid preparation of another test site, the gage may be repositioned (such as rotating the gage 90°) at the original site.

9. Calculation

9.1 Calculate the water content, w, in percent of dry density (or dry unit weight) of soil as follows:

$$w = \frac{M_m \times 100}{\rho_d} \quad (3)$$

or

$$w = \frac{M_m \times 100}{\rho - M_m} \quad (4)$$

where:

w = water content, percent of dry density,
M_m = water content, kg/m^3 (lbf/ft^3),
ρ_d = dry density of soil (kg/m^3) or dry unit weight (lbf/ft^3), and
ρ = wet (total) density of soil (kg/m^3) or wet unit weight (lbf/ft^3).

10. Report

10.1 The report shall include the following:

10.1.1 Make, model, and serial number of the test device,

10.1.2 Standard count and adjustment data for the date of the tests,

10.1.3 Name of the operator,

10.1.4 Test site identification,

10.1.5 Visual description of material tested,

10.1.6 Count rate for each reading, if applicable,

10.1.7 Water content in kg/m^3 or lbf/ft^3,

10.1.8 Wet and dry densities in kg/m^3 or unit weights in lbf/ft^3,

10.1.9 Water content in percent of dry density or dry unit weight.

11. Precision and Bias

11.1 The precision and bias of this test method has not been determined. While the instrument precision (repeatability on the same sample) of 4 kg/m^3 (0.25 lbf/ft^3) is required and the procedure provides a means of removing the bias, no methods are available that provide sufficiently accurate values of the water content of in-place soil and rock against which the precision and bias for the procedure and operator variance can be determined.

ANNEXES

(Mandatory Information)

A1. CALIBRATION

A1.1 *Calibration Curves*—Calibration curves, tables, or equations shall be established or verified once each year by determining by test the nuclear count rate of at least two samples of different known water content. This data may be plotted or equations determined to create tables or computer programs for conversion of count data to water content. The method and test procedures used in obtaining the count rate (or ratio as defined in Section 7) to establish the calibration relationship must be the same as those used for measuring the water content of the material to be tested. The water content of materials used to establish the calibration must vary through a range to include the water content of

materials to be tested and be in the density range of 1600 to 2240 kg/m^3 (100 to 140 lbf/ft^3). Due to the effect of chemical composition, the calibration supplied by the manufacturer with the apparatus will not be applicable to all materials. It shall be accurate for mixes of silica sand and water; therefore, the calibration must be checked and adjusted, if necessary, in accordance with A1.3.

A1.2 *Calibration Standards*—Calibration standards may be established using any of the following methods. Prepared containers or standards must be large enough to not change the observed count rate (or ratio as defined in Section 7) if made larger in any dimension.

NOTE A1.1—Dimensions of approximately 610 mm long by 460 mm wide by 360 mm deep (approximately 24 by 18 by 14 in.) have proven satisfactory.

A1.2.1 Prepare a homogeneous standard of hydrogenous materials having an equivalent water content determined by comparison (using a nuclear instrument) with a saturated silica sand standard prepared in accordance with A1.2.2. A metallic density standard as defined in Test Methods D 2922 is a convenient zero water content standard.

A1.2.2 Prepare containers of compacted material with a percent water content determined by oven dry (Method D 2216) and a wet density calculated from the mass of the material and the inside dimensions of the container. The water content may be calculated as follows:

$$M_m = \frac{\rho \times w}{100 + w} \qquad \text{(A1.1)}$$

where:

M_m = water content, kg/m^3 or lbf/ft^3,
w = water content, percent of dry mass, and
ρ = wet (total) density, kg/m^3 or lbf/ft^3.

A1.2.3 Where neither of the previous calibration standards are available, the instrument may be calibrated by using a minimum of four selected test sites in an area of a compaction project where a homogenous material has been placed at several different water contents. The test sites shall represent the range of water contents over which the calibration is to be used. At least four replicate nuclear measurements shall be made at each test site. The density at each site shall be measured by making four closely spaced determinations with calibrated equipment in accordance with Test Methods D 2922, Test Method D 1566, Test Method D 2167, or Test Method D 2937. The water content of each of the density tests shall be determined by Method D 2216. Use the mean value of the replicate readings as the calibration point value for each site.

A1.3 *Calibration Adjustments:*

A1.3.1 The calibration of newly acquired or repaired instruments shall be verified and adjusted prior to use. Calibration curves shall be checked prior to performing tests on materials that are distinctly different from material types previously used in obtaining or adjusting the calibration. Sample materials may be selected by either A1.3.1.1 or A1.3.1.2. The amount of water shall be within ±2 % of the water content established as optimum for compaction. Determine the water content in kg/m^3 or lbf/ft^3 by Eq. A1.1. A microwave oven or direct heater may be utilized for drying materials which are not sensitive to temperature, in addition to the methods listed in A1.2.3. A minimum of four comparisons is required and the mean of the observed differences used as the correction factor.

A1.3.1.1 Container(s) of compacted material taken from the test site may be prepared in accordance with A1.2.2.

A1.3.1.2 Test site(s) on the compacted material may be selected in accordance with A1.2.3.

A1.3.2 The method and test procedures used in obtaining the count rate (or ratio as defined in Section 7) to establish the error must be the same as those used for measuring the water content of the material to be tested.

A1.3.3 The mean value of the difference between the moisture content of the test samples as determined in A1.3.1.1 or A1.3.1.2 and the values measured with the instrument shall be used as a correction to measurements made in the field. Some instruments utilizing a microprocessor may have provision to input a correction factor that is established by the relative values of water content as a percentage of dry density, thus eliminating the need to determine the difference in mass units of water.

A2. DETERMINING PRECISION OF APPARATUS

A2.1 The precision of the apparatus at a water content of 160 kg/m^3 (10 lbf/ft^3) shall be better than 4 kg/m^3 (0.25 lbf/ft^3) at the manufacturer's stated period of time for the measurement (Note A2.1). Other timing periods may be available (usually multiples of four of the normal period) which may be used where higher or lower precisions are desired for statistical purposes. The precision shall be determined by the procedure defined in 5.2.1 or 5.2.2.

NOTE A2.1—While 1 min is the usual timing period and may be used for the comparison of various apparatus, the intent of the test method is to require a measurement period that produces the stated precision for all acceptance testing.

A2.2 The precision of the apparatus is determined from the slope of the calibration response and the statistical deviation of the count (detected neutrons) for the period of measurement, as follows:

$$P = \frac{\sigma}{S}$$

where:

P = apparatus precision in water content (kg/m^3 or lbf/ft^3),
σ = standard deviation in counts per measurement period, and
S = slope in change in counts per measurement period divided by the change in water content (kg/m^3 or lbf/ft^3).

A2.2.1 The count per measurement period shall be the total number of thermal neutrons detected during the timed period. The displayed value must be corrected for any prescaling which is built into the apparatus. The prescale value (F) is a divisor which reduces the actual value for the purpose of display. The manufacturer will supply this value if other than 1.0.

A2.2.2 The standard deviation in counts per measurement period shall be obtained as follows:

$$\sigma = \frac{\sqrt{C}}{\sqrt{F}}$$

where:

σ = standard deviation in counts per measurement period,
C = counts per measurement period (before prescale correction) at a water content of 160 kg/m^3 (10 lbf/ft^3), and
F = value of prescale (A2.2.1).

A2.2.3 The counts per measurement period (before prescale correction) shall be obtained form the calibration curve, tables or equation.

A2.2.4 The slope of calibration response in counts per measurement period (before prescale correction) at a water content of 160 kg/m^3 (10 lbf/ft^3) shall be determined from the calibration curve, tables, or equation.

A2.3 The precision shall be computed by determining the standard deviation of at least 20 repetitive measurements (instrument not moved after the first measurement) on material having a water content of 130 to 190 kg/m^3 (8.1 to 11.9 lbf/ft^3). In order to perform this procedure, the resolution of the count display, calibration response, or other method of displaying water content must be equal to or better than ±1 kg/m^3 or 0.1 lbf/ft^3.

The American Society for Testing and Materials takes no position respecting the validity of any patent rights asserted in connection with any item mentioned in this standard. Users of this standard are expressly advised that determination of the validity of any such patent rights, and the risk of infringement of such rights, are entirely their own responsibility.

This standard is subject to revision at any time by the responsible technical committee and must be reviewed every five years and if not revised, either reapproved or withdrawn. Your comments are invited either for revision of this standard or for additional standards and should be addressed to ASTM Headquarters. Your comments will receive careful consideration at a meeting of the responsible technical committee, which you may attend. If you feel that your comments have not received a fair hearing you should make your views known to the ASTM Committee on Standards, 1916 Race St., Philadelphia, PA 19103.

FIBERGLASS-REINFORCED PLYWOOD BOXES

There were two means of obtaining fiber-glass-reinforced plywood (FRP) boxes as transuranic (TRU) waste containers at the Laboratory. Standard 4'x4'x8' boxes were ordered from stock; these boxes were designed and constructed at the Rocky Flats Plant (design specifications are attached, interior box construction varied). Nonstandard FRP boxes were designed and constructed on site to contain odd-shaped or oversized waste. A review of 14 drawings (1978) for construction of nonstandard FRP boxes (i.e., 4'x4'x12', 4'x8'x10', 5'x8'x10', 6'x7'x12', 6'x8'x16', 8'x8'x12') indicates that the following parameters were common specifications for FRP boxes constructed on site:

- Box sides, bottoms, and tops were constructed of 3/4" plywood with internal and/or external 2"x4" or 4"x4" S4S No. 2 construction grade seasoned lumber bracing;
- Joints were glued with a continuous bead of B.F. Goodrich PL-200 or equivalent construction adhesive and nailed together with 6-, 9-, 10-, and/or 12-penny nails depending on the location
- Boxes were labeled on a minimum of two sides
- A coat of fiberglass was applied to the box per Rockwell-International - Rocky Flats standard SX-207 or CMB11 Standard V-1010
- As necessary, 2"x4" or 4"x4" skids were placed on the bottom of the box to facilitate lifting.

The variations in the waste in the larger boxes necessitated nonstandard construction dimensions. Design drawings for larger boxes were not located, but construction techniques would have been similar. As-built drawings were not available.

Because 49 CFR 173.2a specifies that materials to be packaged will be assigned a hazard classification according to the highest level of hazard, the standard for packaging of radioactive materials takes precedence over those for packaging of hazardous waste. The Rocky Flats Plant standards indicate that the FRP boxes were designed to meet Department of Transportation (DOT) 7A standards - Specifications for Packagings for Class 7 (Radioactive) Materials, for transport in commerce. The design specifications referenced are still valid for Type A waste. DOT-approved containers for Type B waste (radiotoxicity of 0.002 for Pu238 or Pu239) are not available; however, the

Laboratory does not transport Type B waste on public access highways (in commerce) and therefore the transport of that waste is not subject to DOT regulations.

The hazardous component of the waste within the FRP boxes (lead) is regulated under DOT standards 49 CFR 172.101 as "Hazardous waste, solid" and is identified as a Class 9, Packing Group III material. Given these criteria, the requisite waste container is specified in 49 CFR 173.240 (Bulk packaging of certain low hazard solid materials); container requirements are "...(c)...sift-proof, non-DOT specification...closed bulk bins." 49 CFR 171.8 defines bulk packaging as "packaging...in which hazardous materials are loaded...and which has...(2) a maximum net mass of greater than 400 [kilograms] kg (882 pounds) and a maximum capacity greater than 450 [liters] L (119 gallons) as a receptacle for a solid..." Based on these regulatory guidelines and definitions, the DOT's only requirement for the RCRA-regulated (hazardous) components of the waste is that the container be sift-proof. The solid physical form of the lead and the design of the FRP containers described above, appears to satisfy this minimum requirement for the RCRA-regulated hazardous components in the waste.

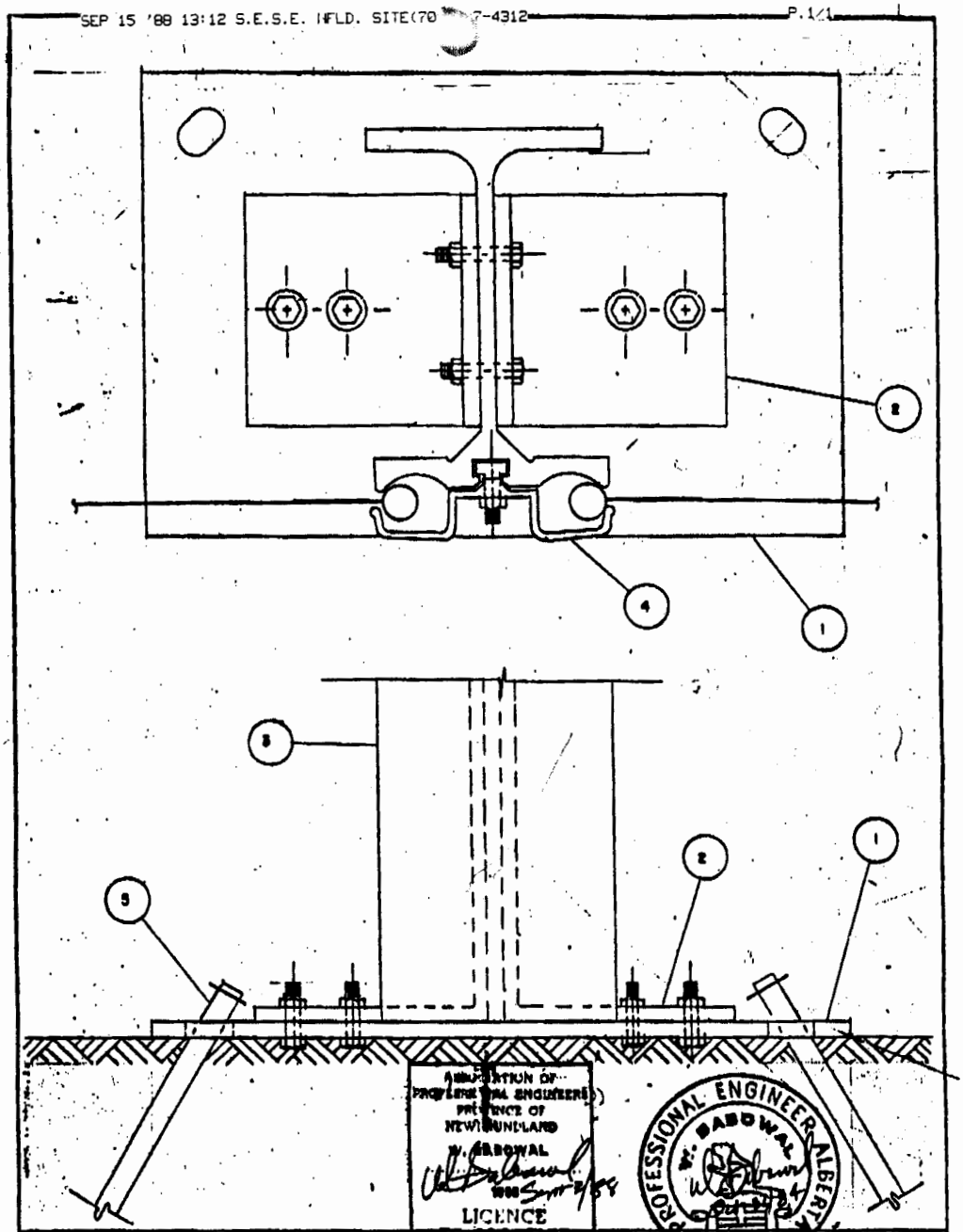

ITEM Nº	QUANT.	DESCRIPTION	PART Nº	WT./PC.
5		¾" Ø STEEL DRIFT PINS 3'-0" Lg.		
4		FABRIC RETAINER		
3		4"x 6" or 4"x 4" ALUM. I BEAM		
2		BASE ANGLE		
1		BASE PLATE		

SPRUNG INSTANT STRUCTURES : DATA SHEET

PART NAME	END USE
BASE DETAIL RE 30'-60' & 20m. STRUCTURES	

DESCRIPTION:	DIMENSIONAL	MATERIAL	ALLOY	DIE Nº	WT./PC.

SCALE	DATE	DRAWN	AUTHORIZED BY	PART Nº
N.T.S.	JULY 5, 1984	P. BOS		BASE-84-01

301		½" NYLON SPING			
207		STEEL DRIFT PIN ⅝" DIA.	1.42 Kg 3.1 lb	900 (3'-0")	1-3080
206		⅝" x 4" PARABOLT C/W WASHER			3-1580, 1620
205		⅜" x 2" SQ. HD. BOLT C/W NUT & WASHER			3-1200, 1280, 1260
204		⅜" x 1" SQ. HD. BOLT C/W NUT & WASHER			3-1160, 1280, 1260
203		½" x 4" BOLT C/W LOCK NUT			3-1400, 1540
202		½" x 2¼" BOLT C/W NUT & WASHER			3-1360, 1520, 1460
201		½" x 1¾" BOLT C/W NUT & WASHER			3-1340, 1520, 1460
120		83mm (3.25") SPREADER BAR AL., END	5.9 Kg 13 lb	2540 (8'-4")	1-2220
119		AL. CONE COVER	1.22 Kg 2.68 lb		1-2560
118		AL. CONE	3.5 Kg 7.7 lb		1-2660
117		AL. TOP SPLICE	1.5 Kg 3.3 lb		1-2820
116		AL. APEX KNEE	2.05 Kg 4.5 lb	787 (2'-7")	1-2760
115		AL. BEAM SPLICE	3.91 Kg 8.62 lb	914 (3'-0")	1-2880
114		83mm (3.25") AL. TT BAR MULTI	1.4 Kg 3.1 lb	457 (1'-6")	1-1920
113		83mm (3.25") AL. TT BAR	1.4 Kg 3.1 lb	457 (1'-6")	1-1900
112		83mm (3.25") AL. TT BAR	.47 Kg 1.1 lb	152 (6")	1-1880
111		83mm (3.25") SPREADER BAR AL., CENTER	6.36 Kg 14.02 lb	2743 (9'-0")	1-2240
110		152 x 102 x 10mm (6" x 4" x .375") AL. BASE ANGLE	.67 Kg 1.5 lb	102 (4")	1-3020
109		305 x 203 x 10mm (1'-0" x 8" x .375" AL. BASE PLATE	1.6 Kg 3.5 lb	203 (8")	1-2940
108		AL. BASE CAP	.77 Kg 1.71 lb	533 (1'-9")	1-1780
107		AL. TOP CAP	.8 Kg 1.8 lb	610 (2'-0")	1-1740
106		AL. CHANNEL END STRAIGHT	8.08 Kg 17.8 lb	5182 (17'-0")	1-1500
105		AL. CHANNEL CENTER STRAIGHT	8.24 Kg 18.2 lb	5282 (17'-4")	1-1460
104		AL. CHANNEL CURVE	8.24 Kg 18.2 lb	5282 (17'-4")	1-1460
103		102 x 157 mm (4" x 6") ALUM I BEAM END STRAIGHT	42.65 Kg 94 lb	5182 (17'-0")	1-1080
102		102 x 157 mm (4" x 6") ALUM I BEAM CENTER STRAIGHT	45.15 Kg 99.5 lb	5486 (18'-0")	1-1060
101		102 x 157 mm (4" x 6") ALUM I BEAM CURVE	48.39 Kg 106.6 lb	5880 (19'-3½")	1-1340
ITEM Nº	QUANT.	DESCRIPTION	WT./PC.	LENGTH	PART Nº

SPRUNG INSTANT STRUCTURES

15,240 (50'-0") STRUCTURAL ASSEMBLY

DRAWN | DATE | SCALE

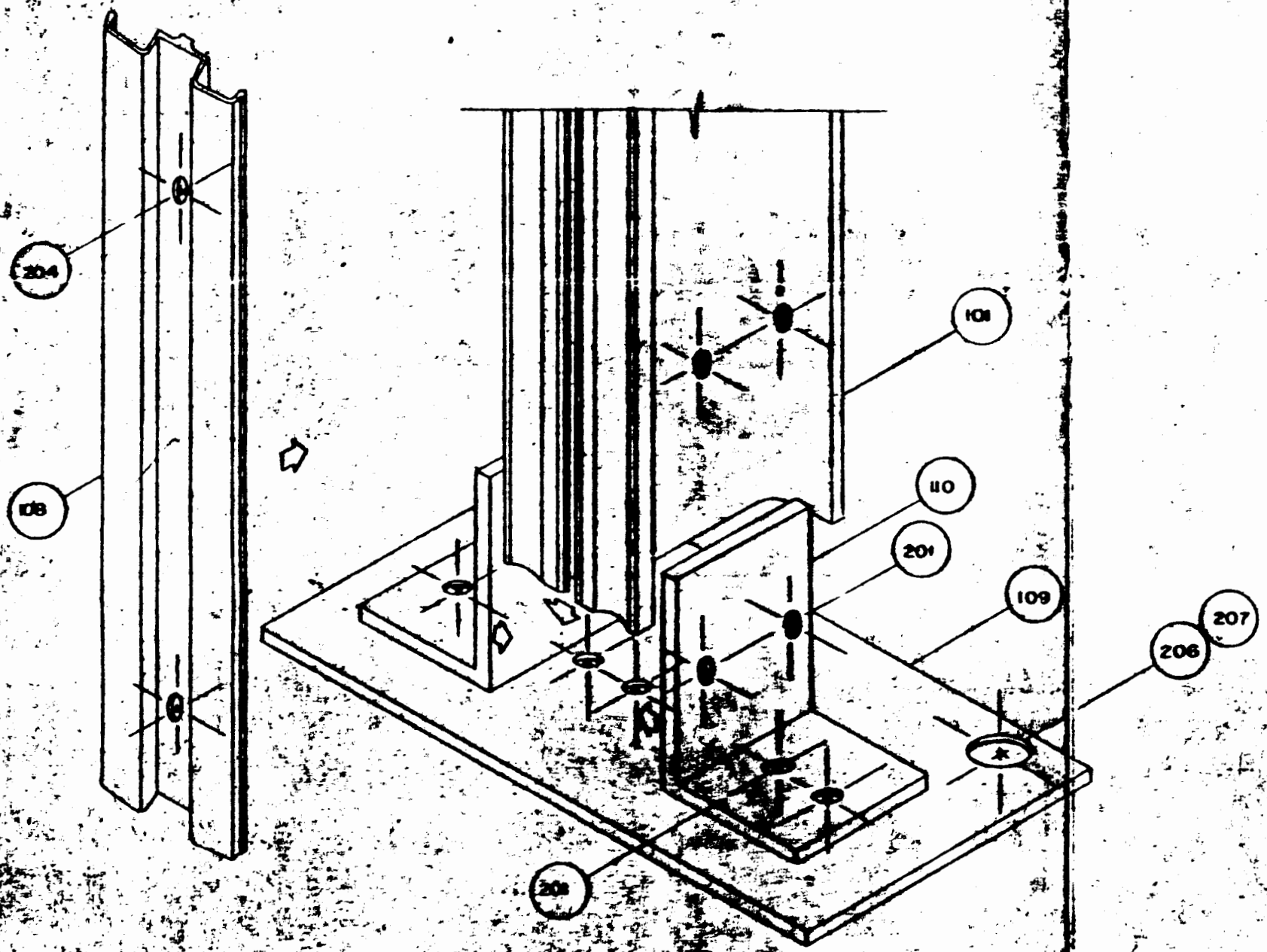

DETAIL A