General

LIBRARY COPY

LA-10300-M Vol. I
Manual

UC-907
Issued: May 1986
Revised: November 1993

Health and Environmental Chemistry: Analytical Techniques, Data Management, and Quality Assurance

Edited by Margaret A. Gautier

12442

Los Alamos
NATIONAL LABORATORY
Los Alamos, New Mexico 87545

CONTENTS

Preface vii

Abstract ix

Introduction GI-23

Document Control and Document Change GI-29

The page numbering convention used in this manual consists of the specific procedure number (shown at left in list below) followed by the page number for that procedure. Thus, R110-2 is page two of procedure R110. The right column in the list below gives each procedure's status or effective date.

Radiobioassay Chemistry Analytical Techniques

Radiobioassay Analytical Procedures

R100 Americium in Urine—Alkaline Earth Phosphate 02/93

R110 Americium and Plutonium in Fecal Samples—
A Screening Procedure 02/93

R120 Cesium-137 in Urine . . . . . Retired

R130 Gross Beta Activity . . . . . Retired

R150 Phosphorus-32 in Urine . . . . . Retired

R160 Polonium-210 in Urine . . . . . Retired

R170 Plutonium in Urine—Alkaline Earth Phosphate Procedure 05/93

R190 Plutonium in Urine—Rapid Method . . . . . Retired

R200 Plutonium in Fecal Samples—RAS 04/93

R210 Thorium in Urine—Colorimetric . . . . . Retired

R230 Tritium in Urine—Direct 09/92

R240 Tritium in Urine—Distillation ..... Retired

R250 Uranium—Delayed Neutron Counting ..... Retired

R260 Uranium in Urine—Anion Exchange and Radiometric ..... Retired

R261 Uranium (Isotopic) in Urine—Alkaline Earth Phosphate and Alpha Spectrometry 05/93

R270 Uranium in Urine—Anion Exchange and Colorimetric ..... Retired

R280 Uranium-238 Fluorometric ..... Retired

R290 Uranium in Urine—ICPMS 11/90

Radiotissue Chemistry Analytical Techniques

Radiotissue Analytical Procedures

RT100 Tissue Ashing, Sample Dissolution, Sample Aliquot Selection, and Tracer Addition for Anion Exchange Isolation of Radionuclides 05/92

RT200 Anion Exchange Isolation of Plutonium from Prepared Tissue Solutions 05/92

RT300 Anion Exchange Isolation of Americium from Prepared Tissue Solutions 02/93

Anion Exchange Isolation of Thorium from Prepared Tissue Solutions ..... In Progress

RT400 Anion Exchange Isolation of Uranium from Prepared Tissue Solutions 02/93

RT500 Electroplating Americium, Plutonium, Uranium, and Thorium 10/92

RT600 Alpha Spectrometry Measurement for Radionuclides of Americium 02/93

RT700 Alpha Spectrometry Measurement for Radionuclides of Plutonium 02/93

RT750 Alpha Spectrometry Measurement for Radionuclides of Thorium 04/93

RT800 Alpha Spectrometry Measurement for Radionuclides of Uranium 02/93

RT900 Measurement of Actinium in Tissue Samples—Gamma Spectroscopy 11/92

Appendix

ALPHA1 Computer Code 09/87

Industrial Hygiene Chemistry Analytical Techniques

Industrial Hygiene Analytical Procedures

IH100 Aliphatic Amines in Air . . . . . Retired

IH110 Anions by Ion Chromatography . . . . . Retired

IH120 Aromatic Amines in Air . . . . . Retired

IH130 Aromatic Amines—A Chemical Spot Test . . . . . Retired

IH135 Arsenic and Gallium on Air Filters—IENA . . . . . Retired

IH140 Asbestos Fibers in Air . . . . . Retired

IH150 Beryllium on Air Filters 05/93

IH155 Breathing Air 04/93

IH160 Cadmium in Urine—Flame AA . . . . . Retired

IH161 Cadmium in Urine—Flameless AA . . . . . Retired

IH170 Cholinesterase in Serum . . . . . Retired

IH180 N,N-Dimethylaminoazobenzene—A Chemical Spot Test . . . . . Retired

IH185 Ethanol in Air 09/93

IH190	Fluoride in Urine	Retired
IH200	Formaldehyde in Air—Alumina Tube Collection	Retired
IH210	Formaldehyde in Air—Impinger Collection	Retired
IH211	Formaldehyde in Air, Water, or Solids	09/93
IH214	Halogens and Sulfur in Liquids—NAA	Retired
IH220	Metals on Air Filters—NIOSH PAT Samples	03/93
IH230	Mercury in Urine	Retired
IH240	Metals—General Procedure	Retired
IH250	Aromatic Nitro-Compounds—A Chemical Spot Test	Retired
IH260	Organic Solvents in Air—General Procedure	09/93
IH270	Organic Solvents—NIOSH PAT Samples	09/93
IH273	Perchlorate in Waters—Colorimetric	09/92
IH274	Petroleum Hydrocarbons, Total Recoverable in Soil	04/93
IH275	Petroleum Hydrocarbons, Total Recoverable in Water	04/93
IH280	Phenol in Urine—Gas Chromatography	Retired
IH290	Phenol in Urine—HPLC	Retired
IH300	Phenol in Water—HPLC	Retired
IH310	Polychlorinated Biphenyls (PCBs) in Air	Retired
IH320	Polychlorinated Biphenyls (PCBs) in Oil	Retired
IH321	Polychlorinated Biphenyls (PCBs)—Screening by NAA	Retired
IH330	Polynuclear Aromatic Hydrocarbons in Air—HPLC	09/93
IH340	Polynuclear Aromatic Hydrocarbons in Air—GC	04/93
IH345	Thallium in Urine—ICPMS	10/90

	Trace Metals in Air Filters	In Progress
IH350	Trichloroacetic Acid in Urine	Retired

Instrument Procedures

IH800	Gas Chromatography and Mass Spectrometry—General Procedure	Retired
IH810	Infrared Spectroscopy—General Procedure	Retired

Environmental Chemistry Analytical Techniques

Environmental Analytical Procedures - Inorganic

Atomic Absorption

EI100	Arsenic in Water and Soil Extracts—Graphite Furnace AA	05/93
EI105	Barium in Water and Soil Extracts—Flame AA	09/92
EI110	Beryllium in Biological and Geological Matrices	In Progress
EI115	Cadmium, Copper, and Lead in Biological and Geological Matrices	In Progress
EI120	Cadmium in Water and Soil Extracts—Graphite Furnace AA	05/93
EI125	Calcium in Water and Soil Extracts—Flame AA	09/92
EI130	Chromium in Oil, Water, and Soil Extracts—Flame AA	09/92
EI135	Chromium in Water and Soil Extracts—Graphite Furnace AA	05/93
EI140	Copper in Water and Soil Extracts—Flame AA	09/92
EI145	Iron in Water and Soil Extracts—Flame AA	09/92
EI150	Lead in Water and Soil Extracts—Graphite Furnace AA	05/93

EI155	Lithium in Biological and Geological Matrices	In Progress
EI160	Magnesium in Water and Soil Extracts—Flame AA	09/92
EI165	Mercury in Water—Cold Vapor AA	In Progress
EI170	Nickel in Water and Soil Extracts—Flame AA	09/92
EI175	Potassium in Water and Soil Extracts—Flame AA	09/92
EI180	Runoff Samples for Mercury, Lead, and Beryllium	In Progress
EI185	Selenium in Water and Soil Extracts—Graphite Furnace AA	05/93
EI190	Silver in Water and Soil Extracts—Flame AA	09/92
EI195	Sodium in Water and Soil Extracts—Flame AA	09/92
EI200	Thallium on Filters—Graphite Furnace AA	05/93
EI205	Thallium in Water and Soil Extracts—Graphite Furnace AA	05/93
EI210	Zinc in Water and Soil Extracts—Flame AA	09/92

Inductively Coupled Plasma Atomic Emission and Mass Spectrometry

EI300	Barium in Soils—Acid Digestion and ICPAES	Retired
EI310	Elemental Scans of Water—ICPMS	In Progress
EI320	Extraction Procedure Toxicity (EPTOX) Metals—Acid Digestion and ICPAES	In Progress
EI330	Extraction Procedure Toxicity (EP Tox) Metals—ICPMS	In Progress
EI340	Metals in Water—ICPMS	In Progress
EI350	Trace Elements in Filters, Soil, Sludge, Urine, Leachates, Water, and Waste—ICPMS (EPA Method 200.8 and 6020)	In Progress
EI360	Trace Elements in Waters and Wastes—ICPMS (EPA Method 200.8)	In Progress

EI370	Trace Metals in Soils—Acid Digestion and ICPAES	In Progress

Ion Chromatography and Spectrophotometry

EI400	Anions in Water and Waste Water—Ion Chromatography	06/92
EI410	Boron in Natural and Geothermal Waters—Flow Injection	In Progress
EI420	Fluoride in Environmental Matrices	In Progress
EI430	Fluoride in Water—ISE	In Progress
EI440	Nitrate in Water—Cadmium Reduction UV-VIS Spectrophotometry	In Progress
EI450	Titanium—Colorimetric using Diantipyrylmethane	In Progress
EI460	Total Phosphate in Water—Ascorbic Acid	In Progress
EI470	Silicon—Heteropoly Blue Colorimetric	In Progress

Potentiometry

EI500	Fluorine in Water—Ion Selective Electrode	In Progress
EI510	Nitrate in Water—Ion Selective Electrode	In Progress
EI520	pH of Soil	10/91

Neutron Activation

EI630	Arsenic, Antimony, Tungsten and Molybdenum in Silicates—RENA	Retired
EI640	Bromine and Iodine in Geological Matrices—IENA	In Progress
EI650	Copper and Noble Metals in Geological Matrices—RTNA	In Progress
EI660	Selenium in Environmental Matrices—RTNA	In Progress

Miscellaneous

EI700	Carbonate Carbon in Geologicals by Gravimetric Analysis	In Progress
EI730	Mercury in Environmental Materials—Cold Vapor Gold Film Analyzer	Retired
EI735	Sample Preparation for Spectrochemical Analyses of Total Recoverable Elements (EPA Method 200.2)	12/90
EI740	Sulfur in Environmental Matrices—Combustion with Infrared Detection	In Progress
EI760	Total Hardness—Titrimetry	In Progress
EI770	Total Organic Carbon	In Progress
EI780	Total Organic Halides (TOX)	In Progress
EI790	Water (Bound and Unbound) in Geological Matrices—High Temperature Coulometry	Retired

Environmental Analytical Procedures - Organic

Herbicides

EO100	Herbicides in Soil: Solvent Extraction/Derivatization—GC/ECD	In Progress
EO110	Herbicides in Water: Solvent Extraction/Derivatization—GC/ECD	In Progress

High Explosive Residue

EO200	High Explosive Residue on Soil: Solvent Extraction—HPLC	In Progress
EO210	High Explosive Residue on Soil: Solvent Extraction—HPLC/MS	In Progress
EO220	High Explosive Residue in Water: Solvent Extraction—HPLC	In Progress
EO230	High Explosive Residue in Water: Solvent Extraction—HPLC/MS	In Progress

Pesticides

EO300	Pesticides in Soil: Solvent Extraction—GC/ECD	In Progress
EO310	Pesticides in Water: Solvent Extraction—GC/ECD	In Progress
EO320	Pesticides in Water: Open Tubular Solid Phase Extraction—GC/ECD	In Progress

Polychlorinated Biphenyls (PCBs)

EO400	Polychlorinated Biphenyls (PCBs) in Oil: Solvent Extraction—GC/ECD	03/93
EO410	Polychlorinated Biphenyls (PCBs) in Soil: Solvent Extraction—GC/ECD	03/93
EO420	Polychlorinated Biphenyls (PCBs) in Swipes: Solvent Extraction—GC/ECD	03/93
EO430	Polychlorinated Biphenyls (PCBs) in Water: Solvent Extraction—GC/ECD	03/93
EO440	Polychlorinated Biphenyls in Water: Open Tubular Solid Phase Extraction—GC/ECD	In Progress
EO450	Polychlorinated Biphenyls in Oil: Solvent Dilution/Sulfuric Acid Clean-up—GC/ECD	In Progress
EO460	Polychlorinated Biphenyls in Air: Solvent Extraction of Air Sampling Tubes—GC/ECD	In Progress

Semivolatile Organic Compounds

EO500	Semivolatile Organics in Solid Matrices: Solvent Extraction—GC/MS	05/93
EO510	Semivolatile Organic Compounds on Soil: Solvent Extraction—GC with GCMS Confirmation	In Progress
EO520	Semivolatile Organic Compounds on Soil and Water: Gel Permeation Clean-up—GPC	In Progress

EO530	Semivolatile Organics in Water Aqueous Matrices: Solvent Extraction—GC/MS	05/93
EO540	Semivolatile Organic Compounds in Water: Solvent Extraction—GC with GCMS Confirmation	In Progress

Volatile Organic Compounds

EO700	Volatile Organic Compounds: Thermal Desorption of Air Sampling Tubes—GC/MS	In Progress
EO710	Volatile Organic Compounds: Solvent Extraction of Charcoal Tubes—GC/MS	In Progress
EO720	Volatile Organic Compounds in Soil and Sediment: Capillary Column Technique—GC/MS (EPA SW846 Method 8260)	05/93
EO730	Volatile Organic Compounds in Water: Precision Dynatech Autosampler Capillary Column Technique—GC/MS (EPA SW846 Method 8260)	05/93

Environmental Analytical Procedures — Radiochemical

ER100	Gross Alpha and Beta Activity in Environmental Matrices—Gas-Flow Proportional Counting	04/92
ER110	Americium-241 in Environmental Matrices (Greater than 2-Gram Samples)—Alpha Spectrometry	02/93
ER120	Americium-241 in Environmental Matrices (Less than 2-Gram Samples)—Alpha Spectrometry	08/92
ER130	Gamma-Ray-Emitting Nuclides in Environmental Matrices—Instrumental Method	04/93
ER140	Qualitative Gamma-Ray Scan of Environmental Matrices	04/93
ER150	Gross Gamma in Environmental Matrices	06/93
ER160	Plutonium in Environmental Matrices—Alpha Spectrometry	04/93
ER165	Plutonium in Sediment (Kilogram Samples)	In Progress
ER170	Radium-226 in Geologicals—Gamma-Ray Spectrometry	04/91

ER180	Radium-226 in Water—Radon Emanation	04/93
ER190	Strontium-90 in Environmental Matrices	08/92
ER200	Thorium-230 in Geologicals—Alpha Spectrometry	05/91
ER210	Tritium in Environmental Matrices—Distillation Procedure	06/92
ER230	Uranium-235/Uranium-238 Ratio in Geologicals and Natural Waters—RTNA	Retired
ER240	Uranium in Air Filters—DNA	Retired
ER250	Uranium in Biological Matrices—DNA	Retired
ER260	Uranium in Geologicals—DNA	Retired
ER270	Uranium in Water—DNA	Retired
ER290	Total Uranium and $^{235}U/^{238}U$ Ratio in Water—ICPMS	02/91
ER300	Depleted Uranium in Soils—IENA	Retired

Mobile Laboratory Analytical Techniques

Mobile Laboratory Analytical Procedures—Organic

MLO274	Petroleum Hydrocarbons, Total Recoverable in Soil—Mobile Laboratory Method	04/93
MLO410	Polychlorinated Biphenyls (PCBs) in Soil—Mobile Laboratory Method	03/93
MLO500	Semivolatile Organics in Solid Matrices: Solvent Extraction-GC/MS—Mobile Laboratory Method	04/93
MLO510	Extraction of Semivolatile Organic Analytes in Solid Matrices for Analysis by GC/MS—Mobile Laboratory Method	04/93
MLO720	Volatile Organic Compounds in Soil Sediment—Mobile Laboratory Method	04/93

Mobile Laboratory Analytical Procedures—Radiochemical

MLR100	Gross Alpha/Beta Screening of Silicates— Mobile Laboratory Method	02/93
MLR200	Gross Gamma Screening of Silicates— Mobile Laboratory Method	02/93
MLR300	Gross Tritium Analysis of Silicates— Mobile Laboratory Method	02/93
MLR400	Gross Moisture Analysis of Silicates— Mobile Laboratory Method	02/93

Waste Water Chemistry Analytical Techniques

Waste Water Analytical Procedures - Inorganic

Atomic Absorption

WI100	Atomic Absorption Methods—Method 7000 (SW 846)	Retired
WI110	Mercury in Solid or Semisolid Waste— CVAA (EPA Method 7471)	11/90
WI120	Mercury in Leachates, Water, and Waste Water—CVAA	11/90

Colorimetry

WI200	Ammonia in Water and Waste Water—Flow Injection	Retired
WI210	Ammonia Nitrogen in Water and Waste Water—Auto Analyzer	Retired
WI220	Boron in Natural and Geothermal Waters—Flow Injection	Retired
WI230	Chemical Oxygen Demand in Water and Waste Water— Auto Analyzer or Manual	09/91
WI240	Chloride in Water and Waste Water—Flow Injection	Retired
WI250	Chromium VI in Water and Waste Water—Spectrophotometric	Retired
WI260	Chromium VI in Water and Waste Water—Flow Injection	08/91

WI270	Cyanide in Waste Water—Auto Analyzer	Retired
WI280	Nitrate in Water and Waste Water—Flow Injection	Retired
WI290	Nitrate Nitrogen in Water and Waste Water—Auto Analyzer	Retired
WI300	Nitrite Nitrogen in Water and Waste Water—Auto Analyzer	Retired
WI310	Nitrite Nitrogen in Water and Waste Water—Flow Injection	Retired
WI320	Phosphorus in Water and Waste Water—Auto Analyzer	01/92
WI330	Silica in Water and Waste Water—Spectrophotometric	Retired
WI340	Silica in Water and Waste Water—Flow Injection	08/91
WI350	Sulfate in Water and Waste Water—Flow Injection	Retired
WI360	Total Kjeldahl Nitrogen in Water and Waste Water	In Progress
WI370	Turbidity of Water and Waste Water—Nephelometric	Retired

Gravimetry

WI400	Total Dissolved Solids in Water and Wastewater	08/93
WI410	Total Suspended Solids in Water and Wastewater	08/93

Ion Chromatography

WI420	Calcium and Magnesium in Water and Waste Water—IC	Retired
WI425	Chloride and Sulfate in Water and Waste Water—IC	In Progress
WI428	Hardness of Water and Waste Water—Calculation	02/92
WI430	Sodium and Potassium in Water and Waste Water—IC	Retired
WI435	Sodium, Potassium, Calcium, and Magnesium by IC—Isocratic Determination with IONPAC CS10 Column	06/92

Potentiometry

WI440	Ammonia in Water and Waste Water—ISE	In Progress
WI450	Conductivity of Water, Wastewater, and Atmospheric Deposition	08/93
WI460	Fluoride in Water and Waste Water	08/91
WI468	pH of Organic Waste Materials	11/91
WI470	pH of Water, Waste Water, and Atmospheric Deposition	08/93
WI480	Residual Chlorine in Water—Amperometric Titration	03/93

Titrimetry

WI500	Alkalinity in Water and Waste Water	09/91
WI510	Chemical Oxygen Demand in Water and Waste Water—Titration	Retired
WI520	Halides in Waste Water and RCRA Waste	Retired
WI529	Sulfite in Water and Waste Water—Titrimetry	03/91
WI530	Total Cations in Water and Waste Water—Ion Exchange and Potentiometric Titration	08/91

Miscellaneous

WI600	Ash of Organic Waste Material	Retired
WI610	Corrosivity of Solution Toward Steel	03/93
WI620	EP Toxicity Extraction	Retired
WI630	Flash Point—Pensky-Martens Closed Cup Tester	02/92
WI640	Heat Capacity of Combustible Materials	02/92
WI650	Inorganic Toxicity Characteristic Leaching Procedure (TCLP)	12/92
WI660	Oil and Grease, Total Recoverable	02/92

WI670	Specific Gravity of Water and Waste Water	02/92
WI680	Trace Metal Digestion—Drinking Water, Surface Water, and NPDES Effluents	01/92
WI681	Preparation of Aqueous Samples for Spectrochemical Analysis—FAAS and ICP-OES	08/93
WI685	Preparation of Aqueous Samples for Spectrochemical Analysis—GFAAS and ICP-MS	08/93
WI690	Preparation of Sediment, Sludge, and Soil Samples for Spectrochemical Analysis—FAAS and ICP-OES	08/93
WI691	Preparation of Sediment, Sludge, and Soil Samples for Spectrochemical Analysis—GFAAS and ICP-MS	08/93
WI700	Trace Metal Digestion—Sludge	02/91
WI710	Viscosity	In Progress

Waste Water Analytical Procedures - Radiochemical

WR100	Americium-241 in Waste Water—Instrumental Gamma-Ray Spectrometry Using a Ge(Li) Detector	03/93
WR110	Americium-241 in Waste Water and Filter Cake—Instrumental Gamma-Ray Spectrometry Using a NaI Detector	03/93
WR120	Cesium-137 in Waste Water—Instrumental Gamma-Ray Spectrometry Using a Ge(Li) Detector	03/93
WR130	Cesium (Radioactive) in Waste Water—Phosphomolybdate Procedure	Retired
WR140	Gamma Activity in Waste Water—Gamma Spectrometry with Lithium-Drifted Germanium Detector	03/93
WR150	Gross Alpha, Beta, and Gamma Activity in Waste Water, Soil, Filter Cake, and Organic Materials—Gas-Flow Proportional Counting	03/93
WR160	Gross Gamma Activity in Liquid Waste Water—NaI Detector	Retired

WR170 Plutonium, Americium, and Uranium in Waste Water and Filter Cake—Aluminum Nitrate/Aliquat-336 Procedure ..... Retired

WR180 Plutonium, Americium, and Uranium in Waste Water and Filter Cake—Neodymium Fluoride Coprecipitation 04/93

WR190 Strontium-89 and Strontium-90 in Waste Water—Ion Exchange 04/93

WR200 Tritium in Waste Water and Oil—Liquid Scintillation Counting 03/93

Count Room Analytical Techniques

Count Room Procedures

CR100 Operating the 16, 32, 48, 64, 80, 96, and 112 Alpha Spectrometers 10/93

CR110 Alpha Program—Background and Calibration Data 09/93

CR130 Assigned Channels for Plutonium Isotopes—Alpha Spectrometry 09/93

CR140 Assigned Channels for Uranium and Thorium Isotopes—Alpha Spectrometry 09/93

CR150 Fecal Samples by the Phoswich Detector ..... In Progress

CR160 Single Alpha Spectroscopy 09/93

CR180 Liquid Scintillation Counting System 09/93

CR200 Alpha Gas-Flow Proportional Counting System ..... In Progress

CR240 Error Diagnostics for the Alpha-Counting Facility 10/93

CR370 Filling the HPGe Detector Systems with Liquid Nitrogen 10/93

CR380 Calibrating the HPGe Detector Systems ..... In Progress

CR390 Performance Verification for the HPGe Detector Systems 10/93

CR400 Standard Analysis for the HPGe Detector Systems 10/93

CR410 Operating the Tennelec LB5100 Gross Alpha/Beta Proportional Counting System 10/93

CR420 Data Reduction for the Tennelec LB5100 Gross Alpha/Beta Gas-Flow Proportional Counting System 10/93

CR430 Operating the NaI(Tl) Well Crystal Counting System ..... In Progress

CR440 Data Reduction for the NaI(Tl) Well Counting System ..... In Progress

CR450 Calibrating the Oxygen Sensor for the Gamma-Counting Facility ..... In Progress

CR500 Operating the Tennelec LB4000 ..... In Progress

Quality Control Analytical Techniques

Quality Control Analytical Procedures - Inorganic

QCI100 Beryllium and Lead for Vegetation Ash—QC Sample Preparation 02/93

QCI110 TCLP Elements for Water and Soil—QC Sample Preparation 10/92

QCI120 Oil and Grease in Water—QC Sample Preparation 03/93

QCI130 TCA in Urine—QC Sample Preparation ..... In Progress

QCI140 Trace Elements on Filter Media—QC Sample Preparation 09/92

QCI150 Trace Elements in Solvent—QC Sample Preparation 09/92

QCI160 Trace Elements in Urine—QC Sample Preparation ..... In Progress

QCI170 Trace Elements in Nitric Acid—QC Sample Preparation 10/92

QCI180 Trace Elements in Hydrochloric Acid—QC Sample Preparation 10/92

QCI190 Trace Elements in Water—QC Sample Preparation 10/92

QCI200 Trace Elements for Water and Soil (Hg by TCLP)—QC Sample Preparation 03/93

QCI210 Trace Elements in Water (CN)—QC Sample Preparation 03/93

QCI220 Trace Elements in Water (NO_2-N)—QC Sample Preparation 03/93

Quality Control Analytical Procedures - Organic

QCO100 Formaldehyde on Tubes—QC Sample Preparation 07/93

QCO110 Herbicides on Soil—QC Sample Preparation 07/93

QCO120 Herbicides in Water—QC Sample Preparation 07/93

QCO130 Organic Compounds on Tubes and Badges—
QC Sample Preparation 08/92

QCO140 Pesticides on Soil—QC Sample Preparation 07/93

QCO150 Pesticides in Water—QC Sample Preparation 07/93

QCO160 Polychlorinated Biphenyls on Florisil Tubes—
QC Sample Preparation ..... In Progress

QCO170 Polychlorinated Biphenyls in Oil—QC Sample Preparation 09/93

QCO180 Polychlorinated Biphenyls in Water—QC Sample Preparation 07/93

QCO190 Polychlorinated Biphenyls on Soil—QC Sample Preparation 09/93

QCO200 Polychlorinated Biphenyls on Swipes—
QC Sample Preparation 09/93

QCO210 Semivolatile Organic Compounds on Soil—
QC Sample Preparation 08/92

QCO220 Semivolatile Organic Compounds in Water—
QC Sample Preparation 08/92

QCO225 Total Petroleum Hydrocarbons on Soil—
QC Sample Preparation 07/93

QCO230 Volatile Organic Compounds on Charcoal Tubes—
QC Sample Preparation ..... In Progress

QCO240 Volatile Organic Compounds in Oil—QC Sample Preparation ... In Progress

QCO250 Volatile Organic Compounds on Soil—QC Sample Preparation 08/92

QCO260 Volatile Organic Compounds in Water—QC Sample Preparation 08/92

Quality Control Analytical Procedures - Radiochemistry

QCR100 Americium-241 in Urine—QC Sample Preparation 09/92

QCR110 Cesium-137 on Soil—QC Sample Preparation 02/93

QCR120 Cesium-137 on Vegetation Ash—QC Sample Preparation 02/93

QCR130 Cesium-137 in Water—QC Sample Preparation 02/93

QCR140 Gross Alpha and Gross Beta on Soil—QC Sample Preparation 03/93

QCR150 Gross Alpha and Gross Beta in Water—QC Sample Preparation 03/93

QCR153 Gross Gamma on Soil—QC Sample Preparation 07/93

QCR155 Gross Gamma in Water—QC Sample Preparation 07/93

QCR160 Plutonium and Americium on Soil—QC Sample Preparation 02/93

QCR170 Radionuclides on Vegetation Ash—QC Sample Preparation 02/93

QCR180 Plutonium and Americium in Water—QC Sample Preparation 02/93

QCR190 Plutonium-238 in Urine—QC Sample Preparation 09/92

QCR200 Plutonium-239 in Urine—QC Sample Preparation 09/92

QCR210 Radionuclides on Filter Media—QC Sample Preparation 03/93

QCR220 Radium-226 in Water—QC Sample Preparation 02/93

QCR230 Strontium-90 on Soil—QC Sample Preparation 02/93

QCR240 Strontium-90 in Water—QC Sample Preparation 09/92

QCR250 Tritium and Percent Moisture on Soil—QC Sample Preparation 02/93

QCR260 Tritium in Urine—QC Sample Preparation 09/92

QCR270 Tritium in Water—QC Sample Preparation 03/93

QCR280	Uranium in Soil—QC Sample Preparation	02/92
QCR290	Uranium-235 in Urine—QC Sample Preparation	Retired
QCR300	Uranium-238 in Urine—QC Sample Preparation	Retired

Miscellaneous Procedures

	General Procedure for Cleaning Laboratory Equipment	In Progress
QCM200	Preparation of a Vegetation Ash Matrix	03/93

Quality Control Analytical Procedures - Intercomparison Studies

QCS100	EPA Air Filter Intercomparison Study	05/93
QCS110	DOE Beryllium Intercomparison Study	In Progress
QCS120	EPA Drinking Water Study	In Progress
QCS130	EPA Gamma in Water Intercomparison Study	05/93
QCS140	EPA Gross Alpha and Beta in Water Intercomparison Study	05/93
QCS150	EPA Performance Evaluation Study	05/93
QCS160	NPDES Study	In Progress
QCS170	NIOSH PAT Program	In Progress
QCS180	EPA Plutonium in Water Intercomparison Study	05/93
QCS190	EML Quality Assessment Program	In Progress
QCS200	EPA Radionuclides in Milk Intercomparison Study	05/93
QCS210	EPA Radium in Water Intercomparison Study	05/93
QCS220	EPA Strontium in Water Intercomparison Study	05/93
QCS230	EPA Tritium in Water Intercomparison Study	05/93
QCS240	EPA Uranium in Water Intercomparison Study	05/93

QCS250	EPA Water Pollution Study	In Progress

Intercomparison Studies

General Procedure for Distributing Beryllium Study	In Progress
General Procedure for Distributing EML Study	In Progress
General Procedure for Distributing EPA Drinking Water Study	In Progress
General Procedure for Distributing EPA Water Pollution Study	In Progress
General Procedure for Distributing EPA Radionuclide Environmental Monitoring Studies	In Progress
General Procedure for Distributing NIOSH PAT Study	In Progress
General Procedure for Distributing NPDES Study	In Progress

Laboratory Safety

LS-1	Safety Policy	01/90
LS-2	Emergency Plan	01/90
LS-3	Emergency Response	01/90
LS-4	Personnel Safety	01/90
LS-5	General Laboratory Procedures	01/90
LS-6	Chemical Safety and Chemical Hazard Communication	01/90
LS-7	Laboratory First Aid	01/90

INTRODUCTION

The following abbreviations and reagent and procedural conventions are used in the written methods:

1. Abbreviations

1.1. Standard prefixes are used with the abbreviations for gram (g), liter (L), meter (m), and curie (Ci).

These are

c	— centi	10^{-2}	n	— nano	10^{-9}
m	— milli	10^{-3}	p	— pico	10^{-12}
μ	— micro	10^{-6}	f	— femto	10^{-15}

1.2. Other abbreviations are

amu	atomic mass units
BOM	Beckman oxygen meter
°C	degrees Celsius
CALC	calculation
CB	conductivity bridge
CORR	corrosivity
FP	flash point
KIT	polychlorinated biphenyl (PCB) field-test kits
M	molar
N	normal
PAPER	paper test strips
RESIS	resistivity
RT	retention time
S	siemens (1/ohm)
TITR	titration
VISC	viscosity

1.3. Abbreviations for instrumental techniques are

AA	atomic absorption
AAC	flameless atomic absorption with chemical separation
ACOLR	automated colorimetry
AENA	automated epithermal neutron activation

ALS	automatic liquid sampler
ATNA	automated thermal neutron activation
CALOR	calorimetry
CEA	combustion-elemental analyzer
COLOR	spectrophotometric, colorimetric
COUL	coulometry
CVAA	cold vapor atomic absorption spectroscopy
CVGFA	cold vapor gold film analyzer
DISE	microdiffusion ion-selective electrode
DNA	delayed neutron assay
ETVAA	electrothermal vaporization atomic absorption
FAA	flame atomic absorption
FAAC	flame atomic absorption with chemical separation
FAAS	flame atomic absorption spectrometry
FIA	flow injection analysis
FTIR	Fourier transformation infrared spectroscopy
G	gamma spectroscopy
GASEV	gas evolution (CO_2)
GC	gas chromatography
GCEC	gas chromatography–electron capture
GCECD	gas chromatography–electron capture detector
GCFID	gas chromatography–flame-ionization detector
GCHECD	gas chromatography–Hall electrolytic conductivity detector
GCIR	gas chromatography–infrared
GCMS	gas chromatography–mass spectrometry
GCPI	gas chromatography–photoionization
GCPID	gas chromatography–photoionization detector
GCPT	gas chromatography–purge and trap
GE	gas electrode
GELI	Ge(Li), gamma spectroscopy
GFAAS	graphite furnace atomic absorption spectrometry
GLL	gamma spectroscopy, low level
GRAV	gravimetry (evaporation)
HAA	hydride-generation atomic absorption
HPGe	high-purity germanium
HPLC	high-performance liquid chromatography

HYDRO	hydrometry
IC	ion chromatography
ICPAES	inductively coupled plasma–atomic emission spectrometry
ICPMS	inductively coupled plasma–mass spectrometry
ICPOES	inductively coupled plasma–optical emission spectrometry
IENA	instrumental epithermal neutron activation
IR	infrared spectrometry
ISE	ion-selective electrodes
ITNA	instrumental thermal neutron activation
KPA	kinetic phosphorus analysis
LS	liquid scintillation counting
MS	mass spectrometry
MSCAN	mass scan via inductively coupled plasma–mass spectrometry
NAA	neutron activation analysis
NAI	sodium iodide, gamma spectroscopy
PC	proportional counting
PHW	Phoswich
POTEN	potentiometry
PTGC	purge and trap–gas chromatography
PTITR	potentiometric titration
RAS	radiochemical alpha spectrometry
RENA	radiochemical epithermal neutron activation
RPC	proportional counting with radiochemical separation
RTNA	radiochemical thermal neutron activation
SC	scintillation counting with Na(I) crystal
TCGS	thermal neutron capture prompt gamma-ray spectrometry
XRF	x-ray fluorescence

1.4. Radioactivity Units

	Equivalent Activity in Other Units				
Activity Unit	**dis/min**	**dis/sec (Bq)**	**pCi**	**μCi**	**Ci**
1 dis/min	**1**	**0.0167**	**0.450**	**4.50×10^{-7}**	**4.50×10^{-13}**
1 dis/sec (Bq)	**60**	**1**	**27.0**	**2.70×10^{-5}**	**2.70×10^{-11}**
1 pCi	**2.22**	**0.0370**	**1**	**10^{-6}**	**10^{-12}**
1 μCi	**2.22×10^{6}**	**3.70×10^{4}**	**10^{6}**	**1**	**10^{-6}**
1 Ci	**2.22×10^{12}**	**3.70×10^{10}**	**10^{12}**	**10^{6}**	**1**

1.5. Mass Units

Unit	Abbreviation	Wt/Wt	Wt/Vol	Vol/Vol
parts per million	**ppm**	**mg/kg**	**mg/L**	**μL/L**
		μg/g	**μg/mL**	**nL/L**
parts per billion	**ppb**	**μg/kg**	**μg/L**	**nL/L**
		ng/g	**ng/mL**	
milligram percent	**mg%**	**mg/100 g**	**mg/100 mL**	

2. Chemical Conventions

2.1. Freshly opened bottles of commercial concentrated acids and ammonium hydroxide are uniformly of the concentrations indicated below.

HOAc	17.4 M (100%)
HCl	11.6 M (36%)
HNO_3	15.4 M (69%)
H_3PO_4	14.6 M (85%)
H_2SO_4	17.8 M (95%)
NH_4OH	14.8 M (28%)

2.2. Water or H_2O refers to distilled water that is passed through an ion exchange column composed of a mixture of both acidic cation and basic cation exchange resins.

2.3. Diluted acids are usually given as parts of acid to be added to parts of water. Thus 1:9 means one part of concentrated acid plus nine parts of water by volume. In some procedures, normality (N) or molarity (M) values are given.

2.4. Concentrations or dilutions are approximate, unless stated as exact or that preparation or dilution in a volumetric flask is required.

2.5. Chemicals should be reagent grade, free from particles and color, conforming to the specifications of the Committee on Analytical Reagents of the American Chemical Society, where such specifications are available.

2.6. The conventions used for pH determination are that wide-range pH paper may be used for obtaining the pH indicated unless measurements with narrow-range paper or a pH meter are specifically mentioned.

2.7. All standards used, wherever possible, are traceable to National Institute of Standards and Technology Standard Reference Material or to other commercially available standards.

2.8. It is considered that good analytical and laboratory safety practices will be followed in all work: that apparatus is clean, that care will be exercised to prevent contamination of samples, that all transfers are quantitative, and that all precipitates are washed carefully. Where qualifications appear, they indicate that extra care is required.

2.9. Precision and accuracy statements are provided for each procedure where possible. These statements are derived from quality control studies conducted by laboratory personnel and from quality assurance samples obtained from the US Environmental Protection Agency, the NIOSH Proficiency Analytical Testing (PAT) Program, the US National Bureau of Standards, and the International Atomic Energy Agency.

2.10. Approximate tracer concentrations are given in the calibration and standards section of each procedure.

2.11. The Acceptable Minimum Detectable Activity is defined in the Performance Criteria for Radiobioassay, ANSI N 13.30, as follows: The amount of activity, based on "need" and existing "state of the art," that indirect bioassay procedures should be able to measure.

2.12. Methods of preservation are relatively limited and are intended generally to (1) retard biological action, (2) retard hydrolysis of chemical compounds and complexes, and (3) reduce volatility of constituents. Preservation methods are generally limited to pH control, chemical addition, refrigeration, and freezing.

DOCUMENT CONTROL AND DOCUMENT CHANGE

1. Document Control

Document control in the analytical laboratory is needed to ensure that personnel have current methods, specifications, and standards in their possession and that they are not using obsolete documents. A document control system ensures that: 1) analyses and calibrations are carried out in accordance with the latest analytical document issue; 2) an effective communication system between personnel is developed; 3) a central storage and issue point for analytical documents and changes is established; and 4) the legal and accreditation requirements are met.

The quality control coordinator will maintain full control of the distribution of analytical documents. A central file shall be maintained by the Quality Assurance and Data Management section showing the following information:

- procedure title,
- method number,
- effective date,
- latest change date,
- signatures of persons approving changes, and
- signatures of persons receiving the document.

A complete archival file will also be maintained.

Whenever a change is made, the quality control coordinator shall issue the new document together with the approved change request. Recipients of new or changed documents must acknowledge receipt by signature. Obsolete documents shall be recycled.

2. Document Change

Requests for changes to analytical methods may be initiated by Laboratory personnel by completing the Analytical Method Change Request form (Fig. 1). The change must be approved by the deputy group leader for Chemistry, the section leader, and the quality control coordinator before the change is used and distributed.

Changes may be officially announced by issuing entirely new documents or replacement pages or, in the case of minor changes, corrections of errata, etc., by requesting that pen-and-ink changes be made to the original document. This action shall be noted on the change request form and in the Laboratory notebook where results are recorded from the analysis. The quality control coordinator is responsible for obtaining the required signatures and for distributing the documents to those concerned.

3. Document Changes—New Analytical Methods

These procedures shall be followed when new analytical methods are proposed to replace existing methods. Suggestions or requests for changes in analytical methods that will give

results equal to or better than present procedures are encouraged from all personnel. No changes from approved procedures shall be made without following the procedures under Section 2.

A request for study of major changes in analytical methods shall be made in writing to the section leader. Major changes are defined as those changes that will require a significant amount of personnel time to show a benefit to the section's effort. All such studies undertaken shall have written approval of the section leader and shall follow a well-planned experimental design to allow for completion of the study in an orderly time frame.

Reports on the progress of the study, including all raw data, shall be made to the section leader. A report shall be written for review when the experimental study is completed. If the study indicates that an improvement in the method of the analysis may result, a comparison study of the results obtained using the new method and the old method shall be outlined.

4. Methodology for Testing Analytical Procedures

The following methodology shall be followed to statistically test analytical procedures.

4.1. Old vs New Methods. Suggestions for improvements in existing analytical procedures are encouraged. If the existing procedure has shown poor accuracy or precision, a review of the procedure should be undertaken to determine if the documented procedure is being followed correctly. A review of the literature should be undertaken before beginning the development of a new procedure.

Following completion of the experimental studies and completion of a report to the section leader, a comparison study of the new and old procedures shall be made that will allow statistical testing of results measured by both methods. Statistical tests used for these studies shall be standard statistical methods.

If the new procedure results show high accuracy and precision compared to the old procedure results, as few as 10 samples analyzed by both methods may show highly significant improvement that will warrant acceptance of the new method. However, when an existing procedure shows high precision and accuracy, it may be necessary to analyze a large number of samples to show a statistically significant improvement between the two methods of analysis. The number of samples that is used to compare the methods will depend on the entire study, including the planning and care that was exercised in obtaining the results.

The following conditions should be examined when setting up a comparison study:

- sensitivity for detecting the material of interest;
- limitations, if any, on the concentration that can be measured;
- interference factors that may give false positive or false negative results; and
- levels of accuracy and precision required to meet good analytical standards.

The routine samples submitted for analysis should be equally divided and each half analyzed by the two methods under study. Because statistical testing can only be performed on positive data, either NBS standard reference materials or spiked samples prepared by the quality control coordinator must be included in the studies. These samples should be similar to the procedure outlined under evaluation of new procedures in Section 4.2. Results from these studies should be evaluated by the analyst for significance as data become available.

4.2. New Procedures Evaluation. Evaluation of new procedures shall include the analysis of sufficient samples to allow for study of the same parameters outlined in Section 4.1, Evaluation of Old vs New Methods.

To allow for statistical testing of results from analytical procedures, the following steps should be followed. A series of no less than four sets of NBS standard reference materials and/or quality control samples, of the same matrix as the samples to be analyzed, should be prepared. Each of the sets should include no less than three samples. The concentration spike in these sets should bracket the concentrations of material that would normally be measured by the procedure. These steps will allow for testing the resulting data by standard statistical methods.

ANALYTICAL METHOD CHANGE REQUEST

Date_____ Method No._____

Method Title_____

Requested by_____

Change from_____

_____

_____

_____

_____

Change to_____

_____

_____

_____

_____

Reason for change_____

_____

_____

_____

_____

Approved by:

Section Leader_____ Date_____

Quality Control Coordinator_____ Date_____

Fig. 1. Analytical method change request.

CONTENTS

Preface R-3

Acknowledgments R-5

Abstract R-7

The page numbering convention used in this manual consists of the specific procedure number (shown at left in list below) followed by the page number for that procedure. Thus, R110-2 is page two of procedure R110. The right column in the list below gives each procedure's status or effective date.

Radiobioassay Chemistry Analytical Techniques

Radiobioassay Analytical Procedures

R100 Americium in Urine—Alkaline Earth Phosphate 02/93

R110 Americium and Plutonium in Fecal Samples—
A Screening Procedure 02/93

R120 Cesium-137 in Urine . . . . . Retired

R130 Gross Beta Activity . . . . . Retired

R150 Phosphorus-32 in Urine . . . . . Retired

R160 Polonium-210 in Urine . . . . . Retired

R170 Plutonium in Urine—Alkaline Earth Phosphate Procedure 05/93

R190 Plutonium in Urine—Rapid Method . . . . . Retired

R200 Plutonium in Fecal Samples—RAS 04/93

R210 Thorium in Urine—Colorimetric . . . . . Retired

R230 Tritium (T_2O or TOH) in Urine—Direct Procedure 09/92

R240 Tritium in Urine—Distillation . . . . . Retired

R250 Uranium—Delayed Neutron Counting ..... Retired

R260 Uranium in Urine—Anion Exchange and Radiometric ..... Retired

R261 Uranium (Isotopic) in Urine—Alkaline Earth Phosphate and Alpha Spectrometry 05/93

R270 Uranium in Urine—Anion Exchange and Colorimetric ..... Retired

R280 Uranium-238 Fluorometric ..... Retired

R290 Uranium in Urine—ICPMS 11/90

PLUTONIUM IN URINE—ALKALINE EARTH PHOSPHATE PROCEDURE

Analyte: Plutonium	**Method No.:** R170
Matrix: Urine	**Accuracy and Precision:** 95% ± 7% (mean ± 1 sigma) at the 2-pCi level
Minimum Detectable Activity: 0.03 pCi/700 mL	**Acceptable Minimum Detectable Activity:** Urine 0.06 pCi/L
Procedure: Coprecipitation and alpha spectrometry	
Effective Date: 10/01/86	**Author:** William D. Moss Rubanna Rodriguez Gloria Martinez

SAFETY NOTE: Before beginning this procedure, read all of the Material Safety Data Sheets for the chemicals listed in Sec. 7. Read Sec. 4.3 of the EM-9 Safety Manual for information on personal protective clothing and equipment. Read Sec. 12 of this procedure and Source Material 13.8 for proper waste disposal practices.

1. Principle of Method

1.1. Plutonium is coprecipitated with alkaline earth phosphate in Teflon bottles at room temperature.

1.2. The precipitate is dissolved in 8 N HNO_3, heated, and absorbed onto anion-exchange resin.

1.3. The plutonium is eluted from the column with 0.36 M HCl and 0.008 M HF.

1.4. Plutonium is electrodeposited on a stainless-steel disk.

1.5. The alpha activity is determined by alpha pulse height analysis. Plutonium-242 tracer recovery is used to correct for chemical loss.

2. Sensitivity

2.1. Sensitivity is limited by the counter background.

2.2. For routine measurements with a 70,000-s counting period and a counting efficiency of 30%, the minimum detection limit (the 95th percentile of the background distribution) is 0.03 pCi per sample. See Step 11.3.3.

3. Accuracy and Precision

3.1. Mean recovery of ^{242}Pu tracer is equal to 95% ± 7% at the 2-pCi concentration level.

4. Interferences

4.1. Interference is caused by alpha activity from thorium.

5. Collection and Storage of Samples

5.1. Equivalent 24-h samples, two morning and two evening voidings, are collected in specimen bottles. The minimum volume analyzed for routine measurements should be 500 mL to allow detection of the plutonium relative to an estimated 24-h excretion.

5.2. Refrigerate samples before analysis.

6. Apparatus

6.1. Alpha spectrometer: equipped with a 1024-channel analyzer using 300-mm^2 silicon-surface barrier detectors.

6.2. Beakers: 30-mL.

6.3. Coin holders: Grisby Bros., 817 N.E. Madroma, Portland, Oregon 87211, to hold disks after plating.

6.4. Electrodeposition apparatus: dc power supply to provide up to 500 mA of regulated current to each electrolytic cell.

6.5. Electrolytic cell: polyethylene cell body 2.22-cm-o.d. by 9.0-cm-long threaded on one end and a stainless-steel cap threaded to fit and hold 1.59-cm-diam stainless-steel disk in place (Fig. 1). Fabricated at Los Alamos.

6.6. Graduated cylinders: 10-mL and 1000-mL.

6.7. Hot plates: 500-W and 1000-W, adjustable to 200°C.

6.8. Ion-exchange columns: glass column, 50-mm-long by 15-mm-o.d. (12-mm-i.d.), with a reservoir at the top, 80-mm-long by 45-mm-o.d., and a 45° angled taper at the bottom (Fig. 2).

6.9. Teflon bottles: wide-mouth, 1000-mL, Catalog No. 16128-535, VWR Scientific, Los Alamos, New Mexico 87545.

6.10. Stainless steel disks: 1.59-cm (5/8-in.) disk, fabricated from 15- to 20-mil 316 stainless steel, cold rolled or No. 4 finish.

6.11. Teflon-coated stirring bars: 1½-in.

6.12. Fume hood.

6.13. Infrared heat lamp: 250-W.

6.14. Eyedroppers.

6.15. Polyethylene wash bottles: 16-oz.

6.16. Glass wool.

6.17. Filter paper: Whatman No. 2.

6.18. Wide-mouth polyethylene bottle: 1000-mL.

6.19. Polyethylene dropping bottle: 6-oz.

6.20. Ion-exchange column: to hold one pound of resin (Fig. 3).

6.21. Stirring plate.

7. Reagents

7.1. Nitric acid (8 M). Dilute 1000 mL of concentrated HNO_3 (70%, specific gravity 1.42) to 2000 mL with H_2O.

7.2. Sodium hydroxide (25 weight percent). Dilute the 50% reagent with an equal volume of H_2O.

7.3. Eluant solution (0.36 M HCl • 0.01 M fluoride). Dilute 30 mL of concentrated HCl and 230 mg of ammonium bifluoride (NH_4F-HF) to 1000 mL with H_2O.

7.4. Plutonium-242 tracer. A solution of 2 pCi/mL in 8 M HNO_3.

7.5. 1-Octanol (Eastman, practical-grade).

7.6. Sodium sulfate solution (15%). Dissolve 150 g of anhydrous sodium sulfate and dilute to 1000 mL with water. Filter.

7.7. Sodium bisulfate solution (5%). Dissolve 50 g of $NaHSO_4 \cdot H_2O$ and dilute to 1000 mL with H_2O.

7.8. Calcium nitrate solution. Dissolve one pound (453 g) of $Ca(NO_3)_2 \cdot 4H_2O$ and dilute to 450 mL with H_2O. Filter the solution through Whatman filter paper.

7.9. Hydrogen peroxide solution (30%).

7.10. Bio-Rad anion-exchange resin (AG 1-X4, 100-200 mesh). See Step 9.1 for preparation of resin.

7.11. Ammonium hydroxide (concentrated 28%-30%).

7.12. Phosphoric acid (85%, specific gravity 1.70).

7.13. Acetone.

8. Calibration and Standards

8.1. Plutonium-242 tracer.

8.1.1. The ^{242}Pu stock solution is obtained from Oak Ridge National Laboratory.

8.1.2. The tracer solution is prepared in an acid medium (8 M HNO_3) and heated at 80°C for 2 h to assure that the plutonium is in the ionic Pu (IV) valence state.

8.1.3. Concentration of the tracer is in the 2-pCi/mL (4.44-dpm) range and is standardized against NIST standard reference material NIST SRM 4906 B15, a ^{238}Pu standard.

8.2. Calibration of the alpha spectrometer.

8.2.1. The alpha secondary standards contain the isotopes ^{241}Am, ^{239}Pu, and ^{242}Pu and are standardized in a gas flow proportional counter using the NIST ^{238}Pu (NIST SRM 4906 B15) primary standard.

8.2.2. Calibration counts are made for 1020 s. The efficiency of each detector is determined by integrating the counts in 19 channels (12 channels to the left of the peak and 6 channels to the right of the peak) of the energy spectrum of each of the three isotopes.

8.2.3. Background counts are accumulated for each energy spectrum for each detector for 70,000 s.

9. Procedure

9.1. Preparation of one pound of Bio-Rad AG 1-X4, 100-200 mesh resin for the anion exchange of plutonium.

9.1.1. To remove the fines, pour a pound of resin into a 2-L beaker and add water to give a volume of approximately 1600 mL.

9.1.2. Stir the slurry on a magnetic stirrer for 3 to 5 min.

9.1.3. Slowly decant the water along with the fines when the bulk of the resin has settled.

9.1.4. Repeat Steps 9.1.1 to 9.1.3 twice using 8 M HNO_3.

9.1.5. Store the resin as an 8 M HNO_3 slurry in the original bottle.

9.2. Chemical isolation.

9.2.1. Pour the entire contents of the sample into a 2000-mL graduated cylinder. Measure and record the volume, specific gravity, and temperature of the sample.

9.2.2. Add 5 to 10 drops of 1-octanol to the sample.

9.2.3. Rinse each bottle with approximately 5 mL of 8 M HNO_3. Add the acid wash to the sample. Mix the solution.

9.2.4. Pour 700 mL of urine into a 1000-mL wide-mouth Teflon bottle. If less than 700 mL of urine is available, use the entire sample but not less than 500 mL. See Step 5.1.

9.2.5. For special samples with high activities, smaller aliquots are used.

9.2.5.1. Select an aliquot based on liquid scintillation measurements or other available information.

9.2.5.2. Add this aliquot to a 1000-mL wide-mouth Teflon bottle. Record aliquot volume.

9.2.5.3. Add 100 mL distilled water to the bottle. Proceed with Step 9.2.6.

9.2.6. Add 1 mL of ^{242}Pu tracer solution.

9.2.7. Add 0.1 mL (2 drops) of $Ca(NO_3)_2$ solution.

9.2.8. Add 1 mL of concentrated H_3PO_4.

9.2.9. Add 10 mL of 30% H_2O_2.

9.2.10. Add 100 mL of concentrated NH_4OH.

9.2.11. Place cap on Teflon bottle and stir for 5 min. Let bottle stand for 30 min. Loosen cap and let sample settle overnight before proceeding to Step 9.2.12.

9.2.12. Uncap bottle and slowly decant the supernatant solution. The resulting slurry should be ~ 100 mL.

9.2.13. Add 100 mL concentrated HNO_3. Swirl mix to dissolve slurry.

9.2.14. Place cap loosely on bottle.

9.2.15. Set the bottle on a hot plate that has a surface temperature of 120°C-150°C for 90 min. Swirl the solution to wash the sides of the bottle.

NOTE: Heating the sample assures conversion of Pu to the +4 valence state.

9.3. Anion exchange separation.

9.3.1. Put a plug of glass wool into the bottom of the anion-exchange column and fill the column with AG 1-X4, anion-exchange resin. Wash the column with H_2O until the resin column maintains a constant level.

9.3.2. Wash the column reservoir with 75 mL of 8 M HNO_3 and allow the solution to drain down to the top of the column.

9.3.3. Pour sample into the column reservoir.

9.3.4. When all of the sample has been transferred to the column reservoir and has completely drained, rinse the bottle with 8 M HNO_3 and pour the washings into the column reservoir. Wash the bottle two additional times with 5-10 mL 8 M HNO_3.

9.3.5. When the 8 M HNO_3 solution has drained down to the top of the resin column, wash the walls of the reservoir with 8 M HNO_3. Repeat this washing three additional times.

NOTE: If the solution does not completely drain down to the top of the resin column before the next increment of 8 M HNO_3 wash is added, the calcium will not be completely separated from the plutonium. Presence of Ca on the electroplated surface will interfere with measurement of alpha activity.

9.3.6. Fill the reservoir with 8 M HNO_3.

9.3.7. Place a 30-mL beaker under the column after all the wash solution has flowed through the column.

9.3.8. Add 25 mL of 0.36 M HCl • 0.01 M fluoride eluting solution.

9.3.9. Add 2 mL of 5% $NaHSO_4$ solution to the 30-mL beaker. Stir the solution.

9.3.10. Evaporate the slurry to dryness on a hot plate with a surface temperature of 120°-150°C. The surface temperature should not be above 150°C for the first 30 min because the solution may splatter. If the residue is brown, add 10 mL of 8 M HNO_3 to the sample, reflux covered for 1 h, then evaporate to dryness.

9.3.11. Remove beakers from hot plate and allow to cool.

9.4. Electrodeposition.

9.4.1. Add 4 mL of electrolyte solution (15% Na_2SO_4) to the beaker.

9.4.2. Remove the backing (paper or plastic) from the stainless-steel disk and wash the disk with acetone.

9.4.3. Assemble the cell, placing the disk into the bottom depression of the cap, and screw together.

9.4.4. Fill the cell with water to test for leaks. Discard the water.

9.4.5. Add the sample solution to the cell.

9.4.6. Rinse the sample beaker with water and add the wash to the cell. Fill to within 15 mm of the top.

9.4.7. Place the cell in the electrodeposition rack and cover with a plastic cover.

9.4.8. Attach the cathode lead to the cell cap.

9.4.9. Turn on the main switch of the electrodeposition unit. Turn the switch on each unit to positive and set to a current of 0.5 A.

9.4.10. Electroplate for 180 min (3 h).

9.4.11. Add 1 to 2 mL of 25% NaOH to the cell and, after 60 s, turn off the current.

9.4.12. Pour the solution out of the cell and disassemble the cell. Wash the stainless-steel disk with H_2O. **Be sure not to touch the surface of the disk.**

9.4.13. Dry the disk under a heat lamp, number the back of the disk with a marking pen, and put the disk into the coin holder, numbered and labeled with sample identification.

10. Operation of the Alpha Spectrometer

10.1. Refer to the operating manual for the alpha spectrometer.

11. Calculations

11.1. Samples are counted for 70,000 s. Alpha activity, corresponding to the isotopes of ^{242}Pu, ^{239}Pu, and ^{238}Pu, is determined by integrating counts in 19 channels (12 channels to the left of the peak and 6 channels to the right of the peak) for each energy. See Table I.

11.2. Calculations are made using the following formulas.

11.2.1. Determination of chemical recovery.

$$RF = \frac{C_s - C_b}{T \times D \times S} ,$$

where RF = recovery factor for ^{242}Pu tracer,
C_s = ^{242}Pu sample counts,
C_b = ^{242}Pu background counts,
T = count length in minutes,
D = detector counting efficiency, and
S = disintegrations per minute (dpm) of ^{242}Pu standard.

11.2.2. Determination of the amount of ^{238}Pu and ^{239}Pu in the sample.

$$pCi = \frac{C_s - C_b}{T \times D \times RF \times 2.22} ,$$

where pCi = concentration of Pu in the sample,
C_s = ^{239}Pu or ^{238}Pu counts,
C_b = background counts,
T = count length in minutes,
D = detector efficiency,
RF = recovery factor for ^{242}Pu, and

2.22 = factor used to convert dpm to pCi.

11.2.3. Urine samples are corrected for estimated 24-h excretion based on sample volume and specific gravity (corrected to 15°C).

$$T = V + [((SG - 1.000) \times 1000) \times 21] + (-415) \quad ,$$

where T = time in minutes,
V = volume in mL of aliquot analyzed, and
SG = specific gravity.

$$EE = \frac{Pu \times 1440}{T} \quad ,$$

where EE = estimated excretion of 24 h,
Pu = pCi of Pu in aliquot analyzed,
1440 = minutes in 24-h period, and
T = time in minutes.

11.3. Detection limits.

11.3.1. The minimum detectable amount (MDA) of plutonium alpha activity determined by this procedure is a function of the instrument background counts in the energy area of the $^{239,238}Pu$, the tracer recovery, and the counting efficiency of the system.

11.3.2. Calculation of the MDA.

$$MDA = \frac{(4.65 \times S_b + 3)}{E \times RT \times T} \quad ,$$

where MDA = minimum detectable amount expressed in dpm,
4.65 = constant necessary to achieve desired protection against Type I and Type II statistical errors at the 0.05 confidence level,
3 = constant to allow for error of small-count statistics associated with Poisson distributions,
$*S_b$ = the standard deviation of the population of counts obtained from the analysis of quality control blank urine samples,
E = detector counting efficiency (expressed as a fraction),

RT = chemical recovery (expressed as a fraction), and
T = standardized sample counting time (1167 min).

*The mean blank counts for the 5.15- and 5.5-keV alpha energies average 3 counts per 70,000 s, and the estimated value of S_b would equal the square root of 3, or 1.73.

11.3.3. The MDA for a sample using this formula would be 0.06 dpm or 0.03 pCi per sample aliquot. The calculation assumes a mean recovery of the tracer of 60%, a mean background of 3 counts, a 1167-min count length, and a counting efficiency of 30%. If higher tracer recoveries are achieved, >60%, a lower MDA is also achieved. MDAs are calculated for each reported sample. Correction for sample volume is not included in the above formula, and this factor must be taken into account when results are expressed per total sample volume analyzed.

11.3.4. If results are to be reported in Bq, divide the dpm by 60.

12. Proper Waste Disposal Practices

12.1. Discard the supernate from Step 9.2.12 into the acid drain system.

12.2. The column washes from Steps 9.3.1. through 9.3.6 are caught in a basin with continuous flow into the acid drain system.

12.3. Discard the electroplating solution from Step 9.4.12 into the acid drain system.

12.4. After counting the stainless-steel sample disc, discard it into a solid radioactive waste container.

12.5. Waste pickup.

12.5.1. See AR 10-3 for general Laboratory policy on waste disposal.

12.5.2. Fill out the Waste Profile Request Form (WPRF) and send it to EM-8 along with all pertinent MSDS sheets. The form will be returned to the group waste management coordinator who will return it to the waste generator.

12.5.3. After the WPRF is returned signed off by EM-8 and with a reference number, fill out the Radioactive Solid Waste Disposal Request (RSWD) form. Send this form and the original WPRF(s) to EM-7.

12.5.4. After the RSWD is returned, call HS-1 to have a monitor come and monitor and tag the container.

12.5.5. After the container has been tagged by the monitor call EM-7 to arrange for pickup of the container.

13. Source Materials

13.1. I. K. Kressin, *Anal. Chem.* **49**, 842 (1977).

13.2. I. K. Kressin, W. D. Moss, E. E. Campbell, and H. F. Schulte, *Health Phys.* **28**, 41 (1975).

13.3. E. E. Campbell and W. D. Moss, *Health Phys.* **11**, 737-42 (1965).

13.4. I. K. Kressin and G. R. Waterbury, *Anal. Chem.* **34**, 1598 (1962).

13.5. W. D. Moss, E. R. Gonzales, R. Rodriguez, G. M. Martinez, and H. M. Ide, "A Simplified Plutonium Bioassay Procedure," Thirty-Second Annual Conference on Bioassay, Analytical and Environmental Radiochemistry, National Bureau of Standards, Gaithersburg, Maryland, October 21-23, 1986.

13.6. L.A. Currie, "Limits for Qualitative Detection and Quantitative Determination," *Anal. Chem.* **40**, 586-593 (1968).

13.7. L.A. Currie, "Lower Limit of Detection: Definition and Elaboration of a Proposed Position for Radiological Effluent and Environmental Measurements," U.S. Nuclear Regulatory Commission report NUREG/CR-4007 (September 1984).

13.8. "Hazardous and Mixed Waste," Administrative Requirement 10-3, in *Environment, Safety, and Health Manual*, Los Alamos National Laboratory Manual, Chapter 1 (most recent edition).

Revisions or additions to the procedure are marked (▒▒▒). Where a section heading is marked, the entire section has been revised.

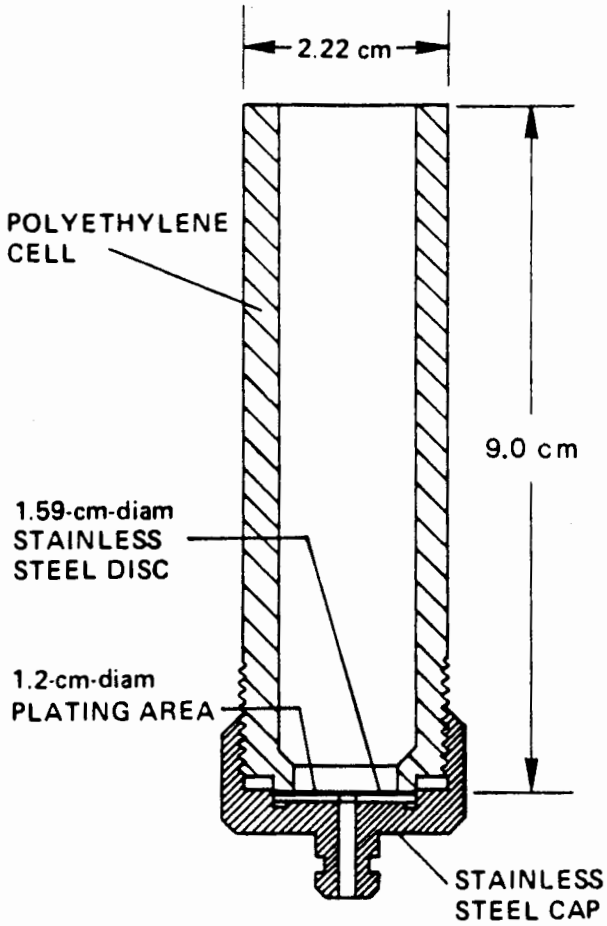

Fig. 1. Electrolytic cell.

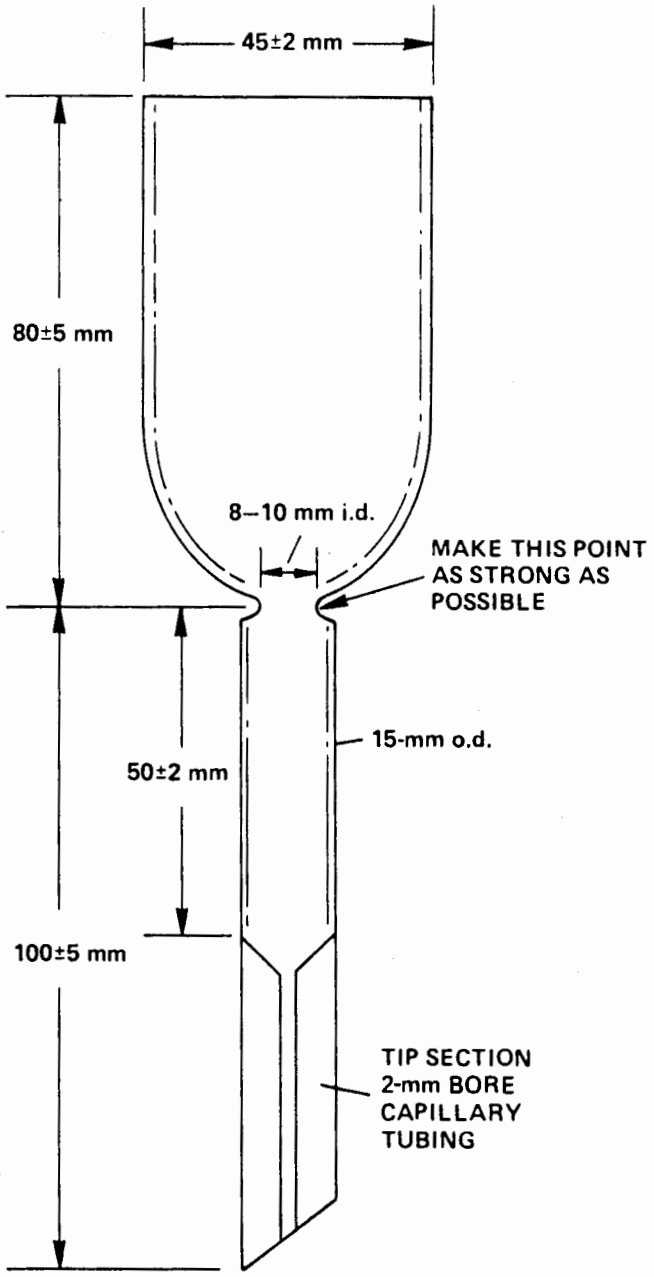

Fig. 2. Ion exchange column.

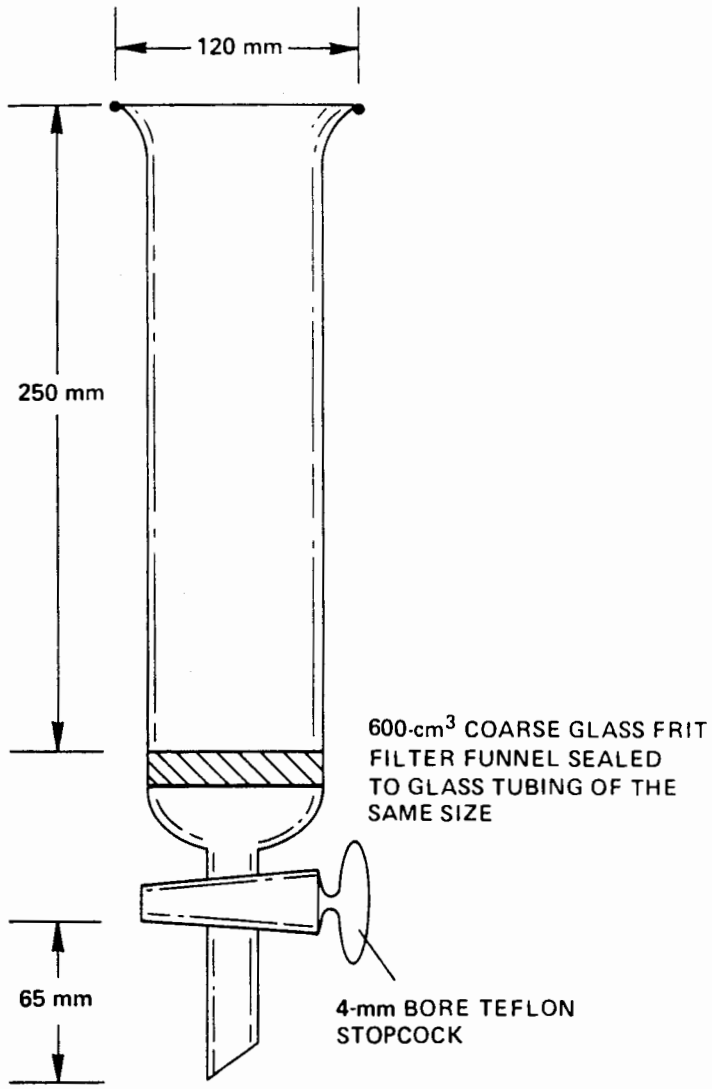

Fig. 3. Column for resin conditioning.

PLUTONIUM IN FECAL SAMPLES — RAS

Analyte: ^{239}Pu, ^{238}Pu	**Method No.:** R200
Matrix: Feces	**Minimum Detectable Concentration:** 0.03 pCi/sample
Procedure: Radiochemical Alpha Spectrometry	**Accuracy and Precision:**
Effective Date: 01/01/92	**Author:** Daryl Knab

SAFETY NOTE: Before beginning this procedure, read all of the Material Safety Data Sheets for the chemicals listed in Sec. 7. Read Sec. 4.3 of the EM-9 Safety Manual for information on personal protective clothing and equipment. Read Sec. 10 of this procedure for proper waste disposal practices.

1. Principle of Method

1.1. The fecal sample is dry-ashed and then wet-ashed.

1.2. The Pu is separated from the dissolved sample by ion exchange and quantified by alpha spectrometry.

2. Sensitivity

2.1. The method has a detection limit of 0.02 pCi/sample when samples are counted overnight.

3. Accuracy and Precision

3.1. There are no National Institute for Standards and Technology (NIST) Standard Reference Materials (SRM) for plutonium in fecal material. A group of analysts are attempting to develop some in response to ANSI 1330. The accuracy and precision for urine samples will approximate the fecal sample results. Because of the dry-ashing step, results will be biased ~15% low.

4. Interference

4.1. During dry-ashing at high temperatures, some Pu will adhere irretrievably to the glass beaker, resulting in low recoveries of sample Pu. It is not possible to trace the sample before ashing.

5. Collection and Storage of Samples

5.1. For esthetic reasons the samples are stored under refrigeration at ~4°C.

5.2. The samples are collected by HS-12.

6. Apparatus

6.1. Muffle furnace: Lindberg Laboratory box furnace: model no. 51848 on equivalent.

6.2. Hot plate.

6.3. Beakers: 250- and 600-mL.

6.4. Analytical balance: top loading, 300-g capacity.

6.5. Pipettes: Pasteur, disposable, 5.75-in. long by 7.0-mm-o.d.

7. Reagents

7.1. Hydrochloric acid (concentrated, reagent-grade).

7.2. Nitric acid (concentrated, reagent-grade).

7.3. Hydrogen peroxide, 30%.

7.4. Nitric acid, 8 M: Dilute 500 mL HNO_3 to 1 L with H_2O.

8. Calibration and Standards

8.1. Calibrate all determinations against NIST SRM ^{238}Pu and/or ^{239}Pu standards. Refer to method no. CR200 for counting details.

8.2. It will be necessary to find a suitable substrate for the SRM solution since it will be necessary to dry-ash the standard samples to simulate actual samples. Working standards should contain 0.05 to 10 pCi of Pu.

9. Procedure

9.1. Dry-ashing procedure.

9.1.1. Start the Lindberg box furnace at ambient temperature.

9.1.2. Transfer the entire sample from the container used for the direct Phoswich counting procedure to a 400- or 1000-mL beaker, depending on the size of the sample.

9.1.3. Label the beakers with a high-temperature marker. Cover the beakers with aluminum foil and perforate the foil with a quarter-inch glass rod.

9.1.4. Transfer the samples into the box furnace.

9.1.5. After 4:30 PM Friday, set the oven at 400°C and turn it on. Let the ashing proceed over the weekend.

9.1.6. Increase the temperature to 600°C and continue ashing until the ash is light gray (one or two days).

9.1.7. Remove the samples from the oven and cool. Remove and discard the Al foil. Cover the samples with HNO_3, washing down the sides of the beakers during the addition. Add 1.0 mL of ^{242}Pu tracer and, if ^{241}Am is requested, add 1 mL ^{243}Am tracer. Cover the beakers with watch glasses and reflux on low heat overnight. Remove the cover and evaporate to dryness.

9.1.8. Add 10 mL HNO_3 to the residue, warm to dissolve the residue, and add H_2O_2 a little at a time to prevent boilover, until the solution clears up. Evaporate to dryness. Repeat this step until the residue remains white or light yellow when dry.

9.1.9. Add 5 mL HNO_3 and 10 mL HCl to the residue. Cover and store for the anion-exchange step of ER160.

9.1.10. Just before loading the sample on the column in ER160, Step 9.2.1, evaporate the sample until the brown color clears. Cool and add 200 mL 7.2 M HNO_3.

9.2. Resume sample analysis starting at Step 9.2.1 of ER160, Plutonium in Environmental Matrices-Alpha Spectrometry.

10. Proper Waste Disposal Practices

10.1. No waste is generated by this procedure.

URANIUM — DELAYED NEUTRON COUNTING

Analyte: ^{235}U and ^{238}U	**Method No.:** R250
Matrix: Urine, water **Procedure:** Delayed-neutron counting	**Accuracy and Precision:** ^{235}U 96% ±6% (mean ± 1 sigma) ^{238}U 93% ±8% (mean ± 1 sigma)
Minimum Detectable Activity: ^{235}U pCi/L (93% enrichment) ^{238}U μg/L (depleted 0.17% ^{235}U)	**Acceptable Minimum Detectable Activity:** ^{235}U 2 pCi/L ^{238}U 5 μg/L
Effective Date: 01/01/78 to 09/08/93	**Author:** William D. Moss Harold M. Ide

SAFETY NOTE: Before beginning this procedure, read all of the Material Safety Data Sheets for the chemicals listed in Sec. 7. Read Sec. 4.3 of the EM-9 Safety Manual for information on personal protective clothing and equipment.

1. Principle of Method

1.1. Counting the delayed neutrons resulting from fission of uranium after irradiation by thermal neutrons in a nuclear reactor.

1.2. The method is only sensitive to ^{238}U. Uranium-238 can be obtained only if the $^{238}U/^{235}U$ ratio is known or assumed.

2. Sensitivity

2.1. 2 pCi/L ^{235}U at 93% enrichment

2.2. 4 μg/L ^{238}U at 0.17% enrichment.

3. Accuracy and Precision

3.1. Uranium-235. This is the total uranium alpha activity including activity from ^{234}U and ^{238}U, assuming an isotopic distribution in the sample equal to SRM 930 (^{235}U=93.3%, ^{234}U=1.08%, ^{238}U=5.38%; 93% enriched ^{235}U will contain 69 pCi/μg).

Expected:	5.2 pCi/L	13.8 pCi/L	26.1 pCi/L
Measured:	5.1	13.8	24.0
Precision:	±0.4	±0.6	±1.6

3.2. Uranium-238. This is the concentration of ^{238}U assuming that the sample contains 0.17% of ^{235}U and 99.83% of ^{238}U.

Expected:	4.2 μg/L	8.5 μg/L	16.9 μg/L
Measured:	4.1	7.9	16.3
Precision:	±0.3	±0.4	±0.5

4. Interferences

4.1. Samples with greater than 200 μg of normal uranium (depleted, 0.17% ^{235}U) produce greater than 100,000 neutron counts and introduce deadtime losses in the neutron-counting system.

4.2. Plutonium-239 also undergoes fission but is not an interference unless the levels are in excess of 300 pCi/L.

4.3. Samples leaking will cause contamination of the pneumatic transfer system at the reactor.

5. Collection and Storage of Samples

5.1. Samples are collected biweekly in clear, high-impact-plastic, 120-mL containers. Los Alamos National Laboratory, Stock Number LG-3739.

5.2. Add 10 mL of HNO_3 per liter of sample and refrigerate pending analysis. Retain samples until the results are reported.

6. Apparatus

6.1. Heat-sealable pouches: 2-mil, 4-in. by 6-in., 8-oz size, 100 per package. Scotchpak Brand, Kapak Corporation, 5305 Parkdale Drive, St. Louis Park, Minnesota 55416.

6.2. Counting vials: polyethylene, 25-mL, screw cap, Los Alamos National Laboratory, Stock Number LG3713/4II-4S.

6.3. Drying Tray: 8-in. by 12-in. Pyrex pan with a Teflon insert to prevent the pouches from adhering to the Pyrex surface.

6.4. Rack: specially fabricated to support the pouches during evaporation.

6.5. Graduated cylinder: 25-mL.

7. Reagents

7.1. None required.

URANIUM (ISOTOPIC) IN URINE—ALKALINE EARTH PHOSPHATE AND ALPHA SPECTROMETRY

Analyte: ^{234}U, ^{235}U + ^{236}U, and ^{238}U	**Method No.:** R261
Matrix: Urine	**Minimum Detectable Activity:** 0.03 pCi per sample for each isotope
Procedure: Coprecipitation and alpha spectrometry	**Accuracy and Precision:** For natural, enriched, and depleted U, concentrations of ^{234}U and ^{238}U are accurate to better than 2%. ^{235}U + ^{236}U shows a small positive bias due to tailing of the large ^{234}U peak. Isotope ratios for normal and depleted U are generally accurate to better than 3%. Precision varies with the level of activity.
Acceptable Minimum Detectable Activity: 0.10 pCi/L	
Effective Date: 07/01/91	**Authors:** Steve Goldstein Gloria Martinez

SAFETY NOTE: Before beginning this procedure, read all of the Material Safety Data Sheets for the chemicals listed in Sec. 7. Read Sec. 4.3 of the EM-9 Safety Manual for information on personal protective clothing and equipment. Read Sec. 11 of this procedure and Source Materials 12.4 to 12.8 for proper waste disposal practices.

1. Principle of Method

1.1. Samples are equilibrated overnight with ^{232}U tracer in 3% nitric acid at 120°C.

1.2. Uranium is coprecipitated with calcium phosphate. The precipitate is dissolved in 8 M HCl and the uranium is adsorbed onto AG1-X8 anion-exchange resin.

1.3. Uranium is eluted from the column with a 0.36 M HCl + 0.01 M HF solution.

1.4. Uranium is electrodeposited on a stainless-steel disk.

1.5. The alpha activity is determined by alpha pulse-height analysis. Uranium-232 tracer is used to correct for chemical loss.

2. Sensitivity

2.1. Sensitivity is limited by the counter background obtained from analyses of chemistry blanks. On the 112-alpha counting system, chemistry blanks for

counting periods of 70,000 s are: ^{234}U = 4 counts, ^{235}U = 3 counts, and ^{238}U = 2 counts.

2.2. For routine measurements with a 70,000-s counting period, an average background per isotope of 3 counts, a chemical recovery of 60%, and a counting efficiency of 22%, the MDA is 0.03 pCi/sample for each isotope of uranium.

3. Accuracy and Precision

3.1. "Blank" urine spiked with a solution prepared from NIST SRM 4321, a natural U standard solution. Expected values for absolute isotopic concentrations are known to 0.5%. Precision is 2σ of the mean of 6 replicates.

	^{234}U	^{235}U	^{238}U	$^{234}U/^{238}U$	$^{235}U/^{238}U$
		(values in pCi)			
Measured value	4.649	0.237	4.870	0.953	0.0486
Uncertainty	0.185	0.030	0.150	-	-
Expected value	4.683	0.223	4.863	0.963	0.0460
Uncertainty	0.020	0.001	0.019	-	-
Accuracy	99.6%	105.6%	100.2%	99.0%	105.6%
Precision	±3.2%	±13.6%	±3.8%	5.0%	14.1%

3.2. "Blank" urine spiked with a solution prepared from NIST SRM U-930, a 93% enriched ^{235}U standard. Expected values for absolute isotopic concentrations are known to 10%. Precision is 2σ of the mean of 4 replicates. The positive bias on the abundance of $^{235}U + ^{236}U$ is due to the low-energy tail of the large ^{234}U alpha peak.

	^{234}U	$^{235}U+^{236}U$	^{238}U	$^{234}U/^{235}U+^{236}U$
		(values in pCi)		
Measured value	8.700	0.327	0.023	26.61
Uncertainty	0.140	0.018	0.012	-
Expected value	8.532	0.275	0.011	31.03
Uncertainty	0.853	0.028	0.001	-
Accuracy	102.0%	119.0%	-	85.8%
Precision	±1.6%	±5.5%	-	5.7%

3.3. "Blank" urine spiked with a depleted uranium (0.17% ^{235}U) solution prepared from NIST SRM U-005 and NIST SRM U-0002. Expected values for absolute isotopic concentrations are known to 1%. Precision is 2σ of the mean of 4 replicates.

	^{234}U	$^{235}U+^{236}U$	^{238}U	$^{234}U/^{238}U$	$^{235}U+^{236}U/^{238}U$
			(values in pCi)		
Measured value	0.598	0.059	4.035	0.148	0.0146
Uncertainty	0.024	0.010	0.153	-	-
Expected value	0.600	0.057	3.954	0.152	0.0144
Uncertainty	0.006	0.001	0.040	-	-
Accuracy	99.7%	103.5%	102.0%	97.7%	101.3%
Precision	4.0%	16.9%	3.8%	5.5%	17.4%

3.4. Comparison of precipitation vs. total matrix destruction (dry ashing) of a metabolized uranium sample. Listed values are the averages of two determinations for each method.

	^{238}U	
Measured value, precipitation	0.835	pCi/kg
Measured value, ashing	0.816	pCi/kg

4. Interferences

4.1. Neptunium(V,VI) and Pu(VI) are adsorbed along with U(VI) onto the anion-exchange resin in 8 M HCl and desorbed in dilute HCl. Consequently, ^{239}Pu and ^{240}Pu at 5.15 MeV are possible interferences on the ^{232}U peak, and additional chemistry is required to remove these isotopes if abundances are high (pCi levels). Neptunium-237 is also a potential interference at 4.8 MeV on the ^{234}U alpha peak.

4.2. The anion-exchange chemistry will not separate iron(III) from uranium. Because the iron will electroplate with the uranium and potentially degrade the alpha spectrum, samples with high levels of iron should be treated to remove iron by using a somewhat more elaborate ion-exchange separation involving sulfuric acid. See Step 9.4.9.

4.3. Since the daughters of ^{232}U, (^{228}Th, ^{224}Ra, etc.) will grow into the sample after chemistry, electrodeposition and counting should not be delayed for more than 10 days after ion exchange.

5. Collection and Storage of Samples

5.1. Samples are collected biweekly in square 500-mL polyethylene containers, Nalgene 2114-0016.

5.2. Samples are refrigerated until ready for analysis.

6. Apparatus

6.1. Alpha spectrometer: equipped with 300-mm^2 PIPS silicon surface barrier detectors. 512 channels/detector, at 20 keV/channel to provide adequate resolution of ^{235}U and ^{238}U.

6.2. Beakers: Pyrex, 100-mL.

6.3. Coin holders: Grisby Bros., 817 N.E. Madroma, Portland, Oregon 87211, to hold disks after plating.

6.4. Electrodeposition apparatus: dc power supply to provide 600 mA of regulated current to each electrolytic cell.

6.5. Electrolytic cell: polyethylene cell body 2.22-cm o.d. by 9.0-cm long threaded on one end, with a stainless steel cap threaded to fit and hold 1.59-cm-diam stainless-steel disk in place.

6.6. Graduated cylinders: 10-, 50-, 1000-, and 4000-mL.

6.7. Hot plates: 1000-W adjustable to 200°C.

6.8. Ion exchange columns: Bio-Rad Econo-Pac disposable columns with bed volume of 20 mL, fitted with a Nalgene 80-mm polyethylene powder funnel (Nalgene # 4252-0080) as a 100-mL reservoir.

6.9. Teflon bottles: wide-mouth, 1000-mL, VWR # 16128-535.

6.10. Stainless-steel disks: 1.59-cm (5/8 in.) disk, fabricated from 15- to 20-mil 316 stainless steel, cold rolled or No. 4 finish.

6.11. Fume hood with sink.

6.12. Polyethylene wash bottles: 500-mL and 1-L.

6.13. Filter paper: 15.0-cm, Whatman 541.

6.14. Dispensette bottles: 10- and 20-mL.

6.15. Eppendorf pipettor and pipette tips: 200-, 600-, and 1000-μL.

6.16. pH Paper: Colorphast, pH 0-14, EM Reagents.

6.17. Centrifuge: IEC Clinical Model, with fixed-angle rotor to hold six 50-mL tubes.

6.18. Centrifuge tubes: disposable, graduated, conical 50-mL, with attached screw caps, VWR # 21008-474.

6.19. Watch glass: 80-mm diam.

6.20. Transfer pipettes: 1-mL graduation, SAMCO #222.

6.21. Polyethylene dropping bottle: 125-mL capacity.

7. Reagents

7.1. Nitric acid (concentrated, 70%).

7.2. ^{232}U tracer (2-4 pCi/mL). Prepared from NIST SRM 4324 and calibrated using NIST SRM 4321 natural U standard solution.

7.3. Calcium nitrate solution. Dissolve 453 g of $Ca(NO_3)_2 \cdot 4H_2O$ and dilute to 450 mL with distilled water. Filter the solution through Whatman 541 filter paper.

7.4. Phosphoric acid (85%, specific gravity 1.70).

7.5. Hydrogen peroxide solution (30%).

7.6. Ammonium hydroxide solution (concentrated, 28-30%).

7.7. Hydrochloric acid (concentrated, 36-38%).

7.8. Hydrochloric acid (8 M). Prepare 4 L by adding 2.667 L concentrated hydrochloric acid to 1.333 L distilled water.

7.9. Bio-Rad anion exchange resin (AG1-X8, 100-200 mesh, chloride form). Add 500 mL of 0.6 M HCl to one pound of resin in a 1-L polyethylene bottle, shake thoroughly, allow to settle, and decant the solution along with the fines. Repeat 5 times.

7.10. Eluting solution (0.36 M HCl-0.01 M HF). Dilute 120 mL concentrated HCl and 920 mg ammonium bifluoride to 4 L with distilled water.

7.11. Sulfuric acid (9 M). Mix equal volumes of concentrated sulfuric acid (95-98%) and distilled water.

CAUTION: Dilution is highly exothermic and should be done in Pyrex. Store in a 500-mL polyethylene bottle.

7.12. Thymol blue solution. Mix 0.2 g of thymol blue powder with 21.5 mL of 0.02 M NaOH and dilute to 500 mL with distilled water.

7.13. Sulfuric acid (0.18 M). Add 5 mL of concentrated sulfuric acid to 495 mL of distilled water. Store in a 500-mL polyethylene bottle.

7.14. Sodium hydroxide (25%).

7.15. 8 M Hydrochloric acid - 3 M sulfuric acid solution. Add 667 mL of hydrochloric acid and 166.7 mL of sulfuric acid to a 1-L flask containing 167 mL of water.

7.16. Acetone.

8. Calibration and Standards

8.1. Uranium-232 tracer.

8.1.1. Quantitatively prepare a ^{232}U tracer equal to approximately 2-4 pCi/mL from NIST standard reference material, NIST-SRM-4324. Dilute 2 g of NIST-SRM-4324 solution to 1000 mL using 2 M nitric acid (prepared from distilled nitric acid and distilled water).

8.1.2. Quantitatively prepare a ^{238}U standard solution equal to approximately 20 pCi/g from NIST standard reference material, NIST-SRM-4321. Dilute 3 g of SRM 4321 solution to 1000 mL using 2 M nitric acid (prepared from distilled nitric acid and distilled water).

8.1.3. Prepare six mixtures of the ^{232}U tracer and ^{238}U standard solution and take to dryness with 5 mL of concentrated nitric acid. Pass through a small 1-mL anion-exchange column to remove daughter isotopes from ^{232}U and electrodeposit as described in Section 9.5. The ^{232}U tracer concentration measured from calibration should equal the expected value based on NIST certification.

8.2. Calibration of the alpha spectrometer.

8.2.1. The alpha secondary standards contain the isotopes ^{241}Am, ^{239}Pu, and ^{242}Pu and are standardized in a gas flow proportional counter using the NIST ^{238}Pu (NIST-SRM-4906-B15) primary standard.

8.2.2. Calibration counts are taken for 1020 s.

8.2.3. Background counts are accumulated for each energy spectrum for each detector for 70,000 s, using plates containing procedural blanks.

8.2.4. Standard plates are prepared from NIST-SRM-4321, a natural uranium isotopic standard, to check the linearity of the alpha spectrometer in the lower energy range of the uranium isotopes (4.3 to 5.3 MeV). For each of 16 plates, 1 mL of the diluted SRM-4321 solution from Step 8.1.2 is taken to dryness and electrodeposited, producing 16 standard plates with approximately 20 pCi each of ^{234}U and ^{238}U and a known $^{234}U/^{238}U$ activity ratio of 0.963.

9. Procedure

9.1. Sample weighing.

9.1.1. Tare weigh the 2000 g top-loading balance with an empty sample kit on the balance. (Make sure the balance is level and in calibration).

9.1.2. Place the sample kit on the balance. Record the sample weight in grams in the chemistry notebook.

9.2. Tracer-sample equilibration.

9.2.1. Shake the sample bottle to loosen any precipitate and pour the entire sample into a clean 1-L Teflon bottle.

9.2.2. Completely rinse each sample bottle with two 10-mL aliquots of 8 M nitric acid. Add the acid wash to the sample.

9.2.3. <u>This is the most important step</u>. Carefully add exactly 1 mL of ^{232}U tracer solution (4 pCi/mL).

9.2.4. Cap loosely and place on a hot plate at 120°C overnight to allow tracer and sample to equilibrate.

9.3. Calcium phosphate precipitation.

9.3.1. Remove the bottle from the hot plate.

9.3.2. Add 400 μL of calcium nitrate solution (68 mg Ca).

9.3.3. Add 1 mL of concentrated phosphoric acid.

9.3.4. Add 20 mL of hydrogen peroxide solution (30%).

9.3.5. Add 10 mL of concentrated ammonium hydroxide solution. Cap and shake sample for 5 s.

9.3.6. Check the pH of the solution using color-sensitive pH paper. The solution should be pH 8-9 and a white precipitate should be apparent.

9.3.7. If the pH is <8, add 1 mL of concentrated ammonium hydroxide, shake, and recheck the pH.

9.3.8. If the pH is >9, add 1 mL of concentrated nitric acid, shake, and recheck the pH.

9.3.9. Repeat Steps 9.3.7 and 9.3.8 until the pH is adjusted to 8-9.

9.3.10. Cap and shake the bottle again for 20 s.

9.3.11. Loosen the cap and let the precipitate settle for at least 4 h.

9.3.12. Remove the cap and carefully and slowly decant the supernatant. The remaining slurry should be approximately 100 mL in volume.

9.3.13. Shake the slurry and transfer it to new 50-mL centrifuge tubes. Place four properly balanced and tightly sealed centrifuge tubes in the centrifuge. Centrifuge at speed 7 for 1 min. Remove the tubes and decant the supernatant.

9.3.14. Repeat 9.3.13 until all sample has been centrifuged.

9.3.15. Add 25 mL of concentrated HCl to the centrifuge tube and transfer the precipitate to a Teflon bottle. Rinse the centrifuge tube with two 25-mL aliquots of 8 M HCl and transfer to the Teflon bottle. Add 1 mL of H_2O_2 to the solution.

9.3.16. Cap the Teflon bottles, swirl, and let stand on the hotplate at 120-150°C overnight.

9.4. Anion-exchange separation.

9.4.1. Securely insert a clean 80-mm funnel into a new disposable Econo-column. Mark the 10-mL level on the column with a pen and break off the column tip. Rinse the column and funnel with distilled water.

9.4.2. Insert the column into a column holder and fill the column with AG1-X8, 100-200 mesh, anion-exchange resin to the 10-mL level. Rinse any resin from the upper part of the column or funnel to the resin bed using distilled water. The resin column should maintain a constant level at 10 mL after rinsing with water.

9.4.3. Condition the column with 50 mL of 8 M hydrochloric acid.

9.4.4. Insert a folded filter paper into the funnel.

9.4.5. Add sample (75 mL) to the column through the filter paper and allow to drain.

9.4.6. Rinse the bottle with 10 mL of 8 M HCl, add it to the column, and allow to drain.

9.4.7. Carefully remove the filter paper. Wash the column with three 50-mL aliquots of 8 M HCl and allow to drain.

9.4.8. For samples with low levels of iron, proceed to Step 9.4.10.

9.4.9. Wash the column with 10 mL of 8 M hydrochloric acid-3 M sulfuric acid solution and allow to drain. Wash the column with 30 mL of 0.18 M sulfuric acid solution and allow to drain.

9.4.10. Elute the U with two 50-mL aliquots of eluting solution (0.36 M HCl-0.01 M HF). Collect in a clean 100-mL Pyrex beaker.

9.4.11. Place the beaker on a hotplate at 120-150°C and take to dryness overnight.

9.5. Electrodeposition.

9.5.1. Add 20 mL of concentrated nitric acid to the sample residue. Cover with a clean watch glass and reflux for 4 h on a hotplate set at 150°C.

9.5.2. Remove the watch glass and take the solution to dryness. The sample should be colorless.

9.5.3. Add 0.6 mL of 9 M sulfuric acid. Heat on a hotplate at 200°C until strong fumes are produced. Remove the beaker from the hotplate and let cool for 10 min.

9.5.4. Rinse the sides of the beaker with 3 mL of distilled water.

9.5.5. Add 2 drops of thymol blue indicator. The solution should turn purple.

9.5.6. Add 15% ammonium hydroxide (dilute concentrated reagent with an equal volume of water) dropwise until the solution turns salmon pink to straw yellow.

9.5.7. Assemble the electrodeposition cell. Peel the backing from a stainless steel disk, wash the disk with acetone, place the disk in the bottom depression of the cap, tightly screw a new polyethylene cell into the cap, and rinse with distilled water. Check for leaks and discard the water.

9.5.8. Add the sample solution to the cell. Rinse the sample beaker with three 1.0-mL aliquots of 0.18 M sulfuric acid and add the wash to the cell.

9.5.9. Carefully swirl the cell to homogenize the solution. Readjust the pH by adding drops of ammonium hydroxide until the solution again turns salmon pink to straw yellow (4-5 drops).

9.5.10. Rinse the electrodes on the electrodeposition rack with distilled water and dry with a towel.

9.5.11. Insert the cells into the electrodeposition rack. Cover each cell with a plastic cover.

9.5.12. Turn on the main switch of the electrodeposition unit. Connect the cathode lead to the cell cap. Set current to 600 mA.

9.5.13. Electroplate for 2.5 h.

9.5.14. Add 1 mL of 25% NaOH to the cell, and after 1-2 minutes, disconnect the cell.

9.5.15. Pour the solution out of the cell and disassemble the cell. Wash the stainless steel disk with pH = 8 water. Do not touch the surface of the disk.

9.5.16. Dry the disks in the coin holder on a hot plate. Write the sample number on the back of the disk with a marking pen and submit to the count room for alpha spectrometry.

10. Calculations

10.1. Count samples for 70,000 s.

10.2. Detector counting efficiency determination.

10.2.1. The counting efficiency of the counter for a standard run is given by:

$$E = \frac{\left(\frac{C_s}{T_s} - \overline{B}_s\right)}{A_s} ,$$

where E = counting efficiency in the peak of interest (counts per disintegration),

C_s = gross counts for the standard,

T_s = counting time for standard (min),
$\overline{B}_s$ = background count rate in the peak of interest, and
A_s = activity in the standard (dis/min).

10.2.2. The average counter efficiency is calculated from a running average of the last n values of individual E determinations.

$$\overline{E} = \frac{\sum_{i=1}^{n} E_i}{n} ,$$

where $\overline{E}$ = the running average of the counting efficiency,
n = the number of measurements used for calculation, and
E_i = the individual counting efficiencies from Step 10.2.1.

10.3. Background determination. There will be different backgrounds for the tracer (B_t), and the analyte (B_x) peaks, but the calculations will be the same.

10.3.1. Background count rate is:

$$B = \frac{C_b}{T_b} ,$$

where B = background count rate (counts/min),
C_b = gross counts of background, and
T_b = count time of the background (min).

10.3.2. Running average background count rate is calculated by:

$$\overline{B} = \frac{\sum_{i=1}^{n} B}{n} ,$$

where B = background count rate,
$\overline{B}$ = average background count rate, and
n = number of values used.

10.3.3. Standard deviation for the average background count rate is calculated by:

$$SD(\overline{B}) = \overline{B} \times \sqrt{\frac{\sum_{i=1}^{n} (B - \overline{B})^2}{(n - 1)}} ,$$

where $SD(\overline{B})$ = standard deviation of the running average of the background,
$\overline{B}$ = average background from Step 10.3.2,
B = individual background count rate, and
n = number of values used.

10.3.4. The MDA of activity for low background instruments is determined by:

$$MDA = \frac{[4.65 \times SD(B_x)] + 3}{K \times T_x} ,$$

where MDA = minimum detectable amount (dis/min),
$SD(B_x)$ = standard deviation of the background count rate (counts/min),
K = constant in sample units, and
T_x = count time.

10.4 Tracer recovery.

10.4.1. The tracer recovery is calculated from:

$$R_t = \frac{C_t}{T_t \times E \times A_t} ,$$

where R_t = fraction of the tracer recovered,
C_t = total counts in the tracer peak,
T_t = count time for the tracer (min),
E = counting efficiency, and
A_t = tracer added to the sample (dis/min).

10.4.2. Standard deviation of the tracer recovery is:

$$SD(R_t) = R_t \times \sqrt{\frac{\frac{C_t}{T_t^2} + SD(B_t)}{\left(\frac{C_t}{T_t} - \overline{B}_t\right)^2} + \frac{\sigma_{A_t}^2}{A_t^2}} \quad ,$$

where $SD(R_t)$ = standard deviation of the tracer recovery,
R_t = tracer recovery fraction,
C_t = counts in the tracer peak,
T_t = count time (min),
$SD(B_t)$ = standard deviation of the background in the tracer peak,
B_t = the background in the tracer peak,
σ_{A_t} = standard deviation of the known value of A_t, and
A_t = activity of the standard.

10.5. Sample activity.

10.5.1. The activity in the samples is given by:

$$A_x = \frac{\left(\frac{C_x}{T_x} - \overline{B}_x\right)}{\overline{E} \times R_t} \quad ,$$

where A_x = sample activity (dis/min per sample),
C_x = gross counts of sample,
T_x = count time of sample (min),
$\overline{B}_x$ = background count rate (counts/min),
$\overline{E}$ = average counting efficiency, and
R_t = tracer recovery.

For $^{235}U + ^{236}U$;

$$A_x = \frac{\left(\frac{C_x}{T_x} - \overline{B}_x\right)}{\overline{E} \times R_t} \; 1.11 \quad ,$$

where the factor 1.11 corrects for ^{235}U counts in the ^{238}U region of interest.

For ^{238}U;

$$A_{238} = \frac{\left(\frac{C_x}{T_x} - \overline{B}_x\right)}{\overline{E} \times R_t} - 0.10\, A_{235+236} \quad ,$$

where the factor 0.10 corrects for ^{235}U counts in the ^{238}U region of interest.

10.5.2. The standard deviation of the activity in the sample is given by:

$$SD(A_x) = |A_x| \times \sqrt{\frac{\frac{C_x}{T_x^2} + SD^2(\overline{B}_x)}{\left(\frac{C_x}{T_x} - \overline{B}_x\right)^2}} \quad ,$$

where $SD(A_x)$ = uncertainty of sample activity (dis/min),
$|A_x|$ = absolute value of A_x from Step 10.5.1,
C_x = gross counts of sample,
T_x = sample count time,
$\overline{B}_x$ = background count rate, and
$SD(\overline{B}_x)$ = standard deviation of the background.

10.6. Calculation to correct the radiometric measurement into the required form for final reporting.

10.6.1. Reported activity.

$$R_x = \frac{A_x}{K \times Q} ,$$

where R_x = sample activity in correct units for reporting (pCi/L),
A_x = sample activity (dis/min per sample),
K = conversion factor (2.22 pCi per dis/min), and
Q = sample quantity analyzed.

10.6.2. Propagated uncertainty of the reported activity is calculated by:

$$U_x = |R_x| \times \sqrt{\frac{SD\ (A_x)^2}{A_x^2} + \frac{SD\ (R_t)^2}{R_t^{\ 2}} + \frac{SD\ (Q)^2}{Q^2}} ,$$

where U_x = propagated uncertainty of the reported activity,
R_x = reported activity,
$SD\ (A_x)$ = standard deviation of sample activity measurement,
$SD(R_t)$ = standard deviation of the tracer recovery,
$SD\ (Q)$ = standard deviation of the sample quantity aliquoted,
A_x = sample activity,
R_t = tracer recovery, and
Q = sample quantity taken for analysis in reporting units.

11. Proper Waste Disposal Practices

11.1. Liquid chemical and radioactive waste.

11.1.1. All liquid chemical and radioactive wastes may be disposed of in standard acid drains.

11.2. Hazardous waste.

11.2.1. Acetone-contaminated wipers should be treated as hazardous waste and stored in a hazardous waste satellite storage area, according to Standard Operating Procedure SOP 3, "Handling and Disposal of Hazardous Materials," and Administrative Requirement AR10-3, "Hazardous and Mixed Waste."

11.2.2. The satellite storage area should be properly identified. Wipers should be stored in a sealed can, properly labeled as hazardous waste and the contents identified.

11.2.3. When 80% capacity is reached, a waste profile is completed and the waste management group (EM-7) is contacted for disposal.

11.3. Solid radioactive waste.

11.3.1. Sample planchets are stored for approximately one year. The planchets are then disposed of in the low-level radioactive waste according to SOP 2.

11.3.2. A waste profile form should be completed and forwarded to the EM-9 radioactive-waste coordinator for each addition of waste to the container.

11.4. Biological waste.

11.4.1. Excess urine is disposed of in standard acid drains according to Standard Operating Procedure SOP 4, "Handling Human Biological Fluids and Tissues."

11.4.2. After disposal of urine, the sink should be washed with 4 L of Clorox solution containing 50-60 mL of bleach and flushed with water.

11.4.3. The acid-rinsed urine specimen bottles should be rinsed with water and placed in the regular trash.

12. Source Material

12.1. L. A. Currie, "Limits for Qualitative Detection and Quantitative Determination," *Anal. Chem.* **40**, 586-593 (1968).

12.2. N. A. Talvitie, "Electrodeposition of Actinides for Alpha Spectrometric Determination," *Anal. Chem.* **44**, 280-283, (1972).

12.3. L. A. Currie, G. M. France III, and P. A. Mullen, "Radiochemical Determination of Uranium of Low Activity," *Health Phys.* **10**, 751-755, (1964).

12.4. "Hazardous and Mixed Waste," Administrative Requirement 10-3, in Environmental Chemistry Group: Environment, Safety, and Health Manual, Appendix V (most recent edition).

12.5. "Disposal of Solid Radioactive Waste from EM-9 Group Areas at TA-59, OH-1," SOP 2, in Environmental Chemistry Group: Environment, Safety and Health Manual, Appendix III (most recent edition).

12.6. "Handling and Disposal of Hazardous Materials," SOP 3, in Environmental Chemistry Group: Environment, Safety, and Health Manual, Appendix III (most recent edition).

12.7. "Handling Human Biological Fluids and Tissues," SOP 4, in Environmental Chemistry Group: Environment, Safety, and Health Manual, Appendix III (most recent edition).

Revisions or additions to the procedure are marked (▒▒▒▒). Where a section heading is marked, the entire section has been revised.

CONTENTS

Preface IH-5

Acknowledgments IH-7

Abstract IH-9

Suggested Handling of Emergency Samples IH-11

The page numbering convention used in this manual consists of the specific procedure number (shown at left in list below) followed by the page number for that procedure. Thus, IH110-2 is page two of procedure IH110. The right column in the list below gives each procedure's status or effective date.

Industrial Hygiene Chemistry Analytical Techniques

Industrial Hygiene Analytical Procedures

IH100 Aliphatic Amines in Air ..... Retired

IH110 Anions by Ion Chromatography ..... Retired

IH120 Aromatic Amines in Air ..... Retired

IH130 Aromatic Amines—A Chemical Spot Test ..... Retired

IH135 Arsenic and Gallium on Air Filters—IENA ..... Retired

IH140 Asbestos Fibers in Air ..... Retired

IH150 Beryllium on Air Filters 05/93

IH155 Breathing Air 04/93

IH160 Cadmium in Urine—Flame AA ..... Retired

IH161 Cadmium in Urine—Flameless AA ..... Retired

IH170 Cholinesterase in Serum ..... Retired

IH180	N,N-Dimethylaminoazobenzene—A Chemical Spot Test	Retired
IH185	Ethanol in Air	09/93
IH190	Fluoride in Urine	Retired
IH200	Formaldehyde in Air—Alumina Tube Collection	Retired
IH210	Formaldehyde in Air—Impinger Collection	Retired
IH211	Formaldehyde in Air, Water, or Solids	09/93
IH214	Halogens and Sulfur in Liquids—NAA	Retired
IH220	Metals on Air Filters—NIOSH PAT Samples	03/93
IH230	Mercury in Urine	Retired
IH240	Metals—General Procedure	Retired
IH250	Aromatic Nitro-Compounds—A Chemical Spot Test	Retired
IH260	Organic Solvents in Air—General Procedure	09/93
IH270	Organic Solvents—NIOSH PAT Samples	09/93
IH273	Perchlorate in Waters—Colorimetric	09/92
IH274	Petroleum Hydrocarbons, Total Recoverable in Soil	04/93
IH275	Petroleum Hydrocarbons, Total Recoverable in Water	04/93
IH280	Phenol in Urine—Gas Chromatography	Retired
IH290	Phenol in Urine—HPLC	Retired
IH300	Phenol in Water—HPLC	Retired
IH310	Polychlorinated Biphenyls (PCBs) in Air	Retired
IH320	Polychlorinated Biphenyls (PCBs) in Oil	Retired
IH321	Polychlorinated Biphenyls (PCBs)—Screening by NAA	Retired
IH330	Polynuclear Aromatic Hydrocarbons in Air—HPLC	09/93

IH340 Polynuclear Aromatic Hydrocarbons in Air—GC 04/93

IH345 Thallium in Urine—ICPMS 10/90

Trace Metals in Air Filters ..... In Progress

IH350 Trichloroacetic Acid in Urine ..... Retired

Instrument Procedures

IH800 Gas Chromatography and Mass Spectrometry—
General Procedure ..... Retired

IH810 Infrared Spectroscopy—General Procedure ..... Retired

SUGGESTED HANDLING OF EMERGENCY SAMPLES

1. Introduction

Rapid and accurate response to emergency situations related to industrial hygiene is a primary responsibility of the industrial hygiene chemist. It is necessary to provide the information needed to help make decisions regarding the best response to an emergency situation. For this reason the analysis of emergency samples must be carried out using an organized plan that avoids unnecessary and unfruitful effort. This outline is presented as a guide to assist in planning these analyses, not as a plan that must be rigorously followed.

This guide presupposes that the identity of the sample(s) is completely unknown. If one is analyzing for a specific compound or substance, it is better and quicker to go directly to a procedure specifically for that material.

2. Notification of an Emergency Condition

The analyst(s) will usually be notified of an emergency before the samples arrive. At this time, the situation surrounding the incident should be discussed with those responding to the emergency, including all affected analysts if possible, in an effort to obtain as much information as possible concerning the conditions in the vicinity of the incident, the chemicals involved in the incident, and the number and types of samples to expect. Information sufficient to handle the situation can be obtained at this time, and the more complete information needed to document the incident can be obtained later. The industrial hygiene chemist should provide guidance concerning the method of sampling to ensure that the sampling will be adequate to answer the questions asked. Analysts should be given instructions and should get all necessary instruments and equipment ready before the samples arrive.

3. Receipt of Samples

3.1. Chain of Custody. For legal purposes, it is imperative that the chain of custody of the samples be documented. Obtain a completed Sampling Data Sheet with the samples. Discuss the incident with the person taking and submitting the samples to obtain any additional clues to the samples' identity that may have been observed during the sampling.

3.2. Approvals. It is the responsibility of the industrial hygienist to obtain approval from the HS-5 Group Office for emergency priority and to have this approval reviewed by the EM-9 Group Office, but work on the samples must not be delayed while awaiting this approval. It is better to downgrade efforts in the event that the group offices decide that the situation does not warrant emergency priority than to delay the analysis in a true emergency.

3.3. Radioactive Samples. If there is any indication that the samples may be radioactive, they should be checked for radioactivity before they are accepted. The first step in this should be HS-1 monitoring if possible. Then, if questions remain, an additional check for gross radiation can be requested from the count room after the samples arrive. HS-1 monitoring equipment is less sensitive than that of EM-9 and it would take little radioactivity to contaminate TA-59 to the point where it would be difficult for the Radiochemistry or Tissue Sections to continue their work. If the samples are

radioactive, special precautions must be taken to protect the analyst and to prevent any radioactive contamination of the building.

3.4. Sample Documentation. Have the samples logged into the sample management data base to document their receipt and their assignment to an analyst.

3.5. Suggested Analytical Methods. The sample types by category and the sections of this document that discuss the suggested methods of analysis are:

Bulk Solids	Section 4
Filters	Section 5
Bulk Liquids	Section 6
Adsorption Tubes & Badges	Section 7
Gaseous Samples	Section 8

4. Analysis of Bulk Solids

4.1. Infrared Spectroscopy. Prepare a KBr pellet and run an infrared spectrum. If the spectrum is not sufficient to identify the material, proceed to Step 4.2 for materials that appear to be organic or to Step 4.3 for those that appear to be inorganic.

4.2. Organic Samples. If the sample appears to be organic, dissolve a portion in an appropriate solvent, such as carbon disulfide, hexane, methylene chloride, or methanol. Run a GC/MS analysis of the solution. Good operating conditions to employ for substances whose identity is completely unknown, assuming that a 30-meter SE-54 fused-silica capillary column or the equivalent is in the instrument, are:

- GC oven program of 35-270°C at 15°C/min, holding at 270°C for the remainder of the run.
- Scan start delay of 3.7 min.
- Injector temperature of 300°C.
- Scan range of 35-400 amu.
- Injection volume of 2 μL.
- Injection time of 30 s.

4.3. Inorganic Samples. If the sample appears to be inorganic, dissolve a portion of the sample in water or dilute nitric or hydrochloric acid. If it dissolves, analyze the resulting solution for metals by ICP-MS. If the sample does not dissolve, a metals analysis can be obtained from HS-5 using their x-ray fluorescence spectrometer attachment to the electron microscope.

If the sample dissolves in water and the anion is not apparent from the infrared spectrum, analyze for anions by ion chromatography or for cyanide by colorimetry.

5. Analysis of Filter Samples

5.1. Specific Metals. If the analysis is for specific metals, analyze by atomic absorption. Alternatively, a metals scan can be performed using ICP-MS techniques. Both analyses require acid dissolution of the filter.

5.2. Organic Compounds. If organics are of interest, extract the filter with an appropriate solvent, such as hexane, methylene chloride, or methanol, and analyze the resulting solution by GC/MS. The operating conditions listed in Section 4.2 would provide a good starting point.

5.3. GC/MS and AA on the Same Filter. If care is taken in the extraction, it is sometimes possible to do both GC/MS and AA on the same filter to give qualitative results.

Carefully extract the filter to remove the organics without dislodging the insolubles. This can usually be accomplished in a Buchner funnel such as those sold by Gelman or Millipore for use with membrane filters. Because it is difficult to assure complete extraction of the organics or complete retention of insolubles, quantitative results following this extraction would be suspect.

6. Analysis of Bulk Liquids

Run an infrared spectrum. If the spectrum is not sufficient to identify the material and the liquid is an aqueous solution, proceed to Section 6.1; if the liquid is an organic, proceed to Section 6.2.

6.1. Aqueous Solutions.

Analyze for specific metals in aqueous solutions by ICP-MS. Analyze for common anions in aqueous solutions by ion chromatography. Both methods require little pretreatment of the sample. Cyanide analysis can be performed by colorimetry.

Volatile organics in aqueous solution, if present in relatively high concentrations, can be analyzed by treating the headspace over the liquid as a gaseous sample, Section 8.2. Analyze for volatile organics at low concentrations in water by purge-and-trap methods.

For less volatile neutral or basic organic materials in aqueous solutions, make the sample basic to pH 10 (as tested with Hydrion paper) with KOH and extract it with an appropriate solvent, such as methylene chloride or hexane. Dry the extract with anhydrous sodium sulfate and concentrate the extract to a small volume using a Kuderna-Danish evaporator. This solution is now treated as a nonaqueous liquid sample, Section 6.2.

For less volatile acidic organic materials in aqueous solution, make the sample acidic to pH 4 (as tested with Hydrion paper) with sulfuric acid and extract it with methylene chloride. Dry the extract with anhydrous sodium sulfate and concentrate the extract to a small volume using a Kuderna-Danish

evaporator. This solution is now treated as a nonaqueous liquid sample, Section 6.2.

For samples whose identity is completely unknown and where it may be desirable to look for more than one type of organic, the best sequence is (1) purge and trap for volatiles, (2) extract for basic and neutral compounds, and (3) extract acidic compounds.

6.2. Nonaqueous Liquids.

Run a GC/MS analysis for nonaqueous liquid samples. Good operating conditions to employ for a sample whose identity is not known (using a 30-m SE-54 fused-silica capillary column or the equivalent) are:

- GC oven programmed from 35 to 270°C at 10°C/min, holding at 270°C for the remainder of the run.
- Injector temperature of 300°C.
- Scan range of 35-400 amu.
- Injection volume of 0.05 μL using a Minijector (Precision Sampling Corp., Baton Rouge, Louisiana.)
- Scan start delay of 0.0 s.
- Injection time of 30 s.

To analyze for solutes in a known, highly volatile solvent like methylene chloride, use a 2.0 μL injection volume and turn the mass spectrometer off at approximately 2.5 minutes and back on at approximately 3.7 minutes to allow for venting of the solvent without aborting the run. These times may need adjusted for the specific solvent.

To analyze for solutes in an unknown solvent, make a first run with an injection volume of 2.0 μL and a scan start delay of 0.0 min. The instrument will probably shut the run down automatically when the solvent elutes. If so, make a second run with an injection volume of 2.0 μL and turn the mass spectrometer off a few seconds before the solvent peak came off in the first run and back on approximately one minute later to allow for venting of the solvent without aborting the run.

CAUTION: When the instrument automatically shuts down due to excess solvent, the remainder of the material injected will remain in the column. It is best to heat the oven up to approximately 280°C for at least 15-20 minutes before making a subsequent run, to ensure a clean column.

7. Analysis of Adsorption Tubes and Badges

Elute the adsorbent with an appropriate solvent. The adsorbent will usually be charcoal and should be extracted using 1.0 mL. of carbon disulfide. Run the resulting solution on the GC/MS using the conditions given in Section 6.2.

8. Analysis of Gaseous Samples

8.1. Infrared Spectroscopy. If there is sufficient sample (more than 7 liters is best), obtain an infrared spectrum using the 20-m cells. If obtaining the IR spectrum will use up all the sample, first complete the chromatogram as directed in Section 8.2 and then obtain the spectrum on the remaining sample. After the spectrum is obtained, treat the contents of the 20-m cell as described in Section 8.3.

8.2. GC/MS Chromatography. Obtain a GC/MS chromatogram of the gaseous sample. Assuming that a 30-m SE-54 fused-silica capillary column or the equivalent is in the instrument, good starting conditions are:

- GC oven program of 35-270°C at 15 C/min, with an initial temperature hold for 3 minutes and a final temperature hold for the remainder of the run.
- Injector temperature of 300°C.
- Scan range of 35-400 amu, which allows detection of materials with molecular weights greater than 35 without interference from the normal components of the air.
- Injection volume of 5.0 mL with a gas syringe.
- Injection time of 30 sec.
- Scan start delay of 0.0 sec.

Lower molecular weight materials can be detected by dropping the lower end of the scan range to 10 amu, but the large amount of air present complicates the detection. Carbon monoxide cannot be determined on a low-resolution mass spectrometer because its nominal molecular weight, 28 amu, is the same as that of nitrogen.

8.3. Evacuate Cell. After obtaining the infrared spectrum, evacuate the 20-m cell by pumping the sample through a charcoal tube. This can be done by attaching the charcoal tube between the sample inlet valve of the cell and the room air valve on the vacuum system, using rubber tubing. Shut off the sample cell valve on the main panel and the main valve to the pump. Open the valves at the two ends of the rubber tubing and then slowly open the valve to the pump. When the gauge reads less than 10 mm pressure and there is no longer the sound of air through the tubing, shut off the valves at the two ends of the rubber tubing, open the sample cell valve to complete evacuation of the cell, and remove the charcoal tube. Elute the charcoal tube with 1.0 mL of carbon disulfide and run the solution on the GC/MS using the conditions given in Section 6.2.

BERYLLIUM ON AIR FILTERS

Analyte: Beryllium	**Method No.:** IH150
Matrix: Filter	**Sensitivity:** 0.1 μg/filter
Procedure: Acid digestion and atomic absorption spectrophotometry	**Precision:** 4-5% RSD
Effective Date: 07/22/86	**Authors:** Ava M. Salman Michael G. Bell

SAFETY NOTE: Before beginning this procedure, read all of the Material Safety Data Sheets for the chemicals listed in Sec. 7. Read Sec. 4.3 of the EM-9 Safety Manual for information on personal protective clothing and equipment. Read Sec. 12 of this procedure and Source Material 13.4 for proper waste disposal practices.

1. Principle of Method

1.1. Filters are wet-ashed using nitric acid and perchloric acid to destroy the organic matrix.

1.2. The resulting solutions are aspirated into the nitrous oxide-acetylene flame of an atomic absorption spectrophotometer and the absorbance is measured at 234.9 nm.

2. Sensitivity

2.1. Detection limits of 0.1 μg/filter can be achieved, based upon the minimum readable signal from the atomic absorption spectrophotometer.

3. Accuracy and Precision

3.1. Analyses of in-house quality control filter samples gave a mean recovery of 106% ± 4.3%. The data are listed in Table I.

3.2. Analyses of twenty performance evaluation filter samples gave a mean recovery of 106% ± 2.8%. The data are listed in Table II.

4. Interferences

4.1. Sodium, magnesium, aluminum, and silicon depress beryllium sensitivity.

5. Collection and Storage of Samples

5.1. Millipore or Whatman filters are the preferred collection media. There are no special storage requirements.

6. Apparatus

6.1. Aluminum block: 23.5- by 10-cm with 3.4-cm-diam holes 8.5-cm deep, to receive 100-mL centrifuge tubes.

6.2. Sea sand: 1-2 cm placed in the bottom of the block holes.

6.3. Hot plate: Thermolyne Type 2600, to hold aluminum block.

6.4. Atomic absorption spectrophotometer: Model 551, Instrumentation Laboratory, Wilmington, Massachusetts.

6.5. Nitrous oxide-acetylene burner head.

6.6. Beryllium hollow-cathode lamp.

6.7. Centrifuge tubes: Pyrex, 100-mL.

6.8. Pipettes: Eppendorf or equivalent, various sizes.

6.9. Repipettor: 1-10 mL variable dispenser, safe for acids.

6.10. Flasks: 10-mL, volumetric.

7. Reagents

7.1. Nitrous oxide.

7.2. Acetylene.

7.3. Nitric acid (concentrated, reagent-grade).

7.4. Perchloric acid (concentrated, reagent-grade).

7.5. Beryllium stock standard (1000 ppm). Spex Industries, Inc., Metuchen, New Jersey.

8. Calibration and Standards

8.1. Prepare two working standards by diluting 0.100 mL and 1.00 mL of stock beryllium standard into two 10-mL volumetric flasks. Bring to volume with 3% HNO_3. These solutions are 10 and 100 ppm beryllium respectively.

8.2. Prepare the standard curve by spiking filters with working standard and proceeding with Steps 8.2.1 through 8.2.3. The standard curve may be prepared in a 3% HNO_3 solution and used directly.

8.2.1. Spike the first two filters with 10 and 100 μL of the 10-ppm working standard. This gives concentrations of 0.1 and 1.0 μg beryllium per filter.

8.2.2. Spike three more filters with 50, 100, and 200 μL of the 100-ppm working standard. This gives concentrations of 5.0, 10.0, and 20.0 μg beryllium per filter.

8.2.3. Ash the standard filters in the same manner as the sample filters.

8.3. Prepare the standard curve by aspirating each prepared standard, recording absorbances, and calculating concentration using a data regression program (e.g., Lotus 1-2-3, Version 2A).

9. Procedure

9.1. Place sample filters into 100-mL centrifuge tubes.

9.2. Place blank filters into 100-mL centrifuge tubes and spike with appropriate amounts of standard solution.

9.3. Add 200 μL of perchloric acid to each tube.

9.4. Add 8 mL of concentrated nitric acid to each tube.

9.5. Place all tubes in the aluminum block and heat on high heat, about 200°C, until all nitric acid has evaporated and perchloric acid fumes are observed.

9.6. If filters are completely dissolved, the liquid in the tubes should be clear or a very pale yellow. Continue heating to dryness. If residue is observed, add 5 mL of concentrated nitric acid to these tubes and continue heating. Continue adding 5-mL aliquots of nitric acid until little or no residue remains.

9.7. Cool all tubes and add 10 mL of 3% nitric acid to each tube.

9.8. Analyze each sample by atomic absorption spectrophotometry.

10. Operation of Instrument

10.1. Procedures for operation of the Instrumentation Laboratory Model 551 atomic absorption spectrophotometer can be found in the *Atomic Absorption Methods Manual*, Vol. 1, *Standard Conditions for Flame Operation*, published by the

Instrumentation Laboratory. Operating parameters and conditions are listed for each element.

11. Calculations

11.1. The Instrumentation Laboratory Model 551 atomic absorption spectrophotometer gives readings in absorbance.

11.2. Plot the standard curve using linear graph paper with concentration on the x-axis and absorbance on the y-axis. Determine the concentration of the samples from the standard curve.

11.3. Linear regression may be used to calculate the standard curve and determine the concentration.

12. Proper Waste Disposal Practices

12.1. Solid waste.

12.1.1. All filters containing hazardous metals are digested in the procedure. No solid waste is generated.

12.1.2. Dispose of the Millipore container that held the filter prior to digestion as ordinary laboratory trash.

12.2. Liquid waste.

12.2.1. Pour liquid waste from leftover samples containing only Be and standard solutions containing only Spex beryllium down the sink.

12.2.2. Accumulate liquid waste from leftover samples containing Be along with other metals (i.e. Pb over 5 ppm) in a coated glass jar in a secondary containment tray and keep it segregated from liquid waste containing organic or radioactive waste.

12.2.3. Open the bottle only for the time necessary to add the waste.

12.2.4. Keep filled bottles capped and in the secondary containment tray pending pickup by the Waste Management group.

12.2.5. Label a new bottle for further use.

12.3. Waste pickup.

12.3.1. Request pickup by the Waste Management group of solid waste or a full bottle of liquid waste containing trace metals using the current Chemical Waste Disposal Request (CWDR) form. The current Waste Profile

Request Form (WPRF) which describes the waste is referenced on the CWDR.

12.3.2. The Waste Management group picks up the waste for disposal in accord with Laboratory policy.

13. Source Materials

13.1. D. T. Coker and J. M. Ottaway, "Formation of Free Atoms in Air-Acetylene Flames Used in Atomic Absorption Spectrometry," *Nature Physical Science* **20**, 156-157 (1971).

13.2. B. Fleet, K. V. Liberty, and T. S. West, "A Study of Some Matrix Effects in the Determination of Beryllium by Atomic Absorption Spectroscopy in the Nitrous Oxide-Acetylene Flame," *Talanta* **17**, 203-210 (1970).

13.3. *Atomic Absorption Methods Manual*, Vol. 1, *Standard Conditions for Flame Operation* (Instrumentation Laboratory, Analytical Instrument Division, Wilmington, Massachusetts, 1975).

13.4. "Hazardous and Mixed Waste," Administrative Requirement 10-3, in *Environment, Safety, and Health Manual*, Los Alamos National Laboratory Manual, Chapter 1 (most recent edition).

Revisions or additions to the procedure are marked (▒). Where a section heading is marked, the entire section has been revised.

TABLE I. BERYLLIUM RECOVERY ON INTERNAL QUALITY ASSURANCE SAMPLES

Beryllium (μg/filter)		Recovery
Measured conc.	Spiked conc.	%
4.2	4.0	105
9.2	9.0	102
9.5	9.0	106
5.1	5.0	102
5.0	5.0	100
7.4	7.0	106
9.6	9.0	107
2.2	2.0	110
9.3	9.0	103
9.3	9.0	103
9.3	9.0	103
2.1	2.0	105
4.5	4.0	112
7.9	7.0	113
8.1	7.0	116
4.5	4.0	112
10.6	10.0	106
4.4	4.0	110
10.2	10.0	102
11.0	10.0	110
10.8	10.0	108
4.4	4.0	110
2.1	2.0	105
4.3	4.0	108
2.0	2.0	100
4.1	4.0	102
	Mean ± Std Dev	106.4 ± 4.3

TABLE II. BERYLLIUM RECOVERY ON PERFORMANCE EVALUATION SAMPLES

Beryllium (μg/filter)		Recovery
Measured conc.	Spiked conc.	%
10.8	10.0	108
23.9	25.0	96
53.5	50.0	107
106.0	100.0	106
10.9	10.0	109
10.7	10.0	107
26.8	25.0	107
26.8	25.0	107
53.9	50.0	108
53.9	50.0	108
106.0	100.0	106
104.0	100.0	104
105.0	100.0	105
52.4	50.0	105
26.8	25.0	107
10.5	10.0	105
10.7	10.0	107
26.0	25.0	104
53.2	50.0	106
102.7	100.0	103
	Mean ± Std Dev	105.8 ± 2.8

ETHANOL IN AIR

Analyte: Ethanol	**Method No.:** IH185
Matrix: Air	**Detection Limit:** 10 μg/sample
Procedure: Adsorption on a charcoal tube; desorption with carbon disulfide containing 2-butoxyethanol; analysis by gas chromatography.	**Precision:** Unknown
Effective Date: 12/07/82	**Author:** Stuart Nielsen

SAFETY NOTE: Before beginning this procedure, read all of the Material Safety Data Sheets for the chemicals listed in Sec. 5. Read Sec. 4.3 of the EM-9 Safety Manual for information on personal protective clothing and equipment. Read Sec. 11 of this procedure and Source Material 12.2 for proper waste disposal practices.

1. Principle of Method

1.1. A known volume of air at an average flow rate of 0.05 L/min is pumped through a charcoal tube. The adsorbent is desorbed with carbon disulfide containing 5% 2-butoxyethanol. The extracts are examined by gas chromatography with a mass-selective detector.

2. Precision and Detection Limits

2.1. Precision of the analytical method for relatively high amounts of ethanol, >100 μg per sample, has been measured to be ±5.2% RSD. Because the ethanol peak has a chromatographic retention time shorter than that of carbon disulfide on an SPB-5 column, the peak is quite broad, making detection and quantitation difficult at low levels of ethanol.

2.2. The average desorption efficiency has been calculated to be approximately 70% but it is highly variable. Desorption efficiencies must be determined with each set of samples run, taking care to do the desorption efficiencies on the same batch of adsorbent as were used for the samples.

3. Interferences

3.1. High humidity reduces sampling efficiency.

3.2. Any compound with the same retention time as ethanol on the column used will interfere.

4. Apparatus

4.1. Autosampler vials: 1-mL, glass, Hewlett Packard, Albuquerque, NM, or equivalent.

4.2. Sampler tubes: glass, containing two sections of activated coconut shell charcoal (front = 100 mg; back = 50 mg) (SKC 226-01 or equivalent).

4.3. Gas chromatograph: with autosampler and mass-selective detector.

4.4. Column, capillary: 30 m x 0.25 mm i.d., 1.0-μm film, DB-5 or DB-wax or equivalent.

4.5. Syringe: 2-mL.

4.6. Syringes: 1- to 100-μL.

4.7. Vials: 10- and 60-mL.

4.8. Volumetric flask: 100-mL.

5. Reagents

5.1. Carbon disulfide, chromatographic grade.

5.2. Ethanol, absolute.

5.3. 2-Butoxyethanol, reagent grade.

5.4. Suitable internal standard. 1,1,1-Trichloroethane and isopropanol have been used successfully.

6. Determination of Desorption Efficiency

6.1. Prepare a solution of ethanol in carbon disulfide which contains a known concentration between 5 and 20 μg per μL.

6.2. Spike known amounts of the above solution onto at least three charcoal tubes to cover the expected range of the samples. Inject the solution into the front charcoal section using a microsyringe, being careful not to get any of the solution on the glass wool plug or the glass tube.

6.3. Cap the tubes and let them stand for several hours, preferably overnight.

6.4. Treat the spikes as the samples are treated in Section 9.

7. Eluant Solution

7.1. In a 100-mL volumetric flask place 5.0 mL of 2-butoxyethanol and 20 μL of internal standard. Fill to the mark with carbon disulfide.

8. Standards

8.1. Prepare a standard solution at approximately the high end of the desired concentration range.

8.1.1. To a preweighed 10-mL vial add approximately 7 mL of eluant solution, cap the vial and reweigh.

8.1.2. Inject into the vial approximately 20-25 μL of ethanol and reweigh.

8.1.3. Calculate the concentration of ethanol in the standard from the differences in the weights.

$$\text{Conc., mg/g} = \text{wt. ethanol/wt. total solution}$$

8.2. Working standards.

8.2.1. Prepare six additional standards at concentrations of 0.500, 0.200, 0.100, 0.050, 0.020, and 0.010 times the highest standard by dilution of the highest concentration standard.

8.2.1.1. Into six weighed autosampler vials with caps put 0.50, 0.80, 0.90, 0.95, 0.98, and 0.99 mL of internal standard solution, respectively, using a 2.0-mL syringe, and reweigh the vials, caps, and contents.

8.2.1.2. Using appropriate sized microsyringes, add to the vials 0.50, 0.20, 0.10, 0.05, 0.02, and 0.01 mL of the highest concentration standard, set the caps, and reweigh.

8.2.1.3. Calculate the concentrations from the weight differences.

9. Procedure

9.1. Sample preparation.

9.1.1. Open each charcoal tube and discard the glass wool. Transfer the front charcoal section to an autosampler vial.

9.1.2. Discard the foam plug and transfer the back charcoal section to a second autosampler vial.

9.1.3. Add 1.0 mL of eluant solution to each vial. Cap each vial.

9.1.4. Allow to stand at least 30 min with occasional agitation.

9.2 Analysis.

9.2.1. Set up the gas chromatograph to use the following conditions (if the alternative DB-Wax type column is used, conditions will have to be determined):

- DB-5 (or equivalent) capillary column, 30 m x 0.25 mm i.d., 1.0-μm film.
- Injection port temperature - 280°C.
- Transfer line temperature - 280°C.
- Initial oven temperature - 30°C.
- Oven program - hold for 4.0 min, 20°C/min to 280°C. Total run time - 16 min.
- Solvent delay - 1.7 min.
- Scan range - 20-400 amu.
- Mass spectrometer data acquisition off at 3.0 min, back on at 4.5 min, back off at 8.0 min.
- Sample injection 1 μL.

9.2.2. Using these conditions, the retention time for ethanol will be 2.1 min. (The retention time of the analyte will vary depending upon the condition of the column. If the retention time varies significantly for the actual column being used, the mass spectrometer data acquisition sequence may have to be altered.)

9.2.3. Using autosampler sequencing, run a solvent blank, all samples, and all standards.

9.2.4. Obtain the peak areas for ethanol derivative and the internal standard. Also obtain the peak areas for extracted ions 31 and 45 for ethanol.

9.2.5. Correct the peak areas for ethanol to a constant internal standard area.

9.2.6. Prepare standard curves with the amount of ethanol on the x-axis and the corrected peak areas on the y-axis.

9.2.7. If any sample is above the range of the calibration curve, dilute and reanalyze.

10. Calculations

10.1. Read the concentrations of ethanol observed in each sample solution from the standard curves. Average the observed concentrations for the total ion and ions 31 and 45 for each sample.

10.2. Calculate the desorption efficiency from the results for the spike samples by comparing the amount found with the amount spiked.

10.3. Make corrections for the desorption efficiency, for dilutions, and for the blank if necessary.

11. Proper Waste Disposal Practices

11.1. Solid waste.

11.1.1. Solid waste, such as paper wipes and glass Pasteur pipettes contaminated with organic compounds, is accumulated in a covered metal can lined with a plastic bag and is kept segregated from solid waste that is not contaminated with organic compounds.

11.1.2. The can is labeled with a hazardous waste label suitable for waste contaminated with this type of organic compounds.

11.1.3. The can is opened only for the time necessary to add waste.

11.1.4. When the plastic bag is full, it is sealed with tape, removed from the can, identified as waste contaminated with organic compounds, and placed in a functioning chemical exhaust hood pending pickup by the Waste Management group.

11.1.5. A new plastic bag is put into the waste can for continued use.

11.2. Liquid waste.

11.2.1. Liquid organic wastes, such as rinses of syringes and Pasteur pipettes, are accumulated in a covered metal can in a secondary containment tray.

11.2.2. The can is labeled with a hazardous waste label suitable for this type of waste.

11.2.3. When the can is full, it is capped and kept in the secondary containment tray pending pickup by the Waste Management group.

11.2.4. A new can is labeled for future use.

11.3. Excess sample extracts and standard solutions.

11.3.1. Autosampler vials containing excess sample extracts and standard solutions are accumulated in a glass jar in a secondary containment tray.

11.3.2. The glass jar is labeled with a hazardous waste label suitable for this type of waste.

11.3.3. The glass jar is opened only for the time necessary to add the vials.

11.3.4. When the glass jar is full it is kept in the secondary containment tray pending pickup by the Waste Management group.

11.3.5. A new glass jar is labeled for future use.

11.4. Waste pickup.

11.4.1. Pickup by the Waste Management group of a full bag, can, or glass jar of waste is requested using the current Chemical Waste Disposal Request (CWDR) form. The current Waste Profile Request Form (WPRF) which describes the waste is referenced on the CWDR form.

11.4.2. The Waste Management group picks up the waste for disposal according to Laboratory policy.

12. Source Materials

12.1. "Alcohols I," NIOSH Manual of Analytical Methods, third edition, Method No. 1400, issued 2/15/84, National Institute for Occupational Safety and Health, Cincinnati, Ohio.

12.2. "Hazardous and Mixed Waste," Administrative Requirement 10-3, in *Environment, Safety, and Health Manual*, Los Alamos National Laboratory Manual, Chapter 1 (most recent edition).

FORMALDEHYDE IN AIR, WATER, OR SOLIDS

Analyte: Formaldehyde	**Method No.:** IH211
Matrix: Air, water, or solids	**Detection Limit:** 1 μg/sample
Procedure: Adsorption on a solid sorbent of 10% 2-(hydroxymethyl)-piperidine on XAD-2; desorption with toluene; analysis by gas chromatography.	**Precision:** ± 10% RSD
Effective Date: 12/07/82	**Author:** Stuart Nielsen

SAFETY NOTE: Before beginning this procedure, read all of the Material Safety Data Sheets for the chemicals listed in Sec. 5. Read Sec. 4.3 of the EM-9 Safety Manual for information on personal protective clothing and equipment. Read Sec. 9 of this procedure and Source Material 10.2 for proper waste disposal practices.

1. Principle of Method

1.1. For air, a known volume of air at an average flow rate of 0.01 to 0.10 L/min is pumped through an adsorbent tube containing 10% 2-(hydroxymethyl)piperidine on XAD-2 with a 150-mg front section and a 75-mg backup section (Supelco ORBO-24 or equivalent). The adsorbate is desorbed with toluene. The extracts are examined by gas chromatography with a mass-selective detector.

1.2. For water, an aliquot of water is mixed with a known amount of toluene in a vial. To the vial is added the adsorbent from one of the above tubes. The vial is agitated for several hours. A portion of the toluene solution is examined by gas chromatography with a mass-selective detector. (NOTE: This same procedure can be used for any liquid which is not miscible with toluene.)

1.3. For bulk solids, an aliquot of the solid is placed in a vial with a known amount of toluene. To the vial is added the adsorbent from one of the above tubes. The vial is agitated for several hours. A portion of the toluene solution is examined by gas chromatography with a mass-selective detector.

2. Precision and Detection Limits

2.1. Precision of the analytical method for air samples was determined to be ±10% by averaging the standard deviations of formaldehyde samples run as quality assurance samples. The precision for water and solid samples is unknown.

2.2. The adsorbent tubes as received from the manufacturer contain a small amount of formaldehyde, equivalent to 1.5 ± 0.5 μg per 150 mg of sorbent. Minimum detection limit of the method is approximately 1 μg above this background level.

3. Interferences

3.1. None have been observed.

3.2. Acid mists may inactivate the adsorbent, leading to inefficient collection of the formaldehyde in air samples. If the water samples are significantly acidic, the derivative may not form.

4. Apparatus

4.1. Autosampler vials: 1-mL, glass, Hewlett Packard, Albuquerque, NM, or equivalent.

4.2. Sampler tubes: glass, containing two sections of 2-(hydroxy-methyl)piperidine-coated XAD-2, front = 150 mg, back = 75 mg, retained and separated by small plugs of silanized glass wool (Supelco ORBO-24 or equivalent).

4.3. Gas chromatograph with autosampler and mass-selective detector.

4.4. Column, capillary: 30 m x 0.25 mm i.d., 1.0-μm film, DB-5 or DB-Wax or equivalent.

4.5. Syringe: 2-mL.

4.6. Syringes: 1- to 100-μL.

4.7. Volumetric flask: 10-mL.

4.8. Vials: appropriate sizes for use with the water and solid samples.

5. Reagents

5.1. Toluene, chromatographic quality. Burdick & Jackson, Muskegon, Michigan, or equivalent.

5.2. Formalin solution, 37%.

SPECIAL PRECAUTIONS: Formaldehyde is viewed as a potential occupational carcinogen. Handle formalin solution with appropriate care.

6. Standards

6.1. Prepare a stock solution by diluting 27 μL of 37% aqueous formalin solution to 10 mL with distilled, deionized water. This solution will contain 1.0 μg/μL of formaldehyde. This solution is stable for at least three months.

6.2. Working standards.

6.2.1. Open three unused sampler tubes and transfer the adsorbent into six autosampler vials.

6.2.2. Spike the adsorbent in five of the autosampler vials with appropriate amounts of the stock solution to cover the range expected in the samples. Use the sixth vial as the method blank and/or zero level of the standard curve. Cap the vials and allow them to stand for several hours at room temperature.

6.2.3. Add 1.0 mL of toluene to each autosampler vial.

7. Procedure

7.1. Sample preparation.

7.1.1. Air samples.

7.1.1.1. Open each sampler. Remove and place the front glass wool plug and front sorbent section in an autosampler vial.

7.1.1.2. Transfer the back sorbent section with the remaining glass wool plugs to a second autosampler vial.

7.1.1.3. Add 1.0 mL of toluene to each vial. Cap each vial securely. Allow to stand, with occasional shaking, for at least 30 min.

7.1.2. Water samples.

7.1.2.1. Weigh two aliquots of the material into separate, appropriately sized vials.

7.1.2.2. Spike one aliquot with a known amount of formaldehyde stock solution to check recovery.

7.1.2.3. Add a measured amount of toluene to each vial. Add the adsorbent beads from one of the air sampling tubes to each vial.

7.1.2.4. Allow the mixtures to stand, with occasional agitation, for several hours.

7.1.2.5. Transfer a portion of the toluene layer from each vial to autosampler vials for analysis.

7.1.2.6. Unused water samples are returned to Sample Management under chain of custody procedures.

7.1.3. Solid samples.

7.1.3.1. Take portions from several areas of the bulk sample and combine. Weigh two aliquots of this into appropriate sized vials.

7.1.3.2. Spike one aliquot with a known amount of formaldehyde stock solution to check for recovery.

7.1.3.3. Add a measured amount of toluene, adequate to completely wet the material with enough excess for removal of a portion for analysis.

7.1.3.4. Let the material extract for several hours with intermittent shaking.

7.1.3.5. Take an aliquot from each vial and place them in separate autosampler vials.

7.1.3.6. Add the adsorbent beads from one of the air sampling tubes to each vial.

7.1.3.7. Allow the vials to stand for several hours, with agitation, before analysis.

7.1.3.8. Unused solid samples are returned to Sample Management under chain of custody procedures.

7.2 Analysis.

7.2.1. Set up the gas chromatograph to use the following conditions:

- DB-5 (or equivalent) capillary column, 30 m x 0.25 mm i.d., 1.0-μm film.
- Injection port temperature - 280°C.
- Transfer line temperature - 280°C.
- Initial oven temperature - 70°C.
- Oven program - hold for 5.0 min, 2.0°/min to 110°C, 20°/min to 280°C, hold for 1.5 min. Total run time - 35 min.
- Solvent delay - 9.0 min.
- Scan range - 34-500 amu.

- Mass spectrometer data acquisition off at 12.0 min., back on at 19.0 min., back off at 21.0 min.
- Sample injection 1 μL.

7.2.2. Using these conditions, the retention time for the oxazolidine derivative of formaldehyde will be 21.1 min. (The retention time of the analyte will vary depending upon the condition of the column. If the retention time varies significantly for the actual column being used, the mass spectrometer data acquisition sequence may have to be altered.)

7.2.3. If the DB-wax alternative column is used, a different gas chromatograph oven program will have to be used. Recommended beginning trial settings for the column oven are 70°C for 1 min, 15°/min to 240°C, and hold for 10 min.

7.2.4. Using autosampler sequencing, run a solvent blank, all samples, and all standards.

7.2.5. Obtain the peak areas for the oxazolidine derivative and the p-xylene impurity in the toluene, which is used for an internal standard. Also obtain the peak areas for extracted ions 69 and 97 for the oxazolidine derivative.

7.2.6. Correct the peak areas for the oxazolidine derivative to a constant internal standard area.

7.2.7. Prepare standard curves with the amount of formaldehyde on the x-axis and the corrected peak areas on the y-axis.

7.2.7. If any sample is above the range of the calibration curve, dilute and reanalyze.

8. Calculations

8.1. Read the concentrations of formaldehyde observed in each sample solution from the standard curves. Average the observed concentrations for the total ion and ions 69 and 97 for each sample.

8.2. Make corrections for dilutions and for the blank if necessary.

8.3. For water and solid samples, make the appropriate corrections for the amounts of sample and toluene used.

9. Proper Waste Disposal Practices

9.1. Solid waste.

9.1.1. Solid waste, such as paper wipes and glass Pasteur pipettes contaminated with organic compounds, is accumulated in a covered metal can lined with a plastic bag and is kept segregated from solid waste that is not contaminated with organic compounds.

9.1.2. The can is labeled with a hazardous waste label suitable for waste contaminated with this type of organic compounds.

9.1.3. The can is opened only for the time necessary to add waste.

9.1.4. When the plastic bag is full, it is sealed with tape, removed from the can, identified as waste contaminated with organic compounds, and placed in a functioning chemical exhaust hood pending pickup by the Waste Management group.

9.1.5. A new plastic bag is put into the waste can for continued use.

9.2. Liquid waste.

9.2.1. Liquid organic wastes, such as rinses of syringes and Pasteur pipettes, are accumulated in a covered metal can in a secondary containment tray.

9.2.2. The can is labeled with a hazardous waste label suitable for this type of waste.

9.2.3. When the can is full, it is capped and kept in the secondary containment tray pending pickup by the Waste Management group.

9.2.4. A new can is labeled for future use.

9.3. Excess sample extracts and standard solutions.

9.3.1. Autosampler vials containing excess sample extracts and standard solutions are accumulated in a glass jar in a secondary containment tray.

9.3.2. The glass jar is labeled with a hazardous waste label suitable for this type of waste.

9.3.3. The glass jar is opened only for the time necessary to add the vials.

9.3.4. When the glass jar is full it is kept in the secondary containment tray pending pickup by the Waste Management group.

9.3.5. A new glass jar is labeled for future use.

9.4. Waste pickup.

9.4.1. Pickup by the Waste Management group of a full bag, can, or glass jar of waste is requested using the current Chemical Waste Disposal Request (CWDR) form. The current Waste Profile Request Form (WPRF) which describes the waste is referenced on the CWDR form.

9.4.2. The Waste Management group picks up the waste for disposal according to Laboratory policy.

10. Source Materials

10.1. "Formaldehyde," NIOSH Manual of Analytical Methods, third edition, Method No. 2541, issued 5/15/85, National Institute for Occupational Safety and Health, Cincinnati, Ohio.

10.2. "Hazardous and Mixed Waste," Administrative Requirement 10-3, in *Environment, Safety, and Health Manual*, Los Alamos National Laboratory Manual, Chapter 1 (most recent edition).

ORGANIC SOLVENTS IN AIR—GENERAL PROCEDURE

Analyte: Organic solvents	**Method No.:** IH260
Matrix: Air	**Detection Limit:** Varies with analyte
Procedure: Adsorption on charcoal; desorption with a suitable solvent; gas chromatographic analysis	**Accuracy and Precision (representative values):** Accuracy ±10% Precision 8% RSD
Effective Date: 12/15/84	**Authors:** Stuart D. Nielsen

SAFETY NOTE: Before beginning this procedure, read all of the Material Safety Data Sheets for the chemicals listed in Sec. 7. Read Sec. 4.3 of the EM-9 Safety Manual for information on personal protective clothing and equipment. Read Sec. 11 of this procedure and Source Material 12.4 for proper waste disposal practices.

1. Principle of Method

1.1. A known volume of air is drawn through a charcoal tube to trap the organic vapors present, or an organic vapor monitor containing a charcoal pad is exposed to the air for a known length of time.

1.2. The charcoal in the tube or the charcoal pad is transferred to a small vial and desorbed with a suitable solvent, usually carbon disulfide. On some organic vapor monitors the solvent is added directly to the pad and direct desorption is done.

1.3. An aliquot of the desorbed sample is injected into a gas chromatograph.

1.4. The area of the resulting peak is determined and compared with areas obtained from the injection of the standards.

2. Minimum Detectable Limit

2.1. The lower limit of detection varies with the particular organic analyte. The historic range for the mass-selective detector is 0.1-10 μg/sample

3. Accuracy and Precision

3.1. Quality control sampling is used as a measurement of the standard precision and accuracy. National Bureau of Standards Standard Reference Materials are also used. Representative values observed are +10% accuracy with 8% relative standard deviation.

4. Interferences

4.1. High humidity may interfere with the absorption of the organic vapor onto the charcoal.

4.2. If two or more solvents are known or suspected to be present in the sample, it will be necessary to select appropriate gas chromatographic operating conditions for their separation.

4.3. Any compound that has the same retention time as the specific analyte at the operating conditions used is an interference. Retention time alone cannot be considered proof of chemical identity.

5. Collection and Storage of Samples

5.1. Samples are collected following standard procedures. See the sampling methods suggested in Source Materials 12.1.

5.2. Refrigerate samples immediately upon receipt in order to minimize analyte degradation or reaction.

5.3. Samples should not be stored longer than 2 months.

6. Apparatus

6.1. Gas chromatograph: equipped with a mass selective detector.

6.2. Automatic liquid sampler (autosampler).

6.3. Column: capable of performing the required separations. A 30-m by 0.25-mm bonded 5% phenyl methyl silicone fused-silica capillary column is a good general column.

6.6. Capped glass vials: 2-, 4-, 10-, and 30-mL, with Teflon-lined caps.

6.7. Automatic liquid sampler (autosampler) vials: 1.5-mL with Teflon-lined caps.

6.8. Microsyringes: 10-μL and other sizes suitable for making standard solutions.

6.9. Mini-injector: 0.01-μL, Supelco, Bellefonte, Pennsylvania.

6.11. Syringes: 2- and 5-mL, with appropriate needles.

7. Reagents

7.1. Helium.

7.2. Carbon disulfide (spectro-quality) or other suitable desorption solvent.

7.3. Specific solvents (chromato-quality grade) for which the determinations are to be made.

7.4. Suitable internal standard.

8. Calibration and Standards

8.1. Check the purity of all chemicals by injecting 0.01 μL into the gas chromatograph at appropriate conditions. Obtain percent purities of the chemicals from the chromatogram.

8.2. Internal standard solution.

8.2.1. Choose internal standards having chemical properties and boiling points similar to the analytes.

8.2.2. Add the internal standard to a volume of desorption solvent sufficient to carry out the entire determination and use this for preparing the standards and for elution of the unknowns.

8.2.3. Concentration of the internal standard should be within the ranges of the analytes of interest, though it is not necessary to know precisely its concentration. An appropriate volume to add can be estimated by the following equation:

$$V_{IS} = \frac{C_{IS}}{V_T} \times d_{IS} \quad ,$$

where C_{IS} = concentration of internal standard (mg/mL),
V_{IS} = volume of internal standard added (mL),
V_T = total volume of internal standard solution (mL), and
d_{IS} = density of internal standard (mg/mL).

8.2.4. Fill a 200-mL volumetric flask three-quarters full with desorption solvent. Add the calculated amount of internal standard under the surface of the solvent with a syringe. Bring to total volume with desorption solvent. Keep stoppered, wrapped with parafilm, and in the refrigerator when not in use.

8.3. Standards.

8.3.1. Calibration range for charcoal tubes.

8.3.1.1. Run a calibration curve in the range of 0.1 to 2 times the threshold limit value (TLV) of the analyte of interest. If a TLV is not available, assume a range of 10-1000 μg/tube.

8.3.1.2. Assume a sampling volume of 10 L.

8.3.1.3. To determine the calibration range:

- Obtain the TLV for the compound of interest. TLV of benzene = 30 mg/m^3 = 30 μg/L.
- Assume a 10-L sampling volume. 30 μg/L x 10 L = 300 μg.
- One TLV is equivalent to 300 μg. Because the range should be 0.1-2.0 TLV, the amount of benzene spiked onto the charcoal tube would be 30-600 μg.
- With a 1-mL addition of desorption solvent, the calibration curve would cover the range from 30 to 600 μg/mL.

8.3.2. Calibration range for an organic vapor monitor (OVM).

8.3.2.1. Occasionally, compounds will be sampled by diffusion onto an organic vapor monitor (OVM) obtained from 3M. These monitors are not suitable for all organics, and the calculations to obtain calibration ranges are different. Information on suitable solvents and calculations is found in Source Material 12.3.

8.3.2.2. Look up the analyte of interest in the Analysis Guide section of the above reference. If the analyte is not listed, the information for a similar type compound may be used but the final calculations for the concentration of the analyte in the atmosphere may not be completely accurate.

8.3.2.3. Obtain the sampling rate (K_o).

8.3.2.4. Look up the TLV of the analyte.

8.3.2.5. Use the following equation to determine the weight of analyte on the monitor at the TLV.

$$W = (K_o)\ (C)\ (t)\ (10^6\ m^3/mL) \quad ,$$

where W = amount of analyte (mg),
K_o = sampling rate of monitor (mL/min),
C = TLV concentration (mg/m^3), and
t = sampling time (min); 480 min for 8-h sample.

8.3.2.6. The calibration range is 0.1-2.0 times the TLV assuming the addition of 1 mL of desorption solvent.

8.3.2.7. Make sure the calibration range does not exceed the capacity of the analyte on the monitor as listed in Source Material 12.3.

8.3.3. Preparation of standards.

8.3.3.1. Prepare a solution at approximately the high end of the desired concentration range.

8.3.3.1.1. Add approximately 9 mL of internal standard solution to a weighed 10-mL vial. Cap the vial and reweigh.

8.3.3.1.2. Add the analytes to the vials by microsyringe, reweighing the vial and contents after each addition.

8.3.3.1.3. Calculate the concentrations of the analytes from the weight differences.

8.3.3.2. Prepare six additional standards at concentrations of 0.500, 0.200, 0.100, 0.050, 0.020, and 0.010 times the highest standard by dilution of the highest concentration standard.

8.3.3.2.1. Into six weighed autosampler vials with caps put 0.50, 0.80, 0.90, 0.95, 0.98, and 0.99 mL of internal standard solution, using a 2.0-mL syringe, and reweigh the vials, caps, and contents.

8.3.3.2.2. Using appropriate sized microsyringes, add to the vials 0.50, 0.20, 0.10, 0.05, 0.02, and 0.01 mL of the highest concentration standard, set the caps, and reweigh.

8.3.3.2.3. Calculate the analyte concentrations from the weight differences.

9. Procedure

9.1. Sample preparation.

9.1.1. Charcoal tubes.

9.1.1.1. Carefully break open the front end of each charcoal tube.

9.1.1.2. Remove and discard the wire retainer and the glass wool.

9.1.1.3. Transfer the charcoal in this section to an autosampler vial and cap the vial.

9.1.1.4. Remove the foam separating section and place it in a second autosampler vial.

9.1.1.5. Transfer the charcoal in the second section to the second vial and then cap the vial.

9.1.1.6. Take care in each step of the operation that no charcoal is lost. Rubber gloves can cause static electricity, so it is recommended that they be removed during this part of the operation.

9.1.1.7. Add 1.0 mL of internal standard solution to each vial, using a 2.0-mL syringe, and recap the vials.

9.1.1.8. Allow the vials and their contents to stand, with occasional shaking, for at least 30 min to assure complete desorption.

9.1.2. Organic vapor monitors.

9.1.2.1. Make sure that the white film has been removed from the monitor and that the closure cap is snapped on tight.

9.1.2.2. Add 1.5 mL of internal standard to the OVM through the center port by syringe. The pouring port should also be open.

9.1.2.3. Seal both ports. Let the monitor stand with occasional shaking for at least 30 min.

9.1.2.4. Transfer the contents of the OVM to an autosampler vial.

9.2. Gas chromatograph conditions.

9.2.1. Set the operating conditions on the gas chromatograph and allow equilibrium to be attained. Operating conditions will vary with the analyte and the column used. Typical operating conditions are:

- Injector temperature, 25-50°C above the boiling point of the analyte, to give flash evaporation.
- Column oven temperature, 10-30°C below the boiling point of the analyte.
- Detector temperature, at or above the injection temperature, usually 250-300°C. A high detector temperature is used to eliminate condensation of materials within the detector.
- Carrier gas flow, 30-40 mL/min for packed columns and 1-2 mL/min for capillary columns.
- For other operating conditions, see the manufacturer's instruction manual for the specific gas chromatograph and/or detector being used.

9.2.2. Recommended representative conditions are given in Table I for a variety of typical analytes.

9.3. Sample injection.

9.3.1. Inject 2.0 μL of sample into the gas chromatograph, using an autosampler or injecting manually.

9.3.2. This injection is one of the more critical steps in the determination, because the quality of the results depends directly on the variation in the injection volume from sample to sample, even though an internal standard is used. For this reason the consistency of an autosampler is preferred over manual injection.

9.4. Determination of desorption efficiency.

9.4.1. Charcoal tubes.

9.4.1.1. The desorption efficiency of a particular compound can vary from one batch of charcoal to another.

9.4.1.2. To determine desorption efficiency, use 2-5 charcoal tubes from the same batch used to obtain the samples. Break off the tip from the inlet end of each tube.

9.4.1.3. Using a microliter syringe, add a known amount of the analyte, within the range of the calibration curve, to each of the tubes and reseal.

9.4.1.3.1. Make up a stock desorption solution in carbon disulfide.

9.4.1.3.2. Spike 5-10 μL into the center of the front section of the tube, being careful not to get the spike on the glass wool, glass walls, or separating foam.

9.4.1.4. Cap and seal with parafilm and allow the tubes to stand at least overnight to assure complete adsorption and equilibration of the analyte.

9.4.2. Organic vapor monitors.

9.4.2.1. Remove the plastic ring and white film from the monitor.

9.4.2.2. Place a 2.5-mm-diam Whatman No. 5 filter paper on the spacer plate.

9.4.2.3. Snap the closure cap on the monitor.

9.4.2.4. Calculate the amount of material to be injected. The following equation will calculate the injection amount, in mg, that corresponds to the amount that would be collected by a monitor at the sampling conditions chosen. A recovery coefficient curve can generated by varying the chosen concentration levels and exposure times.

$$W = (K_o)\ (C)\ (t)\ (10^{-6}\,m^3/mL)\ ,$$

where W = amount of liquid injected (mg),
K_o = sampling rate of monitor (mL/min),
C = average concentration (mg/m^3), and
t = sampling time (min).

For compounds that are solid at room temperature, prepare a solution in carbon disulfide so that no more than a 5-μL injection is needed to spike the required number of mg of the compound. A suggested starting point would be to assume an average concentration of one TLV and an 8-h exposure period, as long as the amount in mg does not exceed the recommended exposure limit of the monitor.

9.4.2.5. Inject the known quantity of the organic material onto the filter paper through the center port.

9.4.2.6. Let the monitor sit 16-24 h to allow total transfer of the organic material from the filter paper to the sorbent before elution.

9.4.2.7. Remove the filter paper from the monitor.

9.4.3. Desorb and analyze the tube or monitors as described in Steps 9.1-9.3.

9.4.4. The desorption efficiency is the concentration on the tubes or monitor found from the calibration curve divided by the actual concentration spiked on the tube.

10. Calculations

10.1. Determine relative peak areas.

10.1.1. Compute the areas under the peaks for the analytes and the internal standard in the total-ion chromatogram.

10.1.2. Compute extracted-ion chromatograms for one or two characteristic ions from the mass spectrum of each of the analytes and compute the areas under these peaks.

10.1.3. Compute normalized peak areas relative to the internal standard total-ion area for the analyte total-ion and extracted-ion areas to correct for variation in the amount of sample injected.

$$PA_R = \frac{PA_o}{IS_o} ,$$

where PA_R = peak area ratio of analtye,
PA_o = observed peak area of analyte, and
IS_o = observed peak area of internal standard.

10.2. Prepare total-ion and extracted-ion standard curves using linear graph paper, with the analyte peak area ratios on the y-axis and their known concentrations on the x-axis. Prepare a least-squares fit of the data. The standard curves should be straight lines passing through the origin, but they may curve downward at very high concentrations.

10.3. For the unknowns, determine from the standard curves the concentrations corresponding to each corrected analyte peak area ratio.

10.4. Average the total ion and extracted ion concentrations for each analyte for each sample.

10.5. Correct each sample for the blank.

$$C_c = C_s - C_b \quad ,$$

where C_c = corrected concentration (mg/mL) of sample,
C_s = concentration of the sample, and
C_b = concentration of the blank.

10.6. Determine the weight of the analyte on the tube or monitor by multiplying the corrected concentration by the amount of desorption solvent (mL).

10.7. Add the corrected amounts present in the front and backup sections of the same sample tube to determine the total measured amount in the sample. A large amount found in the backup section indicates that breakthrough may have occurred because of overloading, humidity, or other reasons, and the observed results may be low. Report this along with the results.

10.8. Divide the total weight by the desorption efficiency to obtain the corrected weight for the sample.

10.9. If all the data are available, calculate the analyte concentrations in the environment in either mg/m^3 or ppm (corrected to standard conditions).

10.9.1. Charcoal tubes.

10.9.1.1. Calculate the analyte concentration in mg/m^3.

$$C = \frac{W \times K}{V} \quad ,$$

where C = analyte concentration (mg/m^3),
W = sample weight (mg),
K = 1000 (L/m^3), and
V = volume of air sampled (L).

10.9.1.2. Calculate the analyte concentration in ppm.

$$ppm = C \times \frac{24.45}{MW} \times \frac{760}{P} \times \frac{(T + 273)}{298} \quad ,$$

where ppm = analyte concentration (ppm),
C = analyte concentration (mg/m^3),
24.45 = molar volume (L/mole at 25°C and 760 mm Hg),

MW = molecular weight of analyte,
760 = standard pressure (mm Hg),
P = pressure of air sampled (mm Hg),
T = temperature of air sampled (°C),
273 = conversion factor between °C and K, and
298 = standard temperature (K).

10.9.2. Organic vapor monitors.

10.9.2.1. The time-weighted-average concentration in mg/m^3 of the analyte in the environment sampled can be calculated from the following equation:

$$C = \frac{W}{rt} \times A \quad ,$$

where C = analyte concentration (mg/m^3),
W = sample weight (mg),
r = recovery coefficient as determined in Section 9.4.2 or obtained from Source Material 11.3,
t = length of sampling period (min), and
A = calculation constant obtained from Source Material 11.3.

10.9.2.2. The time-weighted-average concentration in parts per million (ppm) of the analyte can be calculated from the following equation:

$$ppm = \frac{W}{rt} \times B \quad ,$$

where W = sample weight (mg),
r = recovery coefficient as determined in Section 9.4.2 or obtained from Source Material 11.3,
t = length of sampling period (min), and
B = calculation constant obtained from Source Material 11.3.

11. Proper Waste Disposal Practices

11.1. Solid waste.

11.1.1. Solid waste, such as paper wipes, empty vials, and used organic vapor monitors contaminated with organic compounds, is accumulated in a

covered can lined with a plastic bag and is kept segregated from solid waste that is not contaminated with organic compounds.

11.1.2. The can is labeled with a hazardous waste label and a label indicating its use for waste contaminated with organic compounds.

11.1.3. The can is opened only for the time necessary to add the waste.

11.1.4. When the plastic bag is full, it is sealed with tape, removed from the can, identified as waste contaminated with organic compounds, and placed in a functioning chemical exhaust hood pending pickup by the Waste Management group.

11.1.5. A new plastic bag is put into the waste can for continued use.

11.2. Liquid waste.

11.2.1. Liquid wastes containing organic compounds, such as rinses from syringes, are accumulated in a covered metal can in a secondary containment tray.

11.2.2. The can is labeled with a hazardous waste label and a label indicating its use for waste containing organic compounds.

11.2.3. When the can is full, it is capped and kept in the secondary containment tray pending pickup by the Waste Management group.

11.2.4. A new can is labeled for future use.

11.3. Used autosampler vials.

11.3.1. Used autosampler vials are accumulated in a glass jar in a secondary containment tray. The glass jar is labeled with a hazardous waste label and a label indicating its use for waste containing organic compounds.

11.3.2. The glass jar is opened only for the time necessary to add vials.

11.3.3. When the glass jar is full, it is capped and kept in the secondary containment tray pending pickup by the Waste Management group.

11.3.4. A new glass jar is labeled for future use.

11.4. Waste pickup.

11.4.1. Pickup by the Waste Management group of a full bag, can, or glass jar of waste contaminated with organic compounds is requested using the current Chemical Waste Disposal Request (CWDR) form. The current

Waste Profile Request Form (WPRF) which describes the waste is referenced on the Chemical Waste Disposal Request.

11.4.2. The Waste Management group picks up the waste for disposal according to Laboratory policy.

12. Source Materials

12.1. Peter M. Eller, Editor, *NIOSH Manual of Analytical Methods*, third edition (National Institute for Occupational Safety and Health, Cincinnati, Ohio, 1984).

12.2. American Conference of Governmental Industrial Hygienists, *Threshold Limit Values for Chemical Substances in the Work Environment* (Publications Office, ACGIH, Cincinnati, Ohio, 1984-85).

12.3. Occupational Health and Safety Products Division/3M, *Organic Vapor Monitor #3500 Compound Guide* (3M Corporation, St. Paul, Minnesota, 1982).

12.4. "Hazardous and Mixed Waste," Administrative Requirement 10-3, in *Environment, Safety, and Health Manual*, Los Alamos National Laboratory Manual, Chapter 1 (most recent edition).

Revisions or additions to the procedure are marked (▒▒▒▒). Where a section heading is marked, the entire section has been revised.

TABLE I. PARAMETERS OF ANALYTICAL METHODS USING CAPILLARY COLUMNS

Analyte (RT)[a]	Column	Column temp. (C°)	Injector temp. (C°)	Transfer line temp. (C°)	Internal standard (RT)[a]
Acetone (5.9)	60 m x .32 mm DB-1	30° for 8 min to 125° @ 4°/min	220	220	Chloroform (8.6)
Benzene					
Carbon tetra-chloride (8.4)	30 m x .25 mm DB-5	25° for 5 min to 100° @ 5°/min	250	300	Chloroform (6.5)
Chloroform (6.5)	30 m x .25 mm DB-5	25° for 5 min to 100 ° @ 5°/min	250	300	Trichloroethylene (10.1)
1,2-Dichloroethane (7.8)	30 m x .25 mm DB-5	25° for 5 min to 100° @ 5°/min	250	300	Chloroform (6.5)
p-Dioxane (7.2)	30 m x .25 mm DB-5	50° for 5 min to 120° @ 10°/min	250	300	Toluene (9.1)
Ethanol	60 m x .32 mm DB-1	30° for 8 min to 125° @ 4°/min	220	220	Chloroform (8.6)
Freon 113 (1.6) 1,1,2-Trichloro-1,2,2,-trifluoroethane	30 m x .25 mm DB-wax	30° to 130° @ 2°/min	220	220	Chloroform (6.3)
Methylene chloride (11.7)	60 m x .32 mm DB-1	30° for 8 min to 125° @ 4°/min	220	220	Chloroform (8.6)
1,1,2,2-Tetrabromoethane (11.2)	30 m x .25 mm DB-5	50° to 250° @ 15°/min	250	300	1,1,2,2-Tetra-chloroethane (6.4)
Trichloroethylene (10.1)	30 m x .25 mm DB-5	25° for 5 min to 100 ° @ 5°/min	250	300	Chloroform (6.5)
Trimethylbenzene (14.2)	30 m x .25 mm DB-5	40° to 180° @ 10°/min	250	300	Toluene (8.8)
m-Xylene (13.7)	30 m x .25 mm DB-5	50° for 1 min to 200° @ 5°/min	250	300	Toluene (9.8)
o-Xylene (14.0)	30 m x .25 mm DB-5	50° for 1 min to 200 ° @ 5°/min	250	300	Toluene (9.8)
p-Xylene (13.7)	30 m x .25 mm DB-5	50° for 1 min to 200° @ 5°/min	250	300	Toluene (9.8)

[a]Retention times (min given in parentheses). The retention times may change with different columns and operating conditions.

ORGANIC SOLVENTS — NIOSH PAT SAMPLES

Analyte: Organic solvents	**Method No.:** IH270
Matrix: Charcoal tube	**Detection Limit:** Varies with analyte
Procedure: Desorption with carbon disulfide, gas chromatographic analysis	**Accuracy and Precision (Representative Values):** Accuracy: ±10% Precision: 8% RSD
Effective Date: 01/01/85	**Author:** Stuart D. Nielsen

SAFETY NOTE: Before beginning this procedure, read all of the Material Safety Data Sheets for the chemicals listed in Sec. 7. Read Sec. 4.3 of the EM-9 Safety Manual for information on personal protective clothing and equipment. Read Sec. 11 of this procedure and Source Material 12.2 for proper waste disposal practices.

1. Principle of Method

1.1. The charcoal in the tube is transferred to a small vial and desorbed with a measured amount of carbon disulfide containing an internal standard.

1.2. An aliquot of the desorbed sample is injected into a gas chromatograph.

1.3. The area of the resulting peak is determined and compared with areas obtained from the injection of the standards.

2. Detection Limits and Ranges

2.1. The lower limit of detection varies with the particular organic analyte. The historic range with the mass-selective detector is 0.1 through 10 μg/sample.

2.2. Organic solvents are analyzed over ranges determined by the National Institute for Occupational Safety and Health (NIOSH) Proficiency Analytical Testing (PAT) Program and are listed in Table II.

3. Accuracy and Precision

3.1. Quality control samples are used to measure the accuracy and precision. National Bureau of Standards Standard Reference Materials are also used. Representative values observed are ±10% accuracy with 8% relative standard deviation.

4. Interferences

4.1. When two or more solvents are present in the sample, it is necessary to select appropriate gas chromatographic operating conditions for their separation.

4.2. Any compound that has the same retention time as the specific analyte at the operating conditions used is an interference. Retention time alone cannot be considered proof of chemical identity. The mass spectrum should be used to confirm the identity of the compound.

5. Storage of Samples

5.1. Refrigerate samples immediately upon receipt in order to minimize analyte degradation or reaction.

5.2. Samples should not be stored longer than 2 months.

6. Apparatus

6.1. Gas chromatograph: Hewlett Packard Model 5890 equipped with a mass-selective detector and an automatic liquid sampler.

6.2. Fused-silica capillary column: 30-m by 0.25-mm, DB-5.

6.3. Capped glass vials: 2-, 4-, 10-, and 30-mL.

6.4. Microsyringes: 10-μL and other sizes suitable for making standard solutions.

6.5. Automatic liquid sampler (autosampler) vials: 1-mL, with crimp-sealed Teflon-lined caps.

6.6. Syringe: 2-mL.

7. Reagents

7.1. Helium.

7.2. Carbon disulfide (spectro-quality) or other suitable solvent.

7.3. Specific solvents (chromato-quality grade) for which the determinations are to be made.

7.4. Suitable internal standard.

8. Calibration and Standards

8.1. Check the purity of all chemicals by injecting 0.01 μL (when checking carbon disulfide use 1.0 μL) into the gas chromatograph at appropriate conditions. See Table I. Obtain percent purities of the chemicals from the chromatogram.

8.2. Internal standard solution.

8.2.1. Choose internal standards with chemical properties and boiling points similar to those of the analytes. See Table I.

8.2.2. Add the internal standard to a volume of carbon disulfide sufficient to carry out the entire determination. Use this solution for preparing the standards and for elution of the unknowns.

8.2.3. Concentration of the internal standard should be within the ranges of the analytes of interest, though it is not necessary to know precisely its concentration. An appropriate volume of internal standard to add to the solvent can be estimated by the following equation:

$$V_{IS} = \frac{(C_{IS})\ (V_T)}{d_{IS}} ,$$

where V_{IS} = volume of internal standard added (mL),
V_T = total volume of internal standard solution (mL),
d_{IS} = density of internal standard (mg/mL), and
C_{IS} = concentration of internal standard (mg/mL).

8.2.4. Put 30 mL of carbon disulfide, or other solvent being used in the extraction, in a 30-mL vial. Add the calculated amount of internal standard with a syringe and cap the vial with a Teflon-lined cap.

8.3. Preparation of Standards.

8.3.1. Prepare a solution at approximately the high end of the PAT target range for the analytes of interest. The target ranges are 0.1-2.0 mg/tube for all analytes except benzene. For benzene the range is 0.05-0.50 mg/tube.

8.3.1.1. Add approximately 9 mL of internal standard solution to a preweighed 10-mL vial, cap the vial, and reweigh.

8.3.1.2. Add the appropriate amounts of analytes to the vial by microsyringe, reweighing the vial and contents after each addition.

8.3.1.3. Calculate the concentrations of the analytes from the weight differences.

8.3.2. Prepare six additional standards at concentrations of 0.500, 0.200, 0.100, 0.050, 0.020, and 0.010 times the highest standard by dilution of the highest standard.

8.3.2.1. Into six weighed autosampler vials with caps put 0.50, 0.80, 0.90, 0.95, 0.98, and 0.99 mL of internal standard solution, using a 2.0-mL syringe. Reweigh the vials, caps, and contents.

8.3.2.2. Using appropriate sized microsyringes, add to the vials 0.50, 0.20, 0.10, 0.05, 0.02, and 0.01 mL of the highest concentration standard, set the caps, and reweigh.

8.3.2.3. Calculate the analyte concentrations from the weight differences.

8.4. Use these standards, plus a solvent blank, to prepare the standard curve.

8.5. Because of the high volatility of carbon disulfide, the standards must be stored in a freezer and are not stable for more than two days.

9. Procedure

9.1. Sample preparation.

9.1.1. Removal of charcoal from tubes.

9.1.1.1. Carefully break open the front end of each charcoal tube.

9.1.1.2. Remove with tweezers the wire retainer and the glass wool and discard.

9.1.1.3. Transfer the charcoal in this section to a vial.

9.1.1.4. PAT Samples generally contain only one section of charcoal. However, if there are two sections, remove the separating foam section and add it to the vial. Transfer the charcoal in the second section to the vial, using a dissecting probe, and cap the vial.

9.1.1.5. Take care in each step of the operation so that no charcoal is lost. Rubber gloves can cause static electricity, so it may be best not to wear them during this part of the operation.

9.1.2. Add 1.0 mL of internal standard to each vial, using a 2.0-mL syringe, and recap the vials.

9.1.3. Allow the vials and their contents to stand, with occasional shaking, for at least 30 min to assure complete desorption.

9.2. Gas chromatograph conditions.

9.2.1. Set the operating conditions on the gas chromatograph and allow equilibrium to be attained. Operating conditions will vary with the analyte and the column used. Typical operating conditions are:

- Injector temperature, 250°C, to give flash evaporation.
- Column oven temperature, 10-30°C below the boiling point of the analyte.
- Transfer line temperature, at or above the injection temperature, usually 250-300°C. A high detector temperature is used to eliminate condensation of materials within the detector.
- Carrier gas flow, 1-2 mL/min for capillary columns.

9.2.2. Recommended representative conditions are given in Table I for a variety of typical analytes.

9.3. Sample injection.

9.3.1. Inject 2.0 μL of sample into the gas chromatograph, using an automatic liquid sampler.

9.4. Determination of desorption efficiency.

9.4.1. The desorption efficiency of a particular compound can vary from one batch of charcoal to another.

9.4.2. To determine desorption efficiency, use two of the blank charcoal tubes sent with the PAT samples. The tubes are opened as described in Step 9.1.1.

9.4.3. Using a microliter syringe, add a known amount of the analyte to each of the tubes and reseal with a cap.

9.4.3.1. Make up a stock desorption solution in carbon disulfide. The concentration of the spike solution should be such that the spikes will be in the target ranges given in Step 8.3.1.

9.4.3.2. Spike 5 to 10 μL into the center of the front section of the tube, being careful not to get the spike on the glass wool, glass walls, or separating foam.

9.4.4. Allow the tubes to stand at least 4 h to assure complete adsorption and equilibration of the analyte.

9.4.5. Desorb and analyze the tubes as described in Steps 9.1-9.3.

9.4.6. The desorption efficiency is the concentration on the tubes found from the calibration curve divided by the actual concentration spiked on the tube.

10. Calculations

10.1. Determine relative peak areas.

10.1.1. Compute the areas under the peaks for the analytes and the internal standard in the total-ion chromatogram.

10.1.2. Compute extracted-ion chromatograms for one or two characteristic ions from the mass spectrum of each of the analytes and compute the areas under these peaks.

10.1.3. Compute normalized peak areas relative to the internal standard total-ion area for the analyte total-ion and extracted-ion areas to correct for variation in the amount of sample injected.

$$PA_R = \frac{PA_O}{IS_O} ,$$

where PA_R = peak area ratio of analyte,
PA_O = observed peak area of analyte, and
IS_O = observed peak area of internal standard.

10.2. Prepare total-ion and extracted-ion standard curves using linear graph paper with the analyte peak area ratios on the y-axis or peak height ratio on the y-axis and their known concentrations on the x-axis. Run a least-squares fit on the data. The standard curves should be straight lines passing through the origin, but they may curve downward at very high concentrations.

10.3. For the unknowns, determine from the standard curve the concentrations corresponding to each analyte peak area ratio.

10.4 Average the total-ion and extracted-ion concentrations for each analyte for each sample.

10.5. Correct each sample for the blank.

$$C_C = C_S - C_B ,$$

where C_C = corrected concentration of sample,
C_S = concentration of the sample, and
C_B = concentration of the blank.

10.6. Determine the weight of analyte on the tube by multiplying the corrected concentration by the volume of desorption solvent.

10.7. Divide the total weight by the desorption efficiency to obtain the corrected weight for the sample.

11. Proper Waste Disposal Practices

11.1. Solid waste.

11.1.1. Solid waste, such as paper wipes or empty vials contaminated with organic compounds, is accumulated in a covered can lined with a plastic bag and is kept segregated from solid waste that is not contaminated with organic compounds.

11.1.2. The can is labeled with a hazardous waste label and a label indicating its use for waste contaminated with organic compounds.

11.1.3. The can is opened only for the time necessary to add the waste.

11.1.4. When the plastic bag is full, it is sealed with tape, removed from the can, identified as waste contaminated with organic compounds, and placed in a functioning chemical exhaust hood pending pickup by the Waste Management group.

11.1.5. A new plastic bag is put into the waste can for continued use.

11.2. Liquid waste.

11.2.1. Liquid wastes containing organic compounds, such as rinses from syringes, are accumulated in a covered metal can in a secondary containment.

11.2.2. The can is labeled with a hazardous waste label and a label indicating its use for waste containing organic compounds.

11.2.3. The can is opened only for the time necessary to add the waste.

11.2.4. When the can is full, it is capped and dept in the secondary containment tray pending pickup by the Waste Management group.

11.2.5. A new can is obtained and labeled for future use.

11.3. Used autosampler vials.

11.3.1. Used autosampler vials are accumulated in a glass jar in a secondary containment tray.

11.3.2. The glass jar is labeled with a hazardous waste label and a label indicating its use for waste containing organic compounds.

11.3.3. The glass jar is opened only for the time necessary to add vials.

11.3.4. When the glass jar is full, it is capped and kept in the secondary containment tray pending pickup by the Waste Management group.

11.3.5. A new glass jar is labeled for future use.

11.4. Waste pickup.

11.4.1. Pickup by the Waste Management group of a full bag, can, or glass jar of waste contaminated with organic compounds is requested using the current Chemical Waste Disposal Request (CWDR) form. The current Waste Profile Request Form (WPRF) which describes the waste is referenced on the CWDR.

11.4.2. The Waste Management group picks up the waste for disposal according to Laboratory policy.

12. Source Materials

12.1. Peter M. Eller, Editor, *NIOSH Manual of Analytical Methods*, third edition (National Institute for Occupational Safety and Health, Cincinnati, Ohio, 1984).

12.2. "Hazardous and Mixed Waste," Administrative Requirement 10-3, in *Environment, Safety, and Health Manual*, Los Alamos National Laboratory Manual, Chapter 1 (most recent edition).

Revisions or additions to the procedure are marked (▒▒▒▒). Where a section heading is marked, the entire section has been revised.

TABLE I. GAS CHROMATOGRAPHIC PARAMETERS FOR PAT SOLVENTS

Analyte	B.P. (°C)	Column Program	Injector Temp. (°C)	Transfer Line Temp. (°C)	Retention Time (min)	Internal Standard (R.T.)
Benzene	80.1	58° for 5 min to 120° @ 10/min	250°	280°		Ethylbenzene
Carbon Tetrachloride	76.5	25° for 5 min to 100° @ 10/min	250°	280°	8.4	Chloroform (6.5)
Chloroform	61.7	25° for 5 min to 100° @ 10/min	250°	280°	6.5	Trichloro-ethylene (10.1)
1,2-Dichloroethane	57.3	25° for 5 min to 100° @ 10/min	250°	280°	7.8	Chloroform (6.5)
Methylene chloride	40					
Methyl chloroform	74.1					Trichloroethy-lene
Methyl ethyl ketone	79.6					
Methyl isobutyl ketone	116.9					
p-Dioxane	101	50° for 5 min to 120° @ 10/min	250°	280°	7.2	Toluene (9.12)
Toluene	110.6	50° for 5 min to 120° @ 10/min	250°	280°		Ethylbenzene
Trichloroethylene	87.0	25° for 5 min to 100° @ 10/min	250°	280°	10.1	Chloroform (6.5)
o-Xylene	144.4	50° for 5 min to 120° @ 10/min	250°	280°	12.7	Toluene (9.12)

PETROLEUM HYDROCARBONS, TOTAL RECOVERABLE IN SOIL

Analyte: Petroleum hydrocarbons	**Method No:** IH274
Matrix: Soil	**Range:** Unknown
Procedure: Extraction with fluorocarbon-113 and infrared spectrophotometry	**Precision:** Unknown
Effective Date: 06/03/91	**Author:** Stuart D. Nielsen

SAFETY NOTE: Before beginning this procedure, read all of the Material Safety Data Sheets for the chemicals listed in Sec. 7. Read Sec. 4.3 of the EM-9 Safety Manual for information on personal protective clothing and equipment. Read Sec. 11 of this procedure and Source Material 12.2 for proper waste disposal practices.

1. Principle of Method

1.1. This method is a modification of EPA Method 418.1 (Storet No. 45501). The method is converted from use with a water matrix to use with a soil matrix.

1.2. A known weight of soil is extracted with fluorocarbon-113 (1,1,2-trichloro-1,2,2-trifluoroethane) and the extract is analyzed by infrared spectrophotometry.

1.3. This method is applicable to the measurement of all types of aliphatic hydrocarbon mixtures, although significant amounts of the more volatile hydrocarbons may be lost during sample collection and manipulation.

2. Range, Sensitivity, and Detection Limit

2.1. With dilution of the samples to bring those with absorbances greater than 1.0 au down to the acceptable absorbance range, the range of the method is from 0.6 μg of hydrocarbon in the sample to pure aliphatic hydrocarbon.

2.2. The lower limit of quantitation of this method was found to be 0.05 μg of hydrocarbon per milliliter of extract, which corresponds to 0.6 μg/sample using 12 mL of extractant.

3. Accuracy and Precision

3.1. Precision and accuracy data are not currently available.

4. Interferences

4.1. Any compound which contains an aliphatic carbon-hydrogen bond interferes because the method measures the aliphatic carbon-hydrogen stretch band in the infrared spectrum of the analyte.

5. Advantages and Disadvantages

5.1. An advantage of the method is that it automatically measures the sum of all aliphatic hydrocarbons in the soil sample with one simple measurement.

5.2. A disadvantage of the method is that all compounds present containing aliphatic carbon-hydrogen bonds will be counted as aliphatic hydrocarbons.

6. Apparatus

6.1. Infrared spectrophotometer: preferably a computer-controlled Fourier-transform spectrophotometer to more easily attain the required sensitivity.

6.2. Analytical balance: capable of weighing to at least 100 g with an accuracy of at least four decimal places.

6.3. Glass jars: 30-mL. As received from the manufacturer, many jars contain a residue containing aliphatic carbon-hydrogen bonds. Clean the jars before they are used in the analysis.

6.4. Glass syringe: 25-mL.

6.5. Spectrometer cells: 1-cm path length, quartz.

7. Reagents

7.1. Fluorocarbon-113 (1,1,2-trichloro-1,2,2-trifluoroethane), reagent-grade.

7.2. Aliphatic hydrocarbon mixture to use as a standard: a light mineral oil is the preferred standard, although gasoline, kerosene, or diesel fuel can be used.

8. Calibration and Standards

8.1. Although the standard curve is theoretically linear from zero absorbance to infinite absorbance, precision and accuracy for any infrared determination are highest when the absorbances are kept between 0.1 and 1.0 absorbance units.

8.2. Calibration standards.

8.2.1. Stock standard: Weigh 2-5 mg of the standard hydrocarbon mixture into a tared glass jar. Add 12.0 mL of fluorocarbon-113 to the jar.

8.2.2. Working standards: Dilute portions of the stock standard to give at least three standards with concentrations between 40 and 400 μg/mL. This should give a standard curve between approximately 0.1 and 0.9 absorbance units.

9. Procedure

9.1. Weigh 10-11 g of the soil sample into a tared glass jar.

9.2. Add 12.0 mL of fluorocarbon-113 to the jar. Cap the jar and shake vigorously.

9.3. Sonicate the jar for 30 min.

9.4. Allow the soil to settle. Fill a clean infrared cell with the supernatant liquid.

9.5. Determine the absorbance for each sample and standard over the range from 2700 cm^{-1} through 3100 cm^{-1} using pure fluorocarbon-113 as a reference.

9.6. If the absorbance exceeds 0.9, prepare an appropriate dilution and redetermine the absorbance.

10. Calculations

10.1. Measure the peak absorbance at approximately 2930 cm^{-1}. Measure background absorbances on both sides of the peak cluster at approximately 2800 cm^{-1} and 3010 cm^{-1}.

10.2. Calculate the background at 2930 cm^{-1} by interpolation between those measured on both sides.

10.3. Calculate the absorbance due to the sample by subtracting the calculated background at 2930 cm^{-1} from the peak absorbance.

10.4. Plot a standard curve from the data for the standards by plotting the absorbance value vs. the concentration of the standard in μg/mL.

10.5. Determine the concentration of petroleum hydrocarbons in the extract by comparing the resulting absorbance against the standard curve.

10.6. Calculate the petroleum hydrocarbons in the sample using the following equation.

$$\mu g/g \text{ of soil} = \frac{(C \times V \times D)}{W} ,$$

where C = concentration determined from standard curve,
V = volume of extractant solvent used,
D = extract dilution factor, if necessary, and
W = weight of soil used (g).

11. Proper Waste Disposal Practices

11.1. Solid waste.

11.1.1. Remaining soils are returned to Sample Receiving for disposal as part of the chain of custody procedure.

11.1.2. Solid waste, such as paper wipes or glass pipettes contaminated with organic compounds, is accumulated in a covered can lined with a plastic bag and is kept segregated from solid waste that is not contaminated with organic compounds.

11.1.3. The can is labeled with a hazardous waste label and a label indicating its use for waste contaminated with organic compounds.

11.1.4. The can is opened only for the time necessary to add waste.

11.1.5. When the plastic bag is full, it is sealed with tape, removed from the can, identified as waste contaminated with organic compounds, and placed in a functioning chemical exhaust hood pending pickup by the Waste Management group.

11.1.6. A new plastic bag is put into the waste can for continued use.

11.2. Liquid waste.

11.2.1. Liquid wastes containing organic compounds, such as rinses from syringes, are accumulated in a covered metal can in a secondary containment tray.

11.2.2. The can is labeled with a hazardous waste label and a label indicating its use or waste containing organic compounds.

11.2.3. The can is opened only for the time necessary to add waste.

11.2.4. When the can is full, it is capped and kept in the secondary containment tray pending pickup by the Waste Management group.

11.2.5. A new can is labeled for future use.

11.3. Waste pickup.

11.3.1. Pickup by the Waste Management group of a full bag or can of waste contaminated with organic compounds is requested using the current Chemical Waste Disposal Request (CWDR) form. The current Waste Profile Form that describes the waste is referenced on the CWDR.

11.3.2. The Waste Management group picks up the waste for disposal according to Laboratory policy.

12. Source Materials

12.1. EPA Method 418.1 (Spectrophotometric, Infrared), Petroleum Hydrocarbons, Total Recoverable, Storet No. 45501, Issued 1978.

12.2. "Hazardous and Mixed Waste," Administrative Requirement 10-3, in *Environment, Safety, and Health Manual*, Los Alamos National Laboratory Manual, Chapter 1 (most recent edition).

Revisions or additions to the procedure are marked (▒). Where a section heading is marked, the entire section has been revised.

PETROLEUM HYDROCARBONS, TOTAL RECOVERABLE IN WATER

Analyte: Petroleum hydrocarbons	**Method No.:** IH275
Matrix: Water	**Range:** Unknown
Procedure: Extraction with fluorocarbon-113, infrared spectrophotometry	**Precision:** Unknown
Effective Date: 09/03/91	**Author:** Stuart D. Nielsen

SAFETY NOTE: Before beginning this procedure, read all of the Material Safety Data Sheets for the chemicals listed in Sec. 7. Read Sec. 4.3 of the EM-9 Safety Manual for information on personal protective clothing and equipment. Read Sec. 11 of this procedure and Source Material 12.2 for proper waste disposal practices.

1. Principle of Method

1.1. This method is equivalent to EPA Method 418.1 (Storet No. 45501).

1.2. This method is for the measurement of petroleum hydrocarbons extractable from surface and saline waters and industrial and domestic wastes with fluorocarbon-113 (1,1,2-trichloro-1,2,2-trifluoroethane).

1.3. A known volume of water is extracted with fluorocarbon-113 and the extract is analyzed by infrared spectrophotometry.

1.4. This method is applicable to measurement of all types of aliphatic hydrocarbon mixtures, although significant amounts of the more volatile hydrocarbons may be lost during sample collection and manipulation.

2. Range, Sensitivity, and Detection Limit

2.1. The lower limit of quantitation of this method was found to be 0.05 μg of hydrocarbon per milliliter of extract, which corresponds to 5.0 μg of hydrocarbon in the extracted sample.

2.2. With dilution of the extracts to bring those with absorbances greater than 1.0 absorbance units (au) down to less than 1.0 au, the theoretical range of the method is from 5.0 μg of hydrocarbon in the sample to pure aliphatic hydrocarbon.

3. Accuracy and Precision

3.1. Precision and accuracy data are not currently available.

4. Interferences

4.1. Any compound that contains an aliphatic carbon-hydrogen bond interferes, because this method measures the aliphatic carbon-hydrogen stretch band in the infrared spectrum of the analyte.

5. Advantages and Disadvantage

5.1. An advantage of the method is that it automatically measures the sum of all aliphatic hydrocarbons in the sample with one measurement.

5.2. A disadvantage of the method is that all compounds present containing aliphatic carbon-hydrogen bonds will be counted as aliphatic hydrocarbons.

6. Apparatus

6.1. Infrared spectrophotometer: preferably a computer-controlled Fourier-transform spectrophotometer to more easily attain the required sensitivity.

6.2. Separatory funnel: 200-mL, with Teflon stopcock.

6.3. Spectrometer cells: 1-, 5- and 10-cm path length, quartz.

6.4. Volumetric flasks: 100-mL.

6.5. Filter funnels.

7. Reagents

7.1. Fluorocarbon-113 (1,1,2-trichloro-1,2,2-trifluoroethane), reagent-grade.

7.2. Aliphatic hydrocarbon mixture to use as a standard: a light mineral oil is the preferred standard, although gasoline, kerosene, or diesel fuel can be used.

7.3. Hydrochloric acid (1:1): Mix equal volumes of concentrated HCl and distilled water.

7.4. Sodium sulfate (anhydrous crystal).

8. Calibration and Standards

8.1. Although the standard curve is theoretically linear from zero absorbance to infinite absorbance, precision and accuracy for any infrared determination are highest when the absorbances are kept between 0.1 and 1.0 absorbance units.

8.2. Calibration standards.

8.2.1. Stock standard: weigh 20-50 mg of the standard hydrocarbon mixture into a tared 100-mL volumetric flask. Dilute to volume with fluorocarbon-113.

8.2.2. Working standards: dilute portions of the stock standard to give at least three standards with concentrations between 40 and 400 μg/mL. This should give a standard curve between approximately 0.1 and 0.9 absorbance units.

9. Procedure

9.1. Mark the sample bottle at the water meniscus for later determination of sample volume. If the sample was not acidified at the time of collection, add 5 mL of hydrochloric acid to the sample bottle. After mixing, check the pH by touching pH-sensitive paper to the cap to ensure that the pH is 2 or lower. Add more acid if necessary.

9.2. Pour the sample into a separatory funnel.

9.3. Add 30 mL of fluorocarbon-113 to the sample bottle and rotate the bottle to rinse the sides. Transfer the solvent to the separatory funnel. Extract by shaking vigorously for 2 min. Allow the layers to separate.

9.4. Filter the solvent layer through anhydrous sodium sulfate into a 100-mL volumetric flask.

9.5. Repeat Steps 9.3 and 9.4 twice more with 30-mL portions of fresh solvent, combining all solvent in the volumetric flask.

9.6. Rinse the tip of the separatory funnel and sodium sulfate with a total of 5-50 mL of solvent and collect the rinsings in the volumetric flask. Dilute the extract to 100 mL.

9.7. Fill a clean 1-cm cell with the extract. Determine the absorbance over the range 2700-3100 cm^{-1} using pure fluorocarbon-113 as a reference. Refer to the spectrometer operation manual for instructions. If the absorbance exceeds 0.9, prepare an appropriate dilution and rerun the absorbance curve. If the absorbance is too low (<1.0), use longer cells to improve the sensitivity.

9.8. Calibrate the instrument for the appropriate cells using a series of at least three working standards covering the range 0.1-0.9 absorbance units.

10. Calculations

10.1. Measure the peak absorbance at approximately 2930 cm^{-1}. Measure background absorbances on both sides of the peak cluster at approximately 2800 cm^{-1} and 3010 cm^{-1}.

10.2. Calculate the background at 2930 cm^{-1} by interpolation between those measured on the two sides.

10.3. Calculate the absorbance due to the sample by subtracting the calculated background at 2930 cm^{-1} from the peak absorbance.

10.4. Plot a standard curve from the data for the standards by plotting the absorbance value vs. the concentration of the standard in mg petroleum hydrocarbons per 100 mL solution.

10.5. Determine the concentration of petroleum hydrocarbons in the extract by comparing the resulting absorbance against the standard curve.

10.6. Calculate the petroleum in the sample using the following equation.

$$\text{mg/L petroleum hydrocarbons} = \frac{R \times D}{V} ,$$

where R = concentration of petroleum hydrocarbons as determined from the standard curve (mg),
D = extract dilution factor, if necessary, and
V = volume of sample (L).

11. Proper Waste Disposal Practices

11.1. Solid waste.

11.1.1. Solid waste, such as paper wipes or glass pipettes contaminated with organic compounds, is accumulated in a covered can lined with a plastic bag and is kept segregated from solid waste that is not contaminated with organic compounds.

11.1.2. The can is labeled with a hazardous waste label and a label indicating its use for waste contaminated with organic compounds.

11.1.3. The can is opened only for the time necessary to add waste.

11.1.4. When the plastic bag is full, it is sealed with tape, removed from the can, identified as waste contaminated with organic compounds, and placed in a functioning chemical exhaust hood pending pickup by the Waste Management group.

11.1.5. A new plastic bag is put into the waste can for continued use.

11.2. Liquid waste.

11.2.1. Liquid wastes containing organic compounds, such as rinses from syringes, are accumulated in a covered metal can in a secondary containment tray.

11.2.2. The can is labeled with a hazardous waste label and a label indicating its use or waste containing organic compounds.

11.2.3. The can is opened only for the time necessary to add waste.

11.2.4. When the can is full, it is capped and kept in the secondary containment tray pending pickup by the Waste Management group.

11.2.5. A new can is labeled for future use.

11.3. Waste pickup.

11.3.1. Pickup by the Waste Management group of a full bag or can of waste contaminated with organic compounds is requested using the current Chemical Waste Disposal Request (CWDR) form. The current Waste Profile Form that describes the waste is referenced on the CWDR.

11.3.2. The Waste Management group picks up the waste for disposal according to Laboratory policy.

12. Source Materials

12.1 EPA Method 418.1 (Spectrophotometric, Infrared), Petroleum Hydrocarbons, Total Recoverable, Storet No. 45501, Issued 1978.

12.2. "Hazardous and Mixed Waste," Administrative Requirement 10-3, in *Environment, Safety, and Health Manual*, Los Alamos National Laboratory Manual, Chapter 1 (most recent edition).

Revisions or additions to the procedure are marked (▒▒▒). Where a section heading is marked, the entire section has been revised.

POLYNUCLEAR AROMATIC HYDROCARBONS IN AIR-
HIGH-PERFORMANCE LIQUID CHROMATOGRAPHY

Analyte: Polynuclear aromatic hydrocarbons (PAHs)	**Method No.:** IH330
Matrix: Air	**Detection Limit:** Varies with compound
Procedure: Adsorption on filters and XAD-2 solid sorbent; desorption with cyclohexane; analysis by high-performance liquid chromatography	**Precision:** ± 10% RSD
Effective Date: 12/07/82	**Author:** Stuart Nielsen

SAFETY NOTE: Before beginning this procedure, read all of the Material Safety Data Sheets for the chemicals listed in Sec. 5. Read Sec. 4.3 of the EM-9 Safety Manual for information on personal protective clothing and equipment. Read Sec. 9 of this procedure and Source Material 10.2 for proper waste disposal practices.

1. Principle of Method

1.1. A known volume of air at an average flow rate of 2.0 L/min is pumped through a filter train consisting of a 2.0-μ pore size, 37-mm diameter PTFE-laminated membrane filter backed by a gasket cut from a cellulose support pad in a three-piece polystyrene cassette backed up with an XAD-2 tube (Supelco ORBO-43 or equivalent) with a 100-mg front section and a 50-mg backup section.

1.2. The filters and the XAD-2 are desorbed with cyclohexane. After a solvent exchange to acetonitrile, the extracts are examined by high-performance liquid chromatography with a reverse phase, 5-μm C_{18} column and a diode array detector followed by a fluorescence detector.

2. Precision and Detection Limits

2.1. Precision of the analytical method was determined to be ±10% by averaging the standard deviations of representative polynuclear aromatic hydrocarbons run as quality assurance samples.

2.2. Minimum detection limits vary for different analytes. Representative analytes are shown in Table I.

3. Interferences

3.1. Any compound with the same retention time as one of the polynuclear aromatic hydrocarbons (PAH) of interest could be an interferant. Extraction solvent blanks should be run prior to the extractions to check for interferences.

3.2. Heat, ozone, NO_2, or UV light may cause sample degradation. As far as possible the samples should be kept in the dark, wrapped with aluminum foil, and/or in amber containers.

TABLE I. SELECTED COMPOUNDS FOR LIQUID CHROMATOGRAPHY

Analyte	Retention time (min)	Minimum detection limit per sample (μg)
Naphthalene	12.4	0.25
Acenaphthalene	2.8	0.35
Acenaphthene	3.6	0.8
Fluorene	3.9	0.25
Phenanthrene	4.7	0.1
Anthracene	5.8	0.05
Fluoranthene	6.8	0.15
Pyrene	7.7	0.2
Benzo[a]anthracene	11.2	0.15
Chrysene	12.1	0.15
Benzo[e]pyrene	14.0	0.2
Benzo[b]fluoranthene	14.8	0.1
Benzo[k]fluoranthene	16.5	0.15
Benzo[a]pyrene	17.3	0.2
Dibenz[a,h]anthracene	20.0	0.2
Benzo[ghi]perylene	20.0	0.2
Indeno[1,2,3-cd]pyrene	21.2	0.2

Note: Actual retention times will vary with individual columns and column age.

3.3. Retention time on a single column cannot be considered conclusive proof of chemical identity. Use the UV-visible spectrum of the peak in question, from the diode array detector, to confirm the identity of the compound. A sample of bulk mixture can be submitted at the same time as the sample tubes so that chemical identification of possible interferences can be made.

4. Apparatus

4.1. Vial: scintillation, 20-mL, glass, PTFE-lined cap.

4.2. Culture tubes: PTFE-lined screw cap, 13 mm x 100 mm.

4.3. Forceps.

4.4. Syringe or pipette: 5-mL.

4.5. Syringe or micropipettes: 1- to 100-μL.

4.6. Ultrasonic bath.

4.7. High-performance liquid chromatograph (HPLC): with gradient capability, diode array and fluorescence (excitation at 240 nm, emission at 425 nm) detectors in series, and electronic integrator.

4.8. HPLC column: 15 cm x 4.6 mm, reverse phase, 5-μm C_{18} [HC-ODS-SILX (Perkin-Elmer Corp.), Vydac 201TP (The Separations Group) or equivalent].

4.9. Volumetric flasks: 10- and 100-mL.

4.10. Kuderna-Danish concentrators.

4.11. Balance: capable of 0.1 mg resolution.

4.12. Filters: 0.45-μm, PTFE or nylon, for filtering sample solutions.

4.13. Autosampler vials: amber, 1-mL, Hewlett Packard, Albuquerque, New Mexico.

5. Reagents

5.1. Cyclohexane (pesticide-grade). Burdick & Jackson, Muskegon, Michigan, or equivalent.

5.2. Acetonitrile (pesticide-grade). Burdick & Jackson, Muskegon, Michigan, or equivalent.

5.3. Water (HPLC-grade).

5.4. Acetophenone for internal standard.

5.5. PAH standards, appropriate to PAH-containing matrix sampled. If possible obtain commercially prepared solutions containing 100 μg/mL (mg/L) of the PAH.

SPECIAL PRECAUTIONS: Treat all polynuclear aromatic hydrocarbons as carcinogens. Regularly check counter tops and equipment with "black light" for fluorescence as an indicator of contamination by PAH.

6. Calibration and Standards

6.1. Check the purity of standards used by injecting aliquots of 100 μg/mL solutions into the HPLC using conditions listed in Step 7.2.3. Obtain percent purities from the chromatograms.

6.2. Internal standard solution.

6.2.1. Weigh 20 mg of acetophenone into a 10-mL volumetric flask. Fill to volume with cyclohexane. This 2000-mg/L solution is used to spike all standards and samples.

6.2.2. Stopper the flask, wrap the top with parafilm, and store in the refrigerator when not in use. This solution is good for several months.

6.3. Composite standards.

6.3.1. Make up appropriate composite standards to run with each batch of samples or use commercial mixes of the PAHs at the proper concentrations.

6.3.2. To make up the composite standards add the following amounts of 100 μg/mL PAH standards to the receiving flask of a Kuderna-Danish concentrator.

Volume of 100-μg/mL standard	Conc. (μg/mL)
200 μL	20.0
100 μL	10.0
50 μL	5.0
10 μL	1.0

6.3.3. Concentrate each of these solutions to near dryness. To avoid loss of volatile components, do not allow the standard to go to dryness at any time.

6.3.4. Spike 10 μL of the 2000-mg/L acetophenone solution into each standard.

6.3.5. Add approximately 1 mL of acetonitrile, take to near dryness, and adjust to 1.0 mL with acetonitrile.

6.3.6. Transfer the solution to an autosampler vial.

6.4. Calibration and retention times.

6.4.1. Analyze each PAH of interest in the range given in Steps 6.3.1 and 6.3.2 using the conditions given in Step 7.2.

6.4.2. Prepare a standard curve for each PAH. Plot the data on linear graph paper with concentration in μg/mL on the x-axis and the area of the PAH peak divided by the area of the acetophenone peak on the y-axis.

7. Procedure

7.1. Sample preparation.

7.1.1. Filters.

7.1.1.1. Immediately after sampling, the filters should have been carefully transferred to scintillation vials and the vials wrapped in aluminum foil. This is necessary to avoid loss of analytes by sublimation and/or degradation by UV light.

7.1.1.2. Add 5.0 mL of cyclohexane to each scintillation vial. Spike 10 μL of the internal standard solution into each vial. Start media and reagent blanks at this step.

7.1.1.3. Cap and let sit 15 to 20 min in an ultrasonic bath. (NOTE: Soxhlet extraction may be required when large amounts of highly adsorptive particulate matter, such as fly ash or diesel soot, are present).

7.1.1.4. Filter the extracts through 0.45-μm membrane filters into Kuderna-Danish concentrators.

7.1.1.5. Take the samples to near dryness. To avoid loss of volatile components, do not allow the sample to go to dryness at any time.

7.1.1.6. Add approximately 1 mL of acetonitrile, take to near dryness, and adjust the final volume to 1.0 mL with acetonitrile.

7.1.1.7. Transfer the solution to an autosampler vial.

7.1.2. Tubes.

7.1.2.1. Immediately after sampling the tubes should have been capped and wrapped in aluminum foil. This is necessary to avoid loss of analytes by degradation by UV light.

7.1.2.2. Score each tube with a file and break near the top of the glass wool in the first section. Place the glass wool and sorbent from the front section into a culture tube. Start the media and reagent blanks at this step.

7.1.2.3. Discard the foam plug. Transfer the back section of sorbent to a second culture tube.

7.1.2.4. Add 5.0 mL of cyclohexane to each tube. Allow to stand, with occasional shaking, for at least 1/2 h.

7.1.2.5. Add 10 μL of the acetophenone solution.

7.1.2.6. Treat the extracts as in Steps 7.1.1.4 through 7.1.1.7.

7.2 Analysis.

7.2.1. Set up the HPLC to use the following conditions:

- Reverse phase, 5-μm C_{18}, column, 15 cm x 4.6 mm.
- Initial liquid phase 60% acetonitrile/40% water, 2.0 mL/min.
- Linear gradient 60% acetonitrile to 100% acetonitrile in 20 min with a hold at 100% acetonitrile for 20 min. (NOTE: Hold longer if necessary to prevent carryover of background, e.g., from coal dust.)
- Linear gradient for 5 min to restore initial conditions.
- Fluorescence excitation at 240 nm and emission at 425 nm.
- Sample injection 10 μL.

7.2.2. Equilibrate column at the initial conditions for at least 15 min before injecting the first sample.

7.2.3. Inject sample aliquot and start mobile phase gradient.

7.2.4. Flush the injection valve with acetonitrile after each run.

7.2.5. After the column has reequilibrated, repeat 7.2.3 for each sample and standard.

7.2.6. If the sample is above the range of the calibration curve, dilute and reanalyze.

7.2.7. Compare the chromatogram of the sample to that of the standards. Use retention times to determine a match and confirm the match by examination of the UV-visible spectra of the corresponding peaks.

8. Calculations

8.1. Read the concentration of each analyte observed in each sample solution from the appropriate standard curve.

8.2. Make corrections for dilutions and for the blank if necessary.

9. Proper Waste Disposal Practices

9.1. Solid waste.

9.1.1. Solid waste, such as paper wipes and glass Pasteur pipettes contaminated with organic compounds, is accumulated in a covered metal can lined with a plastic bag and is kept segregated from solid waste that is not contaminated with organic compounds.

9.1.2. The can is labeled with a hazardous waste label suitable for waste contaminated with this type of organic compounds.

9.1.3. The can is opened only for the time necessary to add waste.

9.1.4. When the plastic bag is full, it is sealed with tape, removed from the can, identified as waste contaminated with organic compounds, and placed in a functioning chemical exhaust hood pending pickup by the Waste Management group.

9.1.5. A new plastic bag is put into the waste can for continued use.

9.2. Liquid waste.

9.2.1. Liquid organic wastes, such as rinses of syringes and Pasteur pipettes, are accumulated in a covered metal can in a secondary containment tray.

9.2.2. The can is labeled with a hazardous waste label suitable for this type of waste.

9.2.3. When the can is full, it is capped and kept in the secondary containment tray pending pickup by the Waste Management group.

9.2.4. A new can is labeled for future use.

9.3. Excess sample extracts and standard solutions.

9.3.1. Autosampler vials containing excess sample extracts and standard solutions are accumulated in a glass jar in a secondary containment tray.

9.3.2. The glass jar is labeled with a hazardous waste label suitable for this type of waste.

9.3.3. The glass jar is opened only for the time necessary to add the vials.

9.3.4. When the glass jar is full it is kept in the secondary containment tray pending pickup by the Waste Management group.

9.3.5. A new glass jar is labeled for future use.

9.4. Waste pickup.

9.4.1. Pickup by the Waste Management group of a full bag, can, or glass jar of waste is requested using the current Chemical Waste Disposal Request (CWDR) form. The current Waste Profile Request Form (WPRF) which describes the waste is referenced on the CWDR.

9.4.2. The Waste Management group picks up the waste for disposal according to Laboratory policy.

10. Source Materials

10.1. "Polynuclear Aromatic Hydrocarbons," NIOSH Manual of Analytical Methods, third edition, Method No. 5506, issued 5/15/85, National Institute for Occupational Safety and Health, Cincinnati, Ohio.

10.2. "Hazardous and Mixed Waste," Administrative Requirement 10-3, in *Environment, Safety, and Health Manual*, Los Alamos National Laboratory Manual, Chapter 1 (most recent edition).

This procedure has been extensively revised and detailed changes are not redlined.

LA-10300-M Vol. II
Manual

UC-907
Issued: May 1986
Revised: November 1993

Health and Environmental Chemistry: Analytical Techniques, Data Management, and Quality Assurance

Edited by Margaret A. Gautier

Los Alamos
NATIONAL LABORATORY
Los Alamos, New Mexico 87545

CONTENTS

Preface E-7

Acknowledgments E-9

Abstract E-11

The page numbering convention used in this manual consists of the specific procedure number (shown at left in list below) followed by the page number for that procedure. Thus, ER110-2 is page two of procedure ER110. The right column in the list below gives each procedure's status or effective date.

Environmental Chemistry Analytical Techniques

Environmental Analytical Procedures - Inorganic

EI100	Arsenic in Water and Soil Extracts—Graphite Furnace AA	05/93
EI105	Barium in Water and Soil Extracts—Flame AA	09/92
EI120	Cadmium in Water and Soil Extracts—Graphite Furnace AA	05/93
EI125	Calcium in Water and Soil Extracts—Flame AA	09/92
EI130	Chromium in Oil, Water, and Soil Extracts—Flame AA	09/92
EI135	Chromium in Water and Soil Extracts—Graphite Furnace AA	05/93
EI140	Copper in Water and Soil Extracts—Flame AA	09/92
EI145	Iron in Water and Soil Extracts—Flame AA	09/92
EI150	Lead in Water and Soil Extracts—Graphite Furnace AA	05/93
EI160	Magnesium in Water and Soil Extracts—Flame AA	09/92
EI165	Mercury in Water—Cold Vapor AA	In Progress
EI170	Nickel in Water and Soil Extracts—Flame AA	09/92

EI175	Potassium in Water and Soil Extracts—Flame AA	09/92
EI185	Selenium in Water and Soil Extracts—Graphite Furnace	05/93
EI190	Silver in Water and Soil Extracts—Flame AA	09/92
EI195	Sodium in Water and Soil Extracts—Flame AA	09/92
EI200	Thallium on Filters—Graphite Furnace AA	05/93
EI205	Thallium in Water and Soil Extracts—Graphite Furnace AA	05/93
EI210	Zinc in Water and Soil Extracts—Flame AA	09/92
EI300	Barium in Soils—Acid Digestion and ICPAES	Retired
EI400	Anions in Water and Waste Water—IC	06/92
EI520	pH of Soil	10/91
EI630	Arsenic, Antimony, Tungsten, and Molybdenum in Silicates—RENA	Retired
EI730	Mercury in Environmental Materials—Cold Vapor Gold Film Analyzer	10/90
EI735	Sample Preparation for Spectrochemical Analyses of Total Recoverable Elements (EPA Method 200.2)	12/90
EI790	Water (Bound and Unbound) in Geological Matrices—High Temperature Coulometry	Retired

Environmental Analytical Procedures—Organic

EO400	Polychlorinated Biphenyls (PCBs) in Oil: Solvent Extraction—GC/ECD	03/93
EO410	Polychlorinated Biphenyls (PCBs) in Soil: Solvent Extraction—GC/ECD	03/93
EO420	Polychlorinated Biphenyls (PCBs) in Swipes: Solvent Extraction—GC/ECD	03/93
EO430	Polychlorinated Biphenyls (PCBs) in Water: Solvent Extraction—GC/ECD	03/93

EO500	Semivolatile Organics in Solid Matrices: Solvent Extraction—GC/MS	05/93
EO530	Semivolatile Organics in Aqueous Matrices: Solvent Extraction—GC/MS	05/93
EO720	Volatile Organic Compounds in Soil and Sediment: Capillary Column Technique—GC/MS (EPA SW846 Method 8260)	05/93
EO730	Volatile Organic Compounds in Water: Precision Dynatech Autosampler Capillary Column Technique—GC/MS (EPA SW846 Method 8260)	05/93

Environmental Analytical Procedures — Radiochemical

ER100	Gross Alpha and Beta Activity in Environmental Matrices—Gas-Flow Proportional Counting	04/92
ER110	Americium-241 in Environmental Matrices (Greater than 2-Gram Samples)—Alpha Spectrometry	02/93
ER120	Americium-241 in Environmental Matrices (Less than 2-Gram Samples)—Alpha Spectrometry	08/92
ER130	Gamma-Ray-Emitting Nuclides in Environmental Matrices—Instrumental Method	04/93
ER140	Qualitative Gamma-Ray Scan of Environmental Matrices	04/93
ER150	Gross Gamma in Environmental Matrices	06/93
ER160	Plutonium in Environmental Matrices—Alpha Spectrometry	04/93
ER165	Plutonium in Sediment (Kilogram Samples)	In Progress
ER170	Radium-226 in Geologicals—Gamma-Ray Spectrometry	04/91
ER180	Radium-226 in Water—Radon Emanation	04/93
ER190	Strontium-90 in Environmental Matrices	08/92
ER200	Thorium-230 in Geologicals—Alpha Spectrometry	05/91
ER210	Tritium in Environmental Matrices—Distillation Procedure	06/92

ER230	Uranium-235/Uranium-238 Ratio in Geologicals and Natural Waters—RTNA	Retired
ER240	Uranium in Air Filters—DNA	Retired
ER250	Uranium in Biological Matrices—DNA	Retired
ER260	Uranium in Geologicals—DNA	Retired
ER270	Uranium in Water—DNA	Retired
ER290	Total Uranium and $^{235}U/^{238}U$ Ratio in Water—ICPMS	02/91
ER300	Depleted Uranium in Soils—IENA	Retired

Mobile Laboratory Analytical Techniques

Mobile Laboratory Analytical Procedures—Organic

MLO274	Petroleum Hydrocarbons, Total Recoverable in Soil—Mobile Laboratory Method	04/93
MLO410	Polychlorinated Biphenyls (PCBs) in Soil—Mobile Laboratory Method	03/93
MLO500	Semivolatile Organics in Solid Matrices: Solvent Extraction-GC/MS—Mobile Laboratory Method	04/93
MLO510	Extraction of Semivolatile Organic Analytes in Solid Matrices for Analysis by GC/MS—Mobile Laboratory Method	04/93
MLO720	Volatile Organic Compounds in Soil Sediment—Mobile Laboratory Method	04/93

Mobile Laboratory Analytical Procedures—Radiochemical

MLR100 Gross Alpha/Beta Screening of Silicates—
Mobile Laboratory Method 02/93

MLR200 Gross Gamma Screening of Silicates—
Mobile Laboratory Method 02/93

MLR300 Gross Tritium Analysis of Silicates—
Mobile Laboratory Method 02/93

MLR400 Gross Moisture Analysis of Silicates—
Mobile Laboratory Method 02/93

ARSENIC IN WATER AND SOIL EXTRACTS — GRAPHITE FURNACE AA

Analyte: Arsenic	**Method No.:** EI100
Matrix: Water, waste water, and soil extracts	**Detection Limit:** 2.0 μg/L
Procedure: Graphite furnace atomic absorption	**Accuracy and Precision:** 102% ± 1.02% RSD
Effective Date: 09/25/91	**Authors:** Michael G. Bell Barbara J. Hemberger

SAFETY NOTE: Before beginning this procedure, read all of the Material Safety Data Sheets for the chemicals listed in Sec. 6. Read Sec. 4.3 of the EM-9 Safety Manual for information on personal protective clothing and equipment. Read Sec. 11 of this procedure and Source Material 12.6 for proper waste disposal practices.

1. Principle of Method

1.1. This procedure is based on Environmental Protection Agency (EPA) method 206.2 and SW846 method 7060.

1.2. Arsenic in solution may be readily determined by graphite furnace atomic absorption spectroscopy. The method is applicable to As in drinking, surface, and saline waters and in domestic and industrial wastes.

1.3. Drinking water free of particulate matter may be analyzed directly. Ground water, other aqueous samples, TCLP extracts, industrial wastes, soils, sludges, sediments, and other solid wastes require digestion before analysis.

2. Accuracy and Precision

2.1. The determination of arsenic in 19 in-house quality control samples (55 μg/L) over an 8-month period had a mean of 56.3 μg/L and a relative standard deviation (RSD) of 1.02%.

3. Collection and Storage of Samples.

3.1. Preserve samples with nitric acid (HNO_3) at a pH <2.0. Complete analysis within 6 months.

4. Interferences

4.1. Contamination is of prime concern during sample preparation. Periodically clean the work area, including the bench top, to eliminate environmental contamination. Use acid-washed sample cups in the autosampler.

4.2. Chemical interferences can be controlled by the addition of a matrix modifier to all samples and standards. Refer to Perkin-Elmer chart 0993-8199 Rev. D (11/89), or to the PE *Methods of Analysis for AAS*, for the appropriate matrix modifier.

4.3. Silica from the glassware will grow into the sample solution during and following sample processing. To control this problem, use disposable sterile 50-mL polypropylene centrifuge tubes in the sample digestion steps.

5. Apparatus

5.1. Centrifuge tubes: 50-mL, sterile polypropylene.

5.2. Rainin pipettes with disposable tips.

5.3. Wash bottles: 125-mL, polypropylene, screw tops.

5.4. Hot plate: with aluminum heating block drilled to hold centrifuge tubes.

5.5. Perkin-Elmer 5000 atomic absorption instrument: equipped with a Zeeman graphite furnace or equivalent.

5.6. Required gas for the instrument is ultrapure argon.

6. Reagents

6.1. Nitric acid (low-temperature redistilled acid, LTRD).

6.2. Hydrochloric acid (low-temperature redistilled acid, LTRD).

6.3. Double-deionized water.

6.4. ASTM Type I water (>10 MΩ/cm resistivity, <0.1 μmho/cm conductivity).

6.5. Appropriate matrix modifier for all samples, standards, and QCs.

6.6. Secondary standards for making the appropriate standard curves.

7. Sample Preparation Procedure

7.1. To determine total recoverable elements in water, waste water, and soil extracts, take a 50-mL aliquot from an acid-preserved sample containing not more than 0.25% (wt/vol) total solids. Place the aliquot in a sterile 50-mL disposable polypropylene centrifuge tube.

7.1.1. Add 500 μL of LTRD HNO_3 and 250 μL of Ultrex or LTRD HCl to each sample.

7.1.2. Heat on a hot plate without boiling (approximately 85°C) until the volume is reduced to 5-10 mL.

7.1.3. Loosely cover the tube with the cap and reflux for 30 min.

7.1.4. Allow the sample to cool and dilute to 50 mL with ASTM Type I water.

7.1.5. Run one digested blank and one digested spike for each digested batch.

7.1.6. Run a duplicate and a spike for 10-20% of the samples.

7.1.7. For TCLP samples, run a spike for every sample and 20% duplicates.

7.1.8. The analysis should be performed before the EPA regulatory holding times expire.

7.1.9. Add sample and standards to acid-cleaned sample cups.

8. Instrument Procedure

8.1. Instrument power and gases check.

8.1.1. Turn the **POWER** switch on the PE5000 atomic absorption (AA) to **ON**.

8.1.2. Turn **ON** the argon supply valve after checking the pressure at the tank. Pressure must be over 100 psi or the tank must be changed.

8.1.3. Turn the AA switch from **STANDBY** mode to **RUN**.

8.1.4. Make sure the exhaust hood over the graphite furnace is functioning.

8.2. Instrument setup.

8.2.1. Insert the arsenic lamp into the turret oriented toward the ETVAA and plug it in.

8.2.2. Enter **turret lamp number** into keyboard.

8.2.3. Enter recommended **lamp milliamps** (mA) or **watts** depending on lamp type (EDL/HCL).

8.2.3.1. Warm up the EDL and/or HCL lamp for at least 20 min.

8.2.4. Enter **lamp slit width** using **LOW SLIT** key for ETVAA.

8.2.5. Enter **lamp wavelength** using **LAMBDA PEAK** key.

8.2.6. Turn AA switch inside lamp housing to **ICP/ZAA** position.

8.3. Keyboard setup.

8.3.1. Set **SIGNAL** key to **PK AREA** (peak area).

8.3.2. Turn **REC ABS** (record absorbance) signal key **ON**.

8.3.3. Enter **AVG** (average) number (if used).

8.3.4. Enter **CONC MODE** (concentration).

8.4. Furnace setup.

8.4.1. Press **ZAA** key.

8.4.2. Turn **ACCESSORY** knob to **ON** position.

8.4.3. Turn chiller **ON** and check that the water level is above the coils.

8.4.4. Check that the water bottle for distilled water rinse on the autosampler is full.

8.4.5. Turn **ON** the HGA-500 programmer.

8.4.5.1. Enter the temperature program for the element from the ETVAA procedure manual and store the procedure number.

8.5. Computer setup.

8.5.1. Turn PE AA Data System 10 computer **master switch** to **ON**.

8.5.2. Set up ID/WT file.

8.5.3. Turn **print button** on PE5000 keyboard **ON** and store the program.

8.6. Set up autosampler.

8.6.1. Recalibrate the standard curve every 8 to 12 samples.

8.6.2. Enter the number of standards (# stds).

8.6.3. Enter the last sample number (last samp).

8.6.4. Enter the sample volume (samp vol).

8.6.5. Enter the alternate volume (alt vol) for the matrix modifier if used.

8.6.6. Enter the instrument program number (inst prog).

8.6.7. Enter the HGA program number (HGA prog).

8.7. Graphite furnace setup.

8.7.1. Open the furnace and clean or replace the graphite tube. Use the tube with or without the platform depending on the element.

8.7.2. If inserting a new tube, condition it with the manual temperature key.

8.7.3. Using the alignment tool, reinsert the graphite tube and close the furnace.

8.7.4. Using the manual temperature key, set the pyrometer to the atomization temperature of the element and balance the lights (red/green) using the calibration (CAL) knob.

8.7.5. Place the AS40 in **STANDBY** mode and align the autosampler arm. Check the depth of the sample delivery inside the tube and inside the samples. Exit **STANDBY** mode.

8.7.6. Remove and check the furnace lenses. Reinsert the lenses and check the absorbance. If the absorbance reads above 0.100, clean the lenses.

8.7.7. Put samples and standards into the autosampler tray and cover with the dust cover to prevent contamination.

8.7.8. Put the matrix modifier in the holder position, if required.

8.7.9. Check the blank and standards manually.

8.7.10. Calculate the characteristic concentration (cc). If it is within ±20% of chart value (0993-8199 Rev. D 11/89) start the run.

8.7.11. Enter **collect data** mode on PE Data System 10 computer and follow instructions.

8.7.12. After run is complete, press to **DISK** key on PE Data System 10 **twice**.

8.7.13. Select **report** mode on the computer, follow instructions, and print out the final report.

8.7.14. When finished, shut off the chiller, argon gas supply, lamps, EDL power supply, and computer.

8.7.15 Place the autosampler, HGA Programmer, and PE5000 in standby mode.

9. Emergency Shutdown Procedure

9.1. In case of power failure, turn **POWER** switch on PE5000 AA to **OFF**.

9.2. Turn **OFF** the gas valves.

9.3. Follow building power failure procedures.

10. Calculations

10.1. Characteristic concentration (cc).

$$cc = \frac{C \times V \times 0.0044}{A_s},$$

where cc = characteristic concentration for ETVAA,
C = concentration of standard, (μg/L)
V = sample aliquot, (μL)
A_s = absorbance of standard, and
0.0044 = 1% absorbance.

11. Proper Waste Disposal Practices

11.1. Solid waste.

11.1.1. Solid waste contaminated with hazardous chemicals above the level of concern is not normally generated. This waste can be placed in the usual trash receptacles in the labs at TA-50.

11.1.2. If a solid waste is generated that may be contaminated at a level of concern, the appropriate paperwork is completed on a case-by-case basis.

11.1.2.1. Complete a Waste Profile Request Form (WPRF) describing the solid waste and send it to the Waste Management group for review.

11.1.2.2. If the Waste Management group determines that the solid waste is contaminated below the level of concern, dispose of the waste as ordinary laboratory trash.

11.1.2.3. If the Waste Management group determines that the solid waste is contaminated above the level of concern, request pickup of the contaminated waste as described in Sec. 11.3.

11.2. Liquid waste.

11.2.1. Accumulate liquid waste containing hazardous contaminants, such as solutions of trace metals above the limits posted for dumping at each lab sink at TA-50, in a coated glass jar in a secondary containment tray and keep it segregated from liquid waste contaminated with listed organics or cyanide greater than 0.5 ppm.

11.2.2. Label the bottle with a hazardous waste label, a corrosive label, a toxic label, and a label indicating its use for trace metal waste. Date the label.

11.2.3. Open the bottle only for the time necessary to add waste.

11.2.4. Keep full bottles in the secondary containment tray pending pickup by the Waste Management group.

11.2.5. Label a new bottle for further use.

11.2.6. Dump liquid inorganic wastes which do not contain any EPA-listed components, or which have toxic metals below the limits posted at lab sinks at TA-50, directly into the lab sink.

11.3. Waste pickup.

11.3.1. Request pickup by the Waste Management group of solid waste or a full bottle of liquid waste containing trace metals using the current Chemical Waste Disposal Request Form (CWDR). The current Waste Profile Request Form (WPRF) that describes the waste is referenced on the CWDR.

11.3.2. The Waste Management group picks up the waste for disposal in accord with Laboratory policy.

12. Source Material

12.1. *Analytical Methods for Atomic Absorption Spectrophotometry*, (Perkin-Elmer, Norwalk, Conn., 1976).

12.2. *Instructions: Zeeman/5000 System*, (Perkin-Elmer, Norwalk, Conn., 1982).

12.3. Methods for Chemical Analysis of Water and Wastes, EPA-600/4-79-020 U.S. Environmental Protection Agency (rev. March 1983).

12.4. Perkin-Elmer chart 0993-8199 Rev. D (11/89).

12.5. "Test Methods for Evaluation of Solid Waste: Laboratory Manual of Physical and Chemical Methods," EPA report no. SW-846 (November 1986).

12.6. "Hazardous and Mixed Waste," Administrative Requirement 10-3, in *Environment, Safety, and Health Manual*, Los Alamos National Laboratory Manual, Chapter 1 (most recent edition).

Revisions or additions to the procedure are marked (▒). Where a section heading is marked the entire section has been revised.

CADMIUM IN WATER AND SOIL EXTRACTS — GRAPHITE FURNACE AA

Analyte: Cadmium	**Method No.:** EI120
Matrix: Water, waste water, and soil extracts	**Detection Limit:** 0.1 μg/L
Procedure: Graphite furnace atomic absorption	**Accuracy and Precision:** 102% ± 1.02% RSD
Effective Date: 09/25/91	**Authors:** Michael G. Bell Barbara J. Hemberger

SAFETY NOTE: Before beginning this procedure, read all of the Material Safety Data Sheets for the chemicals listed in Sec. 6. Read Sec. 4.3 of the EM-9 Safety Manual for information on personal protective clothing and equipment. Read Sec. 11 of this procedure and Source Material 12.6 for proper waste disposal practices.

1. Principle of Method

1.1. This procedure is based on Environmental Protection Agency (EPA) method 213.2 and SW846 method 7130.

1.2. Cadmium in solution may be readily determined by graphite furnace atomic absorption spectroscopy. The method is applicable to Cd in drinking, surface, and saline waters and in domestic and industrial wastes.

1.3. Drinking water free of particulate matter may be analyzed directly. Ground water, other aqueous samples, TCLP extracts, industrial wastes, soils, sludges, sediments, and other solid wastes require digestion before analysis.

2. Accuracy and Precision

2.1. The determination of cadmium in 15 in-house quality control samples (5.8 μg/L) over an 8-month period had a mean of 5.9 μg/L and a relative standard deviation (RSD) of 1.02%.

3. Collection and Storage of Samples.

3.1. Preserve samples with nitric acid (HNO_3) at a pH <2.0. Complete analysis within 6 months.

4. Interferences

4.1. Contamination is of prime concern during sample preparation. Periodically clean the work area, including the bench top, to eliminate environmental contamination. Use acid-washed sample cups in the autosampler.

4.2. Chemical interferences can be controlled by the addition of a matrix modifier to all samples and standards. Refer to Perkin-Elmer chart 0993-8199 Rev. D (11/89), or to the PE *Methods of Analysis for AAS* for the appropriate matrix modifier.

4.3. Silica from the glassware will grow into the sample solution during and following sample processing. To control this problem, use disposable sterile 50-mL polypropylene centrifuge tubes in the sample digestion steps.

5. Apparatus

5.1. Centrifuge tubes: 50-mL, sterile polypropylene.

5.2. Rainin pipettes with disposable tips.

5.3. Wash bottles: 125-mL, polypropylene, screw tops.

5.4. Hot plate: with aluminum heating block drilled to hold centrifuge tubes.

5.5. Perkin-Elmer 5000 atomic absorption instrument: equipped with a Zeeman graphite furnace or equivalent.

5.6. Required gas for the above instrument is ultrapure argon.

6. Reagents

6.1. Nitric acid (low-temperature redistilled acid, LTRD).

6.2. Hydrochloric acid (low-temperature redistilled acid, LTRD).

6.3. Double-deionized water.

6.4. ASTM Type I water (>10 MΩ/cm resistivity, <0.1 μmho/cm conductivity).

6.5. Appropriate matrix modifier for all samples, standards, and QCs.

6.6. Secondary standards for making the appropriate standard curves.

7. Sample Preparation Procedure

7.1. To determine total recoverable elements in water, waste water, and soil extracts, take a 50-mL aliquot from an acid-preserved sample containing not more than 0.25% (wt/vol) total solids. Place the aliquot in a sterile 50-mL disposable polypropylene centrifuge tube.

7.1.1. Add 500 μL of LTRD HNO_3 and 250 μL of Ultrex or LTRD HCl to each sample.

7.1.2. Heat on a hot plate without boiling (approximately 85°C) until the volume is reduced to 5-10 mL.

7.1.3. Loosely cover the tube with the cap and reflux for 30 min.

7.1.4. Allow the sample to cool, and dilute to 50 mL with ASTM Type I water.

7.1.5. Run one digested blank and one digested spike for each digested batch.

7.1.6. Run a duplicate and a spike for 10-20% of the samples.

7.1.7. For TCLP samples, run a spike for every sample and 20% duplicates.

7.1.8. The analysis should be performed before the EPA regulatory holding times expire.

7.1.9. Add sample and standards to acid-cleaned sample cups.

8. Instrument Procedure

8.1. Instrument power and gases check.

8.1.1. Turn the **POWER** switch to the PE5000 atomic absorption (AA) to **ON**.

8.1.2. Turn **ON** the argon supply valve after checking the pressure at the tank. Pressure must be over 100 psi or the tank must be changed.

8.1.3. Turn the AA switch from **STANDBY** mode to **RUN**.

8.1.4. Make sure the exhaust hood over the graphite furnace is functioning.

8.2. Instrument setup.

8.2.1. Insert the cadmium lamp into the turret oriented toward the ETVAA and plug it in.

8.2.2. Enter **turret lamp number** into keyboard.

8.2.3. Enter recommended **lamp milliamps** (mA) or **watts** depending on lamp type (EDL/HCL).

8.2.3.1. Warm up the EDL and/or HCL lamp for at least 20 min.

8.2.4. Enter **lamp slit width** using **LOW SLIT** key for ETVAA.

8.2.5. Enter **lamp wavelength** using **LAMBDA PEAK** key.

8.2.6. Turn AA switch inside lamp housing to **ICP/ZAA** position.

8.3. Keyboard setup.

8.3.1. Set **SIGNAL** key to **PK AREA** (peak area).

8.3.2. Turn **REC ABS** (record absorbance) signal key **ON**.

8.3.3. Enter **AVG** (average) number (if used).

8.3.4. Enter **CONC MODE** (concentration).

8.4. Furnace setup.

8.4.1. Press **ZAA** key.

8.4.2. Turn **ACCESSORY** knob to **ON** position.

8.4.3. Turn chiller **ON** and check that the water level is above the coils.

8.4.4. Check that the water bottle for distilled water rinse on the autosampler is full.

8.4.5. Turn **ON** the HGA-500 programmer.

8.4.5.1. Enter the temperature program for the element from the ETVAA procedure manual and store the procedure number.

8.5. Computer setup.

8.5.1 Turn PE AA Data System 10 computer **master switch** to **ON**.

8.5.2 Set up ID/WT file.

8.5.3 Turn **print button** on PE5000 keyboard **ON** and store the program.

8.6. Set up autosampler.

8.6.1. Recalibrate the standard curve every 8 to 12 samples.

8.6.2. Enter the number of standards (# stds).

8.6.3. Enter the last sample number (last samp).

8.6.4. Enter the sample volume (samp vol).

8.6.5. Enter the alternate volume (alt vol) for the matrix modifier if used.

8.6.6. Enter the instrument program number (inst prog).

8.6.7. Enter the HGA program number (HGA prog).

8.7. Graphite furnace setup.

8.7.1. Open the furnace and clean or replace the graphite tube. Use the tube with or without the platform depending on the element.

8.7.2. If inserting a new tube, condition it with the manual temperature key.

8.7.3. Using the alignment tool, reinsert the graphite tube and close the furnace.

8.7.4. Using the manual temperature key, set the pyrometer to the atomization temperature of the element and balance the lights (red/green) using the calibration (CAL) knob.

8.7.5. Place the AS40 in **STANDBY** mode and align the autosampler arm. Check the depth of the sample delivery inside the tube and inside the samples. Exit **STANDBY** mode.

8.7.6. Remove and check the furnace lenses. Reinsert the lenses and check the absorbance. If the absorbance reads above 0.100, clean the lenses.

8.7.7. Put samples and standards into the autosampler tray and cover with the dust cover to prevent contamination.

8.7.8. Put the matrix modifier in the holder position, if required.

8.7.9. Check the blank and standards manually.

8.7.10. Calculate the characteristic concentration (cc). If it is within ±20% of chart value (0993-8199 Rev. D 11/89) start the run.

8.7.11. Enter **collect data** mode on PE Data System 10 computer and follow instructions.

8.7.12. After run is complete, press to **DISK** key on PE Data System 10 **twice**.

8.7.13. Select **report** mode on the computer, follow instructions, and print out the final report.

8.7.14. When finished, shut off the chiller, argon gas supply, lamps, EDL power supply, and computer.

8.7.15. Place the autosampler, HGA Programmer, and PE5000 in standby mode.

9. Emergency Shutdown Procedure

9.1. In case of power failure, turn **POWER** switch on PE5000 AA to **OFF**.

9.2. Turn **OFF** the gas valves.

9.3. Follow building power failure procedures.

10. Calculations

10.1. Characteristic concentration (cc).

$$cc = \frac{C \times V \times 0.0044}{A_s},$$

where cc = characteristic concentration for ETVAA,
C = concentration of standard,
V = sample aliquot (μL),
A_s = absorbance of standard, and
0.0044 = 1% absorbance.

11. Proper Waste Disposal Practices

11.1. Solid waste.

11.1.1. Solid waste contaminated with hazardous chemicals above the level of concern is not normally generated. This waste can be placed in the usual trash receptacles in the labs at TA-50.

11.1.2. If a solid waste is generated that may be contaminated at a level of concern, the appropriate paperwork is completed on a case-by-case basis.

11.1.2.1. Complete a Waste Profile Request Form (WPRF) describing the solid waste and send it to the Waste Management group for review.

11.1.2.2. If the Waste Management group determines that the solid waste is contaminated below the level of concern, dispose of the waste as ordinary laboratory trash.

11.1.2.3. If the Waste Management group determines that the solid waste is contaminated above the level of concern, request pickup of the contaminated waste as described in Sec. 11.3.

11.2. Liquid waste.

11.2.1. Accumulate liquid waste containing hazardous contaminants, such as solutions of trace metals above the limits posted for dumping at each lab sink at TA-50, in a coated glass jar in a secondary containment tray and keep it segregated from liquid waste contaminated with listed organics or cyanide greater than 0.5 ppm.

11.2.2. Label the bottle with a hazardous waste label, a corrosive label, a toxic label, and a label indicating its use for trace metal waste. Date the label.

11.2.3. Open the bottle only for the time necessary to add waste.

11.2.4. Keep full bottles in the secondary containment tray pending pickup by the Waste Management group.

11.2.5. Label a new bottle for further use.

11.2.6. Dump liquid inorganic wastes which do not contain any EPA-listed components, or which have toxic metals below the limits posted at lab sinks at TA-50, directly into the lab sink.

11.3. Waste pickup.

11.3.1. Request pickup by the Waste Management group of solid waste or a full bottle of liquid waste containing trace metals using the current Chemical Waste Disposal Request Form (CWDR). The current Waste Profile Request Form (WPRF) that describes the waste is referenced on the CWDR.

11.3.2. The Waste Management group picks up the waste for disposal in accord with Laboratory policy.

12. Source Material

12.1. *Analytical Methods for Atomic Absorption Spectrophotometry*, (Perkin-Elmer, Norwalk, Conn., 1976).

12.2. *Instructions: Zeeman/5000 System*, (Perkin-Elmer, Norwalk, Conn., 1982).

12.3. Methods for Chemical Analysis of Water and Wastes, EPA-600/4-79-020 U.S. Environmental Protection Agency, rev. March 1983).

12.4. Perkin-Elmer chart 0993-8199 Rev. D (11/89).

12.5. "Test Methods for Evaluation of Solid Waste: Laboratory Manual of Physical and Chemical Methods," EPA report no. SW-846 (November 1986).

12.6. "Hazardous and Mixed Waste," Administrative Requirement 10-3, in *Environment, Safety, and Health Manual*, Los Alamos National Laboratory Manual, Chapter 1 (most recent edition).

Revisions or additions to the procedure are marked (▒). Where a section heading is marked the entire section has been revised.

CHROMIUM IN WATER AND SOIL EXTRACTS — GRAPHITE FURNACE AA

Analyte: Chromium	**Method No.:** EI135
Matrix: Water, waste water, and soil extracts	**Detection Limit:** 1.0 μg/L
Procedure: Graphite furnace atomic absorption	**Accuracy and Precision:** 94% ± 0.9% RSD
Effective Date: 09/25/91	**Authors:** Michael G. Bell Barbara J. Hemberger

SAFETY NOTE: Before beginning this procedure, read all of the Material Safety Data Sheets for the chemicals listed in Sec. 6. Read Sec. 4.3 of the EM-9 Safety Manual for information on personal protective clothing and equipment. Read Sec. 11 of this procedure and Source Material 12.6 for proper waste disposal practices.

1. Principle of Method

1.1. This procedure is based on Environmental Protection Agency (EPA) method 218.2 and SW846 method 7190.

1.2. Chromium in solution may be readily determined by graphite furnace atomic absorption spectroscopy. The method is applicable to Cr in drinking, surface, and saline waters and in domestic and industrial wastes.

1.3. Drinking water free of particulate matter may be analyzed directly. Ground water, other aqueous samples, TCLP extracts, industrial wastes, soils, sludges, sediments, and other solid wastes require digestion before analysis.

2. Accuracy and Precision

2.1. The determination of chromium in 23 in-house quality control samples (18.6 μg/L) over an 8-month period had a mean of 17.4 μg/L and a relative standard deviation (RSD) of 0.9%.

3. Collection and Storage of Samples.

3.1. Preserve samples with nitric acid (HNO_3) at a pH <2.0. Complete analysis within 6 months.

4. Interferences

4.1. Contamination is of prime concern during sample preparation. Periodically clean the work area, including the bench top, to eliminate environmental contamination. Use acid-washed sample cups in the autosampler.

4.2. Chemical interferences can be controlled by the addition of a matrix modifier to all samples and standards. Refer to Perkin-Elmer chart 0993-8199 Rev. D (11/89), or to the PE *Methods of Analysis for AAS*, for the appropriate matrix modifier.

4.3. Silica from the glassware will grow into the sample solution during and following sample processing. To control this problem, use disposable sterile 50-mL polypropylene centrifuge tubes in the sample digestion steps.

5. Apparatus

5.1. Centrifuge tubes: 50-mL, sterile prolypropylene.

5.2. Rainin pipettes with disposable tips.

5.3. Wash bottles: 125-mL, polypropylene, screw tops.

5.4. Hot plate: with aluminum heating block drilled to hold centrifuge tubes.

5.5. Perkin-Elmer 5000 atomic absorption instrument: equipped with a Zeeman graphite furnace or equivalent.

5.6. Required gas for the above instrument is ultrapure argon.

6. Reagents

6.1. Nitric acid (low-temperature redistilled acid, LTRD).

6.2. Hydrochloric acid (low-temperature redistilled acid, LTRD).

6.3. Double-deionized water.

6.4. ASTM Type I water (>10 MΩ/cm resistivity, <0.1 μmho/cm conductivity).

6.5. Appropriate matrix modifier for all samples, standards, and QCs.

7. Sample Preparation Procedure

7.1. To determine total recoverable elements in water, waste water, and soil extracts, take a 50-mL aliquot from an acid-preserved sample containing not more than

0.25% (wt/vol) total solids. Place the aliquot in a sterile 50-mL disposable polypropylene centrifuge tube.

7.1.1. Add 500 μL of LTRD HNO_3 and 250 μL of Ultrex or LTRD HCl to each sample.

7.1.2. Heat on a hot plate without boiling (approximately 85°C) until the volume is reduced to 5-10 mL.

7.1.3. Loosely cover the tube with the cap and reflux for 30 min.

7.1.4. Allow the sample to cool, and dilute to 50 mL with ASTM Type I water.

7.1.5. Run one digested blank and one digested spike for each digested batch.

7.1.6. Run a duplicate and a spike for 10-20% of the samples.

7.1.7. For TCLP samples, run a spike for every sample and 20% duplicates.

7.1.8. The analysis should be performed before the EPA regulatory holding times expire.

7.1.9. Add sample and standards to acid-cleaned sample cups.

8. Instrument Procedure

8.1. Instrument power and gases check.

8.1.1. Turn the **POWER** switch to the PE5000 atomic absorption (AA) to **ON**.

8.1.2. Turn **ON** the argon supply valve after checking the pressure at the tank. Pressure must be over 100 psi or the tank must be changed.

8.1.3. Turn the AA switch from **STANDBY** mode to **RUN**.

8.1.4. Make sure the exhaust hood over the graphite furnace is functioning.

8.2. Instrument setup.

8.2.1. Insert the chromium lamp into the turret facing ETVAA and plug it in.

8.2.2. Enter **turret lamp number** into keyboard.

8.2.3. Enter recommended **lamp milliamps** (mA) or **watts** depending on lamp type (EDL/HCL).

8.2.3.1. Warm up the EDL and/or HCL lamp for at least 20 min.

8.2.4. Enter **lamp slit width** using **LOW SLIT** key for ETVAA.

8.2.5. Enter **lamp wavelength** using **LAMBDA PEAK** key.

8.2.6. Turn AA switch inside lamp housing to **ICP/ZAA** position.

8.3. Keyboard setup.

8.3.1. Set **SIGNAL** key to **PK AREA** (peak area).

8.3.2. Turn **REC ABS** (record absorbance) signal key **ON**.

8.3.3. Enter **AVG** (average) number (if used).

8.3.4. Enter **CONC MODE** (concentration).

8.4. Furnace setup.

8.4.1. Press **ZAA** key.

8.4.2. Turn **ACCESSORY** knob to **ON** position.

8.4.3. Turn chiller **ON** and check that the water level is above the coils.

8.4.4. Check that the water bottle for distilled water rinse on the autosampler is full.

8.4.5. Turn **ON** the HGA-500 programmer.

8.4.5.1. Enter the temperature program for the element from the ETVAA procedure manual and store the procedure number.

8.5. Computer setup.

8.5.1. Turn PE AA Data System 10 computer **master switch** to **ON**.

8.5.2. Set up ID/WT file.

8.5.3. Turn **print button** on PE5000 keyboard **ON** and store the program.

8.6. Set up autosampler.

8.6.1. Recalibrate the standard curve every 8 to 12 samples.

8.6.2. Enter the number of standards (# stds).

8.6.3. Enter the last sample number (last samp).

8.6.4. Enter the sample volume (samp vol).

8.6.5. Enter the alternate volume (alt vol) for the matrix modifier if used.

8.6.6. Enter the instrument program number (inst prog).

8.6.7. Enter the HGA program number (HGA prog).

8.7. Graphite furnace setup.

8.7.1. Open the furnace and clean or replace the graphite tube. Use the tube with or without the platform depending on the element.

8.7.2. If inserting a new tube, condition it with the manual temperature key.

8.7.3. Using the alignment tool, reinsert the graphite tube and close the furnace.

8.7.4. Using the manual temperature key, set the pyrometer to the atomization temperature of the element and balance the lights (red/green) using the calibration (CAL) knob.

8.7.5. Place the AS40 in **STANDBY** mode and align the autosampler arm. Check the depth of sample delivery inside tube and inside samples. Exit **STANDBY** mode.

8.7.6. Remove and check the furnace lenses. Reinsert the lenses and check the absorbance. If the absorbance reads above 0.1, clean the lenses.

8.7.7. Put samples and standards into the autosampler tray and cover with the dust cover to prevent contamination.

8.7.8. Put the matrix modifier in the holder position, if required.

8.7.9. Check the blank and standards manually.

8.7.10. Calculate the characteristic concentration (cc). If it is within ±20% of chart value start the run.

8.7.11. Enter **collect data** mode on PE Data System 10 computer and follow instructions.

8.7.12. After run is complete, press to **DISK** on PE Data System 10 **twice**.

8.7.13. Select **report** mode on the computer, follow instructions, and print out the final report.

8.7.14. When finished, shut off the chiller, argon gas supply, lamps, EDL power supply, and computer.

8.7.15. Place the autosampler, HGA Programmer, and PE5000 in standby mode.

9. Emergency Shutdown Procedure

9.1. In case of power failure, turn **POWER** switch on PE5000 AA to **OFF**.

9.2. Turn **OFF** the gas valves.

9.3. Follow building power failure procedures.

10. Calculations

10.1. Characteristic concentration (cc).

$$cc = \frac{C \times V \times 0.0044}{A_s},$$

where cc = characteristic concentration for ETVAA,
C = concentration of standard (μg/L),
V = sample aliquot (μL),
A_s = absorbance of standard, and
0.0044 = 1% absorbance.

11. Proper Waste Disposal Practices

11.1. Solid waste.

11.1.1. Solid waste contaminated with hazardous chemicals above the level of concern is not normally generated. This waste can be placed in the usual trash receptacles in the labs at TA-50.

11.1.2. If a solid waste is generated that may be contaminated at a level of concern, the appropriate paperwork is completed on a case-by-case basis.

11.1.2.1. Complete a Waste Profile Request Form (WPRF) describing the solid waste and send it to the Waste Management group for review.

11.1.2.2. If the Waste Management group determines that the solid waste is contaminated below the level of concern, dispose of the waste as ordinary laboratory trash.

11.1.2.3. If the Waste Management group determines that the solid waste is contaminated above the level of concern, request pickup of the contaminated waste as described in Sec. 11.3.

11.2. Liquid waste.

11.2.1. Accumulate liquid waste containing hazardous contaminants, such as solutions of trace metals above the limits posted for dumping at each lab sink at TA-50, in a coated glass jar in a secondary containment tray and keep it segregated from liquid waste contaminated with listed organics or cyanide greater than 0.5 ppm.

11.2.2. Label the bottle with a hazardous waste label, a corrosive label, a toxic label, and a label indicating its use for trace metal waste. Date the label.

11.2.3. Open the bottle only for the time necessary to add waste.

11.2.4. Keep full bottles in the secondary containment tray pending pickup by the Waste Management group.

11.2.5. Label a new bottle for further use.

11.2.6. Dump liquid inorganic wastes which do not contain any EPA-listed components, or which have toxic metals below the limits posted at lab sinks at TA-50, directly into the lab sink.

11.3. Waste pickup.

11.3.1. Request pickup by the Waste Management group of solid waste or a full bottle of liquid waste containing trace metals using the current Chemical Waste Disposal Request Form (CWDR). The current Waste Profile Request Form (WPRF) that describes the waste is referenced on the CWDR.

11.3.2. The Waste Management group picks up the waste for disposal in accord with Laboratory policy.

12. Source Material

12.1. *Analytical Methods for Atomic Absorption Spectrophotometry*, (Perkin-Elmer, Norwalk, Conn., 1976).

12.2. *Instructions: Zeeman/5000 System*, (Perkin-Elmer, Norwalk, Conn., 1982).

12.3. Methods for Chemical Analysis of Water and Wastes, EPA-600/4-79-020 U.S. Envrionmental Protection Agency, (rev. March 1983).

12.4. Perkin-Elmer chart 0993-8199 Rev. D (11/89).

12.5. "Test Methods for Evaluation of Solid Waste Laboratory Manual of Physical and Chemical Methods," EPA report no. SW-846 (November 1986).

12.6. "Hazardous and Mixed Waste," Administrative Requirement 10-3, in *Environment, Safety, and Health Manual*, Los Alamos National Laboratory Manual, Chapter 1 (most recent edition).

Revisions or additions to the procedure are marked (▒▒▒▒). Where a section heading is marked the entire section has been revised.

LEAD IN WATER AND SOIL EXTRACTS — GRAPHITE FURNACE AA

Analyte: Lead	**Method No.:** EI150
Matrix: Water, waste water, and soil extracts	**Detection Limit:** 2.0 μg/L
Procedure: Graphite furnace atomic absorption	**Accuracy and Precision:** 99.6% ± 1.0% RSD
Effective Date: 09/25/91	**Authors:** Michael G. Bell Barbara J. Hemberger

SAFETY NOTE: Before beginning this procedure, read all of the Material Safety Data Sheets for the chemicals listed in Sec. 6. Read Sec. 4.3 of the EM-9 Safety Manual for information on personal protective clothing and equipment. Read Sec. 11 of this procedure and Source Material 12.6 for proper waste disposal practices.

1. Principle of Method

1.1. This procedure is based on Environmental Protection Agency (EPA) method 239.2 and SW846 method 7421.

1.2. Lead in solution may be readily determined by graphite furnace atomic absorption spectroscopy. The method is applicable to Pb in drinking, surface, and saline waters and in domestic and industrial wastes.

1.3. Drinking water free of particulate matter may be analyzed directly. Ground water, other aqueous samples, TCLP extracts, industrial wastes, soils, sludges, sediments, and other solid wastes require digestion before analysis.

2. Accuracy and Precision

2.1. The determination of lead in 12 in-house quality control samples (72.0 μg/L) over an 8-month period had a mean of 71.7 μg/L and a relative standard deviation (RSD) of 1.0%.

3. Collection and Storage of Samples

3.1. Preserve samples with nitric acid (HNO_3) at a pH <2.0. Complete analysis within 6 months.

4. Interferences

4.1. Contamination is of prime concern during sample preparation. Periodically clean the work area, including the bench top, to eliminate environmental contamination. Use acid-washed sample cups in the autosampler.

4.2. Chemical interferences can be controlled by the addition of a matrix modifier to all samples and standards. Refer to Perkin Elmer chart 0993-8199 Rev. D (11/89), or to the PE *Methods of Analysis for AAS*, for the appropriate matrix modifier.

4.3. Silica from the glassware will grow into the sample solution during and following sample processing. To control this problem, use disposable sterile 50-mL polypropylene centrifuge tubes in the sample digestion steps.

5. Apparatus

5.1. Centrifuge tubes: 50-mL, sterile polypropylene.

5.2. Rainin pipettes with disposable tips.

5.3. Wash bottles: 125-mL, polypropylene, screw tops.

5.4. Hot plate: with aluminum heating block drilled to hold centrifuge tubes.

5.5. Perkin-Elmer 5000 atomic absorption instrument: equipped with a Zeeman graphite furnace or equivalent.

5.6. Required gas for the above instrument is ultrapure argon.

6. Reagents

6.1. Nitric acid (low-temperature redistilled acid, LTRD).

6.2. Hydrochloric acid (low-temperature redistilled acid, LTRD).

6.3. Double-deionized water.

6.4. ASTM Type I water (>10 MΩ/cm resistivity, <0.1 μmho/cm conductivity).

6.5. Appropriate matrix modifier for all samples, standards, and QCs.

6.6. Secondary standards for making the appropriate standard curves.

7. Sample Preparation Procedure

7.1. To determine total recoverable elements in water, waste water, and soil extracts, take a 50-mL aliquot from an acid preserved sample containing not more than 0.25% (wt/vol) total solids. Place the aliquot in a sterile 50-mL disposable polypropylene centrifuge tube.

7.1.1. Add 500 μL of LTRD HNO_3 and 250 μL of Ultrex or LTRD HCl to each sample.

7.1.2. Heat on a hot plate without boiling (approximately 85°C) until the volume is reduced to 5-10 mL.

7.1.3. Loosely cover the tube with the cap and reflux for 30 min.

7.1.4. Allow the sample to cool, and dilute to 50 mL with ASTM Type I water.

7.1.5. Run one digested blank and one digested spike for each digested batch.

7.1.6. Run a duplicate and a spike for 10-20% of the samples.

7.1.7. For TCLP samples, run a spike for every sample and 20% duplicates.

7.1.8. The analysis should be performed before the EPA regulatory holding times expire.

7.1.9. Add sample and standards to acid-cleaned sample cups.

8. Instrument Procedure

8.1. Instrument power and gases check.

8.1.1. Turn the **POWER** switch to the PE5000 atomic absorption (AA) to **ON**.

8.1.2. Turn **ON** the argon supply valve after checking the pressure at the tank. Pressure must be over 100 psi or the tank must be changed.

8.1.3. Turn the AA switch from **STANDBY** mode to **RUN**.

8.1.4. Make sure the exhaust hood over the graphite furnace is functioning.

8.2. Instrument setup.

8.2.1. Insert the lead lamp into the turret oriented toward the ETVAA and plug it in.

8.2.2. Enter **turret lamp number** into keyboard.

8.2.3. Enter recommended **lamp milliamps** (mA) or **watts** depending on lamp type (EDL/HCL).

8.2.3.1. Warm up the EDL and/or HCL lamp for at least 20 min.

8.2.4. Enter **lamp slit width** using **LOW SLIT** key for ETVAA.

8.2.5. Enter **lamp wavelength** using **LAMBDA PEAK** key.

8.2.6. Turn AA switch inside lamp housing to **ICP/ZAA** position.

8.3. Keyboard setup.

8.3.1. Set **SIGNAL** key to **PK AREA** (peak area).

8.3.2. Turn **REC ABS** (record absorbance) signal key **ON**.

8.3.3. Enter **AVG** (average) number (if used).

8.3.4. Enter **CONC MODE** (concentration).

8.4. Furnace setup.

8.4.1. Press **ZAA** key.

8.4.2. Turn **ACCESSORY** knob to **ON** position.

8.4.3. Turn chiller **ON** and check that the water level is above the coils.

8.4.4. Check that the water bottle for distilled water rinse on the autosampler is full.

8.4.5. Turn **ON** the HGA-500 programmer.

8.4.5.1. Enter the temperature program for the element from the ETVAA procedure manual and store the procedure number.

8.5. Computer setup.

8.5.1 Turn PE AA Data System 10 computer **master switch** to **ON**.

8.5.2 Set up ID/WT file.

8.5.3 Turn **print button** on PE5000 keyboard **ON** and store the program.

8.6. Set up autosampler.

8.6.1. Recalibrate the standard curve every 8 to 12 samples.

8.6.2. Enter the number of standards (# stds).

8.6.3. Enter the last sample number (last samp).

8.6.4. Enter the sample volume (samp vol).

8.6.5. Enter the alternate volume (alt vol) for the matrix modifier if used.

8.6.6. Enter the instrument program number (inst prog).

8.6.7. Enter the HGA program number (HGA prog).

8.7. Graphite furnace setup.

8.7.1. Open the furnace and clean or replace the graphite tube. Use the tube with or without the platform depending on the element.

8.7.2. If inserting a new tube, condition it with the manual temperature key.

8.7.3. Using the alignment tool, reinsert the graphite tube and close the furnace.

8.7.4. Using the manual temperature key, set the pyrometer to the atomization temperature of the element and balance the lights (red/green) using the calibration (CAL) knob.

8.7.5. Place the AS40 in **STANDBY** mode and align the autosampler arm. Check the depth of the sample delivery inside the tube and inside the samples. Exit **STANDBY** mode.

8.7.6. Remove and check the furnace lenses. Reinsert the lenses and check the absorbance. If the absorbance reads above 0.100, clean the lenses.

8.7.7. Put samples and standards into the autosampler tray and cover with the dust cover to prevent contamination.

8.7.8. Put the matrix modifier in the holder position, if required.

8.7.9. Check the blank and standards manually.

8.7.10. Calculate the characteristic concentration (cc). If it is within ±20% of chart value (0993-8199 Rev. D 11/89) start the run.

8.7.11. Enter **collect data** mode on PE Data System 10 computer and follow instructions.

8.7.12. After run is complete, press **DISK** key on PE Data System 10 **twice**.

8.7.13. Select **report** mode on the computer, follow instructions, and print out the final report.

8.7.14. When finished, shut off the chiller, argon gas supply, lamps, EDL power supply, and computer.

8.7.15. Place the autosampler, HGA Programmer, and PE5000 in standby mode.

9. Emergency Shutdown Procedure

9.1. In case of power failure, turn **POWER** switch on PE5000 AA to **OFF**.

9.2. Turn **OFF** the gas valves.

9.3. Follow building power failure procedures.

10. Calculations

10.1. Characteristic concentration (cc).

$$cc = \frac{C \times V \times 0.0044}{A_s},$$

where cc = characteristic concentration for ETVAA,
C = concentration of standard (μg/L),
V = sample aliquot (μL),
A_s = absorbance of standard, and
0.0044 = 1% absorbance.

11. Proper Waste Disposal Practices

11.1. Solid waste.

11.1.1. Solid waste contaminated with hazardous chemicals above the level of concern is not normally generated. This waste can be placed in the usual trash receptacles in the labs at TA-50.

11.1.2. If a solid waste is generated that may be contaminated at a level of concern, the appropriate paperwork is completed on a case-by-case basis.

11.1.2.1. Complete a Waste Profile Request Form (WPRF) describing the solid waste and send it to the Waste Management group for review.

11.1.2.2. If the Waste Management group determines that the solid waste is contaminated below the level of concern, dispose of the waste as ordinary laboratory trash.

11.1.2.3. If the Waste Management group determines that the solid waste is contaminated above the level of concern, request pickup of the contaminated waste as described in Sec. 11.3.

11.2. Liquid waste.

11.2.1. Accumulate liquid waste containing hazardous contaminants, such as solutions of trace metals above the limits posted for dumping at each lab sink at TA-50, in a coated glass jar in a secondary containment tray and keep it segregated from liquid waste contaminated with listed organics or cyanide greater than 0.5 ppm.

11.2.2. Label the bottle with a hazardous waste label, a corrosive label, a toxic label, and a label indicating its use for trace metal waste. Date the label.

11.2.3. Open the bottle only for the time necessary to add waste.

11.2.4. Keep full bottles in the secondary containment tray pending pickup by the Waste Management group.

11.2.5. Label a new bottle for further use.

11.2.6. Dump liquid inorganic wastes which do not contain any EPA-listed components, or which have toxic metals below the limits posted at lab sinks at TA-50, directly into the lab sink.

11.3. Waste pickup.

11.3.1. Request pickup by the Waste Management group of solid waste or a full bottle of liquid waste containing trace metals using the current Chemical Waste Disposal Request Form (CWDR). The current Waste Profile Request Form (WPRF) that describes the waste is referenced on the CWDR.

11.3.2. The Waste Management group picks up the waste for disposal in accord with Laboratory policy.

12. Source Material

12.1. *Analytical Methods for Atomic Absorption Spectrophotometry*, (Perkin-Elmer, Norwalk, Conn., 1976).

12.2. *Instructions: Zeeman/5000 System*, (Perkin-Elmer, Norwalk, Conn., 1982).

12.3. Methods for Chemical Analysis of Water and Wastes, EPA-600/4-79-020 U.S. Environmental Protection Agency, (rev. March 1983).

12.4. Perkin-Elmer chart 0993-8199 Rev. D (11/89).

12.5. "Test Methods for Evaluation of Solid Waste: Laboratory Manual of Physical and Chemical Methods," EPA report no. SW-846 (November 1986).

12.6. "Hazardous and Mixed Waste," Administrative Requirement 10-3, in *Environment, Safety, and Health Manual*, Los Alamos National Laboratory Manual, Chapter 1 (most recent edition).

Revisions or additions to the procedure are marked (▒). Where a section heading is marked the entire section has been revised.

SELENIUM IN WATER AND SOIL EXTRACTS — GRAPHITE FURNACE AA

Analtye: Selenium	**Method No.:** EI185
Matrix: Water, waste water, and soil extracts	**Detection Limit:** 2.0 μg/L
Procedure: Graphite furnace atomic absorption	**Accuracy and Precision:** 96% ± 1.04% RSD
Effective Date: 09/25/91	**Authors:** Michael G. Bell Barbara J. Hemberger

SAFETY NOTE: Before beginning this procedure, read all of the Material Safety Data Sheets for the chemicals listed in Sec. 6. Read Sec. 4.3 of the EM-9 Safety Manual for information on personal protective clothing and equipment. Read Sec. 11 of this procedure and Source Material 12.6 for proper waste disposal practices.

1. Principle of Method

1.1. This procedure is based on Environmental Protection Agency (EPA) method 270.2 and SW846 method 7740.

1.1. Selenium in solution may be readily determined by graphite furnace atomic absorption spectroscopy. The method is applicable to Se in drinking, surface, and saline waters and in domestic and industrial wastes.

1.3. Drinking water free of particulate matter may be analyzed directly. Ground water, other aqueous samples, TCLP extracts, industrial wastes, soils, sludges, sediments, and other solid wastes require digestion before analysis.

2. Accuracy and Precision

2.1. The determination of selenium in 18 in-house quality control samples (9.7 μg/L) over an 8-month period had a mean of 10.1 μg/L and a relative standard deviation (RSD) of 1.04%.

3. Collection and Storage of Samples.

3.1. Preserve samples with nitric acid (HNO_3) at a pH <2.0. Complete analysis within 6 months.

4. Interferences

4.1. Contamination is of prime concern during sample preparation. Periodically clean the work area, including the bench top, to eliminate environmental contamination. Use acid-washed sample cups in the autosampler.

4.2. Chemical interferences can be controlled by the addition of a matrix modifier to all samples and standards. Refer to Perkin-Elmer chart 0993-8199 Rev. D (11/89), or to the PE *Methods of Analysis for AAS*, for the appropriate matrix modifier.

4.3. Silica from the glassware will grow into the sample solution during and following sample processing. To control this problem, use disposable sterile 50-mL polypropylene centrifuge tubes in the sample digestion steps.

5. Apparatus

5.1. Centrifuge tubes: 50-mL, sterile polypropylene.

5.2. Rainin pipettes with disposable tips.

5.3. Wash bottles: 125-mL, polypropylene, screw tops.

5.4. Hot plate: with aluminum heating block drilled to hold centrifuge tubes.

5.5. Perkin-Elmer 5000 atomic absorption instrument: equipped with a Zeeman graphite furnace or equivalent.

5.6. Required gas for the above instrument is ultrapure argon.

6. Reagents

6.1. Nitric acid (low-temperature redistilled acid, LTRD).

6.2. Hydrochloric acid (low-temperature redistilled acid, LTRD).

6.3. Double-deionized water.

6.4. ASTM Type I water (>10 MΩ/cm resistivity, >0.1 μmho/cm conductivity).

6.5. Appropriate matrix modifier for all samples, standards, and QCs.

6.6. Secondary standards for making the appropriate standard curves.

7. Sample Preparation Procedure

7.1. To determine total recoverable elements in water, waste water, and soil extracts, take a 50-mL aliquot from an acid preserved sample containing not more than 0.25% (wt/vol) total solids. Place the aliquot in a sterile 50-mL disposable polypropylene centrifuge tube.

7.1.1. Add 500 μL of LTRD HNO_3 and 250 μL of Ultrex or LTRD HCl to each sample.

7.1.2. Heat on a hot plate without boiling (approximately 85°C) until the volume is reduced to 5-10 mL.

7.1.3. Loosely cover the tube with the cap and reflux for 30 min.

7.1.4. Allow the sample to cool, and dilute to 50 mL with ASTM Type I water.

7.1.5. Run one digested blank and one digested spike for each digested batch.

7.1.6. Run a duplicate and a spike for 10-20% of the samples.

7.1.7. For TCLP samples, run a spike for every sample and 20% duplicates.

7.1.8. The analysis should be performed before the EPA regulatory holding times expire.

7.1.9. Add sample and standards to acid-cleaned sample cups.

8. Instrument Procedure

8.1. Instrument power and gases check.

8.1.1. Turn the **POWER** switch to the PE5000 atomic absorption (AA) to **ON**.

8.1.2. Turn **ON** the argon supply valve after checking the pressure at the tank. Pressure must be over 100 psi or the tank must be changed.

8.1.3. Turn the AA switch from **STANDBY** mode to **RUN**.

8.1.4. Make sure the exhaust hood over the graphite furnace is functioning.

8.2. Instrument setup.

8.2.1. Insert the selenium lamp into the turret oriented toward the ETVAA and plug it in.

8.2.2. Enter **turret lamp number** into keyboard.

8.2.3. Enter recommended **lamp milliamps** (mA) or **watts** depending on lamp type (EDL/HCL).

8.2.3.1. Warm up the EDL and/or HCL lamp for a minimum of 20 min.

8.2.4. Enter **lamp slit width** using **LOW SLIT** key for ETVAA.

8.2.5. Enter **lamp wavelength** using **LAMBDA PEAK** key.

8.2.6. Turn AA switch inside lamp housing to **ICP/ZAA** position.

8.3. Keyboard setup.

8.3.1. Set **SIGNAL** key to **PK AREA** (peak area).

8.3.2. Turn **REC ABS** (record absorbance) signal key **ON**.

8.3.3. Enter **AVG** (average) number (if used).

8.3.4. Enter **CONC MODE** (concentration).

8.4. Furnace setup.

8.4.1. Press **ZAA** key.

8.4.2. Turn **ACCESSORY** knob to **ON** position.

8.4.3. Turn chiller **ON** and check that the water level is above the coils.

8.4.4. Check that the water bottle for distilled water rinse on the autosampler is full.

8.4.5. Turn **ON** the HGA-500 programmer.

8.4.5.1. Enter the temperature program for the element from the ETVAA procedure manual and store the procedure number.

8.5. Computer setup.

8.5.1. Turn PE AA Data System 10 computer **master switch** to **ON**.

8.5.2. Set up ID/WT file.

8.5.3. Turn **print button** on PE5000 keyboard **ON** and store the program.

8.6. Set up autosampler.

8.6.1. Recalibrate the standard curve every 8 to 12 samples.

8.6.2. Enter the number of standards (# stds).

8.6.3. Enter the last sample number (last samp).

8.6.4. Enter the sample volume (samp vol).

8.6.5. Enter the alternate volume (alt vol) for the matrix modifier if used.

8.6.6. Enter the instrument program number (inst prog).

8.6.7. Enter the HGA program number (HGA prog).

8.7. Graphite furnace setup.

8.7.1. Open the furnace and clean or replace the graphite tube. Use the tube with or without the platform depending on the element.

8.7.2. If inserting a new tube, condition it with the manual temperature key.

8.7.3. Using the alignment tool, reinsert the graphite tube and close the furnace.

8.7.4. Using the manual temperature key, set the pyrometer to the atomization temperature of the element and balance the lights (red/green) using the calibration (CAL) knob.

8.7.5. Place the AS40 in **STANDBY** mode and align the autosampler arm. Check the depth of the sample delivery inside the tube and inside the samples. Exit **STANDBY** mode.

8.7.6. Remove and check the furnace lenses. Reinsert the lenses and check the absorbance. If the absorbance reads above 0.100, clean the lenses.

8.7.7. Put samples and standards into the autosampler tray and cover with the dust cover to prevent contamination.

8.7.8. Put the matrix modifier in the holder position, if required.

8.7.9. Check the blank and standards manually.

8.7.10. Calculate the characteristic concentration (cc). If it is within ±20% of chart value (0993-8199 Rev. D 11/89) start the run.

8.7.11. Enter **collect data** mode on PE Data System 10 computer and follow instructions.

8.7.12. After run is complete, press to **DISK** key on PE Data System 10 **twice**.

8.7.13. Select **report** mode on the computer, follow instructions, and print the out final report.

8.7.14. When finished, shut off the chiller, argon gas supply, lamps, EDL power supply, and computer.

8.7.15 Place the autosampler, HGA Programmer,and PE5000 in standby mode.

9. Emergency Shutdown Procedure

9.1. In case of power failure, turn **POWER** switch on PE5000 AA to **OFF**.

9.2. Turn **OFF** the gas valves.

9.3. Follow building power failure procedures.

10. Calculations

10.1. Characteristic concentration (cc).

$$cc = \frac{C \times V \times 0.0044}{A_s},$$

where cc = characteristic concentration for ETVAA,
C = concentration of standard (μg/L),
V = sample aliquot (μL),
A_s = absorbance of standard, and
0.0044 = 1% absorbance.

11. Proper Waste Disposal Practices

11.1. Solid waste.

11.1.1. Solid waste contaminated with hazardous chemicals above the level of concern is not normally generated. This waste can be placed in the usual trash receptacles in the labs at TA-50.

11.1.2. If a solid waste is generated that may be contaminated at a level of concern, the appropriate paperwork is completed on a case-by-case basis.

11.1.2.1. Complete a Waste Profile Request Form (WPRF) describing the solid waste and send it to the Waste Management group for review.

11.1.2.2. If the Waste Management group determines that the solid waste is contaminated below the level of concern, dispose of the waste as ordinary laboratory trash.

11.1.2.3. If the Waste Management group determines that the solid waste is contaminated above the level of concern, request pickup of the contaminated waste as described in Sec. 11.3.

11.2. Liquid waste.

11.2.1. Accumulate liquid waste containing hazardous contaminants, such as solutions of trace metals above the limits posted for dumping at each lab sink at TA-50, in a coated glass jar in a secondary containment tray and keep it segregated from liquid waste contaminated with listed organics or cyanide greater than 0.5 ppm.

11.2.2. Label the bottle with a hazardous waste label, a corrosive label, a toxic label, and a label indicating its use for trace metal waste. Date the label.

11.2.3. Open the bottle only for the time necessary to add waste.

11.2.4. Keep full bottles in the secondary containment tray pending pickup by the Waste Management group.

11.2.5. Label a new bottle for further use.

11.2.6. Dump liquid inorganic wastes which do not contain any EPA-listed components, or which have toxic metals below the limits posted at lab sinks at TA-50, directly into the lab sink.

11.3. Waste pickup.

11.3.1. Request pickup by the Waste Management group of solid waste or a full bottle of liquid waste containing trace metals using the current Chemical Waste Disposal Request Form (CWDR). The current Waste Profile Request Form (WPRF) that describes the waste is referenced on the CWDR.

11.3.2. The Waste Management group picks up the waste for disposal in accord with Laboratory policy.

12. Source Material

12.1. *Analytical Methods for Atomic Absorption Spectrophotometry*, (Perkin-Elmer, Norwalk, Conn., 1976).

12.2. *Instructions: Zeeman/5000 System*, (Perkin-Elmer, Norwalk, Conn., 1982).

12.3. Methods for Chemical Analysis of Water and Wastes, EPA-600/4-79-020 U.S. Environmental Protection Agency, (rev. March 1983).

12.4. Perkin-Elmer chart 0993-8199 Rev. D (11/89).

12.5. "Test Methods for Evaluation of Solid Waste: Laboratory Manual of Physical and Chemical Methods," EPA report no. SW-846 (November 1986).

12.6. "Hazardous and Mixed Waste," Administrative Requirement 10-3, in *Environment, Safety, and Health Manual*, Los Alamos National Laboratory Manual, Chapter 1 (most recent edition).

Revisions or additions to the procedure are marked (▒). Where a section heading is marked the entire section has been revised.

THALLIUM ON FILTERS — GRAPHITE FURNACE AA

Analyte: Thallium	**Method No.:** EI200
Matrix: Filters	**Detection Limit:** 5.0 μg/L
Procedure: Graphite furnace atomic absorption	**Accuracy and Precision:** 100% ± 1.0% RSD
Effective Date: 09/30/91	**Authors:** Michael G. Bell Barbara J. Hemberger

SAFETY NOTE: Before beginning this procedure, read all of the Material Safety Data Sheets for the chemicals listed in Sec. 6. Read Sec. 4.3 of the EM-9 Safety Manual for information on personal protective clothing and equipment. Read Sec. 11 of this procedure and Source Material 12.5 for proper waste disposal practices.

1. Principle of Method

1.1. Thallium in solution may be readily determined by graphite furnace atomic absorption spectroscopy. The method is applicable to Tl on filters. Samples are acid-leached or prepared by total digestion with concentrated nitric acid.

2. Accuracy and Precision

2.1. The determination of thallium in 6 in-house quality control samples (84.6 μg/L) over an 8-month period had a mean of 84.3 μg/L and a relative standard deviation (RSD) of 1.0%.

3. Collection and Storage of Samples.

3.1. There are no special requirements for filters sealed in their containers.

4. Interferences

4.1. Contamination is of prime concern during sample preparation. Periodically clean the work area, including the bench top, to eliminate environmental contamination. Use acid-washed sample cups in the autosampler.

4.2. Chemical interferences can be controlled by the addition of a matrix modifier to all samples and standards. Refer to Perkin-Elmer chart 0993-8199 Rev. D (11/89), or to the PE *Methods of Analysis for AAS*, for the appropriate matrix modifier.

4.3. Silica from the glassware will grow into the sample solution during and following sample processing. To control this problem, use sterile disposable 50-mL polypropylene centrifuge tubes or 15-mL polypropylene tubes in the sample digestion steps.

5. Apparatus

5.1. Polypropylene tubes: 15- and 50-mL, sterile polypropylene, with caps.

5.2. Rainin pipettes with disposable tips.

5.3. Wash bottles: 125-mL, polypropylene, screw tops.

5.4. An automatic sample shaker.

5.5. Perkin-Elmer 5000 atomic absorption instrument: equipped with a Zeeman Graphite Furnace or equivalent.

5.6. Required gas for the above instrument is ultrapure argon.

5.7. Hot plate with aluminum heating block drilled to hold centrifuge tubes.

6. Reagents

6.1. Nitric acid (low-temperature redistilled acid, LTRD).

6.2. Double-deionized water.

6.3. ASTM Type I water (>10 MΩ/cm resistivity, <0.1 μmho/cm conductivity).

6.4. Appropriate matrix modifier for all samples, standards, and QCs.

6.5. Secondary standards for making the appropriate standard curves.

7. Sample Preparation Procedure

7.1. Place filters in 15-mL polypropylene tubes and add 10 mL of 1% nitric acid, LTRD or Ultrex grade, and put caps on securely.

7.1.1. Samples should include a blind QC, customer blank filter, and an extraction blank.

7.1.2. Put samples on the shaker for a minimum of 4 h for extraction.

7.1.3. Add the sample and standards to acid-cleaned sample cups.

7.1.4. For total digestion, place the sample filter in a 50-mL centrifuge tube and add 10 mL of concentrated nitric acid. Heat in an aluminum block to near dryness.

8. Instrument Procedure

8.1. Instrument power and gases check.

8.1.1. Turn the **POWER** switch to the PE5000 atomic absorption (AA) to **ON**.

8.1.2. Turn **ON** the argon supply valve after checking the pressure at the tank. Pressure must be over 100 psi or the tank must be changed.

8.1.3. Turn the AA switch from **STANDBY** mode to **RUN**.

8.1.4. Make sure the exhaust hood over the graphite furnace is functioning.

8.2. Instrument setup.

8.2.1. Insert the thallium lamp into the turret oriented toward the ETVAA and plug it in.

8.2.2. Enter **turret lamp number** into keyboard.

8.2.3. Enter recommended **lamp milliamps** (mA) or **watts** depending on lamp type (EDL/HCL).

8.2.3.1. Warm up the EDL and/or HCL lamp for a minimum of 20 min.

8.2.4. Enter **lamp slit width** using **LOW SLIT** key for ETVAA.

8.2.5. Enter **lamp wavelength** using **LAMBDA PEAK** key.

8.2.6. Turn AA switch inside lamp housing to **ICP/ZAA** position.

8.3. Keyboard setup.

8.3.1. Set **SIGNAL** key to **PK AREA** (peak area).

8.3.2. Turn **REC ABS** (record absorbance) signal key **ON**.

8.3.3. Enter **AVG** (average) number (if used).

8.3.4. Enter **CONC MODE** (concentration).

8.4. Furnace setup.

8.4.1. Press **ZAA** key.

8.4.2. Turn **ACCESSORY** knob to **ON** position.

8.4.3. Turn chiller **ON** and check that the water level is above the coils.

8.4.4. Check that the water bottle for distilled water rinse on the autosampler is full.

8.4.5. Turn **ON** the HGA-500 programmer.

8.4.5.1. Enter the temperature program for the element from the ETVAA procedure manual and store the procedure number.

8.5. Computer setup.

8.5.1. Turn PE AA Data System 10 computer **master switch** to **ON**.

8.5.2. Setup ID/WT file.

8.5.3. Turn **print button** on PE5000 keyboard **ON** and store the program.

8.6. Set up autosampler.

8.6.1. Recalibrate the standard curve every 8 to 12 samples.

8.6.2. Enter the number of standards (# stds).

8.6.3. Enter the last sample number (last samp).

8.6.4. Enter the sample volume (samp vol).

8.6.5. Enter the alternate volume (alt vol) for the matrix modifier if used.

8.6.6. Enter the instrument program number (inst prog).

8.6.7. Enter the HGA program number (HGA prog).

8.7. Graphite furnace setup.

8.7.1. Open the furnace and clean or replace the graphite tube. Use the tube with or without the platform depending on the element.

8.7.2. If inserting a new tube, condition it with the manual temperature key.

8.7.3. Using the alignment tool, reinsert the graphite tube and close the furnace.

8.7.4. Using the manual temperature key, set the pyrometer to the atomization temperature of the element and balance the lights (red/green) using the calibration (CAL) knob.

8.7.5. Place the AS40 in **STANDBY** mode and align the autosampler arm. Check the depth of the sample delivery inside the tube and inside the samples. Exit **STANDBY** mode.

8.7.6. Remove and check the furnace lenses. Reinsert the lenses and check the absorbance. If the absorbance reads above 0.100, clean the lenses.

8.7.7. Put samples and standards into the autosampler tray and cover with the dust cover to prevent contamination.

8.7.8. Put the matrix modifier in the holder position, if required.

8.7.9. Check the blank and standards manually.

8.7.10. Calculate the characteristic concentration (cc). If it is within ±20% of chart value (0993-8199 Rev. D 11/89) start the run.

8.7.11. Enter **collect data** mode on PE Data System 10 computer and follow instructions.

8.7.12. After run is complete, press to **DISK** key on PE Data System 10 **twice**.

8.7.13. Select **report** mode on the computer, follow instructions, and print out the final report.

8.7.14. When finished, shut off the chiller, argon gas supply, lamps, EDL power supply, and computer.

8.7.15. Place the autosampler, HGA Programmer, and PE5000 in standby mode.

9. Emergency Shutdown Procedure

9.1. In case of power failure, turn **POWER** switch on PE5000 AA to **OFF**.

9.2. Turn **OFF** the gas valves.

9.3. Follow building power failure procedures.

10. Calculations

10.1. Characteristic concentration (cc).

$$cc = \frac{C \times V \times 0.0044}{A_s},$$

where cc = characteristic concentration for ETVAA,
C = concentration of standard (μg/L),
V = sample aliquot (μL),
A_s = absorbance of standard, and
0.0044 = 1% absorbance.

11. Proper Waste Disposal Practices

11.1. Solid waste.

11.1.1. Solid waste contaminated with hazardous chemicals above the level of concern is not normally generated. This waste can be placed in the usual trash receptacles in the labs at TA-50.

11.1.2. If a solid waste is generated that may be contaminated at a level of concern, the appropriate paperwork is completed on a case-by-case basis.

11.1.2.1. Complete a Waste Profile Request Form (WPRF) describing the solid waste and send it to the Waste Management group for review.

11.1.2.2. If the Waste Management group determines that the solid waste is contaminated below the level of concern, dispose of the waste as ordinary laboratory trash.

11.1.2.3. If the Waste Management group determines that the solid waste is contaminated above the level of concern, request pickup of the contaminated waste as described in Sec. 11.3.

11.2. Liquid waste.

11.2.1. Accumulate liquid waste containing hazardous contaminants, such as solutions of trace metals above the limits posted for dumping at each lab sink at TA-50, in a coated glass jar in a secondary containment tray and keep it segregated from liquid waste contaminated with listed organics or cyanide greater than 0.5 ppm.

11.2.2. Label the bottle with a hazardous waste label, a corrosive label, a toxic label, and a label indicating its use for trace metal waste. Date the label.

11.2.3. Open the bottle only for the time necessary to add waste.

11.2.4. Keep full bottles in the secondary containment tray pending pickup by the Waste Management group.

11.2.5. Label a new bottle for further use.

11.2.6. Dump liquid inorganic wastes which do not contain any EPA-listed components, or which have toxic metals below the limits posted at lab sinks at TA-50, directly into the lab sink.

11.3. Waste pickup.

11.3.1. Request pickup by the Waste Management group of solid waste or a full bottle of liquid waste containing trace metals using the current Chemical Waste Disposal Request Form (CWDR). The current Waste Profile Request Form (WPRF) that describes the waste is referenced on the CWDR.

11.3.2. The Waste Management group picks up the waste for disposal in accord with Laboratory policy.

12. Source Material

12.1. *Analytical Methods for Atomic Absorption Spectrophotometry*, (Perkin-Elmer, Norwalk, Conn., 1976).

12.2. *Instructions: Zeeman/5000 System*, (Perkin-Elmer, Norwalk, Conn., 1982).

12.3. Methods for Chemical Analysis of Water and Wastes, EPA-600/4-79-020 U.S. Environmental Protection Agency (rev. March 1983).

12.4. Perkin-Elmer chart 0993-8199 Rev. D (11/89).

12.5. "Hazardous and Mixed Waste," Administrative Requirement 10-3, in *Environment, Safety, and Health Manual*, Los Alamos National Laboratory Manual, Chapter 1 (most recent edition).

Revisions or additions to the procedure are marked (▒). Where a section heading is marked the entire section has been revised.

THALLIUM IN WATER AND SOIL EXTRACTS — GRAPHITE FURNACE AA

Analyte: Thallium	**Method No.:** EI205
Matrix: Water, waste water, and soil extracts	**Detection Limit:** 5.0 μg/L
Procedure: Graphite furnace atomic absorption	**Accuracy and Precision:** 100% ± 1.0% RSD
Effective Date: 09/30/91	**Authors:** Michael G. Bell Barbara J. Hemberger

SAFETY NOTE: Before beginning this procedure, read all of the Material Safety Data Sheets for the chemicals listed in Sec. 6. Read Sec. 4.3 of the EM-9 Safety Manual for information on personal protective clothing and equipment. Read Sec. 11 of this procedure and Source Material 12.6 for proper waste disposal practices.

1. Principle of Method

1.1. This procedure is based on Environmental Protection Agency (EPA) method 279.2 and SW846 method 7841.

1.2. Thallium in solution may be readily determined by graphite furnace atomic absorption spectroscopy. The method is applicable to Tl in drinking, surface, and saline waters and in domestic and industrial wastes.

1.3. Drinking water free of particulate matter may be analyzed directly. Ground water, other aqueous samples, TCLP extracts, industrial wastes, soils, sludges, sediments, and other solid wastes require digestion before analysis.

2. Accuracy and Precision

2.1. The determination of thallium in 6 in-house quality control samples (84.6 μg/L) over an 8-month period had a mean of 84.3 μg/L and a relative standard deviation (RSD) of 1.0%.

3. Collection and Storage of Samples.

3.1. Preserve samples with nitric acid (HNO_3) at a pH <2.0. Complete analysis within 6 months.

4. Interferences

4.1. Contamination is of prime concern during sample preparation. Periodically clean the work area, including the bench top, to eliminate environmental contamination. Use acid-washed sample cups in the autosampler.

4.2. Chemical interferences can be controlled by the addition of a matrix modifier to all samples and standards. Refer to Perkin-Elmer chart 0993-8199 Rev. D (11/89), or to the PE *Methods of Analysis for AAS*, for the appropriate matrix modifier.

4.3. Silica from the glassware will grow into the sample solution during and following sample processing. To control this problem, use sterile disposable 50-mL polypropylene centrifuge tubes in the sample digestion steps.

5. Apparatus

5.1. Centrifuge tubes: 50-mL, sterile polypropylene.

5.2. Rainin pipettes with disposable tips.

5.3. Wash bottles: 125-mL, polypropylene, screw tops.

5.4. Hot plate: with aluminum heating block drilled to hold centrifuge tubes.

5.5. Perkin-Elmer 5000 atomic absorption instrument: equipped with a Zeeman graphite furnace or equivalent.

5.6. Required gas for the above instrument is ultrapure argon.

6. Reagents

6.1. Nitric acid (low-temperature redistilled acid, LTRD).

6.2. Hydrochloric acid (low-temperature redistilled acid, LTRD).

6.3. Double-deionized water.

6.4. ASTM Type I water (>10 MΩ/cm resistivity, <0.1 μhmo/cm conductivity).

6.5. Appropriate matrix modifier for all samples, standards, and QCs.

6.6. Secondary standards for making the appropriate standard curves.

7. Sample Preparation Procedure

7.1. To determine total recoverable elements in water, waste water, and soil extracts, take a 50-mL aliquot from an acid-preserved sample containing not more than 0.25% (wt/vol) total solids. Place the aliquot in a 50-mL disposable sterile polypropylene centrifuge tube.

7.1.1. Add 500 μL of LTRD HNO_3 and 250 μL of Ultrex or LTRD HCl to each sample.

7.1.2. Heat on a hot plate without boiling (approximately 85°C) until the volume is reduced to 5-10 mL.

7.1.3. Loosely cover the tube with the cap and reflux for 30 min.

7.1.4. Allow the sample to cool, and dilute to 50 mL with ASTM Type I water.

7.1.5. Run one digested blank and one digested spike for each digested batch.

7.1.6. Run a duplicate and a spike for 10-20% of the samples.

7.1.7. For TCLP samples, run a spike for every sample and 20% duplicates.

7.1.8. The analysis should be performed before the EPA regulatory holding times expire.

7.1.9. Add sample and standards to acid-cleaned sample cups.

8. Instrument Procedure

8.1. Instrument power and gases check.

8.1.1. Turn the **POWER** switch to the PE5000 atomic absorption (AA) to **ON**.

8.1.2. Turn **ON** the argon supply valve after checking the pressure at the tank. Pressure must be over 100 psi or the tank must be changed.

8.1.3. Turn the AA switch from **STANDBY** mode to **RUN**.

8.1.4. Make sure the exhaust hood over the graphite furnace is functioning.

8.2. Instrument setup.

8.2.1. Insert the thallium lamp into the turret oriented toward the ETVAA and plug it in.

8.2.2. Enter **turret lamp number** into keyboard.

8.2.3. Enter recommended **lamp milliamps** (mA) or **watts** depending on lamp type (EDL/HCL).

8.2.3.1. Warm up the EDL and/or HCL lamp for a minimum of 20 min.

8.2.4. Enter **lamp slit width** using **LOW SLIT** key for ETVAA.

8.2.5. Enter **lamp wavelength** using **LAMBDA PEAK** key.

8.2.6. Turn AA switch inside lamp housing to **ICP/ZAA** position.

8.3. Keyboard setup.

8.3.1. Set **SIGNAL** key to **PK AREA** (peak area).

8.3.2. Turn **REC ABS** (record absorbance) signal key **ON**.

8.3.3. Enter **AVG** (average) number (if used).

8.3.4. Enter **CONC MODE** (concentration).

8.4. Furnace setup.

8.4.1. Press **ZAA** key.

8.4.2. Turn **ACCESSORY** knob to **ON** position.

8.4.3. Turn chiller **ON** and check that the water level is above the coils.

8.4.4. Check that the water bottle for distilled water rinse on the autosampler is full.

8.4.5. Turn **ON** the HGA-500 programmer.

8.4.5.1. Enter the temperature program for the element from the ETVAA procedure manual and store the procedure number.

8.5. Computer setup.

8.5.1. Turn PE AA Data System 10 computer **master switch** to **ON**.

8.5.2. Set up ID/WT file.

8.5.3. Turn **print button** on PE5000 keyboard **ON** and store the program.

8.6. Set up autosampler.

8.6.1. Recalibrate the standard curve every 8 to 12 samples.

8.6.2. Enter the number of standards (# stds).

8.6.3. Enter the last sample number (last samp).

8.6.4. Enter the sample volume (samp vol).

8.6.5. Enter the alternate volume (alt vol) for the matrix modifier if used.

8.6.6. Enter the instrument program number (inst prog).

8.6.7. Enter the HGA program number (HGA prog).

8.7. Graphite furnace setup.

8.7.1. Open the furnace and clean or replace the graphite tube. Use the tube with or without the platform depending on the element.

8.7.2. If inserting a new tube, condition it with the manual temperature key.

8.7.3. Using the alignment tool, reinsert the graphite tube and close the furnace.

8.7.4. Using the manual temperature key, set the pyrometer to the atomization temperature of the element and balance the lights (red/green) using the calibration (CAL) knob.

8.7.5. Place the AS40 in **STANDBY** mode and align the autosampler arm. Check the depth of the sample delivery inside the tube and inside the samples. Exit **STANDBY** mode.

8.7.6. Remove and check the furnace lenses. Reinsert the lenses and check the absorbance. If the absorbance reads above 0.100, clean the lenses.

8.7.7. Put samples and standards into the autosampler tray and cover with the dust cover to prevent contamination.

8.7.8. Put the matrix modifier in the holder position, if required.

8.7.9. Check the blank and standards manually.

8.7.10. Calculate the characteristic concentration (cc). If it is within ±20% of chart value (0993-8199 Rev. D 11/89) start the run.

8.7.11. Enter **collect data** mode on PE Data System 10 computer and follow instructions.

8.7.12. After run is complete, press to **DISK** key on PE Data System 10 **twice**.

8.7.13. Select **report** mode on the computer, follow instructions, and print out the final report.

8.7.14. When finished, shut off chiller, argon gas supply, lamps, EDL power supply, and computer.

8.7.15. Place the autosampler, HGA Programmer, and PE5000 in standby mode.

9. Emergency Shutdown Procedure

9.1. In case of power failure, turn **POWER** switch on PE5000 AA to **OFF**.

9.2. Turn **OFF** the gas valves.

9.3. Follow building power failure procedures.

10. Calculations

10.1. Characteristic concentration (cc).

$$cc = \frac{C \times V \times 0.0044}{A_s},$$

where cc = characteristic concentration for ETVAA,
C = concentration of standard (μg/L),
V = sample aliquot (μL),
A_s = absorbance of standard, and
0.0044 = 1% absorbance.

11. Proper Waste Disposal Practices

11.1. Solid waste.

11.1.1. Solid waste contaminated with hazardous chemicals above the level of concern is not normally generated. This waste can be placed in the usual trash receptacles in the labs at TA-50.

11.1.2. If a solid waste is generated that may be contaminated at a level of concern, the appropriate paperwork is completed on a case-by-case basis.

11.1.2.1. Complete a Waste Profile Request Form (WPRF) describing the solid waste and send it to the Waste Management group for review.

11.1.2.2. If the Waste Management group determines that the solid waste is contaminated below the level of concern, dispose of the waste as ordinary laboratory trash.

11.1.2.3. If the Waste Management group determines that the solid waste is contaminated above the level of concern, request pickup of the contaminated waste as described in Sec. 11.3.

11.2. Liquid waste.

11.2.1. Accumulate liquid waste containing hazardous contaminants, such as solutions of trace metals above the limits posted for dumping at each lab sink at TA-50, in a coated glass jar in a secondary containment tray and keep it segregated from liquid waste contaminated with listed organics or cyanide greater than 0.5 ppm.

11.2.2. Label the bottle with a hazardous waste label, a corrosive label, a toxic label, and a label indicating its use for trace metal waste. Date the label.

11.2.3. Open the bottle only for the time necessary to add waste.

11.2.4. Keep full bottles in the secondary containment tray pending pickup by the Waste Management group.

11.2.5. Label a new bottle for further use.

11.2.6. Dump liquid inorganic wastes which do not contain any EPA-listed components, or which have toxic metals below the limits posted at lab sinks at TA-50, directly into the lab sink.

11.3. Waste pickup.

11.3.1. Request pickup by the Waste Management group of solid waste or a full bottle of liquid waste containing trace metals using the current Chemical Waste Disposal Request Form (CWDR). The current Waste Profile Request Form (WPRF) that describes the waste is referenced on the CWDR.

11.3.2. The Waste Management group picks up the waste for disposal in accord with Laboratory policy.

12. Source Material

12.1. *Analytical Methods for Atomic Absorption Spectrophotometry*, (Perkin-Elmer, Norwalk, Conn., 1976).

12.2. *Instructions: Zeeman/5000 System*, (Perkin-Elmer, Norwalk, Conn., 1982).

12.3. Methods for Chemical Analysis of Water and Wastes, EPA-600/4-79-020 U.S. Environmental Protection Agency, (rev. March 1983).

12.4. Perkin-Elmer chart 0993-8199 Rev. D (11/89).

12.5. "Test Methods for Evaluation of Solid Waste: Laboratory Manual of Physical and Chemical Methods," EPA report no. SW-846.

12.6. "Chemical, Hazardous, and Mixed Waste," Administrative Requirement 10-3, in *Environment, Safety, and Health Manual*, Los Alamos National Laboratory Manual, Chapter 1 (most recent edition).

Revisions or additions to the procedure are marked (▒). Where a section heading is marked the entire section has been revised.

MERCURY IN ENVIRONMENTAL MATERIALS — COLD VAPOR GOLD FILM ANALYZER

Analyte: Mercury	**Method No.:** EI730
Matrix: Water, soils, sediments	**Minimum Detectable Concentration:** 3 ng/g in solid, 0.05 ng/mL in water
Procedure: Cold vapor gold film resistance analysis	
Effective Date: 10/01/87 to 05/24/93	**Author:** Ernest S. Gladney Michael G. Bell

SAFETY NOTE: Before beginning this procedure, read all of the Material Safety Data Sheets for the chemicals listed in Sec. 7. Read Sec. 4.3 of the EM-9 Safety Manual for information on personal protective clothing and equipment.

1. Principle of Method

1.1. Leach mercury from soils and sediments using a simple cold-acid procedure. Waters may be run directly without additional processing.

1.2. Reduce Hg^+ in solution to Hg with $SnCl_2$.

1.3. Purge Hg from solution with a stream of air and almagamate it on gold film contained within the analyzer system.

1.4. Determine the Hg concentration by measuring the change in electrical resistance of the gold film.

2. Sensitivity

2.1. Approximately 1 ng of Hg can be detected from a 30-mL sample solution, yielding a detection limit of 0.05 ng/mL in water and 3-5 ng/g in solid samples. No system blank has been observed.

3. Accuracy and Precision

3.1. The following results have been obtained in 25-mL aliquots of NIST SRM 1642B.

CVGFA (ng/mL)	Certified Value (ng/mL)
1.62 ± 0.10	1.49 ± 0.06

3.2. In HNO_3-HCl extracts of 1-g samples of soil and sediment reference materials the following results have been obtained (ng/g):

Agency	Material	CVGFA mean ± SD	(n)	Certified or consensus value mean ± SD
NIST	1633A	133 ± 14	9	160 ± 10
	1646	65 ± 16	10	63 ± 12
	8032	69 ± 3	8	57 ± 4
	8033	110 ± 10	3	104 ± 12
CCRMP	SO-1	25 ± 5	54	21 ± 3
	SO-2	80	2	82 ± 12
	SO-3	17 ± 4	5	16 ± 5
	SO-4	40 ± 8	5	29 ± 4
USGS	GXR-1	3900 ± 200	4	4000 ± 300
	GXR-2	2800 ± 100	4	2700 ± 600
	GXR-3	350 ± 30	4	340 ± 40
	GXR-5	180 ± 30	4	160 ± 10
	GXR-6	73 ± 5	7	70 ± 20

3.3. A series of standard additions was run with NIST SRM 1645, a Chicago River sediment. This sediment is very oily and should present some of the most difficult matrix problems. The following spike recoveries were obtained:

Spike added (ng)	Spike recovered (ng)	(n)
5.0	5.7 ± 0.4	3
10.0	10.2 ± 0.2	4
15.0	15.1 ± 0.4	3

GROSS GAMMA IN ENVIRONMENTAL MATRICES

Analyte: All gamma-ray activities	**Method No.:** ER150
Matrix: Soil, biologicals, and water	**Minimum Detectable Activity:** Water 600 pCi/L Soil 3 pCi/g
Procedure: Instrumental gamma-ray NaI counting	**Accuracy and Precision:** Water 108% ± 53% Soil 104% ± 3%
Effective Date: 11/24/87	**Authors:** George H. Brooks Daryl Knab

SAFETY NOTE: Before beginning this procedure, read all of the Material Safety Data Sheets for the chemicals listed in Sec. 7. Read Sec. 4.3 of the EM-9 Safety Manual for information on personal protective clothing and equipment. Read Sec. 12 of this procedure for proper waste disposal practices.

1. Principle of Method

1.1. Samples are packaged in 500-mL (16-oz Nalgene) plastic bottles and are counted in a NaI(Tl) well-type scintillation detector for 5 min without chemical processing.

1.2. The sample size is 500 mL for liquids and 100 g for solids.

2. Sensitivity

2.1. The limits of detection are 600 pCi/L for aqueous solutions and 3 pCi/g for solids at the 661-keV ^{137}Cs line.

3. Accuracy and Precision

3.1. This method is intended as a qualitative assessment of gross gamma activity, but the accuracy and precision have been assessed using ^{137}Cs standards. For 0.5-L water samples the accuracy at 1400 pCi/L is 108% ± 53%. For 100-g soil samples at 220 pCi/g the accuracy is 104% ± 3%.

3.2. Samples showing activity levels significantly above background may be subjected to further analysis to determine the exact source of the activity.

4. Interferences

4.1. Although the method is intended to measure gamma-emitting isotopes, the wall thickness of the detector is such that high-energy beta particles from the sample will also be counted.

5. Collection and Storage of Samples

5.1. There are no special collection and storage requirements.

6. Apparatus

6.1. Gamma counter: Model No. 550 EG&G Ortec, equipped with a 4-in. diam × 6-in. NaI(Tl) well-type scintillation detector, with a 3-in. diam × 5.5-in. well and a single-channel analyzer. The system window is adjusted to observe 0- to 2-MeV gamma rays.

6.2. Amplifier: Model No. 572, EG&G Ortec.

6.3. Timer/counter: Model No. 871, EG&G Ortec.

6.4. Bias supply: Model No. 459 EG&G Ortec.

6.5. Bottles: 500-mL, polyethylene, Nalgene, catalog no. 20002-0016.

6.6. Analytical balance: 300-g minimum capacity.

6.7. Bags: Clear low-density polyethylene (LDPE), 0.002 in. thick, sized to fit 500-mL bottles. The bags protect the detector from surface contamination on the bottles.

6.8. Funnel: polyethylene.

7. Reagents

7.1. No reagents are required.

8. Calibration and Standards

8.1. Prepare all standards from National Institute of Standards and Technology (NIST) Standard Reference Material (SRM) 4233-B, ^{137}Cs Burn-up standard.

8.1.1. Prepare the liquid standard by diluting an aliquot of the stock solution to 500 mL with distilled water. Place the standard in a 500-mL polyethylene bottle.

8.1.2. Prepare the soil standard by evaporating an aliquot of the stock solution on 100 g of blank soil under an infrared lamp. The solution must not contact the walls or bottom of the container. Thoroughly blend the dry standard with a stainless-steel spatula and transfer it to a polyethylene bottle with the aid of a polyethylene powder funnel and a small brush.

8.2. Count an appropriate quality control material with each sample set to record detector system performance.

8.3. The liquid blank is 500 mL of distilled water and the soil blank is 100 g of washed deep-well sand.

8.3.1. Count the appropriate blank (in triplicate) with each sample set. Use the data to calculate the background count of the counter.

9. Procedure

9.1. Soils.

9.1.1. Weigh 100 g of a dried soil sample into a polyethylene bottle.

9.1.2. Tightly cap the bottle and clean off any exterior contamination.

9.1.3. Place the sample into a plastic bag and insert it into the NaI(Tl) detector well.

9.1.4. Count the sample for 5 min.

9.1.5. Record the total counts and count time in minutes on the gross gamma analysis sheet accompanying the sample from the radiochemistry laboratory.

9.1.6. Count a soil quality control sample (single count), a soil blank (in triplicate), and a soil standard (in triplicate) for 5 min each. Record the counts of the quality control sample, blank sample, and soil standard on the gross gamma analysis sheet (Fig. 1).

9.2. Water.

9.2.1. Place 500 mL of a filtered water sample into a polyethylene bottle.

9.2.2. Proceed with Steps 9.1.2 through 9.1.5.

9.2.3. Count a water quality control sample (single count), a water blank (in triplicate), and a water standard (in triplicate) for 5 min each. Record the counts of the quality control sample, the blank sample, and the water standard on the gross gamma analysis sheet (Fig. 1).

10. Operation of Equipment

10.1. Check the EG&G Ortec Model No. 871 Timer/Counter parameters before each counting session. The timer display should read **5.0**, and the **Time Base** select light should read **Min**. Push the appropriate switches to modify the parameters to the correct setting. The counter display should read **Counter**. Use the Counter/Timer select switch to adjust to the correct setting.

10.2. The EG&G Ortec Model No. 459 Bias Supply should be set at 1000 V. If the bias supply is not at the correct setting, adjust the potentiometer to provide the correct voltage.

NOTE: If the voltage is incorrectly set, adjust to the correct voltage with increments no larger than 100 V/s.

11. Calculations

11.1. Calculations of radiometric counting data for determinations are made without a radiotracer. Most data values are assumed to have Poisson distributions and all time-measurement errors are assumed to be insignificant.

11.2. Counting efficiency.

11.2.1. The counting efficiency of the counter for a single standard run is calculated using the following equation:

$$E = \frac{\left(\frac{C_s}{T_s} - \overline{B}\right)}{A_s} ,$$

where E = efficiency (counts per disintegration),
C_s = gross counts for the standards,
T_s = counting time for standard (min),
$\overline{B}$ = average background count rate, and
A_s = activity of the standard (dpm).

11.2.2. The average counter efficiency is calculated from a running average of the last n values of individual E determinations using the following equation:

$$\overline{E} = \frac{\sum_{i=1}^{n} E_i}{n} ,$$

where $\overline{E}$ = the running average of the counting efficiency,
E_i = the individual counting efficiencies from Step 11.2.1, and
n = the number of measurements used for calculation.

11.2.3. The standard deviation of $\overline{E}$ is calculated as follows:

$$SD(\overline{E}) = \overline{E} \times \sqrt{\frac{\sum_{i=1}^{n} (E_i - \overline{E})^2}{(n-1)\, n\, \overline{E}^{\,2}} + \frac{(\sigma_{A_s})^2}{A_s^2}} ,$$

where $SD(\overline{E})$ = standard deviation of the average efficiency,
$\overline{E}$ = average efficiency (counts per disintegration) from Step 11.2.2,
E_i = individual efficiencies from Step 11.2.1,
n = number of values of E used,
A_s = activity of the standard (dpm), and
σA_s = stated standard deviation associated with the known value of A_s.

11.2.4. The standard deviation of an individual E is calculated as follows:

$$SD(E) = E \times \sqrt{\frac{\frac{C_s}{T_s^2} + \frac{C_b}{T_b^2}}{\left(\frac{C_s}{T_s} - \frac{C_b}{T_b}\right)^2} + \frac{(\sigma_{A_s})^2}{A_s^2}} ,$$

where $SD(E)$ = standard deviation of E (counts per disintegration),
E = counting efficiency from Step 11.2.1,
C_s = gross counts for the standard,
T_s = counting time for the standard,
C_b = gross counts for the background,
T_b = counting time for the background (min),
A_s = activity of the standard (dpm), and
σA_s = standard deviation of standard activity.

11.3. Background.

11.3.1. The background count rate is calculated as follows:

$$B = \frac{C_b}{T_b} ,$$

where B = background count rate (cpm),
C_b = gross counts of background, and
T_b = counting time of the background (min).

11.3.2. A running average of the background count rate is calculated using the following equation:

$$\overline{B} = \frac{\sum_{i=1}^{n} B}{n} ,$$

where $\overline{B}$ = average background count rate,
B = background count rate, and
n = number of values used.

11.3.3. The standard deviation of the average background count rate is calculated using the following equation:

$$SD(\overline{B}) = \overline{B} \times \sqrt{\frac{\sum_{i=1}^{n} (B - \overline{B})^2}{(n-1) \times n \times \overline{B}^2}} ,$$

where $SD(\overline{B})$ = standard deviation of the running average of the background,
$\overline{B}$ = average background from Step 11.3.2,
B = individual background count rate, and
n = number of values used.

11.4. Sample activity.

11.4.1. The activity in the samples is calculated as follows:

$$A_x = \frac{\left(\frac{C_x}{T_x} - \overline{B}\right)}{\overline{E}} ,$$

where A_x = sample activity (dpm),
C_x = gross counts for the sample,
T_x = counting time for the sample (min),
$\overline{B}$ = average background count rate (cpm), and
$\overline{E}$ = average counting efficiency.

11.4.2. The standard deviation of the activity in the sample is calculated as follows:

$$SD\ (A_x) = |A_x| \times \sqrt{\frac{\frac{C_x}{T_x^2}}{\left(\frac{C_x}{T_x} - \overline{B}\right)^2}} ,$$

where $SD\ (A_x)$ = standard deviation of sample activity (dpm),
$|A_x|$ = absolute value of A_x from Step 11.4.1,
C_x = gross counts of sample,
T_x = sample counting time, and
$\overline{B}$ = average background count rate.

11.4.3. The minimum detectable activity for high-background instruments is determined to be three times the standard deviation of the background.

$$MDA = \frac{3 \times SD\ (B)}{K} ,$$

where MDA = minimum detectable activity (dpm),
SD (B) = standard deviation of the background count rate (cpm), and
K = constant in sample units.

11.5. Calculation to put the radiometric measurement into the required form for final reporting.

11.5.1. The reported activity is calculated as follows:

$$R_x = \frac{A_x}{K \times Q} ,$$

where R_x = sample activity in correct units for reporting (pCi/L),
A_x = sample activity (dpm),
K = conversion factor (2.22 pCi/dpm), and
Q = sample quantity analyzed (0.5 L or 100 g).

11.5.2. The propagated uncertainty of the reported activity is calculated using the following equation:

$$U_x = |R_x| \times \sqrt{SD\ (A_x)^2 + SD\ (\overline{B})^2 + SD\ (\overline{E})^2 + \frac{SD\ (Q)^2}{Q^2}} ,$$

where U_x = propagated uncertainty of the reported activity,
$|R_x|$ = absolute value of the reported activity,
$SD(A_x)$ = standard deviation of sample activity,
$SD(\overline{B})$ = standard deviation of the average background,
$SD(\overline{E})$ = standard deviation of the average efficiency,
$SD(Q)$ = standard deviation of the sample quantity aliquoted, and
Q = sample quantity aliquoted in reporting units.

12. Proper Waste Disposal Practices

12.1. No waste is generated in this process.

12.2. Samples are returned to the Sample Management section.

13. Source Materials

13.1. M. A. Gautier, E. S. Gladney, and B. T. O'Malley, "Quality Assurance for Health and Environmental Chemistry: 1985," Los Alamos National Laboratory report LA-10813-MS (1986).

13.2. "American National Standard for Performance Criteria for Radiobioassay," draft, American National Standards Institute, ANSI N13.30 (1989).

13.3. L. A. Currie, "Limits for Qualitative Detection and Quantitative Determination," *Analytical Chemistry* **40**, 586-593 (1968).

Revisions or additions to the procedure are marked (▒▒▒▒). Where a section heading is marked, the entire section has been revised.

ANALYSIS _____ ANALYST _____ DATE _____

SAMPLE NO.	REQUEST NO.	OWNER	WEIGHT OR VOLUME	RESIDUE WEIGHT	SAMPLE TYPE	GROSS COUNTS

Fig. 1. Gross gamma analysis data sheet.

URANIUM IN AIR FILTERS — DNA

Analyte: Uranium	**Method No.:** ER240
Matrix: Air filters	**Minimum Detectable Concentration:** 10 ng per filter
Procedure: Instrumental delayed neutron activation (DNA) analysis	**Accuracy and Precision:** 100% ± 6%
Effective Date: 01/01/84 to 07/20/93	**Authors:** Ernest S. Gladney George H. Brooks

SAFETY NOTE: Before beginning this procedure, read all of the Material Safety Data Sheets for the chemicals listed in Sec. 7. Read Sec. 4.3 of the EM-9 Safety Manual for information on personal protective clothing and equipment.

1. Principle of Method

1.1. Air particulates or industial hygiene swipe samples can be collected on almost any type of filter. Certain uranium fission products (primarily from ^{235}U) emit neutrons as their primary decay mode, with a "group" half-life of approximately 54 s. The neutrons from the samples are counted in ^{3}He detectors following a short thermal neutron irradiation.

1.2. Quantitative data on uranium concentrations are obtained by concurrent measurements of filters of known uranium content and isotopic ratio. Some assumptions concerning the uranium isotopic ratio of the samples must be made.

1.3. It is important to employ standards of the same matrix as the samples. Differences in neutron thermalization have been observed among waters, air filters, and biologicals, necessitating the use of matrix-based standards.

2. Sensitivity

2.1. Ten nanograms can normally be detected in the delayed neutron activation (DNA) system for liquid samples. The detection limit is strongly influenced by the precision of the system blank and can increase to 40 ng in the worst case observed. Saturation effects in the detector are insignificant at the 10,000-ng/filter level (see Fig. 1).

3. Accuracy and Precision

3.1. The National Institute of Standards and Technology (NIST) does not produce Standard Reference Materials (SRMs) for uranium on air filters that would permit a clear determination of the accuracy of the method. Since the detector used is geometry-independent for the 25-mL rabbit, small quantities of powdered silicates or NIST 1648 (Urban Particulate Matter) may be added to the filter substrate to produce in-house quality assurance materials. Analysis of replicate samples of this SRM (certified value of 5.5 ± 0.1 ppm) gave a mean value of 5.8 ± 0.8 ppm.

3.2. The Environmental Measurements Laboratory in New York circulates uranium air filter quality assurance materials as part of the Department of Energy Quality Assurance (DOE QA) Program. These samples cannot be accurately analyzed by DNA because they are prepared on glass fiber filters that have high levels of aluminium and sodium, which contribute to serious gamma-ray pulse pile-up losses in the neutron detector.

3.3. In-house quality assurance materials are prepared by pipetting known amounts of uranium standards onto Whatman or Millipore filters. Results for these analyses are consistently within one standard deviation of the spike concentration, which ranges from 0.1-1.0 μg/filter. Over a period of 2 y the determination of uranium in these materials had a mean recovery of 100% ± 6% on 33 measurements.

4. Interferences

4.1. Very high concentrations of fissionable Pu will create positive interference, but this has never been observed in routine air samples.

4.2. High concentrations of Th relative to U can create positive interferences since thorium fission is induced by fast neutrons. The degree of flux thermalization is very important in minimizing this source of interference. Thorium/uranium ratios of 100:1 are needed before the impact can be observed in our DNA system.

4.3. Departure of the U isotopic ratio from that assumed can create either positive or negative interferences. Uranium-238 fissions by fast neutron capture while ^{233}U fissions by thermal neutron capture, which has a different yield of delayed-neutron-emitting products. Some assumptions concerning the isotopic abundance in the samples must be made in order to calculate total uranium concentration. Uranium-235 may be reported directly with no such assumptions required.

4.4. Very large concentrations of high-cross-section isotopes with short-lived activation products can also interfere with uranium determination. High levels of Al, Na, or Cl produce intense gamma-ray fluxes in the detectors, which can

URANIUM IN BIOLOGICAL MATRICES — DNA

Analyte: Uranium	**Method No.:** ER250
Matrix: Wet or dry biologicals	**Minimum Detectable Concentration:** 0.5 ng/g
Procedure: Instrumental delayed neutron activation (DNA) analysis	**Accuracy and Precision:** 102% ± 11%
Effective Date: 01/01/84 to 07/20/93	**Authors:** Ernest S. Gladney Daniel R. Perrin George Brooks

SAFETY NOTE: Before beginning this procedure, read all of the Material Safety Data Sheets for the chemicals listed in Sec. 7. Read Sec. 4.3 of the EM-9 Safety Manual for information on personal protective clothing and equipment.

1. Principle of Method

1.1. Biological materials of almost any type can be analyzed for uranium. Dried vegetation, wet tissue, ashed tissue, and foods have been subjected to delayed neutron activation (DNA) at Los Alamos. Certain uranium fission products (primarily from ^{235}U) emit neutrons as their primary decay mode, with a "group" half-life of about 54 s. The neutrons from the samples are counted in ^{3}He detectors following a short thermal neutron irradiation.

1.2. Quantitative data on uranium concentrations are obtained by concurrent measurements of biological standards of known uranium content and isotopic ratio. Some assumptions concerning the uranium isotopic ratio of the samples must be made.

1.3. It is important to employ standards in the same matrix as the samples. Differences in neutron thermalization have been observed among waters, air filters, and biologicals, necessitating the use of matrix-based standards.

2. Sensitivity

2.1. Ten nanograms can normally be detected in 20-g samples in the DNA system for liquid samples. The detection limit is strongly influenced by the precision of the system blank and can increase to 40 ng. Saturation effects in the detector are insignificant at the 10,000-ng uranium level.

3. Accuracy and Precision

3.1. The method is independent of sample size or shape (geometry) for 25-mL rabbits.

3.2. There are several National Institute of Standards and Technology (NIST) Standard Reference Materials (SRMs) with certified or informational values for uranium in dry vegetation, foods, oyster tissue, and bovine liver. Our results for these materials are consistently within 1 standard deviation of the certified mean concentrations, which range from 1 to 500 ng/g of natural isotopic uranium. Over a period of 5 y the determination of uranium in these reference materials had a mean recovery of 102% ± 11% on 98 measurements. Uranium concentrations in NIST biological SRMs determined by DNA are listed below.

NIST SRM	EM-9 Value (ng/g)	NIST Certified Value (ng/g)
1570 Spinach	45.0 ± 0.8	46 ± 9
1571 Orchard Leaves	30.6 ± 0.6	29 ± 5
1573 Tomato Leaves	63 ± 3	61 ± 3
1575 Pine Needles	18 ± 6	20 ± 4
1577 Bovine Liver	0.99 ± 0.25	0.8
1567 Wheat Flour	0.95 ± 0.24	—
1568 Rice Flour	0.89 ± 0.22	—
1569 Brewers Yeast	470 ± 20	490 ± 20[a]

[a]Consensus value.

4. Interferences

4.1. Very high concentrations of fissionable Pu will create positive interference, but this has never been observed in routine biologicals.

4.2. High concentrations of Th relative to U can create positive interferences since thorium fission is induced by fast neutrons. The degree of flux thermalization is very important in minimizing this source of interference. Thorium/uranium ratios of 100:1 are needed before the impact can be observed in our DNA system. This is an unlikely source of interference since thorium is normally not abundant in biological materials.

4.3. Departure of the U isotopic ratio from that assumed can create either positive or negative interferences. Uranium-238 fissions by fast neutron capture while ^{233}U fissions by thermal neutron capture, which has a different yield of delayed-neutron-emitting products. Some assumptions concerning the isotopic abundance in the samples must be made in order to calculate the total uranium

URANIUM IN GEOLOGICALS — DNA

Analyte: Uranium	**Method No.:** ER260
Matrices: Soils, rocks, sediments, and ores	**Minimum Detectable Concentration:** 0.1 ppm
Procedure: Instrumental delayed neutron activation (DNA) analysis	**Accuracy and Precision:** 100% ± 6%
Effective Date: 01/01/84 to 07/20/93	**Authors:** Ernest S. Gladney Daniel R. Perrin George H. Brooks

SAFETY NOTE: Before beginning this procedure, read all of the Material Safety Data Sheets for the chemicals listed in Sec. 7. Read Sec. 4.3 of the EM-9 Safety Manual for information on personal protective clothing and equipment.

1. Principle of Method

1.1. Silicate materials from almost any source contain at least a small amount of uranium. Certain uranium fission products (primarily from ^{235}U) emit neutrons as their primary decay mode, with a "group" half-life of about 54 s. The neutrons from the samples are counted in ^{3}He detectors following a short thermal neutron irradiation.

1.2. Quantitative data on uranium concentrations are obtained by concurrent measurements of rocks or ores of known uranium content and isotopic ratio. Some assumptions concerning the uranium isotopic ratio of the samples must be made.

1.3. It is important to employ standards of the same matrix as the samples. Differences in neutron thermalization have been observed among silicates, waters, air filters, and biologicals, necessitating the use of matrix-based standards.

2. Sensitivity

2.1. Four hundred nanograms of uranium can normally be detected in the delayed neutron activation (DNA) system for silicate samples. The silicate system has much greater internal shielding than the liquid system to minimize gamma-ray pulse pile-up from ^{28}Al, a major short-lived activation product in rocks. This is the primary reason for the much higher detection limits observed with this system. The system blank is ordinarily not an important factor.

2.2. Saturation effects in the detector are an important consideration for samples with more than 1,000 μg total uranium of natural isotopic abundance (Fig 1). Higher concentrations of uranium may be handled by lowering the reactor power level.

3. Accuracy and Precision

3.1. The method is independent of sample size or shape (geometry) for 4-mL irradiation rabbits.

3.2. There are numerous National Institute of Standards and Technology (NIST), United States Geological Survey (USGS), and Canadian Certified Reference Materials Project (CCRMP) rock and ore reference materials with certified or well-established consensus values for uranium. Our results for these are consistently within ± 1 standard deviation of the certified mean concentrations, which range from 0.5 - 10,000 μg/g natural uranium (see Table I). Over a period of 5 years the determination of uranium in these reference materials had a mean recovery of 100% ± 6% on 800 measurements.

4. Interferences

4.1. Very high concentrations of fissionable Pu will create positive interference, but this has never been observed in routine samples.

4.2. High concentrations of Th relative to U can create positive interferences since thorium fission is induced by fast neutrons. The degree of flux thermalization is very important in minimizing this source of interference. Thorium/uranium ratios of 50:1 are needed before the impact can be observed in our silicate DNA system. This has been observed on the USGS GSP-1 reference material.

4.3. Departure of the U isotopic ratio from that assumed can create either positive or negative interferences. Uranium-238 fissions by fast neutron capture while ^{233}U fissions by thermal neutron capture, which has a different yield of delayed-neutron-emitting products. Some assumptions concerning the isotopic abundance in the samples must be made in order to calculate total uranium concentration. Uranium-235 may be reported directly with no such assumptions required.

5. Collection and Storage of Samples

5.1. There are no special collection requirements.

5.2. Store samples in containers that avoid contamination after collection.

URANIUM IN WATER — DNA

Analyte: Uranium	**Method No.:** ER270
Matrix: Natural and effluent waters	**Minimum Detectable Concentration:** 0.4 μg/L
Procedure: Instrumental delayed neutron activation (DNA) analysis	**Accuracy and Precision:** 100% ± 6%
Effective Date: 06/06/84 to 07/20/93	**Authors:** Ernest S. Gladney Daniel R. Perrin George H. Brooks

SAFETY NOTE: Before beginning this procedure, read all of the Material Safety Data Sheets for the chemicals listed in Sec. 7. Read Sec. 4.3 of the EM-9 Safety Manual for information on personal protective clothing and equipment.

1. Principle of Method

1.1. Aqueous samples of almost any type can be analyzed for uranium. Certain uranium fission products (primarily from ^{235}U) emit neutrons as their primary decay mode, with a "group" half-life of about 54 s. The neutrons from the samples are counted in ^{3}He detectors following a short thermal neutron irradiation.

1.2. Quantitative data on uranium concentrations are obtained by concurrent measurements of aqueous standards of known uranium content and isotopic ratio. Some assumptions concerning the uranium isotopic ratio of the samples must be made.

1.3. It is important to employ standards in the same matrix as the samples. Differences in neutron thermalization have been observed among waters, air filters, and biologicals, necessitating the use of matrix-based standards.

2. Sensitivity

2.1. Ten nanograms can normally be detected in 25-mL samples in the delayed neutron activation (DNA) system for liquid samples. The detection limit is strongly influenced by the precision of the system blank and can deteriorate to 40 ng. Saturation effects in the detector are insignificant up to the 10-mg/L (ppm) uranium level (Fig. 1).

3. Accuracy and Precision

3.1. The method is independent of sample size or shape (geometry) for 25-mL rabbits.

3.2. There are no National Institute of Standards and Technology (NIST) Standard Reference Materials (SRMs) for uranium in water. Both the Environmental Protection Agency (EPA) and the Department of Energy (DOE) Environmental Measurements Laboratory (EML) circulate uranium-in-water quality assurance intercomparison samples. Our results for these are consistently within ±1 standard deviation of the certified mean concentration, which ranges from 5 - 2000 ng/mL. Over a period of 5 y the determination of uranium in these reference materials had a mean recovery of 100% ± 6% on 340 measurements. Results on EPA Performance Evaluation samples are shown in the following table.

EPA Uranium in Water		
Date	EM-9 (pCi/L)	EPA (pCi/L)
September 1983	27.7 ± 1.4	26 ± 6
November 1983	18.2 ± 1.1	17 ± 4
February 1984	13.4 ± 1.2	15 ± 6
August 1984	23.6 ± 0.6	20 ± 6
September 1984	29.2 ± 1.0	31 ± 6
February 1985	11.9 ± 0.8	12 ± 6
August 1985	3.7 ± 0.5	4 ± 6
February 1986	9.1 ± 1.1	9 ± 6
August 1986	4.1 ± 0.6	4 ± 6
February 1987	8.2 ± 1.0	8 ± 6
August 1987	12.7 ± 0.7	13 ± 6
February 1988	3.3 ± 0.5	3 ± 6
August 1988	5.6 ± 0.4	6 ± 6

4. Interferences

4.1. Very high concentrations of fissionable Pu will create positive interference, but this has never been observed in routine water samples.

LA-10300-M Vol. III
Manual

UC-907
Issued: May 1986
Revised: November 1993

Health and Environmental Chemistry: Analytical Techniques, Data Management, and Quality Assurance

Edited by Margaret A. Gautier

Los Alamos
NATIONAL LABORATORY
Los Alamos, New Mexico 87545

CONTENTS

Preface WW-7

Acknowledgments WW-9

Abstract WW-11

The page numbering convention used in this manual consists of the specific procedure number (shown at left in list below) followed by the page number for that procedure. Thus, WI110-2 is page two of procedure WI110. The right column in the list below gives each procedure's status or effective date.

Waste Water Chemistry Analytical Techniques

Waste Water Analytical Procedures - Inorganic

Atomic Absorption

WI100 Atomic Absorption Methods—Method 7000 (SW 846) ..... Retired

WI110 Mercury in Solid or Semisolid Waste—
CVAA (EPA Method 7471) 11/90

WI120 Mercury in Leachates, Water, and Waste Water—CVAA 11/90

Colorimetry

WI200 Ammonia in Water and Waste Water—Flow Injection ..... Retired

WI210 Ammonia Nitrogen in Water and Waste Water—Auto Analyzer ..... Retired

WI220 Boron in Natural and Geothermal Waters—Flow Injection ..... Retired

WI230 Chemical Oxygen Demand in Water and Waste Water—
Auto Analyzer or Manual 09/91

WI240 Chloride in Water and Waste Water—Flow Injection ..... Retired

WI250 Chromium VI in Water and Waste Water—Spectrophotometric ..... Retired

WI260	Chromium VI in Water and Waste Water—Flow Injection	08/91
WI270	Cyanide in Waste Water—Auto Analyzer	Retired
WI280	Nitrate in Water and Waste Water—Flow Injection	Retired
WI290	Nitrate Nitrogen in Water and Waste Water—Auto Analyzer	Retired
WI300	Nitrite Nitrogen in Water and Waste Water—Auto Analyzer	Retired
WI310	Nitrite Nitrogen in Water and Waste Water—Flow Injection	Retired
WI320	Phosphorus in Water and Waste Water—Auto Analyzer	01/92
WI330	Silica in Water and Waste Water—Spectrophotometric	Retired
WI340	Silica in Water and Waste Water—Flow Injection	08/91
WI350	Sulfate in Water and Waste Water—Flow Injection	Retired
WI360	Total Kjeldahl Nitrogen in Water and Waste Water	In Progress
WI370	Turbidity of Water and Waste Water—Nephelometric	Retired

Gravimetry

WI400	Total Dissolved Solids in Water and Wastewater	08/93
WI410	Total Suspended Solids in Water and Wastewater	08/93

Ion Chromatography

WI420	Calcium and Magnesium in Water and Waste Water—IC	Retired
WI425	Chloride and Sulfate in Water and Waste Water—IC	In Progress
WI428	Hardness of Water and Waste Water—Calculation	02/92
WI430	Sodium and Potassium in Water and Waste Water—IC	Retired
WI435	Sodium, Potassium, Calcium, and Magnesium by IC—Isocratic Determination with IONPAC CS10 Column	06/92

Potentiometry

WI440	Ammonia in Water and Waste Water—ISE	In Progress
WI450	Conductivity of Water, Wastewater, and Atmospheric Deposition	08/93
WI460	Fluoride in Water and Waste Water	08/91
WI468	pH of Organic Waste Materials	11/91
WI470	pH of Water, Waste Water, and Atmospheric Deposition	08/93
WI480	Residual Chlorine in Water—Amperometric Titration	03/93

Titrimetry

WI500	Alkalinity in Water and Waste Water	09/91
WI510	Chemical Oxygen Demand in Water and Waste Water—Titration	Retired
WI520	Halides in Waste Water and RCRA Waste	Retired
WI529	Sulfite in Water and Waste Water—Titrimetry	03/91
WI530	Total Cations in Water and Waste Water—Ion Exchange and Potentiometric Titration	08/91

Miscellaneous

WI600	Ash of Organic Waste Material	Retired
WI610	Corrosivity of Solution Toward Steel	03/93
WI620	EP Toxicity Extraction	Retired
WI630	Flash Point—Pensky-Martens Closed Cup Tester	02/92
WI640	Heat Capacity of Combustible Materials	02/92
WI650	Inorganic Toxicity Characteristic Leaching Procedure (TCLP)	12/92
WI660	Oil and Grease, Total Recoverable	02/92

WI670	Specific Gravity of Water and Waste Water	02/92
WI680	Trace Metal Digestion—Drinking Water, Surface Water, and NPDES Effluents	01/92
WI681	Preparation of Aqueous Samples for Spectrochemical Analysis—FAAS and ICP-OES	08/93
WI685	Preparation of Aqueous Samples for Spectrochemical Analysis—GFAAS and ICP-MS	08/93
WI690	Preparation of Sediment, Sludge, and Soil Samples for Spectrochemical Analysis—FAAS and ICP-OES	08/93
WI691	Preparation of Sediment, Sludge, and Soil Samples for Spectrochemical Analysis—GFAAS and ICP-MS	08/93
WI700	Trace Metal Digestion—Sludge	02/91
WI710	Viscosity	In Progress

Waste Water Analytical Procedures - Radiochemical

WR100	Americium-241 in Waste Water—Instrumental Gamma-Ray Spectrometry Using a Ge(Li) Detector	03/93
WR110	Americium-241 in Waste Water and Filter Cake—Instrumental Gamma-Ray Spectrometry Using a NaI Detector	03/93
WR120	Cesium-137 in Waste Water—Instrumental Gamma-Ray Spectrometry Using a Ge(Li) Detector	03/93
WR130	Cesium (Radioactive) in Waste Water—Phosphomolybdate Procedure	Retired
WR140	Gamma Activity in Waste Water—Gamma Spectrometry with Lithium-Drifted Germanium Detector	03/93
WR150	Gross Alpha, Beta, and Gamma Activity in Waste Water, Soil, Filter Cake, and Organic Materials—Gas Flow Proportional Counting	03/93
WR160	Gross Gamma Activity in Liquid Waste Water—NaI Detector	Retired

WR170 Plutonium, Americium, and Uranium in Waste Water and Filter Cake—Aluminum Nitrate/Aliquat-336 Procedure ..... Retired

WR180 Plutonium, Americium, and Uranium in Waste Water and Filter Cake—Neodymium Fluoride Coprecipitation 04/93

WR190 Strontium-89 and Strontium-90 in Waste Water—Ion Exchange 04/93

WR200 Tritium in Waste Water and Oil—Liquid Scintillation Counting 03/93

MERCURY IN SOLID OR SEMISOLID WASTE — CVAA (EPA METHOD 7471)

Analyte: Mercury	**Method No.:** WI110
Matrix: Soil, sediment, sludges	**Minimum Detectable Concentration:** 0.2 μg/L
Procedure: Cold vapor atomic absorption (CVAA)	**Accuracy and Precision:** See Section 2
Effective Date: 01/01/88 to 08/28/92	**Author:** Mary Carol Williams

SAFETY NOTE: Before beginning this procedure, read all of the Material Safety Data Sheets for the chemicals listed in Sec. 7. Read Sec. 4.3 of the EM-9 Safety Manual for information on personal protective clothing and equipment.

1. Principle of Method

1.1. Method 7471 is approved for measuring total mercury (organic and inorganic) in soils, sediments, bottom deposits, and sludge-type materials. All samples must be subjected to an appropriate dissolution step prior to analysis.

1.2. Prior to analysis, the solid or semisolid samples must be prepared according to the procedures discussed in this method.

1.3. Method 7471, a cold vapor atomic absorption (CVAA) method, is based on the absorption of radiation at the 253.7-nm wavelength by mercury vapor. The mercury is reduced to the elemental state and aerated from solution in a closed system. The mercury vapor passes through a cell positioned in the light path of an atomic absorption spectrophotometer. Absorbance (peak area) is measured as a function of mercury concentration.

1.4. The typical detection limit for this method is 0.2 μg/L in solution.

2. Accuracy and Precision

2.1. Precision and accuracy data are available in Method 245.5 of *Methods for Chemical Analysis of Water and Waste* (see Source Material 9.2).

3. Quality Control

3.1. All quality control data should be kept up to date and available.

3.2. Calibration curves must be composed of a minimum of one blank and three standards. A calibration curve should be made for every hour of continuous sample analysis.

3.3. Dilute samples if they are more concentrated than the highest standard or if they fall on the plateau of a calibration curve.

3.4. Employ a minimum of one blank per sample batch to determine if contamination or any memory effects are occurring.

4. Interferences

4.1. Potassium permanganate is added to eliminate possible interference from sulfide. Concentrations as high as 20 mg/L of sulfide as sodium sulfide do not interfere with the recovery of added inorganic mercury from Type II water.

4.2. Copper has also been reported to interfere; however, copper concentrations as high as 10 mg/L had no effect on recovery of mercury from spiked samples.

4.3. Seawaters, brines, and industrial effluents high in chlorides require additional permanganate (as much as 25 mL) because during the oxidation step, chlorides are converted to free chlorine, which also absorbs radiation of 253.7 nm. Care must therefore be taken to ensure that free chlorine is absent before the mercury is reduced and swept into the cell. This may be accomplished by using an excess of hydroxylamine sulfate reagent (25 mL). In addition, the dead air space in the biological oxygen demand bottle must be purged before adding stannous sulfate. Both inorganic and organic mercury spikes have been quantitatively recovered from seawater by using this technique.

4.4. Certain volatile organic materials that absorb at this wavelength may also cause interference. A preliminary run without reagents should determine if this type of interference is present.

5. Sample Collection and Preservation

5.1. All sample containers must be prewashed with detergents, acids, and Type II water. Plastic or glass containers are suitable.

5.2. Aqueous samples must be acidified to a pH <2 with nitric acid. Solid samples must be refrigerated until digestion.

5.3. For solids or semisolids, moisture may be driven off in a drying oven at a temperature of 60°C.

MERCURY IN LEACHATES, WATER, AND WASTE WATER — CVAA

Analyte: Mercury	**Method No.:** WI120
Matrix: Water, waste water, extracts, leachates	**Detection Limit:** 0.2 μg/L **Range:** 0.2 - 4.0 μg/L
Procedure: Cold vapor atomic absorption	**Accuracy and Precision:** 98% ± 15% RSD of EPA WP475/4
Effective Date: 06/17/85 to 07/15/92	**Author:** Mary Carol Williams

SAFETY NOTE: Before beginning this procedure, read all of the Material Safety Data Sheets for the chemicals listed in Sec. 6. Read Sec. 4.3 of the EM-9 Safety Manual for information on personal protective clothing and equipment.

1. Principle of Method

1.1. Organic and inorganic mercury compounds are broken down and converted to mercuric (Hg^{+2}) ions. The Hg^{+2} ions are reduced to free mercury which is swept into a quartz tube in the light path by nitrogen gas. Absorbance (peak area) is measured at 253.7 nm as a function of mercury concentration.

1.2. An electrodeless discharge lamp is used to provide a source characteristic for each element.

2. Accuracy, Precision, and Percent Recovery

2.1. The determination of Hg in Environmental Protection Agency SRM WP475/4 (0.75 ± 0.22 μg/L) over a period of 12 months (N = 9) had a mean of 0.74 μg/L and a relative standard deviation (RSD) of 15%.

2.2. Fifty-six samples spiked with 10 μg/L of Hg over a period of 12 months had an average recovery of 98% and an RSD of 12%. The percent recovery ranged from 84% to 118%.

3. Interferences

3.1. Possible interference from sulfide (up to 20 mg $S^{=}$/L) is reduced by the addition of potassium permanganate.

3.2. Copper has been reported to interfere. No effect was reported at copper concentrations as high as 10 mg Cu^{+2}/L.

3.3. High chloride interference is reduced by the addition of permanganate. Free chlorine (which absorbs at 253 nm) is released after the addition of hydroxylamine chloride by vigorous stirring.

3.4. Some volatile organics may also absorb at this wavelength. Use of a background corrector is required. A preliminary run without reagents should determine if this type of interference is present.

4. Collection and Storage of Samples

4.1. Samples are collected in polyethylene bottles and are immediately acidified to pH < 2 with concentrated HNO_3.

4.2. Samples must be digested and analyzed within 28 days (see Step 8.2).

5. Apparatus

5.1. Atomic absorption spectrophotometer (AAS): Model 5000, Perkin-Elmer, Norwalk, Connecticut.

5.2. Vapor generator assembly (VGA): with absorption cell and burner head. Model VGA-76, Varian Instrument Group Marketing, Sunnyvale, California.

5.3. Data station: Model 3600, Perkin-Elmer, Norwalk, Connecticut.

5.4. Electrodeless discharge lamp.

5.5. Pipettor: 10-mL Brinkman Macro-transferpettor.

5.6. Volumetric pipettes: class A, various sizes.

5.7. Volumetric flasks: class A, various sizes.

5.8. Disposable polyethylene centrifuge tubes.

5.9. Eppendorf pipettes: 1-mL.

5.10. Repipette dispensers.

6. Reagents

6.1. Nitrogen (100 psi minimum tank pressure and 30-50 psi regulator pressure).

6.2. ASTM Type II water (double-deionized, less than 18 μmhos/cm). Water should be monitored for impurities.

6.3. Sulfuric acid (concentrated, atomic-absorption-grade).

TOTAL DISSOLVED SOLIDS IN WATER AND WASTEWATER

Analyte: Total Dissolved Solids, TDS	**Method No.:** WI400 (EPA 160.1)
Matrix: Water and wastewater	**Useful Range:** 10 to 20,000 mg/L
Procedure: TDS of an aqueous sample is measured gravimetrically	
Effective Date: 08/01/93	**Authors:** Richard Foust Vangie Hodge

SAFETY NOTE: Before beginning this procedure, read all of the Material Safety Data Sheets for the chemicals listed in Sec. 8. Read Sec. 4.3 of the EM-9 Safety Manual for information on personal protective clothing and equipment. Read Sec. 12 of this procedure for proper waste disposal practices.

1. Principle of Method

A well-mixed sample is filtered through a standard glass fiber filter. The filtrate is evaporated and the residue is dried to constant weight at 180°C.

2. Applicability

2.1. This method describes a procedure for determination of total dissolved solids (TDS) in aqueous samples. It is based on EPA Method 160.1 and Standard Method No. 2540 C, and is approved for NPDES samples.

2.2. The method is applicable to drinking, surface and saline waters and to domestic and industrial wastes.

2.3. If total suspended solids are being determined, the filtrate from that procedure (Method No. WI410) may be used for total dissolved solids.

3. Definitions

3.1. Total dissolved solids. TDS (also called residue, filterable) are defined as those solids which are capable of passing through a glass fiber filter and which remain after evaporation to dryness and drying to constant weight at 180°C.

4. Accuracy and Precision

4.1 The accuracy of this method is not known.

4.2. The precision of the method varies with the TDS value. In one study, a standard deviation of 7.2% RSD was observed for samples with a TDS value of 293 mg/L.

4.3. The practical range of values for this method is 10 to 20,000 mg/L.

5. Collection, Preservation, and Storage of Samples

5.1 Analysis should begin as soon as possible. Refrigeration or icing to 4°C, to minimize microbiological decomposition of solids, is recommended.

6. Interferences

6.1. Highly mineralized waters containing significant concentrations of calcium, magnesium, chloride, and/or sulfate may leave hygroscopic residues that will require prolonged drying and rapid weighing.

6.2. Samples containing high concentrations of bicarbonate will require careful and possibly prolonged drying at 180°C to ensure that all the bicarbonate is converted to carbonate.

6.3. The sample size for total dissolved solids should be limited to about 200 mg. Too much residue in the evaporating dish will form a crust over and entrap water that will not be driven off during drying.

7. Apparatus

7.1. Balance: analytical, capable of accurately weighing to ± 0.1 mg.

7.2. Filter discs: glass fiber, 4.7-cm or 2.1-cm, without organic binder, such as Millipore AP 40, Reeves Angel 934-AH, Gelman type A/E, or equivalent.

7.3. Filter holder: membrane filter funnel or Gooch crucible adapter.

7.4. Suction flask: 500-mL.

7.5. Gooch crucibles: 25-mL (if 2.1-cm filter is used).

7.6. Evaporating dishes: porcelain, 100-mL capacity. (Vycor or platinum dishes may be substituted.)

7.7. Steam bath.

7.8. Drying oven: 180°C ± 2°C.

7.9. Desiccator.

8. Reagents

8.1. ASTM Type I water.

9. Calibration and Standards

9.1. The analytical balance is calibrated regularly. An independent check is performed annually by an agency outside the Inorganic Analysis section.

10. Procedure

10.1 Preparation of glass fiber filter disc. Place the glass fiber filter on the membrane filter apparatus or insert it into the bottom of a suitable Gooch crucible with the wrinkled surface up. While vacuum is applied, wash the disc with three successive 20-mL volumes of distilled water. Remove all traces of water by continuing to apply vacuum after the water has passed through. Discard washings.

10.2. Preparation of evaporating dish. Heat the clean dish to 180 ± 2°C for 1 h. Cool in a desiccator and store until needed. Weigh immediately before use.

10.3 Assemble the filtering apparatus and begin suction. Shake the sample vigorously and rapidly transfer 100 mL to the funnel by means of a 100-mL graduated cylinder. If the total filterable residue is low, a larger volume may be filtered.

10.4 Filter the sample through the glass fiber filter and rinse with three 10-mL portions of distilled water. Continue to apply vacuum for about 3 min after filtration is complete to remove as much water as possible.

10.5. Transfer 100 mL (or a larger volume) of the filtrate to a weighed evaporating dish and evaporate to dryness on a steam bath.

10.6. Dry the evaporated sample for at least 1 h at 180 ± 2°C. Cool in a desiccator and weigh. Repeat the drying and weighing cycle until a constant weight is obtained or until weight loss on successive weighings is less than 0.5 mg.

11. Calculations

11.1. Calculate total dissolved solids as follows:

$$\text{TDS, mg/L} = \frac{(A - B) \times 1000}{C} ,$$

where A = mass of dried solids + dish (mg),

B = mass of dish (mg), and
C = volume of sample used (mL).

12. Proper Waste Disposal Practices

12.1. Solid waste.

12.1.1. If a solid waste is generated that may be contaminated at a level of concern, the appropriate paperwork is completed on a case-by-case basis.

12.1.2. Complete a Waste Profile Request Form (WPRF) describing the solid waste and send to the Waste Management group for review.

12.1.3. If the Waste Management group determines that the hazardous or radioactive components of the solid waste are below the level of concern, dispose of the waste as ordinary laboratory trash.

12.1.4. If the Waste Management group determines that the solid waste is hazardous or radioactive, request pickup of the contaminated waste as described in Section 12.3.

12.2. Liquid waste.

12.2.1. Accumulate liquid waste containing hazardous contaminants, such as solutions of trace metals, in a glass jar in a secondary containment tray and keep segregated from liquid waste contaminated with organic or radioactive substances or cyanide.

12.2.2. Label the bottle with a hazardous waste label and a label indicating its use for trace-metal waste.

12.2.3. Periodically request pickup of the bottle as described in Section 12.3. Keep the bottle in the secondary containment tray until pickup by the Waste Management group.

12.3. Waste pickup.

12.3.1. Request pickup of solid or liquid waste using the current Chemical Waste Disposal Request Form (CWDR). The current Waste Profile Request Form (WPRF) that describes the waste is referenced on the CWDR.

12.3.2. The Waste Management group picks up the waste for disposal in accord with Laboratory policy.

13. Source Material

13.1. U. S. Environmental Protection Agency, "Methods for Chemical Analysis of Water and Wastes," EPA-600/4-79-020 (rev. March 1983).

13.2. Greenberg, A. E., Clesceri, L. S., and Eaton, A. D. *Standard Methods for Examination of Water and Waste Water*, 18th ed. American Public Health Association, Washington, D. C., 1992.

This procedure has been substantially revised. Individual changes are not highlighted as they are in other revised procedures.

TOTAL SUSPENDED SOLIDS IN WATER AND WASTEWATER

Analyte: Total Suspended Solids, TSS	**Method No.:** WI410 (EPA 160.2)
Matrix: Water and wastewater	**Useful Range:** 4 to 20,000 mg/L
Procedure: TSS of an aqueous sample is measured gravimetrically.	
Effective Date: 08/01/93	**Authors:** Richard Foust Vangie Hodge

SAFETY NOTE: Before beginning this procedure, read all of the Material Safety Data Sheets for the chemicals listed in Sec. 8. Read Sec. 4.3 of the EM-9 Safety Manual for information on personal protective clothing and equipment. Read Sec. 12 of this procedure for proper waste disposal practices.

1. Principle of Method

A well mixed sample is filtered through a standard glass fiber filter. The residue retained on the filter is dried to constant weight at 103-105°C.

2. Applicability

2.1. This method describes a procedure for the determination of total suspended solids (TSS) in aqueous samples. It is based on EPA Method 160.2 and Standard Method No. 2540 D, and is approved for NPDES samples.

2.2. The method is applicable to drinking, surface, and saline waters and to domestic and industrial wastes.

2.3. If total dissolved solids (Method No. WI400) are being determined, the filtrate from this method may be used as the sample for that determination.

3. Definitions

3.1. Total suspended solids. TSS (also called residue, nonfilterable) are defined as those solids which are retained by a glass fiber filter and remain after drying to constant weight at 103-105°C.

4. Accuracy and Precision

4.1. The accuracy of this method is not known.

4.2. The precision of the method varies with the TSS value. In one study, a standard deviation of 33% RSD was observed for samples with TSS values of 15 mg/L, a standard deviation of 10% RSD was found at 242 mg/L, and a 0.76% RSD standard deviation occurred at TSS values of 1707 mg/L.

4.3. The practical range of values for this method is 4 to 20,000 mg/L.

5. Collection, Preservation, and Storage of Samples

5.1. Nonrepresentative particulates such as leaves, sticks, fish, and artifacts should be excluded from the sample.

5.2. Analysis should begin as soon as possible after collection. Refrigeration or icing to 4°C, to minimize microbiological decomposition of solids, is recommended.

6. Interferences

6.1. Filtration apparatus, filter material, prewashing, postwashing, and drying temperature are specified because these variables have been shown to affect the results.

6.2. Samples that are high in dissolved solids or that may have elevated dissolved solids, such as saline waters, brines, and some wastes, may be subject to a positive interference. This potential interference can be minimized by selecting a filtering apparatus to permit washing of the filter and dissolved solids while on the filter (Sec. 10.5).

7. Apparatus

7.1. Balance: analytical, capable of accurately weighing to ± 0.1 mg.

7.2. Filter discs: glass fiber, without organic binder, such as Millipore AP 40, Reeves Angel 934-AH, Gelman type A/E, or equivalent.

NOTE: Because of the physical nature of glass fiber filters, the pore size cannot be controlled or measured. Terms such as pore size, collection efficiency, and effective retention are used to define this property in glass fiber filters. Values for these parameters vary for the filters listed above.

7.3. Filter support: filtering apparatus with reservoir and a coarse (40-60 μm) fritted disc as a filter support.

NOTE: Many funnel designs are available in glass or porcelain. The most common are Hirsch or Buchner funnels, membrane filter holders, and Gooch crucibles. All are available with coarse fritted disc.

7.4. Suction flask.

7.5. Drying oven: 103-105°C.

7.6. Desiccator.

8. Reagents

8.1. ASTM Type I water.

9. Calibration and Standards

9.1. The analytical balance is calibrated regularly. An independent check is performed annually by an agency outside the Inorganic Analysis section.

10. Procedure

10.1. Preparation of glass fiber filter disc. Place the glass fiber filter on the membrane filter apparatus or insert it into the bottom of a suitable Gooch crucible with the wrinkled surface up. While vacuum is applied, wash the disc with three successive 20-mL volumes of distilled water. Remove all traces of water by continuing to apply vacuum after the water has passed through. Remove the filter from the membrane filter apparatus, or both crucible and filter if Gooch crucible is used, and dry in an oven at 103-105°C for 1 h. Store in a desiccator until needed. Repeat the drying and weighing cycle until a constant weight is obtained (weight loss on successive weighings is less than 0.5 mg). Weigh immediately before use. After weighing, handle the filter or crucible/filter only with forceps, tongs, or gloves.

10.2. Selection of sample volume.

10.2.1. Filter 100 mL of sample. If the weight of captured residue is less than 1.0 mg, the sample volume must be increased to provide at least 1.0 mg of residue.

NOTE: Use the following procedure if filtration time exceeds 5 to 10 min or the filtration rate drops rapidly. Add a known volume of sample to the filter funnel and record the time elapsed after selected volumes have passed through the filter. Twenty-five-mL increments for timing are suggested. Continue to record the time and volume increments until the filtration rate drops rapidly. Plot the observed time versus volume filtered. Select as the proper filtration volume that volume just short of the time when a significant change in filtration rate occurred.

10.3. Assemble the filtering apparatus and begin suction. Wet the filter with a small volume of distilled water to seat it against the fritted support.

10.4. Shake the sample vigorously and quantitatively transfer the predetermined sample volume to the filter using a graduated cylinder. Remove all traces of water by continuing to apply vacuum after the sample has passed through.

10.5. With suction on, wash the graduated cylinder, filter, nonfilterable residue, and filter funnel wall with three portions of distilled water, allowing complete drainage between washings. Remove all traces of water by continuing to apply vacuum after the water has passed through.

NOTE: The volume used for one portion of wash water should equal approximately 2 mL per cm of filter diameter. For a 4.7-cm filter, each portion of wash water should be approximately 10 mL.

10.6. Carefully remove the filter from the filter support. Alternatively, remove the crucible and filter from the crucible adapter. Dry for at least 1 h at 103-105°C. Cool in a desiccator and weigh. Repeat the drying and weighing cycle until a constant weight is obtained (i.e., weight loss is less than 0.5 mg on successive weighings).

11. Calculations

11.1. Calculate total suspended solids as follows:

$$\text{TSS, mg/mL} = \frac{(A - B) \times 1{,}000}{C} ,$$

where A = mass of filter (or filter and crucible) + suspended solids (mg),
B = mass of filter, or filter and crucible (mg), and
C = volume of sample filtered (mL).

12. Proper Waste Disposal Practices

12.1. Solid waste.

12.1.1. If a solid waste is generated that may be contaminated at a level of concern, the appropriate paperwork is completed on a case-by-case basis.

12.1.2. Complete a Waste Profile Request Form (WPRF) describing the solid waste and send to the Waste Management group for review.

12.1.3. If the Waste Management group determines that the hazardous or radioactive components of the solid waste are below the level of concern, dispose of the waste as ordinary laboratory trash.

12.1.4. If the Waste Management group determines that the solid waste is hazardous or radioactive, request pickup of the contaminated waste as described in Section 12.3.

12.2 Liquid waste.

12.2.1. Accumulate liquid waste containing hazardous contaminants, such as solutions of trace metals, in a glass jar in a secondary containment tray and keep segregated from liquid waste contaminated with organic or radioactive substances or cyanide.

12.2.2. Label the bottle with a hazardous waste label and a label indicating its use for trace-metal waste.

12.2.3. Periodically request pickup of the bottle as described in Section 12.3. Keep the bottle in the secondary containment tray until pickup by the Waste Management group.

12.3. Waste pickup.

12.3.1. Request pickup of solid or liquid waste using the current Chemical Waste Disposal Request Form (CWDR). The current Waste Profile Request Form (WPRF) that describes the waste is referenced on the CWDR.

12.3.2. The Waste Management group picks up the waste for disposal in accord with Laboratory policy.

13. Source Material

13.1. U.S. Environmental Protection Agency, "Methods for Chemical Analysis of Water and Wastes," EPA-600/4-79-020 (rev. March 1983).

13.2. Greenberg, A. E., Clesceri, L. S., and Eaton, A.D. *Standard Methods for the Examination of Water and Waste Water*, 18th ed. American Public Health Association, Washington, D. C., 1992.

This procedure has been substantially revised. Individual changes are not highlighted as they are in other revised procedures.

CONDUCTIVITY OF WATER, WASTEWATER, AND ATMOSPHERIC DEPOSITION

Analyte: Conductance	**Method No.:** WI450 (EPA 120.1)
Matrix: Water, wastewater, and acid rain	**Accuracy:** bias -3.6%
Procedure: Conductivity of an aqueous solution is measured with a platinum conductivity cell.	**Precision:** 7.7% RSD
Effective Date: 08/01/93	**Authors:** Richard Foust Vangie Hodge

SAFETY NOTE: Before beginning this procedure, read all of the Material Safety Data Sheets for the chemicals listed in Sec. 8. Read Sec. 4.3 of the EM-9 Safety Manual for information on personal protective clothing and equipment. Read Sec. 12 of this procedure for proper waste disposal practices.

1. Principle of Method

The electrical conductivity of a sample is measured using a self-contained conductivity meter of the Wheatstone bridge type or equivalent. If measurements are not made at 25°C, appropriate temperature corrections are made and the results are reported as conductivity at 25°C.

2. Applicability

2.1. This method describes a procedure for determination of electrical conductivity of aqueous samples. It is based on EPA Method 120.1 and Standard Method No. 2510, and is approved for NPDES samples. Field measurement with comparable instruments are reliable.

2.2. The method is applicable to drinking, surface, and saline waters and to domestic and industrial wastes and acid rain (atmospheric deposition).

3. Definitions

3.1. Conductivity. The characteristic electrical property of a solution between two electrodes is called the conductivity (preferred to the term "specific conductance"). The conductance, G, of a solution is defined as the reciprocal of its resistance, R. The units of conductance are reciprocal ohms, (ohm^{-1}, often called "mhos"). The conductance is directly proportional to the electrode

surface area, A (cm^2), and inversely proportional to the distance between the electrodes, L (cm). The proportionality constant, k, from the relationship

$$G = k (A/L) ,$$

is called the conductivity. The units of conductivity are 1/ohm-cm or mho/cm. Conductivity is reported as micromhos per centimeter (μmho/cm).

3.2. Quality control sample. A solution of known conductivity obtained from a source outside the laboratory and used to check laboratory performance.

4. Accuracy and Precision

4.1. One quality control sample is processed and analyzed with each batch of 20 samples.

4.2. Six synthetic water samples were analyzed by 41 analysts in 17 laboratories using this method. The average precision for the method was 7.7% (as percent relative standard deviation) and the accuracy on these samples averaged -3.6% from the accepted value.

5. Collection, Preservation,and Storage of Samples

5.1. Analyses can be performed either in the field or laboratory.

5.2. If analysis is not completed within 24 h of sample collection, samples should be filtered through a 0.45-μm filter and stored at 4°C. Wash filter and apparatus with high-quality distilled water and prerinse with sample before use.

5.3. Store the samples in precleaned linear polyethylene, borosilicate glass, or Teflon bottles.

5.4. Complete the analysis within 28 d of collection.

6. Interferences

6.1. Instrument must be standardized with KCl solution before each use.

6.2. Conductivity cell must be kept clean.

6.3. Temperature variations and corrections represent the largest source of error.

7. Apparatus

7.1. Conductivity bridge: range 1 to 1000 μmho/cm.

7.2. Conductivity cell: platinum electrode type, cell constant 1.0, or micro dipping type cell with 1.0 constant. YSI #3403 or equivalent.

7.3. Thermometer: capable of being read to the nearest 0.1°C.

8. Reagents

8.1. ASTM Type I water.

8.2. Potassium chloride (ACS reagent-grade).

8.3. Standard KCl solution (0.01 M). Dissolve 0.7456 g dried KCl (2 h at 105°C) in ASTM Type I water and dilute to 1.000 L.

9. Calibration and Standards

9.1. The analyst should use the standard KCl solution (0.01 M, Sec. 8.3) and the table below to check the accuracy of the cell constant and the conductivity bridge. The accuracy of the cell constant should be checked annually.

Temperature, °C	Conductivity, 0.01 M KCl μmho/cm
21	1305
22	1332
23	1359
24	1386
25	1413
26	1441
27	1468
28	1496

10. Procedure

10.1. Follow the manufacture's directions for the operation of the instrument.

10.2. Allow samples to come to room temperature (23-27°C), if possible.

10.3. Determine the temperature of samples to within 0.5°C. If the temperature of the samples is not 25°C, make temperature corrections in accordance with Section 11.

11. Calculations

11.1. According to the instrument manufacturer's instructions, automatic temperature compensation is applied to all conductivity readings made on solutions that are not at 25°C.

11.2. When automatic temperature compensation is shown to give incorrect results, as determined from a standard 0.01 M KCl solution, correct for temperature correction as follows.

11.2.1. If the temperature of the sample is below 25°C, add 2% of the conductivity reading per degree.

11.2.2. If the temperature is above 25°C, subtract 2% of the conductivity reading per degree.

11.3. Report results as conductivity, μmho/cm, at 25°C.

12. Proper Waste Disposal Practices

12.1. Solid waste.

12.1.1. If a solid waste is generated that may be contaminated at a level of concern, the appropriate paperwork is completed on a case-by-case basis.

12.1.2. Complete a Waste Profile Request Form (WPRF) describing the solid waste and send to the Waste Management group for review.

12.1.3. If the Waste Management group determines that the hazardous or radioactive components of the solid waste are below the level of concern, dispose of the waste as ordinary laboratory trash.

12.1.4. If the Waste Management group determines that the solid waste is hazardous or radioactive, request pickup of the contaminated waste as described in Section 12.3.

12.2. Liquid waste.

12.2.1. Accumulate liquid waste containing hazardous contaminants, such as solutions of trace metals, in a glass jar in a secondary containment tray and keep segregated from liquid waste contaminated with organic or radioactive substances or cyanide.

12.2.2. Label the bottle with a hazardous waste label and a label indicating its use for trace-metal waste.

12.2.3. Periodically request pickup of the bottle as described in Section 12.3. Keep the bottle in the secondary containment tray until pickup by the Waste Management group.

12.3. Waste pickup.

12.3.1. Request pickup of solid or liquid waste using the current Chemical Waste Disposal Request Form (CWDR). The current Waste Profile Request Form (WPRF) that describes the waste is referenced on the CWDR.

12.3.2. The Waste Management group picks up the waste for disposal in accord with Laboratory policy.

13. Source Material

13.1. U.S. Environmental Protection Agency, "Methods for Chemical Analysis of Water and Wastes," EPA-600/4-79-020 (rev. March 1983).

13.2. Greenberg, A. E., Clesceri, L. S., and Eaton, A. D. *Standard Methods for the Examination of Water and Waste Water*, 18th ed. American Public Health Association, Washington, D. C., 1992.

This procedure has been substantially revised. Individual changes are not highlighted as they are in other revised procedures.

pH OF WATER, WASTE WATER, AND ATMOSPHERIC DEPOSITION

Analyte: Hydronium ion activity, pH	**Method No.:** WI470 (EPA 150.1)
Matrix: Water, wastewater, and acid rain	**Accuracy:** 0.1 pH unit
Procedure: pH of an aqueous sample is measured with pH electrode	**Precision:** 0.1 pH unit
	Sensitivity: 0.1 pH unit
Effective Date: 08/01/93	**Authors:** Richard Foust Vangie Hodge

SAFETY NOTE: Before beginning this procedure, read all of the Material Safety Data Sheets for the chemicals listed in Sec. 8. Read Sec. 4.3 of the EM-9 Safety Manual for information on personal protective clothing and equipment. Read Sec. 12 of this procedure for proper waste disposal practices.

1. Principle of Method

The pH of a sample is determined electrometrically using either a glass electrode in combination with a reference electrode or a combination electrode. Preferably, samples should be analyzed at 25°C. If this is not possible, appropriate temperature corrections are applied and the results are reported as pH at 25°C.

2. Applicability

2.1. This method describes a procedure for the determination of the pH of an aqueous sample. It is based on EPA Method 150.1 and Standard Method No. 2510, and is approved for NPDES samples.

2.2. The method is applicable to drinking, surface, and saline waters and to domestic and industrial wastes and acid rain (atmospheric deposition).

3. Definitions

3.1. Buffer solution. An aqueous solution of known pH, used to calibrate a pH meter.

3.2. Combination electrode. An electrode system used for pH measurement that incorporates both glass and reference electrodes within one probe.

3.3. Glass electrode. The sensor electrode of a pH measurement device. pH is determined by immersing the glass electrode and reference electrode into the solution to be tested.

3.4. pH. A measure of the intensity of the acidic or basic character of an aqueous solution, defined by the equation:

$$pH = -\log (a_{H^+}) \quad ,$$

where a_{H^+} = the hydronium ion activity.

Ionic interactions in aqueous solutions modify the behavior of all charged species, including the hydronium ion, H^+. The activity of the hydronium ion, therefore, is not equal to the hydronium ion concentration except in extremely dilute solutions. The pH values of natural waters range from 4 to 9.

3.5. Quality control sample. A solution of known pH is obtained from a source outside the laboratory and used to check laboratory performance.

3.6. Reference electrode. An electrode capable of producing a constant potential, used in combination with a glass electrode to measure pH. Common reference electrodes for pH measurement are saturated calomel and silver/silver chloride electrodes.

4. Accuracy and Precision

4.1. One quality control sample is processed and analyzed with each batch of 20 samples.

4.2. Six synthetic water samples were analyzed by 44 analysts in 20 laboratories using this method. The average precision for the method was 0.14 pH units and the accuracy on these samples averaged +0.01 Ph units from the accepted value. Sensitivity for the method is 0.1 pH unit.

5. Collection, Preservation, and Storage of Samples

5.1. It is preferred that samples be analyzed in the field at the time of collection. If samples are returned to the laboratory, the analysis should be performed within 2 h of sample collection.

5.2. High-purity waters and waters not at equilibrium with the atmosphere are subject to changes when exposed to the atmosphere. Therefore, the sample containers should be filled completely and kept sealed before analysis.

6. Interferences

6.1. The glass electrode, in general, is not subject to solution interferences from color, turbidity, colloidal matter, oxidants, reductants, or high salinity.

6.2. Sodium error at pH levels greater than 10 can be reduced or eliminated by using a "low sodium error" electrode.

6.3. Coatings of oily material or particulate matter can impair electrode response. These coatings can usually be removed by gentle wiping or detergent washing, followed by distilled water rinsing. An additional treatment with hydrochloric acid (1:10 dilution) may be necessary to remove any remaining film.

6.4. Temperature effects on the electrometric measurement of pH arise from two sources. The first is the change in electrode output with temperature. This interference can be controlled by using temperature-compensated instruments or by calibrating the electrode-instrument system at the temperature of the samples. The second source is the change of pH inherent in the sample at various temperatures. This error is sample-dependent and cannot be controlled. It should therefore be noted by reporting both the pH and temperature at the time of analysis.

7. Apparatus

7.1. pH meter: laboratory or field model. A wide variety of instruments is commercially available with various specifications and optional equipment.

7.2. Glass electrode.

7.3. Reference electrode: a calomel, silver-silver chloride, or other reference electrode of constant potential may be used.

NOTE: Combination electrodes incorporating both measuring and reference functions are convenient to use and are available with solid, gel-type filling materials that require minimal maintenance.

7.4. Magnetic stirrer and Teflon-coated stirring bar.

7.5. Thermometer or temperature sensor for automatic temperature compensation.

8. Reagents

8.1. ASTM Type I water.

8.2. Stock buffer solutions for electrode calibration. The suggested pH range is 4.0-11.0.

8.3. Primary standard buffer salts are available from the National Institute of Standards and Technology (NIST) and should be used in situations where extreme accuracy is necessary.

8.4. Preparation of reference solutions from these salts requires special precautions and handling, such as low-conductivity dilution water, drying ovens, and carbon-dioxide-free purge gas. These solutions should be replaced at least once each month.

8.5. Secondary standard buffers may be prepared from NBS salts or purchased as solutions from commercial vendors. These commercially available solutions, validated by comparison with NIST standards, are recommended for routine use.

9. Calibration and Standards

9.1. Because of the wide variety of pH meters and accessories, detailed operating procedures cannot be incorporated into this method. Each analyst must be acquainted with the operation of each system and familiar with all instrument functions. Special attention to care of the electrodes is recommended.

9.2. Each instrument/electrode system must be calibrated at a minimum of two points that bracket the expected pH of the samples and are three pH units or more apart. Repeat adjustments on successive portions of the two buffer solutions until readings are within 0.05 pH unit of the buffer solution value.

9.3. Recalibrate the meter at the startup each day, after every ten samples, and when subsequent sample pHs change by two units or more.

10. Procedure

10.1. Standardize the meter and electrode system as outlined in Sec. 9.

10.2. Place the sample or buffer solution in a clean glass beaker using a sufficient volume to cover the sensing elements of the electrodes and to give adequate clearance for the magnetic stirring bar.

10.3. If field measurements are being made, directly immerse the electrodes in the sample stream to an adequate depth and move in a manner to insure sufficient sample movement across the electrode sensing element.

10.4. If the sample temperature differs by more than 2°C from the buffer solution, correct the measured pH values. Instruments are equipped with automatic or manual compensators that electronically adjust for temperature differences. Refer to manufacturer's instructions.

10.5. After rinsing and gently wiping the electrodes, immerse them into the sample beaker or sample stream and stir at a constant rate to provide homogeneity and

suspension of solids. Rate of stirring should minimize the air transfer rate at the air-water interface of the sample. Record sample pH and temperature after the pH remains constant (less than 0.1 pH unit drift) for a period of one minute. Repeat the measurement on successive volumes of sample until values differ by less than 0.1 pH unit. Two or three volume changes are usually sufficient.

10.6. Do not use the magnetic stirrer for acid rain samples. Instead, gently swirl the sample for a few seconds after the introduction of the electrode(s). Allow the electrodes to equilibrate. Do not disturb the air-water interface while measurement is being made. If the sample is not in equilibrium with the atmosphere, pH values will change as the dissolved gases are either absorbed or desorbed. Record sample pH and temperature.

11. Calculations

11.1. pH meters read directly in pH units. Report pH to the nearest 0.1 unit and temperature to the nearest 1°C.

12. Proper Waste Disposal Practices

12.1. Solid waste.

12.1.1. If a solid waste is generated that may be contaminated at a level of concern, the appropriate paperwork is completed on a case-by-case basis.

12.1.2. Complete a Waste Profile Request Form (WPRF) describing the solid waste and send to the Waste Management group for review.

12.1.3. If the Waste Management group determines that the hazardous or radioactive components of the solid waste are below the level of concern, dispose of the waste as ordinary laboratory trash.

12.1.4. If the Waste Management group determines that the solid waste is hazardous or radioactive, request pickup of the contaminated waste as described in Section 12.3.

12.2. Liquid waste.

12.2.1. Accumulate liquid waste containing hazardous contaminants, such as solutions of trace metals, in a glass jar in a secondary containment tray and keep segregated from liquid waste contaminated with organic or radioactive substances or cyanide.

12.2.2. Label the bottle with a hazardous waste label and a label indicating its use for trace-metal waste.

12.2.3. Periodically request pickup of the bottle as described in Section 12.3. Keep the bottle in the secondary containment tray until pickup by the Waste Management group.

12.3. Waste pickup.

12.3.1. Request pickup of solid or liquid waste using the current Chemical Waste Disposal Request Form (CWDR). The current Waste Profile Request Form (WPRF) that describes the waste is referenced on the CWDR.

12.3.2. The Waste Management group picks up the waste for disposal in accord with Laboratory policy.

13. Source Material

13.1. U.S. Environmental Protection Agency, "Methods for Chemical Analysis of Water and Wastes," EPA-600/4-79-020 (rev. March 1983).

13.2. Greenberg, A. E., Clesceri, L. S., and Eaton, A.D. *Standard Methods for the Examination of Water and Waste Water*, 18th ed. American Public Health Association, Washington, D. C., 1992.

This procedure has been substantially revised. Individual changes are not highlighted as they are in other revised procedures.

RESIDUAL CHLORINE IN WATER — AMPEROMETRIC TITRATION

Analyte: Residual total chlorine and free chlorine	**Method No.:** WI480
Matrix: Water	**Detection Limit:** 0.05 mg/L
Procedure: Amperometric titration	**Accuracy and Precision:** 95% ± 6% (mean ± 1 sigma at the 1-mg/L level)
Effective Date: 09/24/85	**Author:** Terry D. Filer

SAFETY NOTE: Before beginning this procedure, read all of the Material Safety Data Sheets for the chemicals listed in Sec. 7. Read Sec. 4.3 of the EM-9 Safety Manual for information on personal protective clothing and equipment. Read Sec. 12 of this procedure and Source Materials 13.2 and 13.3 for proper waste disposal practices.

1. Principle of Method

1.1. The amperometric titration method is a special adaptation of the polarographic principle.

1.2. Free available chlorine is titrated at a pH between 6.5 and 7.5, a range in which the combined chlorine reacts slowly.

1.3. Combined chlorine is titrated in the presence of potassium iodide in the pH range 3.5 to 4.5.

2. Sensitivity

2.1. For routine measurements of a 200-mL sample, the minimum detection limit is 0.01 mg.

3. Accuracy and Precision

3.1. Average recovery of a residual chlorine spike is 95% ± 6% at 1 mg/L.

4. Interferences

4.1. Accurate determination of free chlorine cannot be made in the presence of nitrogen trichloride or chlorine dioxide because they titrate partly as free chlorine.

4.2. Free halogens other than chlorine titrate as free chlorine.

5. Collection and Storage of Samples

5.1. Begin the chlorine determination immediately after sampling. Avoid excessive light and agitation.

5.2. Do not store samples that are to be analyzed for chlorine.

5.3. Analysis must be completed immediately.

6. Apparatus

6.1. Amperometric titrator: Fisher and Porter, Series 17T 2000, Warminster, PA.

6.2. Beakers: 250-mL.

6.3. Cotton swabs: double-tipped.

6.4. Eyedroppers.

6.5. Burette: 25-mL.

7. Reagents

7.1. Standard phenylarsine oxide titrant (0.00564 N): Fisher & Porter, part number 141B106U01.

7.2. Potassium iodide solution (5%): Fisher & Porter, part number 141B109U01.

7.3. Buffer solution (pH 4): Fisher & Porter, part number 141B109U02.

7.4. Buffer solution (pH 7): Fisher & Porter, part number 141B109U03.

7.5. Standard chlorine solution: dilute 20 mL of household hypochlorite solution to 1 L.

7.6. Sodium thiosulfate (0.1 N): Baker analyzed reagent. Each lot is standardized at 25°C against National Institute of Standards and Technology (NIST) Standard Reference Material $K_2Cr_2O_7$.

7.7. Standard sodium thiosulfate titrant (0.025 N): dilute 250 mL of 0.100 N $Na_2S_2O_3$ to 1 L with freshly boiled distilled water. Add 4 g of sodium borate and 10 mg of mercuric iodide. Standardize this solution before each use with 0.025 N $K_2Cr_2O_7$.

7.8. Potassium dichromate (NIST primary standard).

7.9. Standard potassium dichromate (0.1000 N): dissolve 4.904 g of primary standard quality anhydrous $K_2Cr_2O_7$ in distilled water and dilute to 1 L. Store in a glass-stoppered bottle.

7.10. Standard potassium dichromate (0.0250 N): dilute 250 mL of 0.1000 N $K_2Cr_2O_7$ to 1 L with distilled water. Store in a glass-stoppered bottle.

7.11. Starch indicator solution (0.5%, preserved with salicylic acid).

7.12. Hypochlorite solution (household bleach).

7.13. Standard iodine solution (0.1 N): dissolve 40 g of KI in 25 mL of distilled water. Add 13 g of resublimed iodine and stir until dissolved. Transfer solution to a 1-L volumetric flask and dilute to volume. Standardize against 0.100 N $Na_2S_2O_3$.

7.14. Standard iodine titrant (0.0282 N): dissolve 25 g of KI in a small amount of distilled water in a 1-L volumetric flask. Add enough standardized 0.1 N iodine solution to yield a 0.0282 N solution. Dilute to 1 L with distilled water. Standardize daily using 0.025 N $Na_2S_2O_3$ solution. Store in amber bottles or in the dark. Keep solution out of direct sunlight at all times and keep from all contact with rubber.

8. Calibration and Standards

8.1. Standard sodium thiosulfate (0.025 N).

8.1.1. Add, with constant stirring, 1 mL of concentrated H_2SO_4, 10 mL of 0.025 N $K_2Cr_2O_7$, and 1 g of KI to 80 mL of distilled water. Let stand for 6 min in the dark.

8.1.2. Titrate immediately with 0.025 N $Na_2S_2O_3$ titrant until the yellow color of the liberated iodine is almost discharged.

8.1.3. Add 1 mL of starch indicator solution and continue titrating until the blue color disappears.

8.1.4. Calculate the normality of the $Na_2S_2O_3$.

$$N = \frac{0.25}{V} ,$$

where N = normality of $Na_2S_2O_3$, and
V = volume of $Na_2S_2O_3$ used (mL).

8.2. Standard iodine solution (0.0282 N).

8.2.1. Place approximately 20 mL of distilled water in a 125-mL Erlenmeyer flask. Add 5 mL of glacial acetic acid and approximately 1 g of KI. Add 10 mL of 0.0282 N iodine solution.

8.2.2. Titrate, out of direct sunlight, using 0.025 N $Na_2S_2O_3$ until the yellow color of the liberated iodine is almost discharged. Add 1 mL of starch solution and titrate until the blue color is discharged.

8.2.3. Calculate the normality of the iodine solution.

$$N(i) = \frac{V \times N}{10} ,$$

where N(i) = normality of iodine solution,
V = volume of $Na_2S_2O_3$ used (mL), and
N = normality of $Na_2S_2O_3$.

8.3. Standard chlorine solution.

8.3.1. Place 2 mL of acetic acid and 20 mL of distilled water in a 125-mL Erlenmeyer flask. Add approximately 1 g of KI. Add 10 mL of standard chlorine solution.

8.3.2. Titrate with standardized 0.025 N $Na_2S_2O_3$ titrant until the yellow iodine color almost disappears.

8.3.3. Add 1 to 2 mL of starch indicator solution and continue titrating until the blue color disappears.

8.3.4. Calculate the concentration of the standard chlorine solution.

$$Cl = \frac{V \times N \times 35.45}{10} ,$$

where Cl = chlorine as Cl_2 (mg/mL),
V = volume of titrant used (mL), and
N = normality of $Na_2S_2O_3$.

8.3.5. Prepare a standard chlorine working solution by diluting 10 mL of standard chlorine solution to 100 mL in a volumetric flask.

8.4. Standard phenylarsine oxide titrant.

8.4.1. Place 1 mL of freshly standardized iodine solution (0.0282 N) in a 250-mL beaker. Dilute to 200 mL with distilled water. Add 1 mL of KI solution.

8.4.2. Titrate with phenylarsine oxide solution using the amperometric end point, Step 9.2.

8.4.3. Calculate the normality of phenylarsine oxide.

$$N(p) = \frac{1.00 \times N(i)}{V} ,$$

where N(p) = normality of phenylarsine oxide,
N(i) = normality of iodine solution, and
V = volume of titrant used (mL).

8.5. Quality control (QC) standards.

8.5.1. A distilled water sample, an Environmental Protection Agency water-supply QC residual Cl sample, and four Cl_2 samples prepared from the standard chlorine working solution (Step 8.3.5) are analyzed with each sample batch.

8.5.2. Prepare the four Cl_2 samples by pipetting 5, 4, 3, and 2 mL of the chlorine working solution into four 250-mL beakers. Dilute each sample to 200 mL with distilled water.

8.5.3. Calculate the concentration of each Cl_2 sample.

$$C = \frac{V \times S}{2} ,$$

where C = concentration of chlorine solution (mg/L Cl_2),
V = volume of Cl_2 working solution (mL),
S = concentration of Cl_2 standard solution (mg/L).

9. Procedure

9.1. Determination of free residual chlorine.

9.1.1. Open the **REFILL** valve and fill the pipette in the amperometric titrator to the **0** mark.

9.1.2. Rinse the delivery tube and electrode and agitator assemblies with distilled water. Discard the drainage. If more than one week has passed since the last use of the apparatus, remove the electrode and clean with a cotton swab dipped in 1:1 HNO_3.

9.1.3. Place a 200-mL sample (or a known volume of sample diluted to 200 mL) in a 250-mL beaker.

9.1.4. Add one eyedropper, approximately 1 mL, of pH 7 buffer solution.

9.1.5. Turn the **FREE-OFF-TOTAL** switch to its **FREE** position.

9.1.6. Titrate the sample with phenylarsine oxide until the indicating pointer of the milliammeter falls to about 70% of full scale.

9.1.7. Add the titrant in decreasing increments until the addition of one more increment no longer causes a downward deflection of the pointer. The end point is that volume noted before the additional increment that no longer caused a downward deflection.

9.1.8. Record the volume of titrant used to reach the first end point, but do not refill the pipette.

9.2. Total residual chlorine.

9.2.1. Turn the **FREE-OFF-TOTAL** switch to the **TOTAL** position.

9.2.2. Add one eyedropper of pH 4 buffer solution and one eyedropper of 5% KI solution.

9.2.3. Titrate to a second end point.

9.2.4. Record the total volume of titrant used to reach the second end point and place the **FREE-OFF-TOTAL** switch to the **OFF** position.

10. Operation of Equipment

10.1. Refer to the operating manual for the amperometric titrator.

11. Calculations

11.1. Concentration of free residual chlorine.

$$Cl_2\text{-}F = \frac{A \times N \times 35450}{V},$$

where Cl_2-F = free residual chlorine (mg/L),
A = end point for the first titration (mL),
N = normality of phenylarsine oxide, and
V = volume of sample used (mL).

11.2. Concentration of total residual chlorine.

$$Cl_2\text{-}T = \frac{B \times N \times 35450}{V},$$

where Cl_2-T = total residual chlorine (mg/L),
B = end point for the second titration (mL),
N = normality of phenylarsine oxide, and
V = volume of sample used (mL).

12. Proper Waste Disposal Practices

12.1. Solid waste.

12.1.1. Solid waste containing hazardous chemicals above the level of concern is not generated in this procedure.

12.2. Liquid waste.

12.2.1. Accumulate liquid waste containing hazardous contaminants, such as a solution of trace metals, in a coated glass bottle in secondary containment. Keep segregated from liquid waste contaminated with organic or radioactive substances or cyanide.

12.2.2. Label the bottle with a hazardous waste label.

12.2.3. Open the bottle only for the time necessary to add waste to it.

12.2.4. When the bottle is full, cap and keep in the secondary containment tray pending pickup by the Waste Management group.

12.2.5. Label a new bottle for further use.

12.3. Waste pickup.

12.3.1. The surface exposure rate of the bottle of hazardous waste is determined by a radiation protection technician. If no surface contamination exists, the bottle can be removed from the controlled area by Waste Management.

12.3.2. Request pickup by the Waste Management group of a full bottle of liquid waste containing trace metals using the current Chemical Waste Disposal Request (CWDR). The current Waste Profile Request Form (WPRF) that describes the waste is referenced in the CWDR.

12.3.3. The Waste Management group picks up the waste for disposal according to Laboratory policy.

13. Source Material

13.1. American Public Health Association, American Waterworks Association, and Water Pollution Control Federation, *Standard Methods for the Examination of Water and Wastewater*, 16th ed., Method 408C (American Public Health Association, Washington, DC, 1985).

13.2. "Low-Level Radioactive Solid Waste," Administrative Requirement 10-2, in *Environment, Safety, and Health Manual*, Los Alamos National Laboratory Manual, Chapter 1 (most recent edition).

13.3. "Hazardous and Mixed Waste," Administrative Requirement 10-3, in *Environment, Safety, and Health Manual*, Los Alamos National Laboratory Manual, Chapter 1 (most recent edition).

Revisions or additions to the procedure are marked (▒▒▒▒). Where a section heading is marked, the entire section has been revised.

PREPARATION OF AQUEOUS SAMPLES FOR SPECTROCHEMICAL ANALYSIS—FAAS AND ICP-OES

Analyte: Total suspended and dissolved metals	**Method No.:** WI681 (EPA 200.0, 200.8 and SW846 3010)
Matrix: Water and wastewater	
Procedure: Open beaker digestion with HNO_3 and HCl	
Effective Date: 08/01/93	**Authors:** Richard Robinson Richard Foust

SAFETY NOTE: Before beginning this procedure, read all of the Material Safety Data Sheets for the chemicals listed in Sec. 8. Read Sec. 4.3 of the EM-9 Safety Manual for information on personal protective clothing and equipment. Read Sec. 12 of this procedure for proper waste disposal practices.

1. Principle of Method

The sample is digested with nitric acid and evaporated to low volume. It is then refluxed with hydrochloric acid, cooled, and brought to final volume with ASTM Type I water. The resulting solution is divided into two parts, one for FAAS analysis and the other for ICP-OES analysis.

2. Applicability

2.1. This method is used for the preparation of samples for the determination of total, dissolved, and suspended metals in aqueous samples. It is based on EPA Methods 200.0 and 200.8 and SW 846 Method 3010, and is approved for NPDES samples.

2.2. Samples prepared by this method may be analyzed by FAAS or ICP-OES, using the methods listed in Table I. The metals for which the method is applicable are listed in Table I.

3. Definitions

3.1. Laboratory control standard (LCS). An aliquot of laboratory reagent water to which known quantities of the method analytes are added in the laboratory.

3.2. Matrix spike. A matrix spike analysis is performed by adding a predetermined quantity of stock solutions of certain analytes to a sample matrix before sample digestion and analysis. The concentration of the spike should be at the regulatory standard level or the practical quantitation limit for the method. No

spike of the analyte is necessary when the concentration of the analyte in the sample is greater than 0.1%.

3.3. Laboratory process blank. An aliquot of reagent water that is treated exactly as a sample, including exposure to all glassware, equipment, reagents, and acids that are used with other samples.

3.4. Quality control sample (QCS). A solution of target analytes of known concentration used to fortify an aliquot of LCS matrix. The QCS is obtained from a source outside the laboratory and is used to check laboratory performance.

3.5. Sample duplicate. Duplicate samples are two separate samples taken from the same source (i.e., sample containers) and processed and analyzed independently.

3.6. Dissolved metal concentration. The concentration of metal in an aqueous sample that will pass through a 0.45-μm membrane filter assembly, before sample acidification.

3.7. Suspended metal concentration. The concentration of metal(s) in an aqueous sample that will not pass through a 0.45-μm membrane filter assembly, before sample acidification.

3.8. Total metal concentration. The concentration of metal(s) in an unfiltered aqueous sample, as determined after vigorous acid digestion, or the sum of the concentrations of dissolved and suspended metal(s).

4. Quality Control

4.1. Four laboratory control samples are processed and analyzed with each batch of 20 samples.

4.1.1. A laboratory process blank is carried throughout the entire digestion and is analyzed with each batch of 20 samples.

4.1.2. A laboratory control standard is processed and analyzed with each batch of 20 samples.

4.1.3. A sample duplicate is processed and analyzed with each batch of 20 samples.

4.1.4. A matrix spike is processed and analyzed with each batch of 20 samples.

5. Collection, Preservation, and Storage of Samples

5.1. For the determination of total metals, acidify the sample with 1:1 high-purity HNO_3 to pH < 2.0 at the time of collection.

5.1.1. Store the sample in precleaned linear polyethylene or Teflon bottles.

5.1.2. Do not filter the sample before processing.

5.1.3. Complete the analysis within 6 months.

5.2. For the determination of dissolved metals, filter the sample through a 0.45-μm membrane filter as soon as practical after collection.

5.2.1. Use the first 50-100 mL of the sample to rinse the filter flask. Discard this portion and collect the required volume of filtrate.

5.2.2. Acidify the filtrate with 1:1 high-purity HNO_3 to pH < 2.0.

5.2.3. Store the sample in precleaned linear polyethylene or Teflon bottles.

5.2.4. Complete the analysis within 6 months.

6. Interferences

6.1. Contamination and loss are prime considerations when preparing samples for trace metal analysis. Potential contamination sources include improperly cleaned laboratory apparatus and general contamination in the laboratory environment. A clean laboratory work area designated for trace-element sample handling must be used.

6.2. Sample containers can introduce positive and negative errors in the determination of trace elements by (1) contributing contaminants through surface desorption or leaching or (2) depleting element concentrations through adsorption processes.

7. Apparatus

7.1. Clean all reusable labware (glass, quartz, polyethylene, Teflon, etc.) thoroughly before use. Test disposable labware for contamination before use.

7.2. Labware should be soaked overnight and thoroughly washed with laboratory-grade detergent and water, rinsed with water and soaked 4 h in a mixture of dilute nitric and hydrochloric acids, followed by rinsing with ASTM Type I water and oven drying.

NOTE: Do not use chromic acid for cleaning glassware.

7.3. Balance: Analytical, capable of accurately weighing to ± 0.1 mg.

7.4. Beakers: Griffin, borosilicate glass or Teflon, 100- or 150-mL.

7.5. Centrifuge tubes: Clear polypropylene, 50-mL, with flat top cap.

7.6. Filter unit: Nalgene sterilization filter unit, 0.45-μm, 115-mL, or equivalent.

7.7. Graduated cylinders.

7.8. Hot plate: Thermolyne 2200 or equivalent, capable of maintaining temperature to ± 5°C.

7.9. Micropipettes: Rainin or equivalent, various sizes.

7.10. Volumetric flasks: assorted sizes.

7.11. Wash bottle: one-piece stem, polyethylene, with screw closure, 500-mL.

7.12. Watch glasses: Borosilicate glass or Teflon, 2- and 3-in.

8. Reagents

8.1. ASTM Type I water.

8.2. Nitric acid (concentrated, high-purity). SeaStar, Baker Ultrex, or equivalent.

8.3. Hydrochloric acid (concentrated, high-purity). SeaStar, Baker Ultrex, or equivalent.

8.4. Hydrochloric acid (1:1). Dilute 500 mL high-purity HCl to 1.0 L with ASTM Type I water.

9. Calibration and Standards

9.1. Micropipettes are calibrated quarterly at 10%, 50% and 100% of maximum volume. Results of calibration should be recorded in a laboratory notebook.

9.2. The analytical balance is calibrated regularly. An instrument accuracy check is performed annually by an agency outside the Inorganic Analysis section.

10. Procedure

10.1. Transfer a 100-mL representative aliquot of the well-mixed sample to a 150-mL Griffin beaker and add 3 mL of high-purity concentrated HNO_3. Cover the beaker with a watch glass.

10.2. Place the beaker on a hot plate and cautiously evaporate to a low volume (approximately 5 mL), making certain that the sample does not boil and that no portion of the bottom of the beaker is allowed to go dry.

10.3. Cool the beaker and add another 3-mL portion of high-purity concentrated HNO_3. Cover the beaker and return it to the hot plate, allowing the sample to reflux for 1 h.

10.4. Remove the watch glass after 1 h and examine the digestate for reaction completeness. Digestion is complete if the sample is light in color, or the appearance does not change with continued refluxing. If the digestion is not complete, repeat step 10.3 as necessary.

10.5. When the digestion is complete, remove the watch glass and allow the sample to evaporate to approximately 3 mL. Do not allow any portion of the beaker bottom to go dry. If this occurs, the sample must be redigested.

10.6. Cool the beaker and add 10 mL of 1:1 HCl. Return the beaker to the warm hot plate for 15 min to dissolve any precipitate or residue.

10.7. Rinse the beaker walls and watch glass with ASTM Type I water and, when necessary, filter the sample with the Nalgene filter apparatus to remove any undissolved material.

10.8. Rinse the filter several times with 10-15 mL portions of ASTM Type I water, and bring the final volume to 100 mL with ASTM Type I water.

10.9. Swirl the solution until it is homogeneous.

10.10. Label two centrifuge tubes with the sample number and pour approximately equal 50-mL volumes into the centrifuge tubes. One tube will be for FAAS analysis and the other will be for ICP-OES analysis.

10.11. The sample is now ready for spectrochemical analysis.

11. Calculations

11.1. There are no calculations for samples run directly by FAAS or by ICP-OES.

11.2. Samples that are diluted by the instrument operator must be corrected by applying the correct dilution factor before the results are reported.

12. Proper Waste Disposal Practices

12.1. Solid waste.

12.1.1. If a solid waste is generated that may be contaminated at a level of concern, the appropriate paperwork is completed on a case-by-case basis.

12.1.2. Complete a Waste Profile Request Form (WPRF) describing the solid waste and send to the Waste Management group for review.

12.1.3. If the Waste Management group determines that the hazardous or radioactive components of the solid waste are below the level of concern, dispose of the waste as ordinary laboratory trash.

12.1.4. If the Waste Management group determines that the solid waste is hazardous or radioactive, request pickup of the contaminated waste as described in Section 12.3.

12.2. Liquid waste.

12.2.1. Accumulate liquid waste containing hazardous contaminants, such as solutions of trace metals, in a glass jar in a secondary containment tray and keep segregated from liquid waste contaminated with organic or radioactive substances or cyanide.

12.2.2. Label the bottle with a hazardous waste label and a label indicating its use for trace-metal waste.

12.2.3. Periodically request pickup of the bottle as described in Section 12.3. Keep the bottle in the secondary containment tray until pickup by the Waste Management group.

12.3. Waste pickup.

12.3.1. Request pickup of solid or liquid waste using the current Chemical Waste Disposal Request Form (CWDR). The current Waste Profile Request Form (WPRF) that describes the waste is referenced on the CWDR.

12.3.2. The Waste Management group picks up the waste for disposal in accord with Laboratory policy.

13. Source Material

13.1. "Test Methods for Evaluation of Solid Waste: Laboratory Manual of Physical and Chemical Methods," EPA Report No. SW-846 (November 1986).

13.2. U.S. Environmental Protection Agency, "Methods for Chemical Analysis of Water and Wastes," EPA-600/4-79-020 (rev. March 1983).

13.3. U.S. Environmental Protection Agency, "Methods for the Determination of Metals in Environmental Samples," EPA-600 4-91/010 (June 1991).

13.4. Wagner, R. E. and Yogis, G. A. *Guide to Environmental Analytical Methods*, Genium Publishing Corp., Schenectady, N. Y. (1992).

TABLE I. EPA METHODS BY WHICH SAMPLES PREPARED WITH THIS PROCEDURE MAY BE ANALYZED.

	FAAS Methods		ICP-OES Methods	
Analyte	EPA 200 Series	SW-846 7000 Series	EPA 200 Series	SW-846 6000 Series
Aluminum	202.1	7020	200.7	6010
Arsenic	—	—	200.7	6010
Barium	208.1	7080	200.7	6010
Beryllium	210.1	7090	200.7	6010
Cadmium	213.1	7130	200.7	6010
Calcium	215.1	7140	200.7	6010
Chromium	218.1	7190	200.7	6010
Cobalt	219.1	7200	200.7	6010
Copper	220.1	7210	200.7	6010
Iron	236.1	7380	200.7	6010
Lead	239.1	7420	200.7	6010
Magnesium	242.1	7450	200.7	6010
Manganese	243.1	7460	200.7	6010
Molybdenum	246.1	7480	200.7	6010
Nickel	249.1	7520	200.7	6010
Potassium	258.1	7610	200.7	6010
Selenium	—	—	200.7	6010
Sodium	273.1	7770	200.7	6010
Thallium	279.1	7840	200.7	6010
Vanadium	286.1	7910	200.7	6010
Zinc	289.1	7950	200.7	6010

PREPARATION OF AQUEOUS SAMPLES FOR SPECTROCHEMICAL ANALYSIS— GFAAS AND ICP-MS

Analyte: Total, suspended, and dissolved metals	**Method No.:** WI685 (EPA 200.0, 200.8 and SW846 3020)
Matrix: Water and wastewater	
Procedure: Open beaker digestion with HNO_3	
Effective Date: 08/01/93	**Authors:** Richard Robinson Richard Foust

SAFETY NOTE: Before beginning this procedure, read all of the Material Safety Data Sheets for the chemicals listed in Sec. 8. Read Sec. 4.3 of the EM-9 Safety Manual for information on personal protective clothing and equipment. Read Sec. 12 of this procedure for proper waste disposal practices.

1. Principle of Method

The sample is digested with nitric acid and evaporated to low volume. It is then cooled and brought to final volume with ASTM Type I water. The resulting solution is divided into two parts, one for GFAAS analysis and the other for ICP-MS analysis.

2. Applicability

2.1. This method is used for the preparation of samples for the determination of total, dissolved, and suspended metals in aqueous samples. It is based on EPA Methods 200.0 and 200.8 and SW 846 Method 3020, and is approved for NPDES samples.

2.2. Samples prepared by this method may be analyzed by GFAAS or ICP-MS, using the methods listed in Table I. The metals for which the method is applicable are listed in Table I.

3. Definitions

3.1. Laboratory control standard (LCS). An aliquot of laboratory reagent water to which known quantities of the method analytes are added in the laboratory.

3.2. Matrix spike. A matrix spike analysis is performed by adding a predetermined quantity of stock solutions of certain analytes to a sample matrix prior to sample digestion and analysis. The concentration of the spike should be at the regulatory standard level or the practical quantitation limit for the method. No

spike of the analyte is necessary when the concentration of the analyte in the sample is greater than 0.1%.

3.3. Laboratory process blank. An aliquot of reagent water that is treated exactly as a sample including exposure to all glassware, equipment, reagents, and acids that are used with other samples.

3.4. Quality control sample (QCS). A solution of target analytes of known concentration used to fortify an aliquot of LCS matrix. The QCS is obtained from a source outside to the laboratory and is used to check laboratory performance.

3.5. Sample duplicate. Duplicate samples are two separate samples taken from the same source (i.e., sample containers) and processed and analyzed independently.

3.6. Dissolved metal concentration. The concentration of metal in an aqueous sample that will pass through a 0.45-μm membrane filter assembly, before sample acidification.

3.7. Suspended metal concentration. The concentration of metal(s) in an aqueous sample that will not pass through a 0.45-μm membrane filter assembly, before sample acidification.

3.8. Total metal concentration. The concentration of metal(s) in an unfiltered aqueous sample, as determined after vigorous acid digestion, or the sum of the concentrations of dissolved and suspended metal(s).

4. Quality Control

4.1. Four laboratory control samples are processed and analyzed with each batch of 20 samples.

4.1.1. A laboratory process blank is carried throughout the entire digestion and analyzed with each batch of 20 samples.

4.1.2. A laboratory control standard is processed and analyzed with each batch of 20 samples.

4.1.3. A sample duplicate is processed and analyzed with each batch of 20 samples.

4.1.4. A matrix spike is processed and analyzed with each batch of 20 samples.

5. Collection, Preservation, and Storage of Samples

5.1. For the determination of total metals, acidify the sample with 1:1 high-purity HNO_3 to pH < 2.0 at the time of collection.

5.1.1. Store the sample in precleaned linear polyethylene or Teflon bottles.

5.1.2. Do not filter the sample before processing.

5.1.3. Complete the analysis within 6 months.

5.2. For the determination of dissolved metals, filter the sample through a 0.45-μm membrane filter as soon as practical after collection.

5.2.1. Use the first 50-100 mL of the sample to rinse the filter flask. Discard this portion and collect the required volume of filtrate.

5.2.2. Acidify the filtrate with 1:1 high-purity HNO_3 to pH < 2.0.

5.2.3. Store the sample in precleaned linear polyethylene or Teflon bottles.

5.2.4. Complete the analysis within 6 months.

6. Interferences

6.1. Contamination and loss are prime considerations when preparing samples for trace metal analysis. Potential contamination sources include improperly cleaned laboratory apparatus and general contamination in the laboratory environment. A clean laboratory work area designated for trace-element sample handling must be used.

6.2. Sample containers can introduce positive and negative errors in the determination of trace elements by (1) contributing contaminants through surface desorption or leaching or (2) depleting element concentrations through adsorption processes.

7. Apparatus

7.1. Clean all reusable labware (glass, quartz, polyethylene, Teflon, etc.) thoroughly before use. Test disposable labware for contamination before use.

7.2. Labware should be soaked overnight and thoroughly washed with laboratory-grade detergent and water, rinsed with water, and soaked 4 h in a mixture of dilute nitric and hydrochloric acids, followed by rinsing with ASTM Type I water and oven drying.

NOTE: Do not use chromic acid for cleaning glassware.

7.3. Balance: Analytical, capable of accurately weighing to ± 0.1 mg.

7.4. Beakers: Griffin, borosilicate glass or Teflon, 100- or 150-mL.

7.5. Centrifuge tubes: Clear polypropylene, 50-mL, with flat top cap.

7.6. Filter unit: Nalgene sterilization filter unit, 0.45-μm, 115-mL, or equivalent.

7.7. Graduated cylinders.

7.8. Hot plate: Thermolyne 2200 or equivalent, capable of maintaining temperature to ± 5°C.

7.9. Micropipettes: Rainin or equivalent, various sizes.

7.10. Volumetric flasks: assorted sizes.

7.11. Wash bottle: one-piece stem, polyethylene, with screw closure, 500-mL.

7.12. Watch glass: Borosilicate glass or Teflon, 2.5- and 3-in.

8. Reagents

8.1. ASTM Type I water.

8.2. Nitric acid (concentrated, high-purity). SeaStar, Baker Ultrex, or equivalent.

9. Calibration and Standards

9.1. Micropipettes are calibrated quarterly at 10%, 50%, and 100% of maximum volume. Results of calibration should be recorded in a laboratory notebook.

9.2. The analytical balance is calibrated regularly. An instrument accuracy check is performed annually by an agency outside the Inorganic Analysis section.

10. Procedure

10.1. Transfer a 100-mL representative aliquot of the well-mixed sample to a 150-mL Griffin beaker and add 3 mL of high-purity concentrated HNO_3. Cover the beaker with a watch glass.

10.2. Place the beaker on a hot plate and cautiously evaporate the sample to a low volume (approximately 5 mL), making certain that the sample does not boil and that no portion of the bottom of the beaker is allowed to go dry.

10.3. Cool the beaker and add another 3-mL portion of high-purity concentrated HNO_3. Cover the beaker and return it to the hot plate, allowing the sample to reflux for 1 h.

10.4. Remove the watch glass after 1 h and examine the digestate for reaction completeness. Digestion is complete if the sample is light in color, or the

appearance does not change with continued refluxing. If the digestion is not complete, repeat step 10.3 as necessary.

10.5. When the digestion is complete, remove the watch glass and allow the sample to evaporate to approximately 3 mL. Do not allow any portion of the beaker bottom to go dry. If this occurs, the sample must be redigested.

10.6. Cool the beaker and add 10 mL of ASTM Type I water. Return the beaker to the warm hot plate for 15 min to dissolve any precipitate or residue.

10.7. Rinse the beaker walls and watch glass with ASTM Type I water and, if necessary, filter the sample with the Nalgene filter apparatus to remove any undissolved material.

10.8. Rinse the filter several times with 10-15 mL portions of ASTM Type I water, and bring the final volume to 100 mL with ASTM Type I water. Record the final sample volume in the log book.

10.9. Swirl the solution until it is homogeneous.

10.10. Label two centrifuge tubes with the sample number and pour approximately equal 50-mL volumes into the centrifuge tubes. One tube will be for GFAAS analysis and the other will be for ICP-MS analysis.

10.11. The diluted digestate contains approximately 3-5% (v/v) HNO_3 and is now ready for spectrochemical analysis. Withdraw aliquots of appropriate volume and add any required matrix modifier or reagent before analysis.

11. Calculations

11.1. There are no calculations for samples run directly by GFAAS or by ICP-MS.

11.2. Samples that are diluted by the instrument operator must be corrected by applying the correct dilution factor before the results are reported.

12. Proper Waste Disposal Practices

12.1 Solid waste.

12.1.1. If a solid waste is generated that may be contaminated at a level of concern, the appropriate paperwork is completed on a case-by-case basis.

12.1.2. Complete a Waste Profile Request Form (WPRF) describing the solid waste and send to the Waste Management group for review.

12.1.3. If the Waste Management group determines that the hazardous or radioactive components of the solid waste are below the level of concern, dispose of the waste as ordinary laboratory trash.

12.1.4. If the Waste Management group determines that the solid waste is hazardous or radioactive, request pickup of the contaminated waste as described in Section 12.3.

12.2. Liquid waste.

12.2.1. Accumulate liquid waste containing hazardous contaminants, such as solutions of trace metals, in a glass jar in a secondary containment tray and keep segregated from liquid waste contaminated with organic or radioactive substances or cyanide.

12.2.2. Label the bottle with a hazardous waste label and a label indicating its use for trace-metal waste.

12.2.3. Periodically request pickup of the bottle as described in Section 12.3. Keep the bottle in the secondary containment tray until pickup by the Waste Management group.

12.3. Waste pickup.

12.3.1. Request pickup of solid or liquid waste using the current Chemical Waste Disposal Request Form (CWDR). The current Waste Profile Request Form (WPRF) that describes the waste is referenced on the CWDR.

12.3.2. The Waste Management group picks up the waste for disposal in accord with Laboratory policy.

13. Source Material

13.1. "Test Methods for Evaluation of Solid Waste: Laboratory Manual of Physical and Chemical Methods," EPA Report No. SW-846 (November 1986).

13.2. U.S. Environmental Protection Agency, "Methods for Chemical Analysis of Water and Wastes," EPA-600/4-79-020 (rev. March 1983).

13.3. U.S. Environmental Protection Agency, "Methods for the Determination of Metals in Environmental Samples," EPA-600 4-91/010 (June 1991).

13.4. Wagner, R. E. and Yogis, G. A. *Guide to Environmental Analytical Methods*, Genium Publishing Corp., Schenectady, N. Y. (1992).

TABLE I. EPA METHODS BY WHICH SAMPLES PREPARED WITH THIS PROCEDURE MAY BE ANALYZED.

	FAAS Methods		ICP-OES Methods	
Analyte	EPA 200 Series	SW-846 7000 Series	EPA 200 Series	SW-846 6000 Series
Beryllium	210.2, 200.9	7091	200.8	6020
Cadmium	213.2, 200.9	7131	200.8	6020
Chromium	218.2, 200.9	7191	200.8	6020
Cobalt	219.2, 200.9	7201	200.8	6020
Lead	239.2, 200.9	7221	200.8	—
Molybdenum	246.2	7481	200.8	6020
Thallium	279.2, 200.9	7841	200.8	6020
Vanadium	286.2	7911	200.8	—

PREPARATION OF SEDIMENT, SLUDGE, AND SOIL SAMPLES FOR SPECTROCHEMICAL ANALYSIS—FAAS AND ICP-OES

Analyte: Total metals	**Method No.:** WI690 (EPA 200.0, 200.8 and SW846 3050)
Matrix: Sediments, sludges, and soils	
Procedure: Open-beaker digestion with HNO_3 and HCl and 30% H_2O_2	
Effective Date: 08/01/93	**Authors:** Richard Robinson Richard Foust

SAFETY NOTE: Before beginning this procedure, read all of the Material Safety Data Sheets for the chemicals listed in Sec. 8. Read Sec. 4.3 of the EM-9 Safety Manual for information on personal protective clothing and equipment. Read Sec. 12 of this procedure for proper waste disposal practices.

1. Principle of Method

A sample of sediment, sludge, or soil is digested with nitric acid and hydrogen peroxide, then heated with hydrochloric acid and reduced to a small volume. The sample is cooled and brought to final volume with ASTM Type I water. The resulting solution can be analyzed spectrochemically for various metals.

2. Applicability

2.1. This method is for preparation of samples for the determination of total metals in sediments, soils, and sludges. It is based on EPA Methods 200.0 and 200.8 and SW 846 Method 3050, and is approved for NPDES samples.

2.2. Samples prepared by this method may be analyzed by FAAS or ICP-OES, using the methods listed in Table I. The metals for which the method is applicable are listed in Table I.

3. Definitions

3.1. Laboratory control standard (LCS). An aliquot of laboratory reagent water to which known quantities of the method analytes are added in the laboratory.

3.2. Matrix spike. A matrix spike analysis is performed by adding a predetermined quantity of stock solutions of certain analytes to a sample matrix prior to sample digestion and analysis. The concentration of the spike should be at the regulatory standard level or the practical quantitation limit for the method. No spike of the analyte is necessary when the concentration of the analyte in the sample is greater than 0.1%.

3.3. Laboratory process blank. An aliquot of reagent water that is treated exactly as a sample including exposure to all glassware, equipment, reagents, and acids that are used with other samples.

3.4. Quality control sample (QCS). A solution of target analytes of known concentration used to fortify an aliquot of LCS matrix. The QCS is obtained from a source outside the laboratory and is used to check laboratory performance.

3.5. Sample duplicate. Duplicate samples are two separate samples taken from the same source (i.e., sample containers) and processed and analyzed independently.

3.6. Dissolved metal concentration. The concentration of metal in an aqueous sample that will pass through a 0.45-μm membrane filter assembly, before sample acidification.

3.7. Suspended metal concentration. The concentration of metal(s) in an aqueous sample that will not pass through a 0.45-μm membrane filter assembly, before sample acidification.

3.8. Total metal concentration. The concentration of metal(s) in an unfiltered aqueous sample, as determined after vigorous acid digestion, or the sum of the concentration of dissolved and suspended metal(s).

4. Quality Control

4.1. Four laboratory control samples are processed and analyzed with each batch of 20 samples.

4.1.1. A laboratory process blank is carried throughout the entire digestion and analyzed with each batch of 20 samples.

4.1.2. A laboratory control standard is processed and analyzed with each batch of 20 samples.

4.1.3. A sample duplicate is processed and analyzed with each batch of 20 samples.

4.1.4. A matrix spike is processed and analyzed with each batch of 20 samples.

5. Collection, Preservation, and Storage of Samples

5.1. Prewash all sample containers with detergents, acids, and ASTM Type I water. Plastic, glass, and Teflon containers may be used for storing solid samples.

5.2. Solid samples must be at least 200 g in mass.

5.3. Store solid samples at 4°C until analyzed.

6. Interferences

6.1. Contamination and loss are prime considerations when preparing samples for trace metal analysis. Potential contamination sources include improperly cleaned laboratory apparatus and general contamination within the laboratory environment. A clean laboratory work area designated for trace-element sample handling must be used.

6.2. Sample containers can introduce positive and negative errors in the determination of trace elements by (1) contributing contaminants through surface desorption or leaching or (2) depleting element concentrations through adsorption processes.

6.3. Sludge samples can contain diverse matrix types, each of which may present its own analytical challenge. Spiked samples and any relevant standard reference material should be processed to aid in determining whether this method is applicable to a given waste.

7. Apparatus

7.1. Clean all reusable labware (glass, quartz, polyethylene, Teflon, etc.) thoroughly before use. Test disposable labware for contamination before use.

7.2. Labware should be soaked overnight and thoroughly washed with laboratory-grade detergent and water, rinsed with water and soaked 4 h in a mixture of dilute nitric and hydrochloric acids, followed by rinsing with ASTM Type I water and oven drying.

NOTE: Do not use chromic acid for cleaning glassware.

7.3. Balance: Analytical, capable of accurately weighing to ± 0.1 mg.

7.4. Beakers: Griffin, borosilicate glass or Teflon, 100- or 150-mL.

7.5. Balls, shaker: Tungsten carbide, 1/4- or 3/8-in.

7.6. Centrifuge tubes: Clear polypropylene, 50-mL, with flat top cap.

7.7. Filter unit: Nalgene sterilization filter unit, 0.45-μ, 115-mL, or equivalent.

7.8. Graduated cylinders.

7.9. Hot plate: Thermolyne 2200 or equivalent, capable of maintaining temperature to ± 5°C.

7.10. Micropipettes: Rainin or equivalent, various sizes.

7.11. Shaker: Eberbach, reciprocating, No. 6000 or equivalent.

7.12. Volumetric flasks: assorted sizes.

7.13. Wash bottle: one-piece stem, polyethylene, with screw closure, 500-mL.

7.14. Watch glass: Borosilicate glass or Teflon, 2 1/2- and 3-in.

8. Reagents

8.1. ASTM Type I water.

8.2. Hydrochloric acid (concentrated, high-purity). SeaStar, Baker Ultrex, or equivalent.

8.3. Nitric acid (concentrated, high-purity). SeaStar, Baker Ultrex, or equivalent.

8.4. Hydrogen peroxide (ACS reagent-grade, 30%).

9. Calibration and Standards

9.1. Micropipettes are calibrated quarterly at 10%, 50%, and 100% of maximum volume. Results of calibration should be recorded in a laboratory notebook.

9.2. The analytical balance is calibrated regularly. An instrument accuracy check is performed annually by an agency outside the Inorganic Analysis section.

10. Procedure

10.1. Place 5-10 g of sample into a preweighed 125-mL Griffin beaker, and record the weight. Dry the sample at 105°C overnight or until constant weight is reached. Record the dry weight and calculate and record the percent solids.

10.2. Transfer all of the dried sample to a plastic centrifuge tube, add one tungsten carbide shaker ball, and place on a shaker for 1 h at high speed.

10.3. Transfer 0.8 g ± 0.1 g of the sample into a preweighed 125-mL Griffin beaker and record the weight (to the nearest 0.001 g) in the initial weight column of the digestion logbook.

10.4. Add 10 mL of 1:1 HNO_3, mix the slurry, and cover with a watch glass.

10.5. Place the beaker on a hot plate, heat the sample to 95°C, and reflux for 10 to 15 min.

10.6. Allow the sample to cool, add 5 mL of concentrated HNO_3, replace the watch glass, and reflux the sample for an additional 30 min.

10.7. Repeat Step 10.6.

10.8. Remove the watch glass and cautiously evaporate the sample to a low volume (approximately 5 mL), making certain that the sample does not boil and that no portion of the bottom of the beaker is allowed to go dry.

10.9. Cool the beaker and add 2 mL of ASTM Type I water. Cautiously add 3 mL of 30% H_2O_2. Cover the beaker with a watch glass and return the covered beaker to the hot plate. Care must be taken to ensure that losses do not occur due to excessively vigorous effervescence. Heat until the effervescence subsides and allow the beaker to cool.

10.10. Continue to add 30% H_2O_2 in 1-2 mL aliquots, with warming, until the effervescence is minimal. Repeat this process until a total of 10 mL of 30% H_2O_2 has been added to the sample.

10.11. Add 5 mL of high-purity concentrated HCl and 10 mL of ASTM Type I water. Return the covered beaker to the hot plate and heat for an additional 15 min, making certain that the sample does not boil and that no portion of the bottom of the beaker is allowed to go dry.

10.12. Rinse the beaker walls and watch glass with ASTM Type I water and, when necessary, filter the sample with the Nalgene filter apparatus to remove any undissolved material.

10.13. Rinse the filter several times with 10-15 mL portions of ASTM Type I water and bring the final volume to 100 mL with ASTM Type I water. Record the final sample volume in the log book.

10.14. Swirl the solution until it is homogeneous.

10.15. Label two centrifuge tubes with the sample number and pour approximately equal 50-mL volumes into the centrifuge tubes. One tube will be for FAAS analysis and the other will be for ICP-OES analysis.

10.16 The diluted digestate contains approximately 3-5% (v/v) HCl and 3-5% (v/v) HNO_3 and is now ready for spectrochemical analysis. Withdraw aliquots of appropriate volume and add any required matrix modifier or reagent before analysis.

11. Calculations

11.1. Samples diluted by the instrument operator must be corrected by applying the correct dilution factor before the results are calculated and reported.

11.2. The corrected metal concentration, A, is used to calculate metal concentration as follows:

$$\text{Metal Concentration, } \mu g/g = \frac{(A - B)}{C} ,$$

where A = metal concentration reported from spectrometer, after dilution correction (μg/mL),
B = volume of diluted digestate (mL), and
C = mass of sample used (g).

11.3. Samples digested without drying must be corrected for percent moisture as follows:

$$\text{Metal Concentration, } \mu g/g = U \times \frac{W}{C} ,$$

where U = metal concentration reported as wet weight (μg/g),
W = wet weight of the sample (g), and
C = dry weight of sample (g).

12. Proper Waste Disposal Practices

12.1. Solid waste.

12.1.1. If a solid waste is generated that may be contaminated at a level of concern, the appropriate paperwork is completed on a case-by-case basis.

12.1.2. Complete a Waste Profile Request Form (WPRF) describing the solid waste and send to the Waste Management group for review.

12.1.3. If the Waste Management group determines that the hazardous or radioactive components of the solid waste are below the level of concern, dispose of the waste as ordinary laboratory trash.

12.1.4. If the Waste Management group determines that the solid waste is hazardous or radioactive, request pickup of the contaminated waste as described in Section 12.3.

12.2. Liquid waste.

12.2.1. Accumulate liquid waste containing hazardous contaminants, such as solutions of trace metals, in a glass jar in a secondary containment tray and keep segregated from liquid waste contaminated with organic or radioactive substances or cyanide.

12.2.2. Label the bottle with a hazardous waste label and a label indicating its use for trace-metal waste.

12.2.3. Periodically request pickup of the bottle as described in Section 12.3. Keep the bottle in the secondary containment tray until pickup by the Waste Management group.

12.3. Waste pickup.

12.3.1. Request pickup of solid or liquid waste using the current Chemical Waste Disposal Request Form (CWDR). The current Waste Profile Request Form (WPRF) that describes the waste is referenced on the CWDR.

12.3.2. The Waste Management group picks up the waste for disposal in accord with Laboratory policy.

13. Source Material

13.1. "Test Methods for Evaluation of Solid Waste: Laboratory Manual of Physical and Chemical Methods," EPA Report No. SW-846 (November 1986).

13.2. U.S. Environmental Protection Agency, "Methods for Chemical Analysis of Water and Wastes," EPA-600/4-79-020 (rev. March 1983).

13.3. U.S. Environmental Protection Agency, "Methods for the Determination of Metals in Environmental Samples," EPA-600 4-91/010 (June 1991).

13.4. Wagner, R. E. and Yogis, G. A. *Guide to Environmental Analytical Methods*, Genium Publishing Corp., Schenectady, N. Y. (1992).

TABLE I. EPA METHODS BY WHICH SAMPLES PREPARED WITH THIS PROCEDURE MAY BE ANALYZED.

	FAAS Methods		ICP-OES Methods	
Analyte	EPA 200 Series	SW-846 7000 Series	EPA 200 Series	SW-846 6000 Series
Aluminum	202.1	7020	200.7	6010
Arsenic	—	—	200.7	6010
Barium	208.1	7080	200.7	6010
Beryllium	210.1	7090	200.7	6010
Cadmium	213.1	7130	200.7	6010
Calcium	215.1	7140	200.7	6010
Chromium	218.1	7190	200.7	6010
Cobalt	219.1	7200	200.7	6010
Copper	220.1	7210	200.7	6010
Iron	236.1	7380	200.7	6010
Lead	239.1	7420	200.7	6010
Magnesium	242.1	7450	200.7	6010
Manganese	243.1	7460	200.7	6010
Molybdenum	246.1	7480	200.7	6010
Nickel	249.1	7520	200.7	6010
Potassium	258.1	7610	200.7	6010
Selenium	—	—	200.7	6010
Sodium	273.1	7770	200.7	6010
Thallium	279.1	7840	200.7	6010
Vanadium	286.1	7910	200.7	6010
Zinc	289.1	7950	200.7	6010

PREPARATION OF SEDIMENT, SLUDGE, AND SOIL SAMPLES FOR SPECTROCHEMICAL ANALYSIS—GFAAS AND ICP-MS

Analyte: Total metals	**Method No.:** WI691 (EPA 200.0, 200.8 and SW846 3050)
Matrix: Sediments, sludges and soils	
Procedure: Open-beaker digestion with HNO_3 and 30% H_2O_2	
Effective Date: 08/01/93	**Authors:** Richard Robinson Richard Foust

SAFETY NOTE: Before beginning this procedure, read all of the Material Safety Data Sheets for the chemicals listed in Sec. 8. Read Sec. 4.3 of the EM-9 Safety Manual for information on personal protective clothing and equipment. Read Sec. 12 of this procedure for proper waste disposal practices.

1. Principle of Method

A sample of sediment, sludge, or soil is digested with nitric acid and hydrogen peroxide, then cooled and brought to final volume with ASTM Type I water. The resulting solution is divided into two equal parts, one for GFAAS analysis and the other for ICP-MS analysis.

2. Applicability

2.1. This method is for preparation of samples for the determination of total metals in sediments, soils, and sludges. It is based on EPA Methods 200.0 and 200.8 and SW 846 Method 3050, and is approved for NPDES samples.

2.2. Samples prepared by this method may be analyzed for GFAAS or ICP-MS, using the methods listed in Table I. The metals for which the method is applicable are listed in Table I.

3. Definitions

3.1. Laboratory control standard (LCS). An aliquot of laboratory reagent water to which known quantities of the method analytes are added in the laboratory.

3.2. Matrix spike. A matrix spike analysis is performed by adding a predetermined quantity of stock solutions of certain analytes to a sample matrix before sample digestion and analysis. The concentration of the spike should be at the regulatory standard level or the practical quantitation limit for the method. No spike of the analyte is necessary when the concentration of the analyte in the sample is greater than 0.1%.

3.3. Laboratory process blank. An aliquot of reagent water that is treated exactly as a sample including exposure to all glassware, equipment, reagents, and acids that are used with other samples.

3.4. Quality control sample (QCS). A solution of target analytes of known concentration used to fortify an aliquot of LCS matrix. The QCS is obtained from a source outside to the laboratory and is used to check laboratory performance.

3.5. Sample duplicate. Duplicate samples are two separate samples taken from the same source (i.e., sample containers) and processed and analyzed independently.

3.6. Dissolved metal concentration. The concentration of metal in an aqueous sample that will pass through a 0.45-μm membrane filter assembly, before sample acidification.

3.7. Suspended metal concentration. The concentration of metal(s) in an aqueous sample that will not pass through a 0.45-μm membrane filter assembly, before sample acidification.

3.8. Total metal concentration. The concentration of metal(s) in an unfiltered aqueous sample, as determined after vigorous acid digestion, or the sum of the concentrations of dissolved and suspended metal(s).

4. Quality Control

4.1. Four laboratory control samples are processed and analyzed with each batch of 20 samples.

4.1.1. A laboratory process blank is carried throughout the entire digestion and analyzed with each batch of 20 samples.

4.1.2. A laboratory control standard is processed and analyzed with each batch of 20 samples.

4.1.3. A sample duplicate is processed and analyzed with each batch of 20 samples.

4.1.4. A matrix spike is processed and analyzed with each batch of 20 samples.

5. Collection, Preservation, and Storage of Samples

5.1. Prewash all sample containers with detergents, acids, and ASTM Type I water. Plastic, glass, and Teflon containers may be used for storing solid samples.

5.2. Solid samples must be at least 200 g in mass.

5.3. Store solid samples at 4°C until analyzed.

6. Interferences

6.1. Contamination and loss are prime considerations when preparing samples for trace metal analysis. Potential contamination sources include improperly cleaned laboratory apparatus and general contamination within the laboratory environment. A clean laboratory work area designated for trace-element sample handling must be used.

6.2. Sample containers can introduce positive and negative errors in the determination of trace elements by (1) contributing contaminants through surface desorption or leaching or (2) depleting element concentrations through adsorption processes.

6.3. Sludge samples can contain diverse matrix types, each of which may present its own analytical challenge. Spiked samples and any relevant standard reference material should be processed to aid in determining whether this method is applicable to a given waste.

7. Apparatus

7.1. Clean all reusable labware (glass, quartz, polyethylene, Teflon, etc.) thoroughly before use. Test disposable labware for contamination before use.

7.2. Labware should be soaked overnight and thoroughly washed with laboratory-grade detergent and water, rinsed with water and soaked 4 h in a mixture of dilute nitric and hydrochloric acids, followed by rinsing with ASTM Type I water and oven drying.

NOTE: Do not use chromic acid for cleaning glassware.

7.3. Balance: Analytical, capable of accurately weighing to ± 0.1 mg.

7.4. Beakers: Griffin, borosilicate glass or Teflon, 100- or 150-mL.

7.5. Balls, shaker: Tungsten carbide, 1/4- or 3/8-in.

7.6. Centrifuge tubes: Clear polypropylene, 50-mL, with flat top cap.

7.7. Filter unit: Nalgene sterilization filter unit, 0.45-μm, 115-mL, or equivalent.

7.8. Graduated cylinders.

7.9. Hot plate: Thermolyne 2200 or equivalent, capable of maintaining temperature to ±5°C.

7.10. Micropipettes: Rainin or equivalent, various sizes.

7.11. Shaker: Eberbach, reciprocating, No. 6000 or equivalent.

7.12. Volumetric flasks: assorted sizes.

7.13. Wash bottle: one-piece stem, polyethylene, with screw closure, 500 mL.

7.14. Watch glasses. Borosilicate glass or Teflon, 2-1/2- and 3-in.

8. Reagents

8.1. ASTM Type I water.

8.2. Nitric acid (concentrated, high-purity). SeaStar, Baker Ultrex, or equivalent.

8.3. Hydrogen peroxide (ACS reagent-grade, 30%).

8.4. Nitric acid (1:1). Dilute 500 mL of high-purity HNO_3 to 1.0 L with ASTM Type I water.

9. Calibration and Standards

9.1. Micropipettes are calibrated quarterly at 10%, 50%, and 100% of maximum volume. Results of calibration should be recorded in a laboratory notebook.

9.2. The analytical balance is calibrated regularly. An instrument accuracy check is performed annually by an agency outside the Inorganic Analysis section.

10. Procedure

10.1. Place 5-10 g of sample into a preweighed 125-mL Griffin beaker and record the weight. Dry the sample at 105°C overnight, or until constant weight is reached. Record the dry weight and calculate and record the percent solids.

10.2. Transfer all the dried sample to a plastic centrifuge tube, add one tungsten carbide shaker ball, and place on a shaker for 1 h at high speed.

10.3. Transfer 0.8 g ± 0.1 g of the sample into a preweighed 125-mL Griffin beaker and record the weight (to the nearest 0.001 g) in the initial weight column of the digestion logbook.

10.4. Add 10 mL of 1:1 HNO_3, mix the slurry, and cover with a watch glass.

10.5. Place the beaker on a hot plate, heat the sample to 95°C, and reflux for 10 to 15 min.

10.6. Allow the sample to cool and add 5 mL of concentrated high-purity HNO_3. Replace the watch glass and reflux the sample for an additional 30 min.

10.7. Repeat step 10.6.

10.8. Remove the watch glass and cautiously evaporate the sample to a low volume (approximately 5 mL), making certain that the sample does not boil and that no portion of the bottom of the beaker is allowed to go dry.

10.9. Cool the beaker and add 2 mL of ASTM Type I water. Cautiously add 3 mL of 30% H_2O_2. Cover the beaker with a watch glass and return the covered beaker to the hot plate. Care must be taken to ensure that losses do not occur due to excessively vigorous effervescence. Heat until the effervescence subsides and allow the beaker to cool.

10.10. Continue to add 30% H_2O_2 in 1-2 mL aliquots, with warming, until the effervescence is minimal. Repeat this process until 10 mL total volume of 30% H_2O_2 has been added to the sample.

10.11. Return the beaker containing the HNO_3-H_2O_2 digestate to the hot plate and cautiously evaporate to a low volume (approximately 5 mL), making certain that the sample does not boil and that no portion of the bottom of the beaker is allowed to go dry.

10.12. Rinse the beaker walls and watch glass with ASTM Type I water and, if necessary, filter the sample with the Nalgene filter apparatus to remove any undissolved material.

10.13. Rinse the filter several times with 10-15 mL portions of ASTM Type I water and bring the final volume to 100 mL with ASTM Type I water. Record the final sample volume in the log book.

10.14. Swirl the solution until it is homogeneous.

10.15. Label two centrifuge tubes with the sample number and pour approximately equal 50-mL volumes into the centrifuge tubes. One tube will be for GFAAS analysis and the other will be for ICP-MS analysis.

10.16. The diluted digestate contains approximately 3-5% (v/v) HNO_3 and is now ready for spectrochemical analysis. Withdraw aliquots of appropriate volume and add any required matrix modifier or reagent before analysis.

11. Calculations

11.1. Samples diluted by the instrument operator must be corrected by applying the correct dilution factor before the results are calculated and reported.

11.2. The corrected metal concentration, A, is used to calculate metal concentration as follows:

$$\text{Metal Concentration, } \mu g/g = \frac{(A \times B)}{C} ,$$

where A = metal concentration reported from spectrometer, after dilution correction (μg/mL),
B = volume of diluted digestate (mL), and
C = mass of sample used (g).

11.3. Samples digested without drying must be corrected for percent moisture as follows:

$$\text{Metal Concentration, } \mu g/g = U \times \frac{W}{C} ,$$

where U = metal concentration reported as wet weight (μg/g),
W = wet weight of the sample (g), and
C = dry weight of sample (g).

12. Proper Waste Disposal Practices

12.1. Solid waste.

12.1.1. If a solid waste is generated that may be contaminated at a level of concern, the appropriate paperwork is completed on a case-by-case basis.

12.1.2. Complete a Waste Profile Request Form (WPRF) describing the solid waste and send to the Waste Management group for review.

12.1.3. If the Waste Management group determines that the hazardous or radioactive components of the solid waste are below the level of concern, dispose of the waste as ordinary laboratory trash.

12.1.4. If the Waste Management group determines that the solid waste is hazardous or radioactive, request pickup of the contaminated waste as described in Section 12.3.

12.2. Liquid waste.

12.2.1. Accumulate liquid waste containing hazardous contaminants, such as solutions of trace metals, in a glass jar in a secondary containment tray

and keep segregated from liquid waste contaminated with organic or radioactive substances or cyanide.

12.2.2. Label the bottle with a hazardous waste label and a label indicating its use for trace-metal waste.

12.2.3. Periodically request pickup of the bottle as described in Section 12.3. Keep the bottle in the secondary containment tray until pickup by the Waste Management group.

12.3. Waste pickup.

12.3.1. Request pickup of solid or liquid waste using the current Chemical Waste Disposal Request Form (CWDR). The current Waste Profile Request Form (WPRF) that describes the waste is referenced on the CWDR.

12.3.2. The Waste Management group picks up the waste for disposal in accord with Laboratory policy.

13. Source Material

13.1. "Test Methods for Evaluation of Solid Waste: Laboratory Manual of Physical and Chemical Methods," EPA Report No. SW-846 (November 1986).

13.2. U.S. Environmental Protection Agency, "Methods for Chemical Analysis of Water and Wastes," EPA-600/4-79-020 (rev. March 1983).

13.3. U.S. Environmental Protection Agency, "Methods for the Determination of Metals in Environmental Samples," EPA-600 4-91/010 (June 1991).

13.4. Wagner, R. E. and Yogis, G. A. *Guide to Environmental Analytical Methods*, Genium Publishing Corp., Schenectady, N. Y. (1992).

TABLE I. EPA METHODS BY WHICH SAMPLES PREPARED WITH THIS PROCEDURE MAY BE ANALYZED.

	FAAS Methods		ICP-OES Methods	
Analyte	EPA 200 Series	SW-846 7000 Series	EPA 200 Series	SW-846 6000 Series
Arsenic	206.2, 200.9	7060	200.8	6020
Beryllium	210.2, 200.9	7091	200.8	6020
Cadmium	213.2, 200.9	7131	200.8	6020
Chromium	218.2, 200.9	7191	200.8	6020
Cobalt	219.2, 200.9	7201	200.8	6020
Iron	236.2, 200.9	—	—	6020
Molybdenum	246.2	7481	200.8	—
Selenium	270.2, 200.9	7740	200.8	—
Thallium	279.2, 200.9	7841	200.8	6020
Vanadium	286.2	7911	200.8	—

AMERICIUM-241 IN WASTE WATER — INSTRUMENTAL GAMMA-RAY SPECTROMETRY USING A Ge(Li) DETECTOR

Analyte: Americium-241	**Method No.:** WR100
Matrix: Waste water	**Minimum Detectable Concentration:** 400 pCi/sample
Procedure: Instrumental gamma-ray spectrometry using a Ge(Li) detector	**Accuracy and Precision:** (mean ± 1 sigma) 104% ± 2% at the 30-nCi level
	Acceptable Minimum Detectable Activity: 50 pCi/L
Effective Date: 01/22/86	**Author:** Terry D. Filer

SAFETY NOTE: Before beginning this procedure, read all of the Material Safety Data Sheets for the chemicals listed in Sec. 7. Read Sec. 4.3 of the EM-9 Safety Manual for information on personal protective clothing and equipment. Read Sec. 11 of this procedure and Source Materials 12.3 and 12.4 for proper waste disposal practices.

1. Principle of Method

1.1. Americium-241 activity is determined by instrumental gamma-ray spectrometry using a Ge(Li) detector. Quantitative data are obtained by comparison of the net gamma-ray peak area at 59.5 keV with a standard of known ^{241}Am content.

2. Sensitivity

2.1. Sensitivity is limited by counter background.

2.2. For routine measurements with a 60-min count length and a counting efficiency of approximately 1.3%, the minimum detection limit (three times the standard deviation of the blank) is 400 pCi/sample (Laboratory Notebook A004590, p. 128).

3. Accuracy and Precision

3.1. Precision for waste water samples is primarily limited by the low peak/background ratio. Routinely report waste water results with a minimum of 2% uncertainty. For low-activity samples, report uncertainties based on standard counting statistics whenever they exceed 2%.

3.2. Routine performance data are calculated by dividing the result on each individual QC analysis by the certified value and are summarized by calculating a mean ratio ± 1 standard deviation (std dev).

3.3. The mean value of the ratio of the QC result compared with the certified value is 104% ± 2% (Laboratory Notebook A004590, p. 133).

4. Interferences

4.1. There are no gamma-ray spectral interferences for ^{241}Am.

5. Collection and Storage of Samples

5.1. Soon after collection, acidify water samples to 1% with HNO_3.

5.2. Complete analysis within 6 months.

6. Apparatus

6.1. Graduated cylinder: 500-mL.

6.2. Gamma-ray spectrometer with Ge(Li) detector: EG&G Ortec model 137C P2-2, EG&G Ortec, Oak Ridge, TN.

6.3. Amplifier: Canberra model 2025 AFT, Canberra Industries, Inc., Meriden, CT.

6.4. Personal computer: IBM Corp., Boca Raton, FL.

6.5. Enhanced color display monitor: IBM Corp., Boca Raton, FL.

6.6. Proprinter: IBM Corp., Boca Raton, FL.

6.7. Multichannel analyzer software: EG&G Ortec ACE 4-B1 and ACE 2-B1, EG&G Ortec, Oak Ridge, TN.

6.8. Maestro multichannel analyzer software: EG&G Ortec A63-B2/A63-B4, EG&G Ortec, Oak Ridge, TN.

6.9. Master Library software: EG&G Ortec A53, EG&G Ortec, Oak Ridge, TN.

6.10. Application Manager software: EG&G Ortec A18, EG&G Ortec, Oak Ridge, TN.

6.11. GeLiGam gamma-ray analysis software: EG&G Ortec A30-B1, EG&G Ortec, Oak Ridge, TN.

6.12. Polyethylene bottles: 500-mL, wide-mouth, VWR series 16126.

7. Reagents

7.1. Nitric acid (concentrated, reagent-grade).

8. Calibration and Standards

8.1. Use an ^{241}Am primary standard obtained from Amersham (AMZ.44).

8.2. Determine counter efficiency by a 3600-s count on a 500-mL standard prepared from the Amersham (AMZ.44) primary standard.

8.3. Check detector energy calibration each week with National Institute of Standards and Technology (NIST) Standard Reference Material (SRM) 4213, an ^{241}Am standard.

8.4. Take background counts of 3600 s each week.

8.5. Check QC each week with an ^{241}Am primary standard (AMZ.240) obtained from Amersham (Laboratory Notebook A004590, pp. 115-117).

9. Procedure

9.1. Sample preparation.

9.1.1. Measure 500 mL in a graduated cylinder and pour into a 500-mL plastic bottle.

9.2. Nuclear counting.

9.2.1. Center the 500-mL sample bottle on the face of the Ge(Li) detector.

9.2.2. Accumulate gamma-ray spectra for 3600 s by entering **STARTACQ** at the DOS prompt. See *Application Manager (A18-B1)*, "Examples of Operation," pp. 15-18.

9.2.3. When the sample has completed the counting sequence, enter the following commands after the DOS prompt: **STORE**, **SAMPLE**, **DETECTOR**, **GERPAR**, and **CONVERT**. See *Application Manager (A18-B1)*, "Examples of Operation," p. 27 for **STORE**, pp. 50-51 for **SAMPLE**, pp. 54-57 for **DETECTOR**, pp. 66-76 for **GERPAR**, and pp. 87-88 for **CONVERT**.

10. Calculations

10.1. Calculate the activity of ^{241}Am in waste water using the following formula:

$$A = \frac{(C_s - C_b)}{Y \times E \times CT \times V \times 2200} ,$$

where A = activity (nCi/L),
C_s = gross counts in the ^{241}Am peak,
C_b = background counts,
Y = gamma yield,
E = detector efficiency,
CT = count time (min),
V = volume (L), and
2200 = constant.

10.2. The uncertainty in ^{241}Am activity is calculated from recoveries from seven replicates of NIST traceable materials. The replicates were individually sampled and each carried through the entire sample preparation and measurement process. Uncertainties were calculated as plus or minus the standard deviation of the difference between the true value and its measured value for each replicate. The uncertainty for this procedure was found to be ±2% (Laboratory Notebook A004590, p. 133). For low activity samples, uncertainties are based on standard counting statistics when they exceed 2%.

10.3. Identify the ^{241}Am peak and calculate the net counts under the peak using the procedure described in *GeLiGam (A30-B1) Gamma-Ray Analysis*. Enter the following commands after the DOS prompt: **AN1**, **AN2**, and **RPT**. See pp. 58-61 for **AN1**, pp. 61-62 for **AN2**, and pp. 63-67 for **RPT**.

11. Proper Waste Disposal Practices

11.1. Solid waste.

11.1.1. Radiochemically contaminated waste.

11.1.1.1. Accumulate radiochemically contaminated solid waste, such as paper wipes, plastic pipettes, and plastic bottles, in a metal can which contains a cardboard box lined with a plastic bag. Do not place hazardous waste in this can.

11.1.1.2. Label the can with a radioactive waste label.

11.1.1.3. When the cardboard box is full, remove it from the can, seal with tape, and label as radioactive compactable waste. Store

the waste in the laboratory pending disposal by the Waste Management group.

11.1.1.4. Place a new cardboard box and plastic bag in the waste can for continued use.

11.2. Liquid waste.

11.2.1. Dispose of liquid waste that is contaminated with radionuclides in a sink specifically approved for the disposal of aqueous radioactive waste and inorganic acids and bases.

11.3. Waste pickup.

11.3.1. Radioactively contaminated waste.

11.3.1.1. The surface exposure rate of the sealed box of radiochemically contaminated solid waste is determined by a radiation protection technician and is recorded on the Radioactive Solid Waste Disposal (RSWD) record form.

11.3.1.2. Request pickup by the Waste Management group of a full box of radiochemically contaminated solid waste using the current Chemical Waste Disposal Request (CWDR) form. The current Waste Profile Request Form (WPRF) that describes the waste is referenced on both disposal request forms.

11.3.1.3. The Waste Management group picks up the waste for disposal according to Laboratory policy.

12. Source Material

12.1. *Application Manager (A18-B1)*, "Examples of Operation" (EG&G Ortec, Oak Ridge, Tennessee, 1987).

12.2. *GeLiGam (A30-B1) Gamma-Ray Analysis* (EG&G Ortec, Oak Ridge, Tennessee, 1986).

12.3. "Low-Level Radioactive Solid Waste," Administrative Requirement 10-2, in *Environment, Safety, and Health Manual*, Los Alamos National Laboratory Manual, Chapter 1 (most recent edition).

12.4 "Hazardous and Mixed Waste," Administrative Requirement 10-3, in *Environment, Safety, and Health Manual*, Los Alamos National Laboratory Manual, Chapter 1 (most recent edition).

Revisions or additions to the procedure are marked (▒▒▒▒). Where a section heading is marked, the entire section has been revised.

AMERICIUM-241 IN WASTE WATER AND FILTER CAKE — INSTRUMENTAL GAMMA-RAY SPECTROMETRY USING A NaI DETECTOR

Analyte: Americium-241	**Method No.:** WR110
Matrix: Waste water and filter cake	**Minimum Detectable Concentration:** 27 pCi/sample
Procedure: Instrumental gamma-ray spectrometry using a NaI detector	**Accuracy and Precision:** (mean ± 1 sigma) 99% ± 2% at the 5-nCi level
	Acceptable Minimum Detectable Activity: 50 pCi/L for waste water
Effective Date: 01/17/86	**Author:** Terry D. Filer

SAFETY NOTE: Before beginning this procedure, read all of the Material Safety Data Sheets for the chemicals listed in Sec. 7. Read Sec. 4.3 of the EM-9 Safety Manual for information on personal protective clothing and equipment. Read Sec. 12 of this procedure and Source Materials 13.1 and 13.2 for proper waste disposal practices.

1. Principle of Method

1.1. Americium-241 activity is determined by instrumental gamma-ray spectrometry using a NaI detector. Quantitative data are obtained by comparison of net gamma-ray peak area at 59.5 keV with matrix-based standards of known ^{241}Am content.

2. Sensitivity

2.1. Sensitivity is limited by the counter background.

2.2. For routine measurements with a 10-min count length and a counting efficiency of 27%, the minimum detection limit (three times the standard deviation of the blank) is 27 pCi/sample (Laboratory notebook A09309, p. 132).

3. Accuracy and Precision

3.1. Routine performance data are calculated by dividing the result on each individual QC analysis by its certified value and are summarized by calculating a mean ratio ± 1 standard deviation.

3.2. The mean value of the ratio of the QC result compared with the certified value is 99% ± 2% at the 500-pCi level (Laboratory notebook A09309, p. 133).

4. Interferences

4.1. Interference is caused by nuclides that emit low-energy gamma rays, such as ^{237}Np.

5. Collection and Storage of Samples

5.1. Acidify waste water samples to 1.0% with HNO_3.

5.2. No treatment is given to filter cake samples before analysis.

5.3. Complete analysis within 6 months.

6. Apparatus

6.1. Gamma spectrometer: 4-in.-diam by 6-in., NaI well-type scintillation detector with a Canberra Model No. 40 multichannel analyzer. Canberra Industries, Inc., Meriden, CT.

6.2. Disposable culture tubes: 13- by 100-mm, catalog no. 608 25-924. VWR Scientific, San Francisco, CA.

6.3. K.S.E. glove box: equipped with a Blue M Infra oven and an Ainsworth electronic balance (0.00- to 200.00-g capacity).

7. Reagents

7.1. Hydrofluoric acid (concentrated, 48%, reagent-grade).

7.2. Nitric acid (concentrated, 70%, reagent-grade).

7.3. Nitric acid (12 M) • hydrofluoric acid (1 M). Mix 1536 mL of concentrated HNO_3, 67 mL of concentrated HF, and 401 mL of water. Store in a 2000-mL polyethylene bottle.

7.4. Nitric acid. Dilute 1:1.

8. Calibration and Standards

8.1. Americium-241 standard. The primary ^{241}Am standard is obtained from Amersham (AMZ.44).

8.2. Calibration of the gamma-ray spectrometer with the NaI detector.

8.2.1. Calibrate the NaI detector using the primary ^{241}Am standard.

8.2.2. Take 10-min calibration counts. Determine the efficiency of the NaI detector by integrating the counts in 60 channels (20 channels to the left of the peak and 40 channels to the right of the peak) of the energy spectrum of the ^{241}Am primary standard.

8.2.3. Accumulate 10-min background counts for the energy spectrum for the NaI detector.

9. Procedure

9.1. Waste water samples.

9.1.1. Pipette 2.0 mL of the sample into a 13- by 100-mm test tube.

9.1.2. Clean off any exterior contamination.

9.1.3. Insert the sample into the NaI detector well and count for 10 min.

9.2. Filter cake samples.

9.2.1. Place 0.5 g of dried filter cake into a 150-mL beaker. Dry and weigh the sample in a glove box.

9.2.2. Add 20 mL of 12 M HNO_3 • 1 M HF to the sample, cover with a watch glass, and digest for 20 min on a hot plate.

9.2.3. Remove the sample from the hot plate and carefully decant the supernate into a 100-mL volumetric flask.

9.2.4. Add 20 mL of 12 M HNO_3 • 1 M HF to the remaining residue in the 150-mL beaker. Cover with a watch glass and digest for 20 min on a hot plate.

9.2.5. Remove the sample from the hot plate and carefully decant the supernate into the 100-mL volumetric flask containing the first digestion.

9.2.6. Add 10 mL of 1:1 HNO_3 to the remaining residue in the 150-mL beaker. Cover with a watch glass and digest for 10 min on a hot plate.

9.2.7. Remove the sample from the hot plate and carefully decant the supernate into the 100-mL volumetric flask.

9.2.8. The combined solution from the three digestions is diluted to volume with 1:1 HNO_3.

9.2.9. Pipette 2.0 mL of the digested filter cake into a 13- by 100-mm test tube.

9.2.10. Clean off any exterior contamination.

9.2.11. Insert the sample into the NaI detector well and count for 10 min.

10. Operation of Equipment

10.1. Refer to the operator's manual for the Canberra Model No. 40 multichannel analyzer.

11. Calculations

11.1. Factors and their relative uncertainties in the calculation of ^{241}Am activity are as follows:

Definition	Factor symbol	Value	% Uncertainty
Gross gamma count, sample	C_x	Variable	Variable
Blank count	B	about 40 cpm	5
Counting efficiency	CE	0.27	0.7
Counting time	CT	10 min	0.1
Volume	V	Variable, L or g	3
dpm/nCi	MC	2.22×10^3	0

11.2. Calculate counting efficiency for ^{241}Am using the following formula:

$$CE = \frac{C_s - B}{CT \times A_s} ,$$

where CE = counting efficiency,
C_s = counts of ^{241}Am standard,
B = counts in the blank,
CT = counting time (min), and
A_s = activity of ^{241}Am standard (dpm).

11.3. The standard deviation of the counting efficiency was calculated from the efficiencies measured over a period of several months.

11.4. Americium-241 activity in the sample in nCi/L or nCi/g is calculated using the following equation:

$$Am = \frac{C_x - B}{CT \times CE \times V \times MC} ,$$

where Am = ^{241}Am activity in the sample (nCi/L or nCi/g),
C_x = gross gamma counts of the sample,
B = counts in the blank,
CT = counting time (min),
CE = counting efficiency,
V = sample volume (L) or weight (g), and
MC = 2220.

11.5. The standard deviation in the sample at the 95% confidence level is given by

$$SD = 1.96 \times Am \times \sqrt{\frac{C_x + B}{(C_x - B)^2} + 0.001} ,$$

where SD = standard deviation,
1.96 = constant,
Am = ^{241}Am activity in the sample (nCi/L or nCi/g),
C_x = gross gamma counts of the sample,
B = counts in the blank, and
0.001 = constant.

12. Proper Waste Disposal Practices

12.1. Solid waste.

12.1.1. Radiochemically contaminated waste.

12.1.1.1. Accumulate radiochemically contaminated solid waste, such as paper wipes, plastic pipettes, and plastic bottles, in a metal can which contains a cardboard box lined with a plastic bag. Do not place hazardous waste in this can.

12.1.1.2. Label the can with a radioactive waste label.

12.1.1.3. When the cardboard box is full, remove it from the can, seal with tape, and label as radioactive compactable waste. Store the waste in the laboratory pending disposal by the Waste Management group.

12.1.1.4. Place a new cardboard box and plastic bag in the waste can for continued use.

12.2. Liquid waste.

12.2.1. Dispose of liquid waste that is contaminated with radionuclides in a sink specifically approved for the disposal of aqueous radioactive waste and inorganic acids and bases.

12.3. Waste pickup.

12.3.1. Radioactively contaminated waste.

12.3.1.1. The surface exposure rate of the sealed box of radiochemically contaminated solid waste is determined by a radiation protection technician and is recorded on the Radioactive Solid Waste Disposal (RSWD) record form.

12.3.1.2. Request pickup by the Waste Management Group of a full box of radiochemically contaminated solid waste using the current Chemical Waste Disposal Request (CWDR) form. The current Waste Profile Request Form (WPRF) that describes the waste is referenced on both disposal request forms.

12.3.1.3. The Waste Management group picks up the waste for disposal according to Laboratory policy.

13. Source Material

13.1. "Low-Level Radioactive Solid Waste," Administrative Requirement 10-2, in *Environment, Safety, and Health Manual*, Los Alamos National Laboratory Manual, Chapter 1 (most recent edition).

13.2. "Hazardous and Mixed Waste," Administrative Requirement 10-3, in *Environment, Safety, and Health Manual*, Los Alamos National Laboratory Manual, Chapter 1 (most recent edition).

Revisions or additions to the procedure are marked (▒▒▒▒). Where a section heading is marked, the entire section has been revised.

CESIUM-137 IN WASTE WATER — INSTRUMENTAL GAMMA-RAY SPECTROMETRY USING A Ge(Li) DETECTOR

Analyte: Cesium-137	**Method No.:** WR120
Matrix: Waste water	**Minimum Detectable Concentration:** 225 pCi/sample
Procedure: Instrumental gamma-ray spectrometry using a Ge(Li) detector	**Accuracy and Precision:** (mean ± 1 sigma) 110% ± 2% at the 30-nCi level
	Acceptable Minimum Detectable Activity: 20 nCi/L
Effective Date: 01/21/86	**Author:** Terry D. Filer

SAFETY NOTE: Before beginning this procedure, read all of the Material Safety Data Sheets for the chemicals listed in Sec. 7. Read Sec. 4.3 of the EM-9 Safety Manual for information on personal protective clothing and equipment. Read Sec. 11 of this procedure and Source Materials 12.3 and 12.4 for proper waste disposal practices.

1. Principle of Method

1.1. Cesium-137 is determined by instrumental gamma-ray spectrometry using Ge(Li) detectors. Quantitative data are obtained by comparison of the net gamma-ray peak area at 661 keV with standards of known ^{137}Cs content.

2. Sensitivity

2.1. Sensitivity is limited by counter background.

2.2. For routine measurements with a 60-min count length and a counting efficiency of 0.26%, the minimum detection limit (three times the standard deviation of the blank) is 225 pCi/sample (Laboratory Notebook A004590, p. 129).

3. Accuracy and Precision

3.1. Precision for waste water samples is primarily limited by the low peak/background ratio. Report routine waste water results with a minimum 2% uncertainty. For low-activity samples, report uncertainties based on standard counting statistics whenever they exceed 2%.

3.2. Calculate routine performance data by dividing the result of each individual QC analysis by the certified value and summarize the data by calculating a mean ratio ± 1 standard deviation.

3.3. The mean value of the ratio of the QC result compared with the certified value is 110% ± 2% (Laboratory notebook A004590, p. 134).

4. Interferences

4.1. There are no gamma-ray spectral interferences for ^{137}Cs.

4.2. Avoid direct detector contamination with ^{137}Cs from samples or improperly shielded high-level ^{137}Cs sources in or near the count room. Monitor these potential problem areas by systematically counting detector backgrounds each week.

5. Collection and Storage of Samples

5.1. Acidify water samples to 1% with HNO_3 soon after collection.

5.2. Complete analysis within 6 months.

6. Apparatus

6.1. Graduated cylinder: 500-mL.

6.2. Gamma-ray spectrometer with Ge(Li) detector: EG&G Ortec, Model 137C P2-2, EG&G Ortec, Oak Ridge, TN.

6.3. Canberra Model 2025 AFT research amplifier: Canberra Industries, Inc., Meridan, CT.

6.4. Personal computer: IBM Corp., Boca Raton, FL.

6.5. Enhanced color display monitor: IBM Corp., Boca Raton, FL.

6.6. Proprinter: IBM Corp., Boca Raton, FL.

6.7. Multichannel analyzer software: EG&G Ortec ACE 4-B1 and ACE 2-B1, EG&G Ortec, Oak Ridge, TN.

6.8. Maestro multichannel analyzer software: EG&G Ortec A63-B2/A63-B4, EG&G Ortec, Oak Ridge, TN.

6.9. Master library software: EG&G Ortec A53, EG&G Ortec, Oak Ridge, TN.

6.10. Application Manager software: EG&G Ortec A18, EG&G Ortec, Oak Ridge, TN.

6.11. GeLiGam gamma-ray analysis software: EG&G Ortec A30-B1, EG&G Ortec, Oak Ridge, TN.

6.12. Polyethylene bottles: 500-mL, wide-mouth, VWR series 16126.

7. Reagents

7.1. Nitric acid (concentrated, reagent-grade).

8. Calibration and Standards

8.1. Maintain National Institute of Standards and Technology (NIST) traceability throughout the calibration procedure.

8.2. Determine counter efficiencies for water samples using a 7200-s count of a 500-mL standard prepared from Amersham (QCY.44) primary standard, mixed radionuclide solution.

8.3. Check detector energy calibrations each week with NIST SRM 4215-F.

8.4. Take background counts for 3600 s each week.

8.5. Check quality control each week with an Amersham (CDZ.24) ^{137}Cs primary standard.

9. Procedure

9.1. Sample preparation.

9.1.1. Measure 500 mL of sample into a graduated cylinder and pour it into a 500-mL polyethylene bottle.

9.2. Nuclear counting.

9.2.1. Center the 500-mL sample bottle on the face of the Ge(Li) detector.

9.2.2. Accumulate gamma-ray spectra for 3600 s by entering **STARTACQ** after the DOS prompt. See *Application Manager (A18-B1)*, "Examples of Operation," pp. 15-18.

9.2.3. When the counting sequence is complete, enter the following commands after the DOS prompt: **STORE**, **SAMPLE**, **DETECTOR**, **GERPAR**, and **CONVERT**. See *Application Manager (A18-B1)*, "Examples of Operation," p. 27 for **STORE**, pp. 50-51 for **SAMPLE**, pp. 54-57 for **DETECTOR**, pp. 66-76 for **GERPAR**, and pp. 87-88 for **CONVERT**.

10. Calculations

10.1. Identify the ^{137}Cs peak and calculate the concentrations using the procedure described in *GeLiGam (A30-B1) Gamma-ray analysis*. Enter the following

commands after the DOS prompt: **AN1**, **AN2**, and **RPT**. See pp. 58-61 for **AN1**, pp. 61-62 for **AN2**, and pp. 63-67 for **RPT**.

10.2. Calculate the activity of ^{137}Cs in waste water samples using the following equation:

$$A = \frac{C_s - C_b}{Y \times E \times CT \times V \times 2200 \times e^{-\lambda t}} ,$$

where A = activity (nCi/L),
C_s = gross counts in the ^{137}Cs peak,
C_b = background counts,
Y = gamma yield,
E = detector efficiency,
CT = count time (min),
V = sample volume (L),
2200 = factor to convert dpm to nCi,
e = base of natrual logrithims (2.718...),
λ = $0.693/^{137}Cs$ half-life (days), and
t = decay time (days).

10.3. The uncertainty in ^{137}Cs activity is calculated from recoveries from seven replicates of NIST-traceable materials. The replicates are individually sampled and carried through the entire sample preparation and measurement process. Uncertainties are calculated as plus or minus the standard deviation of the difference between the true value and its measured value for each replicate. The uncertainty for this procedure was found to be ±2% (Laboratory notebook A004590, p. 134). For low-activity samples, uncertainties are based on standard counting statistics when they exceed 2%.

11. Proper Waste Disposal Practices

11.1. Solid waste.

11.1.1. Radiochemically contaminated waste.

11.1.1.1. Accumulate radiochemically contaminated solid waste, such as paper wipes, plastic pipettes, and plastic bottles in a metal can which contains a cardboard box lined with a plastic bag. Do not place hazardous waste in this can.

11.1.1.2. Label the can with a radioactive waste label.

11.1.1.3. When the cardboard box is full, remove it from the can, seal with tape, and label as radioactive compactable waste. Store the waste in the laboratory pending disposal by the Waste Management group.

11.1.1.4. Place a new cardboard box and plastic bag in the waste can for continued use.

11.2. Liquid waste.

11.2.1. Dispose of liquid waste contaminated with radionuclides in a sink specifically approved for the disposal of aqueous radioactive waste and inorganic acids and bases.

11.3. Waste pickup.

11.3.1. Radioactively contaminated waste.

11.3.1.1. The surface exposure rate of the sealed box of radiochemically contaminated solid waste is determined by a radiation protection technician and is recorded on the Radioactive Solid Waste Disposal (RSWD) record form.

11.3.1.2. Request pickup by the Waste Management group of a full box of radiochemically contaminated solid waste using the current Chemical Waste Disposal Request (CWDR) form. The current Waste Profile Request Form (WPRF) which describes the waste is referenced on both disposal request forms.

11.3.1.3. The Waste Management group picks up the waste for disposal according to Laboratory policy.

12. Source Material

12.1. *Application Manager (A18-B1)*, "Examples of Operation" (EG&G Ortec, Oak Ridge, Tennessee, 1987).

12.2. *GeLiGam (A30-B1) Gamma-Ray Analysis* (EG&G Ortec, Oak Ridge, Tennessee, 1986).

12.3. "Low-Level Radioactive Solid Waste," Administrative Requirement 10-2, in *Environment, Safety, and Health Manual*, Los Alamos National Laboratory Manual, Chapter 1 (most recent edition).

12.4. "Hazardous and Mixed Waste," Administrative Requirement 10-3, in *Environment, Safety, and Health Manual*, Los Alamos National Laboratory Manual, Chapter 1 (most recent edition).

Revisions or additions to the procedure are marked (▒▒▒▒). Where a section heading is marked, the entire section has been revised.

GAMMA ACTIVITY IN WASTE WATER — GAMMA SPECTROMETRY WITH LITHIUM-DRIFTED GERMANIUM DETECTOR

Analyte: Cobalt-57, cobalt-60, manganese-54, and any other gamma-emitting nuclide present in concentrations >1 nCi/L	**Method No.:** WR140
Matrix: Waste water	**Minimum Detectable Activity:** ^{57}Co 150 pCi/sample ^{54}Mn 140 pCi/sample ^{60}Co 150 pCi/sample
Procedure: Gamma spectrometry with Ge(Li) detector	**Accuracy and Precision:** (mean ± 1 sigma) ^{57}Co 99% ± 2% ^{54}Mn 109% ± 2% ^{60}Co 96% ± 4% **Acceptable Minimum Detectable Activity:** ^{57}Co 500 nCi/L ^{54}Mn 100 nCi/L ^{60}Co 50 nCi/L
Effective Date: 12/20/85	**Author:** Terry D. Filer

SAFETY NOTE: Before beginning this procedure, read all of the Material Safety Data Sheets for the chemicals listed in Sec. 7. Read Sec. 4.3 of the EM-9 Safety Manual for information on personal protective clothing and equipment. Read Sec. 11 of this procedure and Source Materials 12.5 and 12.6 for proper waste disposal practices.

1. Principle of Method

1.1. The waste water sample is scanned for gamma-emitting nuclides with energies between 0 and 3,000 keV. Quantitative data are obtained by calculation of net gamma-ray peak areas at the energies of the nuclide being determined.

2. Sensitivity

2.1. Sensitivity is limited by counter background and self-absorption in the sample.

2.2. For routine measurements with a 3,600-s counting period and counting efficiencies from 0.10% to 1.3%, the minimum detection limits (three times the standard deviation of the blank) are listed below (Laboratory notebook A004590, p. 138).

Nuclide	Energy (keV)	Detector Efficiency	Detection Limit (pCi/sample)
^{57}Co	122	1.03	150
^{54}Mn	835	0.18	140
^{60}Co	1173	0.13	150

3. Accuracy and Precision

3.1. The precision of the analysis of waste water samples is limited by a low peak/background ratio. Values are reported with a minimum 2% uncertainty unless this percentage is exceeded by that based upon standard counting statistics.

3.2. Calculate routine performance data by dividing the EM-9 result on each individual QC analysis by the certified value for each material. Summarize these data by calculating a mean ratio ± 1 standard deviation, as shown below (Laboratory notebook A004590, pp. 135-137).

Nuclide	Mean ± 1 SD (%)
^{57}Co	99 ± 2
^{54}Mn	109 ± 2
^{60}Co	96 ± 4

4. Interferences

4.1. Nuclides interfere with each other when gamma energies are so close that more than one photon is included in the energy window. For example, ^{154}Eu interferes with the ^{57}Co photopeak at 122 keV and the ^{22}Na photopeak at 1,275 keV. This interference can sometimes be corrected by using noninterfering lower-yield photopeaks.

5. Collection and Storage of Samples

5.1. Acidify samples to 1% with HNO_3 soon after collection.

6. Apparatus

6.1. Graduated cylinder: 500-mL.

6.2. Gamma-ray spectrometer: equipped with Ge(Li) detector, EG&G Ortec, Model 137C P2-2, EG&G Ortec, Oak Ridge, TN.

6.3. Canberra Model 2025 AFT research amplifier: Canberra Industries, Inc., Meridan, CT

6.4. Computer: IBM XT, IBM Corp., Boca Raton, FL.

6.5. Monitor: IBM enhanced color display, IBM Corp., Boca Raton, FL.

6.6. IBM proprinter: IBM Corp., Boca Raton, FL.

6.7. Multichannel analyzer software: EG&G Ortec ACE 4-B1 and ACE 2-B1, EG&G Ortec, Oak Ridge, TN.

6.8. Maestro multichannel analyzer software: EG&G Ortec A63-B2/A63-B4, EG&G Ortec, Oak Ridge TN.

6.9. Master library software: EG&G Ortec A53, EG&G Ortec, Oak Ridge, TN.

6.10. Application Manager software: EG&G Ortec A18, EG&G Ortec, Oak Ridge, TN.

6.11. GeLiGam gamma-ray analysis software: EG&G Ortec A30-B1, EG&G Ortec, Oak Ridge, TN.

6.12. Polyethylene bottles: 500-mL, wide-mouth, VWR series 16126.

7. Reagents

7.1. Nitric acid (concentrated, reagent-grade).

8. Calibration and Standards

8.1. Maintain National Institute of Standards and Technology (NIST) traceability throughout the calibration procedure.

8.2. Prepare a detector efficiency vs energy calibration and a channel vs. energy calibration for water samples using a 3,600-s count of 500-mL standards prepared from Amersham (QCY.44) primary standard, mixed radionuclide solution.

8.2.1. The procedure for calibration of the detector is described in the *GeLiGam (A30-B1) Gamma-Ray Analysis* software manual, pp. 19-39.

8.3. Take background counts of 3,600 s each week.

8.4. Check detector energy calibrations each week with NIST SRM 4215-F.

8.5. Check QC each week with a mixed standard that contains the following:

^{57}Co (Amersham CTZ.44),
^{54}Mn (Amersham MFZ.44),
^{60}Co (Amersham CKZ.24),
^{137}Cs (Amersham CDZ.24), and
^{241}Am (Amersham AMZ.240).

9. Procedure

9.1. Sample preparation.

9.1.1. Measure 500 mL of sample in a graduated cylinder and pour it into a 500-mL plastic bottle.

9.2. Nuclear counting.

9.2.1. Center the 500-mL sample bottle on the face of the Ge(Li) detector.

9.2.2. Accumulate gamma-ray spectra for 3,600 s by entering **STARTACQ** after the DOS prompt. See *Application Manager (A18-B1)*, "Examples of Operation," pp. 15-18.

9.2.3. When the counting sequence is complete, enter the following commands after the DOS prompt: **STORE**, **SAMPLE**, **DETECTOR**, **GERPAR**, and **CONVERT**. See *Application Manager (A18-B1)*, "Examples of Operation," p. 27 for **STORE**, pp. 50-51 for **SAMPLE**, pp. 54-57 for **DETECTOR**, pp. 66-76 for **GERPAR**, and pp. 87-88 for **CONVERT**.

10. Calculations

10.1. Calculate the activity of the particular nuclide being measured using the following formula:

$$A = \frac{C_s - C_b}{e^{-\lambda t} \times Y \times E \times CT \times V \times 2.22} ,$$

where A = activity (pCi/L),
C_s = gross counts in the nuclide peak,
C_b = background counts,
e = base of natural logarithms (2.718...),
λ = 0.693/(nuclide half-life in days),
t = decay time (days),
Y = gamma yield,
E = detector efficiency,
CT = count time (min),
V = volume (L), and
2.22 = constant.

10.2. The uncertainty in the activities in the QA standard is calculated from recoveries from seven replicates of NIST-traceable materials. The replicates are individually sampled and each is carried through the entire sample preparation and measurement process. Uncertainties are calculated as plus or minus the standard deviation of the difference between the true value and its measured value for each replicate. The uncertainty for this procedure was found to be ±2% for most nuclides (Laboratory notebook A004590, pp. 133-138). For low-activity samples, uncertainties are based on standard counting statistics when they exceed 2%.

10.3. Identify the nuclides and calculate concentrations using the procedure described in *GeLiGam (A30-B1) Gamma-Ray Analysis*. Enter the following commands after the DOS prompt: **AN1**, **AN2**, and **RPT**. See pp. 58-61 for **AN1**, pp. 61-62 for **AN2**, and pp. 63-67 for **RPT**.

11. Proper Waste Disposal Practices

11.1. Solid waste.

11.1.1. Radiochemically contaminated waste.

11.1.1.1. Accumulate radiochemically contaminated solid waste, such as paper wipes, plastic pipettes, and plastic bottles in a metal can which contains a cardboard box lined with a plastic bag. Do not place hazardous waste in this can.

11.1.1.2. Label the can with a radioactive waste label.

11.1.1.3. When the cardboard box is full, remove it from the can, seal with tape, and label as radioactive compactable waste. Store the waste in the laboratory pending disposal by the Waste Management group.

11.1.1.4. Place a new cardboard box and plastic bag in the waste can for continued use.

11.2. Liquid waste.

11.2.1. Dispose of liquid waste contaminated with radionuclides in a sink specifically approved for the disposal of aqueous radioactive waste and inorganic acids and bases.

11.3. Waste pickup.

11.3.1. Radioactively contaminated waste.

11.3.1.1. The surface exposure rate of the sealed box of radiochemically contaminated solid waste is determined by a radiation protection technician and is recorded on the Radioactive Solid Waste Disposal (RSWD) record form.

11.3.1.2. Request pickup by the Waste Management group of a full box of radiochemically contaminated solid waste using the current Chemical Waste Disposal Request (CWDR) form. The current Waste Profile Request Form (WPRF) which describes the waste is referenced on both disposal request forms.

11.3.1.3. The Waste Management group picks up the waste for disposal according to Laboratory policy.

12. Source Material

12.1. *Analytical Chemistry Branch Procedures Manual*, L. Z. Bodnar and D. R. Percival, Eds. (Radiological and Environmental Sciences Laboratory, US Department of Energy, Idaho Falls, Idaho, 1982).

12.2. *Multichannel Analyzer Software (ACE4-B1 and ACE2-B1) Operator's Manual* (EG&G Ortec, Oak Ridge, Tennessee, 1986).

12.3. *GeLiGam (A30-B1) Gamma-Ray Analysis* (EG&G Ortec, Oak Ridge, Tennessee, 1986).

12.4. *Application Manager (A18-B1)*, "Examples of Operation" (EG&G Ortec, Oak Ridge, Tennessee, 1987).

12.5. "Low-Level Radioactive Solid Waste," Administrative Requirement 10-2, in *Environment, Safety, and Health Manual*, Los Alamos National Laboratory Manual, Chapter 1 (most recent edition).

12.6. "Hazardous and Mixed Waste," Administrative Requirement 10-3, in *Environment, Safety, and Health Manual*, Los Alamos National Laboratory Manual, Chapter 1 (most recent edition).

Revisions or additions to the procedure are marked (▒▒▒▒). Where a section heading is marked, the entire section has been revised.

GROSS ALPHA, BETA, AND GAMMA ACTIVITY IN WASTE WATER, SOIL, FILTER CAKE, AND ORGANIC MATERIALS — GAS-FLOW PROPORTIONAL COUNTING

Analyte: Alpha-, beta-, and/or gamma-emitting nuclides	**Method No.:** WR150
Matrix: Waste water, filter cake, soil, and organics	**Minimum Detectable Activity:** Alpha 0.5 pCi/sample Beta 1.5 pCi/sample Gamma 30 pCi/sample
Procedure: Alpha and beta counting with gas-flow proportional counter. Gamma counting with NaI detector.	**Accuracy and Precision:** (mean ± 1 sigma) Alpha 99% ± 1% at the 250 pCi level Beta 99% ± 2% at the 250 pCi level **Acceptable Minimum Detectable Activity:** Alpha 30 pCi/L Beta 300 pCi/L Gamma 10 nCi/L
Effective Date: 01/14/86	**Author:** Terry D. Filer

SAFETY NOTE: Before beginning this procedure, read all of the Material Safety Data Sheets for the chemicals listed in Sec. 7. Read Sec. 4.3 of the EM-9 Safety Manual for information on personal protective clothing and equipment. Read Sec. 12 of this procedure and Source Materials 13.2 and 13.3 for proper waste disposal practices.

1. Principle of Method

1.1. This procedure is for screening samples for gross alpha, beta, and/or gamma activity in water solution samples, filter cake samples, or organic samples.

1.2. Filter cake samples are dried and digested with $HNO_3 \bullet HF$.

1.3. Five mL of water solution samples, 5 mL of digested filter cake samples, or 2 mL of organic liquid are evaporated to dryness on a stainless steel planchet and heated to a dull red color.

1.4. The planchets are counted in a Canberra 2400 alpha/beta/gamma system.

2. Sensitivity

2.1. Sensitivity is limited by the counter background.

2.2. For routine measurements with a 50-min counting period and counting efficiencies of approximately 20% for alpha, 30% for beta, and 10% for gamma determination, the minimum detection limit (three times the standard deviation of the blank) is 0.5 pCi/sample for alpha, 1.5 pCi/sample for beta, and 30 pCi/sample for gamma activity. The efficiency for alpha analysis is based on a ^{242}Pu secondary standard (Laboratory notebook A004589, pp. 92-93). The efficiency for beta analysis is based on a $^{90}Sr/^{90}Y$ primary standard (Amersham SIZ.64). The efficiency for gamma analysis is based on a $^{137}Cs/^{137m}Ba$ primary standard (NIST SRM 4233-B).

3. Accuracy and Precision

3.1. Routine performance data are calculated by dividing the result on each individual QC analysis by the certified value and are summarized by calculating a mean ratio ± 1 standard deviation.

3.2. The mean value of the ratio of the QC result compared with the certified value for a ^{233}U primary standard (NIST SRM 995) is equal to 99% ± 1% at the 250-pCi level for alpha activity.

3.3. The mean value of the ratio of the QC result compared with the certified value for a $^{90}Sr/^{90}Y$ primary standard (Amersham SIZ.64) is equal to 99% ± 2% at the 250-pCi level for beta activity.

3.4. No QC standards are available for gross gamma activity.

4. Interferences

4.1. High salt content in the dried water solutions causes self-absorption and scattering in the determination of gross alpha activity. However, because this process is only a screening procedure, no correction is made for high salt content.

4.2. Some radioactivities, such as that of selenium or cesium radioisotopes, may be lost when samples are heated to a dull red color. Such losses are limitations of the test method.

5. Collection and Storage of Samples

5.1. Acidify waste water samples to 1% with HNO_3.

5.2. No treatment is given to filter cake samples or organic samples before analysis.

6. Apparatus

6.1. Canberra 2400 alpha/beta/gamma system: Canberra Industries, Inc., Meriden, Connecticut.

6.2. Planchets: stainless steel, concentric 2-in. by 0.125-in., Atomic Product Corporation, stock no. 129-019, Shirley, New York 11967.

6.3. Pipette: 5-mL volumetric.

6.4. Hot plate: adjustable from 10°F above ambient temperature to 700°F.

6.5. K.S.E. glove box: equipped with a Blue M Infra oven and an Ainsworth electronic balance (0.00- to 200.00-g capacity).

6.6. Flasks: 100-mL, volumetric.

7. Reagents

7.1. Hydrofluoric acid (concentrated, 48%).

7.2. Nitric acid (concentrated, 70%).

7.3. Nitric acid (12 M) • hydrofluoric acid (1 M): mix 1536 mL of concentrated HNO_3, 67 mL of concentrated HF, and 401 mL of water. Store in a 2000-mL polyethylene bottle.

7.4. Nitric acid: Dilute concentrated HNO_3 1:1.

8. Calibration and Standards

8.1. Alpha standard for efficiency determinations.

8.1.1. Use a ^{242}Pu secondary standard that has been standardized against National Institute of Standards and Technology (NIST) Standard Reference Material (SRM) 995, ^{233}U, to calculate the alpha efficiency of the counter.

8.1.2. Check alpha efficiency as needed by drying 5 mL of the ^{242}Pu secondary standard on a stainless-steel planchet and counting the sample for 5 min.

8.2. Beta standard for efficiency determinations.

8.2.1. Use the $^{90}Sr/^{90}Y$ stock solution from Amersham SIZ.64.

8.2.2. Prepare the standard solution in 4 M HNO_3.

8.2.3. Check beta efficiency as needed by drying 5 mL of the $^{90}Sr/^{90}Y$ primary standard on a stainless-steel planchet and counting the sample for 5 min.

8.3. Gamma standard for efficiency determinations.

8.3.1. Prepare the standard from a $^{137}Cs/^{137m}Ba$ primary standard (NIST SRM 4233-B).

8.3.2. Check gamma efficiency each day by drying 5 mL of the $^{137}Cs/^{137m}Ba$ primary standard on a stainless-steel planchet and counting the sample for 50 min.

8.4. Quality control standard.

8.4.1. Prepare a quality control standard from a mixture of ^{233}U (NIST SRM 995) and $^{90}Sr/^{90}Y$ (Amersham SIZ 64).

8.4.2. Dry 5 mL of the quality control standard on a stainless-steel planchet and count each day for 50 min.

8.5. Backgrounds.

8.5.1. The blank consists of a stainless-steel planchet, 2-in. by 0.125-in.

8.5.2. Count the blank each day for 100 min to determine the background count rate of the counter.

8.6. Chi-square tests.

8.6.1. The chi-square test is a good indication of any intermittent instrument problem. Check as needed on alpha and beta standards. See the *Alpha/Beta/Gamma System Model 2400 Operator's Manual*, p. 48.

8.7. Instrument plateaus.

8.7.1. Check the operating voltage for alpha and beta counting when alpha and/or beta chi-square tests or efficiencies become erratic. Use the **PLATEAU** function on the Canberra 2400. See the *Alpha/Beta/Gamma System Model 2400 Operator's Manual*, p. 47.

9. Procedure

9.1. Waste water samples.

9.1.1. Dry 5 mL of the sample on a stainless-steel planchet. Heat to a dull red.

9.1.2. Count samples for 50 min in the Canberra 2400 alpha/beta/gamma system.

9.2. Filter cake.

9.2.1. Place 0.5 g of dried filter cake into a 150-mL beaker. Dry and weigh the sample in a glove box.

9.2.2. Add 20 mL of 12 M HNO_3 • 1 M HF to the sample. Cover with a watch glass and digest for 20 min on a hot plate.

9.2.3. Remove the sample from the hot plate, and carefully decant the supernate into a 100-mL volumetric flask.

9.2.4. Add 20 mL of 12 M HNO_3 • 1 M HF to the remaining residue in the 150-mL beaker. Cover with a watch glass and digest for 20 min on a hot plate.

9.2.5. Remove the sample from the hot plate and carefully decant the supernate into the 100-mL volumetric flask containing the first digestion.

9.2.6. Add 10 mL of 1:1 HNO_3 to the remaining residue in the 150-mL beaker. Cover with a watch glass and digest for 10 min on a hot plate.

9.2.7. Remove the sample from the hot plate and carefully decant the supernate into the 100-mL volumetric flask.

9.2.8. Dilute the combined solution from the three digestions to volume with 1:1 HNO_3.

9.2.9. Dry 5 mL of the digested filter cake on a stainless-steel planchet. Heat to a dull red color.

9.2.10. Count the sample in the Canberra 2400 alpha/beta/gamma system for 10 min.

9.3. Organic samples.

9.3.1. Dry 2 mL of the organic liquid on a stainless-steel planchet. Heat to a dull red color.

9.3.2. Count samples for 50 min in the Canberra 2400 alpha/beta/gamma system.

9.4. Soil samples.

9.4.1. Dry 1.0 g of soil on a stainless steel planchet.

9.4.2. Cover the planchet with a commercially available plastic film. Do the same with an alpha (8.1) and beta standard (8.2). Gamma efficiency is not affected by the plastic film.

9.4.3. Count samples and standards for 50 min in the Canberra 2400 alpha/beta/gamma system.

10. Operation of Equipment

10.1. Refer to the *Alpha/Beta/Gamma System Model 2400 Operator's Manual.*

11. Calculations

11.1. Crosstalk.

11.1.1. Crosstalk is the condition where alpha events are counted in the beta channel or beta events are counted in the alpha channel. It only occurs in simultaneous alpha/beta counting.

11.1.2. The system should be set up so that less than 1% of the beta events are counted in the alpha channel. This is accomplished by varying the disc window values and the operating voltage values in the user program (as described on p. 47 of the *Alpha/Beta/Gamma System Model 2400 Operator's Manual*).

11.1.3. The alpha crosstalk is found by counting a pure alpha emitter such as the $^{239}Pu/^{238}Pu$ secondary standard. The alpha crosstalk percentage is calculated by dividing the beta channel counts by the alpha channel counts and multiplying by 100.

11.2. Counting efficiency.

11.2.1. Determine the alpha counting efficiency of the counter using the following equation:

$$EF_a = \frac{100 \times \left(\frac{R_a}{t_o} - B_a\right)}{A_a} ,$$

where EF_a = alpha counting efficiency (%),
100 = factor to convert to percentage,
R_a = total counts in alpha channel,
t_o = sample count time,
B_a = alpha background count rate (cpm), and

A_a = activity of alpha standard (dpm).

11.2.2. Determine the beta counting efficiency of the counter using the following equation:

$$EF_b = \frac{100 \times \left(\frac{R_b}{t_o} - B_b\right)}{A_b} ,$$

where EF_b = beta counting efficiency,
100 = factor to convert to percentage,
R_b = total counts in beta channel,
t_o = sample count time,
B_b = beta background count rate (cpm), and
A_b = activity of beta standard (dpm).

11.2.3. Determine the gamma counting efficiency (EF_g) of the counter using the following equation:

$$EF_g = \frac{100 \times \left(\frac{R_g}{t_o} - B_g\right)}{A_g} ,$$

where EF_g = gamma counting efficiency,
100 = factor to convert to percentage,
R_g = total counts in gamma channel,
t_o = sample count time,
B_g = gamma background count rate (cpm), and
A_g = activity of gamma standard (dpm).

11.2.4. Standard deviation of counting efficiencies. The standard deviation of the alpha, beta, and gamma counting efficiencies is determined experimentally from the instrument efficiencies measured over a period of several months.

11.3. Net count calculations. At the end of each counting cycle the net counts and net count error are calculated for the alpha and beta channels. The net count is the counts/min with background subtracted and an alpha crosstalk correction performed.

This calculation is performed automatically by the instrument when the appropriate values for alpha and beta background, alpha crosstalk, background collection time, and error value are stored in the user program.

11.3.1. The equation for net count in the alpha channel is

$$N_a = \frac{R_a}{t_o} - B_a \quad ,$$

where N_a = the net alpha count rate (cpm),
R_a = total counts in the alpha channel,
t_o = sample count time, and
B_a = alpha background count rate (cpm).

11.3.2. The error calculation for the net alpha counts is

$$EN_a = \sqrt{\left(\frac{N_a}{t_o} + \frac{B_a}{t_b}\right) \times E_s} \quad ,$$

where EN_a = alpha channel net count rate error,
N_a = the net alpha count rate (cpm),
t_o = sample count time,
B_a = alpha background count rate (cpm),
t_b = background count time, and
E_s = error value from user program, usually 1.96.

11.3.3. The equation for net counts in the beta channel becomes slightly more complex due to the alpha crosstalk factor. This equation is

$$N_b = \frac{R_b}{t_o} - B_b - \left(N_a \times \frac{X}{100}\right) \quad ,$$

where N_b = net beta count rate (cpm),
R_b = total counts in the beta channel,
t_o = sample count time,
B_b = beta background count rate (cpm),
N_a = the net alpha count rate (cpm), and
X = alpha crosstalk.

11.3.4. The error calculation for the net beta count is

$$EN_b = \sqrt{\left(E_s \times \sqrt{\frac{N_b}{t_o} + \frac{B_b}{t_b}}\right)^2 + \left(X \times \frac{EN_a}{100}\right)^2} \quad ,$$

where EN_b = error for net beta count,
E_s = error value from user program, usually 1.96,
N_b = net beta count rate (cpm),
t_o = sample count time,
B_b = beta background count rate (cpm),
t_b = background count time,
X = alpha crosstalk,
EN_a = alpha channel net count rate error, and
100 = constant.

11.3.5. The equation for net counts in the gamma channel is

$$N_g = \frac{R_g}{t_o} - B_g \quad ,$$

where N_g = net gamma count rate (cpm),
R_g = total counts in the gamma channel,
t_o = sample count time, and
B_g = gamma background count rate (cpm).

11.4. Concentration calculations. The concentration and concentration-error calculations are performed at the end of each counting cycle. The activity of the sample is in pCi per unit volume.

For these calculations to be performed automatically by the instrument, the additional values of alpha and beta efficiency and sample volume must also be stored in the user program. Calculations for gamma concentrations must be done by hand.

11.4.1. The equation for concentration in the alpha channel is

$$C_a = \frac{100 \times N_a}{2.22 \times V \times EF_a} \quad ,$$

where C_a = concentration for alpha (pCi/volume),
100 = constant,
N_a = the net alpha count rate (cpm),
2.22 = factor to convert dpm to pCi,
V = sample volume, and
EF_a = alpha efficiency (%).

11.4.2. The error value for the alpha concentration is

$$EC_a = \frac{100 \times EN_a}{2.22 \times EF_a \times V} ,$$

where EC_a = the alpha concentration error,
100 = constant,
EN_a = alpha channel net count rate error,
2.22 = factor to convert dpm to pCi,
EF_a = alpha counting efficiency, and
V = sample volume.

11.4.3. The beta concentration calculation is

$$C_b = \frac{100 \times N_b}{2.22 \times EF_b \times V} ,$$

where C_b = the beta concentration (pCi/volume),
100 = constant,
N_b = net beta count rate (cpm),
2.22 = factor to convert dpm to pCi,
EF_b = beta counting efficiency, and
V = sample volume.

11.4.4. The error value for the beta concentration is

$$EC_b = \sqrt{\left(\frac{EN_b}{EF_b}\right)^2 + \frac{\left(X \times \frac{EN_a}{100 \times EF_a}\right)^2}{2.22 \times V}} ,$$

where EC_b = the beta concentration error,
EN_b = error for net beta count,

EF_b = beta counting efficiency,
X = alpha crosstalk,
EN_a = alpha channel net count rate error,
100 = constant,
EF_a = alpha counting efficiency,
2.22 = factor to convert dpm to pCi, and
V = sample volume.

11.4.5. The gamma concentration calculation is

$$C_g = \frac{100 \times N_g}{2.22 \times EF_g \times V} ,$$

where C_g = the gamma concentration (pCi/volume),
100 = constant,
N_g = net gamma count rate (cpm),
2.22 = factor to convert dpm to pCi,
EF_g = gamma counting efficiency, and
V = sample volume.

11.4.6. The error value for the gamma concentration is

$$EC_g = 2 \times \sqrt{\frac{N_g}{t_o} + \frac{B_g}{t_b}} ,$$

where EC_g = the gamma concentration error.
2 = constant,
N_g = net gamma count rate (cpm),
t_o = sample count time,
B_g = gamma background count rate (cpm), and
t_b = background count time.

11.5 Uncertainty.

11.5.1. A 10% uncertainty is assigned to each concentration value unless the error values for alpha concentration (see 11.4.2), for beta concentration (see 11.4.4), and for gamma concentration (see 11.4.6) exceed 10%. In this case, the error values are used.

12. Proper Waste Disposal Practices

12.1. Solid waste.

12.1.1. Radiochemically contaminated compactable waste.

12.1.1.1. Accumulate radiochemically contaminated solid waste, such as paper wipes, plastic pipettes, and plastic bottles, in a metal can which contains a cardboard box lined with a plastic bag. Do not place hazardous waste in this can.

12.1.1.2. Label the can with a radioactive waste label.

12.1.1.3. When the cardboard box is full, remove it from the can, seal with tape, and label as radioactive compactable waste. Store the waste in the laboratory pending disposal by the Waste Management group.

12.1.1.4. Place a new cardboard box and plastic bag in the waste can for continued use.

12.2. Liquid waste.

12.2.1. Dispose of liquid waste that is contaminated with radionuclides in a sink specifically approved for the disposal of aqueous radioactive waste and inorganic acids and bases.

12.3. Waste pickup.

12.3.1. Radioactively contaminated waste.

12.3.1.1. The surface exposure rate of the sealed box of radiochemically contaminated solid waste is determined by a radiation protection technician and is recorded on the Radioactive Solid Waste Disposal (RSWD) record form.

12.3.1.2. Request pickup by the Waste Management group of a full box of radiochemically contaminated solid waste using the current Chemical Waste Disposal Request (CWDR) form. The current Waste Profile Request Form (WPRF) that describes the waste is referenced on both disposal request forms.

12.3.1.3. The Waste Management group picks up the waste for disposal according to Laboratory policy.

13. Source Material

13.1. *Alpha/Beta/Gamma System Model 2400 Operator's Manual* (Canberra Industries, Inc., Meriden, Connecticut, 1987).

13.2. "Low-Level Radioactive Solid Waste," Administrative Requirement 10-2, in *Environment, Safety, and Health Manual*, Los Alamos National Laboratory Manual, Chapter 1 (most recent edition).

13.3. "Hazardous and Mixed Waste," Administrative Requirement 10-3, in *Environment, Safety, and Health Manual*, Los Alamos National Laboratory Manual, Chapter 1 (most recent edition).

Revisions or additions to the procedure are marked (▒▒▒▒). Where a section heading is marked, the entire section has been revised.

PLUTONIUM, AMERICIUM, AND URANIUM IN WASTE WATER AND FILTER CAKE — NEODYMIUM FLUORIDE COPRECIPITATION

Analyte: Plutonium, americium, and uranium	**Method No.:** WR180
Matrix: Waste water and filter cake **Procedure:** Neodymium fluoride copreciptation	**Minimum Detectable Activity:** ^{239}Pu 0.5 pCi/sample ^{238}Pu 2 pCi/sample ^{241}Am 0.4 pCi/sample ^{235}U 0.2 pCi/sample ^{234}U 0.7 pCi/sample **Accuracy and Precision:** (mean ± 1 sigma) ^{238}Pu 97% ± 7% ^{241}Am 91% ± 4% ^{234}U 108% ± 9% ^{235}U 95% ± 8% **Acceptable Minimum Detectable Activity:** 50 pCi/L for waste water
Effective Date: 10/17/88	**Author:** Terry D. Filer

SAFETY NOTE: Before beginning this procedure, read all of the Material Safety Data Sheets for the chemicals listed in Sec. 7. Read Sec. 4.3 of the EM-9 Safety Manual for information on personal protective clothing and equipment. Read Sec. 12 of this procedure and Source Materials 13.2 and 13.3 for proper waste disposal practices.

1. Principle of Method

1.1. Plutonium, americium, and uranium are dissolved in 2% nitric acid after digestion with nitric acid • hydrofluoric acid.

1.2. The actinides are coprecipitated with cerium hydroxide.

1.3. Thorium is separated from the other actinides by coprecipitation on ceric iodate.

1.4. Uranium, plutonium, and americium are separated sequentially by oxidizing them to their highest oxidation states followed by a series of coprecipitations of the nuclides.

1.5. The isolated nuclides are coprecipitated on neodymium fluoride, filtered, and counted by alpha spectrometry.

2. Sensitivity

2.1. Sensitivity is limited by the counter background.

2.2. For routine measurements with a 60-min count length and a counting efficiency of approximately 20%, the minimum detection limit (three times the standard deviation of the blank) is 0.5 pCi/sample for ^{239}Pu, 2 pCi/sample for ^{238}Pu, 0.4 pCi/sample for ^{241}Am, 0.2 pCi/sample for ^{235}U, and 0.7 pCi/sample for ^{234}U (Laboratory notebook A004589, p. 103).

3. Accuracy and Precision

3.1. Routine performance data was obtained by dividing the result from each QC analysis by the certified value for each material and calculating a mean ratio ±1 standard deviation. The QC for $^{235}U/^{234}U$ was derived from the primary standard (NIST SRM 993). The QC for ^{238}Pu was derived for the primary standard (NIST SRM 4323). The QC for ^{241}Am was derived from the primary standard (Amersham AMZ.240), (Laboratory notebook A004589, p. 104.)

Nuclide	Mean ± SD
^{238}Pu	97% ± 7%
^{241}Am	91% ± 4%
^{234}U	108% ± 9%
^{235}U	95% ± 8%

4. Interferences

4.1. Neptunium-237 is a spectral interference to ^{234}U and ^{242}Pu tracer.

5. Collection and Storage of Samples

5.1. Acidify liquid waste samples to 1% with HNO_3 before analysis.

5.2. No treatment is given to filter cake samples before analysis.

5.3. Analysis must be completed within six months.

6. Apparatus

6.1. Alpha spectrometer: Canberra Quad, Model 7404, Canberra Industries, Inc., Meriden, CT.

6.2. Mixer router: Canberra Model 1520, Canberra Industries, Inc., Meriden, CT.

6.3. Detectors: Canberra passivated implanted planar silicon detectors. Model PD-450-21-199-AM, Canberra Industries, Inc., Meriden, CT.

6.4. Computer: Gateway 2000, North Sioux City, SD.

6.5. Monitor: Gateway 2000 Crystal Scan 1024, North Sioux City, SD.

6.6. Printer: IBM Proprinter II, IBM Corp., Boca Raton, FL.

6.7. Multichannel analyzer: System 100-86 Software, Canberra Industries, Inc., Meriden, CT.

6.8. Preamp/amplifier: Canberra Model 7404-01, Canberra Industries, Inc., Meriden, CT.

6.9. Hot plate: adjustable from 10°F above ambient to 700°F.

6.10. Heat lamp: 250-watt, infrared.

6.11. Perchloric acid fume hood.

6.12. Ash-free analytical filter pulp. Schleicher and Schuell, Keene, NH 03431.

6.13. Blast lamp: Fisher.

6.14. Filter paper: 47-mm, Metricel GA-6, Gelman Sciences Co., Ann Arbor, MI.

6.15. K.S.E. glove box: equipped with a Blue M infra oven and Ainsworth electronic balance (0.00- to 200.00-g capacity).

6.16. Centrifuge tubes: 50-mL, round-bottom, polycarbonate.

6.17. Filters: 25-mm, Gelman HT-200 Tuffryn.

6.18. Twist-lock funnel: polysulfone, Gelman Instrument Co., Ann Arbor, MI.

6.19. Centrifuge tubes: 50-mL, round-bottom, glass.

6.20. Centrifuge: equipped with timer and variable speed (0 to 8000 rpm), Beckman GPK Centrifuge, Beckman Instruments, Inc., Palo Alto, CA.

6.21. Beakers: 250-, 400-, and 1000-mL, Teflon.

6.22. Bottles: 1- and 2-L, polypropylene.

7. Reagents

7.1. Hydrochloric acid (concentrated, 36%, reagent-grade).

7.2. Hydrofluoric acid (concentrated, 48%, reagent-grade).

7.3. Nitric acid (concentrated, 70%, reagent-grade).

7.4. Sulfuric acid (concentrated, 96%, reagent-grade).

7.5. Ammonium hydroxide (concentrated, 30%, reagent-grade).

7.6. Hydrogen peroxide solution (30%).

7.7. Titanium trichloride (10%). Aldrich Chemical Company, Inc., Milwaukee, Wisconsin.

7.8. Bromthymol blue (0.1% in water). Dissolve 1.0 g of sodium hydroxide in 80 mL of distilled water in a 100-mL volumetric flask. Add 0.1 g of bromthymol blue and stir until dissolved. Dilute to volume.

7.9. Safranine O (0.1% in water). Dissolve 0.1 g of safranine O in 100 mL of distilled water.

7.10. Nitric acid (12 M) • hydrofluoric acid (1 M). Mix 1536 mL of concentrated nitric acid, 67 mL of concentrated hydrofluoric acid, and 401 mL of water. Store in a 2-L polypropylene bottle.

7.11. Neodymium chloride (10 mg of Nd/mL). Heat 25 mL of concentrated hydrochloric acid and 1.17 g of neodymium oxide on a hot plate until the neodymium oxide is in solution. Cool the solution, dilute to 100 mL, and store in a polypropylene bottle.

7.12. Neodymium chloride (0.5 mg of Nd/mL). Dilute 5 mL of neodymium chloride (10 mg of Nd/mL) to 100 mL with distilled water.

7.13. Neodymium perchlorate (0.5 mg of Nd/mL). Heat 5 mL of neodymium chloride (10 mg of Nd/mL) in 5 mL of concentrated perchloric acid until the perchloric acid fumes. Cool the solution, dilute to 100 mL with water, and treat with 10 to 20 mg of solid potassium dichromate. Store in a polypropylene bottle.

7.14. Carbon suspension. Fume a 47-mm Metricel GA-6 filter for approximately 5 min in 5 mL of concentrated sulfuric acid. Cool the suspension and dilute to 50 mL with water.

7.15. Potassium and sodium sulfate solution. Dissolve 75 g of potassium sulfate and 75 g of sodium sulfate in 800 mL of water and dilute to 1 L.

7.16. Ammonium iodate. Add 20 g of ammonium iodate and 20 mL of concentrated nitric acid to 800 mL of water. Heat the mixture to boiling, cool, and filter through a 47-mm Metricel GA-6 filter. Dilute the filtrate to 1 L with water.

7.17. Ammonium fluoride. Dissolve 80 g of ammonium fluoride in 800 mL of water and dilute to 1 L. Treat the aliquot needed each day for use in the precipitation of the rare earths from americium with enough ammonium persulfate to give a solution concentration of approximately 5% in ammonium persulfate. Store in a polypropylene bottle.

7.18. Cerium nitrate (10 mg of Ce/mL). Dissolve 3.1 g of cerous nitrate hexahydrate in 100 mL of 1% nitric acid (Allied Chemical Co., thorium-free).

7.19. Manganous sulfate hexahydrate (1%). Dissolve 1 g of manganous sulfate hexahydrate in 50 mL of distilled water in a 100-mL volumetric flask. Dilute to volume.

7.20. Ammonium persulfate.

7.21. Perchloric acid (1%) • potassium dichromate (0.01%). Dissolve 0.1 g of potassium dichromate in 500 mL of distilled water in a 1-L volumetric flask. Add 10 mL of concentrated perchloric acid. Dilute to volume.

7.22. Manganous sulfate hexahydrate (50%). Dissolve 50 g of manganous sulfate hexahydrate in enough distilled water to give 100 mL of solution.

7.23. Potassium dichromate (1%). Dissolve 1.0 g of potassium dichromate in 80 mL of distilled water in a 100-mL volumetric flask. Dilute to volume.

7.24. Hydrofluoric acid (20%) • perchloric acid (10%). Add 200 mL of hydrofluoric acid and 100 mL of perchloric acid to 500 mL of distilled water in a 1-L polypropylene bottle. Dilute to 1 L with water and store in the polypropylene bottle.

8. Calibration and Standards

8.1. Plutonium-242 tracer.

8.1.1. Obtain the ^{242}Pu tracer solution from the National Institute of Standards and Technology, SRM 4334D.

8.1.2. Prepare the tracer solution in 4 M HNO_3.

8.2. Americium-243 tracer.

8.2.1. Obtain the ^{243}Am stock solution from the National Institute of Standards and Technology, SRM 4332C.

8.2.2. Prepare the tracer solution in 4 M HNO_3.

8.3. Uranium-232 tracer.

8.3.1. The ^{232}U stock solution was obtained from Los Alamos National Laboratory.

8.3.2. Prepare the tracer solution in 4 M HNO_3.

8.3.3. Concentration of the tracer is in the 50-pCi/mL range and is standardized against NIST SRM 995, a ^{233}U standard.

8.4. Calibration of the alpha spectrometer.

8.4.1. Energy calibration.

8.4.1.1. The method of calibrating channel vs. energy for the multichannel analyzer is described in the Canberra System 100 user's manual, pp. 3.66-3.71.

8.4.1.2. The calibration was based on a two peak standard, $^{242}Pu/^{243}Am$.

8.4.2. Efficiency.

8.4.2.1. Determine the efficiency of each detector using standards of known concentration prepared from ^{242}Pu (NIST SRM 4334D) or ^{243}Am (NIST SRM 4332C).

8.4.2.2. Count the standard for 120 min and determine the total counts under the peak.

8.4.2.3. Calculate the detector efficiency as follows:

$$D = \frac{C\ STD - B}{T \times A\ STD}$$

where D = detector counting efficiency,
C STD = gross counts of standard,
B = background counts, and
A STD = activity for standard (dpm).

8.4.3. Region of Interest.

8.4.3.1. Read the regions of interest (ROI) into the multichannel analyzer display using the directions in the Canberra System 100 user's manual, pp. 3.5-3.7.

8.4.3.2. Use known standards which contain $^{242}Pu/^{239}Pu/^{238}Pu$, $^{243}Am/^{241}Am$, or $^{232}U/^{234}U/^{235}U$ depending upon the analysis desired. This allows for a rapid peak identification and determination of the area under the peak.

9. Procedure

9.1 Sample dissolution.

9.1.1. Liquid waste.

9.1.1.1. Determine the gross alpha activity of the liquid waste. If the activity of the liquid waste is less than 1 nCi/L, use a 500-mL sample. For all other liquid waste samples, adjust the volume so that the total activity does not exceed 500 pCi per sample.

9.1.1.2. Place the sample into the appropriate size of Teflon beaker. Add 1 mL of ^{242}Pu tracer (100 dis/min/mL), 1 mL of ^{243}Am tracer (100 dis/min/mL), and 1 mL of ^{232}U tracer (100 dis/min/mL).

9.1.1.3. Add 20 mL of concentrated HNO_3 and 10 mL of concentrated hydrofluoric acid, and evaporate to dryness.

9.1.1.4. Transfer the solution to a clean 1000-mL beaker using 20 mL of 1:1 HNO_3. Add 50 mL of 30% H_2O_2 and evaporate to dryness.

9.1.1.5. Add 10 mL of concentrated HNO_3 and dilute to 500 mL with distilled water.

9.1.2. Filter cake.

9.1.2.1. Place 0.50 g of dried filter cake into a 250-mL Teflon beaker.

NOTE: The drying and weighing must be performed in a glove box.

9.1.2.2. Add 20 mL of 12 M HNO_3 • 1 M HF to the sample. Cover with a watch glass and digest for 20 min on a hot plate.

9.1.2.3. Remove the sample from the hot plate and carefully decant the supernate into a 100-mL polypropylene volumetric flask.

9.1.2.4. Add 20 mL of 12 M HNO_3 • 1 M HF to the remaining residue in the 250-mL Teflon beaker. Cover with a watch glass and digest for 20 min on a hot plate.

9.1.2.5. Remove the sample from the hot plate and carefully decant the supernate into the 100-mL volumetric flask.

9.1.2.6. Add 10 mL of 1:1 HNO_3 to the remaining residue in the 250-mL Teflon beaker. Cover with a watch glass and digest for 10 min on a hot plate.

9.1.2.7. Remove the sample from the hot plate, and carefully decant the supernate into the 100-mL volumetric flask.

9.1.2.8. Dilute the solution in the 100-mL polypropylene volumetric flask to volume with 1:1 HNO_3.

9.1.2.9. Determine the gross alpha activity of the filter cake using this solution. If the activity of the digested filter cake is 10^5 dpm/g, use a 0.01-g sample. Increase or decrease the sample size by a factor of 10 for each factor of 10 decrease or increase in sample activity.

9.1.2.10. Place the sample in a clean 250-mL Teflon beaker. Add 1 mL of ^{242}Pu tracer (4000 dis/min/mL), 1 mL of ^{243}Am tracer (4000 dis/min/mL), and 1 mL of ^{232}U tracer (100 dis/min/mL). Add 10 mL of concentrated HNO_3 and 5 mL of concentrated HF. Evaporate to dryness.

9.1.2.11. Transfer the sample to a 1000-mL beaker with 20 mL of 1:1 HNO_3. Dilute to 500 mL with distilled water.

9.2. Coprecipitation of actinides on cerium hydroxide.

9.2.1. Add 10 drops of 0.1% bromthymol blue, 1 mL of 30% H_2O_2, 0.5 mL of cerium nitrate (10 mg of Ce/mL), and enough concentrated NH_4OH to reach a blue endpoint to the solutions from Steps 9.1.1.5 and 9.1.2.11.

9.2.2. Add filter pulp and bring the solution to a boil. Cool the solution in a water bath.

9.2.3. Collect the precipitate on a 47-mm Metricel GA-6 filter paper and discard the supernate.

9.2.4. Place the filter in a 250-mL beaker. Add 2 mL of sodium and potassium sulfate solution, 2 mL of concentrated sulfuric acid, 2 mL of concentrated perchloric acid, and 5 mL of concentrated nitric acid. Heat to dryness on a hot plate.

9.2.5. Dissolve the residue in 20 mL of 2% HNO_3.

9.3. Coprecipitation of +4 elements on ceric iodate.

9.3.1. Transfer the sample into a 50-mL round-bottomed glass centrifuge tube using a minimum of water to complete the transfer.

9.3.2. Add 1 drop of 1% manganous sulfate hexahydrate and approximately 0.25 g of solid ammonium persulfate. Heat the samples in a hot water bath until the yellow ceric ion color and the purple permanganate color are fully developed. Continue heating for 10 min.

9.3.3. Cool the sample in a cold water bath. Add 10 mL of ammonium iodate solution, and allow the sample to stand for 5 min.

9.3.4. Centrifuge sample for 5 min at 2000 rpm.

9.3.5. Transfer the supernate, without rinsing the centrifuge tube, back into the 250-mL beaker and save for U, Pu, and Am determinations. Discard the precipitate.

9.4. Uranium determination.

9.4.1. Add 5 mL of concentrated hydrochloric acid and 1 mL of concentrated sulfuric acid to the supernate from the ceric iodate step.

9.4.2. Evaporate to dryness on a hot plate. Add 5 drops of concentrated sulfuric acid, and heat to a clear melt over the blast burner until bubbles stop forming.

9.4.3. Cool the sample on the hot plate to minimize thermal shock to the beaker; then cool to room temperature.

9.4.4. Add 20 mL of 2% HCl to the sample, and heat slowly on a steam bath for 5 min.

9.4.5. Transfer the sample to a 50-mL round-bottomed glass centrifuge tube with a minimum of water to complete the transfer.

9.4.6. Add 0.5 mL of neodymium chloride (10 mg of Nd/mL) and cool in a cold water bath.

9.4.7. Add 3 mL of ammonium fluoride solution, allow to stand for 10 min, and centrifuge for 5 min at 2000 rpm.

9.4.8. Add 1 mL of neodymium chloride (0.5 mg of Nd/mL) to the solution, and swirl gently to avoid disturbing the precipitate.

9.4.9. Allow the sample to stand for 10 min. Centrifuge for 5 min at 2000 rpm.

9.4.10. Decant the supernate into a 50-mL round-bottomed polycarbonate centrifuge tube and save for U determination.

9.4.11. Immediately add 2 mL of concentrated perchloric acid and 2 drops of 1% potassium dichromate to the precipitate and heat on a hot plate until the perchloric acid fumes. Cool and save for Pu and Am determinations.

9.4.12. Add 2 mL of concentrated hydrochloric acid, 1 drop of 0.1% safranine O and 3 drops of 10% titanium trichloride to the uranium sample in the polycarbonate centrifuge tube.

9.4.13. Add 0.1 mL of neodymium chloride (0.5 mg of Nd/mL) and 5 mL of concentrated hydrofluoric acid, swirling after each addition.

9.4.14. Heat the sample in a hot water bath for 10 min and cool. Prepare the sample for alpha spectrometry as described in Step 9.7.

9.5. Plutonium determination.

9.5.1. Heat the perchloric acid solution from Step 9.4.11 to boiling on the hot plate for 15 min. Cool and add 20 mL of 1% perchloric acid • 0.01% potassium dichromate solution. Cool in a cold water bath.

9.5.2. Add 5 mL of concentrated hydrofluoric acid containing 2 drops of 1% potassium dichromate with swirling, allow to stand for 10 min, and centrifuge at 2000 rpm for 5 min.

9.5.3. Add 1 mL of neodymium perchlorate (0.5 mg Nd/mL) and swirl gently to avoid disturbing the precipitate in the bottom of the centrifuge tube. Allow to stand for 10 min and centrifuge at 2000 rpm for 5 min.

9.5.4. Gently decant the supernate into a 50-mL round-bottomed polycarbonate centrifuge tube and save for Pu determination.

9.5.5. Immediately treat the precipitate with 1 mL of concentrated sulfuric acid and 2 mL of potassium and sodium sulfate solution. Heat the sample to a clear melt over the blast burner. Cool and save for Am determination.

9.5.6. Add 1 drop of 30% hydrogen peroxide to the plutonium sample in the polycarbonate centrifuge tube and heat in a hot water bath for 10 min.

9.5.7. Add 0.1 mL of neodymium chloride (0.5 mg of Nd/mL) to the sample with swirling; heat for 10 min in a hot water bath and cool.

9.5.8. Prepare the sample for alpha spectrometry as described in Step 9.7.

9.6. Americium determination.

9.6.1. Add 20 mL of 2% nitric acid, 1 drop of 0.2% silver nitrate, and 1 drop of 1% manganous sulfate hexahydrate to the melt from Step 9.5.5.

9.6.2. Heat in a hot water bath until the melt becomes solution. Add approximately 0.25 g of solid ammonium persulfate with swirling, and heat in a hot water bath until the purple permanganate color develops. Heat for another 15 min.

9.6.3. Cool the sample in a cold water bath, add 3 mL of ammonium fluoride solution (see Step 7.17 for special instructions), and allow to stand for 10 min. Centrifuge at 2000 rpm for 5 min.

9.6.4. Decant the supernate carefully, without rinsing, into a 50-mL round-bottomed polycarbonate centrifuge tube. Discard the precipitate. Repeat Steps 9.6.3 and 9.6.4 once.

9.6.5. Add 1 mL of 50% manganous sulfate hexahydrate to the supernate, and allow the sample to stand for 10 min.

9.6.6. Add 0.1 mL of neodymium perchlorate (0.5 mg Nd/mL) and 5 mL of concentrated hydrofluoric acid containing 2 drops of 1% potassium dichromate to the sample, swirling after each addition.

9.6.7. Allow the sample to stand for 10 min, and prepare for alpha spectrometry as described in Step 9.7.

9.7. Coprecipitation of Pu, Am, and U with neodymium fluoride.

9.7.1. Mount a 25-mm Tuffryn HT-200 membrane filter on a polysulfone twist-lock funnel.

9.7.2. With vacuum applied, add approximately 2 mL of 80% ethanol, 5 mL of substrate suspension (freshly treated for 15 min in the sonic bath), the sample (after vigorous swirling), a hot 5-mL aliquot of 20% hydrofluoric acid • 10% perchloric acid rinse of the centrifuge tube, a 5-mL water rinse of the filter, and a 2-mL 80% ethanol rinse of the filter.

9.7.3. Dry the filter for 5 min under a heat lamp at a distance of 12 to 16 in.

9.7.4. Submit the filter for alpha spectrometry.

10. Operation of the Alpha Spectrometer

10.1. Place the sample to be counted into the chamber of the alpha spectrometer.

10.2. Pump the chamber down to less than 200 millitorr.

10.3. Turn the **BIAS** switch **on**.

10.4. Select Canberra S100 MCA from the menu.

10.5. Clear old data with **CTRL E**.

10.6. Select **F11** to set time for count.

10.7. Select **F4** to collect data.

10.8. When data collection is finished, select **report** in the file menu.

11. Calculations

11.1. Count waste water samples for 60 min. Count filter cake samples for 10 min.

11.2. Plutonium.

11.2.1. Determine the counts for each of the three isotopes by integrating the counts in the channels for each energy spectrum.

11.2.2. Calculations are made using the following equations.

11.2.2.1. Determine the chemical recovery.

$$YPu = \frac{CPu2 - BPu2}{T \times D \times APu2} ,$$

where YPu = recovery factor for ^{242}Pu tracer,
CPu2 = ^{242}Pu gross counts,
BPu2 = ^{242}Pu background counts,
T = count length (min),
D = detector counting efficiency, and
APu2 = activity of ^{242}Pu tracer (dpm).

11.2.2.2. Determine the activity of ^{239}Pu and/or ^{238}Pu.

$$Pu239 = \frac{CPu9 - BPu9}{T \times D \times YPu \times V \times 2.22},$$

where Pu239 = ^{239}Pu activity (pCi/L or pCi/g),
CPu9 = ^{239}Pu gross counts,
BPu9 = ^{239}Pu background counts,
T = count length (min),
D = detector counting efficiency,
YPu = recovery factor for ^{242}Pu tracer,
V = sample volume (L) or weight (g), and
2.22 = factor to convert dpm to pCi.

$$Pu238 = \frac{CPu8 - BPu8}{T \times D \times YPu \times V \times 2.22},$$

where Pu238 = ^{238}Pu activity (pCi/L or pCi/g),
CPu8 = ^{238}Pu gross counts,
BPu8 = ^{238}Pu background counts,
T = count length (min),
D = detector counting efficiency,
YPu = recovery factor for ^{242}Pu tracer,
V = sample volume (L) or weight (g), and
2.22 = factor to convert dpm to pCi.

11.3. Americium.

11.3.1. Determine the counts for each of the isotopes by integrating the counts in the channels for each energy spectrum.

11.3.2. Calculations are made using the following equations.

11.3.2.1. Determine the chemical recovery.

$$YAm = \frac{CAm3 - BAm3}{T \times D \times AAm3},$$

where YAm = recovery factor for ^{243}Am tracer,
CAm3 = ^{243}Am gross counts,
BAm3 = ^{243}Am background counts,
T = count length (min),
D = detector counting efficiency, and
AAm3 = activity of ^{243}Am tracer (dpm).

11.3.2.2. Determine the activity of ^{241}Am.

$$Am241 = \frac{CAm1 - BAm1}{T \times D \times YAm \times V \times 2.22},$$

where Am241 = ^{241}Am activity (pCi/L or pCi/g),
CAm1 = ^{241}Am gross counts,
BAm1 = ^{241}Am background counts,
T = count length (min),
D = detector counting efficiency,
YAm = recovery factor for ^{243}Am tracer,
V = sample volume (L) or weight (g), and
2.22 = factor to convert dpm to pCi.

11.4 Uranium.

11.4.1. Determine the counts for each isotope by integrating the counts in the channels for each energy spectrum.

11.4.2. Calculations are made using the following equations.

11.4.2.1. Determine the chemical recovery.

$$YU = \frac{CU2 - BU2}{T \times D \times AU2},$$

where YU = recovery factor for ^{232}U tracer,
CU2 = ^{232}U gross counts,
BU2 = ^{232}U background counts,
T = count length (min),
D = detector counting efficiency, and
AU2 = activity of ^{232}U tracer (dpm).

11.4.2.2. Determine the activity of ^{234}U and/or ^{235}U.

$$U234 = \frac{CU4 - BU4}{T \times D \times YU \times V \times 2.22} ,$$

where U234 = ^{234}U activity (pCi/L or pCi/g),
CU4 = ^{234}U gross counts,
BU4 = ^{234}U background counts
T = count length (min),
D = detector counting efficiency,
YU = recovery factor for ^{232}U tracer,
V = sample volume (L) or weight (g), and
2.22 = factor to convert dpm to pCi.

$$U235 = \frac{CU5 - BU5}{T \times D \times YU \times V \times 2.22} ,$$

where U235 = ^{235}U activity (pCi/L or pCi/g),
CU5 = ^{235}U gross counts,
BU5 = ^{235}U background counts,
T = count length (min),
D = detector counting efficiency,
YU = recovery factor for ^{232}U tracer,
V = sample volume (L) or weight (g), and
2.22 = factor to convert dpm to pCi.

11.5 Uncertainty.

11.5.1. The standard deviation of the activity in the sample at the 95% confidence level is given by

$$SDPu9 = 1.96 \times Pu239 \times \sqrt{\frac{CPu9 + B}{(CPu9 - B)^2} + 0.003} ,$$

$$SDPu8 = 1.96 \times Pu238 \times \sqrt{\frac{CPu8 + B}{(CPu8 - B)^2} + 0.003} ,$$

$$SDAm1 = 1.96 \times Am241 \times \sqrt{\frac{CAm1 + B}{(CAm1 - B)^2} + 0.003} \quad ,$$

$$SDU4 = 1.96 \times U234 \times \sqrt{\frac{CU4 + B}{(CU4 - B)^2} + 0.003} \quad , \text{ and}$$

$$SDU5 = 1.96 \times U235 \times \sqrt{\frac{CU5 + B}{(CU5 - B)^2} + 0.003} \quad ,$$

where SDPu9 = standard deviation of ^{239}Pu activity,
Pu239 = ^{239}Pu activity (dpm/vol),
CPu9 = ^{239}Pu gross counts,
SDPu8 = standard deviation of ^{238}Pu activity,
Pu238 = ^{238}Pu activity (dpm/vol),
CPu8 = ^{238}Pu gross counts,
SDAm1 = standard deviation of ^{241}Am activity,
Am241 = ^{241}Am activity (dpm/vol),
CAm1 = ^{241}Am gross counts,
SDU4 = standard deviation of ^{234}U activity,
U234 = ^{234}U activity (dpm/vol),
CU4 = ^{234}U gross counts,
SDU5 = standard deviation of ^{235}U activity,
U235 = ^{235}U activity (dpm/vol),
CU5 = ^{235}U gross counts,
B = blank count for each respective nuclide,
1.96 = constant, and
0.003 = constant.

12. Proper Waste Disposal Practices

12.1. Solid waste.

12.1.1. Radiochemically contaminated waste.

12.1.1.1. Accumulate radiochemically contaminated solid waste, such as paper wipes, plastic pipettes, and plastic bottles, in a metal can which contains a cardboard box lined with a plastic bag. Do not place hazardous waste in this can.

12.1.1.2. Label the can with a radioactive waste label.

12.1.1.3. When the cardboard box is full, remove it from the can, seal with tape, and label as radioactive compactable waste. Store the waste in the laboratory pending disposal by the Waste Management group.

12.1.1.4. Place a new cardboard box and plastic bag in the waste can for continued use.

12.2. Liquid waste.

12.2.1. Dispose of liquid waste that is contaminated with radionuclides in a sink specifically approved for the disposal of aqueous radioactive waste and inorganic acids and bases.

12.3. Waste pickup.

12.3.1. Radioactively contaminated waste.

12.3.1.1. The surface exposure rate of the sealed box of radiochemically contaminated solid waste is determined by a radiation protection technician and is recorded on the Radioactive Solid Waste Disposal (RSWD) record form.

12.3.1.2. Request pickup by the Waste Management group of a full box of radiochemically contaminated solid waste using the current Chemical Waste Disposal Request (CWDR) form. The current Waste Profile Request Form (WPRF) that describes the waste is referenced on both disposal request forms.

12.3.1.3. The Waste Management group picks up the waste for disposal according to Laboratory policy.

13. Source Material

13.1. F. D. Hindman, *Anal. Chem.* **58**, 1238-1241 (1986).

13.2. "Low-Level Radioactive Solid Waste," Administrative Requirement 10-2, in *Environment, Safety, and Health Manual*, Los Alamos National Laboratory Manual, Chapter 1 (most recent edition).

13.3. "Hazardous and Mixed Waste," Administrative Requirement 10-3, in *Environment, Safety, and Health Manual*, Los Alamos National Laboratory Manual, Chapter 1 (most recent edition).

Revisions or additions to the procedure are marked (▒▒▒▒▒▒). Where a section heading is marked, the entire section has been revised.

STRONTIUM-89 AND STRONTIUM-90 IN WASTE WATER — ION EXCHANGE

Analyte: Strontium-89 and strontium-90	**Method No.:** WR190
Matrix: Waste water **Procedure:** Ion exchange and beta counting	**Minimum Detectable Activity:** ^{89}Sr 3 pCi/sample ^{90}Sr 2 pCi/sample **Accuracy and Precision:** (mean ± 1 sigma) ^{89}Sr 99% ± 9% ^{90}Sr 95% ± 4% **Acceptable Minimum Detectable Activity:** ^{89}Sr 300 pCi/L ^{90}Sr 30 pCi/L
Effective Date: 7/15/85	**Author:** Terry D. Filer

SAFETY NOTE: Before beginning this procedure, read all of the Material Safety Data Sheets for the chemicals listed in Sec. 7. Read Sec. 4.3 of the EM-9 Safety Manual for information on personal protective clothing and equipment. Read Sec. 12 of this procedure and Source Materials 13.5 and 13.6 for proper waste disposal practices.

1. Principle of Method

1.1. Strontium carrier is added to the water sample.

1.2. Strontium is complexed with disodium ethylenediamine tetraacetate and added to a cation-exchange resin.

1.3. After the ion-exchange separation, the eluted strontium is precipitated as the carbonate.

1.4. Strontium yield is measured gravimetrically, and radiostrontium is measured with a low-background beta counter.

1.5. After a 1- to 2-week ^{90}Y ingrowth period, the carbonate precipitate is redissolved and yttrium carrier is added.

1.6. Yttrium is precipitated as the hydroxide, redissolved, and precipitated as the oxalate.

1.7. Yttrium yield is measured gravimetrically, and radioyttrium is measured with a low-background beta counter.

1.8. Strontium-90 is determined by the amount of ^{90}Y present.

1.9. Strontium-89 is determined by the difference between the total radiostrontium and ^{90}Sr.

2. Sensitivity

2.1. Sensitivity is limited by the counter background.

2.2. For routine measurements with a 30-min counting period and a counting efficiency of 30%, the minimum detection limit (three times the standard deviation of the blank) is 2 pCi/sample for ^{90}Sr and 3 pCi/sample for ^{89}Sr (Laboratory notebook A004588, p. 66).

3. Accuracy and Precision

3.1. Add a primary standard ^{89}Sr (Amersham SMZ.64) to a series of waste water samples. Determine recovery of ^{89}Sr. Average recovery of ^{89}Sr tracer added to waste water samples is 99% ± 9% at the 500-pCi level (Laboratory notebook A004588, p. 67).

3.2. Add a primary standard ^{90}Sr (Amersham SIZ.64) to a series of waste water samples. Determine recovery of ^{90}Sr. Average recovery of ^{90}Sr added to waste water samples is 95% ± 4% at the 500-pCi level (Laboratory notebook A004588, p. 67).

4. Interferences

4.1. No interferences are found in typical samples.

5. Collection and Storage of Samples

5.1. Acidify liquid waste samples to approximately 1.0% with HNO_3 before analysis.

5.2. Analysis must be completed within six months.

6. Apparatus

6.1. Alpha/Beta/Gamma System: Canberra Model 2400, Canberra Industries, Inc., Meriden, Connecticut.

6.2. Beakers: 100-, 600-, and 1000-mL.

6.3. Graduated cylinders: 25- and 250-mL.

6.4. Ion-exchange column: glass column, 200-mm-long by 24-mm-o.d., with a reservoir at the top, 250-mm-long by 85-mm-o.d., and a 45° angled taper at the bottom, equipped with a standard taper stopcock.

6.5. Centrifuge tubes: 40-mL.

6.6. Centrifuge: variable speed (0 to 6000 rpm) equipped with timer; Damon/IEC Division.

6.7. Chemical fume hood.

6.8. Stirrer: Corning Model PC-351.

6.9. Magnetic stirring bars: 1-in., Teflon-coated.

6.10. Filter paper: 7.0-cm-diam, Whatman No. 541.

6.11. Filter paper: 2.4-cm-diam, Whatman GF/C.

6.12. Filter paper: 7.0-cm-diam, Whatman GF/C.

6.13. Vacuum filtering flask: 1000-mL.

6.14. Filtering chimney: 2.4-cm-diam, stainless steel.

6.15. Analytical balance: 0.0001- to 200-g capacity, Sartorius.

7. Reagents

7.1. EDTA (6%). Dissolve 120 g of disodium ethylenediaminetetraacetate in distilled water. Dilute to 2 L.

7.2. Calcium nitrate (2 M). Dissolve 236.2 g of $Ca(NO_3)_2 \bullet 4\ H_2O$ in distilled water. Dilute to 500 mL. Filter the solution through a Whatman GF/C, 7.0-cm-diam filter.

7.3. Sodium carbonate (3 N). Dissolve 159 g of Na_2CO_3 in distilled water. Dilute to 1 L.

7.4. Buffer (pH 4.6). Dissolve 200 g of anhydrous sodium acetate in 500 mL of distilled water. Add 385 mL of glacial acetic acid and dilute to 1 L.

7.5. Strontium carrier (20 mg/mL). Dissolve 48.31 g of reagent-grade $Sr(NO_3)_2$ in distilled water. Dilute to 1 L.

7.6. Yttrium carrier (30 mg/mL). Dissolve 32.31 g of reagent-grade $Y(NO_3)_3 \bullet 6\ H_2O$ in distilled water. Dilute to 250 mL.

7.7. Acetic acid (6 M). Dilute 340 mL of glacial acetic acid to 1 L with distilled water.

7.8. Sodium chromate (0.3 M). Dissolve 70.2 g of $Na_2CrO_4 \bullet 4\ H_2O$ in distilled water. Dilute to 1 L.

7.9. Hydrogen peroxide (30%).

7.10. Oxalic acid (saturated). Dissolve 25 g of oxalic acid dihydrate in 250 mL of water.

7.11. Sodium chloride (4 M). Dissolve 464 g of sodium chloride in distilled water. Dilute to 2 L.

7.12. Hydrochloric acid (1.8 M). Add 300 mL of concentrated hydrochloric acid to distilled water and dilute to 2 L.

8. Calibration and Standards

8.1. Strontium-90/yttrium-90 tracer.

8.1.1. The $^{90}Sr/^{90}Y$ stock solution is a standard reference material obtained from Amersham (SIZ.64).

8.1.2. The tracer solution is prepared in 10% HCl.

8.1.3. Concentration of the tracer is approximately 200 pCi/mL for both ^{90}Sr and ^{90}Y.

8.2. Strontium-89 tracer.

8.2.1. The ^{89}Sr stock solution is a standardized solution obtained from Amersham (SIZ.64).

8.2.2. The tracer solution is prepared in 10% HCl.

8.2.3. Concentration of the tracer is approximately 500 pCi/mL.

8.3. Calibration of the beta gas-flow proportional counter.

8.3.1. Yttrium-90 counting efficiency. A series of ^{90}Y standards and a blank are carried through the procedure (see Step 9.2) and counted in the beta gas-flow proportional counter. Calculate the ^{90}Y counting efficiency as follows.

8.3.1.1. Calculate the yttrium yield, YY.

$$YY = \frac{RY}{AY} ,$$

where YY = yttrium yield,
RY = Y carrier recovered as $Y_2(C_2O_4)_3 \bullet 9\ H_2O$ (g), and
AY = Y carrier added as $Y_2(C_2O_4)_3 \bullet 9\ H_2O$ (g).

8.3.1.2. Calculate the ^{90}Y decay factor, YD.

$$YD = e^{-(0.00018) \times T} ,$$

where YD = yttrium decay factor,
e = base of natural logarithms (2.718...),
0.00018 = λ (0.693/half-life), and
T = time between ^{90}Y separation from ^{90}Sr and ^{90}Y counting (min).

8.3.1.3. Calculate the ^{90}Y counting efficiency, CEY.

$$CEY = \frac{Y - BY}{CTY \times YY \times YD \times {}^{90}Y} ,$$

where CEY = ^{90}Y counting efficiency,
Y = ^{90}Y gross count,
BY = blank count,
CTY = counting time (min),
YY = Y yield,
YD = yttrium decay factor, and
^{90}Y = activity of ^{90}Y standard (dpm).

8.3.2. Calculate ^{90}Sr counting efficiency. A series of ^{90}Sr standards and a blank are carried through the procedure (see Steps 9.1.1 to 9.1.12) and counted in the beta gas-flow proportional counter. The ^{90}Sr counting efficiency is calculated using the following equations.

8.3.2.1. Calculate the Sr yield, SY.

$$SY = \frac{RSR}{ASR} ,$$

where SY = strontium yield,
RSR = Sr carrier recovered as $SrCO_3$ (g), and
ASR = Sr carrier added as $SrCO_3$ (g).

8.3.2.2. Calculate the yttrium growth factor, YG′.

$$YG' = e^{-(2.73 \times 10^{-6}) \times T_1} - e^{-(0.0108) \times T_1} ,$$

where YG′ = yttrium growth factor,
e = base of natural logarithms (2.718...),
2.73×10^{-6} = λ (0.693/half-life of ^{90}Sr in h),
0.0108 = λ (0.693/half-life of ^{90}Y in h), and
T_1 = time between initial ^{90}Sr separation from ^{90}Y and counting the $SrCO_3$ precipitate (h).

8.3.2.3. Calculate the yttrium contribution to the total count.

$$Y90 = {}^{90}Sr \times SY \times CEY \times YG' ,$$

where Y90 = cpm of ^{90}Y,
^{90}Sr = activity of ^{90}Sr standard (dpm),
SY = Sr yield,
CEY = ^{90}Y counting efficiency, and
YG′ = yttrium growth factor.

8.3.2.4. Calculate the strontium counts, Sr90.

$$Sr90 = \frac{TSR - BSR}{SY \times CTSR} - Y90 ,$$

where Sr90 = cpm of ^{90}Sr,
TSR = total Sr gross count,
BSR = blank count,

SY = Sr yield,
CTSR = counting time (min), and
Y90 = cpm of ^{90}Y.

8.3.2.5. Calculate the ^{90}Sr counting efficiency, CE90.

$$CE90 = \frac{Sr90}{^{90}Sr},$$

where CE90 = ^{90}Sr counting efficiency,
Sr90 = cpm of ^{90}Sr, and
^{90}Sr = activity of ^{90}Sr standard (dpm).

8.3.3. Strontium-89 counting efficiency. A series of ^{89}Sr standards and a blank are carried through Steps 9.1.1 to 9.1.12 and counted in the beta gas-flow proportional counter. The ^{89}Sr counting efficiency is calculated using the following equation:

$$CE89 = \frac{TSR - BSR}{CTSR \times SY \times {}^{89}Sr},$$

where CE89 = ^{89}Sr counting efficiency,
TSR = total Sr gross count,
BSR = blank count,
CTSR = counting time (min),
SY = Sr yield, and
^{89}Sr = activity of ^{89}Sr standard.

9. Procedure

9.1. Chemical isolation of strontium by ion exchange separation.

9.1.1. Filter 250 mL of a liquid waste sample that is 1.0% HNO_3. Add 2 mL of Sr carrier (20 mg/mL).

9.1.2. Add 2 mL of 2 M $Ca(NO_3)_2$.

9.1.3. Add 250 mL of 6% EDTA, and adjust the pH to 4.6 with NH_4OH.

9.1.4. Add 10 mL of pH 4.6 buffer, and adjust the pH to 4.6 with NH_4OH if necessary.

9.1.5. Prepare a resin column (40-mm by 24-mm) using AG 50W-x8, 50- to 100-mesh, hydrogen-form cation-exchange resin. Wash the column with 100 mL of water, 300 mL of 4 M NaCl, and 100 mL of water.

9.1.6. Add the solution from Step 9.1.4 to the ion exchange column. Adjust the flow to 12 mL/min.

9.1.7. Prepare a wash solution by combining 125 mL of 6% EDTA with 250 mL of water. Adjust the pH to 5.1 with NH_4OH.

9.1.8. Wash the column at 12 mL/min. Discard all effluents. Record this time as the beginning of ^{90}Y ingrowth.

9.1.9. Wash the columns with 100 mL of water at 12 mL/min. Discard the wash.

9.1.10. Add 280 mL of 1.8 N HCl to the column and elute at 8 mL/min. Discard the first 30 mL of effluent. Collect the next 250 mL.

9.1.11. Add 125 mL of concentrated NH_4OH to the effluent and stir with a magnetic stirrer. Slowly add 10 mL of 3 N Na_2CO_3 and stir for 30 min.

9.1.12. Collect the $SrCO_3$ precipitate on a weighed GF/C, 2.4-cm-diam filter. Wash the precipitate with water and ethanol. Dry and weigh. Count the Sr in the beta gas-flow proportional counter to obtain the total radio-strontium concentration. Record the time when the $SrCO_3$ precipitate is counted.

9.2. Isolation of yttrium-90 daughter.

9.2.1. After a 1- to 2-week ^{90}Y ingrowth period, place the $SrCO_3$ precipitate in a 40-mL centrifuge tube.

9.2.2. Add 10 drops of concentrated HCl and 10 mL of water to the tube.

9.2.3. Add 1 mL of 6 M acetic acid and 1.00 mL of yttrium carrier (30 mg/mL).

9.2.4. Filter the solution through Whatman No. 541, 7.0-cm-diam filter paper into another 40-mL centrifuge tube. Wash the first tube with 5 mL of water and add to the filter in the second centrifuge tube.

9.2.5. Add 0.1 mL of 0.3 M Na_2CrO_4 and place in a hot water bath.

9.2.6. Adjust samples to pH 8 by adding NH_4OH until a precipitate forms.

9.2.7. Add 6 drops of 30% H_2O_2 and heat in a water bath for 1 h.

9.2.8. Adjust the pH to 8 with NH_4OH.

9.2.9. Centrifuge for 5 min at 2400 rpm. Record the hour and date to determine the decay of ^{90}Y. Discard the supernate.

9.2.10. Dissolve the precipitate by adding 6 drops of concentrated HCl. Dilute with 15 mL of water.

9.2.11. Add NH_4OH dropwise until a precipitate forms. Heat for 15 min in a hot water bath.

9.2.12. Centrifuge at 2400 rpm for 5 min. Discard the supernate.

9.2.13. Dissolve the precipitate by adding 5 drops of concentrated HCl, stirring and adding 25 mL of distilled water.

9.2.14. Place in a water bath, add 1 mL of saturated oxalic acid and 2 to 3 drops of NH_4OH. Heat for 15 min.

9.2.15. Adjust the pH to 2 to 3 with additional NH_4OH if needed.

9.2.16. Digest in a hot water bath for 1 h.

9.2.17. Cool. Then collect the precipitate on a weighed GF/C, 2.4-cm-diam filter. Wash with water and then with ethanol.

9.2.18. Count the precipitate in a beta gas-flow proportional counter. Record the time of counting.

10. Operation of Equipment

10.1. Refer to the operating manual for the Alpha/Beta/Gamma System Model 2400.

11. Calculations

11.1. Strontium-90.

11.1.1. Determine the Sr yield.

$$SY = \frac{RSR}{ASR} ,$$

where SY = Sr yield,
RSR = Sr carrier recovered as $SrCO_3$ (g), and

ASR = Sr carrier added as $SrCO_3$ (g).

11.1.2. Determine the Y yield.

$$YY = \frac{RY}{AY} ,$$

where YY = yttrium yield,
RY = Y carrier recovered as $Y_2(C_2O_4)_3 \bullet 9H_2O$ (g), and
AY = Y carrier added as $Y_2(C_2O_4)_3 \bullet 9H_2O$ (g).

11.1.3. Determine the Y growth.

$$YG = e^{-(2.73 \times 10^{-6})T_2} - e^{-(0.0108)T_2} ,$$

where YG = yttrium growth,
e = base of natural logarithms (2.718...),
2.73×10^{-6} = λ (0.693/half-life of ^{90}Sr in h),
0.0108 = λ (0.693/half-life of ^{90}Y in h), and
T_2 = time between the initial ^{90}Sr separation and the separation of ^{90}Y daughter (h).

11.1.4. Determine the Y decay.

$$YD = e^{-(0.0108)T_3} ,$$

where YD = yttrium decay and
T_3 = time between the separation and the counting of the ^{90}Y daughter (h).

11.1.5. Determine the ^{90}Sr in the sample.

$$S90 = \frac{Y - BY}{CTY \times CEY \times MC \times V \times SY \times YY \times YG \times YD} ,$$

where S90 = ^{90}Sr activity (pCi/L),
Y = ^{90}Y gross count,
BY = blank count,
CTY = counting time (min),
CEY = ^{90}Y counting efficiency,
MC = 2.22,

V = sample volume (L),
SY = Sr yield,
YY = Y yield,
YG = ^{90}Y growth, and
YD = ^{90}Y decay.

11.1.6. Determine the uncertainty in the ^{90}Sr activity measurement at the 95% confidence level by propagation of errors for each measurement.

$$U90 = 1.96 \times S90 \times \sqrt{\frac{(Y + BY)}{(Y - BY)^2} + 0.0036} \quad ,$$

where U90 = uncertainty in ^{90}Sr measurement,
1.96 = constant,
S90 = ^{90}Sr activity in the sample (pCi/L),
Y = ^{90}Y gross count,
BY = Y blank count, and
0.0036 = constant.

11.2. Strontium-89

11.2.1. Calculate ^{90}Y growth correction.

$$YG' = e^{-(2.73 \times 10^{-6})T_1} - e^{-(0.0108)T_1} \quad ,$$

where YG′ = ^{90}Y growth correction,
e = base of natural logarithms (2.719...),
2.73×10^{-6} = λ (0.693/half-life of ^{90}Sr in h),
T_1 = time between initial Sr separation and counting of Sr CO_3 precipitate (h), and
0.0108 = λ (0.693/half-life of ^{90}Y in h).

11.2.2. Calculate ^{89}Sr, cpm.

11.2.2.1. Calculate ^{90}Sr, cpm.

$$Sr90' = S90 \times CE90 \times MC \times SY \quad ,$$

where Sr90′ = ^{90}Sr (cpm),
S90 = ^{90}Sr activity (pCi/L),
CE90 = ^{90}Sr counting efficiency,

MC = 2.22, and
SY = Sr yield.

11.2.2.2. Calculate ^{90}Y, cpm.

$$Y90' = S90 \times MC \times V \times SY \times CEY \times YG' \quad ,$$

where Y90′ = ^{90}Y (cpm),
S90 = ^{90}Sr activity (pCi/L),
MC = 2.22,
V = sample volume (L),
SY = Sr yield,
CEY = ^{90}Y counting efficiency, and
YG′ = ^{90}Y growth correction.

11.2.2.3. Calculate the 89Sr, cpm.

$$Sr89' = \frac{TSR - BSR}{CTSR} - Sr90' - Y90' \quad ,$$

where Sr89′ = ^{89}Sr (cpm),
TSR = total Sr gross count,
BSR = Sr blank count,
CTSR = counting time (min),
Sr90′ = ^{90}Sr (cpm), and
Y90′ = ^{90}Y (cpm).

11.2.3. Determine the concentration of ^{89}Sr in the sample.

$$S89 = \frac{Sr89'}{CE89 \times MC \times V \times SY} \quad ,$$

where S89 = ^{89}Sr in the sample (pCi/L),
Sr89′ = ^{89}Sr (cpm),
CE89 = ^{89}Sr counting efficiency,
MC = 2.22,
V = sample volume (L), and
SY = Sr yield.

11.2.4. Determine the uncertainty in the ^{89}Sr measurement at the 95% confidence level by propagation of errors in each measurement.

11.2.4.1. Calculate the uncertainty in ^{90}Sr activity (cpm).

$$A = Sr90' \times \sqrt{\frac{Y + BY}{(Y - BY)^2} + 0.0091} \quad ,$$

where A	=	uncertainty in ^{90}Sr (cpm),
Sr90′	=	^{90}Sr (cpm),
Y	=	^{90}Y gross count,
BY	=	Y blank count, and
0.0091	=	constant.

11.2.4.2. Calculate the uncertainty in ^{90}Y activity (cpm).

$$B = Y90' \times \sqrt{\frac{Y + BY}{(Y - BY)^2} + 0.0042} \quad ,$$

where B	=	uncertainty in ^{90}Y (cpm),
Y90′	=	^{90}Y (cpm),
Y	=	^{90}Y gross count,
BY	=	Y blank count, and
0.0042	=	constant.

11.2.4.3. Calculate the uncertainty in total Sr activity.

$$Sr = \frac{TSR - BSR}{CTSR} \quad ,$$

where Sr	=	total Sr (cpm),
TSR	=	total Sr gross count,
BSR	=	blank count, and
CTSR	=	counting time (min).

$$C = Sr \times \sqrt{\frac{(TSR + BSR)}{(TSR - BSR)^2} + 0.000001} \quad ,$$

where C	=	uncertainty in total Sr (cpm),
Sr	=	total Sr (cpm),
TSR	=	total Sr gross count,

BSR = blank count, and
0.000001 = constant.

11.2.4.4. Calculate the uncertainty in ^{89}Sr activity (cpm).

$$USr89 = \sqrt{A^2 + B^2 + C^2} \quad ,$$

where USr89 = uncertainty in ^{89}Sr (cpm),
A = uncertainty in ^{90}Sr (cpm),
B = uncertainty in ^{90}Y (cpm), and
C = uncertainty in total Sr (cpm).

11.2.4.5. Calculate the uncertainty in ^{89}Sr activity (pCi/L) at the 95% confidence level.

$$U89 = 1.96 \times S89 \times \sqrt{\frac{(USr89)^2}{(Sr89')^2} + 0.0091} \quad ,$$

where U89 = uncertainty in ^{89}Sr (pCi/L),
1.96 = constant,
S89 = ^{89}Sr in the sample (pCi/L),
USr89 = uncertainty in ^{89}Sr (cpm),
Sr89′ = ^{89}Sr (cpm), and
0.0091 = constant.

12. Proper Waste Disposal Practices

12.1. Solid waste.

12.1.1. Radiochemically contaminated waste.

12.1.1.1. Accumulate radiochemically contaminated solid waste, such as paper wipes, plastic pipettes, and plastic bottles, in a metal can which contains a cardboard box lined with a plastic bag. Do not place hazardous waste in this can.

12.1.1.2. Label the can with a radioactive waste label.

12.1.1.3. When the cardboard box is full, remove it from the can, seal with tape, and label as radioactive compactable waste. Store the waste in the laboratory pending disposal by the Waste Management group.

12.1.1.4. Place a new cardboard box and plastic bag in the waste can for continued use.

12.2. Liquid waste.

12.2.1. Dispose of liquid waste contaminated with radionuclides in a sink specifically approved for the disposal of aqueous radioactive waste and inorganic acids and bases.

12.3. Waste pickup.

12.3.1. Radioactively contaminated waste.

12.3.1.1. The surface exposure rate of the sealed box of radiochemically contaminated solid waste is determined by a radiation protection technician and is recorded on the Radioactive Solid Waste Disposal (RSWD) record form.

12.3.1.2. Request pickup by the Waste Management group of a full box of radiochemically contaminated solid waste using the current Chemical Waste Disposal Request (CWDR) form. The current Waste Profile Request Form (WPRF) which describes the waste is referenced on both disposal request forms.

12.3.1.3. The Waste Management group picks up the waste for disposal according to Laboratory policy.

13. Source Materials

13.1. C. R. Porter, N. W. Carter, G. L. Rehnberg, E. W. Pepper, and B. Kahn, *Determination of Radiostrontium in Food and Other Environmental Samples*, 1965.

13.2. *EML Procedures Manual*, 25th ed., H. L. Volchok and G. de Planque, Eds. (Environmental Measurements Laboratory, US Department of Energy, New York, New York, 1982).

13.3. *Analytical Chemistry Branch Procedures Manual*, L. Z. Bodnar and D. R. Percival, Eds. (Radiological and Environmental Sciences Laboratory, US Department of Energy, Idaho Falls, Idaho, 1982).

13.4. *Alpha/Beta/Gamma System Model 2400 Operator's Manual* (Canberra Industries, Inc., Meriden, Connecticut, 1987).

13.5. "Low-Level Radioactive Solid Waste," Administrative Requirement 10-2, in *Environment, Safety, and Health Manual*, Los Alamos National Laboratory Manual, Chapter 1 (most recent edition).

13.6. "Hazardous and Mixed Waste," Administrative Requirement 10-3, in *Environment, Safety, and Health Manual*, Los Alamos National Laboratory Manual, Chapter 1 (most recent edition).

Revisions or additions to the procedure are marked (▒▒▒▒▒▒). Where a section heading is marked, the entire section has been revised.

TRITIUM IN WASTE WATER AND OIL — LIQUID SCINTILLATION COUNTING

Analyte: Tritium	**Method No.:** WR200
Matrix: Waste water, oils	**Minimum Detectable Activity:** 3 pCi/mL
Procedure: Liquid scintillation counting	**Accuracy and Precision:** (mean ± 1 sigma) 101% ± 1% at the 5-nCi/mL level
	Acceptable Minimum Detectable Activity: 3 nCi/mL
Effective Date: 12/16/85	**Author:** Terry D. Filer

SAFETY NOTE: Before beginning this procedure, read all of the Material Safety Data Sheets for the chemicals listed in Sec. 7. Read Sec. 4.3 of the EM-9 Safety Manual for information on personal protective clothing and equipment. Read Sec. 12 of this procedure and Source Materials 13.3 and 13.4 for proper waste disposal practices.

1. Principle of Method

1.1. The sample is pipetted directly into a glass liquid-scintillation vial to which a scintillation solution is added.

1.2. The sample is counted for 20 min in a liquid scintillation spectrometer.

2. Sensitivity

2.1. Sensitivity is limited by count length and the detector background.

2.2. For routine measurements with a 20-min count length, the minimum detection limit (three times the standard deviation of the blank) is 3 pCi/mL, based on a sample size of 2 mL (Laboratory notebook A004591, p. 42).

3. Accuracy and Precision

3.1. Calculate routine performance data by dividing the result on each individual QA analysis by the certified value and summarizing by calculating a mean ratio ± 1 standard deviation.

3.2. The mean value of the ratio of the QA result compared with the certified value is 101% ± 1% (Laboratory notebook A004591, p. 42).

4. Interferences

4.1. No interferences have been shown in routine samples.

5. Collection and Storage of Samples

5.1. Collect samples in polyethylene bottles that are free of contamination.

5.2. No refrigeration is required.

5.3. Analysis must be completed within six months.

6. Apparatus

6.1. Packard Tri-Carb Liquid Scintillation Counter: Model 3255, Packard Instrument Co., Downers Grove, Illinois.

6.2. Glass scintillation counting vials: 25-mL with plastic caps.

6.3. Pipettes: 2-mL, volumetric.

6.4. Filter apparatus: for 0.45-micron membrane filters.

7. Reagents

7.1. Liquid scintillation cocktail: United Technologies Packard Opti-Fluor, Packard Instrument Co., Inc.

8. Calibration and Standards

8.1. The ^{3}H standard supplied by Packard Instrument Co. has been calibrated against a National Institue of Standards and Technology primary standard.

8.2. Prepare a series of primary ^{3}H standards in the range of 500 pCi/mL to 2 nCi/mL from a NIST primary standard, 4926-C.

8.3. Include a distilled water blank, the Packard ^{3}H standard, a Packard background standard, and four primary ^{3}H standards with each set of routine samples analyzed.

8.4. Determine the sample counting efficiency by using the external standard channels ratio (ESR) method. A set of ^{3}H standards is provided by Packard for this purpose. See *Packard Model 3255 Liquid Scintillation Spectrometer System Instruction Manual*, Step 3.4.4. Plot ESR vs. efficiency.

9. Procedure

9.1. Filter the water sample through a 0.45-micron membrane filter with suction. Oil samples are not filtered.

9.2. Pipette 2.0 mL of filtrate into a 25-mL glass scintillation vial.

9.3. Add 16.0 mL of Opti-Fluor cocktail to the glass scintillation vial.

9.4. Shake the vial vigorously for 10 s.

9.5. Place sample, blank, and standard vials in the liquid-scintillation spectrometer, and count each vial for 20 min.

10. Operation of the Liquid Scintillation Spectrometer

10.1. Refer to the operating manual for the liquid scintillation spectrometer.

11. Calculations

11.1. Sample counting efficiency. The sample counting efficiency is found by using the ESR printed out for each sample. Read the efficiency from the ESR vs efficiency plot (see Step 8.4).

11.2. Determine the concentration of ^3H in the sample.

$$A = \frac{\dfrac{C_s}{CT_s \times E_s} - \dfrac{C_b}{CT_b \times E_b}}{V \times 2.22} ,$$

Definition	Factor Symbol	Value	Percent Uncertainty
pCi/mL of ^3H	A	Variable	Variable
Gross counts, sample	C_s	Variable	Variable
Gross counts, background	C_b	About 25 cpm	4
Counting time, sample	CT_s	Usually 20 min	0.1
Counting time, background	CT_b	20 min	0.1
Efficiency, sample	E_s	0.2 to 0.5	1
Efficiency, background	E_b	0.6	1
Volume of sample	V	2 mL	1
(2.22 = factor to convert dpm to pCi)			

11.3. Uncertainty. The uncertainty U is calculated at the 95% confidence level.

$$U = 1.96 \times A \times \sqrt{\frac{C_s + C_b}{(C_s - C_b)^2} + 0.0002} \quad ,$$

where U = uncertainty,
1.96 = constant,
A = concentration of ^3H (pCi/mL),
C_s = gross counts of sample,
C_b = gross counts of background, and
0.0002 = constant.

12. Proper Waste Disposal Practices

12.1. Solid waste.

12.1.1. Radiochemically contaminated waste.

12.1.1.1. Accumulate radiochemically contaminated solid waste, such as paper wipes, plastic pipettes, and plastic bottles, in a metal can which contains a cardboard box lined with a plastic bag. Do not place hazardous waste in this can.

12.1.1.2. Label the can with a radioactive waste label.

12.1.1.3. When the cardboard box is full, remove it from the can, seal with tape, and label as radioactive compactable waste. Store the waste in the laboratory pending disposal by the Waste Management group.

12.1.1.4. Place a new cardboard box and plastic bag in the waste can for continued use.

12.2. Liquid waste.

12.2.1. Dispose of water waste that is contaminated with radionuclides in a sink specifically approved for the disposal of aqueous radioactive waste and inorganic acids and bases.

12.3. Waste pickup.

12.3.1. Radioactively contaminated waste.

12.3.1.1. The surface exposure rate of the sealed box of radiochemically contaminated solid waste is determined by a radiation protection technician and is recorded on the Radioactive Solid Waste Disposal (RSWD) record form.

12.3.1.2. Request pickup by the Waste Management group of a full box of radiochemically contaminated solid waste using the current Chemical Waste Disposal Request (CWDR) form. The current Waste Profile Request Form (WPRF) that describes the waste is referenced on both disposal request forms.

12.3.1.3. The Waste Management group picks up the waste for disposal according to Laboratory policy.

13. Source Materials

13.1. *Packard Model 3255 Liquid Scintillation Spectrometer System Instruction Manual* (Packard Instrument Co., Inc., Downers Grove, Illinois, 1977).

13.2. J. A. Gibbs, L. J. Everett, and D. Moore, *Sample Preparation for Liquid Scintillation Counting* (Packard Instrument Co., Inc., Downers Grove, Illinois, 1976).

13.3. "Low-Level Radioactive Solid Waste," Administrative Requirement 10-2, in *Environment, Safety, and Health Manual*, Los Alamos National Laboratory Manual, Chapter 1 (most recent edition).

13.4. "Hazardous and Mixed Waste," Administrative Requirement 10-3, in *Environment, Safety, and Health Manual*, Los Alamos National Laboratory Manual, Chapter 1 (most recent edition).

Revisions or additions to the procedure are marked (▒▒▒▒). Where a section heading is marked, the entire section has been revised.

CONTENTS

Preface CR-3

Acknowledgements CR-5

Abstract CR-7

The page numbering convention used in this manual consists of the specific procedure number (shown at left in list below) followed by the page number for that procedure. Thus, CR110-2 is page two of procedure CR110. The right column in the list below gives each procedure's status or effective date.

Count Room Procedures

CR100 Operating the 16, 32, 48, 64, 80, 96, and 112 Alpha Spectrometers 10/93

CR110 Alpha Program—Background and Calibration Data 09/93

CR130 Assigned Channels for Plutonium Isotopes—Alpha Spectrometry 09/93

CR140 Assigned Channels for Uranium and Thorium Isotopes—Alpha Spectrometry 09/93

CR150 Fecal Samples by the Phoswich Detector ..... In Progress

CR160 Single Alpha Spectroscopy 09/93

CR180 Liquid Scintillation Counting System 09/93

CR200 Alpha Gas-Flow Proportional Counting System ..... In Progress

CR240 Error Diagnostics for the Alpha-Counting Facility 10/93

CR370 Filling the HPGe Detector Systems with Liquid Nitrogen 10/93

CR380 Calibrating the HPGe Detector Systems ..... In Progress

CR390 Performance Verification for the HPGe Detector Systems 10/93

CR400 Standard Analysis for the HPGe Detector Systems 10/93

CR410	Operating the Tennelec LB5100 Gross Alpha/Beta Proportional Counting System	10/93
CR420	Data Reduction for the Tennelec LB5100 Gross Alpha/Beta Gas-Flow Proportional Counting System	10/93
CR430	Operating the NaI(Tl) Well Crystal Counting System	In Progress
CR440	Data Reduction for the NaI(Tl) Well Counting System	In Progress
CR450	Calibrating the Oxygen Sensor for the Gamma-Counting Facility	In Progress
CR500	Operating the Tennelec LB4000	In Progress

PREFACE

The Chemical Science and Technology division is engaged in work to identify hazards to workers and to the environment at Los Alamos National Laboratory. Decisions that must be made in this respect depend upon the availability of sound analytical data, which in turn depends on consistent and accurate procedures for measuring the presence and concentration of hazardous substances.

The analytical methods used by the Environmental Chemistry group support the Laboratory's monitoring activities by documenting compliance with appropriate standards, identifying trends, providing information for the public, and contributing to general knowledge. These methods measure the concentration of the desired analytes with the precision, accuracy, and specificity required by our customers.

As part of the overall quality control documentation effort to support the environment, safety, and health programs of the Laboratory, this section of the manual presents the Environmental Chemistry group's count room procedures. These procedures were developed by Environmental Chemistry staff or were modified from instrument operator's manuals. Each procedure is presented in a simple and concise manner. We hope that any knowledgeable analyst will be able to use these written procedures.

The manual is prepared in loose-leaf form to allow for revisions and additional procedures or data sheets. We welcome requests for clarification or for help in resolving any difficulties you encounter while using these procedures.

ACKNOWLEDGEMENTS

We appreciate the encouragement and leadership offered by Environmental Chemistry group management in supporting this effort.

The contributions of the following individuals were instrumental in developing, evaluating, or writing the methods contained here:

George H. Brooks
Anthony Sanchez
Hal Ide
Yolanda Giles
Bob B. Bates Jr.

Margaret A. Gautier
Editor

Count Room Procedures

Edited by

Margaret A. Gautier

ABSTRACT

As part of the overall quality control effort to support the environment, safety, and health programs at Los Alamos National Laboratory, this section of the manual documents the procedures for count room analyses used by the Laboratory's Environmental Chemistry group. The procedures were developed by our staff or were modified from instrument operator's manuals. Tested by chemists and technicians in our group to show their validity, these methods measure the concentration of the desired analytes with the precision, accuracy, and specificity required by our customers. The procedures require equipment and techniques available in modern analytical laboratories. Where such data is available, we provide precision and accuracy statements. Each procedure is presented in a simple and concise manner and includes interferences, apparatus, reagent preparation, calibration methods, and data-reduction formulas.

OPERATING THE 16, 32, 48, 64, 80, 96, AND 112 ALPHA SPECTROMETERS

Procedure: Operating the 16, 32, 48, 64, 80, 96, and 112 Alpha Spectrometers	**Method No.:** CR100
Effective Date: 08/01/90	**Authors:** George Brooks Anthony Sanchez Hal Ide

1. Introduction

1.1. The alpha spectrometers use solid-state detectors to identify alpha particles. The detectors depend on the production of free-charge carriers within a silicon diode by the interaction of the incident particles with bound electrons. In an ionization chamber, the incident particle produces electron-ion pairs; in a solid, the incident particle produces electron-hole pairs. Detection of the incident particle is then a problem of collecting the liberated charge by application of an electric field.

1.2. Each of seven identical alpha-counting systems consists of the following:

1.2.1. Sixteen Canberra solid-state silicon surface barrier detectors, series B, model BA19-300-100, with a 300 mm^2 active surface plane.

(Exception: The 64 and 80 alpha systems use series B, model BA 19-450-100, with a 450-mm^2 active surface plane.)

1.2.2. Sixteen Canberra preamplifiers, model 7404-01CS.

1.2.3. Sixteen EG&G Ortec bias amplifiers, model 408A.

1.2.4. Canberra multichannel analyzer, model Series 35 Plus, with 4096 channels.

1.2.5. Hewlett Packard dc power supply, model 6209B.

1.2.6. Voltage divider.

1.2.7. Router input, Los Alamos National Laboratory model 8193.

1.2.8. Linear mixer, Los Alamos National Laboratory model 8192.

1.2.9. Router coupler, Los Alamos National Laboratory model 8196.

1.2.10. Interconnection module.

1.2.11. Dual sum and invert, EG&G Ortec model 533.

1.2.12. Pirani vacuum gauge, type 6P110.

1.2.13. Vacuum pump, Welch Duo-Seal model 1405B.

2. System Setup

2.1. Sample placement.

2.1.1. Using forceps, place the sample on the brass or plastic pedestal in the vacuum chamber. (Exception: The 64, 80, and 96 alpha systems do not have pedestals. The samples are placed directly on planchets.)

2.1.2. Place the top of the chamber down on the O-ring seal.

2.1.3. Turn the vacuum valve to the left.

2.1.4. Turn **on** both **HIGH VOLTAGE** switches on the high-voltage divider panel.

2.2. Analyzer switch settings.

2.2.1. Set **VERTICAL RANGE** at **256** or other as desired.

2.2.2. Set **MEMORY** at **1/1**.

2.3. External ADC.

2.3.1. Set **GAIN** and **RANGE** at **256**.

2.3.2. Place all offset switches in **down** position.

2.3.3. Set **LLD** at **010**.

2.3.4. Set delayed switch in **up** (auto) position.

2.3.5. Set **PHA** in **up** position.

2.3.6. Set **COINC** in **up** position.

2.4. Bias amplifier.

2.4.1. Set **BIAS** level at approximately **450** for Pu and Am and at **350** for U and Th. Set **COARSE GAIN** at **x 5** and **x 2**.

2.4.2. Set **FINE GAIN** at approximately **800** for Pu and Am and at **1100** for U and Th.

2.5. Detector high-voltage meter.

2.5.1. Set **HIGH VOLTAGE** to **320**.

2.5.2. Set **M/A** to **95**.

2.6. Individual detector high voltage.

2.6.1. Set as specified on the manufacturer's specification sheet (50-100 volts).

3. Routine Counting Procedures for Samples, Backgrounds, and Calibration Sets

3.1. After the vacuum is turned on, periodically twist the chamber tops to assure proper seating on the O-rings.

3.2. Allow at least 10 min for vacuum pulldown before turning on the analyzer.

3.3. Routine counting times.

3.3.1. Samples (16, 32, 48, 96): 70,000 s.
(64, 80): 80,000 s.

3.3.2. Calibrations: 1020 s.

3.3.3. Backgrounds (16, 32, 48, 96): 70,000 s.
(64, 80): 80,000 s.

3.4. Select desired counting time.

3.4.1. Press **CLEAR DATA** and **CLEAR TIME AND PRESET** memory **1/1**.

3.4.2. Enter desired count length in seconds on touch pad.

3.4.3. Press **STORE** then **YES**.

3.4.4. Turn **MEMORY** switch to **1/2**.

3.4.5. Press **CLEAR DATA** and **CLEAR TIME AND PRESET**.

3.4.6. Enter desired count length in seconds on touch pad.

3.4.7. Press **STORE** then **YES**.

3.4.8. Turn **MEMORY** switch to **2/2**.

3.4.9. Enter desired count length in seconds on touch pad.

3.4.10. Press **STORE** then **YES**.

3.5. If counting 16, 32, or 64 alpha only, turn **MEMORY** switch to **1/2**.

3.5.1. Press **CLEAR DATA** and **CLEAR TIME AND PRESET**.

3.5.2. Select **MEMORY 1/1** and press **COLLECT** to start count.

3.5.3. Switch to **MEMORY 1/2** to examine data set in first half of MCA memory.

3.6. If counting 48, 80, or 96 alpha only, turn **MEMORY** switch to **2/2**.

3.6.1. Press **CLEAR DATA** and **CLEAR TIME AND PRESET**.

3.6.2. Switch **MEMORY** to **1/1** and press **COLLECT** to start count.

3.6.3. Switch **MEMORY** to **2/2** to examine data set.

3.7. If counting both 16, 32, 64 and 48, 80, 96 alpha, turn **MEMORY** switch to **1/1**.

3.7.1. Press **CLEAR DATA** and **CLEAR TIME AND PRESET**.

3.7.2. Press **COLLECT**.

3.8. Record all pertinent information concerning the samples in the count room Laboratory notebook.

3.9. Record sample notebook identification on cardboard sample planchet container.

4. Transfer of Data from the Analyzers to the PC Floppy, Memory 1/2

4.1. Place a floppy disk in side A of the IBM PC.

4.2. Erase floppy disk by typing DEL A:*.* ‹CR›.

4.3. Machine prompts DO YOU WANT TO DELETE ALL FILES?:
Type YES.

4.4. Type VTERM MCA for each set of data.

4.5. Press **F5** twice.

4.6. Type A:SAI.OLD or A;SA3.OLD or A:SA6:OLD.

4.7. Press **F5** twice.

4.8. Press ALT and T simultaneously, then ‹CR›, to initiate transfer.

4.9. Turn analyzer select knob A to 4th position (16 and 96 alpha) or 3rd positon (32 and 48 alpha) or 1st position (64 and 80 alpha).

4.10. Turn **MEMORY** switch to **1/2** to transfer data from 16, 32, or 48 alpha.

4.11. Press **READOUT** on MCA.

4.12. Press **YES** on MCA.

4.13. After data transfer is completed, press ALT and K simultaneously, then ‹CR›.

5. Transfer of Data from Analyzers to PC Floppy, Memory 2/2

5.1. Type VTERM MCA for each set of data.

5.2. Press **F5** twice.

5.3. Type A:SA9.OLD or A:SA4.OLD or A:SA8.OLD.

5.4. Press **F5** twice.

5.5. Press ALT and T simultaneously, then ‹CR›.

5.6. Turn analyzer select knob A to 4th position (16 and 96 alpha) or 3rd positon (32 and 48 alpha) or 1st position (64 and 80 alpha).

5.7. To transfer data from 96, 48, or 80 alpha, turn **MEMORY** switch to **2/2**.

5.8. Press **READOUT** on MCA.

5.9. Press **YES** on MCA.

5.10. After data transfer, press ALT and T on the PC simultaneously, then ‹CR›.

6. Transfer from the Analyzer and Subsequent Editing of Each Data Set

6.1. Example: On the PC, type FIXCRLF <A:SAI.OLD >A:SAI132 ‹CR›.

6.2. Type EDLIN A:SAI132 ‹CR›.

Example:

1. Type 1I‹CR› to begin editing session on line 1 of the data file.

2. Response: 1i*. Type (begin with 4 spaces) 105.009 16 ALPHA TISSUE SET LW-T-86 PU, SA1132, 7/8/86 ‹CR›.

3. Response: 2i*. Type 016 131 LW
where 016 131 = detector bank and digital day, and LW denotes the analyst.

4. Response: *. Press CTRL and SCROLL simultaneously, then ‹CR›.

5. Response: *3D. Type ‹CR› (deletes third line from output).

6. Response: *E. Type ‹CR› (exits from program).

6.3. DEL(1 space) A:SA1:OLD ‹CR›.

6.4. DEL (1 space) A:SA1132.BAK ‹CR›.

6.5. Repeat Steps 6.1 through 6.5 for each set of data.

7. Signing on to Machine N to Transfer Data to CFF

7.1. Type MSKERMIT ‹CR›.

7.2. Response: KERMIT-MS>; type CONNECT ‹CR›.

7.3. Response: CONNECTING TO HOST; type ‹CR›.

7.4. Type OPTION (N) ‹CR›.

7.5. Enter INC USER NUMBER XXXXXX (personal user number) ‹CR›.

7.6. Enter PASSWORD (SECRET NO.) (personal secret password) ‹CR›.

7.7. System will respond with prompt: GO.

7.8. Type FAMILY ‹CR›.

7.9. Type your user name, password, and application within the same line.

7.10. System prompts CHARGECODE; you respond with charge code no. (XXXXXXXX) ‹CR›.

7.11. Type KERMIT ‹CR›.

7.12. Response: KERMIT-170>; type SET PARITY NONE ‹CR›.

7.13. Response: KERMIT-170>; type (SERVER) ‹CR›.

7.14. (CTRL] C) ‹CR›.

7.15. Response: KERMIT-MS>; type SEND A or B, SA* or BK* or CA* or individual filename ‹CR›.

7.16 Response: KERMIT-MS>; type FINISH ‹CR›.

7.17. Response: KERMIT-MS>; type CONNECT ‹CR›.

7.18. Response: /(MASS); type ‹CR›.

7.19. Response: ? ; type DEFAULT DIR=BLUE ‹CR›.

7.20. Response: ? ; type SAVE FN FN, etc., ‹CR›.

7.21. Response: ? ; type END ‹CR›.

7.22. Response: / BYE; type ‹CR›.

7.23. Type CTRL] C ‹CR›.

7.24. Response: KERMIT> ; type QUIT ‹CR›.

7.25. Type VTERM CCF ‹CR›.

7.26. Select option (N) ‹CR›.

7.27. Sign on machine N in the usual way.

7.28. Type MASS ‹CR›.

7.29. Response: ? ; type GET BLUE/FN BLUE/FN, etc., ‹CR›.

7.30. Response: ? ; type END ‹CR›.

7.31. Response: / ; type USER.XXXXXX.XXXXXX ‹CR›.

7.32. Response: / ; type SAVE, FN, FN, etc., ‹CR›.

7.33. Response: / ; type BYE ‹CR›.

8. Creating a Urine Sample Identification File

8.1. Sign on machine N.

8.2. Use Account 082675, XXXXX.XXX (user number, password, and application) ‹CR›.

8.2.1. Create an ID file by using a line editor, such as X-Edit or FRED.

8.2.2. Example: NEW, GM0885 ‹CR›.

8.2.3. Use the line editors to modify the data in the file to reflect the true data set.

Example:

LN	Z NO.	VOL.	S.G.	TEMP
49692	83851	0700	27	03
48321	100202	0700	26	02
47502	72361	0700	25	03
43221	62005	0700	26	03
52321	100002	0700	27	03
49220	68802	0700	26	03
49121	72492	0700	26	03
48250	100051	0700	27	03
47600	99251	0700	27	03
48202	100220	0700	27	03
47203	72000	0700	26	03
47111	71001	0700	26	03
48001	100022	0700	26	03
48101	60021	0700	27	03
47922	68052	0700	26	03
00000	00000	0000	00	00

8.2.4. Type CTRL C ‹CR›.

8.2.5. Type REPLACE, GM0885 ‹CR›.

9. Creating an Environmental Sample Identification File

9.1. Sign on machine N.

9.2. Use account 082675,XXXXX,XXX (user number, password, and application) ‹CR›.

9.2.1. Create an ID file by using a line editor, such as X-Edit or FRED. Use either HI6 or HI8 files (dummy files created to standardize the format of the ID files), or the HIE or HIB files, for the environmental data sets.

9.2.2. Example: NEW, HI6, HI8, or HIE ‹CR›.

Example:

YR	LAB NO.	OWNER	ANALYST	TYPE	VOL/WT
00.	96049	5125	PG	L	.10*
85.	97050	5176	JW	G	10.0 **
86.	97023	5227	WP	S	.7087***
00.	00000	9999	XXX	X	1.000 ****
00.	00000	9999	XXX	X	1.000
00.	00000	9999	XXX	X	1.000
00.	00000	9999	XXX	X	1.000
00.	00000	9999	XXX	X	1.000
00.	00000	9999	XXX	X	1.000
00.	00000	9999	XXX	X	1.000
00.	00000	9999	XXX	X	1.000
00.	00000	9999	XXX	X	1.000
00.	00000	9999	XXX	X	1.000
00.	00000	9999	XXX	X	1.000
00.	00000	9999	XXX	X	1.000
00.	00000	9999	XXX	X	1.000

* L = liter
** G = gram
*** S = sample
**** no sample

9.2.3. Type CTRL C ‹CR›.

9.2.4. Type REPLACE, HI6, HI8, or HIE ‹CR›.

10. Creating a Tissue Sample Identification File

10.1. Sign on machine N.

10.2. Use account 082675,XXXXX,XXX (user number, password, and application) ‹CR›.

10.3. Type BEGIN, ALPHA1 ‹CR›.

Response: WELCOME TO ALPHA 1
1. RUN ALPHA1
2. RUN JIMX

SELECT BY NUMBER OR TYPE Q TO QUIT
?
Type 2.

Response: PARAMETERS FOR RUNJIM ARE NAME
ENTER NAME OF NEW JIMOUT FILE
?

Type JM86100 ‹CR›.

Response: WELCOME TO JIMX
ENTER THE NAME OF YOUR OUTPUT FILE
?

Type JM86100 ‹CR›.

Response: ENTER THE NUMBER OF ENTRIES YOU HAVE
?

Type 16 ‹CR›.

Response: ENTER THE SET NUMBER
?

Type 86100 ‹CR›.

Response: TYPE IN THE FOLLOWING, SEPARATED BY COMMAS--
TISSUE TYPE (3-DIGIT NUMBER)
WET WEIGHT
BOOK
PAGE
VOLUME ANALYZED
TOTAL VOLUME

```
?     640,1.00,43,16,100.00,100.00 ‹CR›
?     639,1.00,43,16,100.00,100.00 ‹CR›
?     84,46.30,38,120,100.00,200.00 ‹CR›
?     109,13.60,38,2,100.00,200.00 ‹CR›
?     453,3.57,38,120,125.00,250.00 ‹CR›
?     455,3.41,38,120,100.00,100.00 ‹CR›
?     12,41.60,38,120,200,400 ‹CR›
?     29,148.00,38,120,100,500 ‹CR›
?     30,142.90,38,132,250.00,500.00 ‹CR›
?     116,98.00,38,132,200.00,400.00 ‹CR›
?     47,134.20,38,122,125.00,250.00 ‹CR›
?     109,6.65,38,132,50.00,100.00 ‹CR›
?     84,21.50,38,132,125.00,250.00 ‹CR›
?     130,250.15,38,130,150.00,750.00 ‹CR›
?     131,49.90,38,128,175.00,725.00 ‹CR›
?     1,1025.25,38,130,500.00,1000.00 ‹CR›
?     STOP ‹CR›
```

Response: 000 86/07/10 13:18:57.260 SAVE JM86100:/HSE9LAB/JM86100 001 (206B WORDS)
000 86/07/10 13:19:00.712

Type REPLACE J1mDA1:/HSE9LAB/JIMDAT 001 (44B WORDS)$EXIT ‹CR›.

/OLD,JM86100
/LIST

86100	1	640	1.00	43-16	100.00	100.00
86100	2	639	1.00	43-16	100.00	100.00
86100	3	84	46.30	38-120	100.00	200.00
86100	4	109	13.60	38-2	100.00	200.00
86100	5	453	3.57	38-120	125.00	250.00
86100	6	455	3.41	38-120	100.00	100.00
86100	7	12	41.60	38-120	200.00	400.00
86100	8	29	148.00	38-120	100.00	500.00
86100	9	30	142.90	38-132	250.00	500.00
86100	10	116	98.00	38-132	200.00	400.00
86100	11	47	143.20	38-122	125.00	250.00
86100	12	109	6.65	38-132	50.00	100.00
86100	13	84	21.50	38-132	125.00	250.00
86100	14	130	250.15	38-130	150.00	750.00
86100	15	131	49.90	38-128	175.00	725.00
86100	16	11	1025.25	38-130	500.00	1000.00

/

11. Alpha Reduction Program for Urine Samples

11.1. Preliminary assessment of data using the miscellaneous program (ALPHA-MISC).

11.1.1. Sign on machine N.

11.1.2. Use account 082675,XXXXX.XXX (user number, password, and application) ‹CR›.

11.1.3. Type BEGIN,ALPHA ‹CR›.

Response: WELCOME TO ALPHA

1. AMERICIUM SAMPLE DATA
2. PLUTONIUM SAMPLE DATA
3. MISCELLANEOUS PLUTONIUM DATA
4. ENVIRONMENTAL ALPHA-SPEC DATA
5. CALIBRATION DATA

6. BACKGROUND DATA
7. UPDATE ISOTOPE LIBRARY
8. PLOT BACKGROUNDS
9. PLOT CALIBRATIONS
10. FIGURE 6% CALIBRATION MARGINS

SELECT BY NUMBER OR TYPE Q TO QUIT
?

Type 2 ‹CR›.

Response: PARAMETERS FOR SAM ARE INPUT1, INPUT2
ENTER INPUT 1 COUNTROOM FILENAME
?

Type SA3191 ‹CR›.

Response: ENTER INPUT2 ANALYST SAMPLE DATA FILENAME
?

Type HIB (use this file for Alpha Misc input only) ‹CR›.

Response: ENTER FUNCTION NUMBER

1 -- REDUCE AMERICIUM DATA
2 -- REDUCE PLUTONIUM DATA
3 -- REDUCE BACKGROUND OR CALIBRATION
4 -- UPDATE ISOTOPE LIBRARY
5 -- QUIT
?

Type 2 ‹CR›.

Response: ENTER TRACER LEVEL WITH DECIMAL POINT IN PCI
?

Type 2.10 ‹CR›.

Response: DATA TYPES: BIOASSAY = 1, ENVIRONMENTAL = 2, TISSUE = 3
ENTER DATA TYPE

?
Type 1 ‹CR›.

Response: ENTER COUNT TIME IN SECONDS--DEFAULT IS 70000
?

DETECTOR	RECOVERY
1	91.37
2	91.51
3	83.86
4	89.86
5	87.08
6	63.98
7	82.01
8	91.26

DETECTOR	RECOVERY
9	83.84
10	56.15
11	86.68
12	90.51
13	85.15
14	82.03
15	85.29
16	80.39

AVERAGE = 83.16 ± 9.45

11.2. Data-reduction output from the miscellaneous program.

11.2.1. After the above data has been examined and a printout requested for the count room records, a copy of the data will be transferred to the PC for printout and archiving. Press **F5** twice to allow naming the file.

11.2.2. Type A:FILENAME (example: SA1132M) ‹CR›.

Note: The M following the sample identification signifies that the output is from the miscellaneous output program that resides in ALPHA1.

11.2.3. Depress **F5** twice again (to switch back to CCF) ‹CR›.

11.2.4. Type REWIND,TAPE2 ‹CR›.

11.2.5. Type COPY,TAPE2 followed by ALT T ‹CR› to initiate data transfer.

11.2.6. After data transfer is complete, depress ALT K ‹CR› to terminate the transfer.

11.2.7. Depress both **SHIFT** keys simultaneously, then ‹CR›, to access the DOS level on the PC.

11.2.8. Type PRINT A:SA1132M ‹CR›. This will print the data output for the count room personnel to examine. This is the point where the decision is made as to the preliminary quality of the data. If the data set is judged acceptable, the final data-reduction program will be invoked.

11.3. Final assessment of the sample data set (ALPHA).

11.3.1. Depress both **SHIFT** keys simultaneously to access the CCF and machine N, where the data-reduction programs reside.

11.3.2. Type BEGIN,ALPHA ‹CR›.

Response: WELCOME TO ALPHA

1. AMERICIUM SAMPLE DATA
2. PLUTONIUM SAMPLE DATA
3. MISCELLANEOUS PLUTONIUM DATA
4. ENVIRONMENTAL ALPHA-SPEC DATA
5. CALIBRATION DATA
6. BACKGROUND DATA
7. UPDATE ISOTOPE LIBRARY
8. PLOT BACKGROUNDS
9. PLOT CALIBRATIONS
10. FIGURE 6% CALIBRATION MARGINS

SELECT BY NUMBER OR TYPE Q TO QUIT
?

Type 2 ‹CR›.

Response: PARAMETERS FOR SAM ARE INPUT1, INPUT2
ENTER INPUT1 COUNT ROOM FILENAME
?

Type SA3191 ‹CR›.

Response: ENTER INPUT2 ANALYST SAMPLE DATA FILENAME
?

Type HIB (use this filename for alpha misc input only) ‹CR›.

Response: ENTER FUNCTION NUMBER
1 -- REDUCE AMERICIUM DATA
2 -- REDUCE PLUTONIUM DATA
3 -- REDUCE BACKGROUND OR CALIBRATION DATA
4 -- UPDATE ISOTOPE LIBRARY
5 -- QUIT

?
Type 2 ‹CR›.

Response: ENTER TRACER LEVEL WITH DECIMAL POINT IN PCI
?

Type 2.10 ‹CR›.

Response: DATA TYPES: BIOASSAY = 1, ENVIRONMENTAL = 2, TISSUE = 3
ENTER DATA TYPE
?

Type 1 ‹CR›.

Response: ENTER COUNT TIME IN SECONDS --DEFAULT IS 70000
?

DETECTOR	RECOVERY
1	91.37
2	91.51
3	83.86
4	89.86
5	87.08
6	63.98
7	82.01
8	91.26

DETECTOR	RECOVERY
9	83.84
10	56.15
11	86.68
12	90.51
13	85.15
14	82.03
15	85.29
16	80.39

AVERAGE = 83.16 ± 9.45

11.4. Data-reduction output for final data set.

11.4.1. After the above data has been reviewed and a final copy is needed from the count room, return to the CCF from the DOS level by depressing both **SHIFT** keys simultaneously.

11.4.2. Depress **F5** twice to allow naming of the data file that is to be transferred. Type A:FILENAME (example: SA1132A) ‹CR›.

Note: The A following the sample identification denotes that the file is the final copy of the data-reduction set.

11.4.3. Depress **F5** twice again, then ‹CR›, to switch back to CCF.

11.4.4. Type REWIND,TAPE2 ‹CR›.

11.4.5. Type COPY,TAPE2 followed by ALT T ‹CR› to initiate data transfer.

11.4.6. After data transfer is complete, depress ALT K, then ‹CR›, to terminate transfer.

11.4.7. Depress both **SHIFT** keys simultaneously, then ‹CR›, to access the DOS level on the PC.

11.4.8. Type PRINT A:SA1132A ‹CR›. This will print the final copy of the data report that will be given to the customer.

11.4.9. Depress both **SHIFT** keys simultaneously to return to the CCF prompt.

11.4.10. Type BYE ‹CR› to log off the CCF.

11.4.11. Retrieve the output from the LaserJet printer. The output should be signed by both the count room technician and the count room supervisor before it is sent to the customer.

ALPHA PROGRAM — BACKGROUND AND CALIBRATION DATA

Procedure: Entering Background and Calibration Data from the Alpha Program	**Method No.:** CR110
Effective Date: 06/19/91	**Authors:** George Brooks Anthony Sanchez

1. Introduction

In order to obtain accurate and precise sample-counting results, adequate background and calibration data for the counters must be accumulated. Since background and calibration data are taken weekly, as described in Method No. CR100, data storage and tracking are necessary. This procedure describes the steps necessary to accomplish this task.

2. Data Entry Procedure

2.1. Sign on to machine N of the Central Computing Facility (CCF).

2.2. Use account no. 079831, H9LAB.

2.3. Answer with the user's account number, Z-number, classification, and password.

2.4. Once in the account, initiate the Alpha program by typing BEGIN,ALPHA. This will produce the following response:

Welcome to Alpha

1. Americium Sample Data
2. Plutonium Sample Data
3. Miscellaneous Plutonium Data
4. Environmental Alpha_Spec Data
5. Calibration Data
6. Background Data
7. Update Isotope Library
8. Plot Backgrounds
9. Plot Calibrations
10. Figure 6% Calibration Margins

Select by Number or Type Q to Quit.
?_____

For background data entry, the user chooses option 6; for calibration data the option is 5.

2.5. After the user has selected the appropriate option, the program will query the user as follows:

Parameters for Cal are Infile
Enter Infile Count Room Filename
?_____
Enter Function Number
1. --Reduce Americium Data
2. --Reduce Plutonium Data
3. --Reduce Background or Calibration Data
4. --Update Isotope Library
5. --Quit
?_____

The user will select the appropriate option.

2.6. The program will then ask:

Do you want output at the terminal too? Y/N ?

If the user responds with "Y," the program gives the user a cursory view of the data, whether calibration or background.

2.7. After the program has finished, the user types EXIT to exit from the Alpha program.

2.8. The user can obtain a hard copy of the background or calibration data by the following steps:

2.8.1. Type REWIND,*

2.8.2. Press **F5** twice to name the file to be transferred from CCF to the PC.

2.8.3. Type COPY,TAPE2 (Alt-T) ‹CR›.

This command copies the noted file into a file on the PC.

2.8.4. Depress both **SHIFT** keys simultaneously to get to the PC.

2.8.5. Print the PC file to the printer associated with the PC.

2.8.6. Depress both **SHIFT** keys to return to the CCF.

2.8.7. Log off the CCF.

The data has now been successfully entered and the user is provided with a hard copy of the data set.

ASSIGNED CHANNELS FOR PLUTONIUM ISOTOPES — ALPHA SPECTROMETRY

Procedure: Assigned Pu Channels for Alpha Spectrometry Systems: 16, 32, 48, 64, 80, and 96	**Method No.:** CR130
Effective Date: 06/19/91	**Authors:** George Brooks Anthony Sanchez

1. Introduction

1.1. In order to accurately calibrate the alpha spectrometers between systems, the detectors must be calibrated against a common standard. For the alpha-counting facility, a series of standard plates with equal amounts of Pu-238, Pu-239, and Pu-242 is counted in each bank of 16 detectors. To calibrate the detectors, the response from each bank (as routed through analog-to-digital converters and mixer/routers to the multichannel analyzers) should be consistent. The following sections represent the channels in which each detector should provide information; a spectral peak should appear.

1.2. The following channels represent the positions for plutonium isotopes in the 16, 32, and 64 alpha systems:

Detector No.	Channels	Pu-242	Pu-239	Pu-238
1	0-128	46	70	106
2	129-256	174	198	234
3	257-384	302	326	362
4	385-512	430	454	490
5	513-640	558	582	618
6	641-768	686	710	746
7	769-896	814	838	874
8	897-1024	942	966	1002
9	1025-1152	1070	1094	1130
10	1153-1280	1198	1222	1258
11	1281-1408	1326	1350	1386
12	1409-1536	1454	1478	1514
13	1537-1664	1582	1606	1642
14	1665-1792	1710	1734	1770
15	1793-1920	1838	1862	1898
16	1921-2048	1966	1990	2026

1.3. The following channels represent the positions for plutonium isotopes in the 48 and 80 alpha systems:

Detector No.	Channels	Pu-242	Pu-239	Pu-238
1	2049-2176	2094	2118	2154
2	2177-2304	2222	2246	2282
3	2305-2432	2350	2374	2410
4	2433-2560	2478	2502	2538
5	2561-2688	2606	2630	2666
6	2689-2816	2734	2758	2794
7	2817-2944	2862	2886	2922
8	2945-3072	2990	3014	3050

Detector No.	Channels	Pu-242	Pu-239	Pu-238
9	3073-3200	3118	3142	3178
10	3201-3328	3246	3270	3306
11	3329-3456	3374	3398	3434
12	3457-3584	3502	3526	3562
13	3585-3712	3630	3654	3690
14	3713-3840	3758	3782	3818
15	3841-3986	3886	3910	3946
16	3969-4096	4014	4038	4074

1.4. The following channels represent the positions for plutonium isotopes in the 96 alpha system:

Detector No.	Channels	Pu-242	Pu-239	Pu-238
1	0-128	73	85	103
2	129-256	201	213	231
3	257-384	329	341	359
4	385-512	457	469	487
5	513-640	585	597	615
6	641-768	713	725	743
7	769-896	841	853	871
8	897-1024	969	981	999
9	1025-1152	1097	1109	1127
10	1153-1280	1255	1237	1255
11	1281-1408	1353	1365	1383
12	1409-1536	1481	1493	1511
13	1537-1644	1609	1621	1639
14	1665-1792	1737	1749	1767
15	1793-1920	1865	1877	1895
16	1921-2048	1993	2005	2023

ASSIGNED CHANNELS FOR URANIUM AND THORIUM ISOTOPES — ALPHA SPECTROMETRY

Procedure: Assigned U and Th Channels for the 96 Alpha Spectroscopy Systems	**Method No.:** CR140
Effective Date: 06/19/91	**Authors:** George Brooks Anthony Sanchez

1. Introduction

1.1. As specified in Method No. CR130, properly assigned channels are required for adequate data reduction. The following lists outline the channel assignments for the 96 alpha system, which has been dedicated to the analysis of U and Th. These elements can potentially cause contamination problems.

1.2. Uranium Isotopes.

Detector No.	Channels	U-238	U-235	U-234	U-232
1	0-128	37	48	66	94
2	129-256	165	176	194	222
3	257-384	293	304	322	350
4	385-512	421	432	450	478
5	513-640	549	560	578	606
6	641-768	677	688	706	734
7	769-896	805	816	834	862
8	897-1024	933	944	962	990
9	1025-1152	1061	1072	1090	1118
10	1153-1280	1189	1200	1218	1246
11	1281-1408	1317	1328	1474	1502
12	1409-1536	1445	1456	1474	1502
13	1537-1664	1573	1584	1602	1630
14	1665-1792	1701	1712	1730	1758
15	1793-1920	1829	1840	1858	1886
16	1921-2048	1957	1968	1986	2014

1.3. Thorium isotopes.

Detector No.	Channels	Th-232	Th-230	Th-229	Th-228
9	1025-1152	1052	1086	1094	1123
10	1153-1280	1180	1214	1222	1251
11	1281-1408	1308	1342	1350	1379
12	1409-1536	1436	1470	1478	1507
13	1537-1664	1564	1598	1606	1635
14	1665-1792	1692	1726	1734	1763
15	1793-1920	1820	1854	1862	1891
16	1921-2048	1948	1982	1990	2019

SINGLE ALPHA SPECTROSCOPY

Procedure: Single Alpha Spectroscopy	**Method No.:** CR160
Effective Date: 06/19/91	**Author:** George Brooks

1. Introduction

The single alpha spectrometer is mainly used for testing purposes, which include both spot and electroplated samples. Other samples include a variety of matrices from different programs. The main purpose of this analyzer is to support experimental programs and test suspect equipment in our routine counting systems.

2. System Setup

2.1. Analyzer

2.1.1. Connect the cable from the output of the model 8022 biased amplifier to the **ADC IN** connection of the external ADC.

2.1.2. Set the **OFFSET** switches in the **down** position.

2.1.3. Set the **PEAK DETECT AUTO** switch in the **up** position.

2.1.4. The **PHA** switch must be **up**.

2.1.5. The **COINCIDENCE** switch must be **up**.

2.1.6. Set the **FINE GAIN** to **032**.

2.1.7. Set the **GAIN** switch 256 in the **up** position.

2.1.8. Turn the **GAIN** knob (small knob) to **256**.

2.1.9. Turn the **RANGE** knob (large knob) to **256**.

2.2. Biased amplifier

2.2.1. Set the **BIAS** level at **617**.

2.2.2. Set the **GAIN** at **X5**.

2.3. Tennelec amplifier

2.3.1. Set the **COARSE GAIN** at **5**.

2.3.2. Set the **FINE GAIN** at **500**.

2.3.3. Set the **RESTORER** switch **up** (in).

2.3.4. Set the **SHAPING** switch **down** (bipolar).

2.3.5. Set the **RATE** switch **down** (medium).

2.3.6. Set the **POLARITY** switch **down** (inverted).

2.4. Calibration

2.4.1. Place one of the three isotope standards in the chamber.

2.4.2. Turn the switch to the left to apply a vacuum to the chamber.

2.4.3. Turn the switch on the 50-volt power supply to **on**.

2.4.4. Set the **MEMORY** switch on the MCA to **1/4**.

2.4.5. Press the **AREA INTEG** and **AREA ROI** to clear (no lights).

2.4.6. Press the **CLEAR ALL** key.

2.4.7. Press the **CLEAR DATA** and **CLEAR TIME** keys.

2.4.8. Press the **COLLECT** key.

2.4.9. The 4.9-MeV peak of Pu-242 should be in channel 92.

2.4.10. The 5.15-MeV peal of Pu-239 should be in channel 140.

2.4.11. The 5.50-MeV peak of Pu-238 should be in channel 204.

2.4.12. This should give a calibration of approximately 5 keV per channel for 256 channels. This calibration resolution is not fixed, and can be predetermined for any situation that might be required for this particular system.

3. Background and Sample Data Acquisition

Background and sample data acquisition should be processed as described in Method No. CR150, Step 4, Background and Sample Analysis. Since both systems use the same ADC, M/R, analyzer, and computer hookup, the procedures to collect sample information on this system are exactly the same.

4. Background and Sample Analysis

4.1. Since the data derived from this system is, for the most part, used for experimental purposes, the data produced should (and will) not be reduced to a final format. The data can be printed as a listing file of the raw spectra, from which appropriate information can be deduced.

4.2. If a printout of the data file is needed, the data must be transferred from the MCA to the PC. This process is described in Method No. CR150, Step 6. The file then can be printed and sent to the customer.

LIQUID SCINTILLATION COUNTING SYSTEM

Procedure: Liquid Scintillation Counting (2200CA and 2500TR Systems)	**Method No.:** CR180
Effective Date: 06/19/91	**Author:** George Brooks

1. Introduction

To support both the Bioassay and Environmental programs, the alpha-counting facility maintains two Packard liquid scintillation counting systems, a 2200CA and a 2500TR. These systems are currently configured only for tritium analysis. The matrices vary with the program supplying the samples. The Bioassay samples are urine only, while the Environmental samples may consist of waste waters, sludges, silicates, vegetation, bees, honey, or any other samples for which it is necessary to determine the tritium content. These systems also support the Emergency Operational Health Physics program in the event of an accidental ingestion of tritium.

2. System Calibration

2.1. Before calibration can begin, the user must set up and define the counting protocols that are needed for each program. The following is a summary of the steps necessary to develop adequate counting protocols.

2.1.1. Enter the main format when using either system.

2.1.2. Depress the **F1** key on the 2200CA and the **F2** key on the 2500TR system. Activating this utility allows the user to define each protocol to match specific counting needs.

2.1.3. For the 2200CA system, the protocol is brought up in pages and the user can move up and down each page to change the parameters as needed. There are several pages within each protocol (four in the 2200CA system), and all necessary variables need to be addressed.

2.1.3.1. The variables to be addressed in the first page are the protocol name, count time, isotope of interest (automatically defined within the program for H-3), dpm mode, and the method for dpm calculation.

2.1.3.2. In page two, information on the quench curve is stored to provide for later dpm analysis. These values can either be copied from the quench curve protocol (no. 1), or entered by

hand from the list generated when the quench curve is run; the latter is the preferred method.

2.1.3.3. Page three needs no changes.

2.1.3.4. Page four maintains the printer output. In the Bioassay and Environmental programs, the hard copy has been defined to provide the user with final calculated data based on the sample volume and amount of cocktail used. Each program has its own particular algorithm that defines its output. The algorithms are defined in the instrument performance assessment (IPA) notebook for the 2200CA system.

2.1.4. For the 2500TR system, the process for editing the protocols is different. Within the 2500TR software, each variable in the protocol is a separate function. After the **F1** key has been depressed, the program generates a list of variables that the user can modify. The functions described in Step 2.1.3 should be used, modified as necessary. The only difference is the quench curves. In the 2200CA system, these curves are run under one protocol, whereas in the 2500TR system they are run under two separate protocols and then into memory-management software that stores the quench curves with specific names for use with other protocols. The user should pick either the ENV or BIO quench curves. The same procedure should be followed to create the algorithms for each particular counting situation. Again, each of these is described in more detail in the 2500TR IPA notebook.

2.2. In order to provide quality data, the instruments must be calibrated routinely before the samples submitted to the count room are quantitatively analyzed. Calibrations are conducted weekly and monthly. The following procedures outline the weekly functions for both liquid scintillation counting systems.

2.2.1. At the beginning of each week the systems must be normalized and calibrated. This requires that a series of three samples be run: a C-14, an H-3, and a blank. These samples are always kept in the holding bay in the front of the instrument. In both instruments a sample tray must be obtained (no specific tray is needed for the 2200CA system, but the tray for the 2500TR has SNC printed on the side), the samples must be introduced in the order specified earlier, and the SNC protocol key must be placed on the sample tray. In the 2200CA system the user depresses the **F2** key to start the counting sequence. In the 2500TR system, the user depresses the green key in the upper right-hand corner of the computer keyboard.

2.2.2. The instrument now counts the samples (standards and blank) for approximately 1.5 h. The data is then transferred to the appropriate files within each instrument as the IPA parameters. For the 2200CA, the data

must be compiled at the end of each year and appended to the 2200CA IPA notebook. For the 2500TR, the software supports automatic graphic analysis of the data, saving the analyst the time and effort of assembling the data. The data can be printed automatically and appended to the 2500TR IPA notebook. The IPA parameter limits are factory set (H-3 efficiency, H-3 background, chi-square, and figure of merit), and internal software on both instruments will alert the user at the end of the calibration set if any parameters were found to be out of control. If this is the case, the user should contact the count room manager or the instrument manufacturer to determine a solution to the problem.

2.3. Monthly performance analysis pertains to the analysis of a quench curve set. Commercial quench sets are available but usually do not adequately represent the true nature of the counting process in each counting facility. In order to best represent the real samples (samples vary in the amount of sample used and the amount of cocktail that the sample is immersed in), quench sets that represent the real samples are generated.

In the EM-9 counting facility we encounter two types of samples: Environmental samples, which have 5 mL of sample in 15 mL of Ultima Gold cocktail, and Bioassay samples, which have 200 μL of sample in 10 mL of Ultima Gold cocktail. The quench sets were designed to duplicate the samples as closely as possible. Two sets of quench standards were made, normalizing the amount of H-3 in the sample set while varying the amount of quench agent in each. In these quench sets, a sodium iodide solution in varying amounts was added to each scintillation vial. The specifics of the quench-set generation can be found in the 2200CA IPA notebook. The quench curves provide the actual efficiency as a function of the amount of quench in the sample. The sets try to provide a wide enough range to mimic real samples. These quench sets will be run monthly to calculate the new quench curves.

NOTE: A tSIE varies between matrices, but is between 300 and 600. A completely unquenched sample has a tSIE of 1000; most quenched samples have tSIE values of 1.

2.3.1. For the 2200CA system, each quench curve (Bioassay and Environmental) must be run separately. With this instrument all quench curves are run under protocol no. 1. Remove the samples from the refrigerator. (Bioassay samples are marked BIO on the lid and there are 10 of them; Environmental samples are marked ENV and there are 8 of them.) Load the samples as described in Step 2.2.1. Load the samples in the sample tray and place the protocol no. 1 key in the tray. Start the counting sequence by depressing the **F2** key. The results will be written to that protocol and a chart will be printed. The chart should be attached to the quench curve section in the 2200CA IPA notebook.

2.3.2. For the 2500TR system, the new software allows the quench curves to be run simultaneously. Obtain the quench curve samples as outlined in Step 2.3.1. In the 2500TR system, the Bioassay quench curve will be run under protocol no. 17, while the Environmental curve will be run under protocol no. 18. Depress the green key in the upper right-hand corner of the computer keyboard to start the counting sequence. When counting is complete, the new quench curves will be printed. These should be appended to the quench curve section in the 2500TR IPA notebook.

2.3.3. After a series of quench curves is compiled, the user can examine the data and determine if any trends, positive or negative, are becoming apparent (i.e., the look and shape of the curve and the ranges of the tSIE values). If a trend is beginning to show, the user should call the count room manager or the instrument manufacturer to determine corrective action for the problem.

3. Sample Analysis

3.1. Sample analysis is the simplest part of these procedures. Once the user has determined the appropriate protocol to use (Environmental, Bioassay, 1-Minute Emergency Bioassay, or HSE-11 Tritium in Oils program) based on the samples submitted, sample analysis can begin. The final results for the samples will be printed within the appropriate unit conversions: μCi/L for the Bioassay and 1-Minute Emergency Bioassay programs, and pCi/L for the Environmental and HSE-11 Tritium in Oils programs.

3.2. After the samples are received from either Environmental or Bioassay, they should be loaded in the counting system and allowed to cool for approximately one-half hour. This minimizes false signal responses that could result from temperature changes within the samples.

3.3. After the samples have stabilized and are ready to be analyzed, make sure that the printer is turned on (if it is off, no results will be printed, voiding the analysis). With the 2200CA system, depress the **F2** key; with the 2500TR system, depress the **green key** in the upper right-hand corner of the computer keyboard.

3.4. After counting is complete, remove the printed results from the printer and have the sample set signed by the cognizant manager (either the count room manager or the section leader). After the signature has been obtained, make copies to put in the count room logbook and give the final result to the analyst who then enters the data directly into the computer using the LIMS Enter program on the VAX.

ERROR DIAGNOSTICS FOR THE ALPHA-COUNTING FACILITY

Procedure: Error Diagnostics for the Alpha-Counting Facility	**Method No.:** CR240
Effective Date: 08/13/90	**Author:** George Brooks

1. Introduction

1.1. To adequately support the alpha-counting facility, procedures must be in place that allow the count room personnel to determine the extent of any problem that arises. This type of error diagnostics includes both software and hardware corrections. The count room personnel should be able to determine (at a simplified level) the type of problem that exists, what components, signal cables, or specific parts need to be replaced or repaired, or whether the technical service repairmen should be contacted.

1.2. This procedure provides the information necessary for the count room personnel to perform these duties.

2. Software Diagnostics

2.1. Preliminary assessment of system operation is conducted during the acquisition of background and calibration data sets. After data collection is complete, the data set is processed and final data figures are expressed in the output of the computer program. Initial data that displays any background count greater than 9 counts per counting period per integrated region ($^{242,239,238}Pu$), along with generated efficiencies that are calculated to be greater than 26%, will require some form of corrective action, as described in Section 3.

2.2. Secondary assessment of spectral data files is completed after the initial program is run on each of the "real" sample data files. This is the raw spectral data as it is received from the multichannel analyzers (MCAs). Look for any sign of problems, such as peak shift as a result of vacuum loss, gain shift, or signal degradation as a function of plate preparation.

2.3. After the data is transferred from the PC in the alpha-counting facility, the ALPHA-MISC program reduces the sample data set. Within the program, software diagnostics routines alert you to problems such as low tracer recovery (<40%). If such problems exist, diagnostic procedures are invoked. The specific procedures are documented in Section 3.

3. Hardware Diagnostics

3.1. Initial problems can be discovered while data is being acquired. Examining the quality of the spectrum (specifically, the peak shape, peak distribution, and energy position of each peak) while it resides in the MCA will allow you to determine if problems exist with any hardware components.

3.2. If problems are encountered in any alpha spectroscopy units, as displayed by the data output, some of the following hardware diagnostics techniques should be used to eliminate or minimize the problem.

3.3. The first step is to use an electronics cleaning solution ("Kleen-It") on all the connectors between components. This cleaning is especially critical for the signal or SHV (super high voltage) cables.

3.4. The next step entails cleaning the inside of the vacuum chambers, inner microdot connectors, and sample holders with isopropyl alcohol. Count the sample again and determine if the problem still exists.

Note: Never clean the ion-implanted surfaces of the silicon surface barrier detectors with alcohol or with cleaning tissue.

3.5. If the problem still exists, the next step should be to analyze the quality of the signal as it is generated from each component in the system. This step requires the use of an oscilloscope, following the procedure described below.

3.5.1. Obtain a BNC signal cable, which will be placed between the components and the oscilloscope.

3.5.2. Plug the output from the amplifier into the input jack of the oscilloscope (**INPUT A**). Adjust the time constant and frequency (in MHz) so that the signal can be interpreted on the cathode-ray tube.

3.5.3. Begin by analyzing the signal from the amplifier to determine if any part of the signal is being processed. You should see a generally Gaussian-shaped peak on the output display of the oscilloscope. If no signal is being processed at this point, it is safe to assume that the problem is in either the bias supply, the signal BNC cable, the bias supply SHV cable, the surface barrier detector (SBD), the preamplifier, or the amplifier. In this case, procure alternate bias supplies, SBDs, preamplifiers, amplifiers, or the appropriate signal or high-voltage (HV) cables.

3.5.4. To determine if the cause is from a particular component, exchange each component individually, beginning with the signal and HV cables. Examine the signal. If there is no change, exchange the bias supply. Examine the signal again, and if there is still no change, exchange the

SBD. Continue this process until all components have been exchanged and tested for signal output.

3.5.5. If the steps outlined above have produced a response but no signal is being received at the MCA, the problem resides in another component above this level. The next step is to continue up the component level within the system.

3.5.6. Connect the BNC signal cable from the oscilloscope to the output of the analog-to-digital converter (ADC). Adjust the time constants and frequency of the signal for proper response. Examine the signal. Follow the basic procedures described in Step 3.5.4. In this case, exchange the ADC with an alternate.

3.6. If the problem is corrected, run calibrations and backgrounds to assure that the system is operating within appropriate system counting parameters.

3.7. If the problem still exists, it is most likely at the component (IC) level within one of the major components of the system. This will require a more extensive repair, and count room personnel should call either the manufacturer or the Laboratory electronics repair shop and make an appointment to have the unit serviced.

3.8. In some instances, the repair work will cost more than replacing the component. Determine the most cost-effective means of repair or replacement while minimizing the downtime of the alpha-counting facility.

3.9. If it is cheaper to procure a new part rather than repair the old one, execute a purchase order to obtain the replacement part as soon as possible.

4. Diagnostics Documentation

4.1. Any hardware diagnostics procedure performed on any system component must be documented, either in the specific system operational notebook or in the system sample logbook. In this fashion, changes to any one of the systems can be properly documented to comply with the overall group Quality Assurance Plan.

FILLING THE HPGe DETECTOR SYSTEMS WITH LIQUID NITROGEN

Procedure: Filling the HPGe Detector Systems with Liquid Nitrogen	**Method No.:** CR370
Effective Date: 08/20/90	**Author:** George Brooks

1. Introduction

1.1. Part of the normal duties of the gamma-counting facility personnel is to maintain the level of liquid nitrogen in Dewars that support the HPGe detector heads. This operation is required weekly to maintain the integrity of the counting system.

1.2. The following procedure outlines the specific steps required to perform this operation. If any other questions arise, contact the count room manager.

2. Procedure

2.1. Every Monday, plan to take at least half the day to fill and calibrate the detectors in room B8D.

2.2. Begin by getting the liquid nitrogen (LN) transfer cart from the Tissue section cage in the east end of the basement. The combination to the cage is 7682. Be sure to lock the cage when you have taken the cart out.

2.3. Go out the double doors at the east end of the basement. There should be a 160-L supply Dewar just at the end of the left walk-in freezer. Load the Dewar on to the cart and transport it to room B8D.

2.4. Before attempting to fill any of the detectors, remove the filling pipe (the long pipe covered with red foam and tape) from the supply Dewar and attach the fill adapter with the surgical hose. This allows connecting the supply Dewar to the individual detector Dewars.

2.5. Note the various safety precautions outlined in SOP 10 regarding cryogenic transfers and carefully observe them while filling the detectors with liquid nitrogen. Two of the more important precautions follow.

2.5.1. Be sure that the door to room B8D is left open during filling. Liquid nitrogen displaces air as it evaporates, and if this should occur within a closed room, you could be overcome from lack of oxygen.

2.5.2. Always wear the proper safety gear when filling detectors. To protect yourself from spattering LN, wear a lab jacket, leather gloves, and a face shield. Liquid nitrogen is cryogenic and burns the skin.

2.6. Wheel the 160-L supply Dewar parallel to the detector rack and attach the fill hose of the easternmost detector (detector no. 11) to the supply hose interface on the supply Dewar. Open the valve all the way. As the LN travels through the hoses it freezes them, making them hard and stiff. Fill the detector until LN escapes from the vent line on the back side of the detector. This will require from 5 to 15 min. When LN escapes from the detector Dewar, shut off the valve on the supply Dewar. Remove the fill hose from the supply hose interface using the following technique.

2.6.1. Obtain two wrenches that fit the two fittings on the supply line and the flare interface. Carefully unscrew the fittings until they come apart. Be careful not to stress these fittings; they become very brittle at cryogenic temperatures and can easily be broken.

2.7. Log in the fill date, initial the column, and note on the LN filling log which detector was filled. The log is above the desk in the facility.

2.8. Fill the rest of the detectors (nos. 7, 6, 5, 2, and 10) as described above, logging their status on the LN log sheet.

2.9. Two more detectors are to be filled after completing the above procedure. They are the two detectors next to the green Tennelec gas-flow proportional counting system. These detectors are equipped with the appropriate cryogenic tubing to interface with the supply Dewar. Fill them according to the above instructions. Log these fillings on the LN log sheet.

2.10. In most cases, the supply Dewar should provide enough LN to supply all eight detectors. If it does not, one of two options can be exercised.

2.10.1. Acquire additional LN from either Dave Waechter of EM-8 or the EM-9 Organic Analysis section. They should be able to provide enough LN to complete the filling procedure.

2.10.2. Call the Gas Plant at 667-4406 and request an emergency fill. This can usually be done within a day.

2.11. Remove the supply hose interface from the supply Dewar and reinstall the filling pipe. This adapter allows the LN supply truck operator to fill these Dewars from his or her supply hose.

2.12. If you begin the filling sequence and then discover that the supply Dewar has not been filled since the previous week, call the Gas Plant at 667-4406 and arrange for an emergency fill. On most occasions, the Gas Plant fills our supply

Dewars on Wednesdays. If a holiday falls on the normal filling day, either someone from the plant will contact us or we need to contact the plant. Regardless, we must have LN to fill the detectors. If a holiday falls on Monday, filling can wait until Tuesday in most cases. If a weeklong holiday is scheduled, as during the Christmas break, it will be necessary for someone to come in and fill the detector systems. Theoretically, the detector Dewars should hold enough LN to last for two weeks, but we fill once a week to avoid problems.

2.13. Return the supply Dewar to the east end of the building and the transfer cart to the Tissue section cage.

2.14. If there are any questions concerning any part of this procedure, contact the count room manager for verification or further details.

PERFORMANCE VERIFICATION FOR THE HPGe DETECTOR SYSTEMS

Procedure: Performance Verification for the HPGe Detector Systems	**Method No.:** CR390
Effective Date: 08/20/90	**Author:** George Brooks

1. Introduction

1.1. Good laboratory practice for the qualification of the HPGe detector system requires a variety of parameters to be analyzed with some regularity to determine the performance of the systems over time. This analysis can be conducted in a variety of ways. The following procedure documents what EM-9 believes to be an adequate set of parameters to use in evaluating the condition of the HPGe counting systems.

1.2. The following procedure outlines the specific steps required to perform this operation. If any other questions arise, contact the count room manager.

2. Weekly Procedures

2.1. The first procedure conducted weekly is energy calibration, as described in Method No. CR380. This procedure is completed after routine filling of the detectors with liquid nitrogen. The data is then dumped into a database on the VAX for data reduction. The annual and semiannual energy calibration data sets are then plotted to provide graphical representations of the data for the section and annual QA reports. An example of the data-transfer process (GELI CALIB logbook to the VAX) can be seen in Fig. 1 in Method No. CR380.

2.2. Other weekly procedures provide for the characterization of matrix standards for an accurate determination of background contributions to sample activity. This process requires you to run a series of blanks for each matrix analyzed. This usually includes the following matrices.

2.2.1. A 500-mL water blank.

2.2.2. A 100-g soil blank.

2.2.3. A 100-g vegetation blank.

2.2.4. Filter blanks, Microsorban and Whatman.

2.2.5. A charcoal cartridge blank.

2.2.6. A 1- or 4-L Miranelli water blank.

2.3. Run blank matrices for 10,000 s on each detector. The samples should be counted weekly, but at times the facility is extremely busy with samples and blanks cannot be counted as frequently. The count room personnel try to adhere to this weekly counting schedule. When rush samples upset these schedules, run the blanks at the earliest convenient time. After the data is processed, dump it to the data disk on the VAX.

3 Monthly Procedures

3.1. The monthly procedure is the analysis and reduction of data from NIST 4218-E (no. 22 and no. 23) point sources. These analyses provide the data to support the relative efficiency curves that document the performance of the HPGe detectors currently in use in the gamma-counting facility. There is no set time when the NBS samples are to be run, but they are to be analyzed during each month's counting sessions. The following steps outline the necessary procedures.

3.1.1. Obtain both the NBS point sources (no. 22 and no. 23) from the storage cave in the rear of the room.

3.1.2. Place the no. 22 source on detector no. 1, with the red stripe facing the front of the cave. Place the no. 23 point source on detector no. 2 and configure it to face the same direction as no. 22. (Orienting the point sources in the same direction eliminates or minimizes the directional variable and increases the accuracy of the data set.)

3.1.3. Never put the two point sources on the same MCAs, such as detectors no. 10 and 5 or 2 and 6. Because of the high activity level of these sources, the dead time will be beyond the acceptable levels (we require that the dead time be kept below 10%).

3.1.4. Close the detector doors (push the red button on the upper left-hand corner of the door) and activate the counting sequence on the MCAs. Set the count time (live time) for 10,000 s. Start data acquisition.

3.1.5. After the 10,000-s count is complete, dump the data to the VAX data disk for further analysis. Transfer the point sources to detectors no. 5 and 6 and begin the counting sequence for those detectors. Again, follow the directions for dumping data explained earlier. These point sources are usually counted overnight, which minimizes the effect on sample throughput during the day.

3.1.6. After all the detectors have counted the point sources and the data files have been stored on the VAX data disk, it is time for the data-reduction routines. Method No. CR400 provides a complete explanation of the process.

4. Annual Procedures

4.1. The general policy for the gamma-counting facility is to generate new efficiency curves each year for each detector for each matrix. This can be done either by providing new single-nuclide sources or solutions from EPA in Las Vegas, the Isotope Products Laboratory, or the NIST, or by using a broad-based NBS Eu-152,154, Sb-125 solution for specific matrices. The gamma-counting facility currently uses the wide-band energy source $^{152,154}Eu/^{125}Sb$ standards because they yield more information than single-isotope sources. The counting facility usually orders the standards from the EPA regional office, which provides enough of the standard solution to produce several standards in a variety of matrices. Method No. CR400 describes the process by which these new efficiencies are generated. This information then provides the data from which the efficiency curves for each detector for each matrix are generated.

4.2. Some manufacturers suggest that the life and the maximum performance of the detectors can be extended by thermally cycling them annually. We suggest that at the end of each yearly cycle the voltage be dropped and all the HPGes be brought to room temperature. After two days the detectors are brought back to cryogenic temperatures and integrated back into the normal counting cycle. If any questions arise, consult the count room manager.

STANDARD ANALYSIS FOR THE HPGe DETECTOR SYSTEMS

Procedure: Standard Analysis for the HPGe Detector Systems	**Method No.:** CR400
Effective Date: 08/21/93	**Author:** George Brooks

1. Introduction

1.1. After data collection is complete, the information must be analyzed so that it may be passed on to the customer. A variety of procedures can be undertaken to complete this process, depending upon what is required from the program. The following procedure outlines the specific steps for processing gamma spectroscopy data.

2. Data Reduction

2.1. Obtain a valid account on the EM-9 VAX and sign on under that account. This will allow you access to the programs necessary for gamma spectroscopy data analysis.

2.2. Two programs exist within the LIMS menu for data reduction, GAMS and NGAM. GAMS allows you to reduce the data without downloading the information into Datatrieve. NGAM allows you to reduce the data while providing direct downloading capability into the database, so that you can store the information and generate a report. These programs can be used for three specific purposes as described in Section 3.

3. Procedure

3.1. Normal data reduction.

3.1.1. Type NGAM within the LIMS menu to initiate the program that allows Ge(Li) and HPGe data reduction.

3.1.2. The program will first ask how many channels are to be used for the background. The standard reply is 10 channels.

3.1.3. The program then queries you for the MCA.DAT;* file being used: WHAT ACCOUNT WILL YOU BE USING?: The program was designed to be used by three specific users and it displays a list of these users. You then choose the analyst whose account is to be used.

3.1.4. The program then asks, WHAT IS THE MCA.DAT FILE TO BE USED?: The reply is 2316 (this is the MCA.DAT;2316 file number that

was associated with a particular sample number and stored in the count room logbook).

3.1.5. The remainder of the program queries you for pertinent information and is self-explanatory. The last question concerns the count date. After all the questions have been answered, the sample of the spectrum of interest is brought up on the screen and the areas in which you want to integrate can be delineated by bracketing the area with X's.

3.1.6. After each sample is analyzed, the program will ask you (1) whether the data should be sent to the database (DTR), (2) for another MCA.DAT number, or (3) whether you want to continue (Y/N). It will then query whether the same data file is to be used (Y/N) and whether you are ready to submit the data to the Datatrieve database (Y/N).

3.2. Generating efficiency values using GAMS.

Efficiency values are generated using the GAMS program. To initiate this program, type GAMS. The program will query you in the same manner as described above but will not send the results to the database. In this case, you want to generate an efficiency value/factor from a data set collected from a known standard. The following is an example of how a session should be completed (machine prompts are in capitals, and user responses are in capitals, underlined).

3.2.1. The program will ask you for a FILE NUMBER: 2316,1

3.2.2. SAMPLE ID: DET1, EFF DET

3.2.3. OWNER OF THE SAMPLE: GB

3.2.4. SPECIFIC ANALYSIS: CS-137

3.2.5. QUANTITY, BRANCHING RATIO, AND HALF-LIFE OF THE ISOTOPE: 101123.0,1.0,11012.0
(101123.0 is the total activity of the standard being used—in this case, it could be in pCi; 1.0 is the branching ratio, and 11012.0 is the half-life.)

3.2.6. AREA OF INTEREST IN THE SPECTRUM (CHANNELS): 640,680

3.2.7. EFFICIENCY, SIGEFF, DET BKG, AND UNITS: 1.0,0.01,0.001,EFF-PCI
(The efficiency is always 1.0 when calculating efficiency values, with the sigeff of 0.01 and the detector background at 0.001, and the units are efficiency-pCi, pCi being the units of the activity of the standard.)

3.2.8. TIME OF COLLECTION OF THE SAMPLES: 12,01,01/01/88

3.2.9. TIME OF COUNT OF THE SAMPLES: 12,02,01/01/88
(The value generated in the results section of the output is the value to be used for the new efficiency value when calculating activity levels of this matrix in the future.)

3.3. Generation of background values using GAMS.

The generation of background levels using the GAMS program is very similar to the example shown in Step 3.2. The only differences are the following.

3.3.1. SAMPLE INFORMATION: DET2 BKG

3.3.2. QUANTITY, FACTOR, HALF-LIFE: 100.0,1.0,11012.0
(Use the quantity of the blank being used: 100.0 for soils and biologicals, 0.5 L for waters.)

3.3.3. EFF,SIGEFF,DETBKG,UNITS: 0.013,0.15,0.001,C/M
(Use the efficiency values generated using the previous two methods; the sigeff will always be 0.15; use 0.001 as the background level; and use cpm as the units.)

3.3.4. After completing each section, along with the correct regions to integrate, the program will provide a value that reflects the level in cpm. Values range from 0.10—0.40 cpm for ^{137}Cs in silicates to a high of 1.0—3.0 cpm for ^{60}Co in other matrices.

Note: It is very important to correct for background levels, especially when the activity of the sample is at or near environmental backgrounds.

OPERATING THE TENNELEC LB5100 GROSS ALPHA/BETA PROPORTIONAL COUNTING SYSTEM

Procedure: Operating the Tennelec LB5100 Gross Alpha/Beta Proportional Counting System	**Method No.:** CR410
Effective Date: 08/21/90	**Author:** George Brooks

1. Introduction

1.1. The procedure defines the processes needed to perform routine sample analysis on the Tennelec LB5100 proportional counting system.

1.2. Contact the count room manager for additional information.

2. Procedure

2.1. Samples are prepared either by evaporating the liquid portion of the sample or by leaching of silicate samples. Regardless of which matrix is received, the sample arrives at the count room on a 2.0-in. stainless-steel planchet, covered with 0.004-in. Mylar. The bottom of the planchet is marked with the sample number and the gross and tare weights. A laboratory data sheet accompanies the sample, providing the sample number, request number, sample owner, volume or mass of original sample, and residual mass of the sample on the planchet.

2.2. Confirm that all samples noted on the laboratory data sheet are present. Obtain an Alpha/Beta Counting Sequence Data Sheet from on top of the counter or from the second shelf of the second cabinet from the right in the rear of the gamma-counting facility. Fill out the data sheet with the appropriate information.

2.3. Load the sample tray.

2.3.1. The first space in the sample tray is always reserved for the ^{239}Pu standard and the second for the $^{90}Sr/^{90}Y$ standard. These are followed by the group B divider and the blank planchet. This standard set should always be loaded into the detector. Next load the QC samples. Choose an appropriate set for the matrix of interest (filter QCs for filters, etc.). Note on the sample data sheet the sample tray numbers that these samples occupy. The samples are now ready to be loaded.

2.3.2. The standards, QC samples, and customer samples are loaded into the right vertical rack assembly on the proportional counter, with the numerical sequence ascending toward the top of the rack. Once all the

samples have been loaded, make sure that the aluminum block (the end plate) is loaded on top of the samples. This is a mechanical means of informing the counting system that there are no more samples. This then cues the system to restack the samples, if such instructions were given at the beginning of the protocol.

2.4. After all the samples are loaded and the system is readied, the proportional counter is ready to be initialized. The following steps outline the procedure to initiate the counting sequence.

2.4.1. Initialize the system in either of two ways: (1) turn the **OFF/INITIALIZE/RUN/HOLD** key from the **RUN** position to the **INITIALIZE** position then back to the **RUN** position; or (2) enter the letter **I** at the system prompt. Either command activates the system to begin the counting sequence and dump the data to the TI Silent 700 terminal for a hard copy.

2.4.2. The system will query you for information needed to start the counting sequence.

2.4.2.1. The first question concerns the mode of data acquisition you want to initiate: (1) single count, (2) multiple counts, (3) single count with restack, or (4) multiple counts with restack.

2.4.2.2. The first questions concern the identity of the group, the type of counting cycle, and whether the sample cycling set is to be averaged.

2.4.2.3. The program then asks for the count time. For the standards, the count time is 10 min. Because the time format in the program is xxxx.xx, you must type in <u>1000</u> for 10 min. The remaining questions can be skipped (default line mode) because we do not use these particular commands.

2.4.2.4. If you have two groups of samples, the program will ask for that information at the end of the program. The program will ask, DO YOU HAVE ANOTHER GROUP OF SAMPLES?, and you will respond with <u>YES</u>. When the program asks whether there are any more samples, and you respond with <u>NO</u>, it then prints out the information it asked of you and begins the counting sequence. The practicality of this option is that it allows you to break up the sample sets into some unique form that will help data reduction later.

2.4.3. If all the information parameters and the control panel are correctly set, the automated sample changer will load the samples into the counting chamber. If no motion of the sample rack is evident, there is a problem

with the sample changer. Contact the count room manager. If all the samples have been loaded and the counting sequence has begun, you should see counts accumulating on the LED display on the front control panel. If no counts are seen, contact the count room manager.

2.4.4. After the counting is complete, the terminal will print out a hard copy of the results. Tear off the copy and fasten it and all the other data information sheets together. The information is now ready to be transferred into data files, ready for final data reduction.

2.5. See Method No. CR420 for data-reduction procedures.

DATA REDUCTION FOR THE TENNELEC LB5100 GROSS ALPHA/BETA GAS-FLOW PROPORTIONAL COUNTING SYSTEM

Procedure: Data Reduction for the Tennelec LB5100 Gross Alpha/Beta Gas-Flow Proportional Counting System	**Method No.:** CR420
Effective Date: 08/27/90	**Author:** George Brooks

1. Introduction

1.1. This procedure defines the process for reducing the data acquired from the Tennelec LB5100 proportional counting system.

1.2. Contact the count room manager for additional information.

2. Procedure

2.1. After data is acquired from the counting system, it is entered into the appropriate file structure. This is followed by initiation of the data-reduction routine, which initiates both a printout of the reduced data set and the direct transfer of the data set into the EM-9 laboratory information management system (LIMS).

2.2. For the alpha/beta data-reduction routine, two types of file structure are needed: the identification file (AB.ID) and the data file (AB.DAT).

2.2.1. The first file to be created is the AB.ID;* file, which contains all the information necessary to associate the raw data with the appropriate sample information.

2.2.1.1. The format of the file is

```
87.03570 4992 KJ 7137.0 1.0 M..3
00.97106 9999 PG 1.0 1.0 M..3
```

The first line contains the sample number, followed by the request number, the sample owner, the sample volume or quantity, the sample mass, and the units (GRAM, LITER, or M..3 for air filters). The last lines in the file, associated with quality control samples, have the same format as above.

2.2.1.2. The file is created by using the line editor on the VAX, called EDT. To start an editing session, type <u>EDIT</u> followed by the file name. To create the AB.ID;* file, type <u>EDIT AB.ID;1</u>. The

computer will prompt with FILE DOES NOT EXIST. After the "*" character is displayed, type C (for change) and press the **RETURN** key. The screen will blank out and show an [EOB] character in the upper left-hand corner. You are now ready to create the ID file. Begin typing in the information as in Step 2.2.1.1. At the end of the file, type CTRL Z to return to the "*" prompt, then type EXIT to save the file. If you type QUIT instead of EXIT, you will exit the editing session without saving any of the information.

2.2.2. The next file to be created is the AB.DAT;* file, which contains all the raw data generated from the alpha/beta counting system.

2.2.2.1. The data should appear in the following format:

```
100  275  2569
100  654  4213
```

100 is the time (min) the samples were counted, 275 is the total alpha counts, and 2569 is the total beta counts. These counts are taken from the raw data generated by the counting system. (An example of the data sheet can be seen in Fig. 3 in Method No. ER100). You must remember that the sequence of information in the two files must be replicated so that the information is correctly associated with the proper sample. The information must be in the same order in the ID and DAT files (i.e., samples first, followed by the QCs in the ID file; the alpha and beta counts of the samples come first, followed by the alpha and beta counts of the QCs). It is also very important to remember which revision level goes with each data set. In most cases, you will be using only one revision level at a time. In the event of multiple sets of data, you must connect the correct revision sets with each set of data.

2.2.2.2. These files are created in the same fashion by using the VAX line editor EDT. An example is shown in Section 2.2.1.2 (above).

2.3. When all the files have been created and reside on the VAX, data reduction can proceed.

2.3.1. All files will be reduced under the program REDUCE in the LIMS menu. To invoke this program, type LIMS, which will produce the main menu. Within this menu, select the REDUCE option. The program will provide a list of subprograms that you can choose from. The alpha/beta data-reduction program is

invoked by choosing the option AB. The program will blank out the screen, then ask you the following questions.

2.3.1.1. The revision level of the AB.ID;* file that will be used.

2.3.1.2. The revision level of the AB.DAT;* file that will be used.

2.3.1.3. The ALPHA STD CPM a, ALPHA STD CPM b.

2.3.1.4. The BETA STD CPM a, BETA STD CPM b.

2.3.1.5. BACKGROUND CPM a followed by BACKGROUND CPM b.

2.3.1.6. If filters were analyzed, the program will ask for the fraction of filter analyzed. For all the Española filters collected by the Environmental Surveillance group (EM-8), use a value of 2.31; for the EPA and QA filters, use a value of 1.00. Remember the number of sample filters and QA filters, because the program will query for every sample fraction in the ID file. If you have 18 samples and 2 QAs, the program will prompt you 20 times. You should answer 18 times with 2.31 and the last 2 times with 1.0. Contact the count room manager for additional information. The program will end with questions concerning whether you are ready to submit the samples to the database (DTR). If you are ready for sample submittal, this ends the program and all user prompts.

2.4. The program then sends a copy of the data output to the line printer outside the door to the system manager's office. You should append the copy to the alpha/beta routine counting logbook. This documents that the sample set has been run. If the customer has any problems with the data, we can go back to this archived information and try to isolate the problem and determine why the results may be in error.

LA-10300-M Vol. IV
Manual

UC-907
Issued: May 1986
Revised: November 1993

Health and Environmental Chemistry: Analytical Techniques, Data Management, and Quality Assurance

Edited by Margaret A. Gautier

Los Alamos
NATIONAL LABORATORY
Los Alamos, New Mexico 87545

CONTENTS

Preface QC-5

Acknowledgments QC-7

Abstract QC-9

The page numbering convention used in this manual consists of the specific procedure number (shown at left in list below) followed by the page number for that procedure. Thus, QCI110-2 is page two of procedure QCI110. The right column in the list below gives each procedure's status or effective date.

Quality Control Analytical Techniques

Quality Control Analytical Procedures - Inorganic

QCI100 Beryllium and Lead for Vegetation Ash—QC Sample Preparation 02/93

QCI110 TCLP Elements for Water and Soil—QC Sample Preparation 10/92

QCI120 Oil and Grease in Water—QC Sample Preparation 03/93

QCI130 TCA in Urine—QC Sample Preparation . . . . . In Progress

QCI140 Trace Elements on Filter Media—QC Sample Preparation 09/92

QCI150 Trace Elements in Solvent—QC Sample Preparation 09/92

QCI160 Trace Elements in Urine—QC Sample Preparation . . . . . In Progress

QCI170 Trace Elements in Nitric Acid—QC Sample Preparation 10/92

QCI180 Trace Elements in Hydrochloric Acid—QC Sample Preparation 10/92

QCI190 Trace Elements in Water—QC Sample Preparation 10/92

QCI200 Trace Elements for Water and Soil (Hg by TCLP)—QC Sample Preparation 03/93

QCI210 Trace Elements in Water (CN)—QC Sample Preparation 03/93

QCI220 Trace Elements in Water (NO_2-N)—QC Sample Preparation 03/93

Quality Control Analytical Procedures - Organic

QCO100 Formaldehyde on Tubes—QC Sample Preparation 07/93

QCO110 Herbicides on Soil—QC Sample Preparation 07/93

QCO120 Herbicides in Water—QC Sample Preparation 07/93

QCO130 Organic Compounds on Tubes and Badges—QC Sample Preparation .. 08/92

QCO140 Pesticides on Soil—QC Sample Preparation 07/93

QCO150 Pesticides in Water—QC Sample Preparation 07/93

QCO160 Polychlorinated Biphenyls on Florisil Tubes—
QC Sample Preparation ..... In Progress

QCO170 Polychlorinated Biphenyls in Oil—QC Sample Preparation 09/93

QCO180 Polychlorinated Biphenyls in Water—QC Sample Preparation 07/93

QCO190 Polychlorinated Biphenyls on Soil—QC Sample Preparation 09/93

QCO200 Polychlorinated Biphenyls on Swipes—QC Sample Preparation 09/93

QCO210 Semivolatile Organic Compounds on Soil—QC Sample Preparation ... 08/92

QCO220 Semivolatile Organic Compounds in Water—QC Sample Preparation .. 08/92

QCO225 Total Petroleum Hydrocarbons on Soil—QC Sample Preparation 07/93

QCO230 Volatile Organic Compounds on Charcoal Tubes—
QC Sample Preparation ..... In Progress

QCO240 Volatile Organic Compounds in Oil—QC Sample Preparation ... In Progress

QCO250 Volatile Organic Compounds on Soil—QC Sample Preparation 08/92

QCO260 Volatile Organic Compounds in Water—QC Sample Preparation 08/92

Quality Control Analytical Procedures - Radiochemistry

QCR100	Americium-241 in Urine—QC Sample Preparation	09/92
QCR110	Cesium-137 on Soil—QC Sample Preparation	02/93
QCR120	Cesium-137 on Vegetation Ash—QC Sample Preparation	02/93
QCR130	Cesium-137 in Water—QC Sample Preparation	02/93
QCR140	Gross Alpha and Gross Beta on Soil—QC Sample Preparation	03/93
QCR150	Gross Alpha and Gross Beta in Water—QC Sample Preparation	03/93
QCR153	Gross Gamma on Soil—QC Sample Preparation	07/93
QCR155	Gross Gamma in Water—QC Sample Preparation	07/93
QCR160	Plutonium and Americium on Soil—QC Sample Preparation	02/93
QCR170	Radionuclides on Vegetation Ash—QC Sample Preparation	02/93
QCR180	Plutonium and Americium in Water—QC Sample Preparation	02/93
QCR190	Plutonium-238 in Urine—QC Sample Preparation	09/92
QCR200	Plutonium-239 in Urine—QC Sample Preparation	09/92
QCR210	Radionuclides on Filter Media—QC Sample Preparation	03/93
QCR220	Radium-226 in Water—QC Sample Preparation	02/93
QCR230	Strontium-90 on Soil—QC Sample Preparation	02/93
QCR240	Strontium-90 in Water—QC Sample Preparation	09/92
QCR250	Tritium and Percent Moisture on Soil—QC Sample Preparation	02/93
QCR260	Tritium in Urine—QC Sample Preparation	09/92
QCR270	Tritium in Water—QC Sample Preparation	03/93
QCR280	Uranium in Soil—QC Sample Preparation	02/93
QCR290	Uranium-235 in Urine—QC Sample Preparation	Retired

QCR300	Uranium-238 in Urine—QC Sample Preparation	Retired

Miscellaneous Procedures

	General Procedure for Cleaning Laboratory Equipment	In Progress
QCM200	Preparation of a Vegetation Ash Matrix	03/93

Quality Control Analytical Procedures - Intercomparison Studies

QCS100	EPA Air Filter Intercomparison Study	05/93
QCS110	DOE Beryllium Intercomparison Study	In Progress
QCS120	EPA Drinking Water Study	In Progress
QCS130	EPA Gamma in Water Intercomparison Study	05/93
QCS140	EPA Gross Alpha and Beta in Water Intercomparison Study	05/93
QCS150	EPA Performance Evaluation Study	05/93
QCS160	NPDES Study	In Progress
QCS170	NIOSH PAT Program	In Progress
QCS180	EPA Plutonium in Water Intercomparison Study	05/93
QCS190	EML Quality Assessment Program	In Progress
QCS200	EPA Radionuclides in Milk Intercomparison Study	05/93
QCS210	EPA Radium in Water Intercomparison Study	05/93
QCS220	EPA Strontium in Water Intercomparison Study	05/93
QCS230	EPA Tritium in Water Intercomparison Study	05/93
QCS240	EPA Uranium in Water Intercomparison Study	05/93
QCS250	EPA Water Pollution Study	In Progress

FORMALDEHYDE ON TUBES — QC SAMPLE PREPARATION

Analyte: Formaldehyde	**Method No.:** QCO100
Matrix: Orbo 24 sorbent beads	**Spike Range:** 4-60 μg/sample
Procedure: Analysis by gas chromatography with a mass selective detector	**Accuracy and Precision:** 100% ± 3.3% RSD
Effective Date: 05/08/91	**Authors:** Nancy L. Koski Margaret A. Gautier

SAFETY NOTE: Before beginning this procedure, read all of the Material Safety Data Sheets for the chemicals listed in Sec. 5. Read Sec. 4.3 of the EM-9 Safety Manual for information on personal protective clothing and equipment. Read Sec. 9 of this procedure and Source Material 10.3 for proper waste disposal practices.

1. Principle of Method

1.1. Prepare a stock solution of formaldehyde in water.

1.2. Spike the stock solution onto XAD-2 beads coated with 2-(hydroxymethyl)piperidine in an autosampler vial.

2. Accuracy and Precision

2.1. The propagated error on QC preparation is based on the error of the standard and on the error associated with use of the microsyringe, balance, and volumetric flask. The formaldehyde in the reagent solution is assigned a 100% purity and the assumption is made that M1 = 1. A relative standard deviation (RSD) of 3.3% at the 1σ level has been calculated for the error of the standard and for the spiking, weighing, and dilution process based on the following function:

$$D = \frac{M1 \times M2 \times M4}{M3},$$

where D = calculated result,
M1 = standard error,
M2 = weighing error,
M3 = dilution error, and
M4 = spiking error.

2.1.1. Calculate relative variance using the following equation.

$$R_M^2 = \frac{\sigma^2}{\overline{X}^2} ,$$

where R^2_M = relative variance,
M = $M_1 \ldots M_n$ (variable),
σ^2 = variance (std dev^2), and
$\overline{X}$ = mean value of each variable (M).

2.1.2. Calculate percent relative standard deviation using the following equation. The formaldehyde in the reagent solution is assigned a 100% purity and the assumption is made that $R^2_{M1} = 0$.

$$S_{D_T} = \sqrt{R^2_{M1} + R^2_{M2} + R^2_{M3} + R^2_{M4}} \times 100 ,$$

where SD_T = relative standard deviation (% error),
R^2_{M1} = relative variance of standard,
R^2_{M2} = relative variance of balance,
R^2_{M3} = relative variance of volumetric flask,
R^2_{M4} = relative variance of microsyringe, and
100 = factor to convert to percentage.

2.2. Analysis by gas chromatography of QC samples prepared between June 1991 and February 1993 using this procedure (N = 24) gave a mean recovery of 92% ± 14% at the 1σ level. The data are published in Source Material 10.1.

3. Collection and Storage of Samples

3.1. The beads are transferred to an autosampler vial before spiking because the static charge which develops on the wetted beads would prevent quantitative transfer of the beads from a sorbent tube into an extraction vessel.

3.2. A study performed in 1991 and 1992 indicates that spiked samples are stable for at least 5 months stored in a freezer at -4°C.

4. Apparatus

4.1. Volumetric flask: 5-mL, class A, glass.

4.2. Pipettes: Pasteur, disposable, glass.

4.3. Bulbs: rubber, to fit Pasteur pipettes.

4.4. Syringe: gas-tight, 10-, 25-, and 50-μL.

4.5. Analytical balance: 100-g minimum capacity, 0.1-mg accuracy.

4.6. Sorbent tube: 150-mg primary bed, 75-mg backup bed, XAD-2 coated with 2-(hydroxymethyl)piperidine, such as Orbo-24, to absorb formaldehyde.

4.7. File: triangular.

4.8. Tweezers.

4.9. Autosampler vials, 11- × 30-mm vials , with crimp-top caps and silicon cap liners with Teflon face.

4.10. Portable crimper for sealing caps on autosampler vials.

4.11. Teflon tape.

4.12. Drying oven: capable of sustaining 100-150°C.

4.13. Labels: printed with QC sample numbers.

5. Reagents

5.1. Distilled water. Use water that has not been run through plastic tubing or stored in plastic holding vessels because phthalates may leach from plastics and contaminate the sample.

6. Calibration and Standards

6.1. Formaldehyde (analytical-grade). The reagent will be approximately 37.4 wt % formaldehyde in water. The percent purity must be included in the calculations for the concentration of the stock solution. See Step 8.2.

CAUTION: Formaldehyde is an OHSA-regulated carcinogen. Work with formaldehyde in an approved fume hood.

6.2. Add approximately 4 mL of distilled water to a 5-mL volumetric flask and stopper the flask.

6.3. Place the stoppered flask on an analytical balance and tare the balance.

6.4. Calculate the volume of formaldehyde solution needed to make a stock solution containing 5-10 mg of formaldehyde in 5 mL of solution. Include the percent purity of the formaldehyde solution in the calculations. See Step 8.1.

6.5. Add the formaldehyde to the flask from a syringe just above the surface of the water. Stopper the flask and record the mass and volume of formaldehyde solution added.

6.6. Dilute the solution to volume with distilled water.

6.7. Mix by inversion.

6.8. Label the flask with information identifying the standard.

6.9. Wrap Teflon tape around the stopper of the volumetric flask and store the solution in the refrigerator.

7. Procedure

7.1. Cleaning of glassware.

7.1.1. Wash volumetric flasks with detergent and rinse them with hot tap water and methanol.

7.1.2. Store the glassware in a laboratory oven maintained at 100-150°C to minimize contamination.

7.2. Cleaning of syringes.

7.2.1. Dedicate a group of syringes for use with formaldehyde.

7.2.2. Fill the syringe with methanol through the needle. Discard the methanol into a waste container. Repeat a total of 5-10 times.

7.2.3. Dry the syringe by pulling a vacuum on it for a minimum of 10 min.

7.3. Preparation of QC samples.

7.3.1. Prepare QC samples to equal at least 10% of the total number of samples to be analyzed.

7.3.2. This procedure describes the preparation of two QC samples using the beads from one sorbent tube.

CAUTION: Formaldehyde is an OSHA-regulated carcinogen. Work with formaldehyde in an approved fume hood.

7.3.2.1. Remove the flask of formaldehyde stock solution from the refrigerator and allow it to reach room temperature.

7.3.2.2. Open the formaldehyde sorbent tube.

7.3.2.3. Remove the glass wool plugs with tweezers and divide the beads from both beds evenly between two autosampler vials.

7.4.4. Using a gas-tight syringe, spike an aliquot of the formaldehyde stock solution onto the beads to reach the desired spike range. Avoid wetting the vial walls.

7.4.5. Seal a cap onto the vial. Wrap Teflon tape over and around the cap.

7.4.6. Label the vial with a QC sample number.

7.4.7. Return the flask containing the formaldehyde stock solution to the refrigerator.

7.4.8. Record QC standard information, sample number, sample description, spike amount, concentration, uncertainty, and all calculations in the QC Laboratory notebook and enter them into the CVS and CVD databases on the VAX.

7.4.9. Store the samples in a freezer pending analysis. Samples are stable for at least 5 months stored at -4°C.

8. Calculations

8.1. Calculate the volume of formaldehyde solution to dilute to 5-mL as in the following example.

8.1.1. The desired weight spike range for 5-mL of formaldehyde stock solution is 5-10 mg of formaldehyde.

8.1.2. Formaldehyde reagent is approximately 37.4 wt % formaldehyde in water. The density of a 37.4 wt % solution is 1.083 mg/μL.

8.1.3. Divide the weight spike range by the density and the purity of the formaldehyde reagent to determine the volume spike range of formaldehyde reagent to use in 5 mL of stock solution.

$$8\frac{5\text{ mg}}{(1.083\text{ mg}/\mu\text{L})\ (0.374)}\ \text{to}\ \frac{10\text{ mg}}{(1.083\text{ mg}/\mu\text{L})\ (0.374)} = 12.3\text{ to }24.7\ \mu\text{L}\ .$$

Dilute 12.3-24.7 μL of 37.4 wt % formaldehyde reagent to 5 mL to reach the desired concentration range of 1-2 mg/mL formaldehyde in the stock solution.

8.2. Calculate the concentration of formaldehyde in the stock solution as in the following example.

8.2.1. If 20 μL of 37.4 wt % formaldehyde reagent, weighing 21.7 mg, is diluted to 5 mL with distilled water, the concentration of formaldehyde in the stock solution is 1.62 mg/mL.

$$\frac{(21.7\ \text{mg})\ (0.374)}{5\ \text{mL}} = 1.62\ \text{mg/mL}\ .$$

8.3. Calculate the concentration of formaldehyde in the QC sample as in the following example.

8.3.1. If 15 μL of a stock solution containing 1.62 mg/mL of formaldehyde is spiked onto sorbent beads in an autosampler vial, the concentration of formaldehyde in the sample is 24 μg/sample.

$$\frac{\left(\frac{1.62\ \text{mg}}{1\ \text{mL}}\right)\left(\frac{1\ \text{mL}}{1000\ \mu\text{L}}\right)\left(\frac{1000\ \mu\text{g}}{1\ \text{mg}}\right)(15\ \mu\text{L})}{\text{sample}} = 24\ \mu\text{g/sample}\ .$$

Multiply the result by the RSD calculated in Step 2.1 to obtain the uncertainty.

8.4. Record the formaldehyde concentration in the QC sample in μg/sample.

9. Proper Waste Disposal Practices

9.1. Solid waste.

9.1.1. Accumulate solid waste, such as paper wipes, glass or plastic pipettes, empty vials, and incorrectly spiked QC samples contaminated with organic compounds in a covered metal can lined with a plastic bag and keep it segregated from PCB-contaminated solid waste and solid waste that is not contaminated with organic compounds.

9.1.2. Label the can with a hazardous waste label and a label indicating its use for waste contaminated with organic compounds.

9.1.3. Open the can only for the time necessary to add waste.

9.1.4. When the plastic bag is full, seal it with tape, remove it from the can, and identify it as waste contaminated with organic compounds.

9.1.5. Place a new plastic bag into the waste can for continued use.

9.1.6. Accumulate the sealed bags in a larger container lined with a plastic bag and approved for the storage and transport of waste contaminated with organic compounds.

9.1.7. Identify the sealed bag with the current Waste Profile Request Form (WPRF) number describing the waste in the bag.

9.1.8. Label the larger container with a hazardous waste label and a label indicating its use for waste contaminated with organic compounds.

9.1.9. The larger container has a sealing cover. Open the can only for the time necessary to add waste.

9.1.10. When the plastic bag liner is full, seal it with tape and keep it in the sealed container pending pickup by the Waste Management group.

9.2. Liquid waste.

9.2.1. Accumulate liquid waste containing organic compounds, such as rinses from syringes, out-of-date stock solutions, excess QC samples, and incorrectly spiked samples, in a covered metal can in a secondary containment tray and keep it segregated from PCB-contaminated liquid waste and waste that does not contain organic compounds.

9.2.2. Label the can with a hazardous waste label and a label indicating its use for waste containing organic compounds.

9.2.3. Open the can only for the period of time necessary to add waste.

9.2.4. When the can is full, cap it and keep it in the secondary containment tray pending pickup by the Waste Management group.

9.2.5. Label a new can for further use.

9.3. Waste pickup.

9.3.1. Request pickup by the Waste Management group of a full container of waste contaminated with organic compounds using the current Chemical Waste Disposal Request (CWDR) form. Reference the current Waste Profile Request Form (WPRF) describing the waste on the CWDR.

9.3.2. The Waste Management group picks up the waste for disposal in accord with Laboratory policy.

10. Source Materials

10.1. M. A. Gautier, E. S. Gladney, N. L. Koski, M. B. Phillips, E. A. Jones, and B. T. O'Malley, "Quality Assurance for Health and Environmental Chemistry: 1991," Los Alamos National Laboratory report LA-12436-MS.

10.2. M. A. Gautier, N. L. Koski, E. A. Jones, and B. T. O' Malley "Quality Assurance for Health and Environmental Chemistry: 1992," Los Alamos National Laboratory report (in preparation).

10.3. "Hazardous and Mixed Waste," Administrative Requirement 10-3, in *Environment, Safety, and Health Manual*, Los Alamos National Laboratory Manual, Chapter 1 (most recent edition).

HERBICIDES ON SOIL — QC SAMPLE PREPARATION

Analyte: Herbicides	**Method No.:** QCO110
Matrix: Soil	**Spike Range:** 20-300 μg/kg
Procedure: Analysis by solid phase extraction followed by gas chromatography with electron capture detection	**Accuracy and Precision:** 100% ± 4.4%
Effective Date: 01/01/90	**Authors:** Nancy L. Koski Margaret A. Gautier

SAFETY NOTE: Before beginning this procedure, read all of the Material Safety Data Sheets for the chemicals listed in Sec. 5. Read Sec. 4.3 of the EM-9 Safety Manual for information on personal protective clothing and equipment. Read Sec. 9 of this procedure and Source Material 10.3 for proper waste disposal practices.

1. Principle of Method

1.1. Prepare a stock solution in methanol of herbicides selected primarily from the list in Section 6, Table I.

1.2. Prepare a 1:50 dilution in methanol of the stock solution.

1.3. Spike the 1:50 dilution directly onto blank soil.

2. Accuracy and Precision

2.1. The propagated error on QC preparation is based on the error of the standard and on the error associated with use of the microsyringe, volumetric flask, and balance. A relative standard deviation (RSD) of 4.4% at the 1σ level has been calculated for the error of the standard and for the spiking and weighing process based on the following function:

$$D = \frac{M1 \times M2 \times M4 \times M6}{M3 \times M5 \times M7},$$

where D = calculated result,
M1 = standard error,
M2 = first weighing error,
M3 = first dilution error,
M4 = first spiking error,

M5 = second dilution error,
M6 = second spiking error, and
M7 = second weighing error.

2.1.1. Calculate relative variance using the following equation.

$$R_M^2 = \frac{\sigma^2}{\overline{X}^2} ,$$

where R^2_M = relative variance,
M = $M_1 \ldots M_n$ (variable),
σ^2 = variance (std dev^2), and
$\overline{X}$ = mean value of each variable (M).

2.1.2. Calculate percent relative standard deviation using the following equation.

$$S_{D_T} = \sqrt{R^2_{M1} + R^2_{M2} + R^2_{M3} + R^2_{M4} + R^2_{M5} + R^2_{M6} + R^2_{M7}} \times 100 ,$$

where SD_T = relative standard deviation (% error),
R^2_{M1} = relative variance of standard,
R^2_{M2} = relative variance of first balance,
R^2_{M3} = relative variance of first volumetric flask,
R^2_{M4} = relative variance of first microsyringe,
R^2_{M5} = relative variance of second volumetric flask,
R^2_{M6} = relative variance of second microsyringe,
R^2_{M7} = relative variance of second balance, and
100 = factor to convert to percentage.

2.2. Analysis by solid phase extraction and gas chromatography of QC samples (N = 5) prepared using this procedure since October 1990 are summarized and tabulated below. The data are published in Source Materials 10.1 and 10.2.

Herbicides on Soil Spike Recovery Data		
Compound	% Recovery Mean ± RSD	(N)
2,4-D	82 ± 18	(5)
Silvex	94 ± 24	(5)
2,4,5-T	93 ± 14	(4)

3. Collection and Storage of Samples

3.1. The blank soil matrix and the spiked samples should be stored in glass bottles fitted with Teflon-lined lids. Avoid using plastic containers and lids because phthalates, which are semivolatile compounds, may leach from plastics and contaminate the sample.

3.2. Spiked QC samples are refrigerated pending analysis. The maximum holding time for the analysis of herbicides on soil is 7 d.

4. Apparatus

4.1. Volumetric flasks: 5- and 100-mL, class A, glass.

4.2. Syringes: gas-tight, 25-, 50-, 100-, and 250-μL.

4.3. Spatulas.

4.4. Pipettes: Pasteur, glass.

4.5. Bulbs: rubber, to fit Pasteur pipettes.

4.6. Bottles: 2-oz, amber, glass, with Teflon-lined caps.

4.7. Vials: 1.5-mL, amber, glass.

4.8. Caps: open-top to fit vials.

4.9. Septa: Teflon/silicone discs to fit open-top caps.

4.10. Teflon tape.

4.11. Bottles: 2-oz, glass, with Teflon-lined caps.

4.12. Analytical balance: 200-g minimum capacity, 0.1-mg accuracy.

4.13. Laboratory oven: capable of sustaining 100-150°C.

4.14. Labels: printed with QC sample numbers.

5. Reagents

5.1. Soil: a clean, dry 5-g aliquot is required for each sample.

5.1.1. A suitable soil does not contain the analyte of interest and presents few interferences to the analytical method.

5.1.2. Blank soil heated to nominally 100°C for 5 hours and stored in glass is used as a sample matrix.

5.2. Methanol (analytical-grade).

6. Calibration and Standards

6.1. Prepare a stock solution of neat, standard-grade herbicides selected primarily from the list in Table I. Use Chem Service or equivalent chemicals (Chem Service, Inc., Box 3108, West Chester, PA 19387). Use the free acid form of the herbicides, not the methyl esters, since the compounds are esterified during the analytical procedure.

6.1.1. Determine the desired concentration of each analyte in the stock solution. Typical ranges for the concentrated stock solution are listed in Table I. The concentration of an analyte in the stock solution may be varied depending on the desired spike range for the analyte in the QC sample.

TABLE I. TYPICAL CONCENTRATION RANGES FOR QC SAMPLES AND CONCENTRATED STOCK SOLUTIONS FOR VARIOUS HERBICIDES

Compound	CAS number	QC samples, μg/g	Concentrated stock, mg/mL
2,4-D	94757	0.10-0.30	0.50-1.50
Silvex	93721	0.05-0.15	0.25-0.75
2,4,5-T	93765	0.05-0.15	0.25-0.75
Dinoseb	88857	0.02-0.07	0.10-0.35

6.1.2. Add the desired amount of a solid herbicide analyte to a clean, tared, 100-mL volumetric flask. Record the mass and tare the balance. Repeat for each solid analyte.

6.1.3. Add approximately 80 mL of methanol to the flask and swirl it to dissolve all the analytes.

6.1.4. Dilute the solution to volume with methanol.

6.1.5. Mix by inversion.

6.1.6. Transfer the stock to 2-oz amber bottles with Teflon-lined lids. Cap the bottles and wrap Teflon tape around the caps.

6.1.7. Label the bottles with information identifying the standard.

6.1.8. The stock is stable for at least 3 months stored in a refrigerator.

6.2. Prepare a 1:50 dilution of the stock solution.

6.2.1. Remove the concentrated stock from the refrigerator and allow it to reach room temperature before making a dilution.

6.2.2. Add approximately 4 mL of methanol to a clean 5-mL volumetric flask.

6.2.3. Add 100 μL of the stock solution from a gas-tight syringe just above the surface of the methanol.

6.2.4. Dilute the solution to volume with methanol.

6.2.5. Mix by inversion.

6.2.6. Transfer the dilution to 1.5-mL amber vials fitted with Teflon septa and caps. Wrap Teflon tape over and around the cap.

6.2.7. Label the vials with information identifying the standard.

6.2.8. Return the concentrated stock to the refrigerator.

6.2.9. The dilution is stable for at least 3 months stored in a refrigerator.

7. Procedure

7.1. Cleaning of glassware.

7.1.1. Wash volumetric flasks with detergent and rinse them with hot tap water and methanol.

7.1.2. Store the glassware in a laboratory oven maintained at 100-150°C to minimize contamination.

7.2. Cleaning of syringes.

7.2.1. Dedicate a group of syringes for use with herbicide analytes.

7.2.2. Fill the syringe with methanol through the needle. Discard the methanol into a waste container. Repeat a total of 5-10 times.

7.2.3. Dry the syringe by pulling a vacuum on it for a minimum of 10 min.

7.3. Prepare QC samples to equal at least 10% of the total number of samples to be analyzed.

7.3.1. This procedure describes the preparation of a herbicide on soil QC sample using 5 g of blank soil. A different size soil sample may be used, adjusting the spike volume of herbicide stock to reach the desired spike range.

7.3.2. Remove a vial of 1:50 dilution of herbicide stock standard from the refrigerator and allow it to reach room temperature. Do not let the vial sit at room temperature for longer than two hours before spiking the QC sample.

7.3.3. Accurately weigh 5 g of blank soil into a 2-oz glass bottle with a Teflon-lined lid. Record the mass of soil on the bottle with a felt-tipped pen for reference by the analyst.

7.3.4. Using a gas-tight syringe, spike an aliquot of the standard onto the surface of soil to reach the desired spike range. Blank QC samples may be made by spiking methanol onto the soil. The analyst will use the entire sample.

7.3.5. Cap the bottle and label it with a QC sample number.

7.3.6. Return the 1:50 dilution of the standard to the refrigerator.

7.3.7. Refrigerate the QC sample pending analysis. The maximum holding time for herbicides on soil QC samples is 7 d.

7.4. Record QC standard information, sample number, sample description, spike amount, concentration, uncertainty, and all calculations in the QC Laboratory notebook and enter them into the CVS and CVD databases on the VAX.

8. Calculations

8.1. Calculate the concentration of each analyte in the stock solution as in the following example.

8.1.1. If 75.0 mg of 2,4-D is dissolved in 100.0 mL of methanol, the concentration of 2,4-D in the stock solution is 0.75 mg/mL.

$$\frac{75\ \text{mg}}{100\ \text{mL}} = 0.75\ \text{mg/mL}\ .$$

8.2. Calculate the concentration of each analyte in the 1:50 dilution of the stock solution as in the following example.

8.2.1. If 100 μL of a stock solution containing 0.75 mg/mL of 2,4-D is diluted to 5 mL with methanol, the concentration of 2,4-D in the 1:50 dilution is 15 μg/mL.

$$\frac{\left(\frac{0.75\ \text{mg}}{1\ \text{mL}}\right)\left(\frac{1\ \text{mL}}{1000\ \mu\text{L}}\right)(100\ \mu\text{L})\left(\frac{1000\ \mu\text{g}}{1\ \text{mg}}\right)}{5\ \text{mL}} = 15\ \mu\text{g/mL}\ .$$

8.3. Calculate the concentration of each analyte in the QC sample as in the following example.

8.3.1. If 70 μL of a 1:50 stock dilution containing 15 μg/mL of 2,4-D is spiked onto 5.0000 g of blank soil, the concentration of 2,4-D in the QC sample is 210 μg/kg.

$$\frac{\left(\frac{15\ \mu\text{g}}{1\ \text{mL}}\right)\left(\frac{1\ \text{mL}}{1000\ \mu\text{L}}\right)(70\mu\text{L})}{5.0000\ \text{g}\left(\frac{1\ \text{kg}}{1000\ \text{g}}\right)} = 210\ \mu\text{g/kg}\ .$$

Multiply the result by the RSD calculated in Step 2.1 to obtain the uncertainty.

8.3. Record analyte concentrations in the QC sample in μg/kg or μg/g.

9. Proper Waste Disposal Practices

9.1. Solid waste.

9.1.1. Accumulate solid waste, such as paper wipes, glass or plastic pipettes, empty vials, and incorrectly spiked QC samples contaminated with organic compounds in a covered metal can lined with a plastic bag and keep it segregated from PCB-contaminated solid waste and solid waste that is not contaminated with organic compounds.

9.1.2. Label the can with a hazardous waste label and a label indicating its use for waste contaminated with organic compounds.

9.1.3. Open the can only for the time necessary to add waste.

9.1.4. When the plastic bag is full, seal it with tape, remove it from the can, and identify it as waste contaminated with organic compounds.

9.1.5. Place a new plastic bag into the waste can for continued use.

9.1.6. Accumulate the sealed bags in a larger container lined with a plastic bag and approved for the storage and transport of waste contaminated with organic compounds.

9.1.7. Identify the sealed bag with the current Waste Profile Request Form (WPRF) number describing the waste in the sealed bag.

9.1.8. Label the larger container with a hazardous waste label and a label indicating its use for waste contaminated with organic compounds.

9.1.9. The larger container has a sealing cover. Open the can only for the time necessary to add waste to it.

9.1.10. When the plastic bag liner is full, seal it with tape and keep it in the sealed container pending pickup by the Waste Management group.

9.2. Liquid waste.

9.2.1. Accumulate liquid waste containing organic compounds, such as rinses from syringes, excess QC samples, and incorrectly spiked QC samples, in a covered metal can in a secondary containment tray.

9.2.1.1. Keep liquid waste containing organic compounds segregated from PCB-contaminated liquid waste and from waste that does not contain organic compounds.

9.2.1.2. Label the can with a hazardous waste label and a label indicating its use for waste containing organic compounds.

9.2.1.3. Open the can only for the time necessary to add waste.

9.2.1.4. When the can is full, cap it and keep it in the secondary containment trap pending pickup by the Waste Management group.

9.2.1.5. Label a new can for future use.

9.2.2. Accumulate 2-mL vials containing out-of-date spiking solutions of organic compounds in a glass jar in a secondary containment tray.

9.2.2.1. Keep solutions which are not contaminated with PCBs segregated from those which are PCB contaminated.

9.2.2.2. Label the bottle with a hazardous waste label and a label indicating its use for waste containing organic compounds.

9.2.2.3. Open the bottle only for the time necessary to add vials.

9.3. Waste pickup.

9.3.1. Request pickup by the Waste Management group of a full container of waste contaminated with organic compounds using the current Chemical Waste Disposal Request (CWDR) form. The current Waste Profile Request Form (WPRF) that describes the waste is referenced on the CWDR.

9.3.2. The Waste Management group picks up the waste for disposal in accord with Laboratory policy.

10. Source Materials

10.1. M. A. Gautier, E. S. Gladney, N. L. Koski, E. A. Jones, and B. T. O'Malley, "Quality Assurance for Health and Environmental Chemistry: 1990," Los Alamos National Laboratory report LA-12208-MS (1991).

10.2. M. A. Gautier, E. S. Gladney, N. L. Koski, E. A. Jones, and B. T. O'Malley, "Quality Assurance for Health and Environmental Chemistry: 1991," Los Alamos National Laboratory report LA-12436-MS (1992).

10.3. "Hazardous and Mixed Waste," Administrative Requirement 10-3, in *Environment, Safety, and Health Manual*, Los Alamos National Laboratory Manual, Chapter 1 (most recent edition).

HERBICIDES IN WATER — QC SAMPLE PREPARATION

Analyte: Herbicides	**Method No.:** QCO120
Matrix: Water	**Spike Range:** 0.01-1.2 μg/L
Procedure: Analysis by solid phase extraction followed by gas chromatography with electron capture detection	**Accuracy and Precision:** 100% ± 4.4%
Effective Date: 04/01/90	**Authors:** Nancy L. Koski Margaret A. Gautier

SAFETY NOTE: Before beginning this procedure, read all of the Material Safety Data Sheets for the chemicals listed in Sec. 5. Read Sec. 4.3 of the EM-9 Safety Manual for information on personal protective clothing and equipment. Read Sec. 9 of this procedure and Source Material 10.3 for proper waste disposal practices.

1. Principle of Method

1.1. Prepare a stock solution in methanol of herbicides selected primarily from the list in Section 6, Table I.

1.2. Prepare a 1:500 dilution in methanol of the stock solution.

1.3. Spike the 1:500 dilution directly into distilled water.

2. Accuracy and Precision

2.1. The propagated error on QC preparation is based on the error of the standard and on the error associated with use of the balance, microsyringe, and volumetric flask. A relative standard deviation (RSD) of 4.4% at the 1σ level has been calculated for standard preparation and for the weighing, spiking, and dilution process based on the following function:

$$D = \frac{M1 \times M2 \times M4 \times M6}{M3 \times M5 \times M7},$$

where D = calculated result,
M1 = standard error,
M2 = weighing error,
M3 = first dilution error,
M4 = first pipette error,

M5 = second dilution error,
M6 = second pipette error, and
M7 = third dilution error.

2.1.1. Calculate relative variance for each variable using the following equation.

$$R_M^2 = \frac{\sigma^2}{\overline{X}^2} ,$$

where R^2_M = relative variance,
M = $M_1 \ldots M_n$ (variable),
σ^2 = variance (std dev^2), and
$\overline{X}$ = mean value of each variable (M).

2.1.2. Calculate percent relative standard deviation using the following equation.

$$S_{D_T} = \sqrt{R^2_{M1} + R^2_{M2} + R^2_{M3} + R^2_{M4} + R^2_{M5} + R^2_{M6} + R^2_{M7}} \times 100 ,$$

where SD_T = relative standard deviation (% error),
R^2_{M1} = relative variance of standard,
R^2_{M2} = relative variance of balance,
R^2_{M3} = relative variance of first volumetric flask,
R^2_{M4} = relative variance of first microsyringe,
R^2_{M5} = relative variance of second volumetric flask,
R^2_{M6} = relative variance of second microsyringe,
R^2_{M7} = relative variance of third volumetric flask, and
100 = factor to convert to percentage.

2.2. Analysis by solid phase extraction and gas chromatography of QC samples (N = 2) prepared using this procedure in 1992 gave a mean recovery of 99% ± 10% at the 1σ level. The data are published in Source Material 10.1.

3. Collection and Storage of Samples

3.1. Distilled water is used as the blank matrix for spiking. Use water that has not been run through plastic tubing or stored in plastic holding vessels because phthalates, which are semivolatile organic compounds, may leach from plastics and contaminate the samples.

3.2. Spiked QC samples are refrigerated pending analysis. The maximum holding time for herbicides in water analysis is 7 d.

4. Apparatus

4.1. Volumetric flasks: 5-, 100-, and 500-mL, class A, glass

4.2. Syringes: gas-tight, 25-, 50-, 100-, 250-, 500-, and 1000-μL.

4.3. Spatulas.

4.4. Pipettes: Pasteur, glass.

4.5. Bulbs: rubber, to fit Pasteur pipettes.

4.6. Bottles: 2-oz, amber, glass, with Teflon-lined caps.

4.7. Vials: 1.5-mL, amber, glass.

4.8. Caps: open-top to fit vials.

4.9. Septa: Teflon/silicone discs to fit open-top caps.

4.10. Teflon tape.

4.11. Bottles: 500-mL, wide-mouth, amber, glass, precleaned, with Teflon-lined lids.

4.12. Analytical balance: 200-g minimum capacity, 0.1-mg accuracy.

4.13. Drying oven: capable of sustaining 100-150°C.

4.14. Labels: printed with QC sample numbers.

5. Reagents

5.1. Methanol (analytical-grade).

6. Calibration and Standards

6.1. Prepare a stock solution of neat, standard-grade herbicides selected primarily from the list in Table I. Use Chem Service or equivalent chemicals (Chem Service, Inc., Box 3108, West Chester, PA 19387). Use the free acid form of the herbicides, not the methyl esters, since the compounds are esterified during the analytical procedure.

6.1.1. Determine the desired concentration of each analyte in the stock solution. Typical ranges for the concentrated stock solution are listed

in Table I. The concentration of an analyte in the stock solution may be varied depending on the desired spike range for the analyte in the QC sample.

TABLE I. TYPICAL CONCENTRATION RANGES FOR QC SAMPLES AND CONCENTRATED STOCK SOLUTIONS FOR VARIOUS HERBICIDES

Compound	CAS number	QC samples, μg/g	Concentrated stock, mg/mL
2,4-D	94757	0.06-1.2	0.50-1.50
Silvex	93721	0.02-0.4	0.25-0.75
2,4,5-T	93765	0.02-0.4	0.25-0.75
Dinoseb	88857	0.01-0.2	0.10-0.35

6.1.2. Add the desired amount of a solid herbicide analyte to a clean, tared, 100-mL volumetric flask. Record the mass and tare the balance. Repeat for each solid analyte.

6.1.3. Add approximately 80 mL of methanol to the flask and swirl it to dissolve all the analytes.

6.1.4. Dilute the solution to volume with methanol.

6.1.5. Mix by inversion.

6.1.6. Transfer the stock to 2-oz amber bottles with Teflon-lined lids. Cap the bottles and wrap Teflon tape around the caps.

6.1.7. Label the bottles with information identifying the standard.

6.1.8. The stock is stable for at least 3 months stored in a refrigerator.

6.2. Prepare a 1:500 dilution of the stock solution.

6.2.1. Remove the concentrated stock from the refrigerator and allow it to reach room temperature before making a dilution.

6.2.2. Add approximately 4 mL of methanol to a clean 5-mL volumetric flask.

6.2.3. Add 10 μL of the stock solution from a gas-tight syringe just above the surface of the methanol.

6.2.4. Dilute the solution to volume with methanol.

6.2.5. Mix by inversion.

6.2.6. Transfer the dilution to 1.5-mL amber vials fitted with Teflon septa and caps. Wrap Teflon tape over and around the cap.

6.2.7. Label the vials with information identifying the standards.

6.2.8. Return the concentrated stock to the refrigerator.

6.2.9. The dilution is stable for at least 3 months stored in a refrigerator.

7. Procedure

7.1. Cleaning of glassware.

7.1.1. Wash volumetric flasks with detergent and rinse them with hot tap water and methanol.

7.1.2. Store the glassware in a laboratory oven maintained at 100-150°C to minimize contamination.

7.2. Cleaning of syringes.

7.2.1. Dedicate a group of syringes for use with herbicide analytes.

7.2.2. Fill the syringe with methanol through the needle. Discard the methanol into a waste container. Repeat a total of 5-10 times.

7.2.3. Dry the syringe by pulling a vacuum on it for a minimum of 10 min.

7.3. Prepare QC samples to equal at least 10% of the total number of samples to be analyzed.

7.3.1. Remove a vial of 1:500 dilution of herbicide stock standard from the refrigerator and allow it to reach room temperature. Do not let the vial sit out at room temperature for longer than 2 h before spiking the QC sample.

7.3.2. Fill a 500-mL volumetric flask nearly to the volume mark with distilled water that has not been stored in a plastic container.

7.3.3. Using a gas-tight syringe, spike an aliquot of the 1:500 dilution beneath the surface of the water to reach the desired spike range. Blank QC samples may be made by spiking methanol instead of the stock dilution.

7.3.4. Dilute the sample to volume with distilled water. Mix by inversion.

7.3.5. Transfer the sample to a 500-mL amber glass bottle with a Teflon-lined lid.

7.3.6. Cap the bottle and label it with a QC sample number.

7.3.7. Refrigerate the sample pending analysis. The maximum holding time for a herbicides in water QC sample is 7 d.

7.3.8. Return the vial of 1:500 dilution of herbicide stock standard to the refrigerator.

7.3.9. Record QC standard information, sample number, sample description, spike amount, concentration, uncertainty, and all calculations in the QC Laboratory notebook and enter them into the CVS and CVD databases on the VAX.

8. Calculations

8.1. Calculate the concentration of each analyte in the stock solution as in the following example.

8.1.1. If 75.0 mg of 2,4-D is dissolved in 100.0 mL of methanol, the concentrations of 2,4-D in the stock solution is 0.75 mg/mL.

$$\frac{75\ \text{mg}}{100\ \text{mL}} = 0.75\ \text{mg/mL}\ .$$

8.2. Calculate the concentration of each analyte in the 1:500 dilution of the stock solution as in the following example.

8.2.1. If 10 μL of a stock solution containing 0.75 mg/mL of 2,4-D is diluted to 5 mL with methanol the concentration of 2,4-D in the 1:500 dilution is 1.5 μg/mL.

$$\frac{\left(\frac{0.75\ \text{mg}}{1\ \text{mL}}\right)\left(\frac{1\ \text{mL}}{1000\ \mu\text{L}}\right)(10\ \mu\text{L})\left(\frac{1000\ \mu\text{g}}{1\ \text{mg}}\right)}{5\ \text{mL}} = 1.5\ \mu\text{g/mL}\ .$$

8.3. Calculate the concentration of each analyte in the QC sample as in the following example.

8.3.1. If 30 μL of 1:500 stock dilution containing 1.5 μg/mL of 2,4-D is spiked into 500 mL of distilled water, the concentration of 2,4-D in the QC sample is 0.09 μg/L.

$$\frac{\left(\frac{1.5\ \mu g}{1\ mL}\right)\left(\frac{1\ mL}{1000\ \mu L}\right)(30\ \mu L)}{(500\ mL)\left(\frac{1\ L}{1000\ mL}\right)} = 0.09\ \mu g/L\ .$$

Multiply the result by RSD calculated in Step 2.1 to obtain the uncertainty.

8.4. Record analyte concentrations of the QC sample in μg/L.

9. Proper Waste Disposal Practices

9.1. Solid waste.

9.1.1. Accumulate solid waste, such as paper wipes, glass or plastic pipettes, empty vials, and incorrectly spiked QC samples contaminated with organic compounds in a covered metal can lined with a plastic bag and keep it segregated from PCB-contaminated solid waste and solid waste that is not contaminated with organic compounds.

9.1.2. Label the can with a hazardous waste label and a label indicating its use for waste contaminated with organic compounds.

9.1.3. Open the can only for the time necessary to add waste.

9.1.4. When the plastic bag is full, seal it with tape, remove it from the can, and identify it as waste contaminated with organic compounds.

9.1.5. Place a new plastic bag into the waste can for continued use.

9.1.6. Accumulate the sealed bags in a larger container lined with a plastic bag and approved for the storage and transport of waste contaminated with organic compounds.

9.1.7. Identify the sealed bag with the current Waste Profile Request Form (WPRF) number describing the waste in the sealed bag.

9.1.8. Label the larger container with a hazardous waste label and a label indicating its use for waste contaminated with organic compounds.

9.1.9. The larger container has a sealing cover. Open the can only for the time necessary to add waste to it.

9.1.10. When the plastic bag liner is full, seal it with tape and keep it in the sealed container pending pickup by the Waste Management group.

9.2. Liquid waste.

9.2.1. Accumulate liquid waste containing organic compounds, such as rinses from syringes, excess QC samples, and incorrectly spiked QC samples, in a covered metal can in a secondary containment tray.

9.2.1.1. Keep liquid waste containing organic compounds segregated from PCB-contaminated liquid waste and from waste that does not contain organic compounds.

9.2.1.2. Label the can with a hazardous waste label and a label indicating its use for waste containing organic compounds.

9.2.1.3. Open the can only for the time necessary to add waste.

9.2.1.4. When the can is full, cap it and keep it in the secondary containment trap pending pickup by the Waste Management group.

9.2.1.5. Label a new can for future use.

9.2.2. Accumulate 2-mL vials containing out-of-date spiking solutions of organic compounds in a glass jar in a secondary containment tray.

9.2.2.1. Keep solutions which are not contaminated with PCBs segregated from those which are PCB contaminated.

9.2.2.2. Label the bottle with a hazardous waste label and a label indicating its use for waste containing organic compounds.

9.2.2.3. Open the bottle only for the time necessary to add vials.

9.2.2.4. When the bottle is full, cap it and keep it in the secondary containment tray pending pickup by the Waste Management group.

9.2.2.5. Label a new bottle for future use.

9.3. Waste pickup.

9.3.1. Request pickup by the Waste Management group of a full container of waste contaminated with organic compounds using the current Chemical Waste Disposal Request (CWDR) form. The current Waste Profile Request Form (WPRF) that describes the waste is referenced on the CWDR.

9.3.2. The Waste Management group picks up the waste for disposal in accord with Laboratory policy.

10. Source Material

10.1. M. A. Gautier, N. L. Koski, E. A. Jones, and B. T. O'Malley, "Quality Assurance for Health and Environmental Chemistry: 1992," Los Alamos National Laboratory report (in preparation).

10.2. "Hazardous and Mixed Waste," Administrative Requirement 10-3, in *Environment, Safety, and Health Manual*, Los Alamos National Laboratory Manual, Chapter 1 (most recent edition).

PESTICIDES ON SOIL — QC SAMPLE PREPARATION

Analyte: Pesticides	**Method No.:** QCO140
Matrix: Soil	**Spike Range:** 10-150 μg/kg
Procedure: Analysis by solvent extraction followed by gas chromatography with electron capture detection (GCECD)	**Accuracy and Precision:** 100% ± 4.4%
Effective Date: 01/22/90	**Authors:** Nancy L. Koski Margaret A. Gautier

SAFETY NOTE: Before beginning this procedure, read all of the Material Safety Data Sheets for the chemicals listed in Sec. 5. Read Sec. 4.3 of the EM-9 Safety Manual for information on personal protective clothing and equipment. Read Sec. 9 of this procedure and Source Material 10.4 for proper waste disposal practices.

1. Principle of Method

1.1. Prepare a stock solution in acetone of one to six individual pesticides, selected primarily from the list in Section 6, Table I.

1.2. Prepare a 1:1000 dilution in methanol of the stock solution.

1.3. Spike the 1:1000 dilution directly onto blank soil.

2. Accuracy and Precision

2.1. The propagated error on QC preparation is based on the error of the standard and on the error associated with use of the microsyringe, volumetric flask, and balance. A relative standard deviation (RSD) of 4.4% at the 1σ level has been calculated for the error of the standard and for the spiking and weighing process based on the following function:

$$D = \frac{M1 \times M2 \times M4 \times M6}{M3 \times M5 \times M7},$$

where D = calculated result,
M1 = standard error,
M2 = first weighing error,
M3 = first dilution error,
M4 = first spiking error,

M5 = second dilution error,
M6 = second spiking error, and
M7 = second weighing error.

2.1.1. Calculate relative variance using the following equation.

$$R_M^2 = \frac{\sigma^2}{\overline{X}^2} ,$$

where R^2_M = relative variance,
M = $M_1 \ldots M_n$ (variable),
σ^2 = variance (std dev^2), and
$\overline{X}$ = mean value of each variable (M).

2.1.2. Calculate percent relative standard deviation using the following equation.

$$S_{D_T} = \sqrt{R^2_{M1} + R^2_{M2} + R^2_{M3} + R^2_{M4} + R^2_{M5} + R^2_{M6} + R^2_{M7}} \times 100 ,$$

where SD_T = relative standard deviation (% error),
R^2_{M1} = relative variance of standard,
R^2_{M2} = relative variance of first balance,
R^2_{M3} = relative variance of first volumetric flask,
R^2_{M4} = relative variance of first microsyringe,
R^2_{M5} = relative variance of second volumetric flask,
R^2_{M6} = relative variance of second microsyringe,
R^2_{M7} = relative variance of second balance, and
100 = factor to convert to percentage.

2.2. Analysis by solvent extraction and gas chromatography of QC samples prepared using this procedure from 1990 to 1992 are summarized and tabulated below. The data are published in Source Materials 10.1 through 10.3.

PESTICIDES ON SOIL SPIKE RECOVERY DATA		
Compound	% Recovery Mean ± SD	(N)
Lindane	71 ± 25	(6)
α-BHC	69 ± 18	(5)
Aldrin	—	
β-BHC	75 ± 18	(2)
δ-BHC	—	
Dieldrin	—	
Endosulfan I	—	
Endosulfan II	—	
Endrin	78 ± 22	(8)
Heptachlor epoxide	74 ± 16	(5)
p,p′-DDD	63 ± 24	(7)
p,p′-DDE	78 ± 15	(3)
p,p′-DDT	70 ± 36	(8)
Methoxychlor	63 ± 15	(6)
Endosulfan sulfate	—	

3. Collection and Storage of Samples

3.1. The blank soil matrix and the spiked samples should be stored in glass bottles fitted with Teflon-lined lids. Avoid using plastic containers and lids because phthalates, which are semivolatile compounds, may leach from plastics and contaminate the sample.

3.2. Spiked QC samples are refrigerated pending analysis. The maximum holding time for the extraction of pesticides on soil is 14 d.

4. Apparatus

4.1. Volumetric flasks: 10- and 50-mL, class A, glass.

4.2. Syringes: gas-tight, 50-, 100-, and 250-μL.

4.3. Spatulas.

4.4. Pipettes: Pasteur, glass.

4.5. Bulbs: rubber, to fit Pasteur pipettes.

4.6. Bottles: 2-oz, amber, glass, with Teflon-lined caps.

4.7. Teflon tape.

4.8. Bottles: 2-oz, glass, with Teflon-lined caps.

4.9. Analytical balance: 200-g minimum capacity, 0.1-mg accuracy.

4.10. Drying oven: capable of sustaining 100-150°C.

4.11. Labels: printed with QC sample numbers.

5. Reagents

5.1. Soil: a clean, dry 10-g aliquot is required for each sample.

5.2. A suitable soil does not contain the analyte of interest and presents few interferences to the analytical method.

5.3. Blank soil heated to nominally 100°C for 5 h and stored in glass is used as a sample matrix.

5.4. Acetone (analytical-grade).

5.5. Methanol (analytical-grade).

6. Calibration and Standards

6.1. Prepare a stock solution of neat, standard-grade pesticides selected primarily from the list in Table I. Use Chem Service or equivalent chemicals (Chem Service, Inc., Box 3108, West Chester, PA 19387).

6.1.1. Determine the desired concentration of each analyte included in the stock solution. Typical ranges for the concentrated stock solution are listed in Table I. The concentration of an analyte in the stock solution may be varied depending on the desired spike range for the analyte in the QC sample.

TABLE I. TYPICAL CONCENTRATON RANGES FOR QC SAMPLES AND CONCENTRATED STOCK SOLUTIONS FOR VARIOUS PESTICIDES

Compound	CAS numbers	QC Samples µg/L	Concentrated stock mg/mL
Lindane	58899	10-20	1-2
α-BHC	319846	10-20	1-2
Aldrin	309002	20-40	2-4
β-BHC	319857	20-40	2-4
δ-BHC	319868	20-40	2-4
Dieldrin	60571	20-40	2-4
Endosulfan I	959988	20-40	2-4
Endosulfan II	33213659	20-40	2-4
Endrin	72208	20-40	2-4
Heptachlor epoxide	1024573	20-40	2-4
p,p′-DDD	72548	20-40	2-4
p,p′-DDE	72559	20-40	2-4
p,p′-DDT	50293	20-40	2-4
Methoxychlor	72435	50-150	5-15
Endosulfan sulfate	1031078	50-150	5-15

6.1.2. Add the desired amount of a solid pesticide analyte to a clean, tared 10.0-mL volumetric flask. Record the mass and tare the balance. Repeat for each solid analyte.

6.1.3. Add approximately 7 mL of acetone to the flask and swirl to dissolve the analytes.

6.1.4. Dilute the solution to volume with acetone.

6.1.5. Mix by inversion.

6.1.6. Transfer the stock solution to a 2-oz amber bottle with a Teflon-lined lid. Cap the bottle.

6.1.7. Label the bottle with information identifying the standard.

6.1.8. Weigh the capped and labeled bottle containing the standard and record the mass and date on the label.

6.1.9. Wrap Teflon tape around the cap.

6.1.10. The stock solution is stable for at least 3 months stored at room temperature. Refrigeration may cause some of the analytes to precipitate.

6.1.11. Before each use, remove the Teflon tape from the bottle, weigh the bottle, and compare the mass to the most recent mass recorded on the bottle label. Any significant loss in mass is attributed to evaporation of the acetone matrix. Make up the loss by adding enough acetone to reach the most recent mass recorded on the label, restoring the stock solution to its original concentration.

6.2. Prepare a 1:1000 dilution of the stock solution.

6.2.1. Remove the Teflon tape from the bottle of pesticide stock solution, weigh the bottle and, if necessary, adjust the concentration of the stock by adding acetone as described in Step 6.1.11.

6.2.2. Add approximately 40 mL of methanol to a clean 50-mL volumetric flask.

6.2.3. Add 50 μL of the pesticide stock solution from a gas-tight syringe just above the surface of the methanol.

6.2.4. Cap the bottle of pesticide stock solution and weigh the capped bottle.

6.2.5. Record the date and the mass of the capped bottle of solution on the bottle label and cross out the previous date and mass.

6.2.6. Wrap Teflon tape around the bottle cap.

6.2.7. Dilute the solution in the 50-mL volumetric flask to volume with methanol.

6.2.8. Mix by inversion.

6.2.9. Transfer the 1:1000 dilution to a 2-oz amber bottle with a Teflon-lined lid. Cap the bottle.

6.2.10. Label the bottle with information identifying the dilution.

6.2.11. Weigh the capped and labeled bottle containing the dilution and record the mass and date on the label.

6.2.12. Wrap Teflon tape around the cap.

6.2.13. The diluted stock solution is stable for at least 3 months stored at room temperature. Refrigeration may cause some of the analytes to precipitate.

6.2.14. Before each use, remove the Teflon tape from the bottle, weigh the bottle, and compare the mass to the most recent mass recorded on the bottle label. Any significant loss in mass is attributed to evaporation of the methanol matrix. Make up the loss by adding enough methanol to reach the most recent mass recorded on the label, restoring the dilution to its original concentration.

7. Procedure

7.1. Cleaning of glassware.

7.1.1. Wash volumetric flasks with detergent and rinse them with hot tap water and methanol.

7.1.2. Store the glassware in a laboratory oven maintained at 100-150°C to minimize contamination.

7.2. Cleaning of syringes.

7.2.1. Dedicate a group of syringes for use with pesticide analytes.

7.2.2. Fill the syringe with methanol through the needle. Discard the methanol into a waste container. Repeat a total of 5-10 times.

7.2.3. Dry the syringe by pulling a vacuum on it for a minimum of 10 min.

7.3. Preparation of QC samples.

7.3.1. Prepare QC samples to equal at least 10% of the total number of samples to be analyzed.

7.3.2. This procedure describes the preparation of a pesticides on soil QC sample using 10 g of blank soil. A different size soil sample may be used, adjusting the spike volume of pesticide stock to reach the desired spike range.

7.3.3. Accurately weigh 10 g of blank soil into a 2-oz glass bottle with a Teflon-lined lid. Record the mass of soil on the bottle with a felt-tipped pen for reference by the analyst.

7.3.4. Remove the Teflon tape from the bottle containing the 1:1000 dilution of the pesticide stock.

7.3.5. Weigh the bottle and compare the mass to the most recent mass recorded on the label.

7.3.6. If a significant loss in mass has occurred due to evaporation of the methanol matrix, add enough methanol to the dilution to reach the most recent mass recorded on the label, restoring the solution to its original concentration as described in Step 6.2.14.

7.3.7. If methanol has been added, mix the solution by swirling the bottle.

7.3.8. Using a gas-tight syringe, spike a volume of the 1:1000 dilution onto the surface of the soil to reach the desired spike range. Cap the bottle containing the dilution. Blank samples may be made by spiking methanol onto the soil. The analyst will use the entire sample.

7.3.9. Cap the vial containing the spiked soil sample and label it with a QC number.

7.3.10. Refrigerate the sample pending analysis. The maximum holding time for a pesticides on soil QC sample is 14 d.

7.3.11. Weigh the capped bottle containing the 1:1000 stock dilution. Record the date and the new mass on the label on the bottle and cross out the previous date and mass.

7.3.12. Wrap Teflon tape around the cap and store the solution at room temperature.

7.4. Record QC standard information, sample number, sample description, spike amount, concentration, uncertainty, and all calculations in the QC Laboratory notebook and enter them into the CVS and CVD databases on the VAX.

8. Calculations

8.1. Calculate the concentration of each analyte in the stock solution as in the following example.

8.1.1. If 18.0 mg of Lindane is dissolved in 10.0 mL of acetone, the concentration of Lindane in the stock solution is 1.8 mg/mL.

$$\frac{18.0 \text{ mg}}{10.0 \text{ mL}} = 1.8 \text{ mg/mL} .$$

8.2. Calculate the concentration of each analyte in the 1:1000 dilution of the stock solution as in the following example.

8.2.1. If 50 μL of a stock solution containing 1.8 mg/mL of Lindane is diluted to 50 mL with methanol, the concentration of Lindane in the 1:1000 dilution is 1.8 μg/mL.

$$\frac{\left(\frac{1.8\ \text{mg}}{1\ \text{mL}}\right)\left(\frac{1\ \text{mL}}{1000\ \mu\text{L}}\right)(50\ \mu\text{L})\left(\frac{1000\mu\text{g}}{1\ \text{mg}}\right)}{50\ \text{mL}} = 1.8\ \mu\text{g/mL}\ .$$

8.3. Calculate the concentration of each analyte in the QC sample as in the following example.

8.3.1. If 90 μL of a 1:1000 stock dilution containing 1.8 μg/mL Lindane is spiked onto 10.0000 g of blank soil, the concentration of Lindane in the QC sample is 16 μg/kg.

$$\frac{\left(\frac{1.8\mu\text{g}}{1\ \text{mL}}\right)\left(\frac{1\ \text{mL}}{1000\mu\text{L}}\right)(90\ \mu\text{L})}{10.0000\ \text{g}\ \left(\frac{1\ \text{kg}}{1000\ \text{g}}\right)} = 16\ \mu\text{g/kg}\ .$$

Multiply the result by the RSD calculated in Step 2.1 to obtain the uncertainty.

8.4. Record analyte concentrations in the QC sample in μg/kg or μg/g.

9. Proper Waste Disposal Practices

9.1. Solid waste.

9.1.1. Accumulate solid waste, such as paper wipes, glass or plastic pipettes, empty vials, and incorrectly spiked QC samples contaminated with organic compounds in a covered metal can lined with a plastic bag and keep it segregated from PCB-contaminated solid waste and solid waste that is not contaminated with organic compounds.

9.1.2. Label the can with a hazardous waste label and a label indicating its use for waste contaminated with organic compounds.

9.1.3. Open the can only for the time necessary to add waste.

9.1.4. When the plastic bag is full, seal it with tape, remove it from the can, and identify it as waste contaminated with organic compounds.

9.1.5. Place a new plastic bag into the waste can for continued use.

9.1.6. Accumulate the sealed bags in a larger container lined with a plastic bag and approved for the storage and transport of waste contaminated with organic compounds.

9.1.7. Identify the sealed bag with the current Waste Profile Request Form (WPRF) number describing the waste in the sealed bag.

9.1.8. Label the larger container with a hazardous waste label and a label indicating its use for waste contaminated with organic compounds.

9.1.9. The larger container has a sealing cover. Open the can only for the time necessary to add waste.

9.1.10. When the plastic bag liner is full, seal it with tape and keep it in the sealed container pending pickup by the Waste Management group.

9.2. Liquid waste.

9.2.1. Accumulate liquid waste containing organic compounds, such as rinses from syringes, excess QC samples, and incorrectly spiked QC samples, in a covered metal can in a secondary containment tray.

9.2.1.1. Keep liquid waste containing organic compounds segregated from PCB-contaminated liquid waste and from waste that does not contain organic compounds.

9.2.1.2. Label the can with a hazardous waste label and a label indicating its use for waste containing organic compounds.

9.2.1.3. Open the can only for the period of time necessary to add waste.

9.2.1.4. When the can is full, cap it and keep it in the secondary containment tray pending pickup by the Waste Management group.

9.2.1.5. Label a new can for future use.

9.2.2. Accumulate 2-mL vials containing out-of-date spiking solutions of organic compounds in a glass jar in a secondary containment tray.

9.2.2.1. Keep solutions which are not contaminated with PCBs segregated from those which are PCB contaminated.

9.2.2.2. Label the bottle with a hazardous waste label and a label indicating its use for waste containing organic compounds.

9.2.2.3. Open the bottle only for the time necessary to add vials.

9.2.2.4. When the bottle is full, cap it and keep it in the secondary containment tray pending pickup by the Waste Management group.

9.2.2.5. Label a new bottle for future use.

9.3. Waste pickup.

9.3.1. Request pickup by the Waste Management group of a full container of waste contaminated with organic compounds using the current Chemical Waste Disposal Request (CWDR) form. The current Waste Profile Request Form (WPRF) that describes the waste is referenced on the CWDR.

9.3.2. The Waste Management group picks up the waste for disposal in accord with Laboratory policy.

10. Source Materials

10.1. M. A. Gautier, E. S. Gladney, N. L. Koski, M. B. Phillips, E. A. Jones, And B. T. O'Malley, "Quality Assurance for Health and Environmental Chemistry: 1989," Los Alamos National Laboratory report LA-11995-MS (1990).

10.2. M. A. Gautier, E. S. Gladney, N. L. Koski, E. A. Jones, and B. T. O'Malley, "Quality Assurance for Health and Environmental Chemistry: 1990," Los Alamos National Laboratory report LA-12208-MS (1991).

10.3. M. A. Gautier, E. S. Gladney, N. L. Koski, E. A. Jones, and B. T. O'Malley, "Quality Assurance for Health and Environmental Chemistry: 1991," Los Alamos National Laboratory report LA-12436-MS (1992).

10.4. "Hazardous and Mixed Waste," Administrative Requirement 10-3, in *Environment, Safety, and Health Manual*, Los Alamos National Laboratory Manual, Chapter 1 (most recent edition).

PESTICIDES IN WATER — QC SAMPLE PREPARATION

Analyte: Pesticides	**Method No.:** QCO150
Matrix: Water	**Spike Range:** 0.1-1.5 μg/L
Procedure: Analysis by solid phase extraction followed by gas chromatography with electron capture detection (GCECD)	**Accuracy and Precision:** 100% ± 4.4%
Effective Date: 03/01/90	**Author:** Nancy L. Koski Margaret A. Gautier

SAFETY NOTE: Before beginning this procedure, read all of the Material Safety Data Sheets for the chemicals listed in Sec. 5. Read Sec. 4.3 of the EM-9 Safety Manual for information on personal protective clothing and equipment. Read Sec. 9 of this procedure and Source Material 10.3 for proper waste disposal practices.

1. Principle of Method

1.1. Prepare a stock solution in acetone of one to six individual pesticides selected primarily from the list in Section 6, Table I.

1.2. Prepare a 1:1000 dilution in methanol of the stock solution.

1.3. Spike the 1:1000 dilution directly into distilled water.

2. Accuracy and Precision

2.1. The propagated error on QC preparation is based on the error of the standard and on the error associated with use of the microsyringe, balance, and volumetric flask. A relative standard deviation (RSD) of 4.4% at the 1σ level has been calculated for standard preparation and for the weighing, spiking, and dilution process based on the following function:

$$D = \frac{M1 \times M2 \times M4 \times M6}{M3 \times M5 \times M7},$$

where D = calculated result,
M1 = standard error,
M2 = weighing error,
M3 = first dilution error,
M4 = first pipette error,

M5 = second dilution error,
M6 = second pipette error, and
M7 = third dilution error.

2.1.1. Calculate relative variance for each variable using the following equation.

$$R_M^2 = \frac{\sigma^2}{\overline{X}^2} ,$$

where R^2_M = relative variance,
M = $M_1 \ldots M_n$ (variable),
σ^2 = variance (std dev^2), and
$\overline{X}$ = mean value of each variable (M).

2.1.2. Calculate percent relative standard deviation using the following equation.

$$S_{D_T} = \sqrt{R^2_{M1} + R^2_{M2} + R^2_{M3} + R^2_{M4} + R^2_{M5} + R^2_{M6} + R^2_{M7}} \times 100 ,$$

where SD_T = relative standard deviation (% error),
R^2_{M1} = relative variance of standard,
R^2_{M2} = relative variance of balance,
R^2_{M3} = relative variance of first volumetric flask,
R^2_{M4} = relative variance of first microsyringe,
R^2_{M5} = relative variance of second volumetric flask,
R^2_{M6} = relative variance of second microsyringe,
R^2_{M7} = relative variance of third volumetric flask, and
100 = factor to convert to percentage.

2.2. Analysis by solid phase extraction and gas chromatography of QC samples (N = 3) prepared using this procedure from 1990 through 1992 gave a mean recovery of 68% ± 21% at the 1σ level. The data are published in Source Materials 10.1 and 10.2.

3. Collection and Storage of Samples

3.1. Distilled water is used as the blank matrix for spiking. Use water that has not been run through plastic tubing or stored in plastic holding vessels because phthalates, which are semivolatile organic compounds, may leach from plastics and contaminate the samples.

3.2. Spiked QC samples are refrigerated pending analysis. The maximum holding time for pesticides in water is 7 d.

4. Apparatus

4.1. Volumetric flasks: 10-, 50-, and 500-mL, class A, glass.

4.2. Syringes: gas-tight, 25-, 50-, 100-, and 250-μL.

4.3. Spatulas.

4.4. Pipettes: Pasteur, glass.

4.5. Bulbs: rubber, to fit Pasteur pipettes.

4.6. Bottles: 2-oz , amber, glass, with Teflon-lined caps.

4.7. Teflon tape.

4.8. Bottles: 500-mL, wide-mouth, amber glass, precleaned, with Teflon-lined lids.

4.9. Analytical balance: 200-g minimum capacity, 0.1-mg accuracy.

4.10. Drying oven: capable of sustaining 100-150°C.

4.11. Labels: printed with QC sample numbers.

5. Reagents

5.1. Acetone (analytical-grade).

5.2. Methanol (analytical-grade).

6. Calibration and Standards

6.1. Prepare a stock solution of neat, standard-grade pesticides selected primarily from the list in Table I. Use Chem Service or equivalent chemicals (Chem Service, Inc., Box 3108, West Chester, PA 19387).

6.1.1. Determine the desired concentration of each analyte in the stock solution. Typical ranges for the concentrated stock solution are listed in Table I. The concentration of an analyte in the stock solution may be varied depending on the desired spike range for the analyte in the QC sample.

TABLE I. TYPICAL CONCENTRATION RANGES FOR QC SAMPLES AND CONCENTRATED STOCK SOLUTIONS FOR VARIOUS PESTICIDES

Compounds	CAS numbers	QC samples, μg/L	Concentrated stock, mg/mL
Lindane	58899	0.1-0.2	1-2
α-BHC	319846	0.1-0.2	1-2
Aldrin	309002	0.2-0.4	2-4
β-BHC	319857	0.2-0.4	2-4
δ-BHC	319868	0.2-0.4	2-4
Dieldrin	60571	0.2-0.4	2-4
Endosulfan I	959988	0.2-0.4	2-4
Endosulfan II	33213659	0.2-0.4	2-4
Endrin	72208	0.2-0.4	2-4
Heptachlor epoxide	1024573	0.2-0.4	2-4
p,p′-DDD	72548	0.2-0.4	2-4
p,p′-DDE	72559	0.2-0.4	2-4
p,p′-DDT	50293	0.2-0.4	2-4
Methoxychlor	72435	0.5-1.5	5-15
Endosulfan sulfate	1031078	0.5-1.5	5-15

6.1.2. Add the desired amount of a solid pesticide analyte to a clean, tared 10.0-mL volumetric flask. Record the mass and tare the balance. Repeat for each solid analyte.

6.1.3. Add approximately 7 mL of acetone to the flask and swirl it to dissolve all the analytes.

6.1.4. Dilute the solution to volume with acetone.

6.1.5. Mix by inversion.

6.1.6. Transfer the stock to a 2-oz amber bottle with a Teflon-lined lid. Cap the bottle.

6.1.7. Label the bottle with information identifying the standard.

6.1.8. Weigh the capped and labeled bottle containing the standard and record the mass and date on the label.

6.1.9. Wrap Teflon tape around the cap.

6.1.10. The stock solution is stable for at least 3 months stored at room temperature. Refrigeration may cause some of the analytes to precipitate.

6.1.11. Before each use, remove the Teflon tape from the bottle, weigh the bottle, and compare the mass to the most recent mass recorded on the bottle label. Any significant loss in mass is attributed to evaporation of the acetone matrix. Make up the loss by adding enough acetone to reach the most recent mass recorded on the label, restoring the stock solution to its original concentration.

6.2. Prepare a 1:1000 dilution of the stock solution.

6.2.1. Remove the Teflon tape from the bottle of pesticide stock solution, weigh the bottle, and, if necessary, adjust the concentration of the stock by adding acetone as described in Step 6.1.11.

6.2.2. Add approximately 40 mL of methanol to a clean 50-mL volumetric flask.

6.2.3. Add 50 μL of the pesticide stock solution from a gas-tight syringe just above the surface of the methanol.

6.2.4. Cap the bottle of pesticide stock solution and weigh the capped bottle.

6.2.5. Record the date and the mass of the capped bottle of solution on the bottle label and cross out the previous date and mass.

6.2.6. Wrap Teflon tape around the bottle cap.

6.2.7. Dilute the solution in the 50-mL volumetric flask to volume with methanol.

6.2.8. Mix by inversion.

6.2.9. Transfer the 1:1000 dilution to a 2-oz amber bottle with a Teflon-lined lid. Cap the bottle.

6.2.10. Label the bottle with information identifying the dilution.

6.2.11. Weigh the capped and labeled bottle containing the dilution and record the mass and date on the label.

6.2.12. Wrap Teflon tape around the cap.

6.2.13. The diluted stock solution is stable for at least 3 months stored at room temperature. Refrigeration may cause some of the analytes to precipitate.

6.2.14. Before each use, remove the Teflon tape from the bottle, weigh the bottle, and compare the mass to the most recent mass recorded on the bottle label. Any significant loss in mass is attributed to evaporation of the methanol matrix. Make up the loss by adding enough methanol to reach the most recent mass recorded on the label, restoring the dilution to its original concentration.

7. Procedure

7.1. Cleaning of glassware.

7.1.1. Wash volumetric flasks with detergent and rinse them with hot tap water and methanol.

7.1.2. Store the glassware in a laboratory oven maintained at 100-150°C to minimize contamination.

7.2. Cleaning of syringes.

7.2.1. Dedicate a group of syringes for use with pesticide analytes.

7.2.2. Fill the syringe with methanol through the needle. Discard the methanol into a waste container. Repeat a total of 5-10 times.

7.2.3. Dry the syringe by pulling a vacuum on it for a minimum of 10 min.

7.3. Preparation of QC samples.

7.3.1. Prepare QC samples to equal at least 10% of the total number of samples to be analyzed.

7.3.2. Fill a 500-mL volumetric flask nearly to the volume mark with distilled water that has not been stored in a plastic container.

7.3.3. Remove the Teflon tape from the bottle containing the 1:1000 dilution of the pesticide stock.

7.3.4. Weigh the dilution and compare the mass to the most recent mass recorded on the bottle label.

7.3.5. If a significant loss in mass has occurred due to evaporation of the methanol matrix, add enough methanol to the dilution to reach the most

recent mass recorded on the label, restoring the dilution to its original concentration as described in Step 6.2.14.

7.3.6. If methanol has been added, mix the solution by swirling the bottle.

7.3.7. Using a gas-tight syring, spike a volume of the 1:1000 dilution beneath the surface of the water to reach the desired spike range. Cap the bottle containing the dilution. Blank QC samples may be made by spiking methanol instead of stock dilution.

7.3.8. Dilute the sample to volume with distilled water. Mix by inversion.

7.3.9. Transfer the sample to a 500-mL amber glass bottle with a Teflon-lined lid.

7.3.10. Cap the bottle and label it with a QC sample number.

7.3.11. Refrigerate the sample pending analysis. The maximum holding time for a pesticides in water QC sample is 7 d.

7.3.12. Weigh the capped bottle containing the 1:1000 stock dilution. Record the date and the new mass on the label on the bottle and cross out the previous date and mass.

7.3.13. Wrap Teflon tape around the cap and store the dilution at room temperature.

7.4. Record QC standard information, sample number, sample description, spike amount, concentration, uncertainty, and all calculations in the QC Laboratory notebook and enter them into the CVS and CVD databases on the VAX.

8. Calculations

8.1. Calculate the concentration of each analyte in the stock solution as in the following example.

8.1.1. If 18.0 mg of Lindane is dissolved in 10.0 mL of acetone, the concentration of Lindane in the stock solution is 1.8 mg/mL.

$$\frac{18.0 \text{ mg}}{10.0 \text{ mL}} = 1.8 \text{ mg/mL} .$$

8.2. Calculate the concentration of each analyte in the 1:1000 dilution of the stock solution as in the following example.

8.2.1. If 50 μL of a stock solution containing 1.8 mg/mL of Lindane is diluted to 50 mL with methanol, the concentration of Lindane in the 1:1000 dilution is 1.8 μg/mL.

$$\frac{\left(\frac{1.8\ \text{mg}}{1\ \text{mL}}\right)\left(\frac{1\ \text{mL}}{1000\ \mu\text{L}}\right)(50\ \mu\text{L})\left(\frac{1000\ \mu\text{g}}{1\ \text{mg}}\right)}{50\ \text{mL}} = 1.8\ \mu\text{g/mL}\ .$$

8.3. Calculate the concentration of each analyte in the QC sample as in the following example.

8.3.1. If 40 μL of a 1:1000 stock dilution containing 1.8 μg/mL Lindane is spiked into 500 mL of distilled water, the concentration of Lindane in the QC sample is 0.14 μg/L.

$$\frac{\left(\frac{1.8\ \mu\text{g}}{1\ \text{mL}}\right)\left(\frac{1\ \text{mL}}{1000\ \mu\text{L}}\right)(40\ \mu\text{L})}{(500\ \text{mL})\left(\frac{1\ \text{L}}{1000\ \text{mL}}\right)} = 0.14\ \mu\text{g/L}\ .$$

Multiply the result by the RSD calculated in Step 2.1 to obtain the uncertainty.

8.4. Record analyte concentrations in the QC sample in μg/L.

9. Proper Waste Disposal Practices

9.1. Solid waste.

9.1.1. Accumulate solid waste, such as paper wipes, glass or plastic pipettes, empty vials, and incorrectly spiked QC samples contaminated with organic compounds in a covered metal can lined with a plastic bag and keep it segregated from PCB-contaminated solid waste and solid waste that is not contaminated with organic compounds.

9.1.2. Label the can with a hazardous waste label and a label indicating its use for waste contaminated with organic compounds.

9.1.3. Open the can only for the time necessary to add waste.

9.1.4. When the plastic bag is full, seal it with tape, remove it from the can, and identify it as waste contaminated with organic compounds.

9.1.5. Place a new plastic bag into the waste can for continued use.

9.1.6. Accumulate the sealed bags in a larger container lined with a plastic bag and approved for the storage and transport of waste contaminated with organic compounds.

9.1.7. Identify the sealed bag with the current Waste Profile Request Form (WPRF) number describing the waste in the sealed bag.

9.1.8. Label the larger container with a hazardous waste label and a label indicating its use for waste contaminated with organic compounds.

9.1.9. The larger container has a sealing cover. Open the can only for the time necessary to add waste.

9.1.10. When the plastic bag liner is full, seal it with tape and keep it in the sealed container pending pickup by the Waste Management group.

9.2. Liquid waste.

9.2.1. Accumulate liquid waste containing organic compounds, such as rinses from syringes, excess QC samples, and incorrectly spiked QC samples, in a covered metal can in a secondary containment tray.

9.2.1.1. Keep liquid waste containing organic compounds segregated from PCB-contaminated liquid waste and from waste that does not contain organic compounds.

9.2.1.2. Label the can with a hazardous waste label and a label indicating its use for waste containing organic compounds.

9.2.1.3. Open the can only for the time necessary to add waste.

9.2.1.4. When the can is full, cap it and keep it in the secondary containment tray pending pickup by the Waste Management group.

9.2.1.5. Label a new can for future use.

9.2.2. Accumulate 2-mL vials containing out-of-date spiking solutions of organic compounds in a glass jar in a secondary containment tray.

9.2.2.1. Keep solutions which are not contaminated with PCBs segregated from those which are PCB contaminated.

9.2.2.2. Label the bottle with a hazardous waste label and a label indicating its use for waste containing organic compounds.

9.2.2.3. Open the bottle only for the time necessary to add vials.

9.2.2.4. When the bottle is full, cap it and keep it in the secondary containment tray pending pickup by the Waste Management group.

9.2.2.5. Label a new bottle for future use.

9.3. Waste pickup.

9.3.1. Request pickup by the Waste Management group of a full container of waste contaminated with organic compounds using the current Chemical Waste Disposal Request (CWDR) form. The current Waste Profile Request Form (WPRF) that describes the waste is referenced on the CWDR.

9.3.2. The Waste Management group picks up the waste for disposal in accord with Laboratory policy.

10. Source Materials

10.1. M. A. Gautier, E. S. Gladney, N. L. Koski, E. A. Jones, and B. T. O'Malley, "Quality Assurance for Health and Environmental Chemistry: 1990," Los Alamos National Laboratory report LA-12208-MS (1991).

10.2. M. A. Gautier, E. S. Gladney, N. L. Koski, E. A. Jones, and B. T. O'Malley, "Quality Assurance and Health for Environmental Chemistry: 1991," Los Alamos National Laboratory report LA-12436-MS (1992).

10.3. "Hazardous and Mixed Waste," Administrative Requirement 10-3, in *Environment, Safety, and Health Manual*, Los Alamos National Laboratory Manual, Chapter 1 (most recent edition).

POLYCHLORINATED BIPHENYLS IN OIL — QC SAMPLE PREPARATION

Analyte: Polychlorinated biphenyls (PCBs)	**Method No.:** QCO170
Matrix: Oil	**Spike Range:** 10-500 μg/g oil
Procedure: Analysis by gas chromatography with electron-capture detection (GCECD)	**Accuracy and Precision:** EPA standards - 100% ± 10.0% EM-9 standards - 100% ± 1.5%
Effective Date: 09/15/86	**Authors:** Nancy L. Koski Margaret A. Gautier

SAFETY NOTE: Before beginning this procedure, read all of the Material Safety Data Sheets for the chemicals listed in Sec. 5. Read Sec. 4.3 of the EM-9 Safety Manual for information on personal protective clothing and equipment. Read Sec. 9 of this procedure and Source Materials 10.4 to 10.5 for proper waste disposal practices.

1. Principle of Method

1.1. Prepare stock solutions of Aroclor 1242, 1254, and 1260 in hexane, or obtain Environmental Protection Agency (EPA) Aroclor 1242, 1254, and 1260 standards. Refer to Table I for Aroclors and associated CAS numbers.

TABLE I

Compound	CAS Number
Aroclor 1242	53469219
Aroclor 1254	11097691
Aroclor 1260	11096825
Total PCBs	1336363

1.2. Spike the stock solution into a blank oil sample.

2. Accuracy and Precision

2.1. The propagated error on QC preparation is based on the error of the standard and on the error associated with the use of the microsyringe and of the balance. A relative standard deviation (RSD) of 10% for EPA standards and 1.5% for in-house standards has been calculated for the error of the standard and for spiking and weighing based on the following:

2.1.1. EPA standard.

$$D = \frac{M1 \times M2}{M3} ,$$

where D = calculated result,
M1 = standard error,
M2 = spiking error, and
M3 = weighing error.

2.1.1.1. Calculate relative variance using the following equation.

$$R_M^2 = \frac{\sigma^2}{\overline{X}^2} ,$$

where R^2_M = relative variance,
M = $M_1 \ldots M_n$ (variable),
σ^2 = variance (std dev^2), and
$\overline{X}$ = mean value of each variable (M).

2.1.1.2. Calculate percent relative standard deviation using the following equation.

$$SD_T = \sqrt{R_{M1}^2 + R_{M2}^2 + R_{M3}^2} \times 100 ,$$

where SD_T = relative standard deviation (% error),
R^2_{M1} = relative variance of standard,
R^2_{M2} = relative variance of microsyringe,
R^2_{M3} = relative variance of balance, and
100 = factor to convert to percentage.

2.1.2. In-house standard.

$$U = \frac{M1 \times M2 \times M4}{M3 \times M5} ,$$

where U = uncertainty,
M1 = standard error,
M2 = weighing error,

M3 = dilution error,
M4 = second weighing error, and
M5 = spiking error.

2.1.2.1. Calculate relative variance using the following equation.

$$R_M^2 = \frac{\sigma^2}{\overline{X}^2} ,$$

where R^2_M = relative variance,
M = $M_1 \ldots M_n$ (variable),
σ^2 = variance (std dev^2), and
$\overline{X}$ = mean value of each variable.

2.1.2.2. Calculate percent relative standard deviation using the following equation.

$$S_{D_T} = \sqrt{R_{M1}^2 + R_{M2}^2 + R_{M3}^2 + R_{M4}^2 + R_{M5}^2} \times 100 ,$$

where SD_T = relative standard deviation (% error),
R^2_{M1} = relative variance of standard,
R^2_{M2} = relative variance of balance,
R^2_{M3} = relative variance of volumetric flask,
R^2_{M4} = relative variance of second balance,
R^2_{M5} = relative variance of microsyringe, and
100 = factor to convert to percentage.

2.2. Analytical results from QC samples prepared between 1990 and 1992 using this procedure and analyzed by gas chromatography with electron-capture detection are tabulated below. The data are published in Source Materials 10.1 to 10.3.

PCB IN OIL SPIKE RECOVERY DATA (% recovery ± std dev)

	1990			1991			1992		
	Mean	± SD	N	Mean	± SD	N	Mean	± SD	N
Aroclor 1242	96	± 19	(56)	112	± 20	(49)	121	± 38	(60)
Aroclor 1254		—			—		103	± 43	(10)
Aroclor 1260	79	± 14	(88)	96	± 23	(78)	87	± 31	(80)
Total Aroclor	86	± 18	(143)	102	± 23	(127)	102	± 38	(150)

3. Collection and Storage of Samples

3.1. Spiked QC samples are stored at room temperature pending analysis. Samples prepared in 1986 and analyzed through 1991 have shown no decrease in analyte recovery.

4. Apparatus

4.1. Volumetric flasks: 5-mL, class A, glass.

4.2. Gas-tight syringes: 50-, 250-, 500-, and 2500-μL.

4.3. Bottles: 2- and 8-oz, glass with Teflon-lined lids.

4.4. Vials: 1.5-mL glass.

4.5. Caps: open-top to fit 1.5-mL vials.

4.6. Septa: Teflon/silicone discs to fit open-top caps.

4.7. Teflon tape.

4.8. Pipettes: Pasteur, disposable glass.

4.9. Pipette bulb: rubber, to fit Pasteur pipette.

4.10. Stirring rod: glass, 3- to 4-mm diameter.

4.11. Autosampler vials with Teflon-lined septa and crimp tops: 11- x 30-mm vials, and 11-mm silicone liner with Teflon face.

4.12. Portable crimper for sealing caps on autosampler vials.

4.13. Analytical balance: 100-g minimum capacity, 0.1-mg accuracy.

4.14. Analytical balance: 400-g minimum capacity, 1-mg accuracy.

4.15. Ultrasonic mixer.

4.16. Labels printed with QC sample numbers.

5. Reagents

5.1. Hexane (analytical-grade).

5.2. Blank vacuum pump oil. Any oil selected should be checked for interferences with the specific Aroclor chromatographic patterns.

6. Calibration and Standards

6.1. EPA Aroclor standards in isooctane or methanol are available in concentrations between 500 and 3000 μg/mL.

6.2. After opening the heat-sealed ampule containing an Aroclor standard, transfer the contents into a vial with a screw cap with Teflon/silicone septum. Wrap the cap with Teflon tape. Remove the original label and affix it to the vial or transfer the standards information to a label on the vial.

6.3. Solutions of PCBs may be prepared from pure PCBs in concentrations of 50-60 mg/mL.

6.4. Preparation of in-house standards in hexane.

6.4.1. Tare a 5-mL volumetric flask on a balance accurate to 0.1 mg. Add approximately 250-300 mg of a pure PCB to the bottom of the flask using a glass Pasteur pipette or a glass stirring rod. Record the mass added.

6.4.2. Dissolve the PCB and dilute it to volume with hexane. Mix by inversion.

6.4.3. Prepare a separate standard solution for each PCB desired. Do not mix Aroclors.

6.4.4. The standard concentration will be 50-60 mg/mL. See Step 8.1.

6.4.5. Transfer the standard to vials fitted with Teflon septa and caps. Wrap Teflon tape over and around the caps.

6.4.6. Label the vials with information identifying the standard.

6.5. Store the stock standards in a freezer.

7. Procedure

7.1. Discard used, PCB-contaminated flasks, bottles, and pipettes in the PCB waste container.

7.2. Cleaning of syringes.

7.2.1. Dedicate a group of syringes for use only with PCBs.

7.2.2. Fill the syringe with methanol through the needle. Discard the methanol into a waste container. Repeat for a total of 5-10 times.

7.2.3. Dry the syringe by pulling a vacuum on it for at least 10 min.

7.3. QC samples may be prepared in larger or smaller quantities than described in this procedure adjusting apparatus size as necessary. Preparation of 200 g of a PCB-in-oil QC sample from an in-house standard, or of 10 g of a PCB-in-oil QC sample from an EPA standard is described in this procedure.

7.4. QC sample preparation using in-house Aroclor standards.

7.4.1. Remove a vial of the desired in-house Aroclor standard from the freezer and allow it to reach room temperature.

7.4.2. Tare a clean 8-oz glass bottle on a balance accurate to 1 mg or better.

7.4.3. Add approximately 200 g of blank vacuum pump oil to the bottle. Record the mass of oil added.

7.4.4. Spike an aliquot of an in-house Aroclor standard into the oil using a syringe to reach the desired spike range. See Step 8.2.

7.4.5. Cap the bottle with a Teflon lid and label it with information identifying the sample.

7.4.6. Return the vial containing the in-house Aroclor standard to the freezer.

7.4.7. Prepare several PCB-in-oil QC samples using different Aroclors in hexane and different spike volumes to cover the entire spike range.

7.4.8. Mix the PCB-in-oil QC samples for at least 8 h in an ultrasonic mixer.

7.4.9. Store the samples at room temperature.

7.5. QC sample preparation using EPA Aroclor standards.

7.5.1. Choose an EPA Aroclor standard with a concentration between 500 and 3000 μg/mL to reach the desired concentration range in 10 g of oil.

7.5.2. Remove a vial of the chosen Aroclor standard from the freezer and allow it to reach room temperature.

7.5.3. Tare a clean 2-oz glass bottle on a balance accurate to 1 mg or better.

7.5.4. Add approximately 10 g of blank vacuum pump oil to the bottle. Record the mass of oil added.

7.5.5. Using a syringe, spike an aliquot of EPA aroclor standard into the oil to reach the desired spike range. See Step 8.3.

7.5.6. Cap the bottle with a Teflon lid and label it with information identifying the sample.

7.5.7. Return the vial containing the Aroclor standard to the freezer.

7.5.8. Prepare several PCB-in-oil QC samples using different EPA Aroclors and different spike volumes to cover the entire spike range.

7.5.9. Mix the PCB-in-oil QC samples for at least 8 h in an ultrasonic mixer.

7.5.10. Store the samples at room temperature.

7.6. Record QC standard information, sample number, sample description, spike amount, concentration, uncertainty, and all calculations in the QC Laboratory notebook and enter them into the CVS and CVD data bases on the VAX.

7.7. Prepare QC samples to equal at least 10% of the total number of samples to be analyzed.

7.7.1. Aliquot 1-2 mL of a PCB-in-oil QC sample into an autosampler vial and seal the vial with a crimp-top cap.

7.7.2. Label the vial with a QC sample number.

8. Calculations

8.1. Calculate the concentration of the in-house Aroclor standard prepared from pure PCBs as in the following example.

8.1.1. If 275.0 mg of pure PCB is diluted to 5.0 mL with hexane, the concentration of the PCB in the standard is 55 mg/mL.

$$\frac{275.0 \text{ mg}}{5.0 \text{ mL}} = 55 \text{ mg/mL}$$

8.2. Calculate spike concentrations from an in-house Aroclor standard as in the following example.

8.2.1. If 150 μL of a 55 mg/mL in-house Aroclor standard is spiked into 198.0 g of blank oil, the PCB concentration in the QC sample is 42 μg/g.

$$\frac{(55\ \text{mg/mL})\left(\frac{1\ \text{mL}}{1000\ \mu\text{L}}\right)\left(\frac{1000\ \mu\text{g}}{1\ \text{mg}}\right)(150\ \mu\text{L})}{198.0\ \text{g}} = 42\ \mu\text{g/g}$$

Multiply the result by the RSD calculated in Step 2.1 to obtain the uncertainty.

8.3. Calculate spike concentrations from an EPA Aroclor standard as in the following example.

8.3.1. If 800 μL of a 3000 μg/mL EPA Aroclor standard is spiked into 10 g of blank oil, the PCB concentration in the QC sample is 240 μg/g.

$$\frac{(3000\ \mu\text{g/mL})\left(\frac{1\ \text{mL}}{1000\ \mu\text{L}}\right)(800\ \mu\text{L})}{10\ \text{g}} = 240\ \mu\text{g/g}$$

Multiply the result by the RSD calculated in Step 2.1 to obtain the uncertainty.

8.4. Record the Aroclor concentrations in the QC samples in μg/g.

9. Proper Waste Disposal Practices

9.1. Solid waste.

9.1.1. PCB-contaminated solid waste, such as paper wipes, glass or plastic pipettes, empty vials, and incorrectly spiked QC samples, is accumulated in a covered metal can lined with a plastic bag and is kept segregated from non-PCB-contaminated solid waste.

9.1.2. The can is labeled with a label indicating its use for PCB-contaminated waste.

9.1.3. The can is opened only for the time necessary to add waste to it.

9.1.4. When the plastic bag is full, it is sealed with tape, removed from the can, identified as PCB-contaminated waste, and placed in a functioning chemical exhaust hood pending pickup by the Waste Management group.

9.1.5. A new plastic bag is put into the waste can for continued use.

9.2. Liquid waste.

9.2.1. PCB-contaminated liquid waste, such as rinses from PCB-contaminated syringes, PCB standards, and incorrectly spiked QC samples, is accumulated in a covered polyethylene bottle in a secondary containment tray and is kept segregated from non-PCB-contaminated liquid waste.

9.2.2. The bottle is labeled with a label indicating its use for PCB-contaminated waste and with a hazardous waste label if the waste contains hazardous components.

9.2.3. The bottle is opened only for the time necessary to add waste to it.

9.2.4. When the bottle is full, it is capped and kept in the secondary containment tray pending pickup by the Waste Management group.

9.2.5. A new bottle is labeled for further use.

9.3. Waste pickup.

9.3.1. Pickup by the Waste Management group of a full bag or bottle of PCB-contaminated waste is requested using the current Chemical Waste Disposal Request form. The current Waste Profile Request Form (WPRF) that describes the waste is referenced on the Chemical Waste Disposal Request.

9.3.2. The Waste Management group picks up the waste for disposal in accordance with Laboratory policy.

10. Source Materials

10.1. M. A. Gautier, E. S. Gladney, N. L. Koski, E. A. Jones, and B. T. O'Malley, "Quality Assurance for Health and Environmental Chemistry: 1990," Los Alamos National Laboratory report LA-12208-MS (1991).

10.2. M. A. Gautier, E. S. Gladney, N. L. Koski, E. A. Jones, and B. T. O'Malley, "Quality Assurance for Environmental Chemistry: 1991," Los Alamos National Laboratory report LA-12436-MS (1992).

10.3. M. A. Gautier, N. L. Koski, E. A. Jones, and B. T. O'Malley, "Quality Assurance for Health and Environmental Chemistry: 1992," Los Alamos National Laboratory report (in preparation).

10.4. "Hazardous and Mixed Waste," Administrative Requirement 10-3, in *Environment, Safety, and Health Manual*, Los Alamos National Laboratory Manual, Chapter 1 (most recent edition).

10.5. "Polychlorinated Biphenyls," Administrative Requirement 10-4, in *Environment, Safety, and Health Manual*, Los Alamos National Laboratory Manual, Chapter 1 (most recent edition).

Revisions or additions to the procedure are marked (▒▒▒▒). Where a section heading is marked, the entire section has been revised.

POLYCHLORINATED BIPHENYLS IN WATER — QC SAMPLE PREPARATION

Analyte: Polychlorinated biphenyls (PCBs)	**Method No.:** QCO180
Matrix: Water	**Spike Range:** 1-25 μg/L
Procedure: Analysis by gas chromatography with electron capture detection	**Accuracy and Precision:** 100% ± 4.3%
Effective Date: 01/23/92	**Authors:** Nancy L. Koski Margaret A. Gautier

SAFETY NOTE: Before beginning this procedure, read all of the Material Safety Data Sheets for the chemicals listed in Sec. 5. Read Sec. 4.3 of the EM-9 Safety Manual for information on personal protective clothing and equipment. Read Sec. 9 of this procedure and Source Material 10.1 for proper waste disposal practices.

1. Principle of Method

1.1. Prepare stock solutions of Aroclor 1242, 1254, and 1260 in methanol using pure Aroclor standards. Refer to Table I for Aroclors and associated CAS numbers.

TABLE I

Compound	CAS Number
Aroclor 1242	53469219
Aroclor 1254	11097691
Aroclor 1260	11096825
Total PCBs	1336363

1.2. Prepare a dilution of the PCB stock solutions.

1.3. Spike the dilution of the stock solution into 500 mL of distilled water.

2. Accuracy and Precision

2.1. The propagated error on QC preparation is based on the error of the standard and on the error associated with the use of the microsyringe, balance, and volumetric flask. Since the analyst uses the entire sample, it is not necessary to dilute the sample to exactly 500 mL, and the assumption is made that M7 = 1. A relative standard deviation of 4.3% at the 1σ level has been calculated for

standard preparation and for the weighing, spiking, and dilution process based on the following function:

$$D = \frac{M1 \times M2 \times M4 \times M6}{M3 \times M5 \times M7} ,$$

where D = calculated result,
M1 = standard error,
M2 = weighing error,
M3 = first dilution error,
M4 = first pipette error,
M5 = second dilution error,
M6 = second pipette error, and
M7 = third dilution error.

2.1.1. Calculate relative variance for each variable using the following equation.

$$R_M^2 = \frac{\sigma^2}{\overline{X}^2} ,$$

where R^2_M = relative variance,
M = $M_1 \ldots M_n$ (variable),
σ^2 = variance (std dev^2), and
$\overline{X}$ = mean value of each variable (M).

2.1.2. Calculate percent relative standard deviation using the following equation. Since the analyst uses the entire sample, it is not necessary to dilute the sample to exactly 500 mL, and the assumption is made that $R^2_{M7} = 0$.

$$S_{D_T} = \sqrt{R^2_{M1} + R^2_{M2} + R^2_{M3} + R^2_{M4} + R^2_{M5} + R^2_{M6} + R^2_{M7}} \times 100 ,$$

where SD_T = relative standard deviation (% error),
R^2_{M1} = relative variance of standard,
R^2_{M2} = relative variance of balance,
R^2_{M3} = relative variance of first volumetric flask,
R^2_{M4} = relative variance of first microsyringe,
R^2_{M5} = relative variance of second volumetric flask,
R^2_{M6} = relative variance of second microsyringe,

R^2_{M7} = relative variance of third volumetric flask, and
100 = factor to convert to percentage.

3. Collection and Storage of Samples

3.1. Distilled water is used as the blank matrix. Use water that has not been run through plastic tubing or stored in plastic holding vessels because phthalates, which are semivolatile organic compounds, may leach from plastics and contaminate the sample.

3.2. Spiked QC samples are refrigerated pending analysis. There is no holding time requirement for the analysis of PCB in water samples.

4. Apparatus

4.1. Volumetric flasks: 5-, and 10-mL, class A, glass.

4.2. Stirring rod: glass, 3- to 4-mm diam.

4.3. Pipettes: Pasteur, disposable glass.

4.4. Bulbs: rubber, to fit Pasteur pipettes.

4.5. Analytical balance: 100-g minimum capacity, 0.1-mg accuracy.

4.6. Vials: 1.5-mL, glass.

4.7. Caps: open-top to fit 1.5-mL vials.

4.8. Septa: Teflon/silicone discs to fit open-top caps.

4.9. Teflon tape.

4.10. Syringes: gas-tight, 25-, 50-, 100-, 250-, and 500-μL.

4.11. Bottles: 500-mL, wide-mouth, glass, amber, precleaned, with Teflon-lined lids.

4.12. Drying oven: capable of sustaining 100-150°C.

4.13. Labels printed with QC sample numbers.

5. Reagents

5.1. Methanol (analytical-grade).

6. Calibration and Standards

6.1. Prepare standard solutions from pure Aroclors in concentrations of 1-2 mg/mL.

6.1.1. Tare a 10-mL volumetric flask on an analytical balance.

6.1.2. Add approximately 10-20 mg of a pure Aroclor to the flask using a glass Pasteur pipette or a glass stirring rod. Record the mass added.

6.1.3. Dissolve the Aroclor and dilute it to volume with methanol. Mix by inversion.

6.1.4. Prepare a separate standard solution for each Aroclor desired. Do not mix Aroclors.

6.1.5. The concentration of PCB in the standard will be 1-2 mg/mL. See Step 8.1.

6.1.6. Transfer the standard to 1.5-mL vials fitted with Teflon septa and caps. Wrap Teflon tape over and around the caps.

6.1.7. Label the vials with information identifying the standard.

6.2. Prepare a dilution in methanol of the Aroclor standard solution at a concentration of approximately 50 μg/mL.

6.2.1. Add 4 mL of methanol to a clean 5-mL volumetric flask.

6.2.2. Using a syringe add an aliquot of the Aroclor standard with a concentration of 1-2 mg/mL to reach a PCB concentration in the dilution of approximately 50 μg/mL.

6.2.3. Bring the dilution to volume with methanol. Mix by inversion.

6.2.4. The concentration of PCB in the dilution should be approximately 50 μg/mL. See Step 8.2.

6.2.5. Transfer the dilution to vials fitted with Teflon septa and caps. Wrap Teflon tape over and around the cap.

6.2.6. Label the vials with information identifying the standard.

6.3. Store the standard solutions and dilutions in a freezer.

7. Procedure

7.1. Discard used, PCB-contaminated flasks, bottles, pipettes, and stirring rods as PCB-contaminated solid waste.

7.2. Cleaning of syringes.

7.2.1. Dedicate a group of syringes for use only with PCBs.

7.2.2. Fill the syringe with methanol through the needle. Discard the methanol into a PCB-contaminated liquid waste container. Repeat for a total of 5-10 times.

7.2.3. Dry the syringe by pulling a vacuum on it for a minimum of 10 min.

7.3. Prepare QC samples to equal at least 10% of the total number of samples to be analyzed.

7.3.1. Remove a vial containing a standard of the desired Aroclor with a concentration of approximately 50 μg/mL from the freezer and allow it to reach room temperature.

7.3.2. Fill a precleaned 500-mL amber bottle to the neck with distilled water. Use only distilled water that has not been stored in plastic or run through plastic tubing.

7.3.3. Using a syringe, spike a volume of the 50 μg/mL Aroclor standard below the surface of the water to reach the desired spike range. Blank QC samples may be made by spiking methanol into the water.

7.3.4. Cap the bottle and label it with a QC sample number.

7.3.5. The analyst will use the entire sample assuming a 500-mL volume.

7.3.6. Return the standard solution to the freezer.

7.3.7. Refrigerate the QC sample pending analysis.

7.4. Record QC standard information, sample number, sample description, spike amount, concentration, uncertainty, and all calculations in the QC Laboratory notebook and enter them into the CVS and CVD databases on the VAX.

8. Calculations

8.1. Calculate the concentration of the concentrated PCB standard prepared from pure Aroclor as in the following example.

8.1.1. If 13.2 mg of pure Aroclor is diluted to 10 mL with methanol, the concentration of PCB in the standard is 1.32 mg/mL.

$$\frac{13.2\ \text{mg}}{10\ \text{mL}} = 1.32\ \text{mg/mL}\ .$$

8.2. Calculate the concentration of the dilution of the PCB standard as in the following example.

8.2.1. If 190 μL of a PCB standard whose concentration is 1.32 mg/mL is diluted to 5 mL with methanol, the concentration of the dilute standard is 50.2 μg/mL.

$$\frac{\left(\frac{1.32\ \text{mg}}{1\ \text{mL}}\right)\left(\frac{1\ \text{mL}}{1000\ \mu\text{L}}\right)(190\ \mu\text{L})\left(\frac{1000\ \mu\text{g}}{1\ \text{mg}}\right)}{5\ \text{mL}} = 50.2\ \mu\text{g/mL}$$

8.3. Calculate the concentration of PCBs in the QC sample as in the following example.

8.3.1. If 150 μL of a 50.2 μg/mL PCB standard is spiked into 500-mL of distilled water, the concentration of PCBs in the QC sample will be 15.1 μg/L.

$$\frac{\left(\frac{50.2\ \mu\text{g}}{1\ \text{mL}}\right)\left(\frac{1\ \text{mL}}{1000\ \mu\text{L}}\right)(150\ \mu\text{L})}{(500\ \text{mL})\left(\frac{1\ \text{L}}{1000\ \text{mL}}\right)} = 15.1\ \mu\text{g/L}\ .$$

Multiply the result by the RSD calculated in Step 2.1 to obtain the uncertainty.

8.4. Record PCB concentrations in the QC sample in μg/L.

9. Proper Waste Disposal Practices

9.1. Solid waste.

9.1.1. Accumulate PCB-contaminated solid waste, such as paper wipes, glass or plastic pipettes, empty vials, and incorrectly spiked QC samples, in

a covered metal can lined with a plastic bag and keep it segregated from solid waste that is not contaminated with PCBs.

9.1.2. Label the can to indicate its use for PCB-contaminated waste.

9.1.3. Open the can only for the time necessary to add waste.

9.1.4. When the plastic bag is full, seal it with tape, remove it from the can, identify it as PCB-contaminated waste, and place it in a functioning chemical exhaust hood pending pickup by the Waste Management Group.

9.1.5. Put a new plastic bag into the waste can for continued use.

9.2. Liquid waste.

9.2.1. Accumulate PCB-contaminated liquid waste, such as rinses from PCB-contaminated syringes, PCB standards, and incorrectly spiked QC samples, in a covered polyethylene bottle in a secondary containment tray and keep it segregated from liquid waste that is not contaminated with PCBs.

9.2.2. Label the bottle to indicate its use for PCB-contaminated waste.

9.2.3. Open the bottle only for the time necessary to add waste to it.

9.2.4. When the bottle is full, cap it and keep it in the secondary containment tray pending pickup by the Waste Management group.

9.2.5. Label a new bottle for future use.

9.3. Waste pickup.

9.3.1. Request pickup by the Waste Management group of a full bag or bottle of PCB-contaminated waste using the current Chemical Waste Disposal Request (CWDR) form. The current Waste Profile Request Form (WPRF) that describes the waste is referenced on the CWDR.

9.3.2. The Waste Management group picks up the waste for disposal in accordance with Laboratory policy.

10. Source Materials

10.1. "Hazardous and Mixed Waste," Administrative Requirement 10-3, in *Environment, Safety, and Health Manual*, Los Alamos National Laboratory Manual, Chapter 1 (most recent edition).

10.2. "Polychlorinated Biphenyls," Administrative Requirement 10-4, in *Environment, Safety, and Health Manual*, Los Alamos National Laboratory Manual, Chapter 1 (most recent edition).

POLYCHLORINATED BIPHENYLS ON SOIL — QC SAMPLE PREPARATION

Analyte: Polychlorinated biphenyls (PCBs)	**Method No.:** QCO190
Matrix: Soil	**Spike Range:** 10-30 μg/g
Procedure: Analysis by gas chromatography with electron-capture detection (GCECD)	**Accuracy and Precision:** EPA standards - 100% ± 10.0% EM-9 standards - 100% ± 1.8%
Effective Date: 05/17/88	**Authors:** Nancy L. Koski Margaret A. Gautier

SAFETY NOTE: Before beginning this procedure, read all of the Material Safety Data Sheets for the chemicals listed in Sec 5. Read Sec. 4.3 of the EM-9 Safety Manual for information on personal protective clothing and equipment. Read Sec. 9 of this procedure and Source Materials 10.4 to 10.5 for proper waste disposal practices.

1. Principle of Method

1.1. Prepare stock solutions of PCB 1242, 1254, and 1260 in hexane, or obtain Environmental Protection Agency (EPA) Aroclor 1242, 1254, and 1260 standards. Refer to Table I for Aroclors and associated CAS numbers.

TABLE I

Compound	CAS Number
Aroclor 1242	53469219
Aroclor 1254	11097691
Aroclor 1260	11096825
Total PCBs	1336363

1.2. Spike the Aroclor standard directly onto a soil sample.

2. Accuracy and Precision

2.1. The propagated error on QC preparation is based on the error of the standard and on the error associated with use of the microsyringe, volumetric flask, and balance. A relative standard deviation (RSD) of 10.0% for EPA standards and 1.8% for in-house standards has been calculated for the error of the standard and for the spiking and weighing process based on the following:

2.1.1. EPA standard.

$$D = \frac{M1 \times M2}{M3} ,$$

where D = calculated results,
M1 = standard error,
M2 = spiking error, and
M3 = weighing error.

2.1.1.1. Calculate relative variance using the following equation.

$$R_M^2 = \frac{\sigma^2}{\overline{X}^2} ,$$

where R^2_M = relative variance,
M = $M_1 \ldots M_n$ (variable),
σ^2 = variance (std dev^2), and
$\overline{X}$ = mean value of each variable (M).

2.1.1.2. Calculate percent relative standard deviation using the following equation.

$$S_{D_T} = \sqrt{R_{M1}^2 + R_{M2}^2 + R_{M3}^2} \times 100 ,$$

where S_{D_T} = relative standard deviation (% error),
R^2_{M1} = relative variance of standard,
R^2_{M2} = relative variance of microsyringe,
R^2_{M3} = relative variance of balance, and
100 = factor to convert to percentage.

2.1.2. In-house standard.

$$U = \frac{M1 \times M2 \times M4 \times M6}{M3 \times M5 \times M7} ,$$

where U = uncertainty,
M1 = standard error,
M2 = first weighing error,

M3 = first dilution error,
M4 = first spiking error,
M5 = second dilution error,
M6 = second spiking error, and
M7 = second weighing error.

2.1.2.1. Calculate relative variance using the following equation.

$$R_M^2 = \frac{\sigma^2}{\overline{X}^2} ,$$

where R^2_M = relative variance,
M = $M_1 \ldots M_n$ (variable),
σ^2 = variance (std dev^2), and
$\overline{X}$ = mean value of each variable (M).

2.1.2.2. Calculate percent relative standard deviation using the following equation.

$$S_{D_T} = \sqrt{R^2_{M1} + R^2_{M2} + R^2_{M3} + R^2_{M4} + R^2_{M5} + R^2_{M6} + R^2_{M7}} \times 100 ,$$

where S_{DT} = relative standard deviation (% error),
R^2_{M1} = relative variance of standard,
R^2_{M2} = relative variance of first balance,
R^2_{M3} = relative variance of first volumetric flask,
R^2_{M4} = relative variance of first microsyringe,
R^2_{M5} = relative variance of second volumetric flask,
R^2_{M6} = relative variance of second microsyringe,
R^2_{M7} = relative variance of second balance, and
100 = factor to convert to percentage.

2.2. Analyses by GCECD of QC samples prepared between 1990 and 1992 using this procedure and analyzed by gas chromatography with electron-capture detection are tabulated below. The data are published in Source Materials 10.1 to 10.3.

PCB ON SOIL SPIKE RECOVERY DATA (% recovery ± std dev)									
	1990			1991			1992		
	Mean	± SD	N	Mean	± SD	N	Mean	± SD	N
	Soil								
Aroclor 1242	106	± 36	(19)	90	± 20	(13)	88	± 29	(20)
Aroclor 1254	72		(2)	74	± 28	(7)	63	± 23	(10)
Aroclor 1260	94	± 19	(27)	111	± 29	(16)	84	± 33	(25)
Total Aroclor	98	± 27	(48)	96	± 29	(36)	82	± 31	(55)

3. Collection and Storage of Samples

3.1. The blank soil matrix and the spiked samples should be stored in glass bottles fitted with Teflon lids. Avoid using plastic containers and lids because phthalates may leach from plastics and contaminate the soil.

3.2. Spiked QC samples are stored at room temperature pending analysis. A study performed in 1989-1990 showed no appreciable difference in analyte recovery between samples stored at room temperature and those stored in the refrigerator.

4. Apparatus

4.1. Syringes: gas-tight, 100-, 250-, and 1000-μL.

4.2. Bottles: 1/2-oz, glass with Teflon-lined lids.

4.3. Vials: 1.5-mL, glass.

4.4. Caps: open-top to fit vials.

4.5. Septa: Teflon/silicone discs to fit open-top caps

4.6. Teflon tape.

4.7. Analytical balance: 100-g minimum capacity, 0.1-mg accuracy.

4.8. Pipettes: Pasteur, disposable glass.

4.9. Pipette bulb: rubber, to fit Pasteur pipette.

4.10. Stirring rod: glass, 3- to 4-mm diameter.

4.11. Volumetric flasks: 5-mL, class A, glass.

4.12. Labels printed with QC sample numbers.

5. Reagents

5.1. Hexane (analytical-grade).

5.2. Soil. A clean, dry 8-g aliquot is required for each sample. A suitable soil does not contain the analyte of interest and presents few interferences to the analytical method.

5.3. Blank soil heated to nominally 100°C for 5 h and stored in glass is used as a sample matrix.

6. Calibration and Standards

6.1. EPA Aroclor standards in isooctane or methanol are available in PCB concentrations between 500 and 3000 μg/mL.

6.2. After opening the heat-sealed ampules containing Aroclor standards, transfer the contents into vials with screw caps with Teflon/silicone septa. Wrap the caps with Teflon tape. Remove the original label and affix it to the vial or transfer the standards information to a label on the new vial.

6.3. Solutions of PCBs may be prepared from pure PCBs in concentrations of 50-60 mg/mL.

6.4. Preparation of in-house standards in hexane.

6.4.1. Tare a 5-mL volumetric flask on an analytical balance. Add approximately 250-300 mg of a pure PCB to the bottom of the flask using a glass Pasteur pipette or a glass stirring rod. Record the mass added.

6.4.2. Dissolve the PCB and dilute it to volume with hexane. Mix by inversion.

6.4.3. Prepare a separate standard solution for each PCB desired. Do not mix Aroclors.

6.4.4. The standard concentration will be 50-60 mg/mL. See Step 8.1.

6.4.5. Transfer the standard to vials fitted with Teflon septa and caps. Wrap Teflon tape over and around the caps.

6.4.6. Label the vials with information identifying the standard.

6.5. Prepare a 1:10 dilution of the in-house standard in hexane.

6.5.1. Add 4 mL of hexane to a clean 5-mL volumetric flask.

6.5.2. Using a syringe, add 500 μL of 50-60 mg/mL Aroclor in-house standard to the hexane in the flask.

6.5.3. Dilute the standard to volume with hexane. Mix by inversion.

6.5.4. The concentration of the dilution will be 5000-6000 μg/mL. See Step 8.2.

6.5.5. Transfer the standard to vials fitted with Teflon septa and caps. Wrap Teflon tape over and around the caps.

6.5.6. Label the vials with information identifying the standard.

6.6. Store stock standards in a freezer.

7. Procedure

7.1. Discard used, PCB-contaminated flasks, bottles, and pipettes in the PCB waste container.

7.2. Cleaning of syringes.

7.2.1. Dedicate a group of syringes for use only with PCBs.

7.2.2. Fill the syringe with methanol through the needle. Discard the methanol into a waste container. Repeat for a total of 5-10 times

7.2.3. Dry the syringe by pulling a vacuum on it for at least 10 min.

7.3. Prepare QC samples to equal at least 10% of the total number of samples to be analyzed.

7.3.1. Accurately weigh 8 g of blank soil into a 1/2-oz glass bottle with a Teflon-lined lid. Record the mass of soil on the bottle with a felt-tipped pen for reference by the analyst.

7.3.2. Remove a vial containing a standard of the desired Aroclor in the concentration range 500-6000 μg/mL from the freezer and allow it to reach room temperature.

7.3.3. Spike a volume of the standard directly onto the soil to reach the desired spike range. Avoid wetting the bottle walls. The analyst will desorb the entire sample in the bottle. See Step 8.3.

7.3.4. Cap the bottle and label it with a QC sample number.

7.3.5. Return the vial containing the Aroclor standard to the freezer.

7.3.6. Record QC standard information, sample number, sample description, spike amount, concentration, uncertainty, and all calculations in the QC Laboratory notebook and enter them into the CVS and CVD data bases on the VAX.

7.3.7. Store the QC samples at room temperature pending analysis.

8. Calculations

8.1. Calculate the concentration of the concentrated PCB standard prepared from pure PCBs as in the following example.

8.1.1. If 275.0 mg of pure PCB is diluted to 5 mL with hexane, the concentration of the PCB in the standard is 55 mg/mL.

$$\frac{275.0 \text{ mg}}{5 \text{ mL}} = 55 \text{ mg/mL}$$

8.2. Calculate the concentration of the 1:10 dilution of the concentrated PCB standard as in the following example.

8.2.1. If 500 μL of a PCB standard whose concentration is 55 mg/mL is diluted to 5 mL with hexane, the concentration of the dilute standard is 5500 μg/mL.

$$\frac{(55 \text{ mg/mL}) \left(\frac{1 \text{ mL}}{1000 \ \mu\text{L}}\right) (500 \ \mu\text{L}) \left(\frac{1000 \ \mu\text{g}}{1 \text{ mg}}\right)}{5 \text{ mL}} = 5500 \ \mu\text{g/mL}$$

8.3. Calculate spike concentrations as in the following example.

8.3.1. If 50 μL of a 5500 μg/mL PCB standard is spiked onto 8.0005 g of soil, the PCB concentration in the QC sample is 34 μg/g.

$$\frac{(5500 \ \mu\text{g/mL}) \left(\frac{1 \text{ mL}}{1000 \ \mu\text{L}}\right) (50 \ \mu\text{L})}{8.0005 \text{ g}} = 34 \ \mu\text{g/g}$$

Multiply the result by the RSD calculated in Step 2.1 to obtain the uncertainty.

8.4. Record Aroclor concentrations in the QC samples in $\mu g/g$.

9. Proper Waste Disposal Practices

9.1. Solid waste.

9.1.1. PCB-contaminated solid waste, such as paper wipes, glass or plastic pipettes, empty vials, and incorrectly spiked QC samples, is accumulated in a covered metal can lined with a plastic bag and is kept segregated from non-PCB-contaminated solid waste.

9.1.2. The can is labeled with a label indicating its use for PCB-contaminated waste.

9.1.3. The can is opened only for the time necessary to add waste to it.

9.1.4. When the plastic bag is full, it is sealed with tape, removed from the can, identified as PCB-contaminated waste, and placed in a functioning chemical exhaust hood pending pickup by the Waste Management group.

9.1.5. A new plastic bag is put into the waste can for continued use.

9.2. Liquid waste.

9.2.1. PCB-contaminated liquid waste, such as rinses from PCB-contaminated syringes, PCB standards, and incorrectly spiked QC samples, is accumulated in a covered polyethylene bottle in a secondary containment tray and is kept segregated from non-PCB-contaminated liquid waste.

9.2.2. The bottle is labeled with a label indicating its use for PCB-contaminated waste and with a hazardous waste label if the waste contains hazardous components.

9.2.3. The bottle is opened only for the time necessary to add waste to it.

9.2.4. When the bottle is full, it is capped and kept in the secondary containment tray pending pickup by the Waste Management group.

9.2.5. A new bottle is labeled for further use.

9.3. Waste pickup.

9.3.1. Pickup by the Waste Management group of a full bag or bottle of PCB-contaminated waste is requested using the current Chemical Waste Disposal Request form. The current Waste Profile Request Form (WPRF) that describes the waste is referenced on the Chemical Waste Disposal Request.

9.3.2. The Waste Management group picks up the waste for disposal in accordance with Laboratory policy.

10. Source Materials

10.1. M. A. Gautier, E. S. Gladney, N. L. Koski, E. A. Jones, and B. T. O'Malley, "Quality Assurance for Health and Environmental Chemistry: 1990," Los Alamos National Laboratory report LA-12208-MS (1991).

10.2. M. A. Gautier, E. S. Gladney, N. L. Koski, E. A. Jones, and B. T. O'Malley, "Quality Assurance for Environmental Chemistry: 1991," Los Alamos National Laboratory report LA-12436-MS (1992).

10.3. M. A. Gautier, N. L. Koski, E. A. Jones, and B. T. O'Malley, "Quality Assurance for Health and Environmental Chemistry: 1992," Los Alamos National Laboratory report (in preparation).

10.4. "Hazardous and Mixed Waste," Administrative Requirement 10-3, in *Environment, Safety, and Health Manual*, Los Alamos National Laboratory Manual, Chapter 1 (most recent edition).

10.5. "Polychlorinated Biphenyls," Administrative Requirement 10-4, in *Environment, Safety, and Health Manual*, Los Alamos National Laboratory Manual, Chapter 1 (most recent edition).

Revisions or additions to the procedure are marked (▒). Where a section heading is marked, the entire section has been revised.

POLYCHLORINATED BIPHENYLS ON SWIPES — QC SAMPLE PREPARATION

Analyte: Polychlorinated biphenyls (PCBs)	**Method No.:** QCO200
Matrix: Gauze Swipes	**Spike Range:** 5-20 μg/sample
Procedure: Analysis by gas chromatography with electron-capture detection (GCECD)	**Accuracy and Precision:** EPA standards - 100% ± 10.1% EM-9 standards - 100% ± 5.2%
Effective Date: 06/05/87	**Authors:** Nancy L. Koski Margaret A. Gautier

SAFETY NOTE: Before beginning this procedure, read all of the Material Safety Data Sheets for the chemicals listed in Sec. 5. Read Sec. 4.3 of the EM-9 Safety Manual for information on personal protective clothing and equipment. Read Sec. 9 of this procedure and Source Materials 10.4 to 10.5 for proper waste disposal practices.

1. Principle of Method

1.1. Prepare stock solutions of PCB 1242, 1254, and 1260 in hexane, or obtain Environmental Protection Agency (EPA) Aroclor 1242, 1254, and 1260 standards. Refer to Table I for Aroclors and associated CAS numbers.

TABLE I.

Compound	CAS Number
Aroclor 1242	53469219
Aroclor 1254	11097691
Aroclor 1260	11096825
Total PCBs	1336363

1.2. Spike an Aroclor standard onto a blank 2- × 2-in. gauze in a 1/2-oz bottle. The analyst will desorb in this container.

2. Accuracy and Precision

2.1. The propagated error on QC preparation is based on the error of the standard and on the error associated with use of the microsyringe, balance, and volumetric flasks. A relative standard deviation (RSD) of 10.1% for EPA standards and 2.0% for in-house standards has been calculated for the error of the standard and for weighing, dilution, and spiking, based on the following:

2.1.1. EPA standard.

$$D = M1 \times M2 \quad ,$$

where D = calculated result,
M1 = standard error, and
M2 = spiking error.

2.1.1.1. Calculate relative variance using the following equation.

$$R_M^2 = \frac{\sigma^2}{\overline{X}^2} \quad ,$$

where R^2_M = relative variance,
M = $M_1 \ldots M_n$ (variable),
σ^2 = variance (std dev^2), and
$\overline{X}$ = mean value of each variable (M).

2.1.1.2. Calculate percent relative standard deviation using the following equation.

$$S_{D_T} = \sqrt{R_{M1}^2 + R_{M2}^2} \times 100 \quad ,$$

where SD_T = relative standard deviation (% error),
R^2_{M1} = relative variance of standard,
R^2_{M2} = relative variance of microsyringe, and
100 = factor to convert to percentage.

2.1.2. In-house standard.

$$U = \frac{M1 \times M2 \times M4 \times M6}{M3 \times M5} ,$$

where U = uncertainty,
M1 = standard error,
M2 = weighing error
M3 = dilution error,
M4 = spiking error,
M5 = second dilution error, and
M6 = second spiking error.

2.1.2.1. Calculate relative variance using the following equation.

$$R_M^2 = \frac{\sigma^2}{\overline{X}^2} ,$$

where $R^2{}_M$ = relative variance,
M = $M_1 \ldots . M_n$ (variable),
σ^2 = variance (std dev^2), and
$\overline{X}$ = mean value of each variable (M).

2.1.2.2. Calculate percent relative standard deviation using the following equation.

$$S_{D_T} = \sqrt{R_{M1}^2 + R_{M2}^2 + R_{M3}^2 + R_{M4}^2 + R_{M5}^2 + R_{M6}^2} \times 100 ,$$

where SD_T = relative standard deviation (% error),
$R^2{}_{M1}$ = relative variance of standard
$R^2{}_{M2}$ = relative variance of balance,
$R^2{}_{M3}$ = relative variance of volumetric flask,
$R^2{}_{M4}$ = relative variance of microsyringe,
$R^2{}_{M5}$ = relative variance of second volumetric flask,
$R^2{}_{M6}$ = relative variance of second microsyringe, and
100 = factor to convert to percentage

2.2. Analyses by GCECD of QC samples prepared between 1990 and 1992 using this procedure are tabulated below. The data are published in Source Materials 10.1 to 10.3.

PCB ON SWIPES SPIKE RECOVERY DATA (% recovery ± std dev)												
	1990				1991				1992			
	Mean	±	SD	N	Mean	±	SD	N	Mean	±	SD	N
Aroclor 1242	96	±	30	(28)	105	±	34	(25)	86	±	30	(16)
Aroclor 1254	98	±	2	(9)	104	±	30	(26)	112	±	25	(33)
Aroclor 1260	95	±	19	(48)	104	±	27	(31)	89	±	11	(14)
Total Aroclor	96	±	24	(85)	104	±	30	(82)	100	±	27	(63)

3. Collection and Storage of Samples

3.1. Spiked QC samples are stored at room temperature pending analysis. A study performed between 1989 and 1990 showed no appreciable difference in analyte recovery between samples stored at room temperature and those stored in the refrigerator.

3.2. There is no holding time requirement for the analysis of PCB on swipe samples.

4. Apparatus

4.1. Syringes: gas-tight, 25-, 50- and 100-μL.

4.2. Bottles: 1/2-oz, glass with Teflon-lined screw-on lids.

4.3. Gauze pads: 2 × 2 in.

4.4. Vials: 1.5-mL, glass.

4.5. Caps: open-top, to fit 1.5-mL vials.

4.6. Septa: Teflon/silicone discs to fit open-top caps.

4.7. Teflon tape.

4.8. Analytical balance: 100-g minimum capacity, 0.1-mg accuracy.

4.9. Pipettes: Pasteur, disposable glass.

4.10. Pipette bulb: rubber, to fit Pasteur pipette.

4.11. Stirring rod: glass, 3- to 4-mm diameter.

4.12. Volumetric flasks: 5-mL, class A, glass.

4.13. Labels printed with QC sample numbers.

5. Reagents

5.1. Hexane (analytical-grade).

6. Calibration and Standards

6.1. EPA Aroclor standards in isooctane or methanol are available in concentrations between 500 and 3000 μg/mL.

6.2. After opening the heat-sealed ampul containing an Aroclor standard; transfer the contents into vials fitted with screw caps with Teflon septa. Wrap the caps with Teflon tape. Remove the original label and affix it to the vial or transfer the standard information to a label on the vial.

6.3. Solutions of PCBs may be prepared from pure PCBs in concentrations of 50-60 mg/mL.

6.4. Preparation of in-house standards in hexane.

6.4.1. Tare a 5-mL volumetric flask on an analytical balance. Add approximately 250-300 mg of a pure PCB to the flask using a glass Pasteur pipette or a glass stirring rod. Record the mass added.

6.4.2. Dissolve the PCB and dilute it to volume with hexane. Mix by inversion.

6.4.3. Prepare a separate standard solution for each PCB desired. Do not mix Aroclors.

6.4.4. The standard concentration will be 50-60 mg/mL. See Step 8.1.

6.4.5. Transfer the standard to vials fitted with Teflon septa and caps. Wrap Teflon tape over and around the caps.

6.4.6. Label the vials with information identifying the standard.

6.5. Prepare a 1:100 dilution of the in-house standard in hexane.

6.5.1. Add 4 mL of hexane to a clean 5-mL volumetric flask.

6.5.2. Using a syringe, add 50 μL of a 50-60 mg/mL Aroclor in-house standard prepared in Step 6.4 to the hexane in the flask.

6.5.3. Dilute the standard to volume with hexane. Mix by inversion.

6.5.4. The concentration of the dilution will be 0.5-0.6 mg/mL or 500-600 μg/mL. See Step 8.2.

6.5.5. Transfer the standard to vials fitted with Teflon septa and caps. Wrap Teflon tape over and around the caps.

6.5.6. Label the vials with information identifying the standard.

6.6. Store the stock standards in a freezer.

7. Procedure

7.1. Discard used, PCB-contaminated flasks, bottles, and pipettes in the PCB waste container.

7.2. Cleaning of syringes.

7.2.1. Dedicate a group of syringes for use only with PCBs.

7.2.2. Fill the syringe with methanol through the needle. Discard the methanol into a waste container. Repeat for a total of 5-10 times.

7.2.3. Dry the syringe by pulling a vacuum on it for at least 10 min.

7.3. Prepare QC samples to equal at least 10% of the total number of samples to be analyzed.

7.3.1. Remove a vial containing a standard of the desired Aroclor in the concentration range 500-1000 μg/mL from the freezer and allow it to reach room temperature.

7.3.2. Place a 2- x 2-in. blank gauze pad into a clean 1/2-oz bottle fitted with a Teflon-lined cap.

7.3.3. Spike an aliquot of PCB standard directly onto the gauze surface to reach the desired spike range. The analyst will desorb the sample in the bottle. See Step 8.3.

7.3.4. Cap the vial and label it with a QC number.

7.3.5. Return the vial containing the Aroclor standard to the freezer.

7.3.6. Store the QC samples at room temperature pending analysis.

7.4. Record QC standard information, sample number, sample description, spike amount, concentration, uncertainty, and all calculations in the QC Laboratory notebook and enter them into the CVS and CVD databases on the VAX.

8. Calculations

8.1. Calculate the concentration of the concentrated PCB standard prepared from pure PCBs as in the following example.

8.1.1. If 275.0 mg of pure PCB is diluted to 5 mL with hexane, the concentration of the PCB in the standard is 55 mg/mL.

$$\frac{275.0 \text{ mg}}{5 \text{ mL}} = 55 \text{ mg/mL}$$

8.2. Calculate the concentration of the 1:100 dilution of the concentrated PCB standard as in the following example.

8.2.1. If 50 μL of a PCB standard whose concentration is 55 mg/mL is diluted to 5 mL with hexane, the concentration of the dilute standard is 550 μg/mL.

$$\frac{(55 \text{ mg/mL}) \left(\frac{1 \text{ mL}}{1000 \ \mu\text{L}}\right) (50 \ \mu\text{L}) \left(\frac{1000 \ \mu\text{g}}{1 \text{ mg}}\right)}{5 \text{ mL}} = 550 \ \mu\text{g/mL}$$

8.3. Calculate the concentration of PCB spiked onto a gauze sample as in the following example.

8.3.1. If 24 μL of a 550 μg/mL PCB standard is spiked onto a gauze square, the PCB concentration in the QC sample is 13 μg/sample.

$$\frac{(550 \ \mu\text{g/mL}) \left(\frac{1 \text{ mL}}{1000 \ \mu\text{L}}\right) (24 \ \mu\text{L})}{\text{sample}} = 13 \ \mu\text{g/sample}$$

Multiply the result by the RSD calculated in Step 2.1 to obtain the uncertainty.

8.4. Record Aroclor concentrations in μg/sample.

9. Proper Waste Disposal Practices

9.1. Solid waste.

9.1.1. PCB-contaminated solid waste, such as paper wipes, glass or plastic pipettes, empty vials, and incorrectly spiked QC samples, is accumulated in a covered metal can lined with a plastic bag and is kept segregated from non-PCB-contaminated solid waste.

9.1.2. The can is labeled with a label indicating its use for PCB-contaminated waste.

9.1.3. The can is opened only for the time necessary to add waste to it.

9.1.4. When the plastic bag is full, it is sealed with tape, removed from the can, identified as PCB-contaminated waste, and placed in a functioning chemical exhaust hood pending pickup by the Waste Management group.

9.1.5. A new plastic bag is put into the waste can for continued use.

9.2. Liquid waste.

9.2.1. PCB-contaminated liquid waste, such as rinses from PCB-contaminated syringes, PCB standards, and incorrectly spiked QC samples, is accumulated in a covered polyethylene bottle in a secondary containment tray and is kept segregated from non-PCB-contaminated liquid waste.

9.2.2. The bottle is labeled with a label indicating its use for PCB-contaminated waste and with a hazardous waste label if the waste contains hazardous components.

9.2.3. The bottle is opened only for the time necessary to add waste to it.

9.2.4. When the bottle is full, it is capped and kept in the secondary containment tray pending pickup by the Waste Management group.

9.2.5. A new bottle is labeled for further use.

9.3. Waste pickup.

9.3.1. Pickup by the Waste Management group of a full bag or bottle of PCB-contaminated waste is requested using the current Chemical Waste Disposal Request form. The current Waste Profile Request Form (WPRF) that describes the waste is referenced on the Chemical Waste Disposal Request.

9.3.2. The Waste Management group picks up the waste for disposal in accordance with Laboratory policy.

10. Source Materials

10.1. M. A. Gautier, E. S. Gladney, N. L. Koski, E. A. Jones, and B. T. O'Malley, "Quality Assurance for Health and Environmental Chemistry: 1990," Los Alamos National Laboratory report LA-12208-MS (1991).

10.2. M. A. Gautier, E. S. Gladney, N. L. Koski, E. A. Jones, and B. T. O'Malley, "Quality Assurance for Environmental Chemistry: 1991," Los Alamos National Laboratory report LA-12436-MS (1992).

10.3. M. A. Gautier, N. L. Koski, E. A. Jones, and B. T. O'Malley, "Quality Assurance for Health and Environmental Chemistry: 1992," Los Alamos National Laboratory report (in preparation).

10.4. "Hazardous and Mixed Waste," Administrative Requirement 10-3, in *Environment, Safety, and Health Manual*, Los Alamos National Laboratory Manual, Chapter 1 (most recent edition).

10.5. "Polychlorinated Biphenyls," Administrative Requirement 10-4, in *Environment, Safety, and Health Manual*, Los Alamos National Laboratory Manual, Chapter 1 (most recent edition).

Revisions or additions to the procedure are marked (▒). Where a section heading is marked, the entire section has been revised.

TOTAL PETROLEUM HYDROCARBONS ON SOIL — QC SAMPLE PREPARATION

Analyte: Total petroleum hydrocarbons	**Method No.:** QCO225
Matrix: Soil	**Spike Range:** 50-200 μg/g
Procedure: Analysis by infrared absorption (IR)	**Accuracy and Precision:**
Effective Date: 01/20/93	**Authors:** Michael N. Jasperson Nancy L. Koski Margaret A. Gautier

SAFETY NOTE: Before beginning this procedure, read all of the Material Safety Data Sheets for the chemicals listed in Sec. 5. Read Sec. 4.3 of the EM-9 Safety Manual for information on personal protective clothing and equipment. Read Sec. 9 of this procedure and Source Material 10.1 for proper waste disposal practices.

1. Principle of Method

1.1. Prepare a standard solution of vacuum pump oil in Freon.

1.2. Spike aliquots of the standard solution directly onto soil samples.

1.3. QC samples are submitted for analysis with each analytical batch and are analyzed along with the unknown samples using the same analytical procedure.

2. Accuracy and Precision

2.1. The propagated error on QC preparation is based on the calibration error of the standard and on the error associated with use of the volumetric flask, microsyringe, and balance. A relative standard deviation (RSD) of 5.2% at the 1σ level has been calculated for the error of the standard and for the spiking, weighing, and dilution process based on the following function:

$$D = \frac{M1 \times M2 \times M4}{M3 \times M5} ,$$

where D = calculated result,
M1 = standard error,
M2 = weighing error,
M3 = dilution error,
M4 = spiking error, and
M5 = weighing error.

2.1.1. Calculate relative variance using the following equation.

$$R^{2}_{M} = \frac{\sigma^2}{\overline{X}^2} ,$$

where R^2_M = relative variance,
M = $M_1 \ldots M_n$ (variable),
σ^2 = variance (std dev^2), and
$\overline{X}$ = mean value of each variable (M).

2.1.2. Calculate percent relative standard deviation using the following equation.

$$S_{D_T} = \sqrt{R^2_{M1} + R^2_{M2} + R^2_{M3} + R^2_{M4} + R^2_{M5}} \times 100 ,$$

where SD_T = relative standard deviation (% error),
R^2_{M1} = relative variance of standard,
R^2_{M2} = relative variance of balance,
R^2_{M3} = relative variance of volumetric flask,
R^2_{M4} = relative variance of microsyringe,
R^2_{M5} = relative variance of balance, and
100 = factor to convert to percentage.

2.2. Analysis by infrared absorption of QC samples (N = 2) prepared using this procedure in 1993 gave a mean recovery of 74% ± 13% at the 1σ level.

3. Collection and Storage of Samples

3.1. The blank soil matrix and the spiked samples should be stored in glass bottles fitted with Teflon-lined lids. Avoid using plastic containers and lids because phthalates may leach from plastics and contaminate the soil.

3.2. Spiked QC samples may be stored at room temperature or refrigerated pending analysis.

4. Apparatus

4.1. Syringes: gas-tight, 100- and 250-μL.

4.2. Bottles: 40-mL, precleaned, glass with Teflon-lined lids.

4.3. Analytical balance: 100-g minimum capacity, 0.1-mg accuracy.

4.4. Pipettes: Pasteur, disposable glass.

4.5. Bulbs: rubber to fit Pasteur pipettes.

4.6. Volumetric flasks: 2-mL, class A, glass.

4.7. Label printed with QC sample numbers.

4.8. Spatula.

4.9. Laboratory oven: capable of sustaining 100-150°C.

5. Reagents

5.1. Freon 113 (analytical-grade).

5.2. Soil. A clean, dry 10-g aliquot is required for each sample.

5.2.1. A suitable soil does not contain the analyte of interest and presents few interferences to the analytical method.

5.2.2. Blank soil heated to nominally 100°C for 5 h and stored in glass is used as a sample matrix.

6. Calibration and Standards

6.1. Prepare a standard solution of vacuum pump oil in Freon 113.

6.1.1. Tare a 2-mL volumetric flask on an analytical balance. Add approximately 20 mg of vacuum pump oil to the bottom of the flask using a Pasteur pipette. Record the mass added.

6.1.2. Dissolve the vacuum pump oil and dilute the solution to volume with Freon 113. Mix by inversion.

6.1.3. The standard concentration will be approximately 10 mg/mL.

6.1.4. Prepare a new standard solution each day that it is needed.

7. Procedure

7.1. Cleaning glassware.

7.1.1. Wash the volumetric flask with detergent and rinse with hot tap water and with methanol.

7.1.2. Store glassware in a laboratory oven maintained at 100-150°C to minimize contamination.

7.2. Cleaning of syringes.

7.2.1. Dedicate a group of syringes for use with total petroleum hydrocarbons.

7.2.2. Fill the syringe with methanol through the needle. Discard the methanol into a waste container. Repeat a total of 5-10 times.

7.2.3. Dry the syringe by pulling a vacuum on it for a minimum of 10 min.

7.3. Prepare QC samples to equal at least 10% of the total number of samples to be analyzed.

7.3.1. Accurately weigh 10 g of blank soil into a 40-mL, precleaned glass bottle with a Teflon-lined lid. Record the mass of soil on the bottle with a felt-tipped pen for reference by the analyst.

7.3.2. Spike a volume of the standard directly onto the soil to reach the desired spike range. Avoid wetting the bottle walls. The analyst will desorb the entire sample in the bottle.

7.3.3. Cap the bottle and label it with a QC sample number.

7.3.4. Record QC standard information, sample number, sample description, spike amount, concentration, uncertainty, and all calculations in the QC Laboratory notebook and enter them into the CVS and CVD data bases on the VAX.

7.3.5. Store the QC samples refrigerated or at room temperature pending analysis.

7.3.6. Dispose of the excess standard solution as liquid waste containing organic compounds.

8. Calculations

8.1. Calculate the concentration of total petroleum hydrocarbons in the standard solution as in the following example.

8.1.1. If 20.7 mg of vacuum pump oil is dissolved in 2 mL of Freon, the concentration of the vacuum pump oil is 10.35 mg/mL.

$$\frac{20.7\ \text{mg}}{2.0\ \text{mL}} = 10.35\ \text{mg/mL}\ .$$

8.2. Calculate the concentration of total petroleum hydrocarbons in the QC sample as in the following example.

8.2.1. If 60 μL of a standard containing 10.35 mg/mL of total petroleum hydrocarbons is spiked onto 10.0047 of soil, the concentration of total petroleum hydrocarbons in the QC sample is 62 μg/g.

$$\frac{\left(\frac{10.35\ \text{mg}}{1\ \text{mL}}\right)\left(\frac{1\ \text{mL}}{1000\ \mu\text{L}}\right)\left(\frac{1000\ \mu\text{g}}{1\ \text{mg}}\right)(60\ \mu\text{L})}{10.0047\ \text{g}} = 62\ \mu\text{g/g}\ .$$

Multiply the result by the RSD calculated in Step 2.1 to obtain the uncertainty.

8.3. Record the concentration of total petroleum hydrocarbons in the QC sample in μg/g.

9. Proper Waste Disposal Practices

9.1. Solid waste.

9.1.1. Accumulate solid waste, such as paper wipes, glass or plastic pipettes, empty vials, and incorrectly spiked QC samples contaminated with organic compounds in a covered metal can lined with a plastic bag. Keep this segregated from PCB-contaminated solid waste and solid waste that is not contaminated with organic compounds.

9.1.2. Label the can with a hazardous waste label and a label indicating its use for waste contaminated with organic compounds.

9.1.3. Open the can only for the time necessary to add waste.

9.1.4. When the plastic bag is full, seal it with tape, remove it from the can, and identify it as waste contaminated with organic compounds.

9.1.5. Place a new plastic bag into the waste can for continued use.

9.1.6. Accumulate the sealed bags in a larger container lined with a plastic bag and approved for the storage and transport of waste contaminated with organic compounds.

9.1.7. Identify the sealed bag with the current Waste Profile Request form (WPRF) number describing the waste along with the sealed bag.

9.1.8. Label the larger container with a hazardous waste label and a label indicating its use for waste contaminated with organic compounds.

9.1.9. The larger container has a sealing cover. Open the can only for the time necessary to add waste.

9.1.10. When the plastic bag liner is full, seal it with tape and keep in the sealed container pending pickup by the Waste Management group.

9.2. Liquid waste.

9.2.1. Liquid waste containing organic compounds, such as rinses from syringes, excess QC samples, and incorrectly spiked QC samples, is accumulated in a covered metal can in a secondary containment tray.

9.2.1.1. Liquid waste containing organic compounds but no PCBs is kept segregated from PCB-contaminated liquid waste.

9.2.1.2. Label the can with a hazardous waste label and a label indicating its use for waste containing organic compounds.

9.2.1.3. Cap the can when full, and keep in the secondary containment tray pending pickup by the Waste Management group.

9.2.1.4. Label a new can for future use.

9.2.2. Accumulate 2-mL vials containing out-of-date spiking solutions of organic compounds in a glass jar in a secondary containment tray.

9.2.2.1. Keep solutions that are not contaminated with PCBs segregated from those that are PCB-contaminated.

9.2.2.2. Label the jar with a hazardous waste label and a label indicating its use for waste containing organic compounds.

9.2.2.3. Open the jar only for the period of time necessary to add vials.

9.2.2.4 Cap the jar when full, and keep in the secondary containment tray pending pickup by the Waste Management group.

9.2.2.5. Label a new jar for future use.

9.3. Waste pickup.

9.3.1. Request pickup by the Waste Management group of a full bag, can, or jar of waste contaminated with organic compounds using the current Chemical Waste Disposal Request (CWDR) form. The current Waste Profile Request Form (WRPF) that describes the waste is referenced on the CWDR.

9.3.2. The Waste Management group picks up the waste for disposal according to Laboratory policy.

10. Source Materials

10.1 "Hazardous and Mixed Waste," Administrative Requirement 10-3, in *Environment, Safety, and Health Manual*, Los Alamos National Laboratory Manual, Chapter 1 (most recent edition).

GROSS GAMMA ON SOIL — QC SAMPLE PREPARATION

Analyte: Gross gamma	**Method No.:** QCR153
Matrix: Sand	**Spike Range:** 5-15 pCi/g
Procedure: Gamma-ray spectrometry	**Accuracy and Precision:** 100% ± 5.4% RSD
Effective Date: 03/02/92	**Authors:** Nancy L. Koski Margaret A. Gautier

SAFETY NOTE: Before beginning this procedure, read all of the Material Safety Data Sheets for the chemicals listed in Sec. 5. Read Sec. 4.3 of the EM-9 Safety Manual for information on personal protective clothing and equipment. Read Sec. 9 of this procedure and Source Materials 10.2 and 10.3 for proper waste disposal practices.

1. Principle of Method

1.1 Cesium-137 is used as a representative gamma emitter. To determine the gross gamma concentration of the QC sample, use only the fraction of gamma radiation emitted at energy levels exceeding the lower energy threshold of the analytical method used to measure the QC sample.

1.2. Sand is spiked with a gross gamma standard. The sand is used in place of soil as the QC matrix for gross gamma analysis by gamma-ray spectrometry.

1.3. QC samples are submitted for analysis with each analytical batch and are analyzed along with the unknown samples using the same analytical procedure.

1.4. Because the method of analysis is nondestructive, the QC samples can be reused providing the gross gamma concentration is periodically decayed.

2. Accuracy and Precision

2.1. The propagated error on QC preparation is based on the calibration error of the standard and on the error associated with use of the pipette and of the balance. A relative standard deviation (RSD) of 5.4% at the 1σ level has been calculated for the calibration, spiking, and weighing process based on the following function:

$$D = \frac{M1 \times M2}{M3} ,$$

where D = calculated result,
M1 = calibration error,
M2 = spiking error, and
M3 = weighing error.

2.1.1. Calculate relative variance using the following equation.

$$R_M^2 = \frac{\sigma^2}{\overline{X}^2} ,$$

where R^2_M = relative variance,
M = $M_1 \ldots M_n$ (variable),
σ^2 = variance (std dev^2), and
$\overline{X}$ = mean value of each variable (M).

2.1.2. Calculate percent relative standard deviation using the following equation.

$$SD_T = \sqrt{R_{M1}^2 + R_{M2}^2 + R_{M3}^2} \times 100 ,$$

where SD_T = relative standard deviation (% error),
R^2_{M1} = relative variance of standard,
R^2_{M2} = relative variance of pipette,
R^2_{M3} = relative variance of balance, and
100 = factor to convert to percentage.

2.2. Analysis by gamma-ray spectrometry of QC samples prepared during 1992 and 1993 using this procedure (N = 9) gave a mean recovery of 118% ± 39% at the 1σ level.

3. Collection and Storage of Samples

3.1. Spiked QC samples are stored at room temperature pending analysis.

4. Apparatus

4.1. Bottles: 500-mL, high-density polyethylene.

4.2. Balance: 200-g minimum capacity, 0.1-g accuracy.

4.3. Vortex mixer.

4.4. Spatula.

4.5. Auto-pipette: 1000-μL, Rainin or equivalent.

4.6. Pipette tips: disposable.

4.7. Pipettes: 2-, 3-, 4-, and 5-mL, class A, volumetric.

4.8. Heat lamp.

4.9. Labels printed with QC sample numbers.

5. Reagents

5.1. Sand. A clean, dry 100-g aliquot is required for each sample.

5.2. A suitable sand does not contain the analyte of interest and presents few interferences to the analytical method.

NOTE: Surface soils have been contaminated with radionuclides as a result of the use and testing of nuclear weapons. A suitable blank soil for this procedure would have been collected before World War II or would be collected from a deep well or other excavation where radioactive contamination is not likely to have occurred. Before use, a representative aliquot of soil is analyzed to determine if it will provide a suitably blank matrix.

6. Calibration and Standards

6.1. QC samples are spiked with a ^{137}Cs standard prepared in 1 M HCl at a concentration of approximately 350 pCi/mL. The gross gamma concentration of the standard is calculated from the ^{137}Cs concentration. See Step 8.1.

6.2. When they are available, certified primary standards should be diluted to make standards at the desired concentration.

6.3. Standard solutions which are not made from certified primary standards should be calibrated against an appropriate certified standard.

6.4. The ^{137}Cs standard should be calibrated against a National Institute of Standards and Technology (NIST) certified ^{137}Cs Standard Reference Material (SRM) solution, such as NIST SRM 4233-B, containing 19 μg of high-purity cesium chloride per gram in 1 M HCl. The standards should be recalibrated yearly using gamma spectrometry. Record all data in the QC Laboratory notebook.

6.5. Decay the ^{137}Cs standards each year.

6.5.1. The half-life of ^{137}Cs is 30 y.

6.5.2. The following equation describes the rate of physical decay of radionuclides:

$$A_t = A_o e^{-\lambda t} ,$$

where A_t = the activity at time t,
A_o = the activity at t = 0,
e = the base of natural logarithms, and
λ = the decay constant, (ln 2)/$T_{1/2}$, where $T_{1/2}$ is the half-life.

7. Procedure

7.1. Prepare QC samples to equal at least 10% of the total number of samples to be analyzed. Periodically include a 100-g aliquot of the unspiked sand as a blank.

7.2. Calculate the gross gamma concentration of the ^{137}Cs standard by multiplying the ^{137}Cs concentration by the fraction of the total gamma radiation emitted by ^{137}Cs at energy levels exceeding the lower energy threshold of the analytical method used to measure the QC samples. If the lower energy threshold is 100 keV, only 0.851 of the total gamma radiation emitted by ^{137}Cs is at a higher energy level (662 keV). See Step 8.1.

7.3. Accurately weigh 100 g of sand into a 500-mL, high-density polyethylene bottle. Record the weight of the sand on the bottle for reference by the analyst.

7.4. Spike an aliquot of gross gamma standard onto the sand to reach a gross gamma concentration in the desired spike range. Be careful to wet only the sand and not the container walls.

7.5. Dry the spiked sand under a heat lamp. Periodically mix the sand with a vortex mixer until all large clumps are broken up and the sand is dry.

7.6. Cap the bottle and label it with a QC sample number.

7.7. Record QC standard information, sample number, sample description, spike amount, concentration, uncertainty, and all calculations in the QC Laboratory notebook and in the CVS and CVD data bases on the VAX.

8. Calculations

8.1. Calculate the gross gamma concentration of a ^{137}Cs standard using the following example.

8.1.1. If the lower energy threshold of the analytical method used to measure the QC samples is 100 keV, only 0.851 of the gamma radiation emitted by ^{137}Cs is at an energy level (662 keV) exceeding the lower energy threshold and may be used to determine gross gamma concentration.

8.1.2. A standard with a ^{137}Cs concentration of 350 pCi/mL has a gross gamma concentration with energy levels exceeding 100 keV of 297.8 pCi/mL.

$$\left(\frac{350\ \text{pCi}}{1\ \text{mL}}\right)(0.851) = 297.8\ \text{pCi/mL}\ .$$

8.2. Calculate the gross gamma concentration of the QC sample as in the following example.

8.2.1. If 3 mL of a 297.8 pCi/mL gross gamma standard is used to spike 100.0 g of sand, the gross gamma concentration in the sand will be 8.9 pCi/g.

$$\frac{\left(\frac{297.8\ \text{pCi}}{1\ \text{mL}}\right) 3\ \text{mL}}{100.0\ \text{g}} = 8.9\ \text{pCi/g}\ .$$

Multiply the result by the RSD calculated in Step 2.1 to obtain the uncertainty.

8.2.2. Record the concentration of gross gamma in the QC sample as pCi/g.

9. Proper Waste Disposal Practices

9.1. Liquid waste.

9.1. Dispose of radioactively contaminated liquid waste in a sink specifically approved for the disposal of aqueous radioactive waste and inorganic acids and bases.

9.2. Solid waste.

9.2.1. Accumulate radioactively contaminated solid waste, such as paper wipes, glass or plastic pipettes, plastic cups, and incorrectly spiked QC samples, in a covered metal can lined with a plastic bag and keep it segregated from nonradioactive solid waste.

9.2.2. Label the can to indicate its use for radioactively contaminated waste.

9.2.3. Open the can only for the time necessary to add waste.

9.2.4. When the plastic bag is full, seal it with tape, remove it from the can, and identify it as radioactively contaminated waste.

9.2.5. Put a new plastic bag into the waste can for continued use.

9.2.6. Place the sealed bag into a cardboard box lined with a plastic bag and labeled to indicate its use for radioactively contaminated waste.

9.2.7. When the cardboard box is full, seal the plastic bag liner and the box.

9.2.8. Mark the box as radioactively contaminated compactable waste and reference the current Waste Profile Request form (WPRF) describing the waste in the box on the outside of the box.

9.2.9. Line a new box with a plastic bag and label it for continued use.

9.2.10. Complete the current Radioactive Solid Waste Record (RSWD) form describing the full, sealed box of waste. Reference the current WPRF number on the RSWD.

9.2.11. The outside of the full box is surveyed for radioactive contamination by a radiation protection technician. Record the results of the survey on the RSWD.

9.2.12. Submit the completed RSWD and a copy of the WPRF to the Waste Management group for approval.

9.3. Waste pickup.

9.3.1. After the RSWD describing the full box of solid waste has been approved by the Waste Management group, request pickup of the box by the contractor approved for the transportation of radioactively contaminated waste. A written job order may be required to request pickup of waste.

9.3.2. The RSWD and a copy of the associated WPRF accompany the full box.

9.3.3. The waste is disposed of according to Laboratory policy.

10. Source Materials

10.1. National Institute of Standards and Technology, "Certificate of Analysis for Standard Reference Material 4233-B, Cesium-137 Burn-up Standard" Washington, DC, November 1979).

10.2. "Low-Level Radioactive Solid Waste," Administrative Requirement 10-2, in *Environment, Safety, and Health Manual*, Los Alamos National Laboratory Manual, Chapter 1 (most recent edition).

10.3. "Hazardous and Mixed Waste," Administrative Requirement 10-3, in *Environment, Safety, and Health Manual*, Los Alamos National Laboratory Manual, Chapter 1 (most recent edition).

10.4. M. A. Gautier, N. L. Koski, E. A. Jones, and B. T. O' Malley "Quality Assurance for Health and Environmental Chemistry: 1992," Los Alamos National Laboratory report (in preparation).

GROSS GAMMA IN WATER — QC SAMPLE PREPARATION

Analyte: Gross gamma	**Method No.:** QCR155
Matrix: Water	**Spike Range:** 1000-1500 pCi/L
Procedure: Gamma-ray spectrometry	**Accuracy and Precision:** 100% ± 5.4 RSD
Effective Date: 03/02/92	**Authors:** Nancy L. Koski Margaret A. Gautier

SAFETY NOTE: Before beginning this procedure read all of the Material Safety Data Sheets for the chemicals listed in Sec. 5. Read Sec. 4.3 of the EM-9 Safety Manual for information on personal protective clothing and equipment. Read Sec. 9 of this procedure and Source Materials 10.2 and 10.3 for proper waste disposal practices.

1. Principle of Method

1.1. Cesium-137 is used as a representative gamma emitter. To determine the gross gamma concentration of the QC sample, use only the fraction of gamma radiation emitted at energy levels exceeding the lower energy threshold of the analytical method used to measure the QC sample.

1.2. Water is spiked with a gross gamma standard.

1.3. QC samples are submitted for analysis with each analytical batch and are analyzed along with the unknown samples using the same analytical procedure.

1.4. Because the method of analysis is nondestructive, the QC sample can be reused providing the gross gamma concentration is periodically decayed.

2. Accuracy and Precision

2.1. The propagated error on QC preparation is based on the calibration error of the standard and on the error associated with use of the pipette and of the volumetric flask. A relative standard deviation (RSD) of 5.4% at the 1σ level has been calculated for the calibration, spiking, and dilution process based on the following function:

$$D = \frac{M1 \times M2}{M3} ,$$

where D = calculated result,
M1 = calibration error,
M2 = spiking error, and
M3 = dilution error.

2.1.1. Calculate relative variance using the following equation.

$$R_M^2 = \frac{\sigma^2}{\overline{X}^2} ,$$

where R^2_M = relative variance,
M = $M_1 \ldots M_n$ (variable),
σ^2 = variance (std dev^2), and
$\overline{X}$ = mean value of each variable (M).

2.1.2. Calculate percent relative standard deviation using the following equation.

$$S_{D_T} = \sqrt{R_{M1}^2 + R_{M2}^2 + R_{M3}^2} \times 100 ,$$

where S_{D_T} = relative standard deviation (% error),
R^2_{M1} = relative variance of standard,
R^2_{M2} = relative variance of pipette,
R^2_{M3} = relative variance of volumetric flask, and
100 = factor to convert to percentage.

2.2. Analysis by gamma-ray spectrometry of QC samples prepared during 1992 and 1993 using this procedure (N = 24) gave a mean recovery of 108% ± 16% at the 1σ level.

3. Collection and Storage of Samples

3.1. Spiked QC samples are stored at room temperature pending analysis.

4. Apparatus

4.1. Volumetric flask: 500-mL, glass, class A.

4.2. Bottles: 500-mL, high-density polyethylene.

4.3. Auto-pipette: 1000-μL, Rainin or equivalent.

4.4. Pipette tips: disposable.

4.5. Pipettes: 2-mL, class A volumetric.

4.6. Labels printed with QC sample numbers.

5. Reagents

5.1. Nitric acid (concentrated, reagent-grade).

6. Calibration and Standards

6.1. QC samples are spiked with a ^{137}Cs standard prepared in 1 M HCl at a concentration of approximately 350 pCi/mL. The gross gamma concentration of the standard is calculated from the ^{137}Cs concentration. See Step 8.1.

6.2. When they are available, certified primary standards should be diluted to make standards at the desired concentration.

6.3. Standard solutions which are not made from certified primary standards should be calibrated against an appropriate certified standard.

6.4. The ^{137}Cs standard should be calibrated against a National Institute of Standards and Technology (NIST) certified ^{137}Cs Standard Reference Material (SRM) solution, such as NIST SRM 4233-B, containing 19 μg of high-purity cesium chloride per gram in 1 M HCl. The standards should be recalibrated yearly using gamma spectrometry. Record all data in the QC Laboratory notebook.

6.5. Decay the ^{137}Cs standards each year.

6.5.1. The half-life of ^{137}Cs is 30 y.

6.5.2. The following equation describes the rate of physical decay of radionuclides:

$$A_t = A_o e^{-\lambda t} \quad ,$$

where A_t = the activity at desired time t,
A_o = the activity at t = 0,
e = the base of natural logarithms, and
λ = the decay constant, $(\ln 2)/T_{1/2}$, where $T_{1/2}$ is the half-life.

7. Procedure

7.1. Prepare QC samples to equal at least 10% of the total number of samples to be analyzed. Periodically include a 500-mL aliquot of the unspiked acidified water as a blank.

7.2. Calculate the gross gamma concentration of the ^{137}Cs standard by multiplying the ^{137}Cs concentration by the fraction of the total gamma radiation emitted by ^{137}Cs at energy levels exceeding the lower energy threshold of the analytical method used to measure the QC samples. If the lower energy threshold is 100 keV, only 0.851 of the total gamma radiation emitted by ^{137}Cs is at a higher energy level (662 keV). See Step 8.1.

7.3. Place approximately 400 mL of distilled water into a 500-mL volumetric flask.

7.4. Add 1.25 mL of concentrated HNO_3 to the water in the flask to reach a pH of approximately 1.

7.5. Spike an aliquot of gross gamma standard into the flask to reach a gross gamma concentration in the desired spike range.

7.6. Fill the volumetric flask to volume with distilled water and mix by inverting.

7.7. Transfer the solution to a 500-mL, high-density polyethylene bottle, and label it with a QC sample number.

7.8. Record QC standard information, sample number, sample description, spike amount, concentration, uncertainty, and all calculations in the QC Laboratory notebook and in the CVS and CVD data bases on the VAX.

8. Calculations

8.1. Calculate the gross gamma concentration of a ^{137}Cs standard as in the following example.

8.1.1. If the lower energy threshold of the analytical method used to measure the QC samples is 100 keV, only 0.851 of the gamma radiation emitted by ^{137}Cs is at an energy level (662 keV) exceeding the lower threshold energy and may be used to determine gross gamma concentration.

8.1.2. A standard with a ^{137}Cs concentration of 350 pCi/mL has a gross gamma concentration with energy levels exceeding 100 keV of 297.8 pCi/mL.

$$\left(\frac{350\ \text{pCi}}{1\ \text{mL}}\right)(0.851) = 297.8\ \text{pCi/mL}\ .$$

8.2. Calculate the gross gamma concentration of the QC sample as in the following example.

8.2.1. If 2 mL of a 297.8-pCi/mL gross gamma standard is used to spike 500 mL of acidified water, the concentration of gross gamma in the acidified water will be 1191 pCi/L.

$$\frac{(297.8\ \text{pCi/mL})\ (2\ \text{mL})}{(500\ \text{mL})\ (1\ \text{L}/1000\ \text{mL})} = 1191\ \text{pCi/L}\ .$$

Multiply the result by the RSD calculated in Step 2.1 to obtain the uncertainty.

8.2.2. Record the concentration of gross gamma in the QC sample as nCi/L or pCi/L.

9. Proper Waste Disposal Practices

9.1. Liquid waste.

9.1. Dispose of radioactively contaminated liquid waste in a sink specifically approved for the disposal of aqueous radioactive waste and inorganic acids and bases.

9.2. Solid waste.

9.2.1. Accumulate radioactively contaminated solid waste, such as paper wipes, glass or plastic pipettes, plastic cups, and incorrectly spiked QC samples, in a covered metal can lined with a plastic bag and keep it segregated from nonradioactive solid waste.

9.2.2. Label the can to indicate its use for radioactively contaminated waste.

9.2.3. Open the can only for the time necessary to add waste.

9.2.4. When the plastic bag is full, seal it with tape, remove it from the can, and identify it as radioactively contaminated waste.

9.2.5. Put a new plastic bag into the waste can for continued use.

9.2.6. Place the sealed bag into a cardboard box lined with a plastic bag and labeled to indicate its use for radioactively contaminated waste.

9.2.7. When the cardboard box is full, seal the plastic bag liner and the box.

9.2.8. Mark the box as radioactively contaminated compactable waste and reference the current Waste Profile Request form (WPRF) describing the waste in the box on the outside of the box.

9.2.9. Line a new box with a plastic bag and label it for continued use.

9.2.10. Complete the current Radioactive Solid Waste Record (RSWD) form describing the full, sealed box of waste. Reference the current WPRF number on the RSWD.

9.2.11. The outside of the full box is surveyed for radioactive contamination by a radiation protection technician. Record the results of the survey on the RSWD.

9.2.12. Submit the completed RSWD and a copy of the WPRF to the Waste Management group for approval.

9.3. Waste pickup.

9.3.1. After the RSWD describing the full box of solid waste has been approved by the Waste Management group, request pickup of the box by the contractor approved for the transportation of radioactively contaminated waste. A written job order may be required to request pickup of waste.

9.3.2. The RSWD and a copy of the associated WPRF accompany the full box.

9.3.3. The waste is disposed of according to Laboratory policy.

10. Source Materials

10.1. National Institute of Standards and Technology, "Certificate of Analysis for Standard Reference Material 4233-B, Cesium-137 Burn-Up Standard" (Washington, DC, November 1979).

10.2. "Low-Level Radioactive Solid Waste," Administrative Requirement 10-2, in *Environment, Safety, and Health Manual*, Los Alamos National Laboratory Manual, Chapter 1 (most recent edition).

10.3. "Hazardous and Mixed Waste," Administrative Requirement 10-3, in *Environment, Safety, and Health Manual*, Los Alamos National Laboratory Manual, Chapter 1 (most recent edition).

10.4. M. A. Gautier, N. L. Koski, E. A. Jones, and B. T. O' Malley "Quality Assurance for Health and Environmental Chemistry: 1992, Los Alamos National Laboratory report (in preparation).

EPA AIR FILTER INTERCOMPARISON STUDY

Analyte: Alpha, beta, Sr-90, and Cs-137	**Method No.:** QCS100
Matrix: Air filter	
Procedure: Proportional counting for alpha and beta; gamma spectroscopy for Cs-137; radiochemical alpha spectrometry for Sr-90	
Effective Date: 01/01/85	**Authors:** Carolyn J. Macdonell Nancy L. Koski Margaret A. Gautier

SAFETY NOTE: Before beginning this procedure, read all of the Material Safety Data Sheets for the chemicals listed in Sec. 4. Read Sec. 4.3 of the EM-9 Safety Manual for information on personal protective clothing and equipment. Read Sec. 8 of this procedure for proper waste disposal practices.

1. Principle of Method

1.1. The United States Environmental Protection Agency (EPA) submits air filter intercomparison samples for alpha, beta, Sr-90, and Cs-137 analysis.

2. Collection and Storage of Samples

2.1. No dilution or aliquoting is required.

2.2. Samples are sealed with chain of custody tape and stored at room temperature pending analysis.

3. Apparatus

3.1. Chain of custody tape.

3.2. Labels printed with QC sample numbers.

4. Reagents

4.1. None required.

5. Procedure

5.1. Samples are received in individual filter cases.

5.2. Seal each case with chain of custody tape.

5.3. Label the cases with a QC sample number. The same QC sample number may be used for replicate samples.

5.4. Store the samples at room temperature pending analysis.

5.5. Distribute a copy of the EPA reporting sheet with the samples.

5.6. Record on the copy of the EPA reporting sheet distributed to the analyst that Cs-137 by gamma spectroscopy MUST be completed before the filters are digested for the other analyses.

5.7. Submit one QC sample (NEVER A BLANK), where available, matching the matrix of the intercomparison sample.

5.8. Establish a due date for the study, allowing sufficient time to record and mail the data to EPA to meet their stated deadline.

5.9. Record the Intercomparison Study identity, agency, sample numbers, sample descriptions, date received, date due, dilution and aliquoting information, matrix, and analyses requested in the QC Laboratory notebook, the External Quality Assurance Samples notebook, and the CVD database on the VAX.

5.10. Deliver the samples and all paperwork to the Sample Management section for distribution to the analysts.

6. Reporting of Results

6.1. When the analyses are completed, fill out the EPA report sheet. Make sure that the units of the reported results match those requested on the EPA report sheet.

6.2. Send the completed report form to EPA by the required EPA deadline.

6.3. Record the results and the date the report was sent to EPA in the External Quality Assurance Samples notebook.

7. Intercomparison Certified Values

7.1. When the certified values for the intercomparison samples are received from EPA, enter the values on the appropriate sheet in the External Quality Assurance Samples notebook.

7.2. Record the sample number, certified value name, certified results and uncertainties, certified value units, code, and N reference in the CVS database on the VAX.

7.3. File the completed report in the Quality Assurance and Data Management Section files and send a copy of the report to the section in which the analyses were performed.

8. Proper Waste Disposal Practices

8.1. No waste is generated by this procedure.

9. Source Materials

9.1. M. A. Gautier, E. S. Gladney, M. B. Phillips and B. T. O'Malley, "Quality Assurance for Health and Environmental Chemistry: 1987," Los Alamos National Laboratory report LA-11454-MS (1988).

9.2. M. A. Gautier, E. S. Gladney, M. B. Phillips, and B. T. O'Malley, "Quality Assurance for Health and Environmental Chemistry: 1988," Los Alamos National Laboratory report LA-11637-MS (1989).

9.3. M. A. Gautier, E. S. Gladney, N. L. Koski, M. B. Phillips, E. A. Jones, and B. T. O'Malley, "Quality Assurance for Health and Environmental Chemistry: 1989," Los Alamos National Laboratory report LA-11995-MS (1990).

9.4. M. A. Gautier, E. S. Gladney, N. L. Koski, E. A. Jones, and B. T. O'Malley, "Quality Assurance for Health and Environmental Chemistry: 1990," Los Alamos National Laboratory report LA-12208-MS (1991).

9.5. M. A. Gautier, E. S. Gladney, N. L. Koski, E. A. Jones, B. T. O'Malley, G. H. Brooks, and W. D. Moss, "Quality Assurance for Health and Environmental Chemistry: 1991," Los Alamos National Laboratory report LA-12436-MS (1992).

EPA GAMMA IN WATER INTERCOMPARISON STUDY

Analyte: Co-60, Zn-65, Ru-106, Cs-134, Cs-137, and Ba-133	**Method No.:** QCS130
Matrix: Water	
Procedure: Gamma spectrometry	
Effective Date: 01/01/85	**Authors:** Carolyn J. Macdonell Nancy L. Koski Margaret A. Gautier

SAFETY NOTE: Before beginning this procedure, read all of the Material Safety Data Sheets for the chemicals listed in Sec. 4. Read Sec. 4.3 of the EM-9 Safety Manual for information on personal protective clothing and equipment. Read Sec. 8 of this procedure and Source Materials 9.6 and 9.7 for proper waste disposal practices.

1. Principle of Method

1.1. The United States Environmental Protection Agency (EPA) submits water intercomparison samples for Co-60, Zn-65, Ru-106, Cs-134, Cs-137, and Ba-133 analysis. Samples are diluted according to supplied instructions.

2. Collection and Storage of Samples

2.1. Intercomparison samples are distributed in triplicate as 500-mL aliquots in 500-mL polyethylene bottles sealed with chain of custody tape.

2.2. Samples are stored at room temperature pending analysis.

3. Apparatus

3.1. Volumetric flask: 2-L, class A, glass.

3.2. Graduated cylinders: 100-, 250-, 500-, and 2000-mL.

3.3. Beaker: 5-L, polyethylene.

3.4. Bottles: 500-mL, high-density polyethylene.

3.5. Long glass stirring rod.

3.6. Teflon-coated magnetic stirring bar.

3.7. Magnetic stirring plate.

3.8. Chain of custody tape.

3.9. Labels printed with QC sample numbers.

4. Reagents

4.1. Hydrochloric acid (concentrated, reagent-grade).

5. Procedure

5.1. EPA instructions specify preparation of a 4-L aliquot of diluted sample.

5.1.1. This procedure descibes preparation of a 2-L aliquot.

5.1.2. If EPA instructions call for dilution of a 500-mL sample aliquot to 4 L, the same dilution is achieved by diluting a 250-mL sample aliquot to 2 L.

5.2. Prepare 2 L of 0.5 M hydrochloric acid.

5.2.1. Put approximately 1900 mL of distilled water into a 2000-mL graduated cylinder.

5.2.2. Add 85.5 mL of 12 M HCl to the water, using a 100-mL graduated cylinder.

5.2.3. Allow the acid to cool and dilute to 2000 mL with distilled water.

5.2.4. Mix the acid with a long stirring rod.

5.3. Transfer a 250-mL aliquot of the intercomparison sample to a 2-L volumetric flask, using a 250-mL graduated cylinder.

5.4. Dilute the sample to volume with 0.5 M HCl.

5.5. Mix by inversion.

5.6. Pour the 2-L sample aliquot into a 5-L beaker and set it on a stirring plate.

5.7. Place a Teflon-coated stirring bar in the beaker and stir the solution slowly for 20-30 min.

5.8. Using a graduated cylinder, measure 500-mL aliquots into each of three 500-mL high-density polyethylene bottles.

5.9. Dispose of excess sample as radioactively contaminated liquid waste.

5.10. Cap the bottles and seal with chain of custody tape.

5.11. Label each bottle with a QC sample number and store the samples at room temperature pending analysis. The same QC sample number may be used for replicate aliquots.

5.12. Write the sample collection date on the label for reference by the analyst.

5.13. Include one QC sample (NEVER A BLANK) prepared as described in procedure QCR130, Cesium-137 in Water—QC Sample Preparation.

5.14. Distribute a copy of the EPA instructions and reporting sheet with the samples.

5.15. Establish a due date for the analysis, allowing sufficient time to record and mail the data to EPA to meet their stated deadline.

5.16. Record the Intercomparison Study identity, agency, sample numbers, sample descriptions, date received, date due, dilution and aliquoting information, matrix, and analyses requested in the QC laboratory notebook, the External Quality Assurance Samples notebook, and the CVD database on the VAX.

5.17. Deliver the samples and all paperwork to the Sample Management section for distribution to the analysts.

6. Reporting of Results

6.1. When the analyses are completed, fill out the EPA report sheet. Make sure that the units of the reported results match those requested on the EPA report sheet.

6.2. Send the completed report form to EPA by the required EPA deadline.

6.3. Record the results and the date the report was sent to EPA in the External Quality Assurance Samples notebook.

7. Intercomparison Certified Values

7.1. When the certified values for the intercomparison samples are received from EPA, enter the values on the appropriate sheet in the External Quality Assurance Samples notebook.

7.2. Record the sample number, certified value name, certified results, and uncertainties, certified value units, code, and N reference in the CVS database on the VAX.

7.3. File the completed report in the Quality Assurance and Data Management section files and send a copy of the report to the section in which the analyses were performed.

8. Proper Waste Disposal Practices

8.1. Liquid waste.

8.1.1. Dispose of liquid radioactively contaminated waste in a sink specifically approved for the disposal of aqueous radioactive waste and inorganic acids and bases.

8.2. Solid waste.

8.2.1. Accumulate radioactively contaminated solid waste, such as paper wipes, glass or plastic pipettes, plastic cups, and incorrectly spiked QC samples, in a covered metal can lined with a plastic bag and keep it segregated from nonradioactive solid waste.

8.2.2. Label the can to indicate its use for radioactively contaminated waste.

8.2.3. Open the can only for the time necessary to add waste.

8.2.4. When the plastic bag is full, seal it with tape, remove it from the can, and identify it as radioactively contaminated waste.

8.2.5. Put a new plastic bag into the waste can for continued use.

8.2.6. Place the sealed bag into a cardboard box lined with a plastic bag and labeled to indicate its use for radioactively contaminated waste.

8.2.7. When the cardboard box is full, seal the plastic bag liner and the box.

8.2.8. Mark the box as radioactively contaminated compactable waste and reference the current Waste Profile Request form (WPRF) describing the waste in the box on the outside of the box.

8.2.9. Line a new box with a plastic bag and label it for continued use.

8.2.10. Complete the current Radioactive Solid Waste Disposal record (RSWD) form describing the full, sealed box of waste. Reference the current WPRF number on the RSWD.

8.2.11. The outside of the full box is surveyed for radioactive contamination by a radiation protection technician. Record the results of the survey on the RSWD.

8.2.12. Submit the completed RSWD and a copy of the WPRF to the Waste Management group for approval.

8.3. Waste pickup.

8.3.1. After the RSWD describing the full box of solid waste has been approved by the Waste Management group, request pickup of the box by the contractor approved for the transportation of radioactive contaminated waste. A written job order may be required to request pickup of the waste.

8.3.2. The RSWD and a copy of the associated WPRF accompany the full box.

8.3.3. The waste is disposed of according to Laboratory policy.

9. Source Materials

9.1. M. A. Gautier, E. S. Gladney, M. B. Phillips, and B. T. O'Malley, "Quality Assurance for Health and Environmental Chemistry: 1987," Los Alamos National Laboratory report LA-11454-MS (1988).

9.2. M. A. Gautier, E. S. Gladney, M. B. Phillips, and B. T. O'Malley, "Quality Assurance for Health and Environmental Chemistry: 1988," Los Alamos National Laboratory report LA-11637-MS (1989).

9.3. M. A. Gautier, E. S. Gladney, N. L. Koski, M. B. Phillips, E. A. Jones, and B. T. O'Malley, "Quality Assurance for Health and Environmental Chemistry: 1989," Los Alamos National Laboratory report LA-11995-MS (1990).

9.4. M. A. Gautier, E. S. Gladney, N. L. Koski, E. A. Jones, and B. T. O'Malley, "Quality Assurance for Health and Environmental Chemistry: 1990," Los Alamos National Laboratory report LA-12208-MS (1991).

9.5. M. A. Gautier, E. S. Gladney, N. L. Koski, E. A. Jones, B. T. O'Malley, G. H. Brooks, and W. D. Moss, "Quality Assurance for Health and Environmental Chemistry: 1991," Los Alamos National Laboratory report LA-12436-MS (1992).

9.6. "Low-Level Radioactive Solid Waste," Administrative Requirement 10-2, in *Environment, Safety, and Health Manual*, Los Alamos National Laboratory Manual, Chapter 1 (most recent edition).

9.7. "Hazardous and Mixed Waste," Administrative Requirement 10-3, in *Environment, Safety, and Health Manual*, Los Alamos National Laboratory Manual, Chapter 1 (most recent edition).

EPA GROSS ALPHA AND BETA IN WATER INTERCOMPARISON STUDY

Analyte: Gross alpha and beta	**Method No.:** QCS140
Matrix: Water	
Procedure: Proportional counting	
Effective Date: 01/01/85	**Authors:** Carolyn J. Macdonell Nancy L. Koski Margaret A. Gautier

SAFETY NOTE: Before beginning this procedure, read all of the Material Safety Data Sheets for the chemicals listed in Sec. 4. Read Sec. 4.3 of the EM-9 Safety Manual for information on personal protective clothing and equipment. Read Sec. 8 of this procedure and Source Materials 9.6 and 9.7 for proper waste disposal practices.

1. Principle of Method

1.1. The United States Environmental Protection Agency (EPA) submits water intercomparison samples for gross alpha and gross beta analysis. Samples are diluted according to supplied instructions.

2. Collection and Storage of Samples

2.1. Intercomparison samples are distributed in triplicate as 900-mL aliquots in 1000-mL beakers covered with plastic wrap and sealed with chain of custody tape.

2.2. Samples are stored at room temperature pending analysis.

3. Apparatus

3.1. Volumetric flasks: 1- and 2-L, class A, glass.

3.2. Graduated cylinders: 25-, 250-, 1000-, and 2000-mL.

3.3. Beaker: 5-L, polyethylene.

3.4. Beakers: 1000-mL, glass.

3.5. Long glass stirring rod.

3.6. Teflon-coated magnetic stirring bars.

3.7. Magnetic stirring plate.

3.8. Plastic wrap.

3.9. Chain of custody tape.

3.10. Labels printed with QC sample numbers.

4. Reagents

4.1. Nitric acid (concentrated, reagent-grade).

5. Procedure

5.1. EPA instructions specify preparation of a 4-L aliquot of diluted sample.

5.1.1. This procedure describes preparation of one 2-L and one 1-L aliquot.

5.1.2. If EPA instructions call for dilution of a 500-mL sample aliquot to 4-L, the same dilution is achieved by diluting a 250-mL sample aliquot to 2 L or a 125-mL sample aliquot to 1 L.

5.2. Add a Teflon-coated stirring bar to the 1-quart container of concentrated sample and stir the solution for approximately 10 min to redissolve any precipitates and ensure homogeneity of the sample.

5.3. Preparation of the 2-L aliquot.

5.3.1. Prepare 2 L of 0.1 M nitric acid.

5.3.1.1. Put approximately 1950 mL of distilled water into a 2000-mL graduated cylinder.

5.3.1.2. Add 12.8 mL of 16 M HNO_3 to the water, using a 25-mL graduated cylinder.

5.3.1.3. Allow the acid to cool and dilute to 2000 mL with distilled water.

5.3.1.4. Mix the acid with a long glass stirring rod.

5.3.2. Transfer a 250-mL aliquot of the intercomparison sample into a 2-L volumetric flask using a 250-mL graduated cylinder.

5.3.3. Dilute the sample to volume with 0.1 M HNO_3.

5.3.4. Mix by inversion.

5.4. Preparation of the 1-L aliquot.

5.4.1. Prepare 1 L of 0.1 M nitric acid.

5.4.1.1. Put approximately 990 mL of distilled water into a 1000-mL graduated cylinder.

5.4.1.2. Add 6.4 mL of 16 M HNO_3 to the water, using a 25-mL graduated cylinder.

5.4.1.3. Allow the acid to cool and dilute to 1000 mL with distilled water.

5.4.1.4. Mix the acid with a long glass stirring rod.

5.4.2. Transfer a 125-mL aliquot of the intercomparison sample into a 1-L volumetric flask using a 250-mL graduated cylinder.

5.4.3. Dilute the sample to volume with 0.1 M HNO_3.

5.4.4. Mix by inversion.

5.5. Combine the 2-L and the 1-L sample aliquots in a 5-L beaker and set it on a stirring plate.

5.6. Place a Teflon-coated stirring bar in the beaker and stir the solution slowly for approximately 10 min.

5.7. Using a graduated cylinder, measure 900-mL aliquots into each of three 1000-mL beakers.

5.8. Dispose of excess sample as radioactively contaminated liquid waste.

5.9. Cover each beaker with plastic wrap and seal with chain of custody tape.

5.10. Label each beaker with a QC sample number and store the samples at room temperature pending analysis. The same QC sample number may be used for replicate aliquots.

5.11. Include one QC sample (NEVER A BLANK), prepared as described in procedure QCR150, Gross Alpha and Gross Beta in Water—QC Sample Preparation.

5.12. Distribute a copy of the EPA instructions and reporting sheet with the samples.

5.13. Establish a due date for the analysis, allowing sufficient time to record and mail data to EPA to meet their stated deadline.

5.14. Record the Intercomparison Study identity, agency, sample numbers, sample descriptions, date received, date due, dilution and aliquoting information, matrix, and analysis requested in the QC Laboratory notebook, the External Quality Assurance notebook, and the CVD database on the VAX.

5.15. Deliver the samples and all paperwork to the Sample Management section for distribution to the analysts.

6. Reporting of Results

6.1. When the analyses are completed, fill out the EPA report sheet. Make sure that the units of the reported results match those requested on the EPA report sheet.

6.2. Send the completed report form to EPA by the required EPA deadline.

6.3. Record the results and the date the report was sent to EPA in the External Quality Assurance Samples notebook.

7. Intercomparison Certified Values

7.1. When the certified values for the intercomparison samples are received from EPA, enter the values on the appropriate sheet in the External Quality Assurance Samples notebook.

7.2. Record the sample number, certified value name, certified results, and uncertainties, certified value units, code, and N reference in the CVS database on the VAX.

7.3. File the completed report in the Quality Assurance and Data Management section files and send a copy of the report to the section in which the analyses were performed.

8. Proper Waste Disposal Practices

8.1. Liquid waste.

8.1.1. Dispose of radioactively contaminated liquid waste in a sink specifically approved for the disposal of aqueous radioactive waste and inorganic acids and bases.

8.2. Solid waste.

8.2.1. Accumulate radioactively contaminated solid waste, such as paper wipes, glass or plastic pipettes, plastic cups, and incorrectly spiked QC samples, in a covered metal can lined with a plastic bag and keep it segregated from nonradioactive solid waste.

8.2.2. Label the can to indicate its use for radioactively contaminated waste.

8.2.3. Open the can only for the time necessary to add waste.

8.2.4. When the plastic bag is full, seal it with tape, remove it from the can, and identify it as radioactively contaminated waste.

8.2.5. Put a new plastic bag into the waste can for continued use.

8.2.6. Place the sealed bag into a cardboard box lined with a plastic bag and labeled to indicate its use for radioactively contaminated waste.

8.2.7. When the cardboard box is full, seal the plastic bag liner and the box.

8.2.8. Mark the box as radioactively contaminated compactable waste and reference the current Waste Profile Request form (WPRF) describing the waste in the box on the outside of the box.

8.2.9. Line a new box with a plastic bag and label it for continued use.

8.2.10. Complete the current Radioactive Solid Waste Disposal record (RSWD) form describing the full, sealed box of waste. Reference the current WPRF number on the RSWD.

8.2.11. The outside of the full box is surveyed for radioactive contamination by a radiation protection technician. Record the results of the survey on the RSWD.

8.2.12. Submit the completed RSWD and a copy of the WPRF to the Waste Management group for approval.

8.3. Waste pickup.

8.3.1. After the RSWD describing the full box of solid waste has been approved by the Waste Management group, request pickup of the box by the contractor approved for the transportation of radioactively contaminated waste. A written job order may be required to request pickup of the waste.

8.3.2. The RSWD and a copy of the associated WPRF accompany the full box.

8.3.3. The waste is disposed of according to Laboratory policy.

9. Source Materials

9.1. M. A. Gautier, E. S. Gladney, M. B. Phillips, and B. T. O'Malley, "Quality Assurance for Health and Environmental Chemistry: 1987," Los Alamos National Laboratory report LA-11454-MS (1988).

9.2. M. A. Gautier, E. S. Gladney, M. B. Phillips, and B. T. O'Malley, "Quality Assurance for Health and Environmental Chemistry: 1988," Los Alamos National Laboratory report LA-11637-MS (1989).

9.3. M. A. Gautier, E. S. Gladney, N. L. Koski, M. B. Phillips, E. A. Jones, and B. T. O'Malley, "Quality Assurance for Health and Environmental Chemistry: 1989," Los Alamos National Laboratory report LA-11995-MS (1990).

9.4. M. A. Gautier, E. S. Gladney, N. L. Koski, E. A. Jones, and B. T. O'Malley, "Quality Assurance for Health and Environmental Chemistry: 1990," Los Alamos National Laboratory report LA-12208-MS (1991).

9.5. M. A. Gautier, E. S. Gladney, N. L. Koski, E. A. Jones, B. T. O'Malley, G. H. Brooks, and W. D. Moss, "Quality Assurance for Health and Environmental Chemistry: 1991," Los Alamos National Laboratory report LA-12436-MS (1992).

9.6. "Low-Level Radioactive Solid Waste," Administrative Requirement 10-2, in *Environment, Safety, and Health Manual*, Los Alamos National Laboratory Manual, Chapter 1 (most recent edition).

9.7. "Hazardous and Mixed Waste," Administrative Requirement 10-3, in *Environment, Safety, and Health Manual*, Los Alamos National Laboratory Manual, Chapter 1 (most recent edition).

EPA PERFORMANCE EVALUATION STUDY

Analyte: Sample A: gross alpha, Ra-226, and U
Sample B: gross beta, Sr-90, Cs-134, Cs-137, and Co-60

Method No.: QCS150

Matrix: Water

Procedure: Proportional counting for gross alpha and gross beta; gamma spectroscopy for Cs-134, Cs-137, and Co-60; radiochemical alpha spectrometry for Sr-90 and Ra-226; and inductively coupled plasma mass spectrometry for U

Effective Date: 01/01/85

Authors: Carolyn J. Macdonell
Nancy L. Koski
Margaret A. Gautier

SAFETY NOTE: Before beginning this procedure, read all of the Material Safety Data Sheets for the chemicals listed in Sec. 4. Read Sec. 4.3 of the EM-9 Safety Manual for information on personal protective clothing and equipment. Read Sec. 8 of this procedure and Source Materials 9.6 and 9.7 for proper waste disposal practices.

1. Principle of Method

1.1. The United States Environmental Protection Agency (EPA) submits two water intercomparison samples. Sample A includes analyses for gross alpha, Ra-226, Ra-228, and U. Sample B includes analyses for gross beta, Sr-89, Sr-90, Cs-134, Cs-137, and Co-60. Samples are diluted according to supplied instructions.

1.2. Ra-228 and Sr-89 are not analyzed for by EM-9.

2. Collection and Storage of Samples

2.1. Triplicate 900-mL aliquots for gross alpha, Ra-226, and gross beta analyses are distributed in 1000-mL beakers. The beakers are covered with plastic wrap and sealed with chain of custody tape.

2.2. Triplicate 500-mL aliquots for Sr-90 analysis are distributed in 600-mL beakers. The beakers are covered with plastic wrap and sealed with chain of custody tape.

2.3. Triplicate 100-mL aliquots for U analysis are distributed in 125-mL polyethylene bottles. The bottles are sealed with chain of custody tape.

2.4. One 1-L aliquot for Cs-134, Cs-137, and Co-60 analysis is distributed in a 1-L Marinelli beaker. The beaker is sealed with chain of custody tape.

2.5. Samples are stored at room temperature pending analysis.

3. Apparatus

3.1. Volumetric flask: 2-L, class A, glass.

3.2. Graduated cylinders: 25-, 250-, 500-, 1000-, 2000-mL.

3.3. Beaker: 5-L, polyethylene.

3.4. Beaker: 1-L, polyethylene Marinelli.

3.5. Beakers: 600- and 1000-mL, glass.

3.6. Bottles: 125-mL, high-density polyethylene.

3.7. Long glass stirring rod.

3.8. Teflon-coated magnetic stirring bars.

3.9. Magnetic stirring plate.

3.10. Plastic wrap.

3.11. Chain of custody tape.

3.12. Labels printed with QC sample numbers.

4. Reagents

4.1. Nitric acid (concentrated, reagent-grade).

5. Procedure

5.1. EPA instructions specify preparation of a 4-L aliquot of diluted sample.

5.1.1. This procedure describes preparation of three 2-L aliquots.

5.1.2. If EPA instructions call for dilution of a 250-mL sample aliquot to 4-L the same dilution is achieved by diluting a 125-mL sample aliquot to 2 L.

5.2. Preparation of the 2-L aliquots of sample A.

5.2.1. Add a Teflon-coated stirring bar to the 1-quart container of concentrated sample A and stir the solution for approximately 10 min to redissolve any precipitates and ensure homogeneity of the sample.

5.2.2. Prepare 2 L of 0.1 M nitric acid.

5.2.2.1. Put approximately 1950 mL of distilled water into a 2000-mL graduated cylinder.

5.2.2.2. Add 12.8 mL of 16 M HNO_3 to the water, using a 25-mL graduated cylinder.

5.2.2.3. Allow the acid to cool and dilute to 2000 mL with distilled water.

5.2.2.4. Mix the acid with a long glass stirring rod.

5.2.3. Transfer a 125-mL aliquot of intercomparison sample A into a 2-L volumetric flask using a 250-mL graduated cylinder.

5.2.4. Dilute the sample to volume with 0.1 M HNO_3.

5.2.5. Mix by inversion.

5.2.6. Pour the 2-L sample aliquot into a 5-L beaker.

5.2.7. Repeat Steps 5.2.2 to 5.2.5.

5.2.8. Combine the second 2-L sample aliquot with the first and set the beaker on a stirring plate.

5.2.9. Place a Teflon-coated stirring bar in the beaker and stir the solution slowly for approximately 10 min.

5.2.10. Using a graduated cylinder, measure 900-mL aliquots into each of three 1000-mL beakers for gross alpha analysis.

5.2.11. Cover each beaker with plastic wrap and seal with chain of custody tape.

5.2.12. Repeat Steps 5.2.2 to 5.2.5.

5.2.13. Combine the additional 2-L sample with the sample remaining in the 5-L beaker.

5.2.14. Place a Teflon-coated stirring bar in the beaker and slowly stir the solution for approximately 10 min.

5.2.15. Using a graduated cylinder, measure 900-mL aliquots into each of three 1000-mL beakers for Ra-226 analysis.

5.2.16. Cover each beaker with plastic wrap and seal with chain of custody tape.

5.2.17. Using a graduated cylinder, measure 100-mL aliquots into each of three 125-mL polyethylene bottles for U analysis.

5.2.18. Seal each bottle with chain of custody tape.

5.2.19. Dispose of the excess sample as radioactively contaminated liquid waste.

5.3. Preparation of the 2-L aliquots of sample B.

5.3.1. Add a Teflon-coated stirring bar to the 1-quart container of concentrated sample B and stir the solution for approximately 10 min to redissolve any precipitates and ensure homogeneity of the sample.

5.3.2. Prepare 2 L of 0.1 M nitric acid.

5.3.2.1 Put approximately 1950 mL of distilled water into a 2000-mL graduated cylinder.

5.3.2.2. Add 12.8 mL of 16 M HNO_3 to the water, using a 25-mL graduated cylinder.

5.3.2.3. Allow the acid to cool and dilute to 2000 mL with distilled water.

5.3.2.4. Mix the acid with a long glass stirring rod.

5.3.3. Transfer a 125-mL aliquot of intercomparison sample B into a 2-L volumetric flask using a 250-mL graduated cylinder.

5.3.4. Dilute the sample to volume with 0.1 M HNO_3.

5.3.5. Mix by inversion.

5.3.6. Pour the 2-L sample aliquot into a 5-L beaker.

5.3.7. Repeat Steps 5.3.2 to 5.3.5.

5.3.8. Combine the second 2-L sample aliquot with the first and set the beaker on a stirring plate.

5.3.9. Place a Teflon-coated stirring bar in the beaker and slowly stir the solution for approximately 10 min.

5.3.10. Using a graduated cylinder, measure 900-mL aliquots into each of three 1000-mL beakers for gross beta analysis.

5.3.11. Cover each beaker with plastic wrap and seal with chain of custody tape.

5.3.12. Repeat Steps 5.3.2 to 5.3.5.

5.3.13. Combine the additional 2 L of sample with the sample remaining in the 5-L beaker.

5.3.14. Place a Teflon-coated stirring bar in the beaker and slowly stir the solution for approximately 10 min.

5.3.15. Using a graduated cylinder, measure 500-mL aliquots into each of three 600-mL beakers for Sr-90 analysis.

5.3.16. Cover each beaker with plastic wrap and seal with chain of custody tape.

5.3.17. Measure a 1-L aliquot using a graduated cylinder into a 1-L Marinelli beaker for Cs-134, Cs-137, and Co-60 analysis.

5.3.18. Seal the Marinelli beaker with chain of custody tape.

5.3.19. Dispose of excess sample as radioactively contaminated liquid waste.

5.4. Label each beaker and bottle with a QC sample number and store the samples at room temperature pending analysis. The same QC sample number may be used for replicate aliquots.

5.5. Include QC samples (NEVER A BLANK) prepared as described in the following procedures: QCR150, Gross Alpha and Gross Beta in Water—QC Sample Preparation; QCR130, Cesium-137 in Water—QC Sample Preparation; QCR220, Radium-226 in Water—QC Sample Preparation; QCR240, Strontium-90 in Water—QC Sample Preparation; and QCI170, Trace Elements in Nitric Acid—QC Sample Preparation, for natural uranium analysis by ICPMS.

5.6. Distribute a copy of the EPA instructions and reporting sheet with the samples.

5.7. Establish a due date for the analyses, allowing sufficient time to record and mail data to EPA to meet their stated deadline.

5.8. Record the Intercomparison Study identity, agency, sample numbers, sample descriptions, date received, date due, dilution and aliquoting information, matrix, and analyses requested in the QC Laboratory notebook, the External Quality Assurance Samples notebook, and the CVD database on the VAX.

5.9. Deliver the samples and all paperwork to the Sample Management section for distribution to the analysts.

6. Reporting of Results

6.1. When the analyses are completed, fill out the EPA report sheet. Make sure that the units of the reported results match those requested on the EPA report sheet.

6.2. Send the completed report form to EPA by the required EPA deadline.

6.3. Record the results and the date the report was sent to EPA in the External Quality Assurance Samples notebook.

7. Intercomparison Certified Values

7.1. When the certified values for the intercomparison samples are received from EPA, enter the values on the appropriate sheet in the External Quality Assurance Samples notebook.

7.2. Record the sample number, certified value name, certified results and uncertainties, certified value units, code, and N reference in the CVS database on the VAX.

7.3. File the completed report in the Quality Assurance and Data Management section files and send a copy of the report to the section in which the analyses were performed.

8. Proper Waste Disposal Practices

8.1. Liquid waste.

8.1.1. Dispose of liquid radioactively contaminated waste in a sink specifically approved for the disposal of aqueous radioactive waste and inorganic acids and bases.

8.2. Solid waste.

8.2.1. Accumulate radioactively contaminated solid waste, such as paper wipes, glass or plastic pipettes, plastic cups, and incorrectly spiked QC samples, in a covered metal can lined with a plastic bag and keep it segregated from nonradioactive solid waste.

8.2.2. Label the can to indicate its use for radioactive contaminated waste.

8.2.3. Open the can only for the period of time necessary to add waste.

8.2.4. When the plastic bag is full, seal it with tape, remove it from the can, and identify it as radioactively contaminated waste.

8.2.5. Put a new plastic bag into the waste can for continued use.

8.2.6. Place the sealed bag into a cardboard box lined with a plastic bag and labeled to indicate its use for radioactively contaminated waste.

8.2.7. When the cardboard box is full, seal the plastic bag liner and the box.

8.2.8. Mark the box as radioactively contaminated compactable waste and reference the current Waste Profile Request form (WPRF) describing the waste in the box on the outside of the box.

8.2.9. Line a new box with a plastic bag and label it for continued use.

8.2.10. Complete the current Radioactive Solid Waste Disposal record (RSWD) form describing the full, sealed box of waste. Reference the current WPRF number on the RSWD.

8.2.11. The outside of the full box is surveyed for radioactive contamination by a radiation protection technician. Record the results of the survey on the RSWD.

8.2.12. Submit the completed RSWD and a copy of the WPRF to the Waste Management group for approval.

8.3. Waste pickup.

8.3.1. After the RSWD describing the full box of solid waste has been approved by the Waste Management group, request pickup of the box by the contractor approved for the transportation of radioactively contaminated waste. A written job order may be required to request pickup of the waste.

8.3.2. The RSWD and a copy of the associated WPRF accompany the full box.

8.3.3. The waste is disposed of according to Laboratory policy.

9. Source Materials

9.1. M. A. Gautier, E. S. Gladney, M. B. Phillips, and B. T. O'Malley, "Quality Assurance for Health and Environmental Chemistry: 1987," Los Alamos National Laboratory report LA-11454-MS (1988).

9.2. M. A. Gautier, E. S. Gladney, M. B. Phillips, and B. T. O'Malley, "Quality Assurance for Health and Environmental Chemistry: 1988," Los Alamos National Laboratory report LA-11637-MS (1989).

9.3. M. A. Gautier, E. S. Gladney, N. L. Koski, M. B. Phillips, E. A. Jones, and B. T. O'Malley, "Quality Assurance for Health and Environmental Chemistry: 1989," Los Alamos National Laboratory report LA-11995-MS (1990).

9.4. M. A. Gautier, E. S. Gladney, N. L. Koski, E. A. Jones, and B. T. O'Malley, "Quality Assurance for Health and Environmental Chemistry: 1990," Los Alamos National Laboratory report LA-12208-MS (1991).

9.5. M. A. Gautier, E. S. Gladney, N. L. Koski, E. A. Jones, B. T. O'Malley, G. H. Brooks, and W. D. Moss, "Quality Assurance for Health and Environmental Chemistry: 1991," Los Alamos National Laboratory report LA-12436-MS (1992).

9.6. "Low-Level Radioactive Solid Waste," Administrative Requirement 10-2, in *Environment, Safety, and Health Manual*, Los Alamos National Laboratory Manual, Chapter 1 (most recent edition).

9.7. "Hazardous and Mixed Waste," Administrative Requirement 10-3, in *Environment, Safety, and Health Manual*, Los Alamos National Laboratory Manual, Chapter 1 (most recent edition).

EPA PLUTONIUM IN WATER INTERCOMPARISON STUDY

Analyte: Plutonium	**Method No.:** QCS180
Matrix: Water	
Procedure: Radiochemical alpha spectrometry	
Effective Date: 01/01/85	**Authors:** Carolyn J. Macdonell Nancy L. Koski Margaret A. Gautier

SAFETY NOTE: Before beginning this procedure, read all of the Material Safety Data Sheets for the chemicals listed in Sec. 4. Read Sec. 4.3 of the EM-9 Safety Manual for information on personal protective clothing and equipment. Read Sec. 8 of this procedure and Source Materials 9.6 and 9.7 for proper waste disposal practices.

1. Principle of Method

1.1. The United States Environmental Protection Agency (EPA) submits water intercomparison samples for Pu-239 analysis. Samples are diluted according to supplied instructions.

2. Collection and Storage of Samples

2.1. Intercomparison samples are distributed in triplicate 300-mL and 500-mL aliquots for analysis by the radiochemical section, using tissue, bioassay, and environmental analytical procedures.

2.2. Samples are sealed with chain of custody tape and stored at room temperature pending analysis.

3. Apparatus

3.1. Volumetric flask: 2-L, class A, glass.

3.2. Graduated cylinders: 25-, 250-, 500-, and 2000-mL.

3.3. Beaker: 5-L, polyethylene.

3.4. Beakers: 400- and 600-mL, glass.

3.5. Long glass stirring rod.

3.6. Teflon-coated magnetic stirring bar.

3.7. Magnetic stirring plate.

3.8. Plastic wrap.

3.9. Chain of custody tape.

3.10. Labels printed with QC sample numbers.

4. Reagents

4.1. Hydrochloric acid (concentrated, reagent-grade).

5. Procedure

5.1. EPA instructions specify preparation of a 4-L aliquot of diluted sample.

5.1.1. This procedure describes preparation of two 2-L aliquots.

5.1.2. If EPA instructions call for dilution of a 500-mL sample aliquot to 4 L, the same dilution is achieved by diluting a 250-mL sample aliquot to 2 L.

5.2. Prepare 2 L of 3 M hydrochloric acid.

5.2.1. Put approximately 1400 mL of distilled water into a 2000-mL graduated cylinder.

5.2.2. Add 513 mL of 12 M HCl to the water using a 500-mL and a 25-mL graduated cylinder.

5.2.3. Allow the acid to cool and dilute to 2000 mL with distilled water.

5.2.4. Mix the acid with a long stirring rod.

5.3. Transfer a 250-mL aliquot of the intercomparison sample into a 2-L volumetric flask using a 250-mL graduated cylinder.

5.4. Dilute the sample to volume with 3 M HCl.

5.5. Mix by inversion.

5.6. Pour the 2-L sample aliquot into a 5-L beaker.

5.7. Repeat Steps 5.2 through 5.5.

5.8. Combine the second 2-L sample aliquot with the first and set the beaker on a stirring plate.

5.9. Place a Teflon-coated stirring bar in the beaker and slowly stir the solution for approximately 5 min.

5.10. Using a graduated cylinder, measure 300-mL aliquots into each of three 400-mL beakers for analysis using the tissue analytical procedure for Pu.

5.11. Using a graduated cylinder, measure 500-mL aliquots into each of three 600-mL beakers for analysis using the environmental analytical procedure for Pu.

5.12. Using a graduated cylinder, measure 500-mL aliquots into each of three 600-mL beakers for analysis using the bioassay analytical procedure for Pu.

5.13. Dispose of excess sample as radioactively contaminated liquid waste.

5.14. Cover each beaker with plastic wrap and seal with chain of custody tape.

5.15. Label each beaker with a QC sample number and store the samples at room temperature pending analysis. The same QC sample number may be used for replicate aliquots.

5.16. Include three QC samples (NEVER A BLANK) prepared as described in procedure QCR180, Plutonium and Americium in Water—QC Sample Preparation.

5.17. Distribute a copy of the EPA instructions and reporting sheet with the samples.

5.18. Establish a due date for the analysis, allowing sufficient time to record and mail the data to EPA to meet their stated deadline.

5.19. Record the Intercomparison Study identity, agency, sample numbers, sample descriptions, date received, date due, dilution and aliquoting information, matrix, and analysis requested in the QC laboratory notebook, the External Quality Assurance Samples notebook, and the CVD database on the VAX.

5.20. Deliver the samples and all paperwork to the Sample Management section for distribution to the analysts.

6. Reporting of Results

6.1. When the analyses are completed, fill out the EPA report sheet. Make sure that the units of the reported results match those requested on the EPA report sheet.

6.2. Send the completed report form to EPA by the required EPA deadline.

6.3. Record the results and the date the report was sent to EPA in the External Quality Assurance Samples notebook.

7. Intercomparison Certified Values

7.1. When the certified values for the intercomparison samples are received from EPA, enter the values on the appropriate sheet in the External Quality Assurance Samples notebook.

7.2. Record the sample number, certified value name, certified results and uncertainties, certified value units, code, and N reference in the CVS database on the VAX.

7.3. File the completed report in the Quality Assurance and Data Management section files and send a copy of the report to the section in which the analyses were performed.

8. Proper Waste Disposal Practices

8.1. Liquid waste.

8.1.1. Dispose of radioactively contaminated liquid waste in a sink specifically approved for the disposal of aqueous radioactive waste and inorganic acids and bases.

8.2. Solid waste.

8.2.1. Accumulate radioactively contaminated solid waste, such as paper wipes, glass or plastic pipettes, plastic cups, and incorrectly spiked QC samples, in a covered metal can lined with a plastic bag and keep it segregated from nonradioactive solid waste.

8.2.2. Label the can to indicate its use for radioactively contaminated waste.

8.2.3. Open the can only for the time necessary to add waste.

8.2.4. When the plastic bag is full, seal it with tape, remove it from the can, and identify it as radioactively contaminated waste.

8.2.5. Put a new plastic bag into the waste can for continued use.

8.2.6. Place the sealed bag into a cardboard box lined with a plastic bag and labeled to indicate its use for radioactively contaminated waste.

8.2.7. When the cardboard box is full, seal the plastic bag liner and the box.

8.2.8. Mark the box as radioactively contaminated compactable waste and reference the current Waste Profile Request form (WPRF) describing the waste in the box on the outside of the box.

8.2.9. Line a new box with a plastic bag and label it for continued use.

8.2.10. Complete the current Radioactive Solid Waste Disposal record (RSWD) form describing the full, sealed box of waste. Reference the current WPRF number on the RSWD.

8.2.11. The outside of the full box is surveyed for radioactive contamination by a radiation protection technician. Record the results of the survey on the RSWD.

8.2.12. Submit the completed RSWD and a copy of the WPRF to the Waste Management group for approval.

8.3. Waste pickup.

8.3.1. After the RSWD describing the full box of solid waste has been approved by the Waste Management group, request pickup of the box by the contractor approved for the transportation of radioactively contaminated waste. A written job order may be required to request pickup of the waste.

8.3.2. The RSWD and a copy of the associated WPRF accompany the full box.

8.3.3. The waste is disposed of according to Laboratory policy.

9. Source Materials

9.1. M. A. Gautier, E. S. Gladney, M. B. Phillips, and B. T. O'Malley, "Quality Assurance for Health and Environmental Chemistry: 1987," Los Alamos National Laboratory report LA-11454-MS (1988).

9.2. M. A. Gautier, E. S. Gladney, M. B. Phillips, and B. T. O'Malley, "Quality Assurance for Health and Environmental Chemistry: 1988," Los Alamos National Laboratory report LA-11637-MS (1989).

9.3. M. A. Gautier, E. S. Gladney, N. L. Koski, M. B. Phillips, E. A. Jones, and B. T. O'Malley, "Quality Assurance for Health and Environmental Chemistry: 1989," Los Alamos National Laboratory report LA-11995-MS (1990).

9.4. M. A. Gautier, E. S. Gladney, N. L. Koski, E. A. Jones, and B. T. O'Malley, "Quality Assurance for Health and Environmental Chemistry: 1990," Los Alamos National Laboratory report LA-12208-MS (1991).

9.5. M. A. Gautier, E. S. Gladney, N. L. Koski, E. A. Jones, B. T. O'Malley, G. H. Brooks, and W. D. Moss, "Quality Assurance for Health and Environmental Chemistry: 1991," Los Alamos National Laboratory report LA-12436-MS (1992).

9.6. "Low-Level Radioactive Solid Waste," Administrative Requirement 10-2, in *Environment, Safety, and Health Manual*, Los Alamos National Laboratory Manual, Chapter 1 (most recent edition).

9.7. "Hazardous and Mixed Waste," Administrative Requirement 10-3, in *Environment, Safety, and Health Manual*, Los Alamos National Laboratory Manual, Chapter 1 (most recent edition).

EPA RADIONUCLIDES IN MILK INTERCOMPARISON STUDY

Analyte: Sr-90	**Method No.:** QCS200
Matrix: Biological	
Procedure: Radiochemical alpha spectrometry	
Effective Date: 01/01/85	**Authors:** Carolyn J. Macdonell Nancy L. Koski Margaret A. Gautier

SAFETY NOTE: Before beginning this procedure, read all of the Material Safety Data Sheets for the chemicals listed in Sec. 4. Read Sec. 4.3 of the EM-9 Safety Manual for information on personal protective clothing and equipment. Read Sec. 8 of this procedure and Source Materials 9.6 and 9.7 for proper waste disposal practices.

1. Principle of Method

1.1. The United States Environmental Protection Agency (EPA) submits intercomparison samples for I-131, Cs-137, K-40, Sr-90, and Sr-89 analysis. Samples are diluted according to supplied instructions.

1.2. Sr-89 is not analyzed for by EM-9.

2. Collection and Storage of Samples

2.1. Intercomparison samples are distributed in triplicate as 500-mL aliquots in 600-mL beakers covered with plastic wrap and sealed with chain of custody tape.

2.2. Samples are stored at room temperature pending analysis.

3. Apparatus

3.1. Graduated cylinder: 500-mL.

3.2. Beakers: 600-mL, glass.

3.3. Plastic wrap.

3.4. Chain of custody tape.

3.5. Labels printed with QC sample numbers.

4. Reagents

4.1. None required.

5. Procedure

5.1. Using a graduated cylinder, measure 500-mL aliquots into each of three 600-mL beakers.

5.2. Reserve excess sample until analysis is completed; then dispose of it as radioactively contaminated liquid waste.

5.3. Cover each beaker with plastic wrap and seal with chain of custody tape.

5.4. Label each beaker with a QC sample number and store the samples at room temperature pending analysis. The same QC sample number may be used for replicate aliquots.

5.5. Include one QC sample (NEVER A BLANK) prepared as described in procedure QCR240, Strontium in Water—QC Sample Preparation.

5.6. Distribute a copy of the EPA instructions and reporting sheet with the samples.

5.7. Establish a due date for the analysis, allowing sufficient time to record and mail the data to EPA to meet their stated deadline.

5.8. Record the Intercomparison Study identity, agency, sample numbers, sample descriptions, date received, date due, dilution and aliquoting information, matrix, and analysis requested in the QC laboratory notebook, the External Quality Assurance Samples notebook, and the CVD database on the VAX.

5.9. Deliver the samples and all paperwork to the Sample Management section for distribution to the analysts.

6. Reporting of Results

6.1. When the analyses are completed, fill out the EPA result sheet. Make sure that the units of the reported results match those requested on the EPA report sheet.

6.2. Send the completed report form to EPA by the required EPA deadline.

6.3. Record the results and the date the report was sent to EPA in the External Quality Assurance Samples notebook.

7. Intercomparison Certified Values

7.1. When the certified values for the intercomparison samples are received from EPA, enter the values on the appropriate sheet in the External Quality Assurance Samples notebook.

7.2. Record the sample number, certified value name, certified results and uncertainties, certified value units, code, and N reference in the CVS data Base on the VAX.

7.3. File the completed report in the Quality Assurance and Data Management section files and send a copy of the report to the section in which the analyses were performed.

8. Proper Waste Disposal Practices

8.1. Liquid waste.

8.1.1. Dispose of radioactively contaminated liquid waste in a sink specifically approved for the disposal of aqueous radioactive waste and inorganic acids and bases.

8.2. Solid waste.

8.2.1. Accumulate radioactively contaminated solid waste, such as paper wipes, glass or plastic pipettes, plastic cups, and incorrectly spiked QC samples, in a covered metal can lined with a plastic bag and keep it segregated from nonradioactive solid waste.

8.2.2. Label the can to indicate its use for radioactively contaminated waste.

8.2.3. Open the can only for the time necessary to add waste.

8.2.4. When the plastic bag is full, seal it with tape, remove it from the can, and identify it as radioactively contaminated waste.

8.2.5. Put a new plastic bag into the waste can for continued use.

8.2.6. Place the sealed bag into a cardboard box lined with a plastic bag and labeled to indicate its use for radioactively contaminated waste.

8.2.7. When the cardboard box is full, seal the plastic bag liner and the box.

8.2.8. Mark the box as radioactively contaminated compactable waste and reference the current Waste Profile Request form (WPRF) describing the waste in the box on the outside of the box.

8.2.9. Line a new box with a plastic bag and label it for continued use.

8.2.10. Complete the current Radioactive Solid Waste Disposal record (RSWD) form describing the full, sealed box of waste. Reference the current WPRF number on the RSWD.

8.2.11. The outside of the full box is surveyed for radioactive contamination by a radiation protection technician. Record the results of the survey on the RSWD.

8.2.12. Submit the completed RSWD and a copy of the WPRF to the Waste Management group for approval.

8.3. Waste pickup.

8.3.1. After the RSWD describing the full box of solid waste has been approved by the Waste Management group, request pickup of the box by the contractor approved for the transportation of radioactive contaminated waste. A written job order may be required to request pickup of the waste.

8.3.2. The RSWD and a copy of the associated WPRF accompany the full box.

8.3.3. The waste is disposed of according to Laboratory policy.

9. Source Materials

9.1. M. A. Gautier, E. S. Gladney, M. B. Phillips, and B. T. O'Malley, "Quality Assurance for Health and Environmental Chemistry: 1987," Los Alamos National Laboratory report LA-11454-MS (1988).

9.2. M. A. Gautier, E. S. Gladney, M. B. Phillips, and B. T. O'Malley, "Quality Assurance for Health and Environmental Chemistry: 1988," Los Alamos National Laboratory report LA-11637-MS (1989).

9.3. M. A. Gautier, E. S. Gladney, N. L. Koski, M. B. Phillips, E. A. Jones, and B. T. O'Malley, "Quality Assurance for Health and Environmental Chemistry: 1989," Los Alamos National Laboratory report LA-11995-MS (1990).

9.4. M. A. Gautier, E. S. Gladney, N. L. Koski, E. A. Jones, and B. T. O'Malley, "Quality Assurance for Health and Environmental Chemistry: 1990," Los Alamos National Laboratory report LA-12208-MS (1991).

9.5. M. A. Gautier, E. S. Gladney, N. L. Koski, E. A. Jones, B. T. O'Malley, G. H. Brooks, and W. D. Moss, "Quality Assurance for Health and Environmental Chemistry: 1991," Los Alamos National Laboratory report LA-12436-MS (1992).

9.6. "Low-Level Radioactive Solid Waste," Administrative Requirement 10-2, in *Environment, Safety, and Health Manual*, Los Alamos National Laboratory Manual, Chapter 1 (most recent edition).

9.7. "Hazardous and Mixed Waste," Administrative Requirement 10-3, in *Environment, Safety, and Health Manual*, Los Alamos National Laboratory Manual, Chapter 1 (most recent edition).

EPA RADIUM IN WATER INTERCOMPARISON STUDY

Analyte: Radium-226	**Method No.:** QCS210
Matrix: Water	
Procedure: Radiochemical alpha spectrometry	
Effective Date: 01/01/85	**Authors:** Carolyn J. Macdonell Nancy L. Koski Margaret A. Gautier

SAFETY NOTE: Before beginning this procedure, read all of the Material Safety Data Sheets for the chemicals listed in Sec. 4. Read Sec. 4.3 of the EM-9 Safety Manual for information on personal protective clothing and equipment. Read Sec. 8 of this procedure and Source Materials 9.6 and 9.7 for proper waste disposal practices.

1. Principle of Method

1.1. The United States Environmental Protection Agency (EPA) submits water intercomparison samples for Ra-226 and Ra-228 analysis. Samples are diluted according to supplied instructions.

1.2. Ra-228 is not analyzed for by EM-9.

2. Collection and Storage of Samples

2.1. Intercomparison samples are distributed in triplicate as 900-mL aliquots in 1000-mL beakers covered with plastic wrap and sealed with chain of custody tape.

2.2. Samples are stored at room temperature pending analysis.

3. Apparatus

3.1. Volumetric flasks: 1- and 2-L, class A, glass.

3.2. Graduated cylinders: 100-, 250-, 1000-, and 2000-mL.

3.3. Beaker: 5-L, polyethylene.

3.4. Beakers: 1000-mL, glass.

3.5. Long glass stirring rod.

3.6. Teflon-coated magnetic stirring bar.

3.7. Magnetic stirring plate.

3.8. Plastic wrap.

3.9. Chain of custody tape.

3.10. Labels printed with QC sample numbers.

4. Reagents

4.1. Hydrochloric acid (concentrated, reagent-grade).

5. Procedure

5.1. EPA instructions specify preparation of a 4-L aliquot of diluted sample.

5.1.1. This procedure describes preparation of one 2-L and one 1-L aliquot.

5.1.2. If EPA instructions call for dilution of a 500-mL sample aliquot to 4 L, the same dilution is achieved by diluting a 250-mL aliquot to 2 L or a 125-mL aliquot to 1 L.

5.2. Preparation of the 2-L aliquot.

5.2.1. Prepare 2 L of 0.5 M hydrochloric acid.

5.2.1.1. Put approximately 1900 mL of distilled water into a 2000-mL graduated cylinder.

5.2.1.2. Add 85.5 mL of 12 M HCl to the water, using a 100-mL graduated cylinder.

5.2.1.3. Allow the acid to cool and dilute to 2000 mL with distilled water.

5.2.1.4. Mix the acid with a long stirring rod.

5.2.2. Transfer a 250-mL aliquot of the intercomparison sample into a 2-L volumetric flask, using a 250-mL graduated cylinder.

5.2.3. Dilute the sample to volume with 0.5 M HCl.

5.2.4. Mix by inversion.

5.3. Preparation of the 1-L aliquot.

5.3.1. Prepare 1 L of 0.5 M hydrochloric acid.

5.3.1.1. Put approximately 900 mL of distilled water into a 1000-mL graduated cylinder.

5.3.1.2. Add 42.75 mL of 12 M HCl to the water, using a 100-mL graduated cylinder.

5.3.1.3. Allow the acid to cool and dilute to 1000 mL with distilled water.

5.3.1.4. Mix the acid with a long glass stirring rod.

5.3.2. Transfer a 125-mL aliquot of the intercomparison sample into a 1-L volumetric flask using a 250-mL graduated cylinder.

5.3.3. Dilute the sample to volume with 0.5 M HCl.

5.3.4. Mix by inversion.

5.4. Combine the 2-L and the 1-L sample aliquots in a 5-L beaker and set it on a stirring plate.

5.5. Place a Teflon-coated stirring bar in the beaker and slowly stir the solution for 20-30 min.

5.6. Measure 900-mL aliquots using a graduated cylinder into each of three 1000-mL beakers.

5.7. Dispose of the excess sample as radioactively contaminated liquid waste.

5.8. Cover each beaker with plastic wrap and seal with chain of custody tape.

5.9. Label each beaker with a sample number and store the samples at room temperature pending analysis. The same sample number may be used for replicate aliquots.

5.10. Include one QC sample (NEVER A BLANK) prepared as described in procedure QCR220, Radium-226 in Water—QC Sample Preparation.

5.11. Distribute a copy of the EPA instructions and reporting sheet with the samples.

5.12. Establish a due date for the analysis, allowing sufficient time to record and mail the data to EPA to meet their stated deadline.

5.13. Record the Intercomparison Study identity, agency, sample numbers, sample descriptions, date received, date due, dilution and aliquoting information, matrix, and analysis requested in the QC Laboratory notebook, the External Quality Assurance Samples notebook, and the CVD database on the VAX.

5.14. Deliver the samples and all paperwork to the Sample Management section for distribution to the analysts.

6. Reporting of Results

6.1. When the analyses are completed, fill out the EPA report sheet. Make sure that the units of the reported results match those requested on the EPA report sheet.

6.2. Send the completed report form to EPA by the required EPA deadline.

6.3. Record the results and the date the report was sent to EPA in the External Quality Assurance Samples notebook.

7. Intercomparison Certified Values

7.1. When the certified values for the intercomparison samples are received from EPA, enter the values on the appropriate sheet in the External Quality Assurance Samples notebook.

7.2. Record the sample number, certified value name, certified results and uncertainties, certified value units, code, and N reference in the CVS database on the VAX.

7.3. File the completed report in the Quality Assurance and Data Management section files and send a copy of the report to the section in which the analyses were performed.

8. Proper Waste Disposal Practices

8.1. Liquid waste.

8.1.1. Dispose of radioactively contaminated liquid waste in a sink specifically approved for the disposal of aqueous radioactive waste and inorganic acids and bases.

8.2. Solid waste.

8.2.1. Accumulate radioactively contaminated solid waste, such as paper wipes, glass or plastic pipettes, plastic cups, and incorrectly spiked QC samples, in a covered metal can lined with a plastic bag and keep it segregated from nonradioactive solid waste.

8.2.2. Label the can to indicate its use for radioactively contaminated waste.

8.2.3. Open the can only for the time necessary to add waste.

8.2.4. When the plastic bag is full, seal it with tape, remove it from the can, and identify it as radioactively contaminated waste.

8.2.5. Put a new plastic bag into the waste can for continued use.

8.2.6. Place the sealed bag into a cardboard box lined with a plastic bag and labeled to indicate its use for radioactively contaminated waste.

8.2.7. When the cardboard box is full, seal the plastic bag liner and the box.

8.2.8. Mark the box as radioactively contaminated compactable waste and reference the current Waste Profile Request form (WPRF) describing the waste in the box on the outside of the box.

8.2.9. Line a new box with a plastic bag and label it for continued use.

8.2.10. Complete the current Radioactive Solid Waste Disposal record (RSWD) form describing the full, sealed box of waste. Reference the current WPRF number on the RSWD.

8.2.11. The outside of the full box is surveyed for radioactive contamination by a radiation protection technician. Record the results of the survey on the RSWD.

8.2.12. Submit the completed RSWD and a copy of the WPRF to the Waste Management group for approval.

8.3. Waste pickup.

8.3.1. After the RSWD describing the full box of solid waste has been approved by the Waste Management group, request pickup of the box by the contractor approved for the transportation of radioactive contaminated waste. A written job order may be required to request pickup of the waste.

8.3.2. The RSWD and a copy of the associated WPRF accompany the full box.

8.3.3. The waste is disposed of according to Laboratory policy.

9. Source Materials

9.1. M. A. Gautier, E. S. Gladney, M. B. Phillips and B. T. O'Malley, "Quality Assurance for Health and Environmental Chemistry: 1987," Los Alamos National Laboratory report LA-11454-MS (1988).

9.2. M. A. Gautier, E. S. Gladney, M. B. Phillips, and B. T. O'Malley, "Quality Assurance for Health and Environmental Chemistry: 1988," Los Alamos National Laboratory report LA-11637-MS (1989).

9.3. M. A. Gautier, E. S. Gladney, N. L. Koski, M. B. Phillips, E. A. Jones, and B. T. O'Malley, "Quality Assurance for Health and Environmental Chemistry: 1989," Los Alamos National Laboratory report LA-11995-MS (1990).

9.4. M. A. Gautier, E. S. Gladney, N. L. Koski, E. A. Jones, and B. T. O'Malley, "Quality Assurance for Health and Environmental Chemistry: 1990," Los Alamos National Laboratory report LA-12208-MS (1991).

9.5. M. A. Gautier, E. S. Gladney, N. L. Koski, E. A. Jones, B. T. O'Malley, G. H. Brooks, and W. D. Moss, "Quality Assurance for Health and Environmental Chemistry: 1991," Los Alamos National Laboratory report LA-12436-MS (1992).

9.6. "Low-Level Radioactive Solid Waste," Administrative Requirement 10-2, in *Environment, Safety, and Health Manual*, Los Alamos National Laboratory Manual, Chapter 1 (most recent edition).

9.7. "Hazardous and Mixed Waste," Administrative Requirement 10-3, in *Environment, Safety, and Health Manual*, Los Alamos National Laboratory Manual, Chapter 1 (most recent edition).

EPA STRONTIUM IN WATER INTERCOMPARISON STUDY

Analyte: Sr-90	**Method No.:** QCS220
Matrix: Water	
Procedure: Radiochemical alpha spectrometry	
Effective Date: 01/01/85	**Authors:** Carolyn J. Macdonell Nancy L. Koski Margaret A. Gautier

SAFETY NOTE: Before beginning this procedure, read all of the Material Safety Data Sheets for the chemicals listed in Sec. 4. Read Sec 4.3 of the EM-9 Safety Manual for information on personal protective clothing and equipment. Read Sec. 8 of this procedure and Source Materials 9.6 and 9.7 for proper waste disposal practices.

1. Principle of Method

1.1. The United States Environmental Protection Agency (EPA) submits water intercomparison samples for Sr-89 and Sr-90 analysis. Samples are diluted according to supplied instruction.

1.2. Sr-89 is not analyzed for by EM-9.

2. Collection and Storage of Samples

2.1. Intercomparison samples are distributed in triplicate as 500-mL aliquots in 600-mL beakers covered with plastic wrap and sealed with chain of custody tape.

2.2. Samples are stored at room temperature pending analysis.

3. Apparatus

3.1. Volumetric flask: 2-L, class A, glass.

3.2. Graduated cylinders: 100-, 250-, 500-, and 2000-mL.

3.3. Beaker: 5-L, polyethylene.

3.4. Beakers: 600-mL, glass.

3.5. Long glass stirring rod.

3.6. Teflon-coated magnetic stirring bar.

3.7. Magnetic stirring plate.

3.8. Plastic wrap.

3.9. Chain of custody tape.

3.10. Labels printed with QC sample numbers.

4. Reagents

4.1. Hydrochloric acid (concentrated, reagent-grade).

5. Procedure

5.1. EPA instructions specify preparation of a 4-L aliquot of diluted sample.

5.1.1. This procedure describes preparation of one 2-L aliquot.

5.1.2. If EPA instructions call for dilution of a 500-mL sample aliquot to 4 L, the same dilution is achieved by diluting a 250-mL sample aliquot to 2 L.

5.2. Prepare 2 L of 0.5 M hydrochloric acid.

5.2.1. Put approximately 1900 mL of distilled water into a 2000-mL graduated cylinder.

5.2.2. Add 85.5 mL of 12 M HCl to the water, using a 100-mL graduated cylinder.

5.2.3. Allow the acid to cool and dilute to 2000 mL with distilled water.

5.2.4. Mix the acid with a long stirring rod.

5.3. Transfer a 250-mL aliquot of the intercomparison sample into a 2-L volumetric flask, using a 250-mL graduated cylinder.

5.4. Dilute the sample to volume with 0.5 M HCl.

5.5. Mix by inversion.

5.6. Pour the 2-L sample aliquot into a 5-L beaker and set it on a stirring plate.

5.7. Place a Teflon-coated stirring bar in the beaker and stir the solution slowly for 20-30 min.

5.8. Using a graduated cylinder, measure 500-mL aliquots into each of three 600-mL beakers.

5.9. Dispose of excess sample as radioactively contaminated liquid waste.

5.10. Cover each beaker with plastic wrap and seal with chain of custody tape.

5.11. Label each beaker with a QC sample number and store the samples at room temperature pending analysis. The same QC sample number may be used for replicate aliquots.

5.12. Include one QC sample (NEVER A BLANK) prepared as described in procedure QCR240, Strontium-90 in Water—QC Sample Preparation.

5.13. Distribute a copy of the EPA instructions and reporting sheet with the samples.

5.14. Establish a due date for the analysis, allowing sufficient time to record and mail the data to EPA to meet their stated deadline.

5.15. Record the Intercomparison Study identity, agency, sample numbers, sample descriptions, date received, date due, dilution and aliquoting information, matrix, and analysis requested in the QC Laboratory notebook, the External Quality Assurance Samples notebook, and the CVD database on the VAX.

5.16. Deliver the samples and all paperwork to the Sample Management section for distribution to the analysts.

6. Reporting of Results

6.1. When the analyses are completed, fill out the EPA report sheet. Make sure that the units of the reported results match those requested on the EPA report sheet.

6.2. Send the completed report form to EPA by the required EPA deadline.

6.3. Record the results and the date the report was sent to EPA in the External Quality Assurance Samples notebook.

7. Intercomparison Certified Values

7.1. When the certified values for the intercomparison samples are received from EPA, enter the values on the appropriate sheet in the External Quality Assurance Samples notebook.

7.2. Record the sample number, certified value name, certified results and uncertainties, certified value units, code, and N reference in the CVS database on the VAX.

7.3. File the completed report in the Quality Assurance and Data Management section files and send a copy of the report to the section in which the analyses were performed.

8. Proper Waste Disposal Practices

8.1. Liquid waste.

8.1.1. Dispose of radioactively contaminated liquid waste in a sink specifically approved for the disposal of aqueous radioactive waste and inorganic acids and bases.

8.2. Solid waste.

8.2.1. Accumulate radioactively contaminated solid waste, such as paper wipes, glass or plastic pipettes, plastic cups, and incorrectly spiked QC samples, in a covered metal can lined with a plastic bag and keep it segregated from nonradioactive solid waste.

8.2.2. Label the can to indicate its use for radioactively contaminated waste.

8.2.3. Open the can only for the time necessary to add waste.

8.2.4. When the plastic bag is full, seal it with tape, remove it from the can, and identify it as radioactively contaminated waste.

8.2.5. Put a new plastic bag into the waste can for continued use.

8.2.6. Place the sealed bag into a cardboard box lined with a plastic bag and labeled to indicate its use for radioactively contaminated waste.

8.2.7. When the cardboard box is full, seal the plastic bag liner and the box.

8.2.8. Mark the box as radioactively contaminated compactable waste and reference the current Waste Profile Request form (WPRF) describing the waste in the box on the outside of the box.

8.2.9. Line a new box with a plastic bag and label it for continued use.

8.2.10. Complete the current Radioactive Solid Waste Disposal record (RSWD) form describing the full, sealed box of waste. Reference the current WPRF number on the RSWD.

8.2.11. The outside of the full box is surveyed for radioactive contamination by a radiation protection technician. Record the results of the survey on the RSWD.

8.2.12. Submit the completed RSWD and a copy of the WPRF to the Waste Management group for approval.

8.3. Waste pickup.

8.3.1. After the RSWD describing the full box of solid waste has been approved by the Waste Management group, request pickup of the box by the contractor approved for the transportation of radioactive contaminated waste. A written job order may be required to request pickup of the waste.

8.3.2. The RSWD and a copy of the associated WPRF accompany the full box.

8.3.3. The waste is disposed of according to Laboratory policy.

9. Source Materials

9.1. M. A. Gautier, E. S. Gladney, M. B. Phillips and B. T. O'Malley, "Quality Assurance for Health and Environmental Chemistry: 1987," Los Alamos National Laboratory report LA-11454-MS (1988).

9.2. M. A. Gautier, E. S. Gladney, M. B. Phillips, and B. T. O'Malley, "Quality Assurance for Health and Environmental Chemistry: 1988," Los Alamos National Laboratory report LA-11637-MS (1989).

9.3. M. A. Gautier, E. S. Gladney, N. L. Koski, M. B. Phillips, E. A. Jones, and B. T. O'Malley, "Quality Assurance for Health and Environmental Chemistry: 1989," Los Alamos National Laboratory report LA-11995-MS (1990).

9.4. M. A. Gautier, E. S. Gladney, N. L. Koski, E. A. Jones, and B. T. O'Malley, "Quality Assurance for Health and Environmental Chemistry: 1990," Los Alamos National Laboratory report LA-12208-MS (1991).

9.5. M. A. Gautier, E. S. Gladney, N. L. Koski, E. A. Jones, B. T. O'Malley, G. H. Brooks, and W. D. Moss, "Quality Assurance for Health and Environmental Chemistry: 1991," Los Alamos National Laboratory report LA-12436-MS (1992).

9.6. "Low-Level Radioactive Solid Waste," Administrative Requirement 10-2, in *Environment, Safety, and Health Manual*, Los Alamos National Laboratory Manual, Chapter 1 (most recent edition).

9.7. "Hazardous and Mixed Waste," Administrative Requirement 10-3, in *Environment, Safety, and Health Manual*, Los Alamos National Laboratory Manual, Chapter 1 (most recent edition).

EPA TRITIUM IN WATER INTERCOMPARISON STUDY

Analyte: Tritium	**Method No.:** QCS230
Matrix: Water	
Procedure: Liquid scintillation counting	
Effective Date: 01/01/85	**Authors:** Carolyn J. Macdonell Nancy L. Koski Margaret A. Gautier

SAFETY NOTE: Before beginning this procedure, read all of the Material Safety Data Sheets for the chemicals listed in Sec. 4. Read Sec. 4.3 of the EM-9 Safety Manual for information on personal protective clothing and equipment. Read Sec. 8 of this procedure for proper waste disposal practices.

1. Principle of Method

1.1. The United States Environmental Protection Agency (EPA) submits water intercomparison samples for tritium analysis.

2. Collection and Storage of Samples

2.1. No dilution or aliquoting is required.

2.2. Samples are stored at room temperature pending analysis.

3. Apparatus

3.1. Chain of custody tape.

3.2. Labels printed with QC sample numbers.

4. Reagents

4.1. None required.

5. Procedure

5.1. The tritium sample is received in a small bottle. A blank is received in a second bottle.

5.2. Seal the bottles with chain of custody tape.

5.3. Label the bottles with QC sample numbers. The same QC sample number may be used for replicate aliquots taken from the bottle by the analyst.

5.4. Store the samples at room temperature pending analysis.

5.5. Submit one QC sample ([NEVER A BLANK) prepared as described in procedure QCR270, Tritium in Water—QC Sample Preparation.

5.6. Distribute a copy of the EPA reporting sheet with the samples.

5.7. Establish a due date for the study, allowing sufficient time to record and mail the data to EPA to meet the their stated deadline.

5.8. Record the Intercomparison Study identity, agency, sample numbers, sample descriptions, date received, date due, dilution and aliquoting information, matrix, and analysis requested in the QC Laboratory notebook, the External Quality Assurance Samples notebook, and the CVD database on the VAX.

5.9. Deliver the samples and all paperwork to the Sample Management section for distribution to the analysts.

6. Reporting of Results

6.1. When the analyses are completed, fill out the EPA report sheet. Make sure that the units of the reported results match those requested on the EPA report sheet.

6.2. Send the completed report form to EPA by the required EPA deadline.

6.3. Record the results and the date the report was sent to EPA in the External Quality Assurance Samples notebook on the appropriate sheet.

7. Intercomparison Certified Values

7.1. When the certified values for the intercomparison samples are received from EPA, enter the values on the appropriate sheet in the External Quality Assurance Samples notebook.

8.2. Record the sample number, certified value name, certified results and uncertainties, certified value units, code, and N reference in the CVS database on the VAX.

8.3. File the completed report in the Quality Assurance and Data Management section files and send a copy of the report to the section in which the analyses were performed.

8. Proper Waste Disposal Practices

8.1. No radioactively contaminated waste or hazardous waste is generated using this procedure.

9. Source Materials

9.1. M. A. Gautier, E. S. Gladney, M. B. Phillips and B. T. O'Malley, "Quality Assurance for Health and Environmental Chemistry: 1987," Los Alamos National Laboratory report LA-11454-MS (1988).

9.2. M. A. Gautier, E. S. Gladney, M. B. Phillips, and B. T. O'Malley, "Quality Assurance for Health and Environmental Chemistry: 1988," Los Alamos National Laboratory report LA-11637-MS (1989).

9.3. M. A. Gautier, E. S. Gladney, N. L. Koski, M. B. Phillips, E. A. Jones, and B. T. O'Malley, "Quality Assurance for Health and Environmental Chemistry: 1989," Los Alamos National Laboratory report LA-11995-MS (1990).

9.4. M. A. Gautier, E. S. Gladney, N. L. Koski, E. A. Jones, and B. T. O'Malley, "Quality Assurance for Health and Environmental Chemistry: 1990," Los Alamos National Laboratory report LA-12208-MS (1991).

9.5. M. A. Gautier, E. S. Gladney, N. L. Koski, E. A. Jones, B. T. O'Malley, G. H. Brooks, and W. D. Moss, "Quality Assurance for Health and Environmental Chemistry: 1991," Los Alamos National Laboratory report LA-12436-MS (1992).

EPA URANIUM IN WATER INTERCOMPARISON STUDY

Analyte: Uranium	**Method No.:** QCS240
Matrix: Water	
Procedure: Radiochemical alpha spectrometry (RAS) for radiochemistry analysis; inductively coupled plasma mass spectrometry (ICPMS) for inorganic chemistry analysis	
Effective Date: 01/01/85	**Authors:** Carolyn J. Macdonell Nancy L. Koski Margaret A. Gautier

SAFETY NOTE: Before beginning this procedure, read all of the Material Safety Data Sheets for the chemicals listed in Sec. 4. Read Sec. 4.3 of the EM-9 Safety Manual for information on personal protective clothing and equipment. Read Sec. 8 of this procedure and Source Materials 9.6 and 9.7 for proper waste disposal practices.

1. Principle of Method

1.1. The United States Environmental Protection Agency (EPA) submits water intercomparison samples for uranium analysis. Samples are diluted according to supplied instructions.

2. Collection and Storage of Samples

2.1. Intercomparison samples for radiochemistry analysis are distributed in triplicate as 500-mL aliquots in 500-mL polyethylene bottles.

2.2. Intercomparison samples for inorganic chemistry analysis are distributed in triplicate as 100-mL aliquots in 125-mL polyethylene bottles.

2.3. Samples are stored at room temperature pending analysis.

3. Apparatus

3.1. Volumetric flask: 2-L, class A, glass.

3.2. Graduated cylinders: 100-, 250-, 500-, and 2000-mL.

3.3. Beaker: 5-L, polyethylene.

3.4. Bottles: 125- and 500-mL, high-density polyethylene.

3.5. Long glass stirring rod.

3.6. Teflon-coated magnetic stirring bar.

3.7. Magnetic stirring plate.

3.8. Auto-pipette: 1000-μL, Rainin or equivalent.

3.9. Pipette tips: disposable.

3.10. Chain of custody tape.

3.11. Labels printed with QC sample numbers.

4. Reagents

4.1. Hydrochloric acid (concentrated, reagent-grade).

4.2. Nitric acid (concentrated, reagent-grade).

5. Procedure

5.1. EPA instructions specify preparation of a 4-L aliquot of diluted sample.

5.1.1. This procedure describes preparation of one diluted 2-L aliquot and three undiluted 100-mL aliquots.

5.1.2. If EPA instructions call for dilution of a 500-mL sample aliquot to 4 L, the same dilution is achieved by diluting a 250-mL sample aliquot to 2 L.

5.2. Preparation of the 2-L aliquot.

5.2.1. Prepare 2 L of 0.5 M hydrochloric acid.

5.2.1.1. Put approximately 1900 mL of distilled water into a 2000-mL graduated cylinder.

5.2.1.2. Add 85.5 mL of 12 M HCl to the water, using a 100-mL graduated cylinder.

5.2.1.3. Allow the acid to cool and dilute to 2000 mL with distilled water.

5.2.1.4. Mix the acid with a long stirring rod.

5.2.2. Transfer a 250-mL aliquot of the intercomparison sample into a 2-L volumetric flask using a 250-mL graduated cylinder.

5.2.3. Dilute the sample to volume with 0.5 M HCl.

5.2.4. Mix by inversion.

5.2.5. Pour the 2-L sample aliquot into a 5-L beaker and set it on a stirring plate.

5.2.6. Place a Teflon-coated stirring bar in the beaker and slowly stir the solution for 20-30 min.

5.2.7. Using a graduated cylinder, measure 500-mL aliquots into each of three 500-mL high-density polyethylene bottles.

5.2.8. Dispose of the excess sample as radioactively contaminated liquid waste.

5.2.9. Cap the bottles and seal them with chain of custody tape.

5.2.10. Label each bottle with a sample number and store the samples at room temperature pending analysis. The same sample number may be used for replicate aliquots.

5.2.11. Include one QC sample (NEVER A BLANK) for the analysis of uranium in water by RAS.

5.3. Preparation of the undiluted aliquots.

5.3.1. Using a graduated cylinder, transfer a 100-mL aliquot of undiluted intercomparison sample to each of three 125-mL high-density polyethylene bottles.

5.3.2. Add 1 mL of concentrated nitric acid to each bottle using an autopipette.

5.3.3. Cap each bottle and seal with chain of custody tape.

5.3.4. Instruct the analyst to dilute the intercomparison sample before analysis, using a 1:8 dilution factor.

5.3.5. Label each bottle with a QC sample number and store the samples at room temperature pending analysis.

5.3.6. Include one Quality Control sample (NEVER A BLANK) for the analysis of uranium in water prepared as described in procedure

QCI170, Trace Elements in Nitric Acid—QC Sample Preparation, for natural uranium analysis by ICPMS.

5.4. Distribute a copy of the EPA instructions and reporting sheet with the samples.

5.5. Establish a due date for the analysis, allowing sufficient time to record and mail the data to EPA to meet their stated deadline.

5.6. Record the Intercomparison Study identity, agency, sample numbers, sample descriptions, date received, date due, dilution and aliquoting information, matrix, and analysis requested in the QC Laboratory notebook, the External Quality Assurance Samples notebook, and the CVD database on the VAX.

5.7. Deliver the samples and all paperwork to the Sample Management section for distribution to the analysts.

6. Reporting of Results

6.1. When the analyses are completed, fill out the EPA report sheet. Make sure that the units of the reported results match those requested on the EPA report sheet.

6.2. Send the completed report form to EPA by the required EPA deadline.

6.3. Record the results and the date the report was sent to EPA in the External Quality Assurance Samples notebook.

7. Intercomparison Certified Values

7.1. When the certified values for the intercomparison samples are received from EPA, enter the values on the appropriate sheet in the External Quality Assurance Samples notebook.

7.2. Record the sample number, certified value name, certified results and uncertainties, certified value units, code, and N reference in the CVS database on the VAX.

7.3. File the completed report in the Quality Assurance and Data Management section files and send a copy of the report to the section in which the analyses were performed.

8. Proper Waste Disposal Practices

8.1. Liquid waste.

8.1.1. Dispose of radioactively contaminated liquid waste in a sink specifically approved for the disposal of aqueous radioactive waste and inorganic acids and bases.

8.2. Solid waste.

8.2.1. Accumulate radioactively contaminated solid waste, such as paper wipes, glass or plastic pipettes, plastic cups, and incorrectly spiked QC samples, in a covered metal can lined with a plastic bag and keep it segregated from nonradioactive solid waste.

8.2.2. Label the can to indicate its use for radioactively contaminated waste.

8.2.3. Open the can only for the time necessary to add waste.

8.2.4. When the plastic bag is full, seal it with tape, remove it from the can, and identify it as radioactively contaminated waste.

8.2.5. Put a new plastic bag into the waste can for continued use.

8.2.6. Place the sealed bag into a cardboard box lined with a plastic bag and labeled to indicate its use for radioactively contaminated waste.

8.2.7. When the cardboard box is full, seal the plastic bag liner and the box.

8.2.8. Mark the box as radioactive contaminated compactable waste and reference the current Waste Profile Request form (WPRF) describing the waste in the box on the outside of the box.

8.2.9. Line a new box with a plastic bag and label it for continued use.

8.2.10. Complete the current Radioactive Solid Waste Disposal record (RSWD) form describing the full, sealed box of waste. Reference the current WPRF number on the RSWD.

8.2.11. The outside of the full box is surveyed for radioactive contamination by a radiation protection technician. Record the results of the survey on the RSWD.

8.2.12. Submit the completed RSWD and a copy of the WPRF to the Waste Management group for approval.

8.3. Waste pickup.

8.3.1. After the RSWD describing the full box of solid waste has been approved by the Waste Management group, request pickup of the box by the contractor approved for the transportation of radioactive contaminated waste. A written job order may be required to request pickup of the waste.

8.3.2. The RSWD and a copy of the associated WPRF accompany the full box.

8.3.3. The waste is disposed of according to Laboratory policy.

9. Source Materials

9.1. M. A. Gautier, E. S. Gladney, M. B. Phillips and B. T. O'Malley, "Quality Assurance for Health and Environmental Chemistry: 1987," Los Alamos National Laboratory report LA-11454-MS (1988).

9.2. M. A. Gautier, E. S. Gladney, M. B. Phillips, and B. T. O'Malley, "Quality Assurance for Health and Environmental Chemistry: 1988," Los Alamos National Laboratory report LA-11637-MS (1989).

9.3. M. A. Gautier, E. S. Gladney, N. L. Koski, M. B. Phillips, E. A. Jones, and B. T. O'Malley, "Quality Assurance for Health and Environmental Chemistry: 1989," Los Alamos National Laboratory report LA-11995-MS (1990).

9.4. M. A. Gautier, E. S. Gladney, N. L. Koski, E. A. Jones, and B. T. O'Malley, "Quality Assurance for Health and Environmental Chemistry: 1990," Los Alamos National Laboratory report LA-12208-MS (1991).

9.5. M. A. Gautier, E. S. Gladney, N. L. Koski, E. A. Jones, B. T. O'Malley, G. H. Brooks, and W. D. Moss, "Quality Assurance for Health and Environmental Chemistry: 1991," Los Alamos National Laboratory report LA-12436-MS (1992).

9.6. "Low-Level Radioactive Solid Waste," Administrative Requirement 10-2, in *Environment, Safety, and Health Manual*, Los Alamos National Laboratory Manual, Chapter 1 (most recent edition).

9.7. "Hazardous and Mixed Waste," Administrative Requirement 10-3, in *Environment, Safety, and Health Manual*, Los Alamos National Laboratory Manual, Chapter 1 (most recent edition).

*U.S. GOVERNMENT PRINTING OFFICE 1994-0-573-024/87065