SEPT 1994

9-12-94

0047 General

Environmental Restoration Standard Operating Procedures

Volume I

A Department of Energy environmental clean-up program

LIBRARY COPY

LIBRARY COPY

CONTROLLED COPY #42

Los Alamos
NATIONAL LABORATORY

12537

TK/TO

Los Alamos National Laboratory
Environmental Restoration Program

STANDARD OPERATING PROCEDURES

TABLE OF CONTENTS -VOLUME I

General Instructions	dated September 20, 1994
Master Distribution List	dated September 20, 1994
List of Superseded Documents	dated September 12, 1994

Procedure Numbers	Title
1.0	**GENERAL INSTRUCTIONS**
LANL-ER-SOP-01.01,R0	General Instructions for Field Investigations
LANL-ER-SOP-01.02,R0	Sample Containers and Preservation
LANL-ER-SOP-01.03,R1	Handling, Packaging, and Shipping of Samples
LANL-ER-SOP-01.04,R2	Sample Control and Field Documentation
LANL-ER-SOP-01.05,R0	Field Quality Control Samples
LANL-ER-SOP-01.06,R0	Management of RFI-Generated Waste
3.0	**RECONNAISSANCE/FIELD SURVEYS**
LANL-ER-SOP-03.01,R1	Land Surveying Procedures
LANL-ER-SOP-03.02,R1	General Surface Geophysics
LANL-ER-SOP-03.04,R0	Petrography
LANL-ER-SOP-03.05,R0	Determination of Volume Constituents in Thin Sections of Rocks
LANL-ER-SOP-03.06,R0	Fracture Characterization
LANL-ER-SOP-03.07,R0	Characterization of Lithologic Variation Within the Rock Outcrop of a Volcanic Field
LANL-ER-SOP-03.08,R0	Geomorphic Characterization
LANL-ER-SOP-03.09,R0	Geologic Mapping of Bedrock Units
LANL-ER-SOP-03.10,R0	Trenching and Logging
LANL-ER-SOP-03.12,R0	Field and Laboratory Notebook Documentation for Environmental Restoration Earth Science Studies

Procedure Numbers	Title
4.0	**DRILLING, EXCAVATING, SAMPLING AND LOGGING**
LANL-ER-SOP-04.01,R0	Drilling Methods and Drill Site Management
LANL-ER-SOP-04.04,R0	General Borehole Logging
5.0	**WELL INSTALLATION/DEVELOPMENT AND WATER SAMPLING TECHNIQUES**
LANL-ER-SOP-05.01,R0	Monitor Well Construction
LANL-ER-SOP-05.02,R0	Well Development
6.0	**SAMPLING TECHNIQUES**
LANL-ER-SOP-06.01,R0	Purging of Wells for Representative Sampling of Groundwater
LANL-ER-SOP-06.02,R0	Field Analytical Measurements of Groundwater Samples
LANL-ER-SOP-06.03,R0	Sampling for Volatile Organics
LANL-ER-SOP-06.04,R0	Sampling Commercial/Municipal/Domestic Wells
LANL-ER-SOP-06.05,R0	Soil Water Samples
LANL-ER-SOP-06.06.R0	Tensiometer (Soil Suction Monitor) Installation and Measurement
LANL-ER-SOP-06.09,R0	Spade and Scoop Method for Collection of Soil Samples
LANL-ER-SOP-06.10,R0	Hand Auger and Thin-Wall Tube Sampler
LANL-ER-SOP-06.11,R0	Stainless Steel Surface Soil Sampler
LANL-ER-SOP-06.13,R0	Surface Water Sampling
LANL-ER-SOP-06.14,R0	Sediment Material Collection
LANL-ER-SOP-06.15,R0	Coliwasa Sampler for Liquids and Slurries
LANL-ER-SOP-06.16,R0	Thief Sampler for Dry Powders or Granules
LANL-ER-SOP-06.17,R0	Trier Sampler for Sludges and Moist Powders or Granules
LANL-ER-SOP-06.18,R0	Collection of Sand, Packed Powder, or Granule Samples Using the Hand Auger
LANL-ER-SOP-06.19,R0	Weighted Bottle Sampler for Liquids and Slurries in Tanks
LANL-ER-SOP-06.21,R0	Volatile Organic Sampling Train
LANL-ER-SOP-06.22,R0	Canister Sampling for Organics EPA Method T0-14
LANL-ER-SOP-06.23,R0	Measurement of Gamma-Ray Fields Using a Sodium Iodide Detector
LANL-ER-SOP-06.24,R0	Sample Collection From Split-Spoon Samplers and Shelby Tube Samplers
LANL-ER-SOP-06.25,R0	Total Suspended Particulate Air Sampling
LANL-ER-SOP-06.26,R0	Core Barrel Sampling for Subsurface Earth Materials
LANL-ER-SOP-06.28,R0	RO-Chip Sampling of Porous Surfaces
LANL-ER-SOP-06.29,R0	Single Stage Sampling For Surface Water Run-Off

Los Alamos National Laboratory
Environmental Restoration Program

STANDARD OPERATING PROCEDURES

CONTENTS - VOLUME II

General Instructions	dated September 20, 1994
Master Distribution List	dated September 20, 1994
List of Superseded Documents	dated September 12, 1994

Procedure Numbers	Title
7.0	**SUBSURFACE HYDROGEOLOGICAL SITE CHARACTERIZATION**
LANL-ER-SOP-07.01,R0	Pressure Transducers
LANL-ER-SOP-07.02,R0	Fluid Level Measurements
LANL-ER-SOP-07.03,R0	Well Slug Tests
LANL-ER-SOP-07.04,R0	Aquifer Pumping Tests
9.0	**GEOCHEMISTRY**
LANL-ER-SOP-09.01,R0	Thin Section Preparation
LANL-ER-SOP-09.02,R0	Operating the Microprobe
LANL-ER-SOP-09.03,R0	Operation of the Siemens X-Ray Diffractometer
LANL-ER-SOP-09.04,R0	Calibration and Alignment of the Siemens Diffractometers
LANL-ER-SOP-09.05,R0	Clay Mineral Separation for X-Ray Diffraction Analysis
LANL-ER-SOP-09.06,R0	Zeolite Purification and Separation
LANL-ER-SOP-09.07,R0	Operating Instructions for ISI ModelDS-130 Scanning Electron Microscope and Tracor Northern Series II X-Ray Analyzer
LANL-ER-SOP-09.09.R0	Certification of Standards for Electron Microanalysis

Procedure Numbers	Title
10.0	**FIELD SCREENING TECHNIQUES**
LANL-ER-SOP-10.01,R0	Screening of PCB's in Soil
LANL-ER-SOP-10.04,R1	Fidler Instrument System
LANL-ER-SOP-10.05,R0	Field Analysis of Total Hydrocarbons Using The Hanby Method
LANL-ER-SOP--10.07,R0	RO-Field Monitoring for Surface and Volume Radioactivity levels
11.0	**GEOTECHNICAL ANALYSIS**
LANL-ER-SOP-11.01,R0	Measurement of Bulk Density, Dry Density, Water Content and Porosity in Soil
LANL-ER-SOP-11.02,R0	Particle Size Distribution of Soil/Rock Samples
LANL-ER-SOP-11.03,R0	Permeability of Granular Soils
LANL-ER-SOP-11.04,R0	Soil and Core pH
LANL-ER-SOP-11.05,R0	Total Organic Carbon
LANL-ER-SOP-11.06,R0	Cation-Exchange Capacity
12.0	**CURATORIAL MANAGEMENT ACTIVITIES**
LANL-ER-SOP-12.01,R0	Field Logging, Handling and Documentation of Borehole Materials
LANL-ER-SOP-12.02,R0	Transportation, Receipt, and Admittance of Borehole Samples for the Sample Management Facility
LANL-ER-SOP-12.03,R0	Acceptance of Non-Borehole Samples by the Sample by the Sample Management Facility
LANL-ER-SOP-12.04,R0	Physical Processing and Storage of Borehole Samples at the Sample Management Facility
LANL-ER-SOP-12.05,R0	Examination of Samples at the Sample Management Facility
14.0	**GROSS MEASUREMENTS OF RADIOACTIVITY IN SOILS**
LANL-ER-SOP-14.01,R0	Berthold Low Alpha and Beta Activity Counter Calibration, Quality Control, Detection Limit, and Use

LOS ALAMOS NATIONAL LABORATORY
ENVIRONMENTAL RESTORATION PROGRAM

STANDARD OPERATING PROCEDURES

GENERAL INSTRUCTIONS

1. Please read and familiarize yourself with the Purpose and Scope of each section and the Field Activity Flow Chart (Attachment A), located in LANL-ER-SOP-1.01,R0.

2. Ensure that the personnel you supervise have access to your manual or ensure that they are issued "controlled working copies" of appropriate procedures.

3. Follow the directions in the administrative procedure LANL-ER-AP-01.4, R0, Distribution of Controlled Documents Prepared for the Environmental Restoration Program, to request controlled working copies of procedures for your employees.

4. Follow the guidelines in the administrative procedure LANL-ER-AP-01.5,R0, Revision or Interim Change of Environmental Program Controlled Documents, to initiate interim changes or revisions to procedures.

5. Request unmarked copies of the Chain of Custody/Request for Analysis form located in LANL-ER-SOP-01.4, R1 by contacting John Miglio at CST-9, MS K484, 665-8742.

6. Request unmarked copies of all other SOP forms by contacting the Controlled Document Coordinator (Renee Archuleta) at EM/ER, MS M707, 665-6498.

7. **PLEASE return your manual** to the Document Control Coordinator for EM/ER, if you leave or are no longer conducting work for the ER Program.

8. Contact the Controlled Document Coordinator **before** you transfer your controlled manual to another person.

Los Alamos National Laboratory
Environmental Restoration Program

STANDARD OPERATING PROCEDURES

MASTER DISTRIBUTION LIST

Controlled Manual No.	Recipient Name	Group/Location
1.	Larry Maassen	ER, MS M992
2.	Returned	EM/ER, MS M992
3.	Jim Aldrich	EES-1, MS D462
4.	Roy Michelotti	CST-6, MS E525
5.	Ron Conrad	ESH-8, MS K490
6.	Inactive	
7.	Dorothy Hoard	CST-1, MS E525
8.	Gary Eller	CST-10, MS J534
9.	Tracy Glatzmaier	ER, MS M992
10.	Gene Gould	ESA-4, MS G787
11.	Cheryl Rofer	EES-1, MS D462
12.	Jim Noel	EM, MS M992
13.	Robert Gilkeson	ERM, MS M327
14.	Pat Longmire	CST-10, MS J534
15.	Brad Martin	CST-6, MS E525
16.	Al Ogard	INC-7, MS J514
17.	Allyn Pratt	EES-13, MS J521
18.	Larry Creamer	M7, MS P950
19.	Inactive	
20.	Sue Goff	EES-4, MS H865
21.	Marja Shaner	ER, MS M773
22.	John Miglio	CST-9 MS K484
23.	**Returned**	
24.	James M. Ray	ER (RPF), MS M707
25.	Bruce Gallaher	ESH-8, MS K490
26.	John Krueger	Weston, MS M992
27.	Stacy Ulrich	ERM, MS M327
28.	Robin Roybal	ER, MS M992
29.	Phil Fresquez	QESHA-8, MS K490
30.	Linda Ettinger	EES-5, MS D452
31.	Andrew Crowder	ERM, MS M327
32.	Carl Newton	EES-3, MS C335
33.	Garry Allen	CST-6, MS E525
34.	Helen Gram	ICF-Kaiser, MS M703

Controlled Manual No.	Recipient Name	Group/Location
35.	Elizabeth Kelly c/o L. Nonno	ER, MS M773
36.	Nancy Marusak	EES-5, MS D452
37.	Susan Alexander	ESH-5, MS K494
38.	Kathleen Armstrong	ER, MS M992
39.	Katherine Campbell	A-1, MS F600
40.	Charlie Wilson	ERM, MS M327
41.	Ted Taylor	DOE-LAAO, MS A316
42.	Barbara Driscoll	US EPA, Dallas, TX
43.	Greg Bayhurst	CST-10, MS J514
44.	Dave Bradbury	ER, MS M992
45.	Darril Bultman	ESA-4, MS G787
46.	Bart VandenPlas	ERM, MS M327
47.	A. Edward Norris	ER, MS M992
48.	Rebecca Brown	ERM, MS M327
49.	Tami Wiggins	ERM, MS M327
50.	Ted Taylor	DOE-LAAO, MS A316
51.	Dennis Armstrong	QESHA-8, MS K490
52.	Roy Bohn	ER, MS M992
53.	Jan Novak	EES-1, MS D462
54.	Dale Conover	Morrison Knudsen Corp.
55.	Steve Stellavato	EES-13, MS J521
56.	Donald Krier	EES-1, MS J577
57.	Larry Souza	ER, MS M992
58.	Sandy Roybal	ER, MS M992
59.	Douglas Pippin	ESA-4, MS G787
60.	John Williams	ERM, MS M327
61.	Richard Cordi	EES-13, MS J521
62.	Benny Martinez	CST-10, MS J514
63.	Kevin Walter	ERM, MS M327
64.	Max Maes	ESH-8, MS K498
65.	Ann White	ERM, MS M327
66.	Scott Cohen	ESH-8, MS K490
67.	Jeffrey Tucker	IT Corp.
68.	Jayne Bradley	ERM, MS M327
69.	Derek Faulk	ERM, MS M327
70	Lily Reese	ESH-14, MS C307
71	Carol White	EES-1; MS D462
72	Corinne P. Wilson	ICF KAISER; MS M703
73	Robert Gonzales	ER; MS M768
74	Lynn Kidman	ICF KAISER, MS M703
75	Patricia Tillery	ICF KAISER, MS M703
76	Jennifer a. Harris	ERM, MS M327

Controlled Manual No.	Recipient Name	Group/Location
77	Dennis L. Newell	ERM, MS M327
78	Rebecca Garnett	ERM, MS M327
79	Barbara Hoditschek	NMED
80	Dan Michaels	Neptune & Co.
81	Laural Shastri	ERM, MS M327
82	Danny Katzman	ERM, MS M327
83	Cleoves B. Martinez	LATA, MS M321
84	David Hickens	ER, MS M992
85	Viki A. Fry	ERM Golder, MS M327
86	Vince Trujillo	ESA-13, MS J577
87	Mike Henke	ESA-4, MS G787
88	Randy Mynard	ESA-4, MS G787
89	Gary McMath	Weston
90	Michelle Morgenstern	ERM Golder, MS M327
91	Cynthia Kruger	ERM Golder, MS M327
92	Elmer Velasquez	ESH-8, MS K490
93	Stephanie Cohen	ESH-8, MS K490
94	Bob Catherwood	ESA-4, MS G787

Transferred Manuals from Original Distribution 3/16/92

Manual No.	To	From
13	Robert Gilkeson	John Krueger
4	Roy Michelotti	Bob Anderson
19	John Krueger	Sandy Wagner
12	Jim Noel	Sharad Kelkar
18	George Guthrie	Cheryl Rofer
11	Cheryl Rofer	Tom Hakonson
21	Marja Shaner	Karen Warthen
18	Larry Creamer	George Guthrie
38	Kathleen Armstrong	Jim Haynes
7	Dorothy Hoard	Keith Dowler
30	Linda Ettinger	Greg Cole
46	Bart VandenPlas	Larry Dziuk
56	Don Krier	Donald Neeper
45	Darril Bultman	Robert Gillis
26	Mike Madonia	J. Smith
27	Stacy Ulrich	Alan Macgregor
64	Max Maes	Michael Burkheimer
23	**Pending Transfer**	Robert Vocke
02		Paul Aamodt
26	John Krueger	Mike Madonia

Los Alamos National Laboratory **Environmental Restoration Program** **Standard Operating Procedure**	No: LANL-ER-SOP-1.01 Rev: 0 Interim Procedure

General Instructions for Field Investigations

	(Print Name)	(Signature)	(Date)
Prepared by	Sandra E. Wagner	Sandra E. Wagner	2-27-92
Quality Review by	Larry Maassen	Larry Maassen	28 Feb 92
Technical Review by	Paul L. Aamodt	Paul L Aamodt	March 3, 1992
PM Approval	Robert W Vocke	Robert W Vocke	March 4, 1992
QPPL Approval	Karen L Warthen	Karen L Warthen	3/4/92

Effective Date: 3-16-92

General Instructions for Field Investigations

Table of Contents

1.0 PURPOSE 2

2.0 SCOPE 2
- 2.1 Applicability 2
- 2.2 Training 2

3.0 DEFINITIONS, RESPONSIBILITIES, AND ACRONYMS 2

4.0 BACKGROUND AND/OR CAUTIONS 4

5.0 EQUIPMENT 4

6.0 PROCEDURE 5
- 6.1 Premobolization Activities 5
- 6.2 Mobilization to the Site 6
- 6.3 Data Collection Activities 7
- 6.4 Sample Media Evaluation 8

7.0 REFERENCES 9

8.0 RECORDS 9

9.0 ATTACHMENTS 9

General Instructions for Field Investigations

1.0 PURPOSE

The purpose of this procedure is to provide an overview of instructions regarding activities to be performed before, during, and after field investigations. These activities and associated Standard Operating Procedures (SOPs) are shown in the Field Activity Flow Chart in Attachment A.

2.0 SCOPE

2.1 Applicability

This procedure will be used by all site workers for all Environmental Restoration (ER) program field operations.

2.2 Training

All site workers will document on the SOP Training Documentation Check List (Attachment B) that they have read and understand this procedure, other procedures in Section 1.0, General Instructions, and other appropriate SOPs.

3.0 DEFINITIONS, RESPONSIBILITIES, AND ACRONYMS

A. Operable Unit Project Leader (OUPL): Responsible for all Resource Conservation and Recovery Act (RCRA) investigations concerning the assigned OU, ensuring site workers are trained, readiness reviews performed, and appropriate regulators, Department of Energy (DOE) and LANL offices are informed of sampling events.

B. Field Team Leader (FTL): Responsible for implementing the Sampling and Analysis Plan (SAP) and the project specific Quality Assurance Project Plan (QAPjP), ensuring that site workers have the required Health and Safety (HS) training, and assisting the OUPL in ensuring that training to applicable SOPs is accomplished.

C. Radiation Protection Technician: Responsible for monitoring radiation levels onsite. The Radiation Protection Technicians are trained Health Physics Operations (HS-1 group or approved designee) personnel.

D. Industrial Hygienist: Responsible for monitoring industrial hygiene conditions affecting site worker health and safety. Industrial hygienists are trained Industrial Hygiene (HS-5 group or approved designee) personnel.

E. Health and Safety Project Leader (H&SPL): The H&SPL is responsible for reviewing the OU-specific H&S Plan to determine if all requirements for the health and safety of site workers, Laboratory personnel, and contractors are addressed.

   The H&S PL coordinates with ER, HS-1, Occupational Medicine Group (HS-2), Safety and Risk Assessment Group (HS-3), and HS-5 for resources for the implementation of the requirements of the H&S plan.

F. Site Safety Officer (SSO): HS-5 personnel (or their approved designee) responsible for worker health and safety; for example, ensuring that assigned workers are physically fit, that the required safety practices are observed, and that workers are monitored for health protection on site. (See Annex III, Section 5, IWP for functional reporting).

G. Field Team Members (FTM): May include Los Alamos National Laboratory (LANL) personnel, contractors, and subcontractors. They will be responsible for safely conducting the assigned field work in a manner that collects technically valid and legally defensible data.

H. Site Worker: Summary term for all of the above referenced individuals.

I. Technical Team Leader (TTL): Responsible for his/her team's involvement with integrating the team's technologies and methodologies, both new and existing, into the ER Program, including ensuring appropriate training is obtained.

J. HAZCAT: Hazard Categorization: A set of simple field procedures that enhances the safe handling and legal transportation of unknown materials. It does not take the place of a full laboratory analysis. The use of HAZCAT procedures will determine the correct Department of Transportation (DOT) shipping category for a sample.

K. Radiological Screening: A set of radiological measurements to be made prior to shipment of materials off site.

L. SCF: Sample Coordination Facility

M. SCF Coordinator: Responsible for coordinating the ER program's sample collection activities and sample analysis.

N. Exclusion Zone: The Exclusion Zone is considered to be the area onsite of highest potential for hazardous material exposure, into which access is restricted.

O. Contamination Reduction Zone: The Contamination Reduction Zone (CRZ) is designed to eliminate the spread of contaminated materials between the Exclusion and Support Zones on-site. A CRZ will be established around each Exclusion Zone so that the Exclusion Zone is completely isolated from the Support Zone.

P. Support Zone: The Support Zone includes those areas on-site outside the Exclusion and Contamination Reduction Zones and is considered to be the area of minimal potential risk of exposure to hazardous materials.

Q. Analytical Levels Appropriate to Data uses:

Level I - Total organic or inorganic vapors are detected using portable instruments such as Photoionization Detectors (PIDs). Field test kits for metals are also included in this level.

Level II - A variety of organics are detected using a field Gas Chromatograph, inorganics are detected with field instruments including Atomic Absorption Spectrophotometer and X-ray Fluorescence Spectrophotometer. The analysis provides tentative analyte specific identification.

Level III - Organic and inorganic compounds are determined using EPA procedures other than Contract Laboratory Program (CLP) and can be analyte specific.

Level IV - Pertains to non-conventional parameters and may include modification of existing methods. The detection limits are method-specific.

4.0 BACKGROUND AND/OR CAUTIONS

N/A

5.0 EQUIPMENT

N/A

6.0 PROCEDURE

6.1 Premobolization Activities

A. The OUPL or OUPL designee will conduct a readiness review meeting before field events that implement RFI sampling plans. The attendees will be, at a minimum, and as appropriate, the following site workers:

- FTL and field team managers, if appropriate,
- Industrial Hygienist,
- H&SPL
- SSO
- TTL(s), and
- SCF Supervisor.

If individuals in the positions above are unable to attend, a designee should be present.

The readiness review meeting will, at a minimum, ensure that

- appropriate site workers are scheduled and available,
- applicable plans and procedures for use during field events are assembled,
- sample containers, labels, and documentation material (e.g., forms, pens, tape, etc.) are accessible,
- appropriate analytical laboratories are notified and prepared for incoming samples,
- equipment is available for sampling event, and
- responsibilities applicable to specific subject areas (i.e., H&S, SOPs, etc.) are evaluated and that supplies and equipment are obtained by appropriate individuals.
- attendance at readiness review meetings will be documented (Attachment C is an example of an attendance form).

Additionally, appropriate regulators, DOE personnel, and LANL offices will be invited to attend.

B. Site workers will review the procedures presented in this document as well as all other Section 1.0, General Instructions, Standard Operating Procedures (SOPs). In addition, site workers will review SOPs, SAPs, and H&S Plans that are specific to the field effort.

C. The OUPL is responsible for contacting LANL divisions, subcontractors, and regulatory agencies. The ER Community Relations TTL is informed of the intent to mobilize for a an RFI so that he/she will be prepared to answer media questions. Field materials are organized and carefully loaded for transportation to the site, and site workers prepare to mobilize to the site.

6.2 Mobilization to the Site

A. Once on site, separate areas may be designated by the FTL, with SSO approval, for operations management and analytical needs. These may include but are not limited to the following:

1. Data Management Area: A central area that is sheltered from weather will be set up in the support zone for temporarily retaining all documentation generated during the field effort until requested by the OUPL.

2. Sample Management Area: An area that is sheltered from weather may be set up in the support zone. All sampling equipment for the field event will be stored here when not in use, (this includes spare sample containers, identification labels, coolers, field screening equipment, etc.). In addition to sampling equipment, samples will be handled in this area after screening results have been received. Samples will be stored here until they can be sent to the SCF to ensure that chain of custody is not broken..

3. Screening Area: An area sheltered from weather that is used for the purpose of rapidly field screening sample material for radiological and chemical contamination using analytical Levels I, II, and V. This area can be provided in the field by EM-9 and may be located in the contamination reduction zone. All samples, decontaminated sampling equipment, and materials will be stored here until screening results have been received. Samples will be handled at this location to reduce the potential of contamination from the surface of the container. In addition, excess media (soil, cores, sediment, biota, etc.) will be stored in this area until screening results have been received and media can be transferred to the curation staging area or disposed of as waste.

4. Curation Staging Area: A specified area in the support zone that is sheltered from the weather and is used to temporarily store excess media that meets curation criteria as defined in the SOPs in Section 12.0,

Curatorial Management Activities, and that may be used in future analyses. The media will be transferred to a permanent curation storage facility from this area. This area will be provided by EES.

5. Field Analytical Laboratory: An area designated for analyzing samples may be set up in the support zone. This area will be sheltered from the weather and will contain field analytical instruments. This area will be provided by EM-9. . The function of this laboratory is to provide on-site analytical capabilities up to Level III Analysis.

6.3 Data Collection Activities

A. One copy of all LANL-ER-SOPs in Section 1.0, General Instructions, will be kept on site in the data management area at all times, and will be made available to all site workers. All site workers must have documented on the SOP Documentation Check List (Attachment B) that they have read and understand these procedures.

B. FTL or designee will conduct daily by reviewing the site-specific Health and Safety Plan. All site workers will attend as well as any subcontractors participating in any part of the field effort.

C. Calibrate equipment in accordance with procedures described in the site-specific SAP, LANL ER SOPs, or in the equipment instruction manual.

D. Document all activities relating to the progress of the RFI. The following mandatory forms are provided by the SCF and will be used for field documentation and sample identification, and will be completed daily. See LANL-ER-SOP-01.04, Sample Control and Field Documentation, for specific information to be included on these documents.

1. Daily Activity Log: The FTL is responsible for completing this log and will record all information pertinent to the investigation on it.

2. Unique Sample Identification (ID) Number Stickers: A sheet of sample ID number stickers will be provided for each sample collected. Each sheet will have at least ten sample stickers with identical numbers. The number series will be unique to each sheet of sample stickers and, therefore, will be unique for each sample. All sample control will be through the unique ID number.

3. Sample Labels: Preprinted sample labels provide sample information. A sample label will be attached to every sample that is collected. The SCF will accept only those samples with affixed sample labels.

4. Sample Collection Log: A Sample Collection Log will be completed for every sample suite collected. All information pertaining to specific samples in a suite is recorded on this log.

5. Chain-of-Custody/Request for Analysis Forms: A Chain-of-Custody/Request for Analysis form will accompany every sample(s) and every shipment of samples to the SCF in order to establish the documentation necessary to trace sample possession from the time of collection to final disposition. The SCF will accept only those samples accompanied by a Chain-of-Custody/Request for Analysis Form.

6. Custody Seals: A custody seal will be placed over the lid of each sample container. For 40 millimeter vials, the seal will not be placed over the septa; instead, wrap the seal horizontally around the bottle and lid. Binding tape will be placed around the sample shipping-container, and a custody seal will be placed over the binding tape. Custody seals will be signed and dated by a member of the sampling team.

E. Field documentation will be submitted daily to the field files located in the Data Management Area. Data will be reviewed daily by the FTL, and signed, as appropriate.

F. A representative portion of the media collected will be used for Radiological and HAZCAT Screening.

G. Waste generated during the field effort will be managed according to LANL-ER-SOP-1.06, Management of RFI-Generated Waste. For general questions pertaining to waste handling, contact EM-7, at 665-4000.

6.4 Sample Media Evaluation

A. Where an on-site screening area is available, a representative portion of the media collected will be screened before the samples are preserved (See LANL-ER-SOP-01.02, Sample Containers and Preservation) and delivered to the SCF for packaging and shipment to the designated laboratory(ies) (See LANL-ER-SOP-01.03, Handling, Packaging and Shipping of Samples).

   If the samples are not screened on site, the sample will be preserved in the Contamination Reduction Zone and sent to the SCF promptly after collection and will be screened for radioactive and hazardous constituents at the facility. After the samples are screened, they will be packaged and shipped to designated laboratory(ies).

B. If the screening results indicate that the excess material meets the curation criteria, it will be packaged and temporarily stored at the curation staging

area on-site until it can be transferred to a permanent curation storage facility. If curation is unnecessary or if it does not meet curation criteria, the excess material will be dealt with as waste per LANL-ER-SOP-1.06, Management of RFI-Generated Waste.

C. The designated laboratory receiving the samples will analyze the samples and report the results to the SCF. The SCF will validate the data and transfer the results to the OUPL. These results will used in determining further corrective actions.

D. The OUPL is responsible for ensuring that copies of all records and data generated as a result of the field investigation and readiness review are sent to the ER Records Processing Facility per LANL-ER-AP-2.01, Procedure for Environmental Restoration Records Management.

7.0 REFERENCES

LANL-ER-AP-2.01, Procedure for Environmental Restoration Records Management
LANL-ER-SOP-1.01, General Instructions for Field Personnel
LANL-ER-SOP-1.02, Sample Containers and Preservation
LANL-ER-SOP-1.03, Handling, Packaging, and Shipping
LANL-ER-SOP-1.04, Sample Control and Field Documentation
LANL-ER-SOP-1.05, Field Quality Control
LANL-ER-SOP-1.06, Management of RFI-Generated Waste

8.0 RECORDS

Readiness Review Attendance Documentation
SOP Training Documentation Check List

9.0 ATTACHMENTS

Attachment A - Field Activity Flow Chart
Attachment B - SOP Training Documentation Check List
Attachment C - Readiness Review Attendance Form

FIELD ACTIVITY FLOW CHART

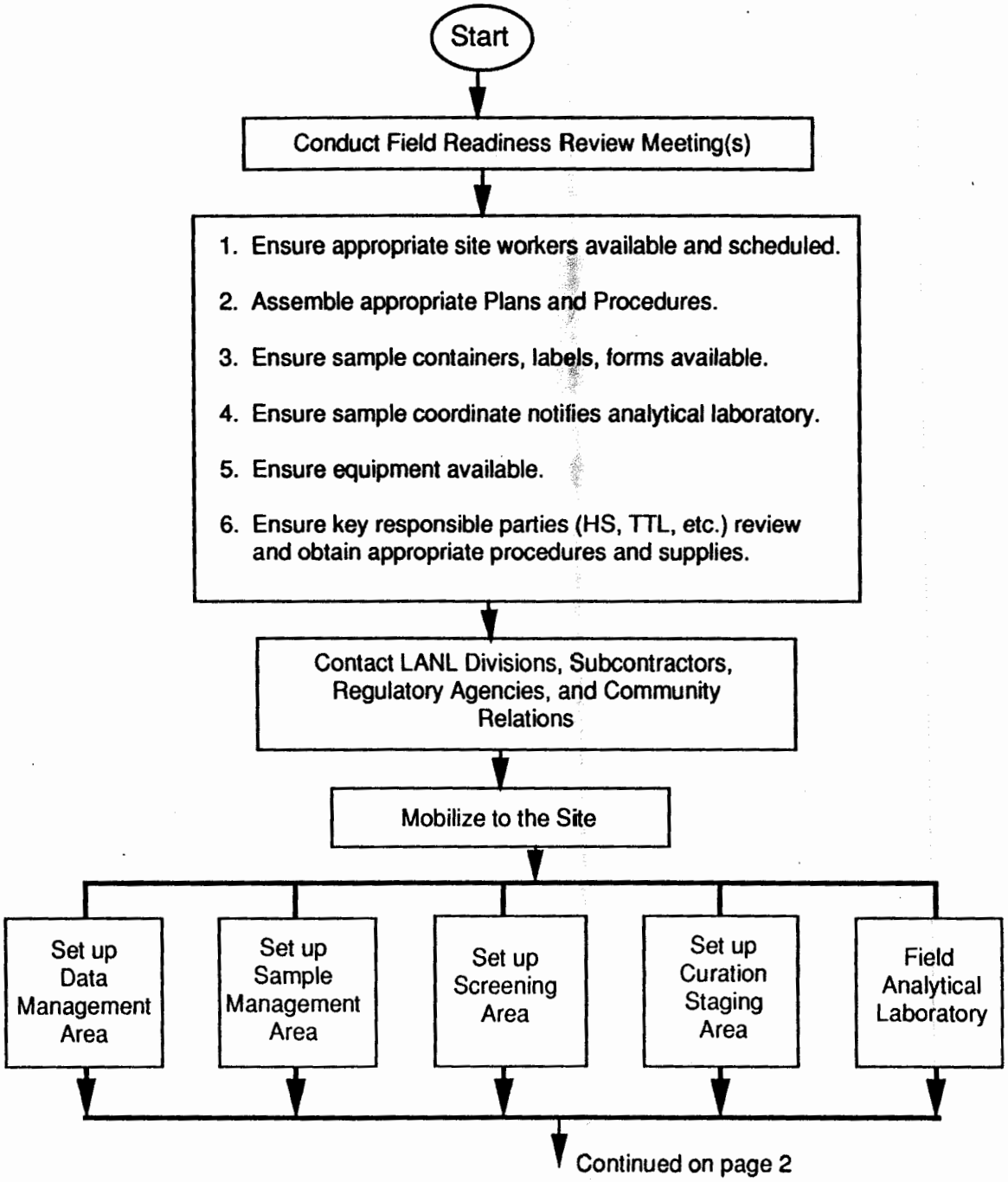

Continued on page 2

Los Alamos National Laboratory Environmental Restoration
FIELD ACTIVITY FLOW CHART (continued)

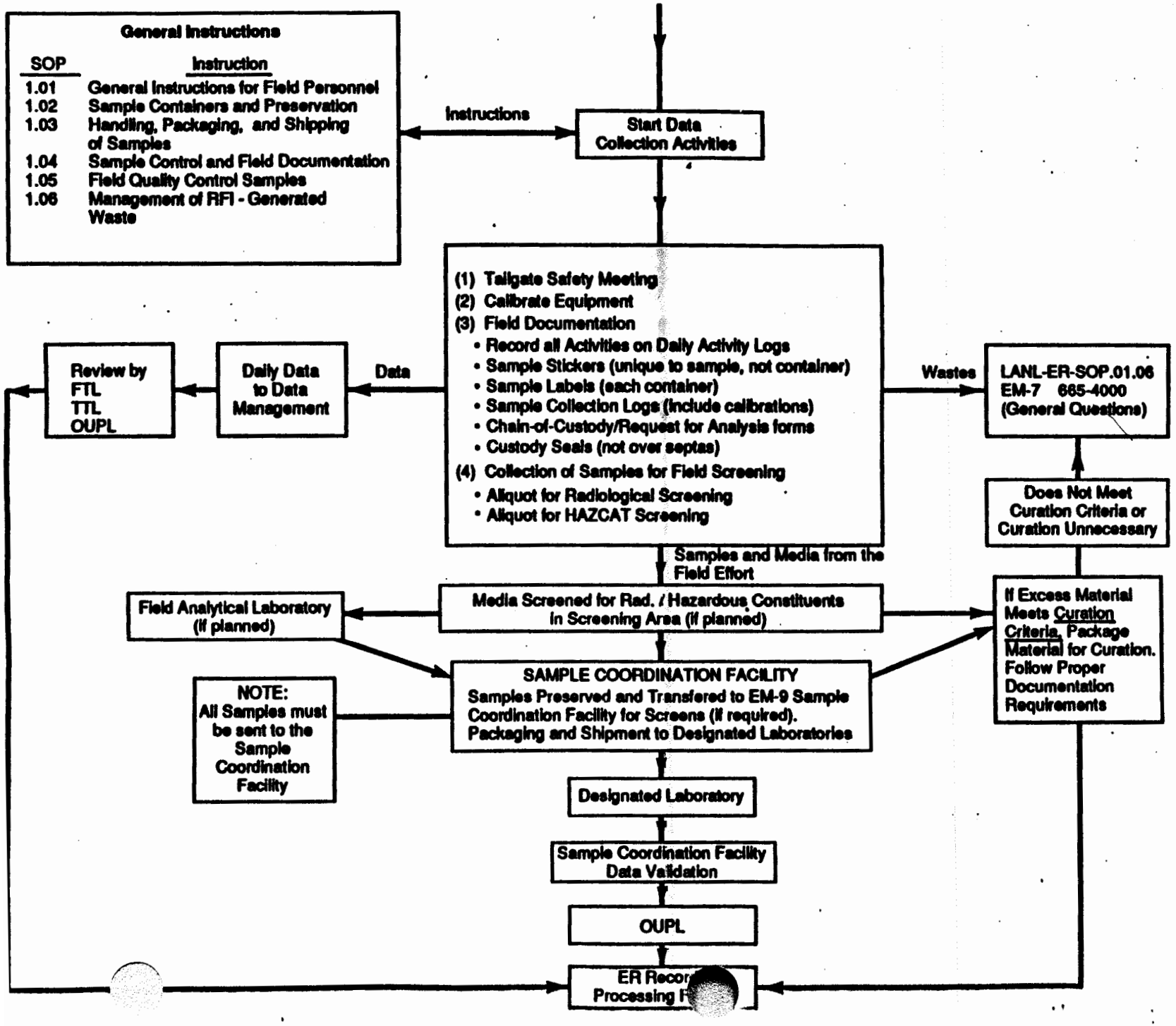

Los Alamos National Laboratory
Environmental Restoration SOP Training Documentation Check List

Date: _____ Sheet ____ of ____

Technical Area _____

Operable Unit _____

Signature of FTL: _____

Site Work Plan: _____

Your initials next to a procedure indicates that you have read and understood the procedure.

_____ SOP-1.01, General Instructions for Field Investigations

_____ SOP-1.02, Sample Containers and Preservation

_____ SOP-1.03, Handling, Packaging, and Shipping of Samples

_____ SOP-1.-04, Sample Control and Field Documentation

_____ SOP-1.05, Field Quality Control Samples

_____ SOP-1.06, Management of RFI Generated Waste

EXAMPLE
CONTACT THE
ER PROGRAM OFFICE
(665-4557) TO OBTAIN
ORIGINAL FOR YOUR USE

Additional procedures:

_____

_____

_____

_____

_____

_____

Name: _____

Signature: _____

Date: _____

Employer: _____

Los Alamos National Laboratory Environmental Restoration
READINESS REVIEW MEETING ATTENDANCE FORM

Page 1 of _____

SUBJECT: _____

OBJECTIVE(S): _____

Meeting conducted by:

Print Name	Signature	Date

EXAMPLE

PRINTED NAME	SIGNATURE	ORGANIZATION/MS	PHONE
		/MS	
		/MS	
		/MS	
		/MS	
		/MS	
		/MS	
		/MS	
		/MS	
		/MS	
		/MS	
		/MS	
		/MS	
		/MS	
		/MS	
		/MS	

CONTACT THE
ER PROGRAM OFFICE
(665-4557) TO OBTAIN
ORIGINAL FOR YOUR USE

Los Alamos National Laboratory Environmental Restoration
READINESS REVIEW MEETING ATTENDANCE FORM
(continuation form)

Page _____ of _____

SUBJECT: _____ DATE: _____

PRINTED NAME	SIGNATURE	ORGANIZATION/MS	PHONE
		/MS	
		/MS	
		/MS	
		/MS	
		/MS	
		/MS	
		/MS	
		/MS	
		/MS	
		/MS	
		/MS	
		/MS	
		/MS	
		/MS	
		/MS	
		/MS	
		/MS	
		/MS	
		/MS	
		/MS	
		/MS	
		/MS	

EXAMPLE

CONTACT THE
ER PROGRAM OFFICE
(665-4557) TO OBTAIN
ORIGINAL FOR YOUR USE

Los Alamos National Laboratory **Environmental Restoration Program** Standard Operating Procedure	No: LANL-ER-SOP-01.02 Rev: 0

Sample Containers and Preservation

	(Print Name)	(Signature)	(Date)
Preparer:	Sandra Wagner	Sandra Wagner	12-24-91
Quality Review by:	Larry Maassen	Larry Maassen	2-1-92
Technical Review by:	John J. Miglio	John J Miglio	2/18/92
Technical Review by:	Paul L. Aamodt	Paul L Aamodt	March 3, 1992
QPPL Approval:	Karen L. Warthen	Karen L Warthen	2/27/92
PM Approval:	Robert W Vocke	Robert W Vocke	March 4, 1992

Effective Date: 3-16-92

Sample Containers and Preservation

Table of Contents

1.0 PURPOSE 2

2.0 SCOPE 2
- 2.1 Applicability 2
- 2.2 Training 2

3.0 DEFINITIONS/ACRONYMS 2

4.0 BACKGROUND AND/OR CAUTIONS 3

5.0 EQUIPMENT 3

6.0 PROCEDURE 3
- 6.1 Containing Procedures 4
- 6.2 Sample Preservation 5
- 6.3 Holding Time 6

7.0 REFERENCES 6

8.0 RECORDS 7

9.0 ATTACHMENTS 7

Sample Containers and Preservation

1.0 PURPOSE

This procedure describes specific requirements for sample containers, preservation techniques and holding times as specified by field regulations and guidance documents.

2.0 SCOPE

2.1 Applicability

This procedure is applicable to all Environmental Restoration (ER) activities involving the collection and preservation of samples that will be shipped to the Los Alamos National Laboratory Sample Coordination Facility (SCF) for subsequent chemical or physical testing.

2.2 Training

The Field Team Leader (FTL) is responsible for the implementation of this procedure and the FTL and field team members must document that they have read and understand this procedure and the other procedures in Section 1.0, General Instructions.

3.0 DEFINITIONS/ACRONYMS

A. ASTM: American Society for Testing and Materials

B. CLP: Contract Laboratory Program

C. DOT: U.S. Department of Transportation

D. EPA: U.S. Environmental Protection Agency

E. Holding time: The elapsed time between sample collection and initiation of laboratory analysis. The holding time is from date of sampling to date of analysis, not the date the designated laboratory receives the sample.

F. IATA: International Air Transport Association

G. RCRA: Resource Conservation and Recovery Act

H. RFI: RCRA Facilities Investigation

I. SCF: Sample Coordination Facility

J. SW-846: EPA approved test methods for Solid Waste identified in EPA-SW-846.

K. TCLP: Toxicity Characteristic Leaching Procedure (Method 1311), which is a codified (40CFR Parts 261, 264, 265, 268, 271, and 302) procedure.

4.0 BACKGROUND AND/OR CAUTIONS

The use of specific types of sample container and preservation techniques is mandatory for hazardous site investigations because the integrity of any sample is diminished over time. Physical factors (light, pressure, temperature, etc.), chemical factors (changes in pH, volatilization, etc.), and biological factors may alter the original quality of the sample. Because the various target parameters are uniquely altered at varying rates, distinct sample containers, preservation techniques, and holding times have been established to maintain sample integrity for a reasonable and acceptable period of time.

The volume of sample collected should be sufficient to perform all the required analyses, plus an additional amount to provide for any quality control needs, split samples, or repeat examinations. The volumes, preservatives, and holding times listed in Attachments A through F are the EPA requirements. Since the SCF operated by EM-9 will be either performing the analyses or making arrangements for the analyses, sampling schedules and sample needs must be coordinated with the SCF prior to sampling.

All proposed ER Program sampling plans are reviewed at the SCF for adherence to sampling protocols mandated by all applicable EPA regulations and analytical methods. The Sampling and Analysis Plan (SAP) will address the proper analytical protocol. SW-846 provides test procedures and guidance which are recommended for use in conducting the evaluations and measurements needed to comply with the RCRA (Public Law 94-850). These methods are approved by EPA to satisfy the data requirements of 40 CFR 120-270. The topics of concern include the sampling schedule, proper sample sizes and containers, correct preservation techniques, chain-of-custody requirements, and transportation of samples to the SCF. Appendix O of the Los Alamos National Laboratory Installation Work Plan details the duties of the SCF.

5.0 EQUIPMENT

Equipment needed to implement this procedure is listed on the Equipment and Supplies Check List for Sample Containers and Preservation (Attachment G).

6.0 PROCEDURE

A. Contact the SCF for guidance and assistance in obtaining the proper sample containers and preservatives.

B. Refer to an Operable Unit (OU)-specific SAP for site-specific procedures for sample containers and preservation. In addition, follow the protocols established in EPA's SW-846, Test Methods for Evaluation of Solid Waste.

C. Record all pertinent comments and any deviations on the Daily Activity Log per LANL-ER-SOP-01.04.

D. Contact the SCF for guidance and acquisition of the proper sample containers.

1. Identify the containers required for analysis by matrix as shown in Attachments A through F (for example, amber glass, narrow-mouth bottles for polychlorinated biphenyl [PCB] analysis of water samples).

   a. Based on information in the SAP, choose a sample container that is nonreactive with the sample and the particular analytical parameter to be tested.

   b. Use glass or fluorocarbon resin containers with samples analyzed for organic compounds to prevent the introduction of extraneous organic compounds, such as those that might be leached from plastic containers.

   c. The rigid plastic screw caps for the bottles must be Teflon lined to prevent contamination of the sample.

2. Calculate and order the number of each type of container required by including duplicates and blanks with the number of investigative samples specified in the OU-specific SAP.

3. Acquire a sufficient number of containers to ship the proper sample volume. For example, Department of Transportation (DOT) and International Air Transport Authority (IATA) regulations limit the size of a sample container to 16 oz if the contents may include hazardous materials. In this case, two 500-ml or four 250-ml containers would be required to ship a 1-liter fluid sample.

4. Adhere to DOT regulations for on-site transfer of samples to the SCF over public-access roads. Refer to SOP-01.03, Handling, Packaging, and Shipping of Samples, for additional information.

6.1 Containing Procedures

A. If soil, sludge or wastes are submitted to the laboratory in containers other than those in which they were collected, the container should be glass, wide mouth bottles with a Teflon cap liner. For specific methods, see Attachment D.

B. If soil samples are submitted to the laboratory in the sample equipment in which they were collected, the container must have the end covered with Teflon or aluminum foil, have a plastic cap placed over the end, and have the cap taped in place. This procedure reduces the chance for loss of moisture or volatile organic compounds (VOCs).

C. The type and size of container used for water samples and aqueous waste samples varies based on the type of analysis to be performed. Refer to Attachments A and B for specific information on water sample containers and Attachment C for information on aqueous waste sample containers.

D. Sample containers received from SCF will be precleaned to EPA specifications before they are sent to the site. A certificate of cleanliness will be retained by the SCF, with a copy provided with the containers.

6.2 Sample Preservation

A. Regardless of the sample type or container, unless site-specific guidelines state otherwise, samples collected for chemical analysis should be preserved by placing them in an insulated container (cooler) and maintained on ice (ice in bags or chemical "blue" ice) at 4° Centigrade (C).

B. Avoid freezing the sample by wrapping it in bubble pack to isolate from the "blue" ice.

C. Containers for water samples and aqueous waste may arrive at the OU site from the SCF with the proper type and amount of preservatives in them. If so, do not prerinse or overfill.

D. If on-site preservation of aqueous samples is necessary, the proper reagents should be provided to field team members in an easily usable form that can be added at the time of sampling. Reagents that are designated as hazardous by the DOT Hazardous Materials Table, Title 49 Code of Federal Regulations (CFR) 172.101, are shipped pursuant to the appropriate DOT regulations.

E. If using an acid or base preservative, check the pH adjustment with pH paper.

F. Preservation required for the specific analyses requested for aqueous samples may be determined by using Attachments A through C, or by consulting the referenced documents.

G. Solid sediment and solid waste for chemical analysis will always be preserved on ice to 4°C. See Attachments D through F.

H. A sufficient amount of ice should be brought to the field to ensure proper sample cooling immediately following collection. A temperature of 4°C must be maintained until the samples arrive at the SCF.

I. The temperature shall be checked and recorded at the laboratory to determine if preservation has been accomplished.

6.3 Holding Time

A. Analyze samples as soon as possible after collection.

B. Some parameters are required to be analyzed in the field (refer to Attachment A).

C. Allowable holding times are listed and are the maximum times that samples are considered valid, based on available guidance (see Attachments A through F).

D. The OU-specific maximum holding times will be listed in the RFI Workplan.

E. Holding times for SW-846 methods start when the sample is collected. Both the sampler and the laboratory use this time/date.

F. Holding times for the Contract Laboratory Program (CLP) methods for the samples is the day of collection. The laboratory date is date received at the designated laboratory. Delayed shipping will result in missed holding time for the data. Transfer the samples to the SCF as soon as possible.

7.0 REFERENCES

The following procedures are directly associated with this procedure and should be reviewed before field operations commence:

LANL-ER-SOPs in Section 1.0, General Instructions
LANL-ER-SOP-02.07, General Equipment Decontamination
LANL-ER-SOP-06.03, Sampling for Volatile Organics

Title 40 CFR Part 261

Title 49 CFR Part 172.101

EPA (U.S. Environmental Protection Agency), 1982. "Handbook for Sampling and Sample Preservation of Water and Wastewater." Report EPA-600/4-82-029. Washington, D.C.

EPA (U.S. Environmental Protection Agency), 1983. "Methods for Chemical Analysis of Water and Wastes." Report EPA-600/4-79-020. Washington, D.C.

EPA (U.S. Environmental Protection Agency), 1983. "Manual of Groundwater Quality Sampling Procedures." Report EPA/600/2-81-160. Washington, D.C.

EPA (U.S. Environmental Protection Agency), 1986. "Test Methods for Evaluating Solid Waste." Report EPA-SW-846. Washington, D.C.

EPA (U.S. Environmental Protection Agency), 1985. "Practical Guide for Groundwater Sampling." Report EPA/600/2-85/104. U.S. Government Printing Office, Washington, D.C.

EPA (U.S. Environmental Protection Agency), 1986. "RCRA Groundwater Monitoring Technical Enforcement Guidance Document." Document OSWER-9950.1. U.S. Government Printing Office, Washington, D.C.

EPA (U.S. Environmental Protection Agency) Region IV, 1991. "Environmental Compliance Branch Standard Operating Procedures and Quality Assuarance Manual," Appendix A, Environmental Services Division, Athens, Georgia

Korte, Nic, and Peter Kearl, 1985. "Procedures for the Collection and Preservation of Groundwater and Surface Water Samples and for the Installation of Monitoring Wells: Second Edition." U.S. Department of Energy Report GJ/TMC-08 Technical Measurements Center, Grand Junction Project Office, Grand Junction, Colorado

Williams, M.C., 1990. Handbook for Sample Collection, Preservation, Instrumental Techniques. Los Alamos National Laboratory Report LA-11738-M, Los Alamos, New Mexico

8.0 RECORDS

A. Completed Chain-of-Custody/Request for Analysis Form

B. Completed Daily Activity Log

9.0 ATTACHMENTS

A. Recommendation for Sampling and Preservation of Water Samples According to Measurement (Low- to Medium-Contaminant Concentration Samples)

B. Sampling and Preservation Procedures for RCRA Groundwater Detection Monitoring

C. Containers for Aqueous Waste Samples

D. Preservation Plan for Soil/Sediment Samples

E. Sample Containers for Waste

F. Preservation Plan for Soil/Sediment Waste Samples

G. Equipment and Supplies Check List for Sample Containers and Preservation

RECOMMENDATION FOR SAMPLING AND PRESERVATION OF WATER SAMPLES ACCORDING TO MEASUREMENT[a] (LOW TO MEDIUM CONTAMINANT CONCENTRATION SAMPLES)

Measurement	Volume Requirement millimeter (ml)	Container[b,c]	Preservative[d,e]	Holding Time[f,g]
		Physical Properties		
Color	50	P,G	Ice[h]	48 hrs
Specific Conductance	100	P,G	Ice	24 hrs
Hardness	100	P,G	HNO_3 to pH<2	6 mos
Odor	200	G only	Ice	24 hrs
pH	25	P,G	N/A	Determine on site
Residue				
Filterable	100	P,G	Ice	7 days
Nonfilterable	100	P,G	Ice	7 days
Total	100	P,G	Ice	7 days
Volatile	100	P,G	Ice	7 days
Settleable Matter	1000	P,G	Ice	48 hrs
Temperature	1000	P,G	N/A	Determine on site
Turbidity	100	P,G	Ice	48 hrs
		Metals (except Mercury and Chromium^{+6})		
Dissolved	200	P,G	Filter on site HNO_3 to pH<2	6 mos 6 mos[i]
Suspended	200	P,G	Filter on site	6 mos
Total	100	P,G	HNO_3 to pH<2	6 mos
Chromium^{+6}	200	P,G	Ice	24 hrs
Mercury				
Dissolved	100	P,G	Filter HNO_3 to pH<2	28 days
Total	100	P,G	HNO_3 to pH<2	28 days

RECOMMENDATION FOR SAMPLING AND PRESERVATION OF WATER SAMPLES ACCORDING TO MEASUREMENT[a] (LOW TO MEDIUM CONTAMINANT CONCENTRATION SAMPLES) (Continued)

Measurement	Volume Requirement (ml)	Container[b,c]	Preservative[d,e]	Holding Time[f,g]
		Inorganics, Nonmetallics		
Acidity	100	P,G	Ice	14 days
Alkalinity	100	P,G	Ice	14 days
Bromide	100	P,G	None Required	28 days
Chloride	100	P,G	None Required	28 days
Chlorine	200	P,G	N/A	Determine on site
Cyanides	500	P,G	Cool 4°C Ice NaOH to pH>12 0.6 g ascorbic acid	14 days
Fluoride	300	P,G	Ice	28 days
Iodide	100	P,G	Ice	24 hrs
Nitrogen				
Ammonia	400	P,G	Ice H_2SO_4 to pH<2	28 days
Nitrogen, Total Kjeldahl	500	P,G	Ice H_2SO_4 to pH<2	28 days
Nitrate Plus Nitrite	100	P,G	Ice H_2SO_4 to pH<2	28 days
Nitrate[i]	100	P,G	Ice	48 hrs
Nitrite	50	P,G	Ice	48 hrs
Dissolved Oxygen				
Probe	300	G bottle and top	N/A	Determine on site
Winkler	300	G bottle and top and store in dark	Fix on site	8 hrs
Phosphorus				
Orthophosphate, Dissolved	50	P,G	Filter on site, Ice	48 hrs
Hydrolyzable	50	P,G	Ice H_2SO_4 to pH<2	28 days

RECOMMENDATION FOR SAMPLING AND PRESERVATION OF WATER SAMPLES ACCORDING TO MEASUREMENT[a] (LOW TO MEDIUM CONTAMINANT CONCENTRATION SAMPLES) (Continued)

Measurement	Volume Requirement (ml)	Container[b,c]	Preservative[d,e]	Holding Time[f,g]
Total, Dissolved	50	P,G	Filter on site, Ice H_2SO_4 to pH<2	24 hrs
Silica	50	P only	Ice	28 days
Sulfate	50	P,G	Ice	28 days
Sulfide	50	P,G	Ice 2 ml zinc acetate(2N) NaOH to pH >9	24 hrs
Sulfite	100	P,G	N/A	Determine on site
		Organics		
BOD	1,000	P,G	Ice	48 hrs
COD	50	P,G	Ice H_2SO_4 to pH<2	28 days
Oil and Grease	1,000	P,G	Ice H_2SO_4 to pH<2	28 days
Organic Carbon	25	P,G	Ice H_2SO_4 or HCl to pH<2	28 days
Phenolics	500	G only	Ice H_2SO_4 to pH<2	28 days
Cyanides	1,000	P,G	Ice 40% NaOH to pH>12 0.6 g ascorbic acid	14 days
Coliform, Fecal, and Total	250	P,G	Ice Sterile	6 hrs
Oil and Grease	1,000	G	Ice H_2SO_4 to pH<2	28 days
Organic Carbon	25	P,G	Ice H_2SO_4 to pH<2	28 days
Phenols	1,000	G, Teflon™-lined cap	Ice	7 days until extraction; 40 days after extraction
Total Organic Halogen and Purgeable Aromatics	40	G, vial with Teflon™-lined septum	Ice 0.008% $Na_2S_2O_3$[j]	14 days

RECOMMENDATION FOR SAMPLING AND PRESERVATION OF WATER SAMPLES ACCORDING TO MEASUREMENT[a] (LOW TO MEDIUM CONTAMINANT CONCENTRATION SAMPLES) (Continued)

Measurement	Volume Requirement (ml)	Container[b,c]	Preservative[d,e]	Holding Time[f,g]
Purgeable Aromatics	40	G, vial with Teflon™-lined septum	Ice 0.008% $Na_2S_2O_3$[k]	14 days
Acrolein and Acrylonitrile	1,000	G, Teflon™-lined septum	Ice 0.008% $Na_2S_2O_3$[k]	14 days
Phenols	1,000	G, Teflon™-lined cap	Ice	7 days until extraction; 40 days after extraction
Benzidines	1,000	G, Teflon™-lined cap	Ice 0.008% $Na_2S_2O_3$[k]	7 days until extraction; 40 days after extraction
Phthalate Esters	1,000	G, Teflon™-lined cap	Ice 0.008% $Na_2S_2O_3$[k]	7 days until extraction; 40 days after extraction
Nitrosamines	1,000	G, Teflon™-lined cap	Ice store in dark 0.008% $Na_2S_2O_3$[k]	7 days until extraction; 40 days after extraction
Nitroaromatics and Isophorone	1,000	G, Teflon™-lined cap	Ice	7 days until extraction; 40 days after extraction
Polynuclear Aromatic Hydrocarbons	1,000	G, Teflon™-lined cap	Ice	7 days until extraction; 40 days after extraction
Haloethers	1,000	G, Teflon™-lined cap	Ice	7 days until extraction; 40 days after extraction
Chlorinated Hydrocarbons	1,000	G, Teflon™-lined cap	Ice	7 days until extraction; 40 days after extraction

RECOMMENDATION FOR SAMPLING AND PRESERVATION OF WATER SAMPLES ACCORDING TO MEASUREMENT[a] (LOW TO MEDIUM CONTAMINANT CONCENTRATION SAMPLES) (Continued)

Measurement	Volume Requirement (ml)	Container[b,c]	Preservative[d,e]	Holding Time[f,g]
Tetrachlorodibenzo-p-dioxin	1,000	G, Teflon™-lined cap	Ice	7 days until extraction; 40 days after extraction
		Pesticides and PCBs		
Pesticides and PCBs	1,000	G, Teflon™-lined cap	Ice	7 days until extraction; 40 days after extraction
		Radiological Tests		
Alpha, Beta and Radium	1,000	P,G	HNO_3 to pH<2	No limit
Tritium	25	G	None	No limit
Isotopic Uranium	500	P	HNO_3 to pH<2	No limit
^{90}Sr	1,000	P	HNO_3 to pH<2	No limit
^{238}Pu	500	P,G	HNO^3 to pH<2	No limit
^{239}Pu	500	P,G	HNO^3 to pH<2	No limit
^{137}Cs	500	P,G	HNO^3 to pH<2	No limit
^{241}Am	500	P,G	HNO^3 to pH<2	No limit

[a]More specific instructions for preservation and sampling are found with each applicable SAP. A general discussion about sampling water and industrial wastewater is found in EPA Region IV (1991); EPA (1986); and EPA (1985).

[b]Container Types:

P = Plastic (polyethylene)
G = Glass
T = Fluorocarbon resins (PTFE, Teflon™, FEP or PFA)
PP = Polypropylene

[c]Shipping containers (cooling chest with ice or ice pack) should be certified as to the 4°C temperature at the time of sample placement into these containers. Preservation of samples requires that the temperature of collected samples be cooled to 4°C upon collection of sample and during shipment. Field personnel will check the temperature in the container at the time of shipping and ice the samples to maintain a cool temperature during shipment. Maximum-minimum thermometers can be placed into the shipping chest to record temperature history. Chain-of-custody forms will include the temperature in the container at the time of shipment and at delivery to the laboratory in addition to in-transit (maximum) temperature, if available.

[d]Sample preservation should be performed immediately upon sample collection. For composite samples, each aliquot should be preserved at the time of collection. When use of an automated sampler makes it impossible to preserve each aliquot, samples may be preserved by cooling to 4°C until compositing and splitting are completed.

[e]When any sample is to be shipped by common carrier or sent through the United States mail, it must comply with the DOT Materials Regulations (49 CFR Part 172). The SCF is responsible for ensuring compliance. For preservation requirements, the Office of Hazardous Materials, Materials Transportation Bureau, Department of Transportation has determined that the Hazardous Materials Regulations do not apply to the following material: Hydrochloric acid (HCl) in water solutions at concentrations of 0.22% by weight or less, with pH less than 2.0 but greater than or equal to 1.0.

[f]Samples should be analyzed as soon as possible after collection. The times listed are the maximum periods that samples may be held and still be considered valid. Samples may be held for longer periods only if the permittee, or analytical laboratory, has data on file to show that the specific types of samples under study are stable for a longer time and has received a variance from the EPA Regional Administrator.

[g]Maximum holding time is 24 hours when sulfide is present. Optional testing of all samples with lead acetate paper before the pH adjustment will determine if sulfide is present. If sulfide is present, it can be removed by adding of cadmium nitrate powder until a negative spot test is obtained. The sample is filtered and the pH is adjusted to 12 with NaOH.

[h]Shipping containers (cooling chest with ice or ice pack) should be verified as to the 4°C temperature at the time of sample placement into these containers. Preservation of samples requires that the temperature of collected samples be cooled to 4°C upon collection of sample and during shipment. Field personnel will check the temperature in the container at the time of shipping and ice the samples to maintain a cool temperature during shipment. Chain-of-custody forms will include the temperature in the container at the time of shipment and at delivery to Laboratory.

[i]Samples should be filtered on site immediately, before adding preservative for dissolved metals.

[j]For samples from nonchlorinated drinking water supplies, concentrated H_2SO_4 should be added to lower sample pH to less than 2. The sample should be analyzed within 14 days.

[k]Should only be used in the presence of residual chlorine.

[l]Use ml volume requirements for water and gram requirements for media other than liquids.

[m]No preservation for media other than water.

SAMPLING AND PRESERVATION PROCEDURES FOR RCRA GROUNDWATER DETECTION MONITORING[a]

Parameter	Minimum Volume Required for Analysis (ml)	Recommended Container[b,c]	Preservative[d,e]	Maximum Holding Time[f,g]
		Indicators of Groundwater Contamination[h]		
pH	25	T,P,G	Field determined	None
Specific Conductance	100	T,P,G	Field determined	None
Total Organic Carbon	4 x 15	G, amber, T-lined cap[f]	Ice	28 days HCl to pH<2
Total Organic Halogen	4 x 15	G, amber, T-lined septa or caps	Ice, add 1.1M sodium sulfite	7 days
		Groundwater Quality Characteristics		
Chloride	50	T, P, G	Ice	28 days
Iron Manganese Sodium	200	T, P	Field acidified to pH <2 with HNO_3	6 months
Phenols	500	G	Ice/H_2SO_4 to pH <2	28 days
Sulfate	50	T, P, G	Ice	28 days
		Drinking Water Characteristics		
Arsenic Barium Cadmium	500	T, P	Total Metals Field acidified to pH <2 with HNO_3	6 months
Chromium	500			6 months
			Dissolved Metals	
Lead		T,P		
Mercury	500	T,P	Field filtration	6 months
Selenium		T,P		
Silver		Dark Bottle	Acidify to pH <2 with HNO_3	

SAMPLING AND PRESERVATION PROCEDURES FOR RCRA GROUNDWATER DETECTION MONITORING[a] (Continued)

Parameter	Minimum Volume Required for Analysis (ml, unless noted otherwise)	Recommended Container[b,c]	Preservative[d,e]	Maximum Holding Time[f,g]
Fluoride	300	T, P	Ice	28 days
Nitrate/Nitrite[i]	1,000	T, P, G	Ice/H_2SO_4 to pH <2	14 days
Endrin Lindane Methoxychlor Toxaphene 2,4 Dichlorophenol 2,4,5 Trichlorophenol Silvex	2,000	T, G	Ice	7 days
Radium Gross Alpha Gross Beta	1 gallon	P, G pH <2 with HNO_3	Field acidified to	6 months
Coliform bacteria	200	PP, G (sterilized)	Ice	6 hours
		Other Groundwater Characteristics of Interest[h]		
Cyanide	250	P, G pH >12. 0.6 g ascorbic acid[j]	Ice, NaOH to	14 days
Oil and Grease	1,000	G only pH <2	Ice H_2SO_4 to	28 days
Semivolatile, Nonvolatile Organics	60	T, G	Ice	14 days
Volatiles	60	G, T-lined	Ice	14 days

[a]References:

EPA (U.S. Environmental Protection Agency) 1986. "Test Methods for Evaluating Solid Waste - Physical/Chemical Methods," Report EPA-SW-846 (3rd edition). Washington, D.C.

EPA (U.S. Environmental Protection Agency) 1983. "Methods for Chemical Analysis of Water and Wastes," Report EPA-600/4-79-020. Washington, D.C.

"Standard Methods for the Examination of Water and Wastewater," 16th edition (1985).

[b]Container Types:

P = Plastic (polyethylene)
G = Glass
T = Fluorocarbon resins (PTFE, Teflon™, FEP or PFA)
PP = Polypropylene

[c]Shipping containers (cooling chest with ice or ice pack) should be certified as to the 4°C temperature at the time of sample placement into these containers. Preservation of samples requires that the temperature of collected samples be cooled to 4°C upon collection of sample and during shipment. Field personnel will check the temperature in the container at the time of shipping and ice the samples to maintain a cool temperature during shipment. Maximum-minimum thermometers can be placed into the shipping chest to record temperature history. Chain-of-custody forms will include the temperature in the container at the time of shipment and at delivery to the laboratory in addition to in-transit (maximum) temperature, if available.

[d]Sample preservation should be performed immediately upon sample collection. For composite samples, each aliquot should be preserved at the time of collection. When use of an automated sampler makes it impossible to preserve each aliquot, samples may be preserved by cooling to 4°C until compositing and splitting are completed.

[e]When any sample is to be shipped by common carrier or sent through the United States mail, it must comply with the DOT Materials Regulations (49 CFR Part 172). The SCF is responsible for ensuring compliance. For preservation requirements, the Office of Hazardous Materials, Materials Transportation Bureau, Department of Transportation has determined that the Hazardous Materials Regulations do not apply to the following material: Hydrochloric acid (HCl) in water solutions at concentrations of 0.22% by weight or less, with pH less than 2.0 but greater than or equal to 1.0.

[f]Maximum holding time is 24 hours when sulfide is present. Optionally, all samples may be tested with lead acetate paper before the pH adjustment to determine if sulfide is present. If sulfide is present, it can be removed by adding of cadmium nitrate powder until a negative spot test is obtained. The sample is filtered and then the pH is adjusted to 12 with NaOH.

[g]Based on the requirements for detection monitoring (40 CFR 265.93), the owner/operator must collect a sufficient volume of ground water to allow for the analysis of four separate replicates.

[h]Do not allow any headspace in the container.

[i]For samples from nonchlorinated drinking water supplies, concentrated H_2SO_4 should be added to lower sample pH to less than 2. The sample should be analyzed within 14 days.

[j]Use ascorbic acid only in the presence of oxidizing agents.

CONTAINERS FOR AQUEOUS WASTE SAMPLES[a]

Analyte	Sample Container	Sample Volume	Preservative[b,c]	Holding Time(days)
Hazardous Substance List (HSL) Volatile	G vials (2)	40 ml	Ice	14
HSL Base/Neutral/ Acid[d]	Amber G	1 l	Ice	7/40[e]
HSL Pesticide/PCB	Amber G	1 l	Ice	7/40[e]
HSL Inorganic[f]	P,G	1 l	pH<2,w/HNO_3	180
Non-HSL Metals[g]	P,G	1 l	pH<2,w/HNO_3	180
Cyanide	P,G	0.5 l	pH>11,w/NaOH	14
pH[h]	P,G	N/A	None	N/A
Specific Conductivity[h]	P,G	N/A	None	N/A
Temperature[h]	P,G	N/A	None	N/A
Dissolved Oxygen[h]	G	N/A	None	N/A
Total Dissolved Solids (TDS)	P,G	0.1 l	Ice	7
Total Suspended Solids (TSS)	P,G	0.1 l	Ice	7
Total Phosphate	P,G	1 l	Ice, pH<2, w/H_2SO_4	28
Chloride, Sulfate	P,G	1 l	Ice	28
Carbonate/ Bicarbonate[i]	P,G	1 l	Ice	14
Nitrate	P,G	1 l	Ice	2
Hexavalent Chromium	P,G	1 l	Ice	24

[a]Reference:

1. EPA (U.S. Environmental Protection Agency) 1986. "Test Methods for Evaluating Solid Waste," Report EPA SW-846 (3rd edition). Washington, D.C.

[b]All samples, with the exception of those for total metals, will be filtered within four hours of sample collection and preservatives will be added to the filtrate as specified.

[c]All samples will be kept at 4°C after arrival at the Laboratory.

[d]The HSL base/neutral/acid fractions analytical parameters are the HSL semivolatiles.

[e]Extract within 7 days; analysis within 40 days of extraction.

[f]Includes cesium, molybdenum, and strontium, which are non-HSL metals, but are analyzed using the same methods.

[g]Includes Target Analyte List (TAL) Metals

[h]Field measurements.

[i]These are reported as carbonate and biocarbonate alkalinity.

PRESERVATION PLAN FOR SOIL/SEDIMENT SAMPLES

Analyte	Sample Volume (mL)	Sample Container[f]	Method	Preservative	Holding Time (days)
Volatile Organics	5	40-ml vial (2) with Teflon™-lined silicon rubber septum	Ref. 2	Ice	14
Base/Neutral/Acid Extractable Organics	10-30	Amber G, 1 l	Ref. 3	Ice	7/40[a]
Organochlorine Pesticide/PCB	10-30	Amber G, 1 l	Ref. 4	Ice	7/40[a]
HSL Inorganic[b]	200	P, G, 1 l	Ref. 5	Ice	180
Non-HSL Metals[c]	200	P, G, 1 l	SW-846	Ice	180
Reactivity	---	Amber G	Ref. 6	Ice	N/A
Chloride	20	G, 1 l	EPA 300.0[d]	Ice	N/A
Sulfate	20	G, 1 l	EPA 300.0[d]	Ice	N/A
Nitrate	20	G, 1 l	EPA 300.0[d]	Ice	N/A
Cyanide	200	G, 1 l	Ref. 1	Ice	14
Hexavalent Chromium	100	G, 1 l	S.M. 312b[e]	Ice	1

[a]Extract within 7 days; analysis within 40 days of extraction.

[b]Includes cesium, molybdenum, and strontium, which are non-HSL metals, but are analyzed using the same methods.

[c]Includes Target Analyte List (TAL) metals

[d]Soil/sediments will be leached with laboratory reagent water (20 grams (g) soil to 50 ml water) and water extract will be analyzed using the procedure in "Methods for Chemical Analysis of Water and Wastes," 1983; EPA 600/4-79-020.

[e]Soil/sediment will be leached with laboratory reagent water (5 g soil and 100 ml of water) by shaking for 2 hours, and the water extract will be filtered and subsequently analyzed. This is in accordance with method 312B in Standard Methods for the Examination of Water and Wastewater, 16th Edition, 1985.

[f]Container types:
P = Plastic (polyethylene)
G = Glass

Method References

Ref. 1. Method 9010 - "Test Methods for Evaluating Solid Wastes," EPA report EPA-SW-846, Office of Solid Waste and Emergency Response, Washington, D.C. 20460, Revised September 1986.

Ref. 2. Method 8240 - "Test Methods for Evaluating Solid Wastes," EPA report EPA-SW-846, Office of Solid Waste and Emergency Response, Washington, D.C. 20460, Revised September 1986.

Ref. 3. Method 8270 - "Test Methods for Evaluating Solid Wastes," EPA report EPA-SW-846, Office of Solid Waste and Emergency Response, Washington, D.C. 20460, Revised September 1986.

Ref. 4. Method 8080 - "Test Methods for Evaluating Solid Wastes," EPA report EPA-SW-846, Office of Solid Waste and Emergency Response, Washington, D.C. 20460, Revised September 1986.

Ref. 5. Method 6010 or 7000 Series Methods - "Test Methods for Evaluating Solid Wastes," EPA report EPA-SW-846, Office of Solid Waste and Emergency Response, Washington, D.C. 20460, Revised September 1986.

Ref. 6. Method 9010 or 9030 Series Methods - "Test Methods for Evaluating Solid Wastes," EPA report EPA-SW-846, Office of Solid Waste and Emergency Response, Washington, D.C. 20460, Revised September 1986.

SAMPLE CONTAINERS FOR WASTE[a]

Waste Type	Recommended Container	Closure	Analysis
Photosensitive wastes: 1,000 or 2,000 ml	Amber HDPE[b] or amber glass caps with Teflon™ liners for glass bottles	Teflon™ caps for HDPE bottles; Bakelite	Waste characterization per 40 CFR Part 261
Pesticides: hydrocarbon chlorinated; hydro-carbons; petroleum distillates	Wide-mouth, borosilicate glass bottles 1,000 or 2,000 ml	Bakelite caps with Teflon™ liner	Waste characterization per 40 CFR Part 261
Oil wastes	HDPE bottles, wide mouth, 1,000 or 2,000 ml	Teflon™ caps	Waste characterization per 40 CFR Part 261
Strong alkali or hydrofluoric acid	HDPE bottles, 1,000 ml	Teflon™ caps, wide mouth	Waste characterization per 40 CFR Part 261
Aqueous waste--characterization of organics	Borosilicate glass bottles 1,000 or 2,000 ml	Caps with Teflon™ liner	Waste characterization per 40 CFR Part 261
Solids (sludge, soils, and granular)	8-oz wide-mouth glass bottle	Bakelite caps with Teflon™ liners	Waste characterization per 40 CFR Part 261

[a]References

1. Title 40 CFR Part 261.

2. EPA (U.S Environmental Protection Agency) 1986. "Test Methods for Evaluating Solid Waste," Report EPA SW-846 (3rd edition). Washington, D.C.

[b] High Density Polyethylene (HDPE).

PRESERVATION PLAN FOR SOIL/SEDIMENT WASTE SAMPLES

Analyte	Sample Container	Sample Volume	Preservation	Holding Time (days)
HSL Volatile	40 ml vials (2)	5 g	Ice	14
TCLP Volatile	40 ml vials (2)	5 g	Ice	14
HSL Base/Neutral/ Acid[a]	Amber G	10-30 g	Ice	7/40[b]
TCLP Semivolatiles	Amber G	10-30g	Ice	7/40[b]
HSL Pesticide/PCB	Amber G	10-30 g	Ice	7/40[b]
TCLP Pesticides/ Herbicides	Amber G	10-30g	Ice	7/40[b]
HSL Inorganic[c]	P,G	200 g	Ice	180
Non-HSL Metals[d]	P,G	200 g	Ice	180
TCLP Metals	P,G	200g	Ice	180
Reactivity	Amber G	100 g	Ice	N/A
EP Toxicity	Amber G	100 g	Ice	N/A
Chloride	G[e]	20 g	Ice	N/A
Sulfate	G[e]	20 g	Ice	N/A
Nitrate	G[e]	20 g	Ice	N/A
Cyanide	G	200 g	Ice	14
Hexavalent Chromium	P,G[f]	1,000 g	Ice	24

[a]The HSL base/neutral/acid fractions analytical parameters are the HSL semivolatiles.

[b]Extract within 7 days; analysis within 40 days of extraction.

[c]Includes cesium, molybdenum, and strontium, which are non-HSL metals, but are analyzed using the same methods.

[d]Includes Target Analyte List (TAL) Metals

[e]Soil/sediments will be leached with laboratory reagent water (20 g soil to 50 ml water) and water extract will be analyzed using referenced procedure. Procedure references: "Methods for Chemical Analysis of Water and Wastes," 1983; EPA 600/4-79-020.

[f]Soil/sediment will be leached with laboratory reagent water (5 g soil and 100 ml of water) by shaking for 2 hours. The water extract is filtered and subsequently analyzed. This is in accordance with method 312B in "Standard Methods for Examination of Water and Wastewater," 15th Edition, 1985

EQUIPMENT AND SUPPLIES CHECK LIST FOR SAMPLE CONTAINERS AND PRESERVATION

Forms

_____ Sample Collection Logs

_____ Daily Activity Log

_____ Chain-of-Custody/Request for Analysis Form

Sample Containers, as appropriate

_____ Narrow-mouth amber glass bottles with Teflon™-lined caps (0.5, 1, and 2 liters)

_____ Amber glass vials with Teflon™ septa (40 ml)

_____ 250-ml sterile bottle

_____ Wide-mouth polyethylene bottles (0.5, 1, and 2 liters)

_____ New or cleaned polyethylene narrow-mouth bottles (1 l,.10 l, 500 ml, 125 ml, and 60 ml)

Sampling Materials

_____ Ballpoint pen (indelible dark ink)

_____ Felt-tip marker pen (indelible dark ink)

_____ 1-14 pH indicator paper

_____ Ascorbic acid crystals

_____ Disposable surgical gloves (latex, PVC, other suitable plastic, or rubber)

_____ NaOH pellets

_____ Disposable wipes

_____ Crystalline $Na_2S_2O_3$

_____ Methanol and deionized water in Teflon™ wash bottles

EQUIPMENT AND SUPPLIES CHECKLIST FOR SAMPLE CONTAINERS AND PRESERVATION (Continued)

_____ Concentrated HNO_3, H_2SO_4, and HCl

_____ Temperature probe

_____ Clipboards

_____ Deionized water

_____ Duct tape

_____ Wooden tongue depressors

_____ Aluminum foil

_____ Teflon™ tape

_____ Paper towels

Shipping Materials (acquire from Sample Coordinator Facility)

_____ Cardboard boxes

_____ Ice

_____ Blue Ice or equivalent

_____ Insulated coolers

_____ Heavy-duty poly bags and ties

_____ Strapping tape

_____ Plastic trashcan liners

_____ Canvas bags

_____ Parafilm

_____ Padding for packaging of samples

_____ Ziplock® bags

_____ Bubble pack

_____ Unique sample sticker sheets

_____ Chain-of-Custody/Request for Analysis forms

EQUIPMENT AND SUPPLIES CHECKLIST FOR SAMPLE CONTAINERS AND PRESERVATION (Continued)

_____ Sample labels

_____ Custody seals or custody tape

_____ Other equipment specified in EPA Methods, as needed

Los Alamos National Laboratory **Environmental Restoration Program** **Standard Operating Procedure**	No: LANL-ER-SOP-01.03 Rev: 1

HANDLING, PACKAGING AND SHIPPING OF SAMPLES

	(Print Name)	(Signature)	(Date)
Prepared by	PATRICIA M. TILLERY	Patricia M Tillery	3/21/94
Quality Review by	DONNA L WILLIAMS	Donna L Williams	3/22/94
Technical Review by	Merlin C. Wheeler	M. C. Wheeler	3/22/94
PM Approval	DAVID McINROY	D. McInroy	4/20/94
QPPL Approval	LAWRENCE A. SOUZA	L. A. Souza	4/19/94

Effective Date: 5/5/94

Handling, Packaging and Shipping of Samples

Table of Contents

1.0 PURPOSE 2

2.0 SCOPE 2

2.1 Applicability 2
2.2 Training 2

3.0 DEFINITIONS 2

4.0 BACKGROUND AND/OR CAUTIONS 3

5.0 EQUIPMENT 3

6.0 PROCEDURE 3

6.1 Non-Hazardous or Environmental Samples 4
6.2 Hazardous Samples 5
6.2.1 Non-Radioactive Samples 5
6.2.2 Radioactive Samples 6

7.0 REFERENCES 7

8.0 RECORDS 8

9.0 ATTACHMENTS 8

Handling, Packaging, and Shipping of Samples

1.0 PURPOSE

This procedure describes handling, packaging, and shipping of samples collected for the Environmental Restoration (ER) Program. After preparation, the samples are transported to the radiation control (rad) van, chemical analysis (chem) van, or the Sample Coordination Facility (SCF) at TA-59 or TA-35 over public-access roads.

2.0 SCOPE

2.1 Applicability

This procedure is applicable to all ER, rad van, and chem van activities that involve the handling, packaging, or shipping of samples.

2.2 Training

Rad van and chem van personnel, the field team leader (FTL), and field team members must be familiar with the objectives of sample handling, packaging, and shipping and must document that they have read and understood this procedure as well as the other procedures in LANL-ER-SOPs, Section 1.0, General Instructions.

The packaging and transportation of Department of Transportation (DOT)-hazardous materials (including samples and supplies such as acids or gasoline) requires a field team member as well as rad van and chem van operators that are trained according to the Los Alamos National Laboratory (LANL) designation, Driver III. Contact BUS-6 for specific information on training requirements.

Packaging hazardous or radioactive samples requires more extensive training. Contact the training office of BUS-6 for further information if it is necessary.

3.0 DEFINITIONS

A. Environmental samples: Air, soil, water, or other media samples that are collected from streams, wells, and soils or other locations and are not expected to exhibit properties classified by DOT as hazardous.

B. Hazardous samples: Samples of on-site air particulates, soil, or water and materials collected at waste sites that are known or thought to meet the definition of a hazard class as defined in 49 CFR 171.8. In this SOP, "hazardous" does <u>not</u> refer to Resource Conservation Recovery Act (RCRA) hazardous wastes unless so stated.

C. ORM-D material: Other Regulated Material such as a consumer commodity, which although otherwise subject to the regulations of Subchapter C of 49 CFR 100, presents a limited hazard during transportation due to the form, quantity, and packaging. It must be a material for which exceptions are provided in the 49 CFR 172.101 Table.

D. Radioactive material: Any material having a specific activity greater than 2 nanocuries per gram (nCi/g), is the activity per unit mass of the material and in which the radionuclide is evenly distributed. (This is a DOT definition.)

4.0 BACKGROUND AND/OR CAUTIONS

In general, samples taken for the ER Program are expected to have low concentration of potential contaminants, although higher concentrations will be present in some cases. These low-concentration samples that do not satisfy the DOT hazard class definitions are classified as environmental samples and are thus not subject to DOT regulations. Historical data, knowledge-of-process, and field-screening results will assist the team members in making decisions as to whether a sample can be designated as "environmental" or need to be treated as a DOT hazardous material.

The samples are handled according to good field practice for environmental samples and according to regulations for hazardous samples. During shipment of samples, the sample integrity must be maintained. The health and safety of people and the environment must be protected from detrimental effects of hazardous materials if the samples are hazardous materials.

This SOP directs the preparation for shipping of environmental and sanitary waste samples. For DOT hazardous samples, including radioactive samples, this SOP guides the field team members to appropriate assistance.

All sample collection must be coordinated with the SCF coordinator for numbers and types of samples, analyses required, schedule for collection, numbers of containers required, and all other pertinent preparation information. The SCF staff schedules chemical analyses in cooperation with participating commercial and CST-9, Health and Protection Chemistry Group, analytical laboratories.

All samples collected for analysis are transported either to the rad van, chem van, or SCF for analytical services. A sample custodian will review each sample for proper sample size, container, preservative, and labels. The custodian documents any discrepancies in these areas and notifies the FTL of the possible consequences of these discrepancies and possible corrective actions. The custody of samples is then transferred to SCF.

A final data package is to be sent to the SCF staff for review by the participating laboratory. After the data have been validated, the report containing the chemical analyses will be released to the Operable Unit Project Leader (OUPL) and transferred to the ER Program's information management computer system.

5.0 EQUIPMENT

N/A

6.0 PROCEDURE

A. Classify samples collected at a site as either environmental (non-hazardous) or hazardous (including radioactive) samples according to the DOT requirements. Preliminary classification must be made in the field to ensure that the samples are transported on public-access roads safely and according to regulations. Use Sections 6.1 and 6.2 of this SOP as guides to determine characterization of sample types and applicable packaging requirements for the samples. See Attachment A for a flow chart.

B. Preserve and package samples being collected for the Laboratory's ER Program according to EPA requirements. Refer to LANL-ER-SOP-01.02, Sample Containers and Preservation for guidance.

C. Seal and label samples prior to packing the samples. Ensure that the sample containers and containers used for transport exhibit no external contamination. If necessary, decontaminate the containers according to equipment decontamination procedures.

D. Pack all samples so as to minimize the possibility of breakage during shipment. For all liquid samples, place sufficient absorbent material in the transport container to absorb all contained liquids in the event of a sample container breakage. Seal or lock the package so that any tampering can be readily detected.

E. For transport of hazardous samples or materials, prepare a Hazardous Materials Transfer Form, if applicable. Material must be packaged, marked and labeled in accordance with DOT regulations. The Hazardous Materials Transfer Form can be obtained from BUS-6 Customer Service or SCF. The Hazardous Materials Transfer Form must contain <u>two</u> 24-hour emergency telephone numbers, and a copy of the form must be sent to the Emergency Management Office.

F. After all samples are collected, packaged, and preserved, transport them to the rad van, chem van, or SCF under chain-of-custody. After the samples have been verified with the chain-of-custody documentation, a field team member relinquishes custody to rad van, chem van, or SCF personnel. Rad van or chem van personnel must maintain proper control of the samples in their custody and must reseal the packages containing samples before transporting the samples to the SCF.

G. Deliver samples to the rad van, chem van, or SCF during any legal workday between the hours of 8:00 a.m. and 12:00 p.m. and 1:00 p.m. and 5:00 p.m. Special arrangements can be made with the SCF coordinator for sample delivery during off hours.

H. All comments and any deviations from this procedure must be documented on the Daily Activity Log per SOP-01.04, Sample Control and Field Documentation.

6.1 Non-Hazardous or Environmental Samples

In general, samples that are collected in non-laboratory-use areas (for example, from wetlands, wells, and soils) are not expected to be contaminated with levels of hazardous or radioactive materials high enough to be considered hazardous by DOT. Most sampling is being performed to eliminate the question of contamination at waste management sites, and unless historical data, knowledge of process, or screening results suggest that samples are DOT-hazardous, samples will be transported as non-hazardous. Follow the instructions in Attachment B for packaging and handling environmental samples.

Samples taken from inactive sanitary waste lagoon or septic systems are exempt from all DOT and International Air Transport Authority (IATA) requirements if the sample collector can verify that the samples no longer contain infectious material. See Attachment C for instructions on handling sanitary waste.

6.2 Hazardous Samples

Although the sample media in the ER Program is expected to be soil, water, or sludge, the ER Program may have cause to sample pure product waste or highly concentrated hazardous material. If the amount of the hazardous material in the sample is small, it may be shipped under the DOT limited- or small-quantity exceptions. Small quantities of hazardous material are excepted from the DOT requirements for packaging, shipping papers, labels, and placards for that hazardous material and can be shipped as environmental samples. See exception for small quantities in 49 CFR 173.4. Hazardous materials may be transported under the limited quantity exception if that material has an excepted noted in column 8A of Table 49 CFR 172.101. Actual quantities are given in the reference indicated in Column 8A. The shipment of limited quantities must follow all requirements in the referenced section. Excepted radioactive samples must be accompanied by the specified information indicated in Section 6.2.2 of this document. For assistance, contact BUS-6 (667-4127).

6.2.1 Non-Radioactive Samples

Samples known or expected to be classified as DOT-hazardous materials must be transported according to DOT requirements. After determination of the hazardous characteristics, the selection of the appropriate hazard class and packaging exceptions, if any, can be determined from the list and text presented in 49 CFR 173.2. Attachment D provides a listing of the hazard classes and references for definitions and labeling.

Except for sanitary waste, if a known hazardous sample is to be shipped, BUS-6 must be contacted (667-4127) or SCF for assistance. In addition to the more stringent shipping requirements for hazardous samples, additional training requirements must be met to prepare these samples for transportation.

Samples taken from sanitary waste in active septic tanks or sewage lagoons can be classified as Diagnostic Specimens, which exempt them from special handling during ground transportation by 49 CFR 173.196 (h)(1). However, because these samples may be shipped by air for off-site analysis, the field team members must collect them in

the proper containers with all the appropriate packaging, per IATA. See Attachment D for collection and packaging requirements for sanitary waste samples.

CAUTION: nitric acid, which is used as a sample preservative, has restrictive DOT packaging and transportation requirements, with no exceptions allowed. All regulations in 49 CFR 172.101 and 173.158 must be followed when moving any amount of undiluted nitric acid. However, water samples preserved by nitric acid (or any other additive) are no longer forbidden because of the dilution of the nitric acid according to 49 CFR 172.101(d)(1) and can be packaged and shipped following standard practice for shipping environmental samples.

Shipment of samples preserved by DOT-regulated hazardous materials are also addressed by 40 CFR 136.3, Table II, Note 3.

6.2.2 Radioactive Samples

Most of the samples taken at ER sites will be of activity levels of 2 nCi/g or less. Since DOT only regulates radioactive material with a specific activity greater than 2 nCi/g, most samples taken at ER sites may be handled as an environmental samples unless other regulated hazards are identified or presumed to exist in the sample.

Because the DOT specifies curie amounts, which are not field readings, Attachment E, the summary table for DOT requirements for radioactive material, indicates some approximate disintegrations per minute (d/m). The health physics technician can convert d/m to counts per minute (c/m) for field readings. In this way, the health physics technician will be able to determine if a sample is above 2 nCi/g, approximately 4.4×10^3 d/m.

The LANL Radiation Protection Group (ESH-1) has established action levels of radioactivity in the ER Model Site-Specific Health and Safety Plan to alert the health physics technician of increased requirements for workers protection. Action Levels I and II, noted in Attachment E, are below the DOT-regulated radioactivity. Even though the LANL action levels of radioactivity are not regulated by DOT, special safety precautions must be taken if the activity at a sample location indicates one of the action levels. Be sure to follow all requirements in the Site-Specific Health and Safety Plan.

For materials exceeding the minimum 2 nCi/g activity, the following information applies. Contact BUS-6 for assistance if the health physics technician indicates readings in the following ranges:

A. For materials with activities of greater than 2 nCi/g but less than Type A quantities, DOT identifies a limited-quantity category and specifications for excepted packaging. Radioactive materials in the limited-quantity category may

be transported with minimum restrictions. See Attachment E for a summary sheet of DOT categories and levels of radioactivity in this category. Limited-quantity shipments must have the following label:

> **This package conforms to the conditions and limitations specified in 49 CFR 173.421 for radioactive material, excepted package-limited quantity of material, UN2910.**

B. Type A and B quantity samples are not expected in the ER Program. However, the summary sheet indicates the continuum of shipping requirements for all radioactive material. The summary sheet also indicates d/m for some isotopes that would cause those isotopes to be shipped as Type A material.

Also, be sure to keep the SCF coordinator informed if levels of radioactivity are in the action level or limited-quantity ranges. Refer to Attachment E for activities for these ranges. The SCF coordinator will need to make special arrangements for handling the samples to keep SCF personnel from unknowingly receiving doses of radiation and to keep SCF equipment from contamination.

If 2 nCi/g activity is exceeded, and a package for transportation must be shipped limited quantity, follow the packaging requirements listed in the summary sheet. Contact BUS-6 or SCF for assistance.

7.0 REFERENCES

The following are directly related to this procedure and should be reviewed before field operations:

LANL-ER-SOPs in Section 1.0, General Instructions.

LANL Environmental Safety and Health Administrative Requirements, AR 10-3, Hazardous and Mixed Waste.

40 CFR, 1993. Code of Federal Regulations, Title 49, U.S. Environmental Protection Agency, Parts 100 -149. July 1, 1993, U.S. Government Printing Office, Washington, D.C.

49 CFR. 1994. Code of Federal Regulations, Title 49, U.S. Department of Transportation, Parts 100-199. October 1, 1992. U.S. Government Printing Office, Washington, D.C.

Charlton, Thomas J., P.E., Chief, Standards Division, Office of Hazardous Materials Regulation, Materials Transportation Bureau, DOT, Letter to Myron D. Lair, P.E., Chief, Hazardous Waste Section, ESB, ESD, Region IV, EPA, March 22, 1985.

Dangerous Goods Regulations, International Air Transport Authority. 35th Edition, Effective January 1, 1994.

EPA Region IV, 1991. Standard Operating Procedures and Quality Assurance Manual. Environmental Services Division, Athens, GA.

Los Alamos National Laboratory, 1993. Installation Work Plan for Environmental Restoration. LA-UR-93-3987.

Weitzman, David, "Final Regulation Package for Compliance with DOT Regulations in the Shipment of Environmental Laboratory Samples," Memo from Work Group Chairman, Office of Occupational Health and Safety (PM-273), EPA, April 13, 1981.

8.0 RECORDS

A. Completed Chain-of-Custody/Request for Analysis Form

B. Completed Daily Activity Log

C. Copy of the Hazardous Material Transportation Form, if applicable

It is the responsibility of the OUPL to ensure that records are transmitted to the Records Processing Facility, MS M707.

9.0 ATTACHMENTS

A. Flow Chart for Sample Classification for Shipping

B. Preparation of Environmental Samples for shipment

C. DOT Hazardous Material Classification

D. Preparation of Sanitary Waste Samples for Shipment

E. Range of Material Radioactivities and Corresponding Transportation Requirements

FLOW CHART FOR SAMPLE CLASSIFICATION FOR SHIPPING

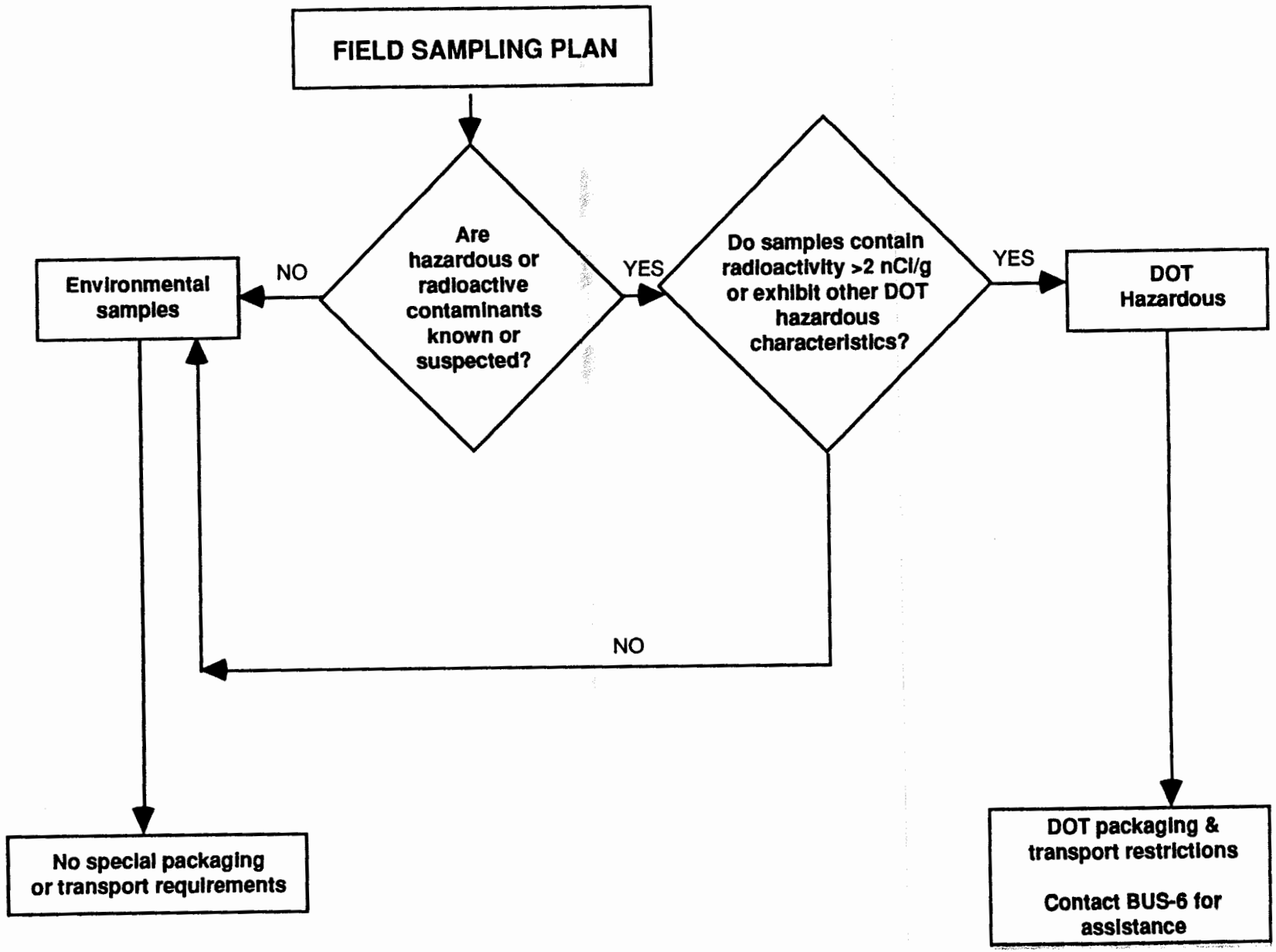

PREPARATION OF ENVIRONMENTAL SAMPLES FOR SHIPMENT

Environmental samples must be prepared for delivery in the following manner:

A. Packaging

1. Before any samples are placed in their delivery containers, the exterior of the sample containers should be decontaminated, if appropriate, and wiped dry.

2. For purposes of controlling leakage, sample containers should be placed, properly labeled and securely sealed, into a polyethylene sealable (e.g., Ziplock®) bag and the bag sealed.

3. If there are multiple sample containers, care should be taken to prevent breakage. Styrofoam "peanuts" or other cushioning material should be used as appropriate to prevent multiple samples from being broken during movement.

4. If the FTL deems it necessary for liquid samples, sufficient absorbent material should be placed in the cooler (or other transport container) to absorb all liquid in the event of a sample container breakage.

5. For samples requiring preservation at 4°C ± 2°C, the samples with ice or Blue Ice™ should be placed in a sturdy ice chest. The presence of ice or frozen Blue Ice™ in an amount approximately equal to the volume of samples is sufficient indication that the samples are adequately cooled.

6. When wet ice is used, it must be placed in sealed containers, such as doubled Ziplock® bags, so water does not fill the cooler as the ice melts.

HINT: If wet ice is to be used, try to purchase and use the "old" ice (bags at the bottom of the store's freezer) because newly delivered ice is not as efficient as ice that has been in the store's freezer for several days.

7. If samples are to be immediately chilled to below 4°C before delivery, they must be totally immersed in a separate cooler containing an ice slush solution that is below 4°C. To ensure this tempature before placing samples in the delivery container, a sample container of the same size filled with distilled water can be checked with a thermometer to determine when the samples have reached the desired temperature. The temperature check must be recorded.

8. Water samples must not be frozen or shipped with dry ice.

9. When using Blue Ice™, samples for volatile organic analysis (VOA) must be wrapped with bubble pads because direct contact between the samples and Blue Ice™ can freeze and burst the 40-ml VOA vial.

10. Completed original Chain-of-Custody/Request for Analysis forms (LANL-ER-SOP-01.04) must be placed in watertight containers and placed inside the shipping container lid.

11. The cooler or other transport container must be completely closed and secured with tape.

B. Marking/Labeling

DOT placards, marking, or labeling are not required for non-DOT regulated environmental samples that are taken to the rad van, chem van, or SCF*. However, per 40 CFR 261.4 (d), all samples must be accompanied by

- The sample collector's name, mailing address, telephone number
- The laboratory's name, mailing address, telephone number
- The quantity of the sample
- The date of shipment
- Description of the sample

Some of the required information is contained on the chain-of-custody form. The first two bulleted items are not on the chain-of-custody form, so a piece of paper containing that information might be preprinted to attach to the chain-of-custody form or otherwise placed with the cooler.

Transport containers (ice chests) will be marked Environmental Samples.

* For samples from septic tanks and lagoons that contain sanitary waste, see Attachment D for packaging and shipping requirements.

PREPARATION OF SANITARY WASTE SAMPLES FOR SHIPPING

These instructions are for the handling and shipping of samples from septic tanks and lagoons that contain sanitary waste.

A. Samples from Inactive Septic Systems and Lagoons

A number of septic systems at the Laboratory have been inactive and have not received sanitary waste in a number of years. If the ER Program is taking samples from these septic systems, the field team manager and the OUPL can conclude that the sample media is not infectious using the following prudent and resource-conservative philosophy:

- The types of human pathogens found in sanitary waste cannot maintain a viable state because conditions of pH, temperature, oxygen and other gases, etc., are not favorable.

- Without the addition of new waste and new pathogens, the samples are not infectious.

If the OUPL and the field team manager decide that samples from inactive sanitary waste systems are not infectious, the decision, with the supporting reasons, should be documented in the Daily Activity Log. These samples can be collected and prepared for transport as soil or water samples and designated as environmental samples.

B. Samples from Active Septic Systems and Lagoons

Samples that come from active sanitary systems and are expected to contain human wastes can be designated as diagnostic samples and are excluded from the specific packaging and shipping requirements per 49 CFR 173.196 (h)(1). However, because some ER Program samples must be shipped by air to meet EPA holding-time requirements, collection and preparation of these samples must satisfy IATA requirements.

According to IATA provisions, these shipments can be identified as Diagnostic Specimens "that have a low probability of containing infectious substances." The field team manager or OUPL may determine the following prudent and resource-conservative philosophy:

- Even though there may be infectious substances in the sample, the count would be low, and the probability of sudden illness or death occurring from contact with the infectious substance is low.

- If this determination is made, the responsible party may designate the diagnostic specimen as having a low probability of containing infectious substances.

- This designation reduces the testing requirements for the containers and increases the allowed amounts in a shipping package.

If the OUPL and the field team manager decide that samples from active sanitary waste systems are diagnostic specimens with low probability for causing illness or death, the decision with the supporting reasons should be documented in the Daily Activity Log.

For ground transportation of these samples, these samples can be packaged and transported as though they were environmental samples. The SCF will be responsible for packaging and shipping the samples, whether by ground or air, to an off-site laboratory. However, if these samples will be shipped by air, certain restrictions will apply.

1. Containers

   For material designated as diagnostic specimens, the total volume per shipping container cannot exceed 500 ml, and the maximum volume per inner container must not exceed 100 ml. Therefore, when SCF indicates that the samples will be shipped by air, they must be collected in containers that are typically smaller than those used for analyses. The sampling team must coordinate with the SCF to address this issue before taking samples because SCF is responsible for packaging the shipment per IATA 650. The SCF will provide sample containers that meet IATA 650.

2. Warning Labels

   Although DOT does not require placarding or labeling, safety of laboratory personnel requires that the samples should be identified as sanitary waste. A label will alert all personnel handling the samples as to the sample's potential hazard. A typical warning label attached to the outside of the transport container might read

   This package contains samples of sanitary waste. If leakage is noted, take all prudent precautions and notify the sampling team that collected the samples.

DOT HAZARDOUS MATERIAL CLASSIFICATION (49 CFR 173.2)

Class No.	Name of Class or Division	49 CFR Definition Reference	49 CFR Label Reference
1	Explosives	173.50	172.411
2	Gases	173.115	172.415, 416 and 417
3	Flammable and combustible liquid	173.120	172.419
4.1	Flammable solid	173.124	172.420
4.2	Spontaneously conbustible material	173.124	172.422
4.3	Dangerous when wet material	173.124	172.423
5.1	Oxidizer	173.127	172.426
5.2	Organic peroxide	173.128	172.427
6	Poisonous and infectious materials	173.132 and 134	172.430, 431 and 432
7	Radioactive Material	173.403	172.436, 438 and 440
8	Corrosives	173.136	172.442
9	Other Regulated Material	173.140	172.446

Los Alamos National Laboratory **Environmental Restoration Program** Standard Operating Procedure	No: LANL-ER-SOP-1.04 Rev: 1

Sample Control and Field Documentation

Prepared by	E. Dow Davidson, Jr. (Print Name)	(Signature)	19 Nov 92 (Date)
Quality Review by	Larry Maassen (Print Name)	Larry Maassen (Signature)	20 Nov 92 (Date)
Technical Review by	John J. Miglio (Print Name)	John J. Miglio (Signature)	11/19/92 (Date)
PM Approval	Robert W Vocke (Print Name)	Robert W Vocke (Signature)	11/20/92 (Date)
QPPL Approval	Karen L Warthen (Print Name)	Karen L Warthen (Signature)	11/30/92 (Date)

Effective Date: 1-5-93

Sample Control and Field Documentation

Table of Contents

1.0 PURPOSE 2

2.0 SCOPE 2
- 2.1 Applicability 2
- 2.2 Training 2

3.0 DEFINITIONS 2

4.0 BACKGROUND AND CAUTIONS 3

5.0 EQUIPMENT 3

6.0 PROCEDURES 3
- 6.1 Sample Identification 3
  - 6.1.1 Unique Sample Bar Code Stickers 4
  - 6.1.2 Sample Labels 4
  - 6.1.3 Sample Collection Logs 5
  - 6.1.4 Master Collection Log 6
  - 6.1.5 Chain-of-Custody/Request for Analysis Forms 8
  - 6.1.6 Custody Seals 10
- 6.2 Field Investigation Summaries 10
  - 6.2.1 Daily Activity Logs 10

7.0 REFERENCES 12

8.0 RECORDS 12

9.0 ATTACHMENTS 12

Sample Control and Field Documentation

1.0 PURPOSE

This procedure describes the steps necessary to document the traceability of samples collected for the Environmental Restoration (ER) Program.

2.0 SCOPE

2.1 Applicability

This procedure is applicable to all ER Program activities involving samples collected for regulatory analysis.

2.2 Training

The Operable Unit Project Leader (OUPL), the Field Team Leader (FTL), Sample Coordination Facility staff, and site workers responsible for collecting samples and preparing documentation should be familiar with the objectives of sample control and documentation. They must document that they have read this procedure and the remaining procedures in Section 1.0, General Instructions of the Los Alamos National Laboratory ER Program Standard Operating Procedures.

3.0 DEFINITIONS

Chain-of-custody: The procedural steps that result in the assurance that a sample has remained in a person's custody from initial collection to final disposition.

A sample is one's custody when the criteria listed below have been satisfied:

- the sample is in one's physical possession, or
- the sample is in one's view at all times, or
- the sample is in one's physical possession and then it was secured in a manner so that it could not be tampered with.

Documentation of the above action provides the evidence that the chain-of custody has been maintained. Chain-of-Custody establishes the traceability of the sample to the location from which it was collected and the data derived from the sample.

4.0 BACKGROUND AND CAUTIONS

All work performed for the ER Program must be documented. Sample control and documentation is necessary to ensure the reliability and defensibility of data and to verify the quality of the work performed in the field. Data collection must be through and accurately documented. Failure to have complete documentation may result in loss of the validity of field work and may have serious legal ramifications.

5.0 EQUIPMENT

N/A

6.0 PROCEDURES

A. Obtain forms and supplies associated with this SOP from the Sample Coordination Facility (SCF).

B. Obtain the ER site ID(s) for the area where sample collection is planned. The site ID is a unique number based upon geographic coordinates that designate an ER Program site. It is obtained from the Facility for Information Management and Display (FIMAD).

C. Make form entries with black indelible ink.

D. Separate forms for media-specific sample collection have been developed for recording explicit data. These forms will be included in the individual Standard Operation Procedures and will be completed when applicable.

E. Documents shall not be destroyed or discarded even if they are illegible or contain inaccuracies that require replacement documents. Any inaccuracies shall be resolved upon discovery by crossing through the error, correcting it on the original document, and initialing and dating the correction. If the correction is not self-explanatory, the individual shall assign a number to the correction and attach a sheet to the original that fully describes the correction that has been performed

6.1 Sample Identification

Forms and labels have been prepared so that identification and chain-of-custody records can be maintained and sample disposition can be controlled. These items are obtained from the SCF. The labels and forms associated with this procedure are listed below. Examples are provided as examples A through G.

- unique sample bar code stickers
- sample label stickers
- sample collection logs
- master sample collection log
- chain-of-custody/request for analysis forms
- custody seals
- Daily Activity Log

6.1.1 Unique Sample Bar Code Stickers

1. The ER Program has established a sample identification system that uses preprinted self adhesive labels (Attachment A). The FTL will obtain a sufficient supply of sheets of labels to accommodate the total samples required by the OU-specific Sampling and Analysis Plan. Each sheet contains four sets of 20 unique sample bar code labels. Each set consists of one unique number. Each label displays a unique seven-character alphanumeric identifier in both human readable and bar code form.

2. Only one unique bar code sticker is used per sample even if the sample has more than one sample container. Apply the same sample number to each container of the same sample.

3. One label is affixed to each of the following:

   •sample container lid (except 40 ml vials with Teflon ™ septa);
   •sample label (containers may be labeled before going to the field);
   •chain-of -custody/request for analysis form;
   •sample collection log; and
   •master sample collection log.

4. Discard any remaining stickers.

6.1.2 Sample Labels

1. Sample labels (Attachment B) provide information regarding the samples. Preprinted sample labels will be provided by the SCF. Alternatively any label displaying the complete information as listed below is acceptable.

2. Each label should be completed with the following information:

   - Operable Unit;
   - Technical Area;
   - unique sample bar code sticker;
   - date and time of collection;
   - Sample location;
   - Site ID obtained from the Facility for Information Management, Analysis, and Display (FIMAD);
   - type of analysis requested;
   - preservative (if any); and;
   - signature of collector.

3. Ensure that completed sample labels are affixed to the sample containers immediately following the sampling activity if not previously done.

6.1.3 Sample Collection Logs

1. The FTL is responsible for the completion of the Sample Collection Log (Attachment C) and will record all information pertinent to the collection of sample media on this log.

2. A sample collection log will be completed for each sample collected.

3. The logs will be paginated for each sheet prepared on a single day (i.e., if a total of 24 pages is completed, number 1 of 24, 2 of 24, etc.).

4. Information will be supplied for all spaces provided on the Sample Collection Log. If the space is not applicable to a specific project, write N/A. Record additional information in the comments section.

5. Daily entries on these logs will include:

   - Date and Time: The date and time when the measurement was made in the following formats: DD-MMM-YY (e.g., 01-JAN-92), and the 24-hour clock time (e.g., 0837 for 8:37 a.m. an 1912 for 7:12 p.m.);

   - Sheet Number: Number all sheets that are used consecutively (e.g., 1 of 2, 2 of 2, etc.);

   - Technical Area (TA): Two-digit number indicating the TA in which the sampling activities are being executed;

   - Operable Unit (OU): Four-digit number indicating the OU where sampling activities are being executed;

   - Site Work Plan: The title and number of the site work plan that pertains to the sampling event;

   - Signature: Name and title of preparer;

   - Sample Identification: Affix one unique sample bar code sticker;

   - Control number: A preprinted number from the Chain-of-Custody/Request for Analysis form.

   - Sample Location: General description of sampling location (e.g., borehole HDH-1 by TA-16-03, outfall samples in Mortadad Canyon, etc.).

- Site ID: A unique identifier associated with the geographic coordinate that designates an ER Program site. It is obtained from FIMAD.

- Sample Type: Example descriptions include soil; ground water; surface water; filter air; charcoal tubes; ambient air; personnel air; sludge; drum contents; oil; vegetation; fauna; wipe; sediment, etc. Also include sample collection method (e.g., SUMMA® canister, bailer, Shelby tube, stainless steel scoops, animal traps, etc.)

- Containers Used: Number, volume, and type of containers used (e.g., two 1-liter glass containers).

- Amount Collected: Approximate volume of sample in container.

- Composite Type: If composite samples are taken, identify the type of composite sample (e.g., 24-hour composite, spatial composite).

- Depth of Sample: Description of sample intervals (e.g., depth of sample in feet, distance on transect in feet).

- Weather: Approximate temperature, sun and moisture conditions.

- Any additional field observations/comments, which may include but are not limited to the following:

  sample preservation (e.g., ice, cooled to 4° C, HNO_3);

  calibration procedures for field equipment; or

  results of photoionization detection (PID) and flame ionization detection (FID) in parts per million (ppm).

NOTE: SCF provides pre-cleaned containers.

6.1.4 Master Collection Log

1. The Master Collection Log (Attachment D) is used to track samples from the site to the SCF and to the final laboratory destination. Use of this form is optional. As some sites require numerous samples, this log is a helpful organizational tool.

2. The following information is included on this log:

   - Date: The date (Day-Month -Year) of entry.

   - Sheet Number: Number all sheets that are used consecutively (e.g., 1 of 2, 2 of 2, etc.).

- Technical Area (TA): Two-digit number indicating the TA in which the sampling activities are being executed.

- Operable Unit (OU): Four-digit number indicating the OU where sampling activities are being executed.

- Site Work Plan: The title and number of the site work plan that pertains to the sampling event.

- Signature: Name and title of preparer.

- Sample Identification: Place a unique sample bar code sticker in the box Affix Sample Sticker for each sample included in the master Collection Log.

- Date and Time Collected: The date and time when the sample was collected, made in the following formats: DD-MMM-YY (e.g., 01-JAN-92), and the 24-hour clock time (e.g., 0837 for 8:37 a.m. and 1912 for 7:12 p.m.).

- Sample Type: Example descriptions include soil; ground water; surface water; filter air; charcoal tubes; ambient air; personnel air; sludge; drum contents; oil; vegetation; fauna; wipe; sediment, etc. Also include sample collection method (e.g., SUMMA® canister, bailer, Shelby tube, stainless steel scoops, animal traps, etc.).

- Sample Location: General description of sampling location (i.e., borehole HDH-1 by TA-16-03, outfall samples in Mortadad Canyon).

- Date Samples Shipped: Include the date the samples are shipped to the SCF.

- QC Samples: Number and type of Quality Control Samples.

- Control number: A preprinted number from the Chain-of-Custody/Request for Analysis form coinciding with the first sample collected for that sampling event that will be recorded on the Sample Collection Log for the first sample taken.

- Site ID: A unique identifier associated with the geographic coordinate that designates an ER Program site. It is obtained from FIMAD.

6.1.5 Chain-of-Custody/Request for Analysis Forms

1. Chain-of-Custody/Request for Analysis (Attachment E) forms are used to document the integrity of all samples, maintain a record of sample collection, transfer between personnel, shipment, and receipt by the laboratory.

2. Complete a Chain-of-Custody/Request for Analysis form for each sample set at each sampling station. Obtain this three-part form from the SCF.

3. All copies of the Chain-of-Custody/Request for Analysis form will accompany the sample to the SCF. The original (top copy) will be kept by the SCF. The second copy will be given to the ER Records Processing Facility (RPF) and the third copy will be sent to the FTL.

4. Information will be supplied for all blank spaces on the Chain-of-Custody/Request for Analysis form. If the space is not applicable, write N/A.

5. The Chain-of-Custody/Request for Analysis form will contain the following information:

    - Date: The date the Chain-of-Custody/Request for Analysis is filled out.

    - Control Number: A preprinted unique number on each Chain-of-Custody/Request for Analysis form. (Note: Remember to write this number on the Sample Collection Log that coincides with the first sticker, affixed to the Chain-of-Custody/Request for Analysis form.)

    - Technical Area (TA): Two-digit number indicating the TA in which the sampling activities are being executed.

    - Send lab report to: The name and address of the SCF Coordinator to whom the contract laboratory results should be sent.

    - Operable Unit (OU): Four-digit number indicating the OU where sampling activities are being executed.

    - Site Work Plan: The title and number of the site work plan that pertains to the sampling event.

    - OU Contact: OUPL or FTL, as appropriate.

    - Contact Phone No: Give the telephone number of the OUPL or FTL indicated as the OU contact.

- Date Samples Shipped: Include the date that the samples are shipped to the SCF.

- Date Lab Report Required: Give an approximate date that the lab results are needed.

- Field Unique Sample Number/Identification: Sample number/identification for each sample in shipment. This number must be written by hand (you are making 3 copies).

- Date and Time Collected: (for each sample in shipment).

- Indicate if it is a grab sample or composite sample.

- Sample Container: Type of sample container used and volume (e. g, 1 liter glass bottle).

- Matrix: Sample description (e.g., environmental matrix, liquid soil, core, sludge).

- Preservative: Type of preservative used.

- Analysis: Analysis requested for each sample. Also note preferre analytical method if known.

- Remarks: any addition remarks that supply relevant information pertaining to the samples (i.e., condition on receipt, etc.).

- Relinquished by: When the possession of the samples is transferred to the SCF, the individual relinquishing the samples signs his/her name and affiliation and records the date and time on the Chain-of-Custody/Request for Analysis document in the "Relinquished By" box.

- Received by: The individual receiving the samples signs his/her name and affiliation and ensures that the date and time entered by the person relinquishing the samples is correct. The shipping company is not a part of the chain-of-custody procedures. However, the shipping company's waybill number documents the method of transportation. CAUTION: If you do not sign the form in the relinquish block, custody will be broken and you will have to resample.

- Possible Hazard Identification: Indicate if sample(s) is hazardous material and/or suspected to contain high levels of hazardous substances. Check spaces provided for Radiological, Highly toxic Flammable, Skin irritant, Non-hazard, and other.

- Sample Disposal: Indicate what actions will be taken for final disposal of the samples. Check spaces provided for Return to Client, Disposal by Lab, and Archive. If archived, indicate the number of months.

- Comments: Any additional comments are included here.

- Sampling Team: The names (printed) and initials of those field team members involved with the sampling and the name of the FTL. Only these persons are to be involved in the chain-of-custody procedures.

6. The FTL is responsible for shipping the samples to the SCF or the Radioactive Contamination Screening Van and for the completion of the Chain-of-Custody/Request for Analysis form. The FTL will inspect the form for completeness and accuracy.

6.1.6 Custody Seals

1. Custody seals (Attachment F) will be used to ensure samples are not tampered with during their shipment to the SCF.

2. The lid of every sample container will be sealed with custody seal. For 40 millimeter vials, the custody tape will be wrapped around the bottle and lid horizontally and not over the exposed septa.

3. The custody seal for every sample will be initialed and dated by a member of the sampling team.

4. The sealed sample containers will then be hand carried to the SCF or the Radioactive Contamination Screening Van.

6.2 Field Investigation Summaries

Daily Activity Log (Attachment G) forms have been developed for detailed summaries of information pertaining to the field investigation and for recording additional field data. The forms can be obtained from the SCF.

6.2.1 Daily Activity Logs

1. The FTL is responsible for preparing daily field reports that briefly summarize each day's progress.

2. Paginate each sheet of the Daily Activity Log for each day (e.g., 1 of 4, 2 of 4, etc.).

3. Entries on the Daily Activity logs will include:

   - Date: The date and time of the activity made in the following formats: DD-MMM-YY (e.g., 01-JAN-92), and the 24-hour clock time (e.g., 0837 for 8:37 a.m. and 1912 for 7:12 p.m.).

   - Sheet Number: Number all sheets that are used consecutively (e.g., 1 of 2, 2 of 2, etc.).

   - Technical Area (TA): Two-digit number indicating the TA in which the sampling activities are being executed.

   - Operable Unit (OU): Four-digit number indicating the OU where sampling activities are being executed.

   - Site Work Plan: The title and number of the site work plan that pertains to the sampling event.

   - Signature: Name and title of preparer.

   - Comments: The comments section may include, but is not limited to, the following:

     - deviations from approved plans or procedures;

     - a description of general field conditions encountered;

     - special problems;

     - sketches and calculations as they pertain to the job;

     - performance of subcontractors, such as their equipment's suitability and adequacy;

     - names and affiliations of all ER Program personnel on site;

     - supplies and equipment used;

     - when photographs are taken in the field, the time, date, location, roll identification number, picture number on the roll, general compass direction, a description of the subject matter, and the photographer's name;

     - decontamination practices, such as time decontamination is performed and results of equipment inspection after decontamination;

- a description of waste generated as a result of the field investigation; and
- any additional field observations pertinent to the investigation.

7.0 REFERENCES

LANL-ER-SOPs in Section 1.0, General Instructions

8.0 RECORDS

Sample Collection Log
Master Collection Log (optional)
Chain-of-Custody/Request for Analysis Form
Daily Activity log

9.0 ATTACHMENTS

Attachment A - Unique Sample Bar Code Sticker
Attachment B - Sample Labels
Attachment C - Sample Collection Log
Attachment D - Master Collection Log
Attachment E - Chain-of-Custody/Request for Analysis form
Attachment F - Custody Seal
Attachment G - Daily Activity Log

UNIQUE SAMPLE NUMBER STICKERS

XXX0000

EXAMPLE ONLY

SAMPLE LABELS

LOS ALAMOS NATIONAL LABORATORY	
OU _____ TA _____	AFFIX SAMPLE STICKER HERE
LOCATION:	DATE:
SITE ID NO.:	TIME:
ANALYSIS:	PRESERVATIVE:
SIGNATURE:	

EXAMPLE ONLY

Los Alamos National Laboratory Environmental Restoration
SAMPLE COLLECTION LOG

Date: _____ Time (24 hour clock) _____ Sheet _____ of _____

Technical Area _____ Operable Unit _____

Site Work Plan _____

Signature _____

AFFIX SAMPLE STICKER HERE

Control No. _____ Sample Type _____

Sample Location _____ Site ID No _____

Composite _____ Yes _____ No

Composite Type _____

Depth of Sample _____

Weather _____

COMMENTS _____

Containers Used	Amount Collected

EXAMPLE ONLY

LEGEND

1. A sample collection log is to be completed for samples in each sampling interval and reaffix stickers to form when the sample label is prepared.
2. Date: Use DD-MMM-YY; e.g., 01-JAN-91.
3. Time: Use 24-hour clock; i.e.., 1835 for 6:35 PM.
4. All entries on the log are to be completed. If not applicable, mark N/A.
5. Page: Each sample team should number sheet ___ of ___ for the day's activities for all sheets prepared on a single day, i.e., if there is a total of 24 pages, number 1 of 24, 2 of 24, etc.
6. Control No.: obtain from chain of custody/request for analysis form.
7. Sample Location: Use boring or monitor well number, grid location (transect), sample station I.D., or coordinate to physical features with distances. Include sketch in comment section, if necessary.
8. Sample Type: Use the following - soil; water (surface or ground); air (filter, tubes, ambient, personnel); sludge, drum contents; oil; vegetation; wipe; sample.
9. Site ID No. FIMAD supplied unique site designation.
10. Composite Type: i.e., 24-hour, list sample numbers in composite, spatial composite.
11. Depth of Sample: Give units, write out units such as feet.
12. Weather: Approximate temperature, sun, and moisture conditions.
13. Containers Used: List each container type as number, volume, material type (e.g., 2 - 1L glass, 4 - 40 ml glass vial, 1 - 400 ml plastic, 1 - 3 inch steel tube, 1 - 8 ox. glass jar).
14. Amount Collected: Volume of container.

Los Alamos National Laboratory Environmental Restoration
MASTER COLLECTION LOG

Date: _____ Sheet _____ of _____

Technical Area _____ Operable Unit _____

Site Work Plan _____

Signature _____

AFFIX SAMPLE STICKER HERE

Date/Time Collected _____ Sample Type _____
Sample Location _____ Date Samples Shipped _____
QC Samples _____ Control Number _____
Site I.D. _____

AFFIX SAMPLE STICKER HERE

Date/Time Collected _____ Sample Type _____
Sample Location _____ Date Samples Shipped _____
QC Samples _____ Control Number _____
Site I.D. _____

AFFIX SAMPLE STICKER HERE

Date/Time Collected _____ Sample Type _____
Sample Location _____ Date Samples Shipped _____
QC Samples _____ Control Number _____
Site I.D. _____

AFFIX SAMPLE STICKER HERE

Date/Time Collected _____ Sample Type _____
Sample Location _____ Date Samples Shipped _____
QC Samples _____ Control Number _____
Site I.D. _____

AFFIX SAMPLE STICKER HERE

Date/Time Collected _____ Sample Type _____
Sample Location _____ Date Samples Shipped _____
QC Samples _____ Control Number _____
Site I.D. _____

AFFIX SAMPLE STICKER HERE

Date/Time Collected _____ Sample Type _____
Sample Location _____ Data Samples Shipped _____
QC Samples _____ Control Number _____
Site I.D. _____

EXAMPLE ONLY

Los Alamos National Laboratory Environmental Restoration
CHAIN OF CUSTODY/REQUEST FOR ANALYSIS

Date: _____ Control No. **(Pre-printed Number)**

Technical Area _____ Send Lab Report to: _____ MS_____

Operable Unit _____ Site Work Plan _____

OU Contact _____ Date Samples Shipped _____

Contact Phone No. _____ Date Lab Report Required _____

Field Unique Sample #/ID **(Write in Sample ID Number in space below.)**	Date & Time Collected	GRAB	COMP	Sample Container Volume/mat'l	Matrix (Liquid, Soil, Core, Sludge, Etc.)	Preservative	ANALYSIS REQUESTED		REMARKS (Condition of receipt, etc.)
							TEST	METHOD	

Relinquished by: *(Signature)*: Affiliation:	Date:	Relinquished by: *(Signature)*: Affiliation:	Date:	Relinquished by: *(Signature)*: Affiliation:	Date:
Received by: *(Signature)*: Affiliation:	Time:	Received by: *(Signature)*: Affiliation:	Time:	Received by: *(Signature)*: Affiliation:	Time:

POSSIBLE HAZARD IDENTIFICATION:
(Please indicate if sample(s) are hazardous materials and/or suspected to contain high levels of hazardous substances.)
Radiological ____ Highly Toxic ____ Flammable ____ Skin Irritant ____ Non-hazard ____ Other ____

SAMPLE DISPOSAL:
Return to client ____ Disposal by Lab ____ Archive ____ (Indicate number of months): ____

COMMENTS: _____

SAMPLING TEAM (Print Names and initial): _____

WHITE - To accompany samples YELLOW - To [illegible] Processing Facility PINK - FTL Copy SOP 1.04, R0

CONTROLLED DOCUMENT

Los Alamos National Laboratory Environmental Restoration
CUSTODY SEAL

(Example Only)

Los Alamos
Los Alamos National Laboratory
Los Alamos, NM 87545

LAB SAMPLE

DO NOT TAMPER

Date _____

Initials _____

This label is red.

Los Alamos National Laboratory Environmental Restoration
DAILY ACTIVITY LOG

Date: _____ Sheet _____ of _____

Technical Area _____ Operable Unit _____

Site Work Plan _____

Signature _____

Comments:

EXAMPLE ONLY

☐ CHECK HERE IF CONTINUED ON BACK OF THIS SHEET.

Los Alamos National Laboratory **Environmental Restoration Program** Standard Operating Procedure	No: LANL-ER-SOP-01.05 Rev: 0

Field Quality Control Samples

	(Print Name)	(Signature)	(Date)
Preparer:	Sandra Wagner	Sandra Wagner	12-24-91
Quality Review by:	Larry Maassen	Larry Maassen	1-9-92
Technical Review by:	John J. Miglio	John J Miglio	1/29/92
QPPL Approval:	Karen L Warthen	Karen L Warthen	2/27/92
PM Approval:	Robert W Vocke	Robert W Vocke	3-4-92

Effective Date: 3-16-92

Field Quality Control Samples

Table of Contents

1.0 PURPOSE 2

2.0 SCOPE 2
- 2.1 Applicability 2
- 2.2 Training 2

3.0 DEFINITIONS 2

4.0 BACKGROUND AND/OR CAUTIONS 3

5.0 EQUIPMENT 3

6.0 PROCEDURE 3
- 6.1 Background Sample 4
- 6.2 Equipment (Rinsate) Blank 4
- 6.3 Field Blank 4
- 6.4 Field Duplicate (Replicate) 4
- 6.5 Reagent Blank 4
- 6.6 Trip Blank 5

7.0 REFERENCES 5

8.0 RECORDS 5

9.0 ATTACHMENTS 5

Field Quality Control Samples

1.0 PURPOSE

This procedure provides instructions for the collection of field quality control (QC) samples to ensure the reliability and validity of field and laboratory data.

2.0 SCOPE

2.1 Applicability

This procedure is applicable to all Environmental Restoration (ER) Program activities involving the collection of field QC samples.

2.2 Training

The Field Team Leader (FTL) is responsible for monitoring the proper implementation of this procedure and must ensure that field team members collecting QC samples are trained on each sampling procedure to be used. Additionally, the FTL and field team members must document that they have read and understood this procedure and the other procedures in Section 1.0, General Instructions.

3.0 DEFINITIONS

A. Aliquot: A sample aliquot is a portion of a sample that is representative of the entire sample.

B. Background Sample: A sample collected from an area or site similar to the one being studied, but located in an area known or thought to be free from pollutants of concern.

C. Equipment (Rinsate) Blank: Usually organic-free water that is as free of analyte as possible and is transported to the site, opened in the field, and poured over or through the sample collection device, collected in a sample container, and returned to the laboratory.

D. Field Blank: Usually organic-free water solution that is transferred from one container to another at the sampling site and preserved with the appropriate reagents.

E. Field Duplicate (Replicate) Samples: Two separate, independent samples taken from the same source that are collected in such a manner that they are co-located samples, equally representative of the sample matrix at a given location and time.

F. Quality Control Samples: Samples used in a planned check of the operation of a measurement system to obtain a measure of the quality of the data generated.

G. Reagent Blank: Usually an organic-free aqueous solution that is as free of analyte as possible and contains all the reagents in the same volume as used in the processing of the samples. A reagent blank must be carried through the complete sample preparation procedure and contains the same preservation reagent concentrations in the final solution as in the sample solution used for analysis.

H. Trip Blank: Usually an organic-free aqueous solution that is as free of analyte as possible and is transported to the sampling site and returned to the Sample Coordination Facility (SCF) without being opened. A trip blank is usually prepared by the SCF prior to the sampling event.

4.0 BACKGROUND AND/OR CAUTIONS

The majority of ER field efforts require the collection of samples for various quality control purposes. These include the isolation of site effects (control samples), definition of background (background sample), evaluation of field/laboratory methodology (duplicate samples), and assessment of the integrity of the sampling equipment (equipment rinsate blanks).

Sampling procedures outlined in the Sampling and Analysis Plans (SAPs) will be applied to QC samples in the same way they are applied to samples taken in the field. QC sample containers must be labeled and transported, and the samples analyzed in a manner identical to all other samples taken at a site.

5.0 EQUIPMENT

Equipment required for this procedure is only that specified by the Operable Unit (OU) Sampling and Analysis Plans.

6.0 PROCEDURE

The requirements for field QC samples will be evaluated as part of the OU-specific Sampling and Analysis Plan. QC sample requirements for radiological samples differ from those for nonradiological samples. Summaries of these requirements for radiological and nonradiological sampling are provided in Attachments A and B, respectively. The requirements are also provided in the Generic Quality Assurance Project Plan for Resource and Conservation Recovery Act (RCRA) Facility Investigation (LANL, 1991). In addition to the QC samples listed in these summaries, projects may require other types of samples be collected to obtain information concerning the sampling site (e.g., background and control samples). Determine the need for these samples during the preparation activities.

Obtain organic-free water in sealed containers appropriate for transport to the field and in sufficient quantity to prepare the required equipment (rinsate) blanks, field blanks, and reagent blanks. Organic-free water can be acquired at the Sample Coordination Facility (SCF).

Collect each type of QC sample required in the manner defined below.

See Attachment A for frequency of QC samples.

6.1 Background Sample

Based on knowledge of the site and surrounding areas, identify areas and/or bodies of water that are similar to those being studied, but that are known or thought to be free of the contaminates of concern. Collect samples in the contaminate-free locations using the same sampling procedures used for samples from the site being studied.

6.2 Equipment (Rinsate) Blank

After field cleaning the sampling equipment, rinse with organic-free water and collect the rinsate for analysis. Assure that all equipment surfaces that come in contact with the sampling materials are rinsed (e.g., the inside of a bailer).

6.3 Field Blank

In the immediate vicinity of the sample collection activity, pour a quantity of organic-free water into designated sample containers. Follow the sample preservation procedure using the same preservatives and volumes as used with the other collected samples.

6.4 Field Duplicate (Replicate)

At the frequency specified for the type of sample(s) being collected, collect two separate samples from the same source and at the same location and time. Place the samples in separate containers, follow the sample preservation procedure, mark each as a unique sample, and submit both samples for the same analyses.

6.5 Reagent Blank

Pour a quantity of organic-free water that is free of the analyte(s) of interest into designated sample containers. Add to this container all preservation reagents, in the same concentration and volume, as those added to a sample.

6.6 Trip Blank

Request that trip blanks be prepared by the SCF providing the sample containers for the sampling activities and that they be shipped with those containers. The number to be requested depends upon the number and type of samples to be collected. (See Attachments A and B for guidance.) Maintain the trip blanks with the sample containers throughout the sampling event and return them to the laboratory with the collected samples. Do NOT open the trip blanks.

7.0 REFERENCES

The following procedures are directly associated with this procedure and should be reviewed before field operations:

LANL-ER-SOPs in Section 1.0, General Instructions

LANL (Los Alamos National Laboratory), May 1991. "Generic Quality Assurance Project Plan for RCRA Facility Investigations for the Los Alamos National Laboratory Environmental Restoration Program, Los Alamos, New Mexico (current version).

LANL (Los Alamos National Laboratory), November 1991. "Installation Work Plan for Environmental Restoration," Los Alamos, New Mexico (current version).

Sisk, S.W., 1981, "NEIC Manual for Ground Water Subsurface Investigations at Hazardous Waste Sites," EPA Office of Enforcement, National Enforcement Investigations Center, Denver, Colorado. (Sisk, 1981, _____)

8.0 RECORDS

Records to be generated during sampling are listed in the applicable sampling procedures.

9.0 ATTACHMENTS

A. Quality Control Sample Summary for Radiological Samples

B. Quality Control Sample Summary for Nonradiological Samples

Quality Control Sample Summary for Radiological Samples[a]

QC Sample Type	Matrix of Samples	Frequency	Purpose
Field Duplicate	Soil Water	1 per 20 samples 1 per 20 samples (or less)	To evaluate the reproducibility of the sampling technique.
Rinsate Blank	Water used to rinse equipment	1 per 20 samples[b] decontamination	To evaluate procedures.

[a]Generic Quality Assurance Project Plan for RCRA Facility Investigations for the LANL ER Program, May 1991, Sections 5 and 10 (subject to annual update).

[b]Or 1 per shipment if less than 20 samples are collected in a day.

Quality Control Sample Summary for Nonradiological Samples[a]

QC Sample Type	Matrix of Samples	Frequency	Purpose
Field Blank	Soil Water	1 per 20 samples* 1 per 20 samples*	To determine reagent and field contamination from other than sampling matrix.
Reagent Blank	Water	1 per 20 samples*	To determine any contamination from preparation and processing of samples.
Field Duplicate (Replicate)	Soil Water	1 per 20 samples 1 per 10 samples	To evaluate the reproducibility of the sampling technique.
Rinsate Blank	Soil Water	1 per 20 samples* 1 per 10 samples**	To evaluate decontamination procedures.
Trip Blank	Water	1 per shipping container for VOA[b] analyses only.	To determine contamination during storage and transport.

[a]Generic Quality Assurance Project Plan for RCRA Facility Investigations for the LANL ER Program, May 1991, Section 5 (subject to annual update).

[b]VOA - Volatile Organic Compounds

* or 1 per shipment if less than 20 samples are collected in a day.
** or 1 per shipment if less than 10 samples are collected in a day.

Los Alamos National Laboratory **Environmental Restoration Program** Standard Operating Procedure	No: LANL-ER-SOP-1.06	Rev: 0

Management of RFI-Generated Waste

	(Print Name)	(Signature)	(Date)
Prepared by	John W Krueger	John W Krueger	2/26/92
Quality Review by	Larry Maassen	Larry Maassen	27 Feb 92
Technical Review by	Juan Corpion	J Corpion	2/27/92
Technical Review by	David McINROY	James L White for	2/27/92
PM Approval	Robert W Vocke	Robert W Vocke	3-4-92
QPPL Approval	Karen L Wurthen	Karen L Wurthen	3/4/92

Effective Date: 3-16-92

Management of RFI-Generated Waste

Table of Contents

1.0 PURPOSE 2

2.0 SCOPE 2
- 2.1 Applicability 2
- 2.2 Training 2

3.0 DEFINITIONS/ACRONYMS 2

4.0 BACKGROUND AND/OR CAUTIONS 4

5.0 EQUIPMENT 4

6.0 PROCEDURE 5

7.0 REFERENCES 6

8.0 RECORDS 7

9.0 ATTACHMENTS 7

Management of RFI-Generated Waste

1.0 PURPOSE

This standard operating procedure provides decision making guidelines related to the handling and disposition of waste generated by Environmental Restoration (ER) Program field investigation activities.

2.0 SCOPE

2.1 Applicability

This standard operating procedure is intended to cover and is applicable to Resource Conservation and Recovery Act (RCRA) Facility Investigation (RFI) waste management concerns from the point of generation in the field, to the point of acceptance for treatment, storage, and/or disposal by EM-7. It does not apply to corrective action waste. Waste management techniques for cleanup activities should be developed site-specifically and detailed in the corrective action plan or design document. Waste management procedures detailed in the Los Alamos National Laboratory (the Laboratory) Administrative Requirements (ARs) are applicable to all ER program activities.

2.2 Training

The field team leader (FTL) is responsible for ensuring proper implementation of this procedure and must ensure that he/she and all field team members document that they have read and understand this procedure, the other procedures in Section 1.0, General Instructions, and the associated administrative requirements.

3.0 DEFINITIONS/ACRONYMS

A. AR: Administrative Requirements for Environment, Safety, and Health (ES&H). Published in the Los Alamos National Laboratory ES&H Manual, these requirements have been mandated by Laboratory management to ensure that all employees adhere to applicable ES&H laws, regulations, and U.S. Department of Energy (DOE) orders.

B. Disposables: Sanitary Landfill Waste -- Waste that does not contain radioactive materials, hazardous chemicals, explosives, or any combination thereof.

C. Explosives waste: Waste potentially contaminated with explosives, equipment potentially contaminated with explosives, and explosive scrap. This waste must be disposed of through the Fabrication and Assembly Group (WX-3) (see AR 6-6) or by M Division at designated firing sites.

D. Hazardous/chemical waste: Any nonradioactive solid waste intended for treatment or disposal that is corrosive to living tissue, toxic, flammable, reactive, carcinogenic, teratogenic, mutagenic, or infectious, or that in any way presents a potential hazard to human health or the environment, including waste meeting the RCRA hazardous waste definition in Title 40 Code of Federal Regulations (CFR) Part 261.

E. Liquid low-level radioactive waste: Liquid waste contaminated or potentially contaminated with radionuclides.

F. LLW: Low-level Radioactive Solid Waste: Solid radioactive waste that is not classified as high-level, transuranic, or spent nuclear fuel as defined in DOE Order 5820.2A.

G. Mixed Waste: Waste containing both radioactive and hazardous components as defined by the Atomic Energy Act of 1954, as amended, 42 USC 2011 *et seq* and RCRA respectively.

H. Nonradioactive waste: Waste, including equipment and materials, that has been surveyed (both smear and direct if appropriate) and determined to exhibit no added an/or induced radioactivity.

I. RCRA: Resource Conservation and Recovery Act of 1976, as amended by Hazardous Solid Waste Amendments (HSWA) of 1984 and the Medical Tracking Act of 1988.

J. RFI: RCRA Facility Investigation. This is the second step in the RCRA corrective action process and involves waste site and environmental setting characterization to define the nature and extent of contamination and determine the likelihood that contamination will threaten human health or the environment.

K. Solid waste: As defined in RCRA (40 CFR Part 261), any discarded material, either abandoned or recycled, including solids, liquids, semisolids, and contained gases. Solid waste can be hazardous, radioactive, or mixed waste, but source, by-product, and special nuclear material, as defined in the Atomic Energy Act, are exempt from the definition.

L. SWMU: Solid Waste Management Unit as defined in RCRA as amended 1984 Title II Section 1004. Any discernible unit at which solid wastes have been placed at any time, irrespective of whether the unit was intended for the management of solid or hazardous waste. Such units include any area at a facility where solid wastes have been routinely and systematically released.

M. SWMU Aggregate: Solid Waste Management Unit Aggregate -- A group of SWMUs formed by examining geographical relationships, applicable regulations, operating histories, waste types, methods of disposal, transport pathways and other potential relationships.

N. Tritium Waste: Solid waste (see definition "M") that is contaminated with tritium (^3H). Tritium waste that is contaminated with a tritium concentration <20 mCi/m^3 needs no special handling and is treated as low-level radioactive solid waste (LLW). Waste with a tritium concentration >20 mCi/m^3 must be specially packaged as described in AR 10-2.

O. TRU Waste: Transuranic Waste -- Solid Waste that is contaminated with alpha-emitting radionuclides with half-lives >20 years, and in concentrations >100nCi/g.

P. Waste pile: For purposes of this SOP, a waste pile is created during the RFI when an Operable Unit Project Leader (OUPL) or FTL chooses to pile borehole cuttings or sampling residue in lieu of using drums. All waste piles must be stacked on plastic obtained from stock and covered with plastic in a manner that avoids resuspension or runoff of contaminated soil. Waste in piles should be otherwise disposed of upon receipt of representative analytical results. Waste piles will not be used in any area not under institutional controls.

4.0 BACKGROUND AND/OR CAUTIONS

The FTL should consult with EM-7 concerning waste management prior to implementation of field work. EM-7 may be able to provide early guidance concerning the use of waste containers and waste transportation. Simultaneously, the FTL can provide EM-7 with an early estimate of waste to be generated.

To minimize the burden on existing waste management facilities at the Laboratory, it is important that waste generation is minimized. This can be achieved through using good technical judgement concerning the return of waste to SWMUs and through careful waste segregation. Using best scientific judgement, an FTL (in consultation with the OUPL) can anticipate when sampling will occur in areas strongly suspected of contamination and segregate waste generated during this operation from waste generated during the sampling of uncontaminated areas. This can be done both vertically and horizontally. For example, if past contamination has since been covered by 20 feet of clean fill, an FTL could drum or pile borehole cuttings from the upper 20 feet separately from cuttings generated during drilling in the contaminated zone.

5.0 EQUIPMENT

EM-7 can provide 55-gallon drums, labels, plastic liners, and covers, or these items can be obtained from stock.

6.0 PROCEDURE

A. Coordinate with EM-7 concerning waste management prior to field work.

B. The FTL must follow the decision flowchart shown in Attachment A for proper handling of RFI-generated waste.

C. The FTL will manage the collection of RFI Waste in a manner that ensures that radioactive/hazardous waste generation is minimized. Refer to AR-10-8, Waste Minimization, for guidance.

D. Borehole cuttings and other wastes may be returned to the borehole or otherwise disposed of within the boundary of the SWMU aggregate, if the OUPL and FTL jointly determine that some or all of the RFI work will be conducted in an area that it is unlikely to be contaminated, or if they determine that returning borehole cuttings or other waste to the borehole or elsewhere within the SWMU will not increase the likelihood of contaminant migration or increase the cost of eventual corrective action.

E. If it is decided that the waste should be analyzed, refer to EPA's SW-846, Test Methods for Evaluating Solid Waste, for instructions on valid methods of sampling and analysis.

F. If the waste is contaminated based on analytical results, then the FTL must follow the appropriate AR as stated in The Decision Flowchart (Attachment A). If the waste is subject to RCRA (e.g., the waste is either hazardous or mixed), it is critical that the FTL coordinate with EM-7 and EM-8 to implement AR 10-3 (and 10-2 for solid mixed waste) immediately. This includes hazardous waste labeling, establishment of less than 90-day storage areas within three days of the receipt of analytical results, and daily or weekly inspections as required. EM-8 should be contacted immediately for assistance in setting up 90-day storage areas; AR 10-3 provides additional guidance on RCRA compliance for hazardous wastes.

   NOTE: Methanol or other organic rinsates may become subject to RCRA immediately after use. 90-day storage areas for hazardous wastes should be set up immediately upon generation, unless the total volume of accumulated waste does not exceed 55 gallons. Hazardous wastes in quantities less than 55 gallons, or acutely hazardous waste in quantities less than one quart, should be stored in satellite storage areas. Again, EM-8 should be consulted for assistance in setting up such areas.

G. Borehole cuttings, sample residue, and other wastes (e.g., decontamination water) should be drummed or piled (as appropriate) and left on site within demarcated (yellow tape) exclusion zones pending analytical results if contamination is suspected and it is determined unwise to return waste to the borehole or SWMU. Waste piles will not be used in any area not under institutional controls. Drumming of wastes strongly suspected to be contaminated is preferred over piling since this

facilitates labeling and transportation. This is an additional precaution against contaminant migration. All waste piles must be stacked on new plastic obtained from stock and covered with new plastic so resuspension or runoff of contaminated soils is avoided. Waste in piles should be otherwise disposed upon receipt of representative analytical results.

H. The FTL must label segregated waste piles and drums as "pending analytical results" to ensure that representative sample analytical results can be used to determine the fate of the waste. The FTL is responsible for labeling the drums or piles in a manner that maintains a relationship between sample analytical results and drummed or piled waste.

I. Uncontaminated waste can be disposed on site (soil and water in accordance with National Pollutant Discharge Elimination System) or at the Los Alamos county landfill, but only after receiving written approval from EM-8.

J. The FTL should implement the appropriate AR based upon representative analytical results that show the waste to be contaminated. The ARs give action levels and methods of disposal for contaminated waste. In addition, the ARs provide appropriate waste transfer forms and instructions for completion.

K. Upon receipt of the proper forms, EM-7 will arrange for pickup and transport of waste. Contact EM-7 at 665-4000. Always use the current forms.

7.0 REFERENCES

The following references are directly associated with this procedure and should be reviewed before waste management activities are performed.

AR 3-7 Radiation Exposure Control
AR 6-6 Explosives
AR 10-1 Radioactive Liquid Waste
AR-10-2 Low-level Radioactive Solid Waste
AR 10-3 Chemical, Hazardous, and Mixed Waste
AR 10-4 Polychlorinated Biphenyls
AR 10-5 Transuranic (TRU) Solid Waste
AR 10-8 Waste Minimization
DOE Order 5820.2A Radioactive Waste Management
DOE Order 5400.5 Radiation Protection of the Public and Environment
LANL-ER-SOPs in Section 1.0, General Instructions
LANL Health and Safety Manual (Chapter 1 of the Laboratory Manual, Environment, Safety, and Health Supplement)
LANL Hazardous Materials Transportation Manual
40 CFR 261, Identification and Listing of Hazardous Waste
40 CFR 264, Standards for Owners and Operators of Hazardous Waste Treatment, Storage, and Disposal Facilities
55 FR 30798 (July 27, 1990), Corrective Action for Solid Waste Management Units at Hazardous Waste Management Facilities

EPA, 1986. "Test Methods for Evaluation of Solid Waste." U.S. Environmental Protection Agency report EPA-SW-846, Washington, D.C.

8.0 RECORDS

The following completed forms, as applicable, are the records generated during the use of this procedure (forms are available from EM-7, 665-4000 and sample forms can be found in the referenced ARs):

A. The Waste Profile Request (Form 10-3B)

B. The Radioactive Solid Waste Disposal Record, Application for Storage/Disposal, Form 10-2A (as appropriate)

C. The Disposal of Batch Liquid Waste, Form 10-1A (as appropriate)

D. The Hazardous Materials Transfer Form (HMT 1-1)

E. The Chemical Waste Disposal Request, Form 10-3A (as appropriate)

9.0 ATTACHMENTS

A. Decision flow chart for the management of ER Program waste generated during the RFI.

Decision Flow Chart for the Management of ER Program Waste Generated During the RFI

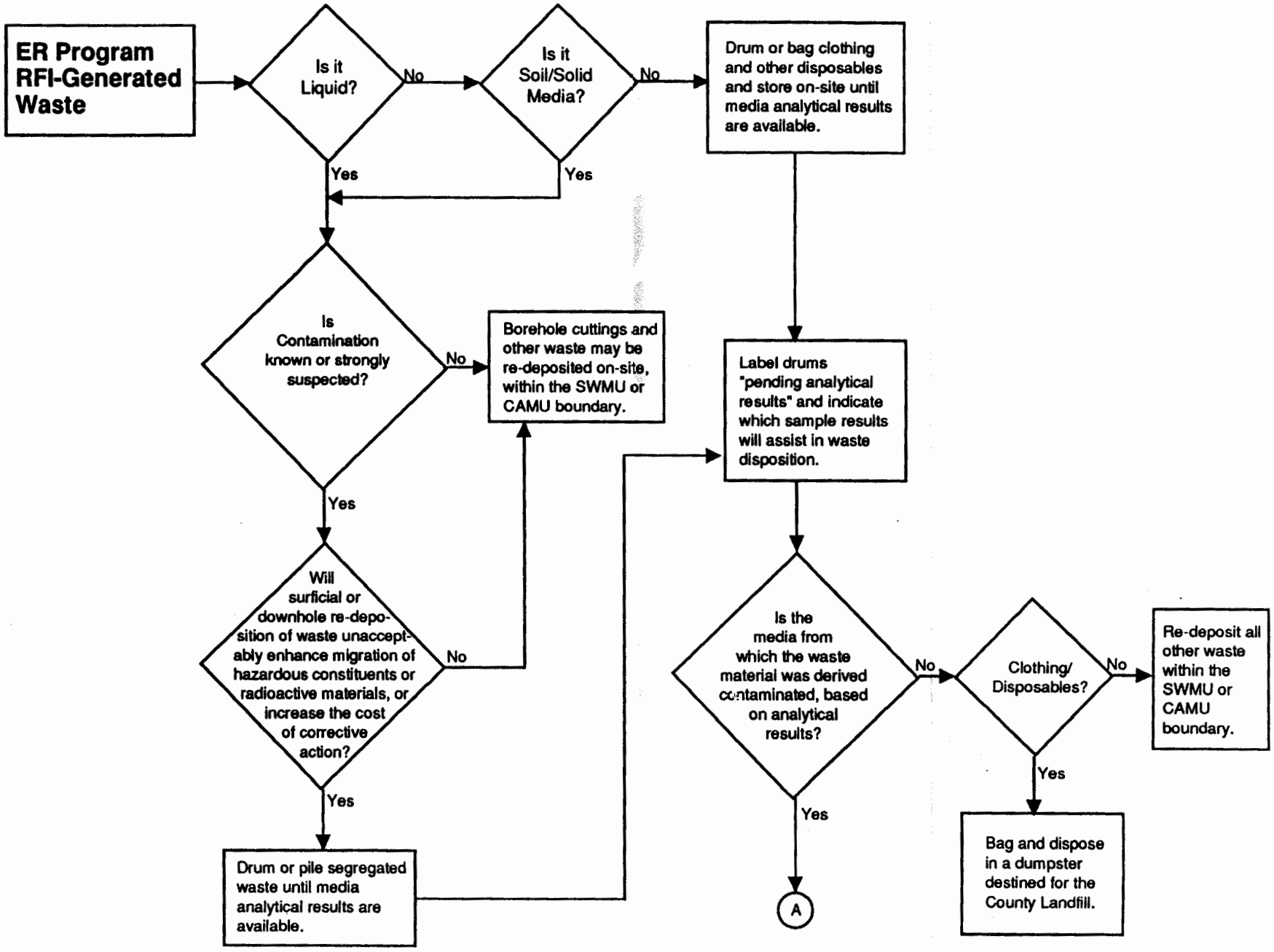

Decision Flow Chart for the Management of ER Program Waste Generated During the RFI (continued)

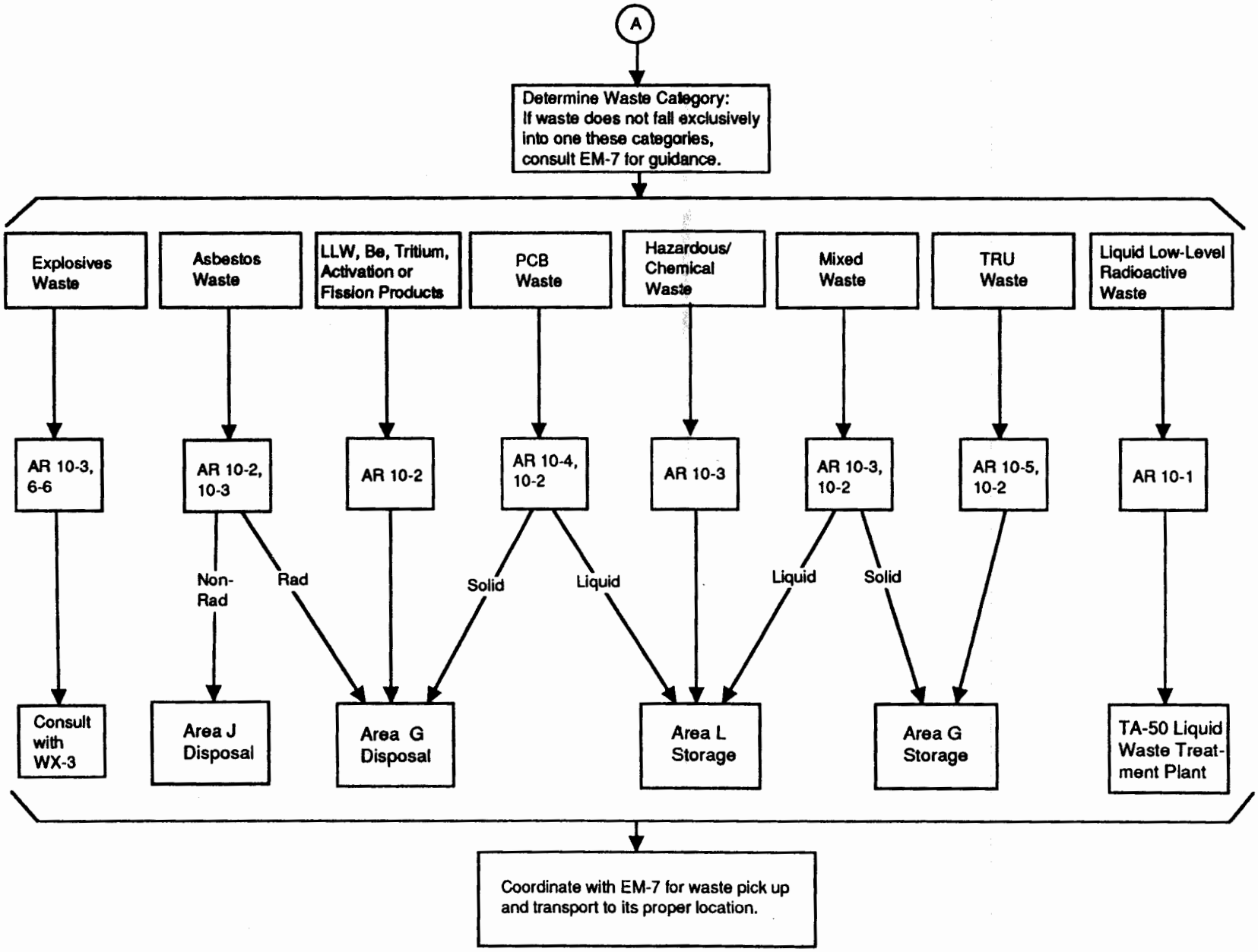

Los Alamos National Laboratory **Environmental Restoration Program** Standard Operating Procedure	No: LANL-ER-SOP-03.01 Rev: 0

Land Surveying Procedures

	(Print Name)	(Signature)	(Date)
Prepared by	DAVID K. O'FLYNN		3/29/94
Quality Review by	Patricia F. Goulding		4/6/94
Technical Review by	ERNEST T PEIFFER		3/30/94
PM Approval	DAVID McINROY		4/20/94
QPPL Approval	LAWRENCE A. SOUZA		4/19/94

Effective Date: 5/5/94

Land Surveying Procedures

Table of Contents

1.0 PURPOSE 2

2.0 SCOPE 2

2.1 Applicability 2
2.2 Training 2

3.0 DEFINITIONS 2

4.0 BACKGROUND AND/OR CAUTIONS 2

5.0 EQUIPMENT 3

6.0 PROCEDURE 3

7.0 REFERENCES 6

8.0 RECORDS 7

9.0 ATTACHMENTS 7

Land Surveying Procedures

1.0 PURPOSE

The purpose of this Standard Operating Procedure (SOP) is to define requirements for land surveying performed for the Environmental Restoration (ER) Program. This SOP incorporates many of the same procedures contained in the LANL Survey Manual, as prepared by the Facilities Engineering Division. This SOP supplements and modifies those procedures.

2.0 SCOPE

2.1 Applicability

This SOP is applicable to all land surveying activities performed under the ER Program. This SOP covers all personnel who perform land surveying and mapping activities related to the ER Program.

2.2 Training

All personnel who perform land surveying must have read the LANL Survey Manual and this SOP. All land surveys conducted for the ER Program at LANL must be performed under the direction and supervision of a professional land surveyor registered in the state of New Mexico.

3.0 DEFINITIONS

Refer to the LANL Survey Manual and Section 6.0 of this SOP for definitions.

4.0 BACKGROUND AND/OR CAUTIONS

This SOP is intended to supplement and modify the procedures listed in the LANL Survey Manual with regard to various special requirements of the ER Program. The LANL Survey Manual serves two basic purposes: 1) to provide standard procedures and methods for conducting surveys and transmitting data, and 2) to provide a standard list of coordinates. Contact Mr. Larry Jones, P.E., of ENG-3 at (505) 667-0142 to obtain copies of the LANL Survey manual.

Because of the sensitive nature of the work, the requirement that sample locations be staked out accurately, and the ability to resurvey sample points based on survey data and field notes, only personnel with experience in land surveying and/or who are registered New Mexico professional land surveyors should use this procedure. Much of the information and direction contained herein requires professional judgment to properly apply.

5.0 EQUIPMENT

All equipment used to perform land surveying for the ER Program must be capable of measuring distances and angles, when in conjunction with established surveying practice, meet or exceed the requirements detailed in the "Minimum Standards for Land Surveying in New Mexico," revised February 2, 1994, or latest edition as published in the New Mexico Engineering and Surveying Practice Act. A copy of the standards is included in the LANL Survey Manual.

6.0 PROCEDURE

Below is a specific listing of each applicable procedure from the LANL Survey Manual, or portion thereof, and its applicability. The listings are supplemented by specific additions required by the ER Program. They are listed by procedure number and title.

100 LANL Procedures

100.1 Purpose and Scope

This is wholly applicable to land surveying under the ER Program.

100.2 Central Point

Parts of this procedure should be supplemented to reflect the unique nature of the ER Program as well as the changes in organization at ENG-3. The first change is to replace the Central Point Contact:

from Mr. Ralph Alarid, Chief of Surveys
(Mr. Alarid has retired from the Laboratory.)

to Mr. Larry Jones, P.E.
Phone: (505) 667-0142

Second, final survey information must also be transmitted to FIMAD (Facility for Information Management Analysis and Display), since they produce the maps and assemble the data the ER Program utilizes. The contact and addresses for FIMAD are as follows:

Mailing Address	For UPS
Ms. Marcia Jones Los Alamos National Laboratory FIMAD Mail Stop B452 Los Alamos, NM 87545	Ms. Marcia Jones Los Alamos National Laboratory FIMAD Building SM 215, Room 259 Bikini Road Los Alamos, NM 87545 Phone: (505) 665-2807

The third party final survey information must be submitted to is

Mailing Address	For UPS
Ms. Renee Archuleta Los Alamos National Laboratory Environmental Restoration Records Processing Facility, MS 707 Los Alamos, NM 87544	Ms. Renee Archuleta Los Alamos National Laboratory Environmental Restoration Records Processing Facility, Trinity Drive Los Alamos, NM 87544 Phone (505) 665-6498

100.3 Definition of Terms Used

This is entirely wholly applicable to land surveying under the ER Program. The following definition needs to be added:

FIMAD: Facility for Information Management Analysis and Display

100.4 Steps of Procedure in Initiating a Field Survey

A. Central Point. This should be modified to include FIMAD. FIMAD's function is to input the survey data into a database, from which maps can be made. FIMAD is also responsible for storing and retrieving survey data related to the ER Program. In addition, all records generated for the ER Program must be sent to the Environmental Restoration Records Processing Facility (RPF).

B. Performance of Field Surveys. Although the LANL Survey Manual does not explicitly require it, all land surveys executed under the ER Program should be performed under the direction of a New Mexico Registered Land Surveyor. This is prudent because of the sensitive nature of the work and the ability to locate sample locations in the future. The involvement of a professional surveyor will ensure that accurate state plane coordinates are calculated and proper field notes compiled. It is also important so that accurate results are ensured.

C. Quality Assurance. The LANL Survey Manual requires a QA check by ENG-3. However, since the ENG-3 survey department has virtually been eliminated, such a QA check is not possible, nor practical. This ER SOP requires that all land surveys be conducted under the direction and supervision of a New Mexico Registered Land Surveyor. Because such a person is licensed, he is required to work to standards established by the state of New Mexico. Additionally, the surveyor is required to perform to standards established by this SOP. Quality Assurance is an inherent factor in meeting these two standards.

D. Final Submittal. In addition to the requirements listed in the Manual, the data must also be submitted to FIMAD and the RPF. Unless the survey involves private property or boundary work, the surveys do not have to be stamped. The only cases where the survey needs to be stamped would involve projects adjacent to private property.

100.5 Survey Procedure Summary

E. Revise QA submittal as noted above.

100.6 Survey Procedure Flow Chart

Revise per Attachment A

200 LANL Survey Standards

200.1 General

This section is wholly applicable.

200.2 Horizontal and Vertical Control

This section is wholly applicable.

200.3. Monumentation

200.3.1 Temporary Control Monuments

This section is wholly applicable

200.3.2 Permanent Survey Monuments

This section is not applicable and should not be included in the SOP for ER land surveying. The ER Program should not set permanent control markers as defined in the Manual and will not need to perform such work.

200.3.3 Benchmarks

This section is not wholly applicable, but it is a source of information.

200.4 Surveys for New and Existing Utilities, Roads and Parking Areas

This section is applicable only to the extent that ER land surveys require existing features to be located. Those parts of the section that deal specifically with installation of new items (roads, utilities, etc.) are not applicable, since the ER Program will not be constructing these items.

200.5 Surveys for Location of Existing Underground Utilities

This section is wholly applicable.

200.6 Construction Staking

This section is not applicable. The ER Program will not be building anything.

200.7 Soil Sampling Points

This section is applicable, although it is recommended that the horizontal accuracies be within 0.1 ft and the vertical accuracy within 1.0 ft. Once the horizontal coordinates have been established, the location should be relatively easy to reestablish if the stake or marker is dislodged or washed away. Additionally, a vertical accuracy of 0.1 ft may not be useful or cost-effective in some instances.

200.8 Building Structures/New Utilities

This section is not applicable.

200.9 Survey Information Submittal

Incorporate the changes outlined above in conjunction with those listed in the manual.

300 Monumentation Standards

This part of the Manual is not applicable, since the ER Program will not be installing permanent control monuments.

400 Monument Coordinates

This section is wholly applicable to the ER Program.

Miscellaneous

The "Minimum Standards for Land Surveying in New Mexico", included in the back of the LANL Survey Manual are wholly applicable. (Standards updated February 2, 1994, or use latest editions.)

7.0 REFERENCES

Los Alamos Facilities Engineering Division Survey Procedures Manual, Revision 1, October 30, 1992

LANL-ER-AP-01.2, R1, Preparation, Review, and Approval of Standard Operating Procedures, Revision 1, November 10, 1992

8.0 RECORDS

The records generated by this SOP and submitted to the ER Records Processing Facility will include the following:

A. Coordinate listings (paper and digital format) in NAD 83 datum, with point descriptions, for all samples and control points surveyed.

B. All applicable drawings (paper and digital format) generated for each survey, if required.

C. Copies of field notes and daily logs.

9.0 ATTACHMENTS

Attachment A - Revised Survey Procedures Flow Chart

100.6 SURVEY PROCEDURE

FLOW CHART

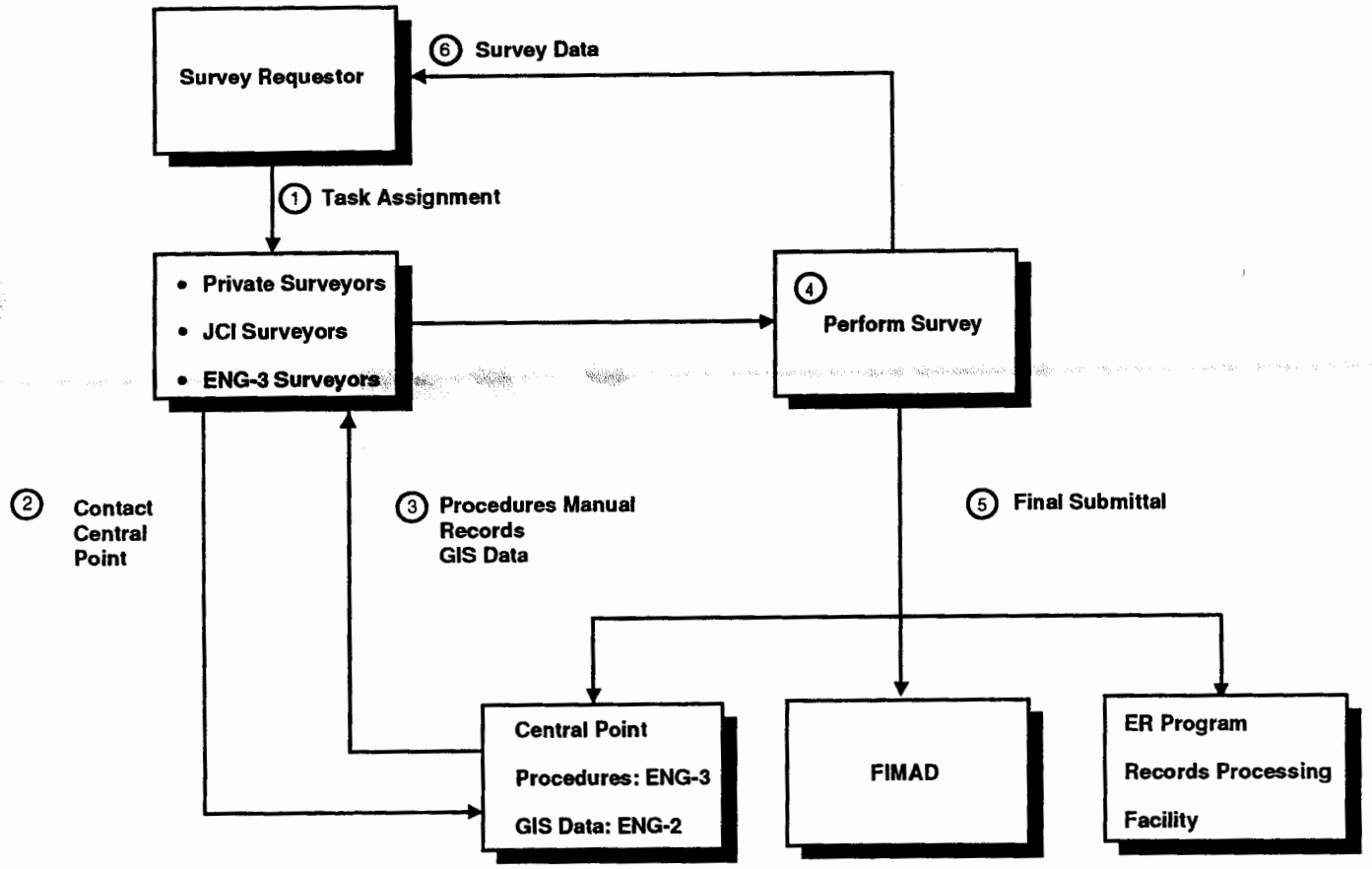

Los Alamos National Laboratory **Environmental Restoration Program** **Standard Operating Procedure**	No: LANL-ER-SOP-03.02 Rev: 1

GENERAL SURFACE GEOPHYSICS

	(Print Name)	(Signature)	(Date)
Prepared by	Allen Coghill	Allen H. Coghill	8/4/93
Quality Review by	Larry Maassen	Larry Maassen	8/18/93
Technical Review by	John Conaway	J. Conaway	1 Sept 9
PM Approval	Robert W Vocke	Robert W Vocke	9-8-93
QPPL Approval	Lawrence A. Souza	L. A. Souza	9/9/93

Effective Date: 9/17/93

GENERAL SURFACE GEOPHYSICS

Contents

1.0 PURPOSE 3

2.0 SCOPE 3
2.1 Applicability 3
2.2 Training 3

3.0 DEFINITIONS AND ABBREVIATIONS 4
3.1 Definitions 4
3.2 Abbreviations 5

4.0 BACKGROUND AND/OR CAUTIONS 5
4.1 Health and Safety Concerns 5
4.1.1 Machinery 6
4.1.2 Electrical Devices 6
4.1.3 Weather 6
4.1.4 Contamination 6
4.1.5 Other Hazards 6
4.2 Overview of Surface Geophysical Techniques 7
4.2.1 Introduction 7
4.2.2 Types of Surface Geophysical Methods 7
4.2.2.1 Electromagnetic Conductivity 7
4.2.2.2 Electrical Resistivity 8
4.2.2.3 Seismic Reflection/Refraction 8
4.2.2.3.1 Seismic Reflection 8
4.2.2.3.2 Seismic Refraction 9
4.2.2.4 Magnetic Methods 9
4.2.2.5 Gravity Methods 10
4.2.2.6 Ground Penetrating Radar 11
4.2.2.7 Self-Potential Methods 11
4.2.3 Calibration 12

5.0 EQUIPMENT 12

6.0 PROCEDURES 13
6.1 Surface Geophysical Technical Specifications 13
6.2 Before Letting the Surface Geophysical Contract 13
6.3 Preparing for the Surface Geophysical Survey 13
6.4 The Surface Geophysical Survey Operation 14
6.5 After the Surface Geophysical Survey 14

7.0 REFERENCES 15

8.0 RECORDS 15

9.0 ATTACHMENTS 16

GENERAL SURFACE GEOPHYSICS

1.0 PURPOSE

This set of related procedures describes the general technologies available to meet project data collection objectives by using non-intrusive surface geophysical methods. The surface geophysical methods described herein may be useful in attaining the following data collection objectives: waste characterization (physical limits in two or more dimensions), waste consistency, buried objects, likely water levels, possible shallow plume distribution, local hydrogeologic conditions, and geologic structural conditions. The seven technologies included are electromagnetic conductivity, electrical resistivity, seismic reflection and refraction, magnetometry, gravity, ground penetrating radar, and self-potential. These technologies all measure bulk earth properties through indirect means. Such technologies are not considered to be "stand alone," but are intended to be utilized in conjunction with direct sampling methods such as test pits, soil test boring, and rock coring. Typically, geophysical techniques are referred to as "surveys" due to the inferred nature of the data obtained.

2.0 SCOPE

2.1 Applicability

These procedures provide instruction for the general planning, selection, and implementation of geophysical surveys that may be considered during investigations of hazardous waste sites. These procedures are applicable to all personnel using geophysical field methods supporting the Environmental Restoration program. Seven methods are discussed from the standpoint of applicability to site investigation.

2.2 Training

The seven methods listed in section 1 require college level instruction in geology and geophysical methods. At least one field team member must be college-trained and have experience in the data collection objectives of surface geophysical methods. One field team member must be well versed in the use, maintenance, and calibration of the equipment to be used. The field team leader is responsible for monitoring the proper implementation of these procedures. All field personnel should document that they have read and do understand these procedures and the procedures in SOP Section 1.0, General Instructions.

Interpretation of the geophysical data acquired requires a significantly higher level of training than that required to implement the survey or to process the geophysical data. The person responsible for interpreting the geophysical data is required to have an M.S. or equivalent in geology, geophysics, geological engineering, or geological sciences.

3.0 DEFINITIONS AND ABBREVIATIONS

3.1 Definitions

A. Electromagnetic conductivity: The ability of a material to conduct electrical time-varying current. In isotropic material, the reciprocal of resistivity.

B. Electrode: A piece of metallic material that is used as an electrical contact with a nonmetal.

C. Electrical Resistivity: Observation of electric fields caused by current introduced into the ground as a means for studying earth resistivity.

D. Ground Penetrating Radar: A system in which short wavelength electromagnetic waves are transmitted, and the back scattered electromagnetic energy from reflecting objects is detected.

E. Magnetometry: The measurement of a component or element of the geomagnetic field at different locations. Such measurements are usually made either to map the broad patterns of the Earth's main field or local anomalies that exist due to variations in magnetization (either natural or man-made).

F. Magnetometer: An instrument for measuring magnetic-field strength. Such instruments typically measure either the vertical component of the field or the amplitude of the magnetic field (often termed the total intensity).

G. Seismic Refraction: The change in direction of a seismic ray upon passing into a medium with a different velocity. Also, a method of mapping geologic structure by using head waves involving energy that enters a high-velocity medium (refractor) near the critical angle and travels in the high-velocity medium nearly parallel to the refractor surface.

H. Seismic Reflection: The energy or wave from a seismic source that has been reflected (returned) from an acoustic contrast (reflector) or series of contrasts within the earth. Also, a method of imaging the subsurface by recording, usually with a multichannel recorder, reflected seismic energy generated by a surface or near-surface seismic energy source.

I. Contractor-Specific Geophysical Procedure: A contractor-supplied, specific procedure or set of procedures for making and interpreting measurements of physical properties of the earth to determine subsurface conditions, usually with an economic or geotechnical objective.

J. Instrumental Drift: A systematic change in the output of a given surface geophysical system due to causes inherent in the system, such as

changing equipment temperature or deterioration of an electronic component.

K. Calibration: A test or tests performed against known standards with a given surface geophysical system to verify that the system is functioning properly and to provide calibration values which allow the data from the system to be used quantitatively.

L. Survey Notes or Data: Information obtained during a surface geophysical survey that is written in a field book or recorded by an electronic or optical recorder.

M. Surface Geophysical Technical Specifications: A set of technical specifications prepared by the Operable Unit Project Leader for a particular type of geophysical survey. Such specifications define the type of geophysical survey to be employed, the precision required of the survey, the data accuracy and repeatability, the data recording format and medium, and so forth.

N. Self-potential or spontaneous potential: The measurement of naturally-occurring, potential differences between points on the earth's surface. Such differences typically arise from either conductivity variations in the earth or fluid flow within the earth.

3.2 Abbreviations

CSGP - Contractor-specific geophysical procedures
EM - Electromagnetic conductivity
ER - Electrical resistivity
GPR - Ground penetrating radar
OUPL - Operable unit project leader
PDCO - Project data collection objectives
QA/QC - Quality assurance/quality control
SGTS - Surface geophysical technical specifications
SP - Self-potential (sometimes called spontaneous potential)
SR - Seismic reflection/refraction
FTL - Field Team Leader

4.0 BACKGROUND AND/OR CAUTIONS

4.1 Health and Safety Concerns

Potential hazards during a surface geophysical operation are associated with machinery, electrical devices, weather, possible contact with contaminants, and other hazards. Some of these hazards are listed below; this list is not intended to be comprehensive. A Laboratory Standard Operating Procedure (SOP) or Special Work Permit (SWP) may be required when certain

instrumentation is used. Refer to the Laboratory's Environmental, Safety, and Health manual for specific requirements relevant to SOPs and SWPs.

4.1.1 Machinery

Ground penetrating radar (GPR), electromagnetic conductivity (EM), and electrical resistivity (ER) sources are somewhat mechanical; and hazards such as tipping, rotating, or moving machinery are present.

Seismic reflection/refraction (SR) sources are mechanical and have hazards such as tipping, high pressures, pulleys, etc. Occasionally, explosive sources are tried; use of such sources must adhere to an approved Laboratory Standard Operating Procedure.

4.1.2 Electrical Devices

Direct electrical hazards - such as electrical shock and burns or electrical fires from sources, electrodes, long wires - are possible, especially using ER.

Indirect hazards-such as failure of portable generators, batteries, high pressure hoses, etc. - are possible using several of the methods discussed herein.

4.1.3 Weather

High winds increase machinery and electrical hazards.

Rain increases electrical shock hazard, especially in ER.

Lightning is a potential hazard, especially where long wires are used along the ground.

Exposure (e.g., heat exhaustion or hypothermia) is a hazard in adverse weather or if work continues beyond normal working hours.

4.1.4 Contamination

All equipment used at a site known or suspected to be contaminated must be monitored for contamination. Site workers should be aware of surface geophysical operations at all times and read and understand the SOPs related to Health and Safety in the Field.

4.1.5 Other Hazards

Fuel fires

Carbon monoxide fumes

Personnel problems such as inadequate training, carelessness or inattention, and impairment from medication, drugs, ailments, etc.

4.2 Overview of Surface Geophysical Techniques

4.2.1 Introduction

In environmental restoration applications, surface geophysical techniques are used for the in-situ determination of physical, chemical, geological, and hydrological parameters in site characterization and waste sites. Surface geophysical measurements can be used to help solve waste cleanup problems as part of initial site characterization, during remediation, and for post-remediation monitoring.

For accurate results to be achieved with a given surface geophysical system, it is essential that the system be calibrated against accepted standards and monitored for any malfunction or significant drift of the system calibration. In addition, the data must be corrected for non-standard conditions (conditions other than those encountered in the calibration).

4.2.2 Types of Surface Geophysical Methods

4.2.2.1 Electromagnetic Conductivity

The EM method provides an indirect means of measuring the electrical conductivity or resistivity of subsurface soil, rock, and groundwater. Electrical conductivity is a function of the type of soil and rock, its porosity, and the fluid composition and saturation. In most cases the conductivity of the pore fluids will be responsible for most of the measurement. Accordingly, the EM method applies both to assessment of natural geohydrologic conditions and to mapping of many types of contaminant plumes. In addition, trench boundaries, buried wastes, drums, and utility lines can be located with EM techniques. The EM technology is versatile; data may be collected either continuously or on a station-by-station (grid) basis.

Note that the EM technique measures earth conductivity by inducing eddy currents into the near-surface materials. The inducing electromagnetic field usually has a frequency close to 10 kHz; commercially available instruments have depth penetrations of roughly 5 meters (the actual depth of penetration depends upon the local conductivity structure).

4.2.2.2 Electrical Resistivity

Electrical resistivity surveys provide information about the subsurface distribution of the ground resistivity. The information can be used to infer groundwater quality and lithologic and geological information. Both horizontal and vertical changes in ground resistivity can be mapped by resistivity surveys. However, in practice, resistivity surveys are mostly used to determine the vertical changes, and lateral resistivity changes are more easily mapped by electromagnetic surveys. Often, electromagnetic and resistivity surveys are used together. ER surveys are normally performed on a station-by-station basis following linear (cross-section) or grid patterns. The ER method applies to assessment of natural geohydrologic conditions and to mapping of contaminant plumes. In some conditions, trench boundaries, buried wastes, and utility lines can be located with ER techniques.

4.2.2.3 Seismic Reflection/Refraction

Seismic techniques have been useful in some instances for assessing subsurface geohydrologic conditions such as depth to bedrock; depth thickness and dip of lithologic units; horizontal and vertical extent of anomalous geologic features (folds, faults, and fractures); the approximate depth to the water table; and, in conjunction with geophysical well log data, the porosity and permeability of lithologic units. Seismic techniques have also been used to delineate the boundaries of subsurface bulk waste trenches and the depth of landfills.

Seismic methods are relatively expensive to use and have poor spatial resolution (rarely < 0.5 meters) when compared to the resolution possible using GPR. However, the useful depth of penetration for seismic methods can be quite large (hundreds of meters), and the method can often provide results when all the other methods discussed herein fail.

4.2.2.3.1 Seismic Reflection

The method of seismic reflection consists of measuring the two-way travel times of compressional waves generated by a surface source and reflected from subsurface interfaces. Depths to each reflecting interface can be inferred from reflection two-way travel times combined with layered velocity information.

Higher subsurface resolution of shallower layers is possible with shallow reflection techniques than with refraction methods (see 4.2.2.3.2). Modern multichannel

engineering seismographs have filtering capabilities that allow later arriving wide-angle reflections to be separated from earlier refraction arrivals.

4.2.2.3.2 Seismic Refraction

The method of seismic refraction consists of measuring the travel times of compressional waves that are generated by a surface source, critically refracted from subsurface interfaces, and received by surface receivers. First-arrival travel times of seismic energy plotted against source-to-receiver distance on a time-distance curve are characteristic of the material through which they travel. The number of line segments on the time-distance plot indicates the number of layers. The inverse slope of a line segment indicates the apparent seismic velocity of a layer.

Seismic velocities obtained from a refraction survey over an area do not always agree with those obtained from a reflection survey over the same area. The differences may be because refraction velocities are obtained from rays traveling parallel to the top of a layer, whereas reflection velocities are obtained from waves traveling perpendicular to the strata at the bottom of the layer.

The technique of seismic refraction has been used to a greater extent than seismic reflection in the subsurface characterization of hazardous waste sites.

4.2.2.4 Magnetic Methods

Magnetometer surveys are used to identify areas of anomalous magnetic field strength. Although natural conditions may cause anomalies, shallowly buried ferrous metal objects (for example, steel drums) exhibit strong anomalies that are rarely confused with natural sources. Generally, any strong anomaly must be considered suspicious and therefore should be examined by direct sampling methods. Magnetic studies are performed on a station-by-station (grid) basis. The data are typically presented by contouring, although maps using colors rather than contours may be used, as well.

The magnetic methods described are applicable to locating buried drums and other ferrous metal objects; locating waste pits that contain ferrous metal; locating underground utilities such as pipelines, cables, tanks, and abandoned well casings; clearing drill sites; and identifying geologic features that exhibit sufficient magnetic contrast.

Ferromagnetic metal location and depth of burial can be inferred from the shape and width of the anomaly. The location of metal using magnetometry facilitates excavation without puncturing metal containers. Underground utilities, which are traceable with magnetics, often lie within loosely filled trenches and may provide permeable pathways for groundwater flow. Magnetometry is used in clearing drilling sites to select locations that are free of drums, detectable underground utilities, and other ferrous objects.

Under certain conditions where sufficient contrast in natural magnetization between geologic units exists, magnetic methods may be useful in identifying geologic structures such as folding, faulting, buried drainage channels, bedrock topography, and igneous intrusions. In addition, if sufficient subsurface contrast exists, it may even be possible to delineate past trench or pit burial sites where nonmetallic materials were disposed.

Interferences from surface metals, fences, powerlines, and other above ground sources - which generally lie closer to the magnetometer sensor than buried targets - may mask the targets. Corrections for these interferences cannot always be done, in which cases data obtained near such interferences must be excluded. Corrections for interferences from geologic conditions and surface objects that have small magnetic moments in comparison to the target may be possible, although such corrections are rarely used.

4.2.2.5 Gravity Methods

Surface gravity measurements are occasionally useful for quantifying the volume of mass deficit or excess. The method is affected by mass density variations and thus can be useful for estimating the volume of a landfill or tank, if the density contrast between the landfill or tank and the surrounding medium is known or can be estimated reliably. The method is not particularly sensitive and typically requires large volumes of material to be missing (or in excess) to be useful.

To be useful for environmental applications, gravity methods require that each gravity measurement location be known precisely, especially its elevation, and that modern, highly precise instrumentation be used. Modern instrumentation is capable of reliably measuring gravity differences as small as 3 microGals; instrumentation that is incapable of such precision is usually not useful for environmental applications.

4.2.2.6 Ground Penetrating Radar

Ground penetrating radar has been demonstrated to be useful in defining landfill cover thickness and the presence of shallow (less than 3 m) burial sites. The method may be utilized on a station-by-station or continuous recording basis, but is more often used in the continuous mode.

GPR data are often used to produce a continuous subsurface profile through the use of a linear strip chart recorder, although digital recording and subsequent processing will probably supplant the older analog methods in the near future. The following is a partial list of major GPR uses related to hazardous waste site investigations.

- Delineate the locations of buried drums, tanks, cables, and pipelines.
- Define the boundary of disturbed versus original ground, such as a landfill or a trench.
- Map water tables.
- Delineate stratigraphic layers such as clay, till, or sand.
- Define natural subsurface features, such as buried stream channels, lenses, and voids (caves).

Although GPR cannot provide definitive information on subsurface conditions, the data are desirable largely because of the very high spatial resolution that is attainable.

GPR instruments are limited with regard to sensitivity, resolution, and penetration. Field experience, published references, and operators' manuals should be used when an evaluation of instrumentation versus capability is desired.

Interpretation of radar data generally becomes more complex as the contrast in electrical properties between background and target areas becomes less. Several small, closely-spaced targets may not be sensed as multiple anomalies, but as one large anomaly.

4.2.2.7 Self-Potential Methods

Self-potential methods utilize naturally-occurring differences in electrical potential between locations on the surface. Historically, such measurements have been used to prospect for metallic ore

bodies, for the electrical conductivity of such bodies is typically much higher than their host rocks; such conductivity variations can give rise to measurable potential differences, which are what the SP method is based upon. In most applications relevant to environmental restoration, however, the SP method is used to measure potential differences resulting from fluid flow in porous materials. Sometimes such potentials are termed *streaming potentials*. In such cases, measurements are usually made over time, rather than as a function of spatial position. As fluids pass through porous media, electrodes (typically porous pots) on the surface are used to measure the time changes in potential differences. Such measurements are then used to infer the rate and geometry of the fluid moving in the porous medium below.

Because the potential differences usually encountered in SP surveys are quite small (often less than 50 milliVolts), voltmeters or other recording devices should be designed to measure very small voltages. Additionally, accurate calibration of such equipment is essential.

4.2.3 Calibration

Accurate calibrations are necessary for the data to be used quantitatively; calibrations also play an important role in monitoring surface geophysical techniques over time. The contractor of the surface geophysical technique must include a set of written calibration procedures for all geophysical equipment involved in quantitative measurements. The surface geophysical contractor is responsible for maintaining full and complete documentation for all calibrations for all equipment and shall provide copies of such records as required by the field team leader (FTL).

Regular calibrations traceable to accepted standards are performed at specified time intervals as well as every time a surface geophysical instrument is modified or repaired. Some instrumentation requires field or job-site calibrations to be performed immediately before and after a geophysical survey.

5.0 EQUIPMENT

The list of equipment required for surface geophysical surveys varies with the contractor and the specific technique(s) being used. Refer to the surface geophysical technical specifications (SGTS) and the contractor-specific geophysical procedures (CSGP) for the required lists.

6.0 PROCEDURES

Operation of the surface geophysical equipment will be in accordance with applicable industry standards and regulatory requirements.

6.1 Surface Geophysical Technical Specifications

Before soliciting bids on any surface geophysical contract for an operable unit, detailed surface geophysical technical specifications must be prepared as part of the project data collection objectives (PDCO). The success of the surface geophysical technique depends to a large degree on these specifications. The SGTS must define the type of surface geophysical system; the techniques to be used; the parameters required; the data precision, accuracy, and repeatability; the sample interval, calibration schedules and requirements; data formats and media; and so forth. The SGTS will be prepared by the operable unit project leader (OUPL) and the FTL responsible for data collection objectives. The Environmental Restoration (ER) Program's principal investigator for surface geophysics should be consulted for assistance in the preparation of the SGTS.

6.2 Before Letting the Surface Geophysical Contract

Specific, detailed procedures depend on the type of surface geophysical system and the geophysical contractor being used. These contractor-specific geophysical procedures must be prepared and submitted by the prospective geophysical contractor for approval by the FTL for the PDCO before the contract is finalized. The CSGP should conform to the general procedures given in this General Surface Geophysics SOP.

6.3 Preparing for the Surface Geophysical Survey

It is the FTL's responsibility to

- ensure that approval for property access has been obtained.
- review the site project data collection objectives and health and safety plan for specific information on field activities. Verify that the surface geophysical equipment meets specifications outlined in the SGTS. Verify that the CSGPs meet the specifications outlined in the SGTS for each surface geophysical method to be applied.
- have the work site cleared of all brush and minor obstructions and have the location of utilities properly staked and identified.
- ensure that the specific surface geophysical equipment to be used has completed a regular calibration within the required time period prior to the surface geophysical operation as specified in the SGTS. Ensure that the calibration(s) met the accuracy requirements given in the SGTS. Ensure that the surface geophysical equipment has completed a regular calibration

subsequent to any repair or modification even if the equipment is not yet due for a routine regular calibration; ensure that the calibration was within acceptable accuracy tolerances as defined in the SGTS.

- ensure that all surface geophysical equipment has been decontaminated prior to use.

- prepare to monitor all surface geophysical equipment used on the site for contamination (Refer to the SOPs in Section 7.0 of this SOP, References, for guidance).

6.4 The Surface Geophysical Survey Operation

It is the FTL's responsibility to

- ensure that surface geophysical survey operations are carried out as specified in the CSGP.

- ensure that all surface geophysical equipment is decontaminated between survey runs.

Because each surface geophysical technique that is to be run must be field-calibrated as required in the SGTS, a field calibration is generally required both immediately before and after a surface geophysical survey is run. The FTL ensures that this process is properly carried out according to the procedures given in the CSGP and that the readings are within acceptable limits as defined in the SGTS.

6.5 After the Surface Geophysical Survey

It is the FTL's responsponsibility to

- ensure that the survey equipment documentation sheets are correct and complete and meet the specifications given in the SGTS. He must sign and date as witness.

- obtain copies of field data in hard copy form (field notes or report) and digital form (for example, magnetic tapes or diskettes), as specified in the SGTS. These field copies are an important part of the data quality record, even though reprocessed data may be submitted by the geophysical contractor at a later time or date.

- ensure that all surface geophysical equipment is accounted for, decontaminated, and ready for transport.

- ensure that the site is restored to pre-survey conditions or as otherwise specified.

7.0 REFERENCES

Contractor-specific surface geophysical survey procedures

LANL-ER-SOPs in Section 1.0, General Instructions

LANL-ER-SOPs in Section 2.0, Health and Safety in the Field

LANL-ER-SOPs in Section 12.0, Curatorial Management Activities

LANL-ER-AP-02.1, LANL ER Records Management Procedure

Surface Geophysical Technical Specifications

Useful reference books include the following.

Bates, R. L., and J. A. Jackson, 1980, *Glossary of Geology*, American Geological Institute, Falls Church, Virginia.

Benson, R. C., R. A. Glaccum, and M. R. Noel, 1983, *Geophysical Techniques and Sensing Buried Wastes and Waste Migration*, U. S. Environmental Protection Agency, Las Vegas, NV.

Sheriff, R. E., 1991, *Encyclopedic Dictionary of Exploration Geophysics*, Society of Exploration Geophysicists, P. O. Box 702740, Tulsa, OK 74170-2740.

U. S. Environmental Protection Agency, 1987, *Compendium of Superfund Field Operations Methods,* EPA/540/P-87/001, Washington, DC.

U. S. Environmental Protection Agency, Region IV, 1991, *Environmental Compliance Branch Standard Operating Procedures and Quality Assurance Manual*, Environmental Services Division, Athens, GA.

8.0 RECORDS

Field reports and copies of field data, signed by the surface geophysical contractor representative and the field team leader or other approved witness as specified in the SGTS.

Digital data on magnetic tape or as otherwise specified in the SGTS.

Completed surface geophysical quality report for each geophysical survey run, as specified in the SGTS. Completing this quality report is the responsibility of the field team leader.

Calibration records as specified in the SGTS.

The OUPL is responsible for transfer of these records to the ER Records Processing Facility in accordance with the Procedure for LANL ER Records Management (LANL-ER-AP-02.1).

9.0 ATTACHMENTS

None

Los Alamos National Laboratory **Environmental Restoration Program** Standard Operating Procedure	No: LANL-ER-SOP-03.04 Rev: 0

Petrography

Preparer:	A. W. Laughlin (Print Name)	(Signature)	9/6/91 (Date)
Quality Review by:	D.E. BROXTON (Print Name)	(Signature)	9/9/91 (Date)
Technical Review by:	W.S. BALDRIDGE (Print Name)	(Signature)	9/10/91 (Date)
QPPL Approval:	Larry Maassen (Print Name)	(Signature)	9/16/91 (Date)
PM Approval:	Robert W Vocke (Print Name)	(Signature)	9/16/91 (Date)

Effective Date: 3-14-92

PETROGRAPHY

1.0 PURPOSE

The purposes of this procedure are (1) to standardize the petrographic descriptions used within mineralogy-petrology tasks through use of a set of primary reference books and (2) to assure adequate documentation of petrographic descriptions.

2.0 SCOPE

This procedure may be used for any petrographic descriptions made by standard optical methods (i.e., unaided visual observation, hand lens, binocular microscope, petrographic microscope) for the Environmental Restoration Program.

2.1 Applicability

This procedure is applicable to all researchers working on the Environmental Restoration Program who are responsible for describing rock units occurring within lands covered by the Environmental Restoration Program.

2.2 Training

Completion of at least one college-level course in petrography and a minimum of a BS in Geology or Earth Sciences are required to use this procedure. Researchers using this procedure must also document that they have read and understood this procedure and the six procedures in Section 1.0, General Instructions.

3.0 DEFINITIONS

There are no unique definitions in this procedure.

4.0 BACKGROUND AND/OR CAUTIONS

The principles of petrographic analysis are learned through college-level course work. The standard reference for this procedure is Williams et al. (1954). Mineral identification and description can be augmented by use of other texts such as Wahlstrom (1955) and Tomkeieff (1983).

The only significant source of uncertainty and error in petrographic description is mineral and textual misidentification. Analysts are advised to refrain from making optical mineral identifications where the minerals are too fine-grained for adequate analysis or where the topical properties are ambiguous. Where mineral identifications must be ventured without certain optical identity, the entry should be marked as "possible," "?," or otherwise queried.

Uncertainties and errors in quantitative petrographic analyses are described in the procedure, Determination of Volume Constituents in Thin Sections of Rock, SOP-03.05.

5.0 EQUIPMENT

Petrographic descriptions may be obtained by unaided visual observations, by hand lens, by binocular microscope, or by petrographic microscope. Any brand or model of lens or optical microscope may be used for petrographic analysis.

6.0 PROCEDURE

Petrographic descriptions are either descriptive or quantitative. No two analysts will generate identical descriptions. For such descriptions, the recorded information will be traceable to a specific location in the field or to a specific sample in the laboratory to allow other petrographers to review the description. Photographs and drawings, appropriately keyed to specific field locations or samples, may be used to support petrographic descriptions. Quantitative petrographic analysis includes, but is not limited to, point counting and size measurement. Point counting is described in procedure SOP-03.05. Coarse features may be measured by any standard scale, with metric units preferred; microscopic features may be measured by ocular scale. These scales are used for approximate and relative size classification only; thus calibration of the scales is not required. Examples of petrographic descriptions appropriate to this procedure can be found in the figure captions of Williams et al. (1954). The standard reference for petrographic terms will be Bates and Jackson (1980), Tomkeieff (1983), and Wahlstrom (1955). Many of the terms used for textural features of silicic volcanic rocks are described in Ross and Smith (1961) and Smith (1960).

Petrographic analyses are considered acceptable as descriptive data. Rejections of certain parts of a petrographic analysis may be made by the same analyst or by another analyst based on reanalysis of the same sample; in such a case, the cause for the rejection should be described in the reanalysis and referred back to the original analysis. Because a wide latitude is possible in descriptive parameters, such rejections should be rare. The likeliest cause of a rejection is mineral misidentification based on optical properties; where mineral identity is optically ambiguous and important to the sample description, confirmation of mineral identity should be sought through Operating the Microprobe, SOP-09.02; Operation of Siemans X-Ray Diffractometer, SOP-09.03; or Operation of Scanning Electron Microprobe, SOP-09.07.

Petrographic descriptions are recorded in ink on the attached Petrographic Description Form. Photographs may be attached as part of the description, and sketches may be used. It is advisable to mark or describe the scale of any photograph or sketch.

7.0 REFERENCES

LANL-ER-SOP-Section 1.0, Procedures, General Instructions
LANL-ER-SOP-03.05, Determination of Volume Constituents in Thin Section of Rocks.
LANL-ER-SOP-09.02, Operating the Microprobe.

LANL-ER-SOP-09.03, Operation of Siemens X-Ray Diffractometer.
LANL-ER-SOP-.09.07, Operating Instructions for the International Scientific Instruments Model DS-130 Scanning Electron Microscope and Tracor Northern Series 11 X-ray Analyzer.

Bates, R. L. and J. A. Jackson (editors). 1980. Glossary of Geology. American Geological Institute, Washington, D. C.

Ross, C. S., and R. L. Smith. 1961. Ash-flow tuffs: Their origin, geologic relations and identification. U.S. Geol. Survey Prof.

Smith, R. L. 1960. Zones and zonal variations in welded ash flows. U.S. Geol. Survey Prof. Paper 354-F, p. 149-159.

Tomkeieff, S. I. 1983. Dictionary of Petrology. Wiley, 680p.

Wahlstrom, E. E. 1955. Petrographic Mineralogy. Wiley, 407p.

Williams, H., F. J. Turner, and C. M. Gilbert. 1954. Petrography. W. H. Freeman and Co., San Francisco.

8.0 RECORDS

Petrographic descriptions are recorded on Petrographic Description Form. Maps or photographs should be marked with sample or locality numbers that can be uniquely related to a notebook entry (sample numbering requirements are described in SOP-01.04, Sample Control and Field Documentation).

9.0 ATTACHMENTS

Petrographic Description Form

PETROGRAPHIC DESCRIPTION FORM

LOS ALAMOS NATIONAL LABORATORY
ENVIRONMENTAL RESTORATION
PETROGRAPHIC DESCRIPTION FORM

Date: _____ Sheet _____ of _____

Technical Area _____ Operable Unit _____

Site Work Plan: _____

Signature: _____

AFFIX FIRST SAMPLE STICKER HERE

AFFIX LAST SAMPLE STICKER HERE

1. Hand Sample Description

   1a. Estimated Volume:

   1b. Estimated Size:

2. Microscope Study for Classification

   2a. Primary Features:

   3a. Secondary Features:

   2c. Mineralogy:

   Essential Minerals (Vol. %):

   Accessory Minerals:

   Secondary Alteration:

   2d. Special Features:

3. Stratigraphic Assignment (if known):

4. Rock Classification:

5. Comments (be sure to record Geologic Setting/Occurrence):

☐ CHECK HERE IF CONTINUED ON BACK OF THIS SHEET

ER-SOP-03.04, R0 5/91

EXAMPLE
CONTACT THE PROGRAM OFFICE FOR MASTER FORMS

Los Alamos National Laboratory **Environmental Restoration Program** Standard Operating Procedure	No: LANL-ER-SOP-03.05 Rev: 0

Determination of Volume Constituents In Thin Sections of Rock

	(Print Name)	(Signature)	(Date)
Preparer:	A.W. Laughlin	A.W. Laughlin	8/16/91
Quality Review by:	DAVID BROXTON	David Broxton	8/27/91
Technical Review by:	Bruce Gallaher	Bruce Gallaher	9/12/91
QPPL Approval:	Larry Maassen	Larry Maassen	9/20/91
PM Approval:	Robert W Vocke	Robert W Vocke	9/20/91

Effective Date: 3-16-92

DETERMINATION OF VOLUME CONSTITUENTS IN THIN SECTIONS OF ROCKS

1.0 PURPOSE

This procedure describes a petrographic modal point count method for determining the volume fractions of identifiable constituents in a slide (thin section), using a petrographic microscope.

2.0 SCOPE

2.1 Applicability

This procedure applies to modal point counting of petrographic slides of porphyritic volcanic and volcaniclastic rocks for the Environmental Restoration (ER) program.

2.2 Training

Successful completion of college-level courses in petrography and petrology are required to use this procedure. Field team members must also document that they have read and understand this procedure and the procedures in Section 1.0, General Instructions.

3.0 DEFINITIONS

There are no unique definitions in this procedure

4.0 BACKGROUND AND/OR CAUTIONS

This procedure for ER program rocks is based on principles and methods in standard textbooks on optical mineralogy and petrography (e.g., Williams, Turner, and Gilbert 1954; Hutchison 1974; and Kerr 1977).

The fraction of points within a rectangular grid superimposed on a two-dimensional planar section through a specimen provides an estimate for the volume fraction of an identifiable constituent (Chayes 1949; and Hutchison 1974). This technique assumes that a statistically adequate number of sample points are taken on the plane of section (Weibel 1980; Byers and Moore 1987). Although Chayes' (1949) theory and proof relating point count on a planar section to volume percent of constituents was based on a square grid of points, volume percent of constituents was based on a square grid of points, volume percentages for correlation purposes have been determined from points counted along parallel traverse lines separated as much as 10 times the distance between points along the traverse (Byers et al. 1976; Byers and Warren 1983). In this method, prior to development of point counting, a series of evenly spaced continuous line traverses were made along a rock slab or a thin section and linear intercepts were recorded for each constituent. The total linear intercept distance for each constituent along all the traverse lines was summed by a millimeter scale on a drum translating the stage

for that constituent. An electrically driven adaptation was the Hurlbut stage and console, which summed up the Rosiwal proportional intercepts of each constituent.

The point count method described herein is similar to the Rosiwal system of counting mineral (or other constituent) intercepts, insofar as the number of successive points tallied on a mineral could increase without limit and become infinitesimally close together to form a continuous line or intercept through the mineral. The Rosiwal method is based on the reasonable assumption that the lengths or percentages of the mineral (constituent) intercepts are proportional to its section area, which in turn is proportional to its volume percentage in the rock (see also discussion in Byers and Moore 1987, p. 47). Stoyan (1979) makes similar assumptions based on line segment portions of traverse lines that intersect a given constituent. Inasmuch as the point counts are relatively close together (~1.0 mm), the percentage of the total line segment representing the constituent is approximated.

5.0 EQUIPMENT

Any standard research petrographic microscope with an electrically automated or manual mechanical stage with mm-graduated x-y stage translation controls to move the thin section may be used. The slide is placed in the stage holder parallel to the x translation, which is either (1) electrically power-driven and is connected to a main console that has keys individually assigned to a constituent identifiable in the point count, or (2) traversed manually with intercepts in mm read off the x translation or "clicks" recording translations of ~0.1 to ~0.5 mm, depending on setting (original point counter; Chayes 1949), and the "clicks" are tallied with the other hand on a mechanical counter (e.g. Clay-Adams blood counter). The electrically driven mechanical stage moves ~0.1 to 0.5 mm per count (depending on the setting) and the console sums the points tallied for each constituent and converts to percentages. Precise calibration of the 0.1 to 0.5 translation settings of the mechanical or manual stage is not critical, inasmuch as approximate spacing of translation steps or "clicks" is adequate for calculation of percentages of constituents. The y translation of either automated or manual stage is controlled manually and determines the spacing between traverses, generally 1.0 mm, and need not be calibrated for the simple arithmetic calculation of percentages of constituents.

6.0 PROCEDURE

6.1 Orientation of Plane of Thin Section With Respect to Fabric

In the case of pumice-foliated welded tuff (flattening or foliation nearly perpendicular to gravitational force) or other rock type with horizontal fabric, the thin section should be cut close to vertical with the long dimension running perpendicular to the foliation (Hutchison 1974, p. 47, fig 3.2). This provides the longest traverse lines nearly normal to foliation. Also, in sampling nonfoliated silicic volcanic rocks, especially where the attitude (strike and dip) is unknown, the long dimension of the slide may be cut vertical for consistency. The drill core or surface outcrop should be marked with a down arrow prior to sampling. The thin section preparer should cut the long dimension (30 mm) of the slide parallel to the arrow and show the direction of the arrow on the slide. Exception: In sectioning of a

horizontal cylindrical core plug (e.g., paleomagnetic samples), the thin section is cut perpendicular to the core axis (circular section). Down is marked on the section from the down arrow marked on either end of the core plug by the original sampler.

6.2 Additional Thin Sections From Specimens

Where a sample site is critical, two or three thin sections may be cut from a single specimen of core. The purpose is to provide a larger area to count for better statistics on a critically located sample. The first section should be cut vertical and perpendicular to foliation in accordance with the standard procedure indicated above in 6.1. The second thin section should also be cut vertical and as close to perpendicular as possible to the first section (the second section would not necessarily be perpendicular to the foliation unless it were horizontal), and the third should be at an angle of 45 degrees to the other two and vertical. The third section may, under exceptional circumstances, be cut horizontally perpendicular to the other two but must carefully avoid any large pumice, which might not be representative of the ground mass.

6.3 Data to be recorded

6.3.1 Set-up

The general background for recording thin section data is given in SOP-03.04, Petrography. The procedure described herein results in quantitative petrographic descriptions (Hutchison 1974). No two petrographers will generate identical data but they should be similar (cf. Moore et al. 1989). Definitions of phenocrysts (minerals), textures, and fine grained "groundmass" will depend on the thin section being analyzed. The cut-off size for phenocrysts or microphenocrysts must be judged by the petrographer before the modal analysis is begun. For example, in devitrified rhyolitic tuffs the lower median diameter for microphenocryst (mineral) or fine textural constituent to be recorded is taken at about 0.1 mm; therefore the step-wise movement on traverse lines parallel to the long dimension of the slide (x dimension) is generally selected at ~0.1 mm for phenocryst-poor rocks. This close spacing is selected not only for phenocrysts but also for microscopic textures. Constituents that are smaller than the 0.1 mm cutoff, even though they are recognizable, are included with categories of groundmass. The distance between traverses is generally selected at 1.0 mm, giving about twenty 30-mm traverses per slide. This rectangular grid spacing of 1.0 x ~0.1 mm is generally sufficient to quantify phenocrysts that have abundances of 1% or more.

In volcanic rocks with less than 1% of critical constituents, additional traverses may be required to quantify these constituents. For volcanic rocks with macrophenocrysts and/or coarse textures greater than 0.1 mm that make up more than 1% of the rock, the point spacing along the traverse may be wider than 0.1 mm, depending on size and concentration. Other point-count spacings may be used for other rock types; the spacing should be recorded by the petrographer.

6.3.2 Use of Photographs

For any thin section that may be used for Operating Instructions for ISI Model DS-130 Scanning Electron Microprobe, SOP-09.07, or Operating the Microprobe, SOP-09.02, or may be essential to identify stratigraphic position, an enlarged photo of the entire section may be made before the section is point counted. This photo can then be used to record the location of features of interest, some of which may be phenocrysts for later examination by microprobe and/or SEM. Photographs may also be taken to record fields containing exemplary phenocrysts by 35-mm or Polaroid camera attached to the microscope as standard equipment. These photographs may be numbered and stored as separate records or they may be attached to the Modal Analysis Form (see Attachment A).

6.3.3 Counting

The counting procedure described below is modified to fit ER program rocks from descriptions given in a standard text by Hutchison (p. 44-61). A petrographic microscope with a Swift automated point counter is also shown (Hutchison, Figure 3.6). Magnification selected for point-counting will depend on the grain size of features being analyzed. If features less than 0.1 mm are to be quantitatively determined, then reflected light identification may be preferred (with transmitted light to aid in identification). A constituent beneath the point defined by the intersection of cross hairs within the ocular is tallied by depressing the key corresponding to that constituent on the console or tally recorder, and the stage is simultaneously advanced to the next point. This is repeated until the end of the traverse. If a ~0.1 mm point spacing is used, about 300 points will have been tallied in one traverse on a 30-mm-long slide. As an example, in modal counting of thin sections of devitrified phenocryst-poor tuff, a 10X ocular and a 10X or 20X objective, may be used on the petrographic microscope in transmitted light. The substage converger may be engaged, to enhance the color of groundmass textures. A 40X or higher objective should be available for optical interference figures (conoscopic images) as an aid for positive identification of phenocrysts (Kerr 1977, p. 108-133).

After completion of the first traverse, the stage is moved (usually 1.0 mm) on the y axis and the second traverse is begun, following the above procedure. After about 20 traverses, depending on the width of the slide, the point count is completed. The points in each constituent are read off the manual counter or off the automated console display.

In the rare event that a point should fall on the boundary of two constituents, the constituent with the most area in SE quadrant of the cross hairs will be tallied.

6.3.4 Visual Count of Accessory Minerals

Rare to sparse accessory minerals, mostly of average diameters less than 0.5 mm may be simply enumerated rather than point counted. Accessory minerals in rhyolites include sphene, allanite, zircon, and apatite. The first two are larger, occasionally up to 1.5 mm and may be hit during the point count. The others, however, are generally less than 0.2 mm in long dimension and are rarely hit during a traverse.

6.3.5 Calculation of Percentages

The number of points accumulated for each constituent, C_i, is divided by the total number of points in all constituents, C_T, and is expressed as the volume percent of that constituent, V_i in the thin section:

$$V_i = C_i \times 100/C_T$$

Phenocrysts are expressed as volume percentage ratios, V_p, in which the number of points accumulated for each phenocryst, P_i, is divided by the total number of phenocryst points, P_T, in the thin section.

$$V_p = P_i \times 100/P_T$$

6.3.6 Recording of Data

The following data should be recorded in the appropriate laboratory form:

(a) Total number of points and spacing.
(b) Volume % of each constituent. Individual phenocrysts may also be represented as percent of total phenocrysts.
(c) Specimen location, identification, brief thin section description, and stratigraphic assignment if possible.
(d) Petrographer and date.
(e) The maximum and minimum (cut-off) dimension of each type of phenocryst, if desired.

Any additional information and deviations should be noted on the Daily Activity Log in SOP-01.04.

6.4 Sample/Site Traceability

Sample traceability is described in SOP-01.04, Sample Control and Field Documentation. Site traceability for field petrographic descriptions will be recorded on the Modal Analysis Form; field descriptions will be referenced to appropriate map(s) or photograph(s) as necessary. Copies of maps and photographs will be maintained by the investigator using

them; upon task completion or departure of the investigator from the project, all records will be transferred to the ER Records Processing Facility.

6.5 Acceptance/Rejection Criteria

There are few known potential sources of error in this procedure as far as operation and functioning of equipment. There is, however, a subjective observer element, especially in counting textures where there is a size cutoff; two operators are not likely to get precisely the same results (Moore et al. 1989). If more than one operator is involved, they should check on percent of groundmass textures within 20 percent of error (e.g., 50% ± 10%) within the same thin section; if not, they should discuss differences of observation and repeat the point counts. Phenocryst (including microphenocrysts >0.1 mm) counts in a phenocryst-poor thin section (~1% phenocrysts), should check within 20 percent of error of the total phenocrysts for major constituents, such as feldspars, and within 50 percent on minor constituents, such as biotite, that constitute less than 10 percent of the total phenocrysts (<0.1% of the total rock). Mafic and accessory phenocrysts that occur at less than about 1.0% of the total phenocrysts should be tallied rather than point counted, as the chance occurrence of hitting such very minor constituents in a point count is highly variable. In volcanic rocks with greater percentages of phenocrysts correspondingly greater accuracies should be attainable.

7.0 REFERENCES

LANL-ER-SOPs in Section 1.0, General Instructions.
LANL-ER-SOP-03.04, Petrography.
LANL-ER-SOP-09.02, Operating the Microprobe.
LANL-ER-SOP-09.07, Operating Instructions for ISI Model DS-130 Scanning Electron Microscope and Tracor Northern Series II X-Ray Analyzer.

Byers, F. M., Jr., W. J. Carr, P. P. Orkild, W. D. Quinlivan, and K. A. Sargent. 1976. "Volcanic Suites and Related Cauldrons of Timber Mountain-Oasis Valley Caldera Complex, Southern Nevada." U. S. Geol. Survey Prof. Paper 919.

Byers, F. M., Jr., and R. G. Warren. January 1983. "Revised Volcanic Stratigraphy of Drill Hole J-13, Fortymile Wash, Nevada, Based on Petrographic Modes and Chemistry of Phenocrysts." Los Alamos National Laboratory Report LA-9652-MS.

Byers, F. M., Jr., and L. M. Moore. February 1987. "Petrographic Variation of the Topopah Spring Tuff Matrix Within and Between Cored Drill Holes, Yucca Mountain, Nevada." Los Alamos National Laboratory Report LA-10901-MS.

Chayes, F. 1949. "A Simple Point Counter for Thin Section Analysis." Am. Mineralogist, v. 34, p. 1-11.

Hutchison, C. S. 1974. Laboratory Handbook of Petrographic Techniques. John Wiley & Sons, New York.

Kerr, P. F. 1977. Optical Mineralogy, 4th. Ed., McGraw-Hill Book Co., New York.

Moore, L. M., F. M. Byers, Jr., and D. E. Broxton. June 1989. "Statistical Test of Reproducibility and Operator Variance in Thin-Section Modal Analysis of Textures and Phenocrysts in the Topopah Spring Member, Drill Hole USW VH-2, Crater Flat, Nye County, Nevada." Los Alamos National Laboratory Report, LA-11452-MS.

Stoyan, D. 1979. "On the Accuracy of Lineal Analysis." Biometrical J., V. 21, 439-449.

Weibel, E. R. 1980. Stereological Methods, v. 2: Theoretical Foundations, Academic Press.

Williams, H., Turner, F. J., and Gilbert, C. M. 1954. Petrography. W. H. Freeman & Co. San Francisco.

8.0 RECORDS

A. Completed Modal Analysis Form
B. Completed Daily Activity Log including any additional information and deviations.

9.0 ATTACHMENTS

A. Modal Analysis Form

MODAL ANALYSIS FORM

LOS ALAMOS NATIONAL LABORATORY
ENVIRONMENTAL RESTORATION
MODAL ANALYSIS FORM

Date: _____ Sheet _____ of _____

Technical Area _____ Operable Unit _____

Site Work Plan: _____

Signature: _____

AFFIX FIRST SAMPLE STICKER HERE

AFFIX LAST SAMPLE STICKER HERE

FINAL FIELD VALUES:

Sample Number: _____

Collector: _____

Location: _____

Rock Type: _____

POINT COUNT

Mineral	Points	%	Size Range (mm)
Total			

Comments (Record Other Textural or Alteration Information): _____

EXAMPLE
CONTACT THE PROGRAM OFFICE FOR MASTER FORMS

Los Alamos National Laboratory **Environmental Restoration Program** Standard Operating Procedure	No: LANL-ER-SOP-03.06 Rev: 0

Fracture Characterization

	(Print Name)	(Signature)	(Date)
Preparer:	Kenneth H Wohletz	[signature]	8/26/91
Quality Review by:	DAVID BEOXTON	[signature]	8/27/91
Technical Review by:	H. W. Laughlin	[signature]	8/27/91
Technical Review by:	Bruce Gallaher	[signature]	9/12/91
QPPL Approval:	Larry Maassen	[signature]	9/16/91
PM Approval:	Robert W Vocke	[signature]	9/16/91

Effective Date: 3-16-92

FRACTURE CHARACTERIZATION

1.0 PURPOSE

This procedure details the methodology to be applied for characterization of all natural rock fractures in the Bandelier Tuff. Through application of this standardized approach, field studies of the Bandelier Tuff can give statistically significant measurements of (1) linear density of rock fracture, (2) fracture width, (3) fracture strike and dip, and (4) nature of fracture filling materials.

The fracture characterization plots and data table that result from this study constitute sufficient documentation of rock fracture to locate possible fault zones, tectonic and compaction deformation amounts, density of fractures contributing to fracture permeability, and overall competency of the Bandelier Tuff. The primary intent of this standardized approach is to make fracture characterizations from various field studies compatible such that fault zones from one field area to another can be correlated.

2.0 SCOPE

This procedure is applicable for all fracture characterization studies of the Bandelier Tuff where fractures are consistently exposed, either along road and blade cuts, cliff exposures, mesa tops, or excavation sites.

2.1 Applicability

This procedure is applicable to all researchers working on the Environmental Restoration Program that are responsible for characterizing rock fractures occurring within boundaries covered by the Environmental Restoration Program.

2.2 Training

Completion of a college-level course in field geology and a laboratory/lecture course in structural geology is required to use this procedure. In addition to fulfilling the requirements of this procedure, familiarity with the computer data-base RS/1 or similar system is necessary. Researchers must document that they have read and understood this procedure and the seven procedures in Section 1.0, General Instructions.

3.0 DEFINITIONS

The term "fracture" refers to any natural, linear to curvilinear break in the Bandelier Tuff without regard to the origins of the break. Displacement or opening of the break may exist but is not necessary. Terms having similar connotation for this work are "joint" or "crack." A fracture along which significant displacement has occurred is a "fault." The level of significance required for this designation depends upon locality and geological structure.

4.0 BACKGROUND AND/OR CAUTIONS

Fracture analysis in volcanic tuff follows techniques described in the structural geology text by Dennis (1972). An example document that describes a fracture characterization study on the Bandelier Tuff, using this procedure is by Vaniman and Wohletz (1990).

The main caution that must be taken in this procedure to avoid error is measurement of fractures along traverses where fracture exposure is uniform. The recognition and documentation of a fracture is dependent solely upon the researcher's ability to measure its strike, dip, and opening. In many cases these measurements require projection of the fracture plane by visual alignment. The statistical methods of fracture interpretation are intended to minimize uncertainty in these measurements. Judgement is a critical aspect of field geology and is covered in the text by Compton (1962) and the procedure covering field work SOP-03.09, Geologic Mapping of Bedrock Units.

5.0 EQUIPMENT

Fracture documentation and measurement requires a Polaroid camera to make prints for documenting fracture location, a tape measure, a brunton compass, a geological pick to clear debris from fracture surfaces, a hand lens to identify fracture-filling materials, and a flexible cardboard or plastic sheet that can be inserted into fractures to aid in projecting their strike and dip.

6.0 PROCEDURE

Three phases are required by this methodology: (1) photographic documentation of area or traverse along which fractures will be characterized, with construction of a photomosaic map base; (2) measurement of fractures and their plotting on the previously constructed fracture map; and (3) entering fracture data into a computer data base and their analysis by designated procedures.

6.1 Photo Documentation

Once a traverse or area has been identified for fracture characterization, noting the above caution that fractures should have uniform exposure, a photo mosaic map of the traverse is constructed using a Polaroid camera. In order to maintain a uniform scale and resolution for this photo mosaic base the distance from the camera lens to the exposure should be held within ± 10%. Generally this distance is on the order of 40 to 60 feet such that the edges of the photo will have a lateral scale within ± 10% of that of the photo's center. Successive photos should be overlapped sufficiently to maintain this scale requirement. Also the scale should provide enough visual resolution that major fractures are easily identified on the photo. Typically this scale requirement is that each photo will cover from 10 to 30 horizontal feet of fracture exposure.

After construction of the photomosaic, tracing paper is overlaid to make a map of outcrop features including key topographic points such as cliff tops and bottoms, prominent fractures, and geographic objects such as buildings, trees, and large sign posts. This map should be attached to the base of the photomosaic such that a one-to-one correspondence can be made between mapped and photographed features.

6.2 Fracture Measurement

Using the fracture map constructed from photomosaics, the fracture traverse is measured using a tape measure; a horizontal scale is then placed upon the map that shows the distance between mapped features. This scale will have some horizontal variability because of the map projection method and photographic error. The scale reliability should be ± 10%. Starting from one end of the fracture traverse, each fracture is sketched upon the map and designated by a number. Fracture strike and dip are measured to an accuracy of ± 1 degree with the brunton compass along with a measurement of fracture opening width (measured perpendicular to fracture surfaces). These data are recorded in a field notebook with the fracture number along with a description of any unique features of the fracture, such as nature of fracture filling materials if present, oxidation or mineralization on fracture surfaces, and cross-cutting relationships with other rock features (pumice or lithic clasts, textural features that might be used to estimate movement along the fracture).

6.3 Fracture Data Base and Analysis

The fracture data recorded in the field notebook are entered into a data base, which allows application of several statistical procedures. The RS/1 data base system is suggested for this work but other systems can be adapted. The data base consists of a table with column for each fracture listing the fracture's number designation, its horizontal location shown on the fracture map, its dip and strike, and its width. From these data several other columns are statistically calculated, including: (1) a linear fracture density calculated as a moving average by counting the number of fractures contained in a given distance interval (10 and 100 feet) centered on each fracture; (2) a cumulative fracture width over a specified interval (10 and 100 feet) centered on each fracture; and (3) relative dip of fracture from vertical where negative values indicate southerly inclinations. Because fractures in the Bandelier Tuff are generally part of conjugate sets of northwest and northeast trending systems, additional columns for the table are separately calculated for each of the three above columns for each conjugate set. The RS/1 procedures for the above calculations are archived as source and compiled codes on essxrf VAX under RS/1 directory [wohletz]@ken@ta55. The procedures are: (1) DENS -- calculates linear fracture densities for several different distance intervals; (2) DIP -- transforms dips measurements to degrees from vertical; and (3) WID -- computes cumulative fracture widths for several distance intervals.

Fracture data are then graphed on several different plots. (1) Fracture density (10 and 100 foot intervals) vs horizontal distance along the traverse; (2) Histograms or rose diagram of fracture strike; (3) Fracture strike vs horizontal distance where positive strikes represent

strike in degrees east of north and negative strikes are west of north. These data are smoothed using the RS/1 data smoothing option to show the trend of northeast and northwest fracture sets as well as the overall trend of all fracture strikes; (4) Fracture dips vs horizontal distance where vertical plots at zero, dips toward the northeast or northwest are positive inflections from vertical, and southerly dips are negative inflections from vertical. Again smoothing of data show average trends for fracture sets; (5) Fracture widths vs horizontal distance with smoothed trends for fracture sets; (6) Cumulative fracture widths (per 100 foot interval) vs horizontal distance with smoothed trends for fracture sets; and (7) Fracture widths greater than 10 cm versus horizontal distance.

7.0 REFERENCES

Compton, R.R. (1962) Manual of Field Geology. John Wiley & Sons, New York, 378 pp.

Dennis, J.G. (1972) Structural Geology. The Ronald Press Co., New York, 532 pp.

Vaniman, D. and Wohletz, K. (1990) Results of geological mapping/fracture studies: TA-55 Area. Los Alamos National Laboratory, Seismic Hazards Program Memo, EES1-SH90-17, 48 pp.

LANL-ER-SOPs in Section 1.0, General Instructions
LANL-ER-SOP-03.09, Geologic Mapping of Bedrock Units

8.0 RECORDS

Fracture characterization is recorded on field forms or Daily Activity Logs in SOP-01.04, on a fracture map, and in the RS/1 computer data base. Fracture maps are clearly located by specified topographic points of reference and notes are keyed to numbered fractures on the map as are tabulated fracture data.

9.0 ATTACHMENTS

None.

Los Alamos National Laboratory **Environmental Restoration Program** Standard Operating Procedure	No: LANL-ER-SOP-03.07 Rev: 0

Characterization of Lithologic Variations Within The Rock Outcrops Of A Volcanic Field

	(Print Name)	(Signature)	(Date)
Preparer:	Grant Heiken	Grant Heiken	9-3-91
Quality Review by:	David Broxton	David Broxton	9/5/91
Technical Review by:	A W Laughlin	A W Laughlin	9/5/91
QPPL Approval:	Larry Maassen	Larry Maassen	9/16/91
PM Approval:	Robert W Vocke	Robert W Vocke	9/16/91

Effective Date: 3-16-92

TABLE OF CONTENTS

1.0 PURPOSE 2
2.0 SCOPE 2
2.1 Applicability 2
2.2 Training. 2
3.0 DEFINITIONS 2
4.0 BACKGROUND AND CAUTIONS. 2
5.0 EQUIPMENT 3
6.0 PROCEDURE 3
6.1 Background 3
6.2 Approach. 4
6.3 5
7.0 REFERENCES 10
8.0 RECORDS 11
9.0 ATTACHMENTS 11

CHARACTERIZATION OF LITHOLOGIC VARIATIONS WITHIN THE ROCK OUTCROPS OF A VOLCANIC FIELD

1.0 PURPOSE

This procedure establishes the methodology for characterizing the lithologic variations within rock outcrops of a volcanic field. Field methods used to describe individual outcrops and to establish stratigraphic relationships between outcrops of volcanic rocks are very similar to those used for sedimentary rocks and are described in textbooks on field geology (e.g., Compton, 1962). Careful geological mapping of lithologic units and establishing a stratigraphic framework is a crucial foundation for all other studies within a sequence of volcanic rocks. Without this framework, sample analysis is nothing more than rock collecting. Flexibility in the approach to a comprehensive field study must be allowed in order to determine what observations are appropriate to the rock sequence being studied. For example, the approach to field descriptions and sampling would differ considerably between that used for a large basaltic lava plateau and that used to study a group of small tuff rings.

2.0 SCOPE

2.1 Applicability

This procedure applies to geologists describing outcrops of volcanic rock within and adjacent to the Los Alamos National Laboratory for the purpose of characterizing the geologic setting during the Environmental Restoration program.

2.2 Training

Because of the remarkable complexity of the spectrum of volcanic rocks making up the plateaus occupied by the Laboratory, especially the pyroclastic rocks, descriptions of outcrops require at least an M.A. or M.Sc. in Geology and five years experience with these rock types. Researchers must document that they have read and understood this procedure and the procedures in Section 1.0, General Instructions.

3.0 DEFINITIONS

N/A

4.0 BACKGROUND AND CAUTIONS

When in the field, use common sense when moving from outcrop to outcrop and caution when measuring cliff sections. The best outcrops are always in cliffs, but access can be safely gained along scree slopes, road cuts, and stream bottoms. Follow procedures established in Group EES-1 for field work, which includes the location of your field traverses, time of departure, and estimated time of return. When working on outcrops along a highway, enlist an assistant to watch the traffic.

5.0 EQUIPMENT

The field equipment used by geologists is quite often a matter of personal preference. The basic equipment includes, field notebooks with perforated pages, Daily Activity Logs, ink pens for notes and pencils for sketches, optional camera (Polaroid, 35-mm, large-format, or all of them), rock hammer and chisels, small shovel for unconsolidated samples, sample bags, Geological Society of America rock color chart, Brunton Compass, altimeter, and meter tape (for stratigraphic sections), aluminum or stainless steel markers and nails for marking sample locations, and safety glasses for use during sample collection. Chain-of-Custody/Request for Analysis forms, Sample Collection Logs, Variance Logs, Custody Seals, Unique Sample Stickers, and Sample Labels will also be used. If oriented samples are required, then use of a gas-powered rock drill will be necessary.

6.0 PROCEDURE

6.1 Background

Rock units within volcanic fields show much more lateral and vertical variation than units in most sedimentary basins. They can fill caldera depressions or deep valleys making it possible for younger volcanic rocks to be present at a lower levels than older rocks before any folding or faulting. Pyroclastic rocks are formed quickly, initially with abundant kinetic and thermal energy and can be deposited as ashfalls draping topography, surges that cross topographic highs, pyroclastic flows that follow the valleys, and even wet surges of cohesive ash that defy the laws of original horizontally when plastered onto vertical surfaces.

Facies variations within single depositional units must be considered when mapping volcanic rocks. For example, surges and pyroclastic flows can grade outward into volcanic mudflows because of cooling and condensation of steam within the flow, some distance from the source. Pyroclastic flow units can vary in the degree of welding of pyroclasts, depending upon the unit thickness, with dense rocks near vent or in the center of valley fills. For detailed descriptions of facies variations in volcanic rocks, see Fisher and Schmincke (1984) and Cas and Wright (1987).

TABLE 1. STRATIGRAPHY IN VOLCANIC FIELDS (Adapted from Fisher and Schmincke. 1984).

PURPOSE	FIELD OBSERVATIONS
Correlation of lavas, tuffs, and epiclastic sedimentary rocks; eruption types; unit volumes; locating buried or eroded volcanic vents.	Individual beds; bedding sets in layered sequences; grain size; component analysis of features; fabric.
Paleotopography, and paleogeology; eruption history; depositional history; "basin analysis."	Facies analysis; creating a stratigraphy; descriptions of relations at unconformities;
Magma composition and volcano evolution; tectonic setting and volcanism; regional stratigraphy.	Relations of rock sequences to tectonic framework in time and space; comparison of volcanic fields, centers, and provinces.

6.2 Approach

Establish a working stratigraphy, based upon earlier published work and study of aerial photographs or topographic maps. Published stratigraphic studies supply useful information from nearby areas and may include radiometric dates. Compile all of this information in a notebook and on a map or photo base.

Quickly examine the whole area to locate the best exposures, especially those that show contacts between depositional units. Note these locations on maps and/or photographs and return to them later to measure stratigraphic sections. As stratigraphic data are collected, enter the information on ongoing cross-sections through the volcanic field. During the field season, some of your ideas on the stratigraphy will change and it will be necessary to revisit some outcrops several times to reevaluate your interpretations.

Measure sections at the best exposures, preferably in unfaulted areas. However, this may not always be possible. Begin by standing back and looking at the outcrop from a distance. How many layers or discrete rock units stand out? Mark them on a sketch or Polaroid photograph with their general characteristics, including thickness, texture or structure, and color. This "distance view" may be useful when unraveling variations from one detailed stratigraphic section to another.

When measuring a stratigraphic section, describe the attitude (strike and dip) of the rock units, descriptions of the rock types, and their relation to older rocks, paleosoils and any intrusive rocks. Mark the area traversed while measuring the section on a map or aerial photograph; if neither map or photo exist, prepare a pace-and compass map of the line with distances, slope angles and attitudes (strikes and

dips). Also note elevations, using an altimeter, of the base, top, and important contacts. If you are working with a team, use a tape measure;

If you are by yourself, a Jacob's staff can be used. If the stratigraphic sections are very thick, confirmation of thickness can be made by measuring elevations of contacts on a topographic map.

What will you be measuring and describing? Within the field, rock-stratigraphic units are defined solely on physical differences. Fisher and Schmincke (1984) define a formation as a "mappable bed, bedding set or sequence of beds of any thickness set apart from rock units above and below by distinctive physical criteria such as texture, color, lithologic or mineralogic characteristic, or by weathered zones or erosional unconformities; a member is a convenient subdivision of a formation." They also define the concept of an eruption unit, which is a deposit from a single eruptive pulse, eruptive phase, or an eruption. A sequence of several eruption units can be treated as a mappable unit or formation. Eruption units can refer to pyroclastic fallout deposits, pyroclast flow deposits, volcanic mudflows, lava flows, and any other deposit from a singe eruptive pulse. For detailed information on defining stratigraphic units within volcanic rocks, see Fisher and Schmincke (1984), or Cas and Wright (1987).

6.3 For each layer (pyroclastic, sedimentary, or lava), describe and measure the following characteristics:

Description of Each Rock Unit. Ideally, your descriptions should go onto graph paper taped to a large clip board. This allows you to evaluate relationships at a glance as you are measuring the stratigraphic section. However, because of rain, wind, and carrying around a bulky board, this is not the usual means of recording your observations. You will most likely record your observations and sketches in a notebook, along with thickness and attitudes, to be used later to draw a section in the comfort of your camp or office. Don't worry about using notebook space; it is easier to take copious notes at the time, along with photos and sketches than to wish you had done so later in the office.

A. What is the relation of the unit to underlying rocks? Determine if there is a sharp erosional or depositional contact, a collection of reworked clastic debris, or paleosoil. Do the deposits drape the underlying topography or are they concentrated in channels and valleys. If they are deposited within a valley, measure the size, orientation and slope of the valley floor.

B. What is the color or variation in color? Be consistent and use a color chart (Munsell System rock color charts are available from the Geological Society of America).

C. Within pyroclastic rocks and epiclastic rocks:

1. Grain Size

Field estimates of grain size can be made, using the Fisher (1961) classification, which is parallel with Folk's (1966) classification of clastic sediments. These estimates can be made with a scale and charts for estimating areas. Actual measurements will be made by sample sieving or thin-section studies in the laboratory, but the visual estimates are good enough for measured sections. For coarser materials, including pumice and lithic clasts, they can either be sieved in the field with coarse (>4cm) sieves or measured and described at an outcrop within a designated area outlined on the rock surface (usually around $1m^2$). These observations are especially important for a study of lithic clasts within a pyroclastic unit. Another technique for observing textural variations within an eruption unit is to measure the length of the 5 largest lithic clasts and the 5 largest pumices.

2. Pyroclast Descriptions

Most of this detailed work will be done within the laboratory, but look for pyroclast and lithic clast characteristics that can be used to uniquely identify this formation or member. These can include color, shape, percentage of phenocrysts, phenocryst types, and variety of lithic clasts. Lithic clasts include those of lag breccias, mesobreccias, and megabreccias (the two latter types are related to catatrophic collapse such as avalanches from sector collapse of a volcano and wall collapse within a caldera).

3. Bedding Sets

A sequence of pyroclastic beds can be used to identify a mappable unit in the field, when used along with other observations. For example, a specific member that you are mapping may consist of a fine-grained ash fallout bed overlain by a surge bed, two pyroclastic flow deposits, and a volcanic mudflow breccia. Thicknesses, and the degree of compaction and welding within the pyroclastic flow deposits may change, but the sequence appears to be unique and helps to correlate units.

4. Grading

Is a bed massive, normally-graded, or reversely graded?

5. Oriented Clasts

Within surge deposits and pyroclastic flows, there may be elongate clasts or accidental debris, such as fossil tree trunks, which can be used to determine flow directions. Measure the orientations of the long axes of as many elongate clasts (or debris) as you can find and average them for each field location.

6. Flow Features

Many surge deposits are characterized by dunes and antidunes. Measurement of implied current directions, description of the type of cross-bedding, and the magnitude of the cross-beds are all useful for evaluating eruption types and processes and for locating vent areas.

7. Degree of Induration or Welding

Is the rock welded, partly welded, or nonwelded? Has the rock been indurated or cemented by post-depositional processes, including vapor-phase alteration within pyroclastic flow deposits, weathering, or hydrothermal acidity? Is there evidence for fossil fumaroles, including pipe-like zones cemented with vapor phase minerals or vertical concentrations of small lithic clasts (segregation pipes)?

8. Sampling

For each distinct unit (not necessarily from all measured stratigraphic sections), collect a sample that is representative of that unit. If the tephra are unconsolidated and coarse-grained, use a field sieve, weigh the size fractions, and collect chunks of the pumice in addition to a split of the less-than-1-mm fraction kept for laboratory sieving. If the rock is consolidated (tuff), break off a sample that you feel is representative of the unit. After describing the variety of lithic clasts, collect samples of each lithic type for thin-section study. Collect samples (if appropriate) for radiometric dating and chemical analysis. Coordinate all sampling efforts with the Sample Coordination Facility.

9. Thermal Remanent Magnetization (TRM)

Most welded tuffs have high magnetic stability and have uniform TRM directions. Polarity determinations of welded ignimbrites can be made in the field, using a portable magnetometer (Lipman, 1975).

D. Lava Flows and Domes

1. Texture

Describe the textural variations within flows or domes, including variations in vesicularity (size, shape, and orientation), phenocryst content and size, brecciation, and flow foliation or layering. Map coarsely pumiceous zones, which can rise diapirically and may be broken or folded by flow movement (Fink and Manley, 1987); variations in relief and vesicularity may show up on aerial photographs of silicic lava flows and can be used to map flow structures.

Flow layering in silicic lavas ranges from sub-μm shears, which have annealed to macroscopic bands of dense glass and slightly vesicular glass. Layering attitudes, measured vertically and over the entire lava flow, can provide information on vent location, and physical properties of the flow.

2. Type of Jointing

Most lavas are broken into blocks by thermal stresses during cooling. The open fractures or joints are often columnar, at right angles to the flow surface and base (normal to the isotherms or cooling surfaces). Fracture surfaces are striated, the striae of which is a record of incremental crack advance during stress buildup in the cooling lava (Ryan and Sammis, 1978).

Columnar joints can range in size from a few tens of centimeters to over a meter wide and up to 30 m long (in some thick plateau basalt flows). The columns can have as few as three or as many as seven sides; most appear to have five or six sides (Williams and McBirney, 1979). Mapping column orientations can sometimes help determine lava flows boundaries (especially useful where outcrops are poor); for example, within a valley-filling lava flow, columns in the center of the valley would be vertical but oriented at an angle along the valley walls, and perpendicular to those walls which had acted as heat sinks during cooling of the lava flow. Similar columnar jointing can also be found in dikes, plugs, and lava lakes.

Mapping the size, width, and extent of cooling joints in lava flows exposed at the surface may be of considerable use in estimating their permeability.

3. Petrology

Field identification of lava type. Use whatever petrographic classification with which you are familiar, but be consistent. Remember that the descriptions should be the best possible, but that you will probably change these descriptions once you have thin sections for petrographic analysis and chemical analyses, especially in finely-crystalline rocks.

4. Type of Lava Flow

If possible, describe the type of lava flow. Most basaltic lavas can be described with the terms "pahoehoe", "aa", and "block lava". Include a description of basal breccia and lava tubes or channels if they are visible.

5. Thermal Effects

Thermal metamorphism of rocks underlying the lava flows, which includes the oxidation of soil layers or older rocks, formation of pipe vesicles during heating of water in soil or bogs, or desiccation of clastic sedimentary rocks.

E. Thickness

Measure thickness of all mappable subdivisions (eruption unit, member, or formation) and all of its members or textural subunits. Measure distances from the base of a unit to significant textural features and boundaries.

F. Correlation of Volcanic Rock Units

The means of correctly identifying a particular eruption unit is not difficult if it is small and covers a small area, for example a small-volume rhyolite flow where it is possible to walk from one end to the other. However, even in these cases, describing the lithologic characteristics necessary for correlation may be necessary; for example, if the underlying vent or dike is drilled and a correlation is needed between dike rocks and the flow.

The ability to identify and correlate eruption units becomes much more important if the units are large, extensive, and within a tectonically complex area. If a pyroclastic unit (either fallout deposit or ignimbrite) is to be traced, either for the purpose of determining its volume or its utility as a stratigraphic marker across complex terrain, then correlation criteria must be established. Field work within calderas requires that pyroclastic deposits exposed around the margins be correlated with thick caldera-fill deposits; these tuffs are from the same eruption; but may have drastically different textures.

A whole branch of volcanology, *tephrochronology*, has been developed around the need for correlating volcanic ash deposits (e.g., Wilcox, 1965; Self and Sparks, 1981). Correlation of ash beds requires a unique combination of mineral phases, glass compositions, and particle shapes (e.g. shard types and pumice characteristics) for each deposit. If you are lucky enough to be working with a petrographically unique ash, then it is possible to identify it with a hand lens plus a reference sample of the known deposit. If there are several ash beds of similar composition or appearance, it may be necessary to use chemical analyses of the glass pyroclasts, including trace elements for correlation. Radiometric age dates are useful, but expensive. Bulk chemical analyses are known to be poor for correlation, because gravitational segregation of mineral phases from a glass-shard-laden eruption plume increases with distance from the source. Refractive indices (r.i's) of glass shards, at one time used for correlation, are difficult to utilize because of changes in the r.i.'s with alteration and hydration of the glasses from one depositional environment to another.

Correlation of ignimbrites can be difficult because of facies variations, the degree of welding, post-depositional alteration, and chemical zonation of large-volume eruption units. For example, it is difficult to quickly correlate a nonwelded ignimbrite on the outer slopes of a volcano with densely-welded, hydrothermally-altered ignimbrite from the same eruption within the thick caldera fill. Hildreth and Mahood (1986) have reviewed techniques of correlating ignimbrites and conclude that the following observations are the most reliable:

1. Careful geologic mapping of the whole unit.
2. Indicating stratigraphic position.
3. Noting thermal remnant magnetic directions within welded tuffs and high precision K-Ar ages.
4. Noting a distinctive suite or lithic clasts.
5. Noting petrographic characteristics within pumice clasts, pyroclast shapes, and unusual phenocrysts.

7.0 REFERENCES

LANL-ER-SOPs - Section 1.0, General Instructions.

Cas, R.A.F. and J.V. Wright. 1987. Volcanic Successions: Modern and Ancient. Allen and Unwin. London. 528 pp.

Compton, R.R. 1962. Manual of Field Geology. John Wiley & Sons, Inc. New York. 378 pp.

Fink, J.H. and C.R. Manley. 1987. Origin of Pumiceous and Glassy Textures in Rhyolite Flaws and Domes. Geol. Soc. Amer. Spec. Papers 212: pp 77-88.

Fisher, R.V. 1961. Proposed classification of volcanoclastic sediments and rocks. Geol. Soc. Am Bull., 72. pp: 409-1414.

Fisher, R.V. and H.U. Schmincke. 1984. Pyroclastic Rocks. Springer-Verlag, Berlin. 472 pp.

Folks, R.L. 1966. Petrology of Sedimentary Rocks. Hemphills. Austin. 170 pp.

Hildreth, W. and G.A. Mahood. 1986. Ring-fracture eruption of the Bishop Tuff. Geol. Soc. Amer. Bull., 97. pp 396-403.

Lipman, P.W. 1975. Evolution of the Platoro caldera complex and related volcanic rocks, southeastern San Joan Mountains, Colorado. U.S. Geol. Surv. Prot. Paper 852. 128 pp.

Ryan, M.P. and C.G. Sammis. 1978. Cyclic fracture mechanisms in cooling basalt. Geol. Soc. Amer. Bull. 89. pp 1295-1308.

Self, S. and R.S.J. Sparks. (eds). 1981. Tephra Studies. D. Reidel, Dordrecht. 481 pp.

Wilcox, R.E. 1965. Volcanic-ash chronology. In Quaternary of the United States. Princeton Univ. Press. Princeton. pp. 807-816.

Williams, H. and A.R. McBirney. 1979. Volcanology. Freeman, Cooper and Co. San Francisco. 397 pp.

8.0 RECORDS

Field observations will be kept in the following manner:

(1) Field notebooks.

(2) Where appropriate, large sketches will be made of outcrops with pencil and later inked in the office. This approach is particularly appropriate in most cases where a stratigraphic section is being measured.

(3) On large outcrops or along entire sections of a canyon wall the base for recording these details will be enlargements of photographs taken from the opposite canyon wall with a large-format (8" X 10" negative) camera.

(4) Photographs of field details may be taken with 35 mm or Polaroid camera. The camera should have a built-in date and time that appears on the negative, which will be recorded in the field notebook. Prints prepared for analysis or use in the field (for annotation with ink) will be at the discretion of the investigator. Proof sheets will be filed along with the negatives.

9.0 ATTACHMENTS

N/A

Los Alamos National Laboratory **Environmental Restoration Program** Standard Operating Procedure	No: LANL-ER-SOP-03.08 Rev: 0

Geomorphic Characterization

Prepared by	Steven Reneau (Print Name)	Steven Reneau (Signature)	3/30/93 (Date)
Quality Review by	Larry Maassen (Print Name)	Larry Maassen (Signature)	4/30/93 (Date)
Technical Review by	Jamie Gardner (Print Name)	Jamie R. Gardner (Signature)	1 April 1993 (Date)
PM Approval	Robert Vocke (Print Name)	Robert W Vocke (Signature)	5-7-93 (Date)
QPPL Approval	A. E. Norris (Print Name)	A. E. Norris (Signature)	May 7, 1993 (Date)

Effective Date: May 19, 1993

GEOMORPHIC CHARACTERIZATION

Contents

1.0 PURPOSE 2

2.0 SCOPE 2
- 2.1 Applicability 2
- 2.2 Training 2

3.0 DEFINITIONS 2

4.0 BACKGROUND AND/OR CAUTIONS 2

5.0 EQUIPMENT 2

6.0 PROCEDURE 3
- 6.1 Mapping Surficial Deposits, Landforms, and Drainage Channels 3
- 6.2 Documentation of Surficial Processes 5

7.0 REFERENCES 6

8.0 RECORDS 6

9.0 ATTACHMENTS 7

GEOMORPHIC CHARACTERIZATION

1.0 PURPOSE

The purpose of this procedure is to standardize the geomorphic characterizations of sites investigated in the Environmental Restoration (ER) Program, including (1) preparation of maps of surficial deposits, landforms, and drainage channels, and (2) documentation of surficial processes that pertain to the potential erosion and deposition of contaminated soil and rock material.

2.0 SCOPE

2.1 Applicability

This procedure is applicable to all researchers working on the ER Program who are responsible for characterizing geomorphic features and geomorphic processes associated with site characterization activities.

2.2 Training

To implement this procedure, the user must be a professional geomorphologist, as designated by the ER Program Earth Sciences Team Leader or Geology Principal Investigator, or must be trained by a professional geomorphologist as designated by the Earth Sciences Team Leader or Geology Principal Investigator. Researchers conducting geomorphic characterization activities must also certify that they have read and understood this procedure, as well as the six procedures in Section 1.0, General Instructions.

3.0 DEFINITIONS

There are no unique definitions in this procedure.

4.0 BACKGROUND AND/OR CAUTIONS

The user will follow the general instructions for field personnel as specified in Standard Operating Procedure (SOP) Section 1.0, General Instructions.

5.0 EQUIPMENT

Topographic base map, at a scale appropriate to the task and specified beforehand in consultation with the Project Leader.

Aerial photographs of the site at a scale appropriate to the task. These photographs may include both overlapping vertical photographs that allow stereoscopic examination of the ground surface and oblique photographs that allow improved examination of certain features, such as canyon walls.

6.0 PROCEDURE

The geomorphic characterization activities associated with the ER Program are focused on the identification and description of surficial deposits and landforms that provide evidence for processes that can potentially result in the exposure and/or transport of contaminants. Processes of concern in this task are primarily surficial, specifically mass wasting on canyon walls and erosion associated with surface channels. Also of concern is evidence for lateral emergence of subsurface flow along canyon walls because of its importance in understanding groundwater flow paths and potential transport of contaminants.

Geomorphic characterization involves a thorough examination of the surficial features at sites of concern and in adjacent areas, with the areal extent of study dependent on site characteristics. The areal extent will be determined in consultation with the Project Leader. The size of the area appropriate for examination may vary with the processes under consideration. For example, a search for evidence of emergence of groundwater flow may be important at greater distances from waste sites than the search for evidence for sediment transport and storage on canyon walls. The focus of the geomorphic characterization may also vary dependent on the characteristics of the site. For example, whereas documentation of sites of erosion and deposition associated with drainage channels may be critical at sites where contaminants are or have been exposed at the surface, similar documentation may not be needed at sites where wastes have been deeply buried in rock. Similarly, examination of evidence for past and potential future landsliding on canyon walls may be critical for sites adjacent to the edges of mesas, but may be unnecessary where waste sites are set back a substantial distance from the canyon walls. Decisions concerning the size of the area appropriate for study and the critical processes at a site require professional judgment developed through experience with geomorphic characterization activities.

6.1 Mapping Surficial Deposits, Landforms, and Drainage Channels

Geomorphic features of significance to the investigation are to be located on topographic base maps. For many purposes, adequate location control can be provided by using topographic or man-made features shown on the base map, such as the course of drainage channels. If needed, more precise location control can be provided by using a tape and compass or surveying equipment such as a plane table and alidade, transit, theodolite, or total station.

Preliminary mapping of geomorphic features over a large area is most efficiently done using vertical aerial photographs that provide stereoscopic coverage. This allows rapid examination of the entire area of interest and an initial identification of areas of critical interest that require field checking. The examination of vertical aerial photographs can be supplemented by examination of oblique aerial photos, particularly of canyon walls, that allow improved resolution of detail.

Field checking of the preliminary map is required to confirm the accuracy of interpretations made on the aerial photographs, to locate features not visible on the photographs, and to conduct in depth examination of potentially critical features that provide evidence for processes that may influence the transport and deposition of contaminants. Often, the initial field checking is followed by re-examination of the entire area on the aerial photographs to adjust the preliminary mapping. The above process should be repeated, if necessary, until the geomorphic map adequately records the significant geomorphic features.

Features to be mapped may include:

- cliffs.
- bare bedrock slopes.
- slopes generally covered with a thin soil.
- slopes mantled with colluvial deposits (generally > 1.0 m thick).
- alluvial sediments along channels.
- soil-covered mesa tops.
- artificial fill and disturbed areas.
- drainage channels, distinguishing channels incised into erodible material by a separate symbol from channels not so incised.
- sites of possible or confirmed emergence of lateral groundwater flow, evidenced by observed springs; vegetation indicative of relatively moist conditions; distinct concavities on canyon walls or enlarged amphitheater-shaped drainage heads.
- features indicative of landsliding including: partially-detached blocks on or adjacent to canyon walls; partially-opened fractures near the edges of mesas; pronounced concavities or embayments along the canyon walls that are suggestive of locations of more rapid cliff retreat in the past than adjacent portions of cliffs; deposits of bouldery colluvial debris on canyon slopes or in canyon bottoms that may record large-scale slope failure in the past.

The geomorphic map shall include a legend in which all mapped features are included and described. Mapping units may include small areas with different characteristics, to be mentioned in the legend (for example, "Bare bedrock slopes: includes small, discontinuous areas of thin colluvial deposits").

6.2 Documentation of Surficial Processes

Evidence of the relevant surficial processes active at the sites of investigation is identified during the mapping of surficial deposits, landforms, and drainage channels. Observation sites may be recorded on aerial photographs, the topographic base map, and/or in field notebooks.

Evidence of surficial processes to be recorded may include:

- General variations in soil thickness on mesa tops, if possible, that may reflect long-term variations in the location and intensity of erosion. Relatively thick soils on gentle slopes or towards the center of mesas may reflect low erosion rates or long-term deposition of sediments, and relatively thin soils on steeper slopes and towards the edges of mesas reflect more intense surficial erosion.

- Drainages incised into alluvium or colluvium, specifying width, depth, and length of incision and nature of sediments that the channel is incised into.

- Exposure of roots of trees or shrubs, specifying depth of exposure and age of plant, if possible, as determined from tree rings; surface characteristics should also be recorded, as appropriate, including texture of surficial materials and the gradient of the ground surface.

- Differential erosion of canyon walls that may be related to variations in induration.

- Partially-detached landslide blocks, specifying position in relation to lithologic variations, and the length, width, estimated vertical extent, and apparent amount of previous movement.

- Partially-opened fractures near the edges of mesas, specifying apparent length, depth, orientation, distance from mesa edge, and relation to drainages on mesa.

- Pronounced concavities or embayments along the canyon walls that are suggestive of more rapid cliff retreat in the past than adjacent portions of cliffs or of sapping and erosion at sites of emergence of groundwater flow.

- Distinct deposits of bouldery colluvial debris that may record large-scale slope failure in the past, specifying size and apparent source.

- Springs, both perennial and intermittent, specifying geologic setting of spring, associated landforms such as concavities on canyon walls, and associated vegetation.

- Sites of sediment deposition and storage along streams and on slopes that pertain to transport of contaminants, specifying topographic position, estimated size of storage site, and associated erosional features such as rills or incised channels. Where appropriate, supporting information on the estimated age and history of the deposit should be included, using chronological techniques appropriate to the age range of concern and available datable materials or surfaces.

7.0 REFERENCES

LANL-ER-SOPs in Section 1.0, General Instructions
LANL-ER-AP-02.1, Procedure for Los Alamos National Laboratory ER Records Management

8.0 RECORDS

Documentation that person(s) implementing procedure are trained in geomorphic characterization. This documentation may include summary of education and experience in a curriculum vitae.

Observations and interpretations of geomorphic features and processes made in the field and during examination of aerial photographs will be recorded on maps, in field notebooks, and possibly on photographs. These observations and interpretations will be integrated into a report presenting the results of the geomorphic characterization activities, and this report will serve as the record of these activities. The report may include the following:

- a map or maps showing significant geomorphic features.

- figures illustrating important geomorphic features or relationships, such as: sketches of natural or artificial exposures; geologic cross sections made from field measurements or from topographic maps; cartoons schematically showing important features or interpretations.

- photographs of selected sites.

- tables presenting data from analyzed samples, field measurements, or other pertinent information.

These records shall be transferred to the ER Records Processing Facility in accordance with the Procedure for Los Alamos National Laboratory ER Records Management (LANL-ER-AP-02.1).

9.0 ATTACHMENTS

N/A

Los Alamos National Laboratory **Environmental Restoration Program** Standard Operating Procedure	No: LANL-ER-SOP-03.09 Rev: 0

Geologic Mapping of Bedrock Units

	(Print Name)	(Signature)	(Date)
Preparer:	Fraser Goff	Fraser E. Goff	20 Aug 91
Quality Review by:	DAVID BROXTON	David Broxton	8/27/91
Technical Review by:	A.W. Laughlin	A.W. Laughlin	8/27/91
QPPL Approval:	Larry Maassen	Larry Maassen	8/30/91
PM Approval:	Robert W Vocke	Robert W Vocke	8/30/91

Effective Date: 3-16-92

GEOLOGIC MAPPING OF BEDROCK UNITS

1.0 PURPOSE

This procedure establishes requirements for the collection, plotting, recording, and interpretation of geologic data to produce a geologic map and associated cross-sections of bedrock (non-soil) units. Because many bedrock exposures in the Los Alamos region occur along tall, vertical cliffs, this procedure also establishes requirements for producing geologic maps on photo mosaics of canyon walls and for recording geologic data on measured stratigraphic sections. Finally, this procedure establishes requirements for collection of rock samples.

2.0 SCOPE

2.1 Applicability

Field geology consists of the methods used to examine and interpret structures and materials at the outcrop and field studies are the primary means of obtaining first-hand geologic knowledge. This procedure applies to all Los Alamos National Laboratory personnel and their subcontractors who will perform geologic mapping of bedrock units for regional or site-specific projects of the Environmental Restoration Program (ERP) being conducted on behalf of Los Alamos National Laboratory.

2.2 Training

Successful completion of college-level courses in stratigraphy, structural geology, field techniques, and geologic mapping or demonstrated experience in geologic mapping through publication are required to use this procedure for ERP projects. Researchers or technicians using this procedure must document that they have read and understood it, as well as the procedures in Section 1.0, General Instructions.

3.0 DEFINITIONS

A. Field geology: The investigation of rocks, rock units, and rock structures in their natural environment and in their natural relations to one another.

B. Bedrock: The solid rock that occurs everywhere beneath a mantle of soil.

4.0 BACKGROUND AND/OR CAUTIONS

This procedure is designed for the Environmental Restoration Program but is based on principles and methods of field geology that are discussed in textbooks on the subject (Lahee, 1941; Compton, 1962). This procedure is an adaptation of U.S. Geol. Survey Technical Procedure GP-01, R1 ("Geologic Mapping") dated 11 August 1988. Because most of Los Alamos National Laboratory and waste sites therein are located on the

most of Los Alamos National Laboratory and waste sites therein are located on the Bandelier Tuff, no researcher or technician can perform competent geologic mapping of bedrock units in this area without referring to works on pyroclastic rocks and ash-flow tuffs (ignimbrites) (e.g., Smith, 1960; Ross and Smith, 1961; Smith and Bailey, 1966; Fisher and Schmincke, 1984). Additionally, the geology and stratigraphic nomenclature of the Los Alamos region have been previously defined and usage refined (Griggs, 1964; Bailey et al., 1969; Smith et al., 1970; Gardner, et al., 1986) thus, all geologic mapping projects for the ERP must adhere to accepted terminology, nomenclature, and usage.

The object of geologic mapping includes identification of geologic features (rock units, faults, geomorphology), definition of their distribution, contact relations, and internal variations, and determination of the age and history of the features. This information provides an understanding of the tectonic and geologic processes that could affect sites and investigations of the ERP at Los Alamos National Laboratory. The information is also required to generate models of tectonism, mass wasting, and geohydrology in the Los Alamos region.

5.0 EQUIPMENT

Equipment required to adequately satisfy this procedure may include, but is not necessarily limited to the following:

- Topographic base maps
- Brunton compass (or equivalent)
- Landscape photographs
- Aerial photographs
- Pocket stereoscope
- Rock hammer
- Hand lens
- Field forms, or ER Field Notebooks
- Altimeter
- Binoculars
- Camera
- Sample bags
- Marking pens, pencils, small drafting implements.
- Daily Activity Log
- Chain-of-Custody/Request for Analysis forms
- Sample Collection Logs
- Variance Logs
- Custody Seals
- Unique Sample Stickers
- Sample Labels

6.0 PROCEDURE

6.1 Objective

The object of this procedure is to produce geologic maps, cross sections, and stratigraphic sections of landforms, surficial deposits (excluding soils), and all bedrock features including rocks, faults, fractures, and folds that may occur within any site or regional area of interest or investigation to the ERP. Because of the unique terrain of this region, geologic maps will be constructed on photo mosaics of cliff walls as well as on standard topographic base maps.

6.2 Methods

Geologic maps are to be constructed through annotation of observations and interpretations pertaining to the geology of the area to be mapped (field area) at their appropriate locations on a previously prepared topographic base map or on photo mosaics.

Observations pertain to geologic features or relations that were observed at a specific place within the field area. Both the nature of the observation and the specific place at which the observation was made are to be recorded at the location on the map or photo representing the actual location. For convenience, the details of the observation may be recorded in ER Field Notebooks or Field Activity Daily Log (see SOP-01.04). If so, the specific place, referred to as a field station, shall be numbered, the number recorded at the location on the map or photo representing the actual location, and the same number with the corresponding observation entered on the Daily Log or the ER Field Notebook. Interpretations shall be similarly recorded.

Interpretations are to be distinguished from observations through use of distinctive symbols on the map, and through clear written distinction in the Daily Log or ER Field Notebook.

Observations and interpretations may be made through visitation and examination (field mapping) of the actual geologic feature. Field mapping may be supplemented or aided through examination and interpretation of aerial photographs of the actual geologic features. In field mapping, observations, interpretations, and/or field stations are to be plotted on a version of the base map (field sheet) or photo carried to the field area, and subsequently replotted on a version of the base map or photo retained at the base camp, field office, or home office. If aerial photographs are employed, observations, interpretations, and field stations may be plotted directly on the aerial photographs and subsequently transferred to a field sheet, to a base map, or to a photo mosaic.

The geologic map shall be drawn on a version of the base map and photo mosaic, and provided with an accompanying explanation. The geologic map and

explanation shall present a synthesis of the geologic information contained in the Daily Log or ER Field Notebook notes, field sheets, other base maps, photos, and such auxiliary information from aerial photographs, sample collections, previously published maps, and other relevant sources of data as may be available. In addition, the geologic map shall present an interpretation of the likely distribution, character and age relationships of the particular geologic features of interest (e.g., rock stratigraphic units, geologic structures, surficial deposits, geomorphic features) consistent with available observational data. Finally, the geologic map, explanation, and supporting documentation and illustrative material (e.g., text and cross-sections), if used, shall distinguish through appropriate symbols or other means that which was observed from that which was interpreted.

6.2.1 Map Scale

This procedure is applicable to geologic mapping of bedrock features at all scales. Specific scales of base maps and photo mosaics are chosen at the discretion of the Principal Investigator (PI) of each site or regional investigation.

6.2.2 Base Maps

Base maps include those prepared by FIMAD or the engineering groups of Los Alamos National Laboratory (a variety of scales <1:24,000) or advance and edition copies of U.S. Geological Survey topographic quadrangle maps at 1:24,000 to 1:100,000 scales. Base maps may be made of paper or transparent plastic such as mylar. Base maps may be cut into pieces or folded for convenient transportability. Plastic overlays may be used to record field station numbers or other data. Photos used for photo mosaics of cliff walls may be of any convenient scale to adequately portray necessary geologic features. Two versions of base maps and photos used for mosaics may be employed. These are field copies for actual field work and compilation copies used in the office for integration of all field data.

6.2.3 Rock Samples of Stratigraphic Units

Hand samples should be collected from the outcrop or from artificial exposures (man-made cuts and pits) and retained in sufficient number to represent the dominant lithologies and significant variants of all mapped rock stratigraphic units. Samples of rock stratigraphic units should normally be obtained by breaking the prospective sample from the outcrop, using a hammer or hammer and chisel. If the sample is taken from material previously separated from the outcrop (e.g., float or talus) that fact should be recorded in the Daily Log or ER Field Notebooks. Samples may be bagged in plastic, cloth, or paper bags if necessary to prevent loss, damage or contamination of the sample during handling, transit, and storage.

Samples of friable materials (soils, uncemented aggregates) should be collected directly from the bed, stratum, or deposit they are to represent, using implements appropriate to the purpose (e.g., shovels, trowels), taking care to prevent contamination of the sample through accidental inclusion of foreign material, and bagged in plastic, cloth, or paper bags.

Processing of these samples is limited to preparation of thin-sections, polished sections, grain mounts, and measurement of physical properties (e.g., specific gravity) or other nondestructive procedures. However, portions of a sample may be removed for destructive tests (e.g., chemical analysis) provided sufficient material remains, in the judgement of the PI, to fulfill the primary purpose of the sample, as described above.
Specialized sampling for other purposes (e.g., dating), which may be necessary or desirable, is outside the scope of this procedure.

6.2.4 Photographs

Aerial photographs (vertical or oblique, color or black and white) may be used as described above to observe, interpret, and plot geologic features and field stations. If annotated, the photographs become part of the formal data base. If not annotated, the photographs are regarded as part of the informal data base, requiring no special documentation or custodial care.

Photographs of specific geologic features may be taken using hand-held cameras as part of field data collection. The field location, frame number, azimuth (approximate), and object of the photograph are to be recorded in the Daily Log or ER Field Notebooks. As soon as practicable thereafter, a print or duplicate transparency of the photograph should be correlated with the information in the Daily Log or ER Field Notebooks, the print or transparency labeled in such a way that this information can be recovered, and filed as part of the formal data base. Other prints, positives, and negatives of the same photograph may be retained by the PI as part of an informal data base, to be used for other purposes, and requiring no special documentation or custodial care.

6.2.5 Attitude of Planar and Linear Features

The attitude of planar and linear features may be measured using hand-held devices (e.g., Brunton compasses) at the discretion of the PI. The measurement may be entered directly on field sheets, aerial photographs, or on Daily Logs or ER Field Notebooks. Magnetic declination will be compensated for by adjustment of the compass to the local declination, or through adjustment of the measurement.

6.2.6 Field Notebooks

Field notebooks may be used if preferred over Daily Log Sheets. The ER Field Notebooks will have perforated sheets that may be removed and attached to field forms, photographs, or other pertinent record information in a record package. The sheets in the ER Field Notebooks must have printed sequential numbers, and the header information on each set of sheets must be complete. In addition the notebooks sheets must contain, as appropriate:

- Title of mapping activity;
- Description of the objective of the mapping activity;
- Identification and scale of field sheets and base map(s) used in the mapping; and
- Equipment used.

Other information may be included, such as, weather and field conditions, sample information, data collected, or diviations, if this information is not included elsewhere.

At the conclusion of the mapping, the final results and a summary of the outcome of the mapping shall be provided. This summary shall include a discussion of whether the mapping objectives, as outlined in the initial entries, were achieved. The summary shall also include a reference to a completed and published report or map; or the summary will be provided in the field notebook. The field notes shall be reviewed and signed by a Technical reviewer.

6.3 Assumptions Affecting the Procedure

A basic assumption is that the individuals applying this procedure are competent, well-trained geologic mappers.

6.4 Data Information

Data collected using this procedure is presented as a geologic map, with accompanying explanation and optional cross-sections, and character of rock- and/or soil-stratigraphic units, geomorphic features, faults, folds, and fractures, their age relationships, and their geologic history.

6.4.1 Quantitative/Qualitative Criteria

An acceptable general purpose geologic map should meet the following criteria:

1. The map should be on a base that meets National Map Accuracy Standards. A topographic base is essential except on small scale maps or in areas of such low relief that the absence of contours does not hinder geologic interpretation. Bedrock geology portrayed on photo mosaics of cliff faces should show obvious reference features or structures.

2. The completed map should be clearly readable and usable at publication scale. All symbols on the map should be fully explained in the marginal material, if not in common usage. The sources of geologic data should be indicated for all parts of the map. Contacts inferred from geophysical, photogeologic, or remote sensing data should be identified and explained.

3. All geologically significant units mappable at the scale selected should be shown, and geologic features should be depicted uniformly throughout the area of the map.

4. Mines, prospects, quarries, wells, trenches, test pits, and drill holes should be shown to the extent possible at the map scale.

5. Geologic interpretations should be internally consistent and plausible. Relations of normal contacts of geologic units to topography should be consistent with rock attitudes, stratigraphy, and structure shown on the map and in cross sections.

6. Structure should be adequately portrayed. Attitudes of significant structural features should be indicated wherever practical. Structure sections should be included if needed for clarity, and these should be consistent with relations depicted on the map.

7. Surficial units should be distinguished and, where possible, subdivided on the basis of age, origin, morphology and/or lithology. If the map meets all criteria but this, it should be termed as bedrock geologic map. If it meets this criterion, but does not portray the bedrock units, it should be termed a surficial geologic map. In some cases several maps may be required to provide adequate general purpose coverage of an area.

8. Faults that display mappable offset of stratigraphic or lithologic units or which display evidence of recent movement, or are of some other special significance, should be mapped and classified as to type (normal, reverse, thrust, strike-slip, etc.); and dip and direction of relative movement should be shown wherever possible.

9. The explanation should be concise and reasonably definitive, and should express the distinctive characteristics and principal variations in the map units. Map units (including surficial units) should be described in terms of lithologic character, physical properties, thickness (where possible), economic significance, geologic and/or absolute age and contact relations. Definition of map units and stratigraphic nomenclature should be consistent with current USGS standards.

6.5 Calibration Requirements

Calibration is not required as a part of this technical procedure.

6.6 Sample Identification

As part of the data records and documentation, all samples will be identified as follows: All samples will be labeled with a unique identifier, using indelible ink whenever possible. Samples with surfaces too rough to mark, or too porous to mark, will be placed in bags and the bags will be marked with the unique sample identifier. Sample identifiers will be recorded on field sheets, base maps, or photos as deemed appropriate by the PI. PIs shall assure that the original sample identifier is traceable to all documentation associated with the samples, and is maintained when the samples are handled by different organizations. All sampling efforts must be coordinated with the Sample Coordination Facility.

6.7 Control and Storage

Samples collected during this work shall be identified and controlled in accordance with the procedure for Sample Control and Field Documentation. (LANL-ER-SOP-01.04).

6.8 Special Treatment

Samples shall be prepared for examination or analyses according to the purpose for which they were collected. Samples are to be routinely prepared for petrographic or geochemical analyses.

7.0 REFERENCES

Lahee, F. H. 1941. Field Geology: McGraw-Hill, New York.

Compton, R. R. 1962. Manual of Field Geology: Wiley & Sons, New York.

Fisher, R. V. and H. U. Schmincke. 1984. Pyroclastic Rocks: Springer-Verlag, New York.

Ross, C. S. and R. L. Smith. 1961. Ash-flow Tuffs: Their Origin, Geologic Relations, and Identification: U.S. Geol. Survey, Prof. Paper 366, 81 p.

Smith, R. L. 1960. Zones and Zonal Variations in Welded Ash Flows: U.S. Geol. Survey, Prof. Paper 354-F, p. 149-159.

Smith, R. L. and R. A. Bailey. 1966. The Bandelier Tuff: A Study of Ash-flow Eruption Cycles from Zoned Magma Chambers: Bul. Volcano. v. 29, p. 83-104.

Griggs, R. L. 1964. Geology and Groundwater Resources of the Los Alamos Area, New Mexico: U. S. Geol. Survey, Water Supply Paper 1753.

Bailey, R. A., R. L. Smith, and C. S. Ross. 1969. Stratigraphic Nomenclature of Volcanic Rocks in the Jemez Mountains, New Mexico: U. S. Geol. Survey, Bull. 1274-P.

Smith, R. L., R. A. Bailey, and C. S. Ross. 1970. Geologic Map of the Jemez Mountains, New Mexico: U.S. Geol. Survey, Miscell. Geol. Invest. Map I-57.

Gardner, J. N., F. Goff, S. Garcia, and R. C. Hagan. 1986. Stratigraphic Relations and Lithologic Variations in the Jemez Volcanic Field, New Mexico: Jour. Geophys. Res., v. 91, p. 1763-1778.

LANL-ER-SOP-Section 1.0, General Instructions.

8.0 RECORDS

All information collected and recorded under this procedure and that is to be used in support of the Los Alamos ERP must become a part of the official record. Information needed to process each item as a record includes: title or description, subject, originator, date of the document, and whether it is an original, a revision or an addendum.

Specific items from this procedure that will constitute a record are ER Field Notebooks, in their entirely or sheets thereof, field sheets, base maps, annotated aerial photographs, samples, photographs of specific features using hand-held cameras, and logbooks.

8.1 Field

All organized documentation will be prepared as appropriate by the PI or a contributing investigator to record data from this procedure and shall include any information considered pertinent. Each page of documentation will be numbered consecutively and chronologically. Information superseded as a result of any revisions will be lined out, initialed, and dated. All documents will be signed or initialed and dated by the investigator on a daily basis when entries are made.

8.2 Review

All data collected and the applicability of methods used in this procedure will be reviewed and cosigned by a peer or supervisor of the investigator who is knowledgeable in the objectives of this procedure. This indicates that the data are acknowledged by both the investigator and the reviewer to be acceptable and meaningful data that meet appropriate quantitative and qualitative acceptance criteria. Unacceptable data shall be identified in a manner appropriate to the form of the data.

9.0 ATTACHMENTS

N/A

Los Alamos National Laboratory **Environmental Restoration Program** Standard Operating Procedure	No: LANL-ER-SOP-03.10 Rev: 0

Trenching and Logging

Prepared by	Steven Reneau (Print Name)	Steven Reneau (Signature)	3/30/93 (Date)
Quality Review by	Larry Maassen (Print Name)	Larry Maassen (Signature)	4/30/93 (Date)
Technical Review by	Jamie Gardner (Print Name)	Jamie L. Gardner (Signature)	1 April 1993 (Date)
PM Approval	Robert Vocke (Print Name)	Robert W. Vocke (Signature)	5-6-93 (Date)
QPPL Approval	A. E. Norris (Print Name)	A. E. Norris (Signature)	May 6, 1993 (Date)

Effective Date: May 19, 1993

Trenching and Logging

Table of Contents

1.0 PURPOSE 2

2.0 SCOPE 2
- 2.1 Applicability 2
- 2.2 Training 2

3.0 DEFINITIONS 2

4.0 BACKGROUND AND/OR CAUTIONS 2

5.0 EQUIPMENT 2

6.0 PROCEDURE 3
- 6.1 Trench Locations 3
- 6.2 Trench Dimensions 3
- 6.3 Trench Wall Preparation 3
- 6.4 Logging Scale 3
- 6.5 Logging Procedures 4
- 6.6 Stratigraphic and Lithologic Variations 4
- 6.7 Photography 4
- 6.8 Other Notations 4

7.0 REFERENCES 4

8.0 RECORDS 4

9.0 ATTACHMENTS 5

Trenching and Logging

1.0 PURPOSE

This procedure describes general methods for trenching and logging of trenches for characterization of geologic units or geologic structure.

2.0 SCOPE

2.1 Applicability

This procedure is applicable to all personnel conducting trench excavation and trench logging for the Environmental Restoration (ER) Program for the purposes of geologic characterization.

2.2 Training

The investigation team should be composed of technical specialists with backgrounds in the field of geology. In addition, all personnel using this procedure for the ER Program must certify that they have read and understand this procedure.

3.0 DEFINITIONS

There are no unique definitions in this procedure.

4.0 BACKGROUND AND/OR CAUTIONS

Trenches are open excavations with generally vertical sides, and precautions are required to ensure the safety of workers. Shoring is required for trenches deeper than 5 feet when the trench is excavated in material susceptible to collapse, and ladders are required to provide exits for site workers. A minimum of two people must be present at the site before entry, and all personnel entering trenches must be equipped with hard hats and steel-toed safety shoes. OSHA Publication 2226, Excavation and Trenching Operations, should be reviewed prior to start-up.

5.0 EQUIPMENT

Equipment to be used in trench activities include standard geologic and surveying tools, such as the following:

- Geologic hammer
- Pick
- Knife
- Brunton compass
- Hand lens

- Notebook
- Total station, theodolite, or transit
- Stadia rod or surveying prism

6.0 PROCEDURE

Trenching may be used to document the presence or absence of faults or other geologic structures, and to help evaluate the potential for surface rupture and the frequency and amount of such displacement. Trenches may also be used to evaluate other geologic features such as soils or stratigraphy.

Geologic features such as stratigraphy, faults, fractures, and related structures will be logged in detail. This will allow the geologic relationships and sample locations to be permanently recorded and to be available for later analysis

6.1 Trench Locations

Trench locations shall be determined on the basis of field mapping and analysis of aerial photographs. Sites will be selected based on the requirements of the project, such as the potential for providing data on fault location and fault history, stratigraphic units, or soils.

Location control at trenches shall be done using either a digital total station or hand-surveying methods. The locations will be tied to topographic maps and/or aerial photographs.

6.2 Trench Dimensions

The minimum trench dimensions sufficient to expose significant geologic materials and relationships on the trench wall are generally 5 to 12 feet deep by 3 feet wide. The actual dimensions may vary depending on site and geologic conditions and available equipment. Trenching will also vary considerably depending on topography, ease of excavation, and available equipment.

6.3 Trench Wall Preparation

The sides of the trench shall be cleaned by chipping or scraping continuously so as to expose a clean face of rock, sediment, or soil.

6.4 Logging Scale

The choice of scale will be at the discretion of the project geologist and will depend on the complexity of geologic structures revealed in the trench. The normal scale for detailed logging is 1 inch equals 1 to 2 feet. Justification for scales other than these shall be documented.

6.5 Logging Procedures

Logging procedures shall consist of making a vertical profile parallel to one trench wall using a natural scale, with no vertical exaggeration. Contacts between geologic units shall be drawn on the profile and units identified and described as considered appropriate by the project geologist. Characteristics and types of contacts shall be noted.

6.6 Stratigraphic and Lithologic Variations

Variations within the geologic units will be described and indicated on the trench log whenever the variation occurs.

6.7 Photography

After the trench is logged, the shoring, if used, will be removed and the trench may be photographed at the discretion of the project geologist.

6.8 Other Notations

Sample locations shall be shown in the trench log and their locations written on a sample tag showing the trench station. All sample locations should be referenced to trench stationing.

7.0 REFERENCES

OSHA Publication 2226, Excavation and Trenching Operations, U.S. Department of Labor

LANL-ER-AP-02.1, Procedure for LANL ER Records Management

8.0 RECORDS

The results of the trenching activities shall be presented in a report, and this report will serve as a record of these activities. The report will include the following:

- a map or maps showing trench locations,
- detailed trench logs,
- descriptions of geologic units and structures exposed in the trenches, and
- interpretation of the trench logs with respect to the project goals

Records will be transferred to the ER Records Processing Facility in accordance with the Procedure for LANL ER Records Management (LANL-ER-AP-02.1).

9.0 ATTACHMENTS

N/A

Los Alamos National Laboratory **Environmental Restoration Program** Standard Operating Procedure	No: LANL-ER-SOP-03.12 Rev: 0

FIELD AND LABORATORY NOTEBOOK DOCUMENTATION FOR ENVIRONMENTAL RESTORATION EARTH SCIENCE STUDIES

Prepared by	Gabriela M. Gainer (Print Name)	Gabriela M. Gainer (Signature)	9/13/93 (Date)
Quality Review by	David E. Broxton (Print Name)	David Broxton (Signature)	9/13/93 (Date)
Technical Review by	Steven L. Reneau (Print Name)	Steven Reneau (Signature)	9/13/93 (Date)
PM Approval	Robert Vocke (Print Name)	Robert W Vocke (Signature)	11/3/93 (Date)
QPPL Approval	Larry Souza (Print Name)	L. A. Souza (Signature)	11/3/93 (Date)

Effective Date: 11/17/93

FIELD AND LABORATORY NOTEBOOK DOCUMENTATION FOR ER EARTH SCIENCE STUDIES

Contents

1.0 PURPOSE 1

2.0 SCOPE 1
- 2.1 Applicability 1
- 2.2 Training 1

3.0 DEFINITIONS 1
- 3.1 Investigator 1
- 3.2 Environmental Sample 1
- 3.3 Earth Science Sample 2
- 3.4 Notebook 2

4.0 BACKGROUND AND/OR CAUTIONS 2

5.0 EQUIPMENT 2

6.0 PROCEDURE 2
- 6.1 Type of Notebooks 2
  - 6.1.1 Bound Notebooks 3
  - 6.1.2 Electronic Notebooks 3
  - 6.1.3 Loose-Leaf Notebooks 3
- 6.2 General Notebook Requirements 3
  - 6.2.1 Starting a Notebook 3
  - 6.2.2 Requirements for Notebook Entries 4
  - 6.2.3 Attachments to Notebooks 4
- 6.3 Content of Notebook Entries 5
  - 6.3.1 Entries that Document Field or Laboratory Activities 5
  - 6.3.2 Entries that Document Tabulated Data and Sample Tracking 6
  - 6.3.3 Entries that Document Activities Prescribed by Los Alamos ER Procedures 7
- 6.4 Review of Notebooks 7

7.0 REFERENCES 9

8.0 RECORDS 9

9.0 ATTACHMENTS 9

FIELD AND LABORATORY NOTEBOOK DOCUMENTATION FOR ENVIRONMENTAL RESTORATION EARTH SCIENCE STUDIES

1.0 PURPOSE

This procedure establishes the methods used to document earth science field or laboratory investigations and the methods to track the origin, history, and disposition of earth science samples used for the Los Alamos National Laboratory (Laboratory) Environmental Restoration (ER) Program.

2.0 SCOPE

2.1 Applicability

This procedure applies to the documentation of field and laboratory activities conducted for earth science studies and for site-specific geologic and geohydrologic studies. This procedure covers the documentation of the collection, description, processing, and analysis of earth science samples and information in the field. This procedure applies to personnel conducting ER investigations for which the principal method of activity documentation is through notebook entries. Investigators who document their field or laboratory studies in notebooks are responsible for the proper implementation of this procedure.

The documentation for the collection of environmental samples, which are used primarily for laboratory analysis to determine contaminant nature, concentration, and/or extent, is not applicable to this procedure.

2.2 Training

Notebook authors and reviewers who conduct the actions described in Section 6.0 are required to be trained to this procedure. Training is accomplished by reading this procedure and documenting the training on the Environmental Restoration Standard Operating Procedure (SOP) Training Documentation Check List form.

3.0 DEFINITIONS

3.1 Investigator

For the purpose of this procedure an investigator is the user (author) of the notebook.

3.2 Environmental Sample

An environmental sample is one whose properties are studied to gain information about contaminant nature, concentration, and/or extent. Examples

of environmental samples include cores, cuttings, hand samples, soils, and fluid. These samples are submitted to the laboratory for contaminant analysis and are used to determine the course of action for a Potential Release Site (PRS). These samples require documentation per LANL-ER-SOP-01.04, Sample Control and Field Documentation.

3.3 Earth Science Sample

An earth science sample is one whose properties are studied to gain information about the geology, hydrology, geochemistry, geophysics, and/or physical characteristics of a site. Examples of earth science samples may include cores, cuttings, hand samples, mined muck, soils, soil-affecting plants, and fluid.

3.4 Notebook

Notebooks are used to document investigations. A notebook may be used for a single purpose [e.g., to document work done for an operable unit (OU) or task] or by a single investigator involved in a series of related tasks. There are three types of notebooks: bound, loose-leaf, and electronic. Bound and electronic notebooks are generally used to provide a detailed, chronological description of the various activities performed during investigations or to document miscellaneous activities (e.g., ideas, observations, and field trips). Loose-leaf notebooks are generally used to record activities prescribed by Los Alamos ER field or laboratory procedures (SOPs) or to record tabulated data (e.g., sample tracking [sample tracking log], numerical data, photographs, and other technical data).

4.0 BACKGROUND AND/OR CAUTIONS

This procedure *cannot* be used to document activities related to the collection of environmental samples, which will be used to determine the course of action for a PRS. Those samples require documentation per LANL-ER-SOP-01.04, Sample Control and Field Documentation.

5.0 EQUIPMENT

N/A

6.0 PROCEDURE

6.1 Type of Notebooks

Bound, electronic, and/or loose-leaf notebooks can be used to document investigations or geologic sample gathering information.

6.1.1 Bound Notebooks

Bound books with blank, numbered pages are generally used for documenting field investigations, mapping, or laboratory work. They are used to record a detailed, chronological description of the various activities performed during investigations or to document miscellaneous information or activities (e.g., ideas, observations, and field trips).

6.1.2 Electronic Notebooks

Electronic media may be used as a tool to document field or laboratory activities or to enter tabulated data; however, the electronic copy of the file is not the record. A hard copy of the notebook entries becomes the record and is maintained in a binder or folder. Entries are printed out each day (if there is an entry). Each page must contain a page number, file name, date, and signature of the investigator who made the entries. The print-out pages are treated as a loose-leaf notebook, and the requirements for this type of notebook must be followed.

6.1.3 Loose-Leaf Notebooks

Loose-leaf notebooks may be used for documenting field investigations, laboratory work, collecting attachments, or as the means for maintaining hard copies from electronic media entries. If loose-leaf notebooks are to be used, the pages are consecutively numbered and kept in an appropriate binder or folder. Each page is signed and dated by the investigator. Loose-leaf pages may also be numbered consecutively in a subdivided section, providing a logical system is used (e.g., pages A1, A2, & A3 in Section A). A table of contents is included at the beginning of the notebook, and provides the current page count for the notebook or for each section (as applicable). This table of contents should be updated weekly (if entries were made).

6.2 General Notebook Requirements

The following requirements apply to all notebooks. Additional requirements for specific types of entries are detailed in Section 6.3.

6.2.1 Starting a Notebook

Enter on the first page of the notebook the following items:

- investigator's name;
- title of activity;
- OU for which work is being done, if appropriate; and
- name of Principal Investigator (PI) or Project Leader (PL) responsible for the activity, if appropriate.

Investigators may create a table of contents or index for listing the major sections within the notebook.

6.2.2 Requirements for Notebook Entries

All entries in notebooks must meet the following requirements:

6.2.2.1 Make text and data entries in ink (not pencil), or use electronic media to record entries. Field sketches may be made in pencil and then inked over.

6.2.2.2 Enter the date at the beginning of the entry.

6.2.2.3 Record entries in sufficient detail so that another similarly qualified individual could repeat the work described and achieve comparable results without recourse to the original investigator.

6.2.2.4 When recording entries by hand, in a bound notebook, sign the entry after completing a task or workday (whichever is shortest). Two or more individuals may record entries in the same notebook, providing they each sign their own entry. When using electronic media, print out a copy of the entry when the task or workday is finished (whichever is shortest) and date and sign each page of the hard copy. When using loose-leaf notebooks, sign and date each page.

6.2.2.5 Fill out each page of the notebook completely, unless you need to reserve space for future entries (for example when entering tabulated information). Clearly label spaces for future entries and record these entries before you complete the notebook. After completing all entries, void all blank spaces with a diagonal line.

6.2.2.6 Correct entries by crossing the incorrect entry with a line so that the original entry is readable and by entering the correct information. If the correction is done at a later date, initial and date the correction.

6.2.3 Attachments to Notebooks

All attachments (e.g., maps, charts, graphs, and computer printouts) are referenced in the applicable notebook, or they can be included within the loose-leaf notebook or binder that corresponds to the work for that attachment. Loose-leaf attachments for bound notebooks are maintained in a uniquely identified binder or folder and the pages are consecutively numbered.

6.3 Content of Notebook Entries

The content of notebook entries is divided into three categories: (1) entries that document field and/or laboratory activities such as field observations, mapping, sample collection, petrographic descriptions, data reduction, and data analysis, (2) entries that document tabulated data and sample tracking such as laboratory data collection, and (3) entries that document activities prescribed by Los Alamos ER procedures.

6.3.1 Entries that Document Field or Laboratory Activities

Notebooks are used to provide a continuous record of an investigation, such as geologic mapping, geomorphic characterization, or fracture characterization. The notebook provides traceability from field activities to laboratory activities where photographs, samples, and maps are used to support a result: a measurement, a map, or a report. The notebook will provide traceability for the results or conclusions, such that other similarly qualified individuals could arrive at the same conclusions without recourse to the investigator.

6.3.1.1 For field and/or laboratory activities, document the items listed below for each site or task. If one of the items listed below does not apply during any part of the work, mark "NA" beside that item. If an item becomes applicable during the process of the work, document that item when it becomes applicable.

- Date.
- Description of the work to be done (description may include reference to other notebooks, procedures, manuals, texts, etc.).
- Description of the location, reference to a map or photograph that shows the site (if appropriate).
- Methods and objectives (state the methods to be employed, and objectives of the work, reference a SOP or other information if appropriate).
- Equipment (list any major equipment or special materials; common field equipment does not need to be identified)
- Software (if doing data reduction or data analysis).
- Samples collected or utilized (by identification number).

- Data or observations.
- Weather conditions (when appropriate).
- Conclusion (when appropriate).

6.3.1.2 In subsequent entries (follow-up in a site or task), provide detailed daily entries of the work performed and results obtained, addressing the items listed in Section 6.3.1.1 as appropriate. Daily entries are not required for days in which work was not performed.

6.3.1.3 Describe any changes made to the original method(s) stated in 6.3.1.1, as appropriate.

6.3.2 Entries that Document Tabulated Data and Sample Tracking

These types of entries provide a continuous record of geologic sample traceability, e.g., an inventory of samples that have a unique number identifier that allows tracking a geologic sample from the time it is collected in the field until its disposition. This traceability must be maintained until the sample is consumed or the activity concludes. Sample history must be able to be reconstructed from the combined use of sample tracking logs and/or notebooks in which sample studies are documented. Site traceability for geologic samples is maintained by using field notebooks, maps, and/or photographs. Tabulated data can be a result of analysis (e.g., microprobe), measurements (e.g., point counts, fracture lengths), in which information that must be captured is that information that will allow other individuals to reproduce the results obtained by the original investigator.

6.3.2.1 For tabulated data and sample tracking, document the items listed below. If one of the items listed below does not apply during any part of the work, mark "NA" beside that item. If an item becomes applicable during the process of the work, document that item when it becomes applicable.

- Description of the work to be done (description may include reference to other notebooks, procedures, manuals, texts, etc.).
- Headings for the table columns that are clear, or an entry with an explanation for the headings.
- Sample identification number.

- Date of laboratory work (when appropriate).
- Brief description of sample or description of the process that the sample is being put through.
- Disposition of a sample (when appropriate).

6.3.3 Entries that Document Activities Prescribed by Los Alamos ER Procedures

When documenting work that is performed following an ER procedure, the following requirements must be followed:

6.3.3.1 Record the identification number (including the revision number) of the applicable Los Alamos ER procedure. The identification number of the procedure does not need to be recorded every time if the same procedures are being used for the activities documented in the notebook. The procedure identification number can be noted in the beginning of the notebook with a note such as: "the activities documented in this notebook were conducted following ER-SOP-##."

6.3.3.1 Enter any information required by a step in the procedure.

6.3.3.2 Investigators who deviate from procedural guidance must identify the step at which the deviation occurred, recording the reason for the deviation, and describing the results of the deviation. Evaluate any data produced by a deviation from procedural guidance, and enter a statement in the notebook explaining the acceptance or rejection of the data. Then, sign and date rejected data and draw a diagonal line through the rejected data.

6.4 Review of Notebooks

6.4.1 Investigators are responsible for selecting a technical reviewer to review their notebooks. The technical reviewer must have the expertise necessary to understand the work being reviewed; however, the technical reviewer must not have performed the work they review.

6.4.2 Submit notebooks for review at least every six months. More frequent reviews are done at the discretion of the investigator, for example, if there has been much activity and the notebook contains many new entries. Accompanying attachments are also reviewed.

6.4.3 The investigator is responsible for ensuring that the technical reviewers adhere to the following criterion during the review:

6.4.3.1 The reviewer determines whether the notebook entries are written in sufficient detail such that another similarly qualified individual could repeat the work described and achieve comparable results without recourse to the original investigator.

6.4.3.2 If the reviewer determines that the entries *meet* the criterion in 6.4.3.1, the following steps are performed:

a. The reviewer provides a review statement that characterizes the review (e.g., "notebook read and understood"). The reviewer records this statement after the last entry reviewed, and after the review comments.

b. The reviewer identifies the pages reviewed, signs and dates the notebook after the review statement, and returns the notebook to the investigator.

c. The investigator copies the notebook and attachment pages that were reviewed and ensures that a copy is filed with the Records Processing Facility.

6.4.3.3 If the reviewer determines that the entries *do not meet* the criterion in 6.4.3.1, the following steps are performed:

a. The reviewer provides review comments that describe the deficiencies. The reviewer records the review comments after the last entry reviewed.

b. The reviewer identifies the pages reviewed, signs and dates the notebook after the review statement, and returns the notebook to the investigator.

c. The investigator addresses the reviewer's comments and resubmits the notebook to the reviewer. Steps 6.4.3.1 through 6.4.3.3 are repeated until the notebook meets the criterion in 6.4.3.1.

NOTE: Generally, notebooks that have not had entries within the last year should be reviewed and submitted to the Records Processing Facility as a record. However, some notebooks for continuing investigations may be kept active for longer periods. Attachments are usually submitted with a notebook, except when the attachments contain information that is being carried forward to other notebooks.

7.0 REFERENCES

LANL-ER-SOP-01.04, R0, Sample Control and Field Documentation

8.0 RECORDS

It is the responsibility of the notebook author to ensure that the record package generated as a result of this procedure is submitted to the Records Processing Facility. The package should include:

- Copy of completed and reviewed notebook.
- Attachments to notebook, as appropriate.

9.0 ATTACHMENTS

None.

Los Alamos National Laboratory **Environmental Restoration Program** Standard Operating Procedure	No: LANL-ER-SOP-04.01 Rev: 0

Drilling Methods and Drill Site Management

	(Print Name)	(Signature)	(Date)
Preparer:	Sandra Wagner	Sandra Wagner	12-24-91
Quality Review by:	Larry Maassen	Larry Maassen	1-22-92
Technical Review by:	Sue J. Goff	Sue J. Goff	1/23/92
PM ~~QPPL~~ Approval:	Robert W Vocke	Robert W Vocke	3-4-92
QPPL ~~PM~~ Approval:	Karen L Warthen	Karen L Warthen	3/4/92

Effective Date: 3-16-92

Drilling Methods and Drill Site Management

Table of Contents

1.0 PURPOSE 2

2.0 SCOPE 2
- 2.1 Applicability 2
- 2.2 Training 2

3.0 DEFINITIONS 2

4.0 BACKGROUND AND/OR CAUTION 3

5.0 EQUIPMENT 7

6.0 PROCEDURE 7
- 6.1 Preparation 7
- 6.2 Operation 8
- 6.3 Post-operation 9

7.0 REFERENCES 9

8.0 RECORDS 10

9.0 ATTACHMENTS 10

Drilling Methods and Drill Site Management

1.0 PURPOSE

The purpose of this procedure is to describe drilling methods that may be used during a field effort and to define the measures necessary for implementing a Drilling Package to meet the subsurface sampling requirements for an operable unit (OU) as a part of an Resource Conservation and Recovery Act (RCRA) Facility Investigation (RFI).

2.0 SCOPE

2.1 Applicability

This procedure is applicable to the Field Team Leader (FTL) involved in soil or rock boring for the Environmental Restoration (ER) program.

2.2 Training

The FTL is responsible for monitoring the proper implementation of this procedure. All field team members should document that they have read and understand this procedure and the procedures in Section 1.0, General Instructions.

3.0 DEFINITIONS

A. Annulus: The space between the drill string or casing and the wall of the borehole or outer casing.

B. Auger Flights: Winding metal strips welded to the auger sections that while being rotated, carry soil to the surface

C. Bailer: A long narrow bucket-like device with an open top and a check valve at the bottom that is used to remove water and/or cuttings from the borehole.

D. Casing: Casing for drilling purposes is usually seamless pipe constructed as a tube from hot metal into various diameters.

E. Center Plug: A plug inserted into the hollow center of a cutter head that prevents soil from coming up inside an auger.

F. Cutter Head: A special auger bit that is attached to the leading auger flight section and cuts a hole for the auger to follow.

G. Drill Bit: The cutting tool attached to the bottom of the drill stem.

H. Drill Collars: A heavy walled length of pipe. One or more drill collars are used to concentrate weight just above the drill bit to help keep the borehole straight.

I. Drill Rods or Drill Pipe: Special pipe used to transmit rotation from the rotation mechanism to the bit. The rods also transmit weight to the bit and conveys air or fluid which removes cuttings from the borehole and cools the bit.

J. Drilling Package: Consists of a detailed Drilling Plan and specifications to meet the sampling requirements defined in the site specific Sampling and Analysis Plan (SAP). A Geophysical Logging Plan and a Curation Plan for borehole material management may be included with this Package.

K. Drilling Summary: A primary record of well-site activity. The FTL is responsible for completing this log and will record all information pertaining to the progress of the daily drilling activities. An example of this log can be found in Attachment A.

L. Kelly: A hollow stem bar that is the main section of drill string to which the power is directly transmitted from the rotary table to the drill pipe.

M. Reamers: A type of drill bit that is used specifically for straightening, cleaning or enlarging a borehole.

N. Rotary Table: The table into which the kelly fits. The rotary table provides the power that forces the entire drill string and bit to turn on a table-drive machine.

O. Sand Pump: A bailer that is fitted with a plunger so that an upward pull on the plunger produces a vacuum that opens the valve and sucks slurried cuttings into the tubing.

P. Settling Pit: A pit provided for the temporary containment of drilling fluid before it is recirculated down the borehole and holds cuttings that drop out of the drilling fluid. The pit may be portable or a it may be excavated near the borehole and lined for temporary use. The pit should contain at least three times the volume of the material to be removed during drilling.

Q. Split Spoon: A 1 to 2 foot core barrel that can be opened to remove samples. This is a sampling method used with auger drilling. The drill rods holding the center plug and cutter are withdrawn from the borehole in sections, and the split spoon is attached, the drill string reconnected, and the sample taken.

R. Stabilizers: Drill Rods with large outside diameter dimensions used to maintain straight holes in soft formations by increasing the borehole wall contact.

4.0 BACKGROUND AND/OR CAUTION

Various drilling methods have been developed to achieve successful subsurface contact for retrieving suitable formation, gas and water samples. These include but are not limited to solid-stem augering, hollow-stem augering, direct rotary, reverse rotary, and cable tool drilling. Because geologic conditions range from hard rock to unconsolidated sediments, and environmental concerns are consequential, some drilling methods may be more appropriate than others.

A. Solid-Stem Augering

A boring method using single flight or continuous flight augers.

The single flight method uses one section of auger. They are commonly called earth augers or construction augers and are normally used for boring shallow, large diameter holes.

The continuous flighting method operates multiple sections of augers and is used to advance holes in stable formations. A single auger section length is generally 5-ft ; diameters range from 4 to 24 in. Borings have been advanced to 350 ft using 4-in diameter solid stem augers during investigations in the Los Alamos area. Drill rigs turn the auger sections with a rotary drive head. A hydraulic-feed mechanism pushes the auger section down or pulls it up.

A cutter head is attached to an auger designated as the lead auger. The cutter head is usually 2 in larger in diameter than the flights. As the cutter head breaks up the formation, the cuttings are brought to the surface by the flights which act as a screw conveyer.

B. Hollow-Stem Augering

The hollow-stem auger is a section of seamless steel pipe. Unlike the solid-stem auger method, drill rods can pass through the center of the hollow-stem auger section. The auger flights are welded to the pipe and act as a screw conveyer to bring the cuttings to the surface.

The lowest flight in a hollow-stem auger drill string, the lead auger, is equipped with a cutter head. The lead drill rod has a center plug which prevents cuttings from coming up inside the auger. The center plugs has an attached drill bit that helps to advance the auger.

Auger lengths are usually 5 or 10 ft and common outside diameters (OD) are 6 1/4 to 13 in (2 1/2 to 6 in inside diameter [ID]). At Los Alamos, experience has shown that depths of up to 250 ft have been drilled through volcanic tuff using 7 1/4 in OD (3.5 in ID) augers.

Hollow-stem augers can be used as temporary casing when setting wells to prevent caving of the borehole walls. A diagram of a hollow-stem auger can be found in Attachment B.

C. Direct Rotary Drilling

For this method, a borehole is drilled with a rotating bit. Cuttings are continuously brought to the surface by the circulation of drilling fluid.

Components of the rotary drilling machine may include drag bits or roller (cone) bits, reamers and underreamers, drill pipe, drill collars, stabilizers, a kelly, and a rotary table or top-head drive. A diagram of the direct rotary rig and the drill string for a direct rotary rig can be found in Attachment C.

A borehole is drilled by rotating a bit that is attached to the lead section of a drill pipe. Drilling fluid is pumped down through the drill pipe and out ports in the bit. The drilling fluid and cuttings flow upward in the annular space between the hole and the drill pipe. Drill pipe or rods must be added continuously as the borehole advances. The terms "tripping in" and "tripping out" are used to describe the process of running the drill rods into or pulling the drill rods out of the borehole, adding drill rods, taking splitspoon or core samples, or changing bits.

1. Mud Rotary

   Drilling fluids for mud rotary drilling consist of prepared mixtures of special-purpose (usually bentonite) materials and water. The ability of this fluid to lift cuttings will depend on the viscosity of the drilling fluid and the uphole velocity.

   When the cuttings are brought to the surface, they must pass through settling pits where the suspended particles settle out of the drilling fluid before mud pumps can recirculate the slurry back through the drill rods by way of a swivel hose connected to the kelly.

   The drilling fluid exerts hydrostatic pressure against the borehole walls preventing caving of the borehole walls. The fluid also forms a lining on the inside of the bore hole which may consist of small particles of clay and silt. The lining holds loose particles and crumbly material in place.

2. Air Rotary

   The direct rotary air drilling method uses air alone to lift the cuttings from the borehole. A large compressor is used to force air down the drill rods via the swivel hose that is connected to the kelly. The air passes through ports in the drill bit. As the bit cuts through the formation, cuttings are blown to the surface and collect around the top of the borehole.

   The direct rotary air method operates best in formations which are firm enough not to be destroyed by the blast of air exiting the drill bit. Casing may have to be installed in the overburden to avoid caving of the borehole wall.

   A second direct rotary method using air is called the "down-the-hole" drilling system. A pneumatic drill is operated at the bottom of the drill pipe by air pressure provided from the surface. The percussive energy of the piston striking the bit breaks the material below while the drill string is rotated to expose new surface. The air used to facilitate percussion is exhausted through the bit face and blows the cuttings away from the cutting face and up the hole to the surface.

D. Reverse Circulation Rotary Drilling

This method is similar to the direct rotary drilling method and most pieces of equipment are essentially the same with the exception that they are usually larger. Only table drive rotary machines are used in reverse circulation drilling because of the large borehole diameter and the torque required to turn the bit. Reverse circulation rotary drilling is most successful in soft sedimentary rocks and unconsolidated sand and gravel.

In reverse rotary drilling, the suction end of the centrifugal pump rather than the discharge end (for direct rotary drilling), is connected through the swivel to the kelly and drill pipe. The drilling fluid and cuttings move upward inside the drill pipe and are discharged by the pump into the settling pits. A diagram of the reverse rotary circulation system can be found in Attachment D. The drilling fluid usually consists of water without additives, however, in many cases, at a certain depth in a borehole, the mud pump can be bypassed and an air compressor can be used to aid circulation of the drill fluid.

Another type of reverse rotary drilling is the dual-wall drilling method. The dual-wall method uses flush jointed, double-walled pipe in which the drilling fluid (air or liquid) moves up by reverse circulation. However, it differs from conventional reverse circulation because the drilling fluid does not run down the outside of the drill pipe, instead the flow is contained between the two walls of the dual-wall pipe and only contacts the walls of the borehole near the bit

E. Cable Tool Drilling

The cable tool method may be best suited for drilling in boulder deposits or rock strata that are highly disturbed, broken, fissured, or cavernous.

A cable tool drilling machine also commonly referred to as percussion, spudder and churn rigs, operates by repeatedly lifting and dropping a heavy chisel-type drill bit that is suspended on a heavy string of drilling tools. In consolidated formations, the bit breaks the rock into small fragments and in unconsolidated formations, the bit primarily loosens the formation. A diagram of the cable tool drilling system and string of cable tools can be found in Attachment E. In both instances, water (generally a small amount is added if little or no water is present in the formation) is mixed with the rock/soil particles to form a slurry or sludge at the bottom of the borehole. When the accumulation of this slurry impeded the penetration rate, slurry is removed by a sand pump or bailer.

When drilling in unconsolidated formations, casing must follow closely behind the drill bit and is usually driven by an operation similar to pile driving. Initially 3 to 10 ft of casing is driven when a borehole is begun. Usually, the hole is then drilled 3 to 6 ft below the casing; the casing is then driven down to the undisturbed material and the drilling is resumed.

F. Odex/Tubex

The Odex/Tubex drilling system advances a steel casing into the hole by means of percussive energy, while simultaneously reaming the hole slightly larger than the casing via the Odex/Tubex driver (guide device) which shoulders on the casing shoe. Intermittent coring can be done when the Down-The-Hole Hammer (DTH) with pilot and reamer bit are removed from the casing. While advancing the casing, all cuttings are safely diverted from the hole and stored in plastic bags for handling.

Health and Safety concerns involve monitoring all material coming out of the borehole and the air near the top of the borehole for volatile organic compounds using portable field screening instruments. Because many potential accidents may occur during a drilling operation due to the close contact with complex heavy machinery, site workers should be aware of drilling operations at all times and read and understand the SOPs in Section 2.0, Health and Safety in the Field.

5.0 EQUIPMENT

Refer to Attachment F, Equipment and Supplies Check List for Drilling.

6.0 PROCEDURE

Operation of the drill and equipment will be in accordance with applicable indust standards and regulatory requirements.

6.1 Preparation

A. Review the site Sampling and Analysis Plan (SAP), Drilling Package, and Health and Safety Plan for specific information on field activities and verify that the drilling equipment meets specifications outlined in the Drilling Plan.

B. Ensure that approval for property access has been obtained.

C. Have the work site cleared of all brush and minor obstructions and have the location of utilities and the proposed boring areas properly staked and identified.

D. ENSURE THAT PROPOSED BORING AREAS ARE NOT TRAVERSED BY UTILITY TRANSMISSION WAYS.

E. Ensure that the equipment and supplies listed in Attachment F are in place and in working order. Modify the equipment list in Attachment F for all items that are specific to each particular job.

F. Ensure that all downhole equipment, and the drilling rig, are decontaminated prior to use (as described in SOP 02.07, General Equipment Decontamination

G. Prepare for the collection of potentially hazardous borehole materials (Refer to the SOPs in Section 1.0, General Instructions for guidance).

6.2 Operation

A. Ensure that drillsite operations are carried out as specified in the site-specific Drilling Package unless otherwise directed by the Operable Unit Project Leader. The Drilling Package will specify circulation, coring, completion and termination requirements.

1. Appropriate circulation method as specified in Drilling Plan must be followed.

   a. If drilling fluids are required, maintain portable recirculation tanks for accurate monitoring of fluid loss and contaminant control.

   b. Some air systems include an air line oil filter that requires frequent replacement to remove all oil residue from the air compressor. Describe the air system manufacturer's name, model number, air pressures used, the frequency of changing the oil filter, and the evaluation of air line filtering on the Daily Drilling Summary.

2. If coring is specified:

   a. Casing may be required for the full depth of the overburden (see Drilling Plan).

   b. Use appropriate drill rods, core barrels, and samplers.

   c. Upon removal of the core barrel, or samplers, from the drill hole, the crew should remove inner tube.

   d. The site worker is to take possession of the core and handle it in accordance with the curatorial plan and appropriate curatorial SOP's in Section 12.0.

3. If the borehole is to be completed as a monitoring well, review SOP 05.01, Monitoring Well Construction.

4. The termination of any boring should be in accordance with the SAP or approved by the OUPL.

B. Complete Daily Drilling Summaries. Verify that a detailed drilling report is being maintained. Sign and initial all pages.

C. Ensure that sampling equipment is decontaminated between sampling events (as described in SOP 02.07, General Equipment Decontamination).

D. Ensure that borehole materials are field screened for hazardous and radioactive constituents.

E. If borehole materials prove hazardous, take appropriate action for handling. Handle hazardous drillhole materials according to procedures established in SOPs in Section 1.0, General Instructions.

F. Ensure that a Chain-of-Custody/Request for Analysis form is completed for all analytical samples and accompanies the samples to the Sample Coordination Facility (SCF).

G. Monitor the collection and containerizing of all excess soil cuttings, waste materials, and decontamination solutions for proper disposal, as described in SOP-01.06, Management of RFI-Generated Waste.

H. If it is determined that geophysical logging and drillhole testing are to be done, coordinate these activities at the appropriate time.

6.3 Post-operation

A. Ensure that all drill site equipment is accounted for, decontaminated, and ready for shipment.

B. Ensure that the site is restored to predrilling conditions or as specified in the SAP.

C. Make sure all borehole locations are properly marked and the location identification is readily visible on the location stake.

D. Record all cleanup and hole abandonment information and note any uncompleted work (like site restoration or long-term monitoring) on the Daily Drilling Summary.

7.0 REFERENCES

Procedures directly associated with this procedure that should be reviewed prior to drilling are:

LANL-ER-SOPs in Section 1.0 General Instructions
LANL-ER-SOP-1.06, Management of RFI-Generated Waste
LANL-ER-SOPs in Section 2.0, Health and Safety in the Field
LANL-ER-SOP-05.01, Monitoring Well Construction
LANL-ER-SOPs in Section 12.0, Curatorial Management Activities

Driscoll, Fletcher G., 1984, Ground Water and Wells, Johnson Division, St. Paul, Minnesota, pps 268-313.

Environmental Monitoring Systems Laboratory. 1989. Handbook of Suggested Practices for the Design and Installation of Ground Water Monitoring Wells. EPA 600/4 - 89/034.

U.S. Environmental Protection Agency. December, 1987. A Compendium of Superfund Field Operations Methods. EPA /540/ p.87/001.

8.0 RECORDS

Completed Core Log Forms.
Completed Bit Cuttings Log Form.
Completed Daily Activity Log.
Completed Daily Drilling Summary.
Completed Chain-of-Custody/Request for Analysis form.

9.0 ATTACHMENTS

A. Daily Drilling Summary

B. Diagram of a Hollow Stem Auger

C. Diagram of a Direct Rotary Drill Rig and a Drill String

D. Diagram of a Reverse Rotary Circulation System

E. Diagram of a Cable Tool Drilling System and a String of Cable Tools

F. Equipment and Supplies Checklist for Drilling

Los Alamos National Laboratory
Environmental Restoration
DAILY DRILLING SUMMARY

Date: _____ Sheet _____ of _____

Technical Area _____ Operable Unit _____

Site Work Plan: _____

Signature: _____

BOREHOLE INFORMATION

Borehole ID	Drilled Interval	Shift Start Date	Shift Time	Completed By	Date	Checked By	Date

SUMMARY OF ACTIVITIES _____

GEOLOGIC INFORMATION _____

RUN INFORMATION

#	Interval	Cut	Recovered	Unrecovered	Unrecovered Interval	% Recovered	Verified By
TOTAL							

EXAMPLE

DIAGRAM OF A HOLLOW STEM AUGER

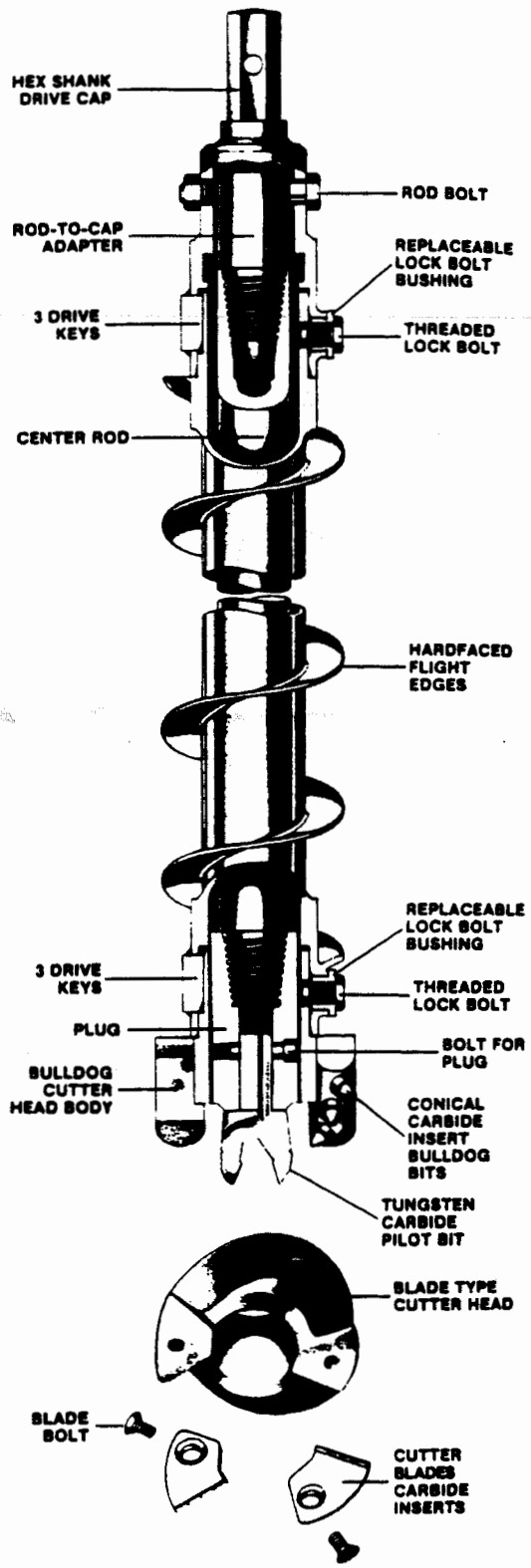

DIAGRAM OF A DIRECT ROTARY DRILL RIG AND A DRILL STRING

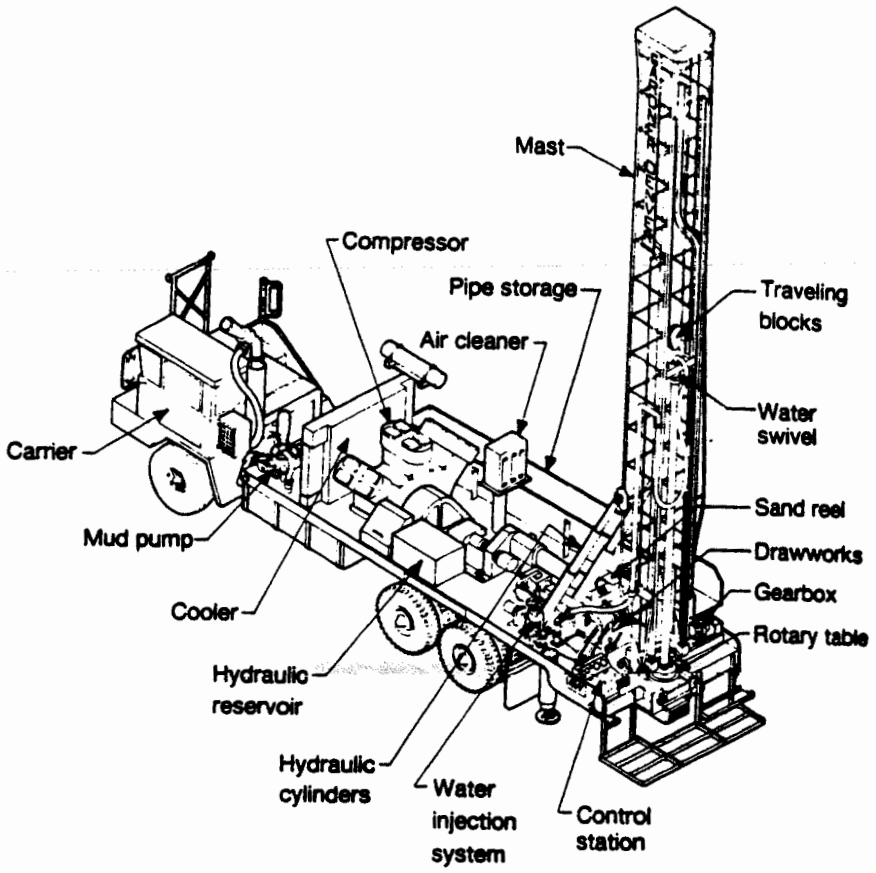

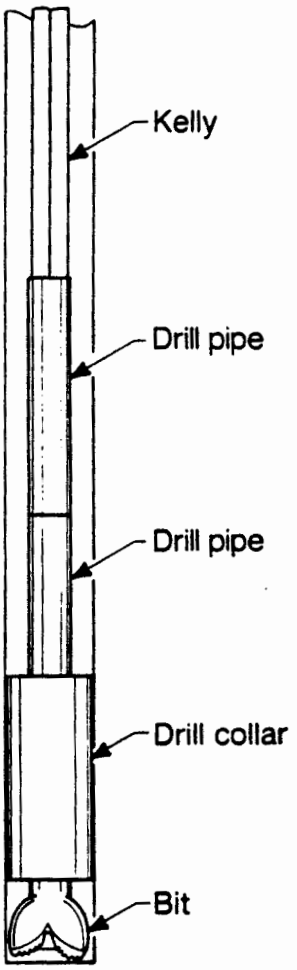

DIAGRAM OF A REVERSE ROTARY CIRCULATION SYSTEM

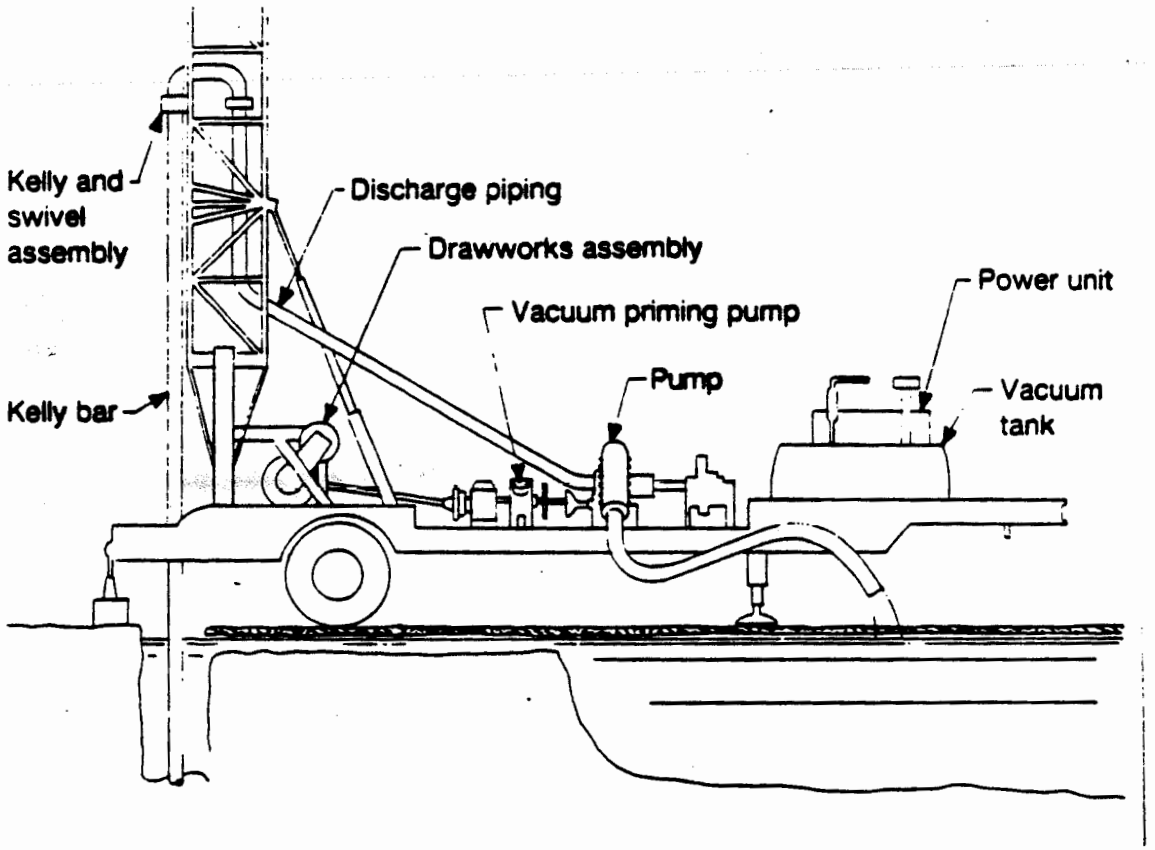

DIAGRAM OF A CABLE TOOL DRILLING SYSTEM AND A STRING OF CABLE TOOLS

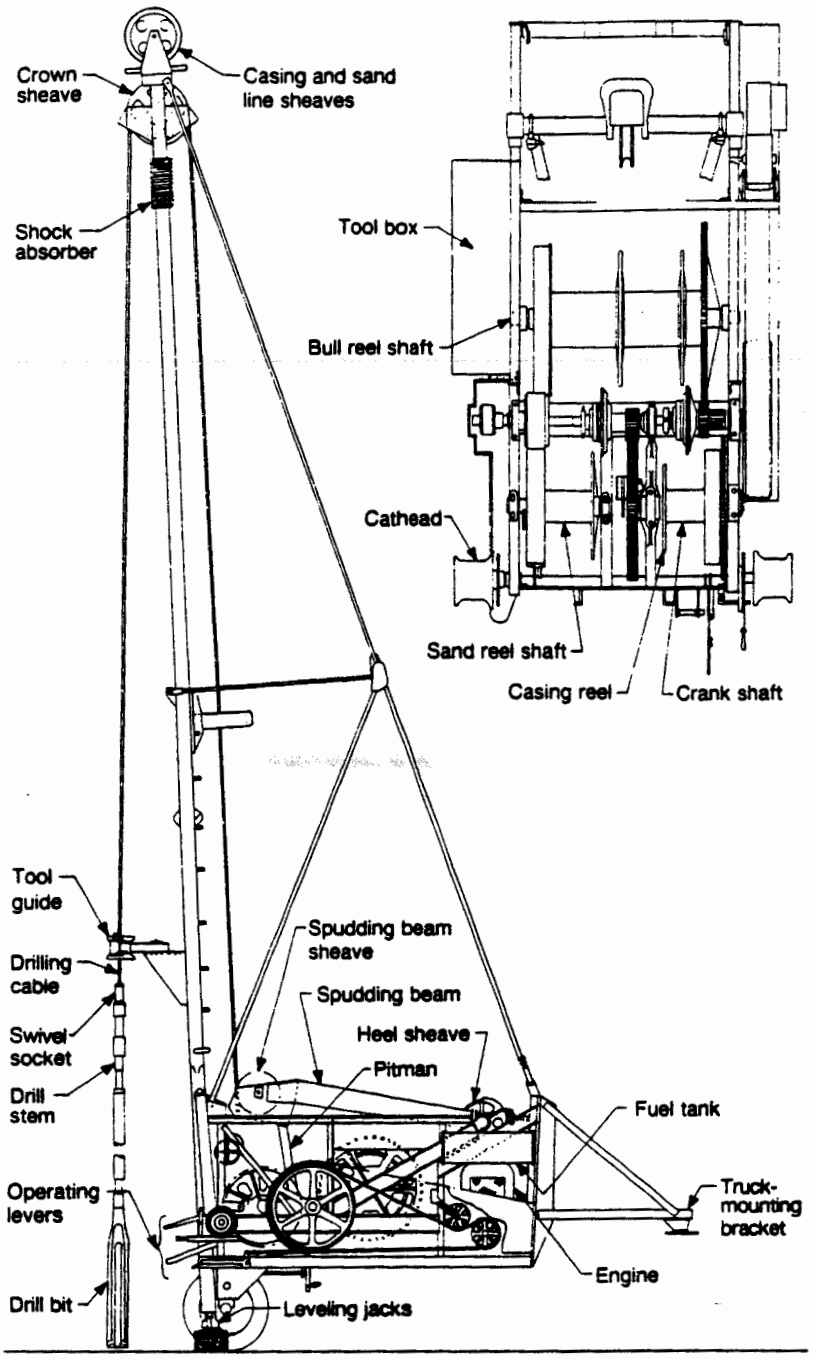

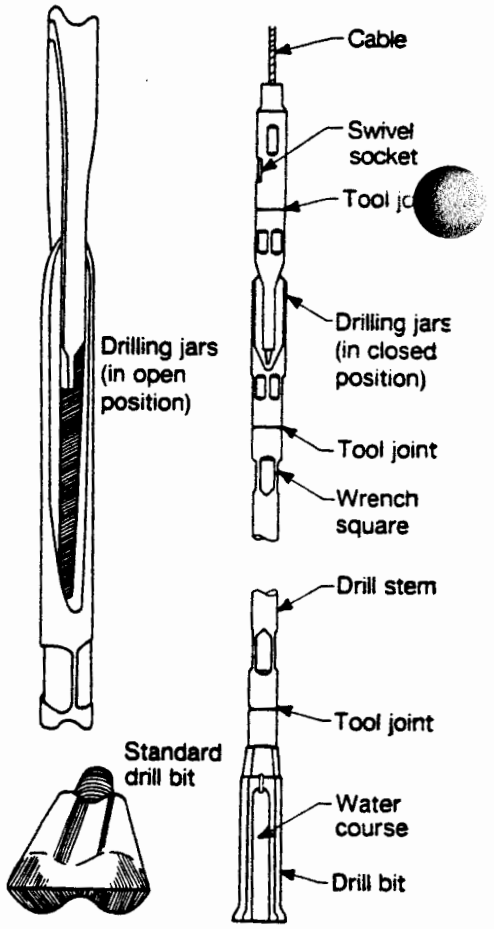

Los Alamos National Laboratory
Environmental Restoration
EQUIPMENT AND SUPPLIES CHECK LIST FOR DRILLING

	GENERAL		ADDITIONAL SITE-SPECIFIC ITEMS
_____	Hard hat	_____	_____
_____	Safety glasses	_____	_____
_____	Gloves	_____	_____
_____	Steel-toed boots	_____	_____
_____	Hearing protection	_____	_____
_____	Coveralls	_____	_____
_____	Sample containers	_____	_____
_____	Appropriate clothing	_____	_____
_____	Sprayer with clean potable water for dust control	_____	_____
_____	Any applicable licenses and permits	_____	_____
_____	Camera and film	_____	_____
_____	Measuring tape (tenths)	_____	_____
_____	Plastic sheets	_____	_____
_____	Core boxes	_____	_____
_____	Polystryene core cradles	_____	_____
_____	Large black permanent marker	_____	_____
_____	Strapping tape	_____	_____
_____	Hand knife	_____	_____
_____	Rock hammer	_____	_____
_____	Any additional supplies listed in associated procedures, as needed, or equipment specified in the Health and Safety Plan	_____	_____

Los Alamos National Laboratory **Environmental Restoration Program** **Standard Operating Procedure**	No: LANL-ER-SOP-04.04 Rev: 0

General Borehole Logging

Prepared by	J.G. CONAWAY (Print Name)	J.G. Conaway (Signature)	16 Mar 93 (Date)
Quality Review by	Larry Maassen (Print Name)	Larry Maassen (Signature)	5 April 1993 (Date)
Technical Review by	Sue J. Goff (Print Name)	Sue J. Goff (Signature)	March 30, 1993 (Date)
PM Approval	Robert W Vocke (Print Name)	Robert W Vocke (Signature)	5/24/93 (Date)
QPPL Approval	A.E. NORRIS (Print Name)	A.E. Norris (Signature)	May 24, 1993 (Date)

Effective Date: June 25, 1993

GENERAL BOREHOLE LOGGING

Contents

1.0 PURPOSE 2

2.0 SCOPE 2
- 2.1 Applicability 2
- 2.2 Training 2

3.0 DEFINITIONS/ABBREVIATIONS/ACRONYMS 2
- 3.1 Definitions 2
- 3.2 Abbreviations and Acronyms 5

4.0 BACKGROUND AND/OR CAUTION 5
- 4.1 Health and Safety Concerns 5
  - 4.1.1 Machinery 5
  - 4.1.2 Electrical Devices 5
  - 4.1.3 Radioactive Sources 6
  - 4.1.4 Weather 6
  - 4.1.5 Contamination 6
  - 4.1.6 Other Hazards 6
- 4.2 Overview of Borehole Logging 6
  - 4.2.1 Introduction 6
  - 4.2.2 Types of Logs 7
    - 4.2.2.1 Contaminant Mapping Logs 7
    - 4.2.2.2 Engineering Logs 7
    - 4.2.2.3 Borehole Samples 7
  - 4.2.3 Calibration 7

5.0 EQUIPMENT 8

6.0 PROCEDURE 8
- 6.1 Before Soliciting Bids on the Logging Contract 8
- 6.2 Before Letting the Logging Contract 8
- 6.3 Preparing for the Logging Operation 8
- 6.4 The Logging Operation 9
- 6.5 After the Logging Operation 10

7.0 REFERENCES 10

8.0 RECORDS 10

9.0 ATTACHMENTS 11

GENERAL BOREHOLE LOGGING

1.0 PURPOSE

The purpose of this procedure is to describe the general process for obtaining borehole logging data of acceptable quality regardless of logging system or logging contractor, to meet the site characterization and/or subsurface sampling requirements for an operable unit (OU) as part of a Resource Conservation and Recovery Act (RCRA) Facility Investigation (RFI).

2.0 SCOPE

2.1 Applicability

This procedure is applicable to the Environmental Restoration (ER) personnel involved in borehole logging for the ER Program.

2.2 Training

The Field Team Leader (FTL) is responsible for monitoring the proper implementation of this procedure. The FTL should ensure and document that relevant team members have read and understand this procedure along with all related procedures required for a safe and effective logging program and the procedures in Section 1.0, General Instructions.

In addition to this General Borehole Logging Standard Operating Procedure (SOP), the FTL responsible for borehole logging at a given OU should be familiar with the following documents:

- Other SOPs,
- Borehole Logging Technical Specifications (see definitions), and
- Contractor-Specific Logging Procedures (see definitions).

NOTE: This document contains general health and safety information. All SOPs in Section 2.0, Health and Safety in the Field must be followed in addition to this SOP.

3.0 DEFINITIONS/ABBREVIATIONS/ACRONYMS

3.1 Definitions

A. Blueline - A general term for a hard copy of borehole logging data in the form of graphs of one or more logging parameters as a function of depth. Historically these have been blue-on-white prints on z-fold paper; although that format is becoming less common, the term blueline is still commonly used to denote hard copies of logs regardless of copy color.

B. Borehole corrections - Factors obtained from charts or algorithms to correct the logging data for any conditions which deviate from the conditions under which the system was calibrated; also known as environmental corrections. For example, if the system was calibrated in a 6" borehole and is being used in a 4" borehole, the results may require correction. Other such corrections include fluid invasion, mudcake, casing, borehole fluid, and so forth.

C. Borehole logging - The process of making remote measurements of physical, chemical, or other parameters at multiple depths in a borehole.

D. Borehole Logging Technical Specifications (BLTS) - Documents included in the site-specific Drilling Package which define the capabilities and data quality required of prospective logging contractors for a given OU or portion of an OU.

E. Calibration - A test or tests performed against known standards with a given logging system to verify that the system is functioning properly and to provide calibration values which allow the data from the system to be used quantitatively. Standard calibrations include shop calibrations, which are performed periodically and after any equipment modification or repair, and field calibrations which are performed immediately before and after a logging run or operation.

F. Contractor-Specific Logging Procedures (CSLP) - Documents supplied by the logging contractor and approved by the OUPL, in conjunction with the Principal Investigator (PI) for Borehole Geophysics prior to awarding the contract, which define the detailed procedures by which a given logging system will be calibrated and operated to achieve objectives for data type and quality given in the BLTS.

G. Drilling fluid - A liquid or gas circulated into the borehole during the drilling process to cool and lubricate the bit and carry cuttings out of the borehole.

H. Drilling Package - A document package including detailed drilling, borehole logging, and borehole sample curation plans as necessary to meet the sampling requirements defined in the site specific Sampling and Analysis Plan (SAP) for a given OU.

I. Fluid invasion - The migration of drilling fluid or one or more components of the drilling fluid into the pores, fractures and other openings of the formation near the borehole.

J. Instrumental drift - A systematic change in the output of a given logging system due to causes inherent in the logging system, such as changing tool temperature or deterioration of an electronic component.

K. Log header - One or more pages of information included with each blueline and with logging data recorded digitally on magnetic tapes or disks. The minimum information required in the log header is specified in the Borehole Logging Technical Specifications and includes such information as name and location of hole, logging services performed, date and time of beginning and end of log, and so forth.

L. Logging run - A single data-collecting pass with a logging tool, moving up or down the borehole or a portion of the borehole. A given logging operation will generally consist of a main run and one or more repeat runs with each logging tool.

M. Logging tool - A sonde or device which is run in a borehole to make borehole logging measurements.

N. Logging tool stack - Two or more logging tools attached together and run as a single unit to save time and improve depth correlation between logs.

O. Mudcake - A layer of mud which may be deposited on the borehole wall when the drilling fluid contains mud; when the liquid component of the mud invades the formation, the solid component may be left on the borehole wall.

P. Percussion gun - A device run on a wireline to obtain samples from a borehole wall. On a single run, multiple sample tubes or hollow shells are driven into the borehole wall at various depths by explosives and retrieved along with the samples.

Q. Repeat run - A logging run, which may cover only a portion of the depth range of the main logging run, used to help judge data repeatability as a check on instrument drift and other data quality problems. The repeat run may be performed before or after the main run.

R. Verification - A test or tests, generally performed before and after logging in lieu of a calibration, to ascertain whether the logging system is operating properly. The verification differs from a calibration in that it does not provide updated system calibration values.

S. Wireline - The logging cable used to support the logging tool and carry electrical power and signals between the tool and surface instrumentation.

3.2 Abbreviations and Acronyms

BLQR	Borehole Log Quality Report
BLTS	Borehole Logging Technical Specifications
CSLP	Contractor-Specific Logging Procedures
ER	Environmental Restoration
FTL	Field Team Leader
LANL	Los Alamos National Laboratory
OU	Operable Unit
OUPL	Operable Unit Project Leader
RCRA	Resource Conservation and Recovery Act
RFI	RCRA Facility Investigation
SAP	Sampling and Analysis Plan
SCF	Sample Coordination Facility
SOP	Standard Operating Procedure
TTL	Technical Team Leader

4.0 BACKGROUND AND/OR CAUTION

4.1 Health and Safety Concerns

Potential hazards during a logging operation are associated with machinery, electrical devices, radioactive sources, weather, possible contact with contaminants, and other hazards. Some of these hazards are listed below; this is not a comprehensive list.

4.1.1 Machinery

1. Winch problems such as drum brake failure, cable jumping flange, loss of winch power, cable "birdcaged" or tangled, and insufficient pulling power.

2. Rigging problems such as cable jumping sheave or failure of sheave wheel, tie downs, or supports.

3. Logging tool stuck in hole due to hole collapse, cable pulling out of cablehead at tool, cable key-seated.

4.1.2 Electrical Devices

1. Direct electrical hazards such as electrical shock and burns or electrical fires.

2. Indirect hazards such as failure of depth system or failure of weight system (tension).

4.1.3 Radioactive Sources

1. High-intensity, isotopic or chemical gamma-ray and neutron sources.

2. Pulsed neutron sources that may be accidentally actuated.

4.1.4 Weather

1. High winds increase machinery and electrical hazards.

2. Rain increases electrical shock hazard.

3. Lightning hazards.

4. Exposure.

4.1.5 Contamination

All material coming out of the borehole, including logging equipment, must be monitored for contamination, and the air near the top of the borehole must be monitored for volatile organic compounds. Site workers should be aware of logging operations at all times and read and understand the SOPs related to Health and Safety in the Field.

4.1.6 Other Hazards

1. Fuel fires.

2. Carbon monoxide fumes.

3. Problems on drilling rig which might affect the operation.

4. Personnel problems such as inadequate training, carelessness or inattention, impairment (medication, drugs, ailments, etc.)

4.2 Overview of Borehole Logging

4.2.1 Introduction

In ER applications, borehole logging techniques are used for the *in situ* determination of physical, chemical, geological and hydrological parameters in boreholes. Borehole measurements can be used to help solve waste cleanup problems as part of initial site characterization, during remediation, and for post-remediation monitoring.

For accurate results to be achieved with a given logging system, it is essential that the system be calibrated against accepted standards and monitored for any malfunction or significant drift of the system calibration. In addition, the data must be corrected for non-standard conditions (conditions other than those encountered in the calibration).

4.2.2 Types of Logs

4.2.2.1 Contaminant Mapping Logs

Contaminant mapping logs provide direct information on the presence of contaminants inside or outside the borehole. Borehole logging devices exist which can give estimates of concentrations of certain contaminants. Contaminant mapping logs which are not Environmental Protection Agency-approved for quantitative analysis at the present time can nonetheless be used for screening and for supplying information on contamination between the locations of physical sample points along the borehole.

4.2.2.2 Engineering Logs

This category includes all logs which are not used for contaminant mapping. Examples include caliper (borehole diameter), induction resistivity (formation electrical resistivity), and gamma-gamma density (formation bulk density).

4.2.2.3 Borehole Samples

While not strictly logs, borehole samples can be obtained by some logging contractors. Typically, these take the form of borehole fluid samples, sidewall cores, or percussion gun samples.

4.2.3 Calibration

Accurate calibrations are necessary for the data to be used quantitatively; calibrations also play an important role in monitoring tool performance over time. The CSLP must include a complete set of written calibration procedures for all logging equipment involved in quantitative measurements. The logging contractor is responsible for maintaining full and complete documentation for all calibrations for all tools and shall provide copies of these records to the FTL for transfer to the ER Records Processing Facility.

Shop calibrations traceable to accepted standards are performed at specified time intervals as well as every time a tool is modified or repaired. Field or job-site calibrations are performed immediately before

and after a logging operation or run (also known as pre- and post-log calibrations).

5.0 EQUIPMENT

The list of equipment required for borehole logging varies with the contractor and the specific log(s) being run. Refer to the BLTS and CSLP for the required lists.

6.0 PROCEDURE

Operation of the logging equipment will be in accordance with applicable industry standards and regulatory requirements.

6.1 Before Soliciting Bids on the Logging Contract

Before soliciting bids on the logging contract for an OU, detailed BLTS must be prepared. The success of the logging operation depends to a large degree on these specifications. The BLTS must define the type of logging system, the logging parameters required, precision, data accuracy and repeatability, depth accuracy, sample interval, calibration schedules and requirements, data formats and media, and so forth. The BLTS will be prepared by the Principal Investigator for Borehole Geophysics, in consultation with the FTL and OUPL.

6.2 Before Letting the Logging Contract

Specific, detailed procedures depend on the logging system and the logging contractor being used. These CSLPs must be prepared and submitted by the prospective logging contractor for approval by the OUPL in consultation with the PI for borehole geophysics before the contract is finalized. The CSLP should conform to the general procedures given in this General Borehole Logging SOP.

6.3 Preparing for the Logging Operation

The FTL has the following responsibilities:

Ensure that approval for property access has been obtained.

Review the site SAP, Drilling Package including Borehole Logging Technical Specifications, and Health and Safety Plan for specific information on field activities. Verify that the logging equipment meets specifications outlined in the BLTS. Verify that the Contractor-Specific Logging Procedures meet the specifications outlined in the BLTS for each logging method to be applied.

Have the work site cleared of all brush and minor obstructions and have the location of utilities properly staked and identified.

Ensure that the specific logging equipment to be used has been shop calibrated within the required time period prior to the logging operation as specified in the BLTS. Ensure that the calibration(s) met the accuracy requirements given in the BLTS. Ensure that the logging equipment has been shop-calibrated subsequent to any repair or modification even if the equipment is not yet due for a routine shop calibration; ensure that the calibration was within acceptable accuracy tolerances as defined in the BLTS.

Ensure that all logging equipment–including cable, cablehead, and logging tool–has been decontaminated prior to use.

Prepare to monitor borehole air and logging equipment emerging from the borehole for contamination. (Refer to the SOPs in Section 7.0, References, for guidance.)

6.4 The Logging Operation

The FTL has the following responsibilities:

Ensure that logging operations are carried out as specified in the CSLP.

Each logging tool which is to be run must be field calibrated or field verified as required in the BLTS. Generally, a field calibration or verification is required both immediately before and immediately after a logging run or runs with a given logging tool. Ensure that this process is properly carried out according to the procedures given in the CSLP and that the readings are within acceptable limits as defined in the BLTS.

Ensure that the logging equipment is decontaminated between sampling events.

If borehole samples have been obtained by the logging contractor, such as water samples, sidewall cores or percussion gun samples, ensure that borehole materials are field screened for hazardous and radioactive constituents.

If borehole materials prove hazardous, take appropriate action for handling. Handle hazardous borehole materials according to procedures established in SOPs in Section 1.0, General Instructions.

Ensure that a Chain-of-Custody/Request for Analysis form is completed for all analytical samples and accompanies the samples to the Sample Coordination Facility.

Monitor the collection and containerizing of all waste materials and decontamination solutions for proper disposal, as described in SOP-1.06, Management of RFI-Generated Waste.

6.5 After the Logging Operation

The FTL has the following responsibilities:

Ensure that log headers are correct and complete and meet the specifications given in the BLTS. Sign and date as witness.

Obtain copies of field data in hard copy form (bluelines) and digital form (magnetic tapes or other form), as specified in the BLTS. These field copies are an important part of the data quality record, even though reprocessed data may be submitted by the logging contractor at a later time or date.

Ensure that all borehole logging equipment is accounted for, decontaminated, and ready for transport.

Ensure that the site is restored to pre-logging conditions or as specified in the SAP. Ensure that borehole is capped and/or marked as required.

7.0 REFERENCES

Procedures and documents directly associated with this procedure that should be reviewed prior to logging include the following:

Borehole Logging Technical Specifications
Contractor-Specific Logging Procedures
LANL-ER-SOPs in Section 1.0, General Instructions
LANL-ER-SOPs in Section 2.0, Health and Safety in the Field
LANL-ER-SOPs in Section 12.0, Curatorial Management Activities
LANL-ER-AP-02.1, Records Management

Useful references include:

Richard M. Bateman, 1985, "Log Quality Control," International Human Resources Devel. Corp., Boston, ISBN 0-934634-89-0, 398 pp.

Darwin V. Ellis, 1987, "Well Logging for Earth Scientists," Elsevier Science Publishing Co., Inc., 52 Vanderbuilt Ave., New York, New York, 10017

8.0 RECORDS

Hard copies of logging data ("bluelines") with completed headers, signed by logging contractor representative and FTL or other approved witness as specified in the BLTS.

Digital data on magnetic tape or as otherwise specified in the BLTS.

Completed Borehole Log Quality Report (BLQR) for each logging service run, as specified in the BLTS. Completing the BLQR is the responsibility of the FTL.

Calibration records as specified in the BLTS.

Completed Chain-of-Custody/Request for Analysis form for borehole samples, if any.

The FTL will ensure that copies of all records are conveyed to the Records Management Facility, MS M707

9.0 ATTACHMENTS

N/A

Los Alamos National Laboratory **Environmental Restoration Program** **Standard Operating Procedure**	No: LANL-ER-SOP-5.01 Rev: 0

Monitor Well Construction

	(Print Name)	(Signature)	(Date)
Prepared by	Sandra E. Wagner	Sandra Wagner	3-26-92
Quality Review by	Micheline Devaurs	Micheline Devaurs	3/26/92
Technical Review by	ALAN K. STOKER Sue J. Goff	[illegible] Sue J. Goff	[illegible] 3/17/92
PM Approval	Robert W Vocke	Robert W Vocke	5/21/92
QPPL Approval	Karen L Warthen	Karen L Warthen	5/20/92

Effective Date: 6-1-92

Monitor Well Construction

Table of Contents

1.0 PURPOSE 2

2.0 SCOPE 2
- 2.1 Applicability 2
- 2.2 Training 2

3.0 DEFINITIONS 2

4.0 BACKGROUND AND/OR CAUTIONS 3

5.0 EQUIPMENT 3

6.0 PROCEDURE 4

7.0 REFERENCES 9

8.0 RECORDS 10

9.0 ATTACHMENTS 10

Monitor Well Construction

1.0 PURPOSE

This procedure provides instructions for acceptable and consistent monitor well construction.

2.0 SCOPE

2.1 Applicability

This procedure provides instructions to the site workers who will be constructing monitor wells. All site workers must refer to the site-specific work plan for more information on the scope of work and specific requirements for monitor well construction.

2.2 Training

The field team leader is responsible for ensuring the proper implementation of this procedure. All site workers should be familiar with the objectives of the monitoring well construction, and must document that they have read and understand this procedure along with the procedures in Section 1.0, General Instructions.

3.0 DEFINITIONS

A. Annular space or annulus: The space between the borehole wall and the well casing, or the space between a casing pipe and a liner pipe.

B. Tremie pipe: A device that allows pressure grouting up, without the introduction of appreciable air pockets on the bottom; usually a small-diameter pipe, used to carry sand pack, bentonite, or grouting materials to the bottom of the borehole.

C. Bentonite: A hydrous aluminum silicate available in powder, granular, or pellet form that provides a tight seal between the well casing and borehole wall. Powder or granular form is preferred due to possible bridging problems caused by the quick swelling of the pellets. Bentonite is also added to drilling fluid to keep the borehole open. Bentonite is typically used in a 5% mixture with Portland cement to form a pumpable grout that expands as the material hardens.

D. Well screen: Perforated or wire-wrapped casing that allows fluids, but not sand pack material, to enter the well.

E. Well casing: Piping that will allow access to the fluids within the target aquifer upon completion of the well.

4.0 BACKGROUND AND/OR CAUTIONS

A properly constructed monitor well allows access to aquifer fluids for the collection of ground water samples and determining aquifer characteristics. Ideally, the well should not alter the medium that is being sampled.

Drilling Package - The site-specific documentation provides information about the scope and details of monitor well construction at a given site. The following is a list of critical issues involved in monitor well construction:

- Soil boring or rock coring technique
- Casing and screen materials, including composition and dimensions
- Screen-slot size, screen type, and screen interval
- Filter pack composition, gradation, and dimensions.

Refer to the site-specific documents for the location and specifications of the wells to be installed. Wells are generally installed as components of monitoring systems in accordance with EPA guidance (EPA 1986); Hazardous and Solid Waste Amendments Permit, Module VIII, May 1980; and New Mexico State Engineer regulations.. Borehole drilling, development of the wells, collection and measurement of samples, and the documentation of data will be performed as described in the associated procedures.

5.0 EQUIPMENT

The materials necessary for following this procedure are listed in three categories: health and safety; supplies; and equipment. Additional equipment should be identified on the Daily Activity Logs, the Well Completion Information form (Attachment A) or the Borehole/Well Construction Field Data Log form (Attachment B).

Health and Safety

- Hard hat
- Safety glasses
- Gloves
- Steel-toed boots
- Hearing protection
- Coveralls, splash and cold weather protection

Supplies

- Silica sand
- Portland cement
- Approved water supply, preferably untreated
- Well screen
- Sample containers, 1/2- and 1-pint size
- PVC casing, screen, cap and bottom plug for each well

- Prepacked PVC screen sections, if needed
- Mechanical centralizers
- Bentonite pellets or crushed bentonite (pure montmorillonite)
- 5 foot length of pipe (black iron or galvanized, 6 or 8 inch diameter, according to needs)
- Guard posts

Equipment

- Drill rig and accompanying equipment
- Tremie pipe
- Tape measure
- Nylon rope
- Protective steel casing
- Locking cap
- Padlocks
- Surveying pins

6.0 PROCEDURE

1. Coordinate schedules/actions with the installation staff.

2. In all cases, the minimum physical protection should include a hard hat, safety glasses, gloves, steel-toed leather boots, hearing protection, if indicated by Industrial Hygiene Monitoring, and coveralls for splash and cold weather protection.

3. Research site hydrogeology to estimate key parameters (for example, anticipated aquifer depth and thickness, types of contaminants, and grain-size distribution).

4. If water/sand slurry or grout is required, the source(s) of any water used must be approved, based on potential contamination, by the field team leader before field operations. A potable, nonchlorinated source is preferred.

5. Any use of solvents, glues, or cleaners are prohibited for use less than grade unless otherwise stated in the specifications. If official permission is received for their use, describe the material and include the manufacturer and type (specification). The use of pipe dope, grease, soap, and oil is also prohibited for any purpose on site.

6. Monitor borehole opening and the breathing zone according to SOP-10.03, Monitoring of Combustible Gas Levels; SOP-10.01, Monitoring of Organic Vapors with a Photoionization Detector; and SOP-10.02, Monitoring of Organic Vapors with a Flame Ionization Detector. Perform readings as often as necessary to ensure the safety of workers. Record all measurements on the data collection forms included with these SOPs.

7. Record all field measurements and comments on the Well Completion Information (Attachment A) or the Borehole/Well Construction Field Data Log form (Attachment

B). Fill out the forms as described in Attachment F. Use the Daily Activity Log in SOP-1.01.01 with these forms.

8. Record pertinent information on the diagram of the well installation on the Well Completion Information form. At a minimum, show the depth from surface to the bottom of the boring, sump depth and location, screen location, coupling design and location, granular backfill, seals, grout, cave-in, centralizers, and the height of the riser above the ground surface. Record the actual composition of the grout, seals, and granular backfill on each Borehole/Well Construction Field Data Log form. Include the screen slot size (in inches), slot configuration, and screen manufacturer.

9. If appropriate, include the protective casing detail on all well sketches.

10. The following is a list of instructions for using a sand pack, if required:

    a. The average grain size of the sand is based on the grain-size distribution that matches screen size and medium being monitored in the screened formation. Use sand having a gradation that will allow less than 10% of filler pack material to pass through the screen slots.

    b. Take at least one sample (1/2- to 1-pint size) from each shipment of granular material, assign an identification number, and store it with the soil samples. Describe each sample in terms of lithology, grain-size distribution, and source (company from which it was purchased and the pit or quarry of origin). Record the identification number on the sketch of each installation for which that material was used.

    c. The specifications of the proposed sand-pack material should be submitted by the contractor for approval before use. Use well-sorted (poorly graded) sand, which is clean, inert, and siliceous.

11. Typical well construction features are shown in Attachments C and D. When installed as a piezometer or well point (for water levels only), the well configuration may vary significantly from these drawings. After well development is complete, indicate the static water level on the well construction diagram.

12. In the event that a predominantly fine-grained, water-bearing unit is encountered, it may be desirable to construct a monitor well using a factory completed PVC Schedule 40 screen and filter pack subassembly. This type of device, available from several vendors, consists of two PVC well screens separated by a prepacked sand filter of inert silica sand. Various sand pack gradations are available. This type of device has been demonstrated to be effective in the mitigation of ground water sample turbidity problems, or where well installation is impeded by difficult physical conditions, such as adverse hydrostatic pressures.

13. The prepacked screen subassembly is attached to the solid well PVC casing in the same manner as a conventional screen. The fine-grained formative materials are

allowed to collapse against the prepacked well screen. Final well construction tasks are identical to those for a conventional well, including the placement of an expansive bentonite seal, grouting, security pipe/locking cap and surface pad.

14. When applicable (i.e., when not installing through hollow stem auger), use centralizers (not less than one every 20 ft) for the uniform and complete annular filling by granular backfill, seal, and grout materials. Fasten centralizers to the well casing by mechanical fasteners that are radially spaced at 120° or 90° intervals. On the Borehole/Well Construction Field Data Log form (Attachment B), or the Daily Activity Log provide a description of the centralizers and their locations.

15. If specified, place a sand pack (inert silica) in the annulus next to the well screen in all monitor wells. The sand pack ensures a continuous flow capability from the natural formation to the well bore.

    a. Fill the annulus between the well screen and borehole wall with silica sand.

    b. For wells deeper than 30 ft, or as determined by the field team leader, use a Tremie pipe to place the sand pack.

    c. It is necessary to pump sufficient sand slurry to cover the screen after the sand pack has densified and settled. If well specifications are not stated in the site documents, a general rule of thumb is to apply a 2-ft-thick layer of sand slurry over the top of the screen.

    d. Ascertain the depth of the top of the sand with an acceptable measuring device and verify the thickness of the sand pack. If necessary, add more sand to bring the top of the sand pack to the proper elevation, but in no case may more than two feet of sand be added above the well screen.

    e. Under no circumstances should the sand pack extend into any aquifer other than the one to be monitored. In most cases, the well design can be modified to allow for a sufficient sand pack without the threat of cross flow between producing zones.

    f. The field team leader is the only individual authorized to modify an existing well design. Any modification should be noted on the Borehole/Well Construction Field Data Log or the Daily Activity Log.

    g. If specified in the project documents, partial development of the sand pack may be required before installation of bentonite seal and grout.

16. Place a bentonite pellet seal between the sand pack and grout to prevent infiltration of cement into the filter pack and the well. In special circumstances, an open borehole may be drilled to a depth below where the screen is set. If grout is used to seal off a lower aquifer or as backfill up to the proper level, place a bentonite seal above the grout before the casing, screen, and sand pack are introduced. Allow the

grout to set up for a minimum of 24 hr before placing the seal. Place the bentonite seal in the borehole as described below.

a. Fill the annulus between the well casing and borehole above the filter pack with a bentonite seal at least 2 ft thick (vertically).

b. Use bentonite pellets or crushed bentonite. The pellets should have a minimum purity of 90% montmorillonite clay and a minimum dry bulk density of 75 lb/ft3 for 3/8-inch to 1/2-inch pellets (as provided by American Colloid) or the equivalent. Pour the bentonite pellets directly down the annulus. No pellets will be placed into the well bore. Place a cap over the top of the well casing before pouring the bentonite pellets from the bucket. Pour the pellets from different points around the casing to ensure even application. A Tremie pipe may be used to redistribute and level the top of the seal.

c. For wells deeper than approximately 30 ft, where no threat of borehole collapse exists, the bentonite may either be poured as pellets or introduced as a slurry through a Tremie pipe. The method should be determined by the site manager after evaluating the condition of the well and borehole wall. If there are no centralizers in the upper portions of the casing, manipulate the casing to prevent pellets from hanging up in the narrow annulus and to allow them to settle to the bottom as rapidly as possible.

d. If a slurry of bentonite is used as an annular seal, prepare the slurry by mixing powdered or granular bentonite with potable water. The slurry should be of sufficiently high-specific gravity and viscosity to prevent its displacement by the grout that will be placed above. Regardless of depth and depending on fluid viscosity, a few handfuls of bentonite pellets may be added to solidify the surface of the bentonite slurry as a precaution. In addition, a few feet of a sand pack may be emplaced above the bentonite slurry to prevent movement of the overlying grout into the saturated zone.

e. Before placing the bentonite seal, be sure the filter pack has settled by measuring the depth of the top of the sand with the Tremie pipe. The sand pack should provide an adequate cover over the screen.

f. Visually check the condition of the slurry by pumping into a bucket or onto the ground. Retract the Tremie pipe 3 ft from the top of the sand pack and begin pumping.

g. In materials that will not maintain an open hole, leave the hollow-stem augers in the hole during filter pack placement and bentonite seal placement to the extent practical. Maintain the bentonite in the auger a small distance for even placement, as the augers are removed.

h. Measure the distance to the top of the seal using an acceptable measuring device to verify that the proper thickness of seal has been placed in the

annulus.

i. Until the specified quantity of bentonite has been placed in the well annulus, repeat the application and verification.

17. Allow a minimum of 24 to 48 hours after the bentonite seal has been placed, then place grout from the top of the bentonite seal to the surface. Use grouts as specified in project documents. Place grout in the monitoring wells as described below.

    a. Fill the annulus between the well casing and borehole wall with grout.

    b. Pump the grout through the Tremie pipe to the bottom of the open annulus until undiluted grout flows from the annulus at the ground surface.

    c. The grout should consist of a neat cement and bentonite mix, applied according to the EPA (1986) guidelines. Use only grout mixed with approved water.

    d. In materials that will not maintain an open hole, leave the hollow-stem augers in the hole during grouting to the extent practical. Remove them as the level of the grout rises above the bottom of the augers.

    e. If necessary, add more grout to compensate for the removed casing or auger and Tremie pipe and to ensure that the top of the grout is at or above the ground surface.

    f. The protective casing should now be placed over well casing.

    g. After the grout has set (about 48 hr), fill any depression in the grout caused by settlement with a grout mix similar to that previously described.

18. Install protective casing around all monitor wells. The minimum elements in the protection design include the following:

    a. The protective steel casing and locking cap should be weatherproof and should be secured to the casing by padlocks.

    b. Set the protective casing (5-ft minimum length) so that the top of the pipe is about 1.5 to 3 ft above the ground surface and grout it in place as shown in Attachments D and E.

    c. Use the 8-inch-diameter pipe for 4-inch wells and 6 inches for 2-inch wells (depending on approved borehole size). A drain hole near ground level that is 0.5 inch in diameter is permitted.

    d. Provide a protective steel cap or equivalent device and secure it to the top of each protective casing.

e. Mark the location ID on the inside and outside of the cover with indelible ink.

f. Form and pour the concrete protective pad around the protective steel casing. Pad dimensions are typically not less than 2 ft by 2 ft by 0.5 ft. The concrete protective pad, once constructed, will form a continuous concrete seal extending below the maximum anticipated depth of frost penetration.

g. Place surveying pin in the concrete protective pad.

19. In addition to the protective casing, the installation of guard posts is recommended in areas where vehicle traffic might pose a hazard.

    Guard posts shown in Attachment E consist of steel posts that are at least 3 inches in diameter or tee-bar driven steel posts. Three guard posts are radially located 4 ft around each well and driven 2 ft below the ground surface, having a minimum of 4 ft above the ground surface with flagging in areas of high vegetation. Each post may be cemented in place.

20. In the event that a borehole must be abandoned for failure to reach the specified depth (or any other cause), over-ream the borehole and apply grout with a Tremie pipe from the bottom up, under continuous positive pressure, in a single monolithic effort.

21. In the event that a well must be abandoned for failure to reach specified depths, los of tools, or inadvertent contamination, rip the screened interval with an appropriate tool. Grout the well with a Tremie pipe (from the bottom up).

22. Ensure all equipment is accounted for and determine if any equipment needs to be decontaminated.

23. Inventory equipment and supplies. Repair or replace all broken or damaged equipment. Replace expendable items. Return equipment to the equipment manager and report incidents of malfunction or damage.

24. Make sure all monitoring wells are properly labeled and the location ID is readily visible on the protective casing.

25. Ensure that well surveying for horizontal control and datum determination are completed and that the necessary information is entered on the Well Completion Information form.

7.0 REFERENCES

LANL-ER-SOPs in Section 1.0, General Instructions
LANL-ER-SOP-4.01, Drilling Methods and Drill Site Management
LANL-ER-SOP-10.02, Monitoring of Organic Vapors With a Flame Ionization Detector
LANL-ER-SOP-10.03, Monitoring of Combustible Gas Levels

Barcelona, M. J., J. P. Gibb, J. A. Helfrich, and E. E. Garske. 1985. "Practical Guide to Ground water Sampling." US. Environmental Protection Agency report EPA/600/2-85/104. US. Government Printing Office, Washington, DC.

DOE. 1985. "Field Technical Representative Manual." 2nd ed. Uranium Mill Tailings Remedial Action Project. US. Department of Energy, Albuquerque, New Mexico.

EPA. 1986. RCRA Ground Water Monitoring Technical Enforcement Guidance Document. OSWER, Washington, DC.

EPA. 1990. Handbook of Suggested Practices for the Design and Installation of Ground water Monitoring Wells. EPA/600/4-89/034. Las Vegas, Nevada.

8.0 RECORDS

Records generated as a result of the use of this procedure:

Completed Daily Activity Log, including any deviations or other pertinent information
Completed Well Completion Information Form
Completed Borehole/Well Construction Field Data Log Form
Completed Daily Drilling Summary Form

Other forms that may be necessary are the health and safety forms from the following procedures:

If other records are generated, they are to be paginated and attached to the records in the record package.

9.0 ATTACHMENTS

Attachment A - Well Completion Information Form
Attachment B - Borehole/Well Construction Field Data Log
Attachment C - Typical Construction of Overburden Well
Attachment D - Typical Construction of Bedrock Well
Attachment E - Post Placement Around Well
Attachment F - Data Form Completion

Los Alamos National Laboratory Environmental Restoration
Well Completion Information Form

Site Work Plan _____

Technical Area _____ Inclusive Sample Identifier:

Operable Unit _____ _____ to _____

Signature _____ Date _____

Owner _____ Installer _____ Installation Date _____

Filter Pack Length (ft) _____ Well Type Classification _____

Formation of Completion (US/RC)) _____ Well Completion Method _____

Zone of Completion _____

Casing Elevation (ft MSL) _____ Open/Screen Depth (FTFD)* _____

Casing Depth (ft) _____ Open/Screen Length (ft) _____

Casing Diameter (in.) _____ Open/Screen Area (in^2/ft) _____

Seal End Depth (FTFD) _____ Flow Relationship _____

Screen Material _____ Cap Material _____

Riser Material _____ Cap Type _____

WELL TYPE CLASSIFICATIONS

M - Monitor Well
P - Production Well
T - Test Well
O - Other (specify) _____

FLOW RELATIONSHIP

U - Upgradient
D - Downgradient
C - Cross Gradient
O - Onsite
N - Not known
B - Background

CAP TYPE

LC - Locking
SL - Slip-on
TR - Threaded
NO - None
SC - Screw-on
OT - Other (specify) _____

WELL COMPLETION METHODS

C- Porous Concrete
F - Gravel Pack
H - Horizontal Galley
O - Open End
P - Perforated/Slotted
S - Screen
T - Sand Front
W - Walled
X - Open
O - Other (specify) _____

CAP MATERIALS

CT - Concrete
CR - Copper
FI - Fiberglass
GI - Galvanized Iron
WI - Wrought Iron
SS - Stainless Steel
OM - Other Material
TE - Teflon
PV - PVC
RK - Rock or Stone
ST - Steel
TI - Tile
CS - Costed Steel
WD - Wood
NO - None
OT - Other (specify) _____

ZONES OF CONCERN

A - Artesian
C - Confined
H - Acquitard
G - Aquiclude
M - Multisystem
S - Semi-confined
U - Unconsolidated

* FTFD = feet from datum.

Los Alamos National Laboratory Environmental Restoration
Well Completion Information Form (continued)

Site Work Plan _____

Technical Area _____

Inclusive Sample Identifiers

Operable Unit _____

_____ to _____

Signature _____ Date _____

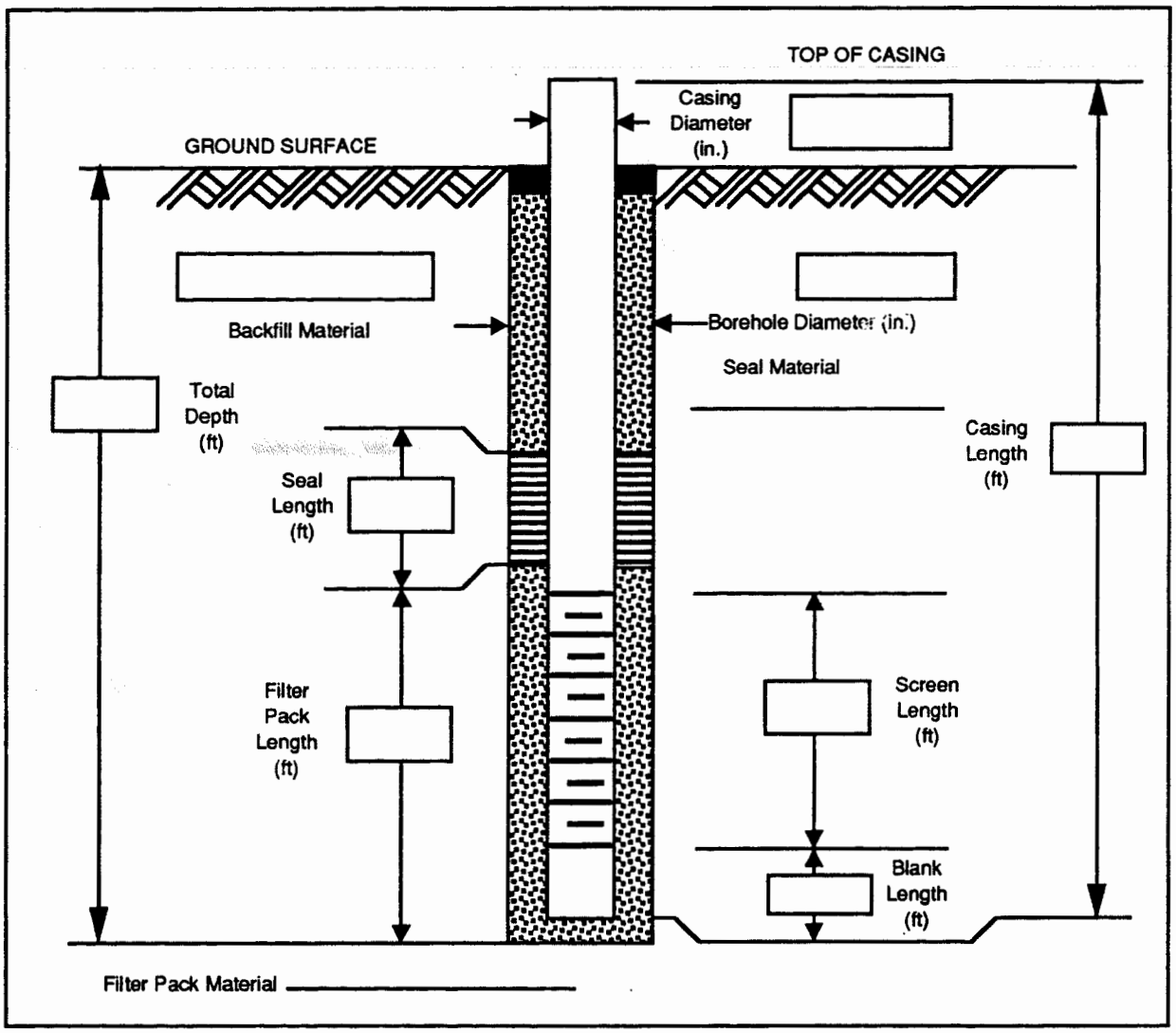

Comments _____

Los Alamos National Laboratory Environmental Restoration
Monitor Well Construction Field Data Log

Sheet _____ of _____

Site Work Plan _____

Technical Area _____

Inclusive Sample Identifiers

Operable Unit _____ _____ to _____

Signature _____ Date _____

BOREHOLE SUMMARY

BIT TYPE	HOLE DIAMETER (in.)	END[1] DEPTH (ft)	FLUID TYPE

CASING SUMMARY

CASING TYPE	DESCRIPTION	DIAM. (in.)	END[2] DEPTH (ft)

P - Protective S - Screen O - Open N - None

[1] Depth from Ground Surface [2] Depth from Toe of Casing

WELL CONSTRUCTION

TYPE[1] CODE	DESCRIPTION	END[1] DEPTH (ft)

B - Backfill S - Seal F - Filter Pack [1] Depth from Ground Surface

CONSTRUCTION TIME LOG

ACTIVITY	START DATE	START TIME	END TIME
DRILLING			
CASING			
FILTER PACK			
SEAL			
BACKFILL			
DEVELOPMENT			
OTHER			

WELL DEVELOPMENT

COMMENTS:

TYPICAL CONSTRUCTION OF OVERBURDEN WELL

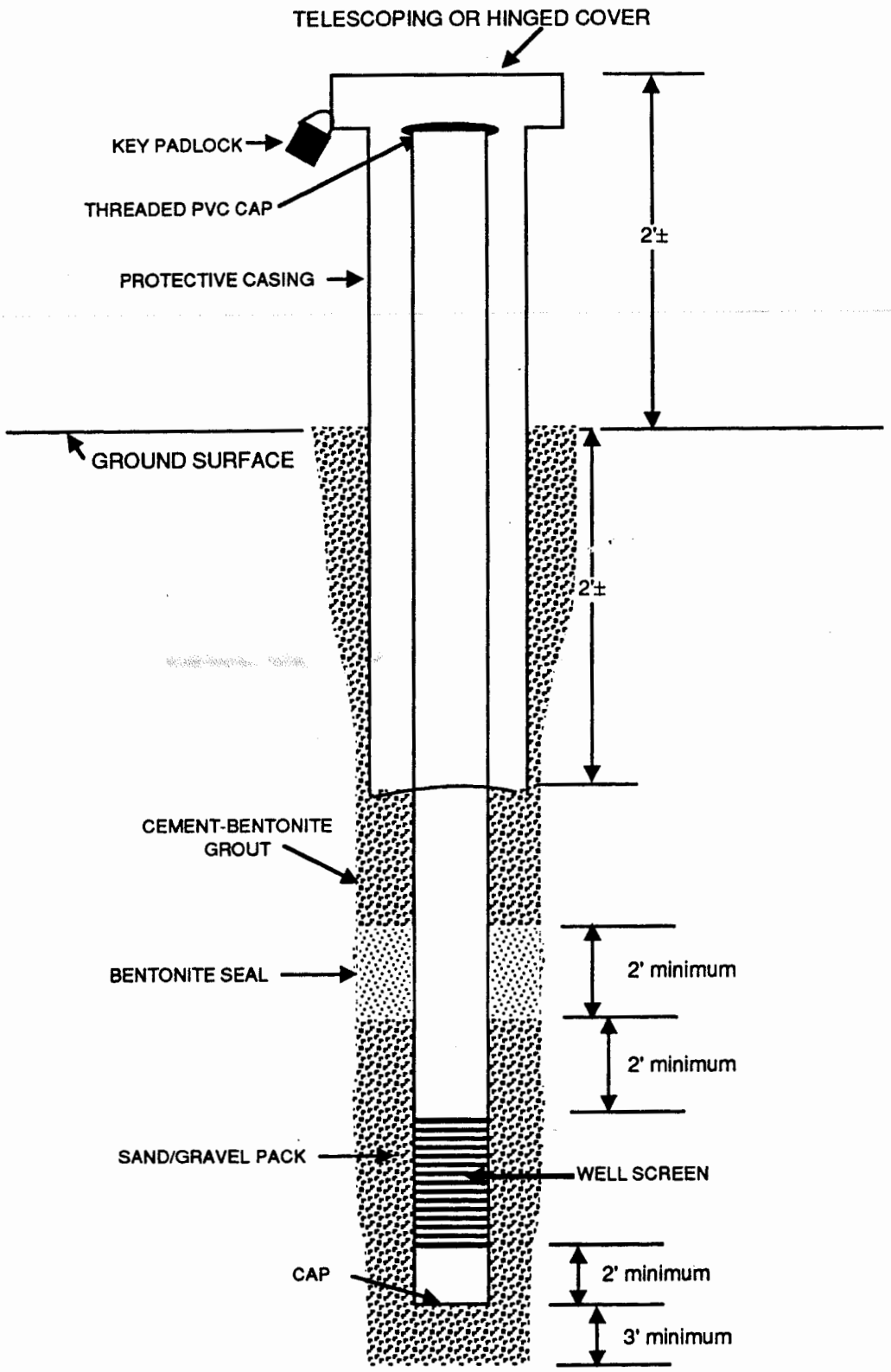

TYPICAL CONSTRUCTION OF BEDROCK WELL

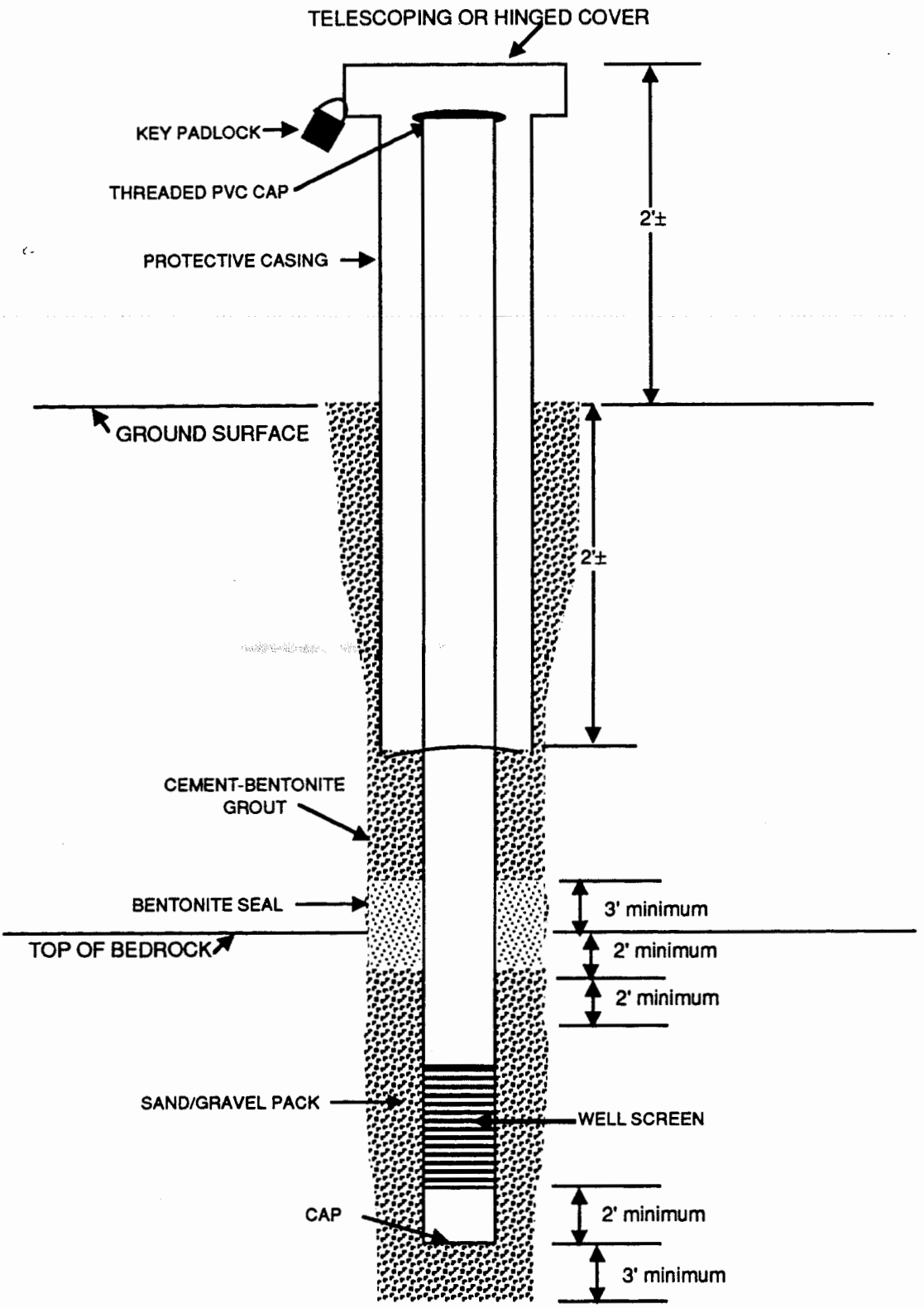

POST PLACEMENT AROUND WELL

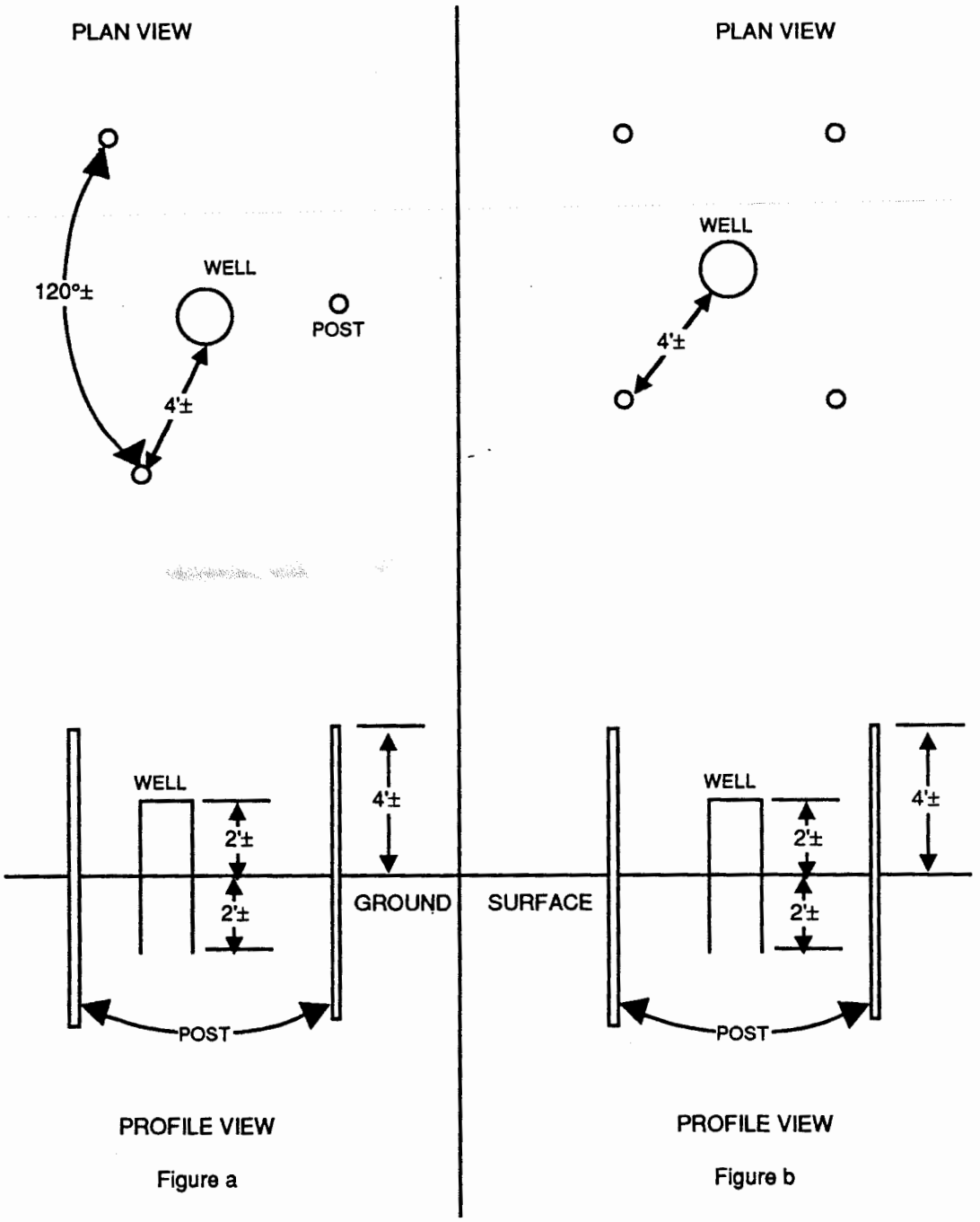

Los Alamos National Laboratory Environmental Restoration
DATA FORM COMPLETION INSTRUCTIONS

Use a ball point pen with black ink that is not water soluble (not a felt-tip pen). Make an entry in each blank. For entry blanks for which no data are obtained, enter UNK for Unknown, NA for Not Applicable, or ND for Not Done. If any procedure was not performed as prescribed, give the reason for the change or omission on the form. To change an entry, draw a single line through it, add the correct information above it, and initial the change.

DATA FORM COMPLETION

1. Technical Area (TA). Two-digit number indicating the TA in which the drilling sampling is being conducted.

2. Operable Unit (OU). Two-digit number indicating the OU in which the drilling sampling is being conducted.

3. Sample Identification. Five-digit number identifying the sample numbers in the unit area.

4. Log Date and Time. The date and time when the measurement was made, in the following formats: DD-MMM-YY (e.g., 01-JAN-99), and the 24-hour clock time (e.g., 08:37 for 8:37 a.m. and 19:12 for 7:12 p.m.).

5. Sheet Number. Number all the sheets that are used for this sample collection.

6. Weather and Other Comments. Record all other conditions pertinent to the sample collection in this section on the Daily Activity Log Form in SOP-1.01.

WELL COMPLETION INFORMATION FORM (Attachment A)

1. Owner. Identifying the owner of a well that is being installed.

2. Installer Code. Identifying the group, agency, or company responsible for installing and completing a well.

3. Formation of Completion (US/RC). US/RC designation.

4. Well Type Classification. One-character code that designates the type of well being constructed. Valid codes are listed the Well Completion Information form.

5. Well Completion Method. One-character code describing the method used to complete a well or the nature of the openings that allow water to enter a well. Valid codes are listed on the Well Completion Information form.

6. Zone of Completion. Designate the basic water-bearing zones in which a well is completed.

7. Casing Elevation (ft MSL). Top of casing elevation. Casing elevation will be filled out at completion of the field investigation.

8. Casing Length (ft). Distance from the top of casing (in feet and tenths of feet) at which the bottom of

the casing is placed.

9. Casing Diameter (in.). Diameter of casing installed in inches.

10 Seal End Depth (FTFD). Depth below ground surface (in feet and tenths of feet) at which the bottom of the seal is placed.

11. Screen Material. Describe the type of screen material.

12. Riser Material. Describe the riser material.

13. Open/Screen Depth (FTFD). Depth in feet and tenths of feet from top of casing to top of screen.

14. Open/Screen Length (ft). Total length of the screen in feet and tenths of feet.

15. Open/Screen Area (in^2/ft). Open area of screen in inches squared per foot.

16. Flow Relationship. One-character code designating the flow relationship. Valid codes are listed on the Well Completion Information form.

17. Cap Material. Two-character code describing the cap material. Valid codes are listed on the Well Completion Information form.

18. Cap Type. Describe the type of cap used in the installed well.

BOREHOLE/WELL CONSTRUCTION FIELD DATA LOG (Attachment B)

1. Rig Type. Manufacturer and model of rig.

2. Installer Code. Identifying the group, agency, or company responsible for installing and completing a well.

3. Borehole Summary

   a. Bit Type. The type of bit used.

   b. Hole Diameter (in.). Diameter of borehole in inches.

   c. End Depth (ft). Depth from the ground surface to the bottom of the borehole (in feet and tenths of feet).

   d. Fluid Type. Type of fluid used during the drilling phase of well installation.

4. Casing Summary

   a. Casing Type. One-character code describing the type of casing material used. The codes are listed below.

   b. Description. Describes the casing materials used (for example, Schedule 40 PVC) in well construction.

c. Diameter (in.). Diameter of casing in inches.

d. End Depth (ft). Depth (in feet and tenths of feet) from the top of the casing to the bottom of the casing.

5. Well Construction

a. Type Code. One-character code describing the material used for filling the annulus space in borehole.

b. Description. Describes the materials used in well construction (bentonite pellets, for example) to fill the annulus space in borehole.

c. End Depth (ft). Depth (from the ground surface) where the materials for well construction are placed in the borehole in feet and tenths of feet.

6. Construction Time Log

a. Start Date. The date construction started.

b. Start Time. The time construction started.

c. End Time. The time when construction ended.

7. Well Development. Any further developments during well construction.

Los Alamos National Laboratory **Environmental Restoration Program** Standard Operating Procedure	No: LANL-ER-SOP-05.02 Rev: 0

Well Development

	(Print Name)	(Signature)	(Date)
Preparer:	Sandra E. Wagner	Sandra Wagner	3-26-92
Quality Review by:	Micheline Devaurs	Micheline Devaurs	3/26/92
Technical Review by:	ALAN K. STOKER Sue J. Goff	Sue J. Goff	3/17/92
QPPL Approval:	Robert W Vocke	Robert W Vocke	5/17/92
PM Approval:	Karen L. Warthen	Karen L Warthen	5/18/92

Effective Date: 6-1-92

Monitor Well Development

Table of Contents

1.0 PURPOSE 2

2.0 SCOPE 2
- 2.1 Applicability 2
- 2.2 Training 2

3.0 DEFINITIONS 2

4.0 BACKGROUND AND/OR CAUTIONS 2

5.0 EQUIPMENT 4

6.0 PROCEDURE 4

7.0 REFERENCES 6

8.0 RECORDS 6

9.0 ATTACHMENTS 6

Monitor Well Development

1.0 PURPOSE

This procedure describes methods for removing foreign materials that may have been introduced into the groundwater, well annulus, or well screen during monitor well installation, and for facilitating hydraulic communication between the screened formation and the monitor well.

2.0 SCOPE

2.1 Applicability

This procedure provides instructions to the field team leader (FTL) and all field team members who are responsible for the development of new monitor wells, or the redevelopment of existing monitor wells.

2.2 Training

The FTL is responsible for monitoring the proper implementation of this procedure. The field team members must document that they have both read and understand this procedure and the procedures in Section 1.0, General Instructions.

3.0 DEFINITIONS

A. Surging: A well development technique where the surge block is alternately lifted and dropped within the borehole above or adjacent to the screen to create a strong inward and outward movement of water through the well intake.

B. Overpumping: Overpumping involves pumping the well down as low as possible and allowing it to refill.

C. Jetting: Involves lowering a pipe into the well with a series of water jets oriented perpendicular to the pipe. In the shallow alluvial wells at the Laboratory, a flexible hose also can be used for jetting.

D. Rawhiding: Water that is pumped out is allowed to run back down into the well and thus generates a two-directional flow.

E. Nephelometric Turbidity Unit (NTU).

4.0 BACKGROUND AND/OR CAUTIONS

All monitor well installation procedures create a skin, or filter cake, on the borehole wall. During monitor well development, the fine particulate matter is removed from the well or aquifer formation near the screen removing the filter cake. There are four primary

methods for developing monitor wells: overpumping, rawhiding, jetting, and surging (water or air). All of these methods are used to break away the fines (fine particulate matter) from the borehole or well walls. After the fines are broken away, they are removed by either pumping or bailing. This also settles the gravel pack. Refer to the site-specific work plan for more information on the scope of work activities for determining the method to use.

There are three primary factors that influence the development of a monitor well: 1) the type of geologic material, 2) the design and completion of the well and 3) the type of drilling technology employed in the well construction. Because of the small size of weathering products from the volcanic tuff, in some of the alluvial canyon aquifers at Los Alamos, it is virtually impossible to eliminate turbidity while developing the well.

The following discusses the different methods for well development and gives information to help choose a method.

A. Overpumping involves pumping the well down as low as possible and allowing it to refill. The increased velocities, created by refilling, remove fines. This method is usually not very effective, because the water flow is in one direction and at relatively low velocities.

B. Rawhiding is a modification of overpumping. After the water is pumped to the surface, it is either allowed to run back into the well through a foot-valveless pump or poured back down the well. Rawhiding is superior to overpumping because this method generates two-directional flow.

C. Jetting involves lowering a pipe into the well with a series of water jets on the end. The jets point horizontally. The high-pressure water pumped through the jets flushes fines from the formation and breaks the skin caused by drilling. There are two major disadvantages of the jetting method. As with the other methods, fines must occasionally be pumped from the well during development. An external water supply is needed for jetting. External water is introduced into the formation and may alter the hydrochemistry.

D. Surging involves raising and lowering a surge or swab block inside the well. The resulting motion of the water creates a washing effect and removes the borehole skin and fines from the formation. The fines must occasionally be pumped or bailed from the well to prevent sand locking of the surge block. The rubber or viton seals on the surge block are the same diameter as the inside of the well or 1/2 inch smaller if surging is conducted inside the screened interval. A 3-ft stroke is typical.

   Surging can also be implemented with high-pressure air. Air under high pressure is introduced through a high pressure air pipe. Water may be literally blown out of the top of the well, and as the air surging progresses water can be pumped out. However, air surging can introduce air into the formation (altering the hydrochemistry) and become entrained in the screens (reducing flow rates). Air must be filtered to ensure

its purity. Plastic screens can also be damaged if the air surge is too violent. A specially fabricated air swab can be used to prevent these types of damages.

Surging with a vented (pressure-relief) block (Attachment B) and rawhiding are the preferred methods for well development, although no one method is appropriate for all situations.

Regulatory guidance may be found in the RCRA Technical Enforcement Guidance Document (1986), and the EPA Handbook (EPA160014-891034).

5.0 EQUIPMENT

See Attachment A.

6.0 PROCEDURE

Obtain permission to discharge development water or coordinate efforts to purchase appropriate containment vessels for development. Assemble containers for the temporary water storage produced during well development. The containers must be structurally sound, compatible with anticipated contaminants, and field manageable.

Decontaminate all equipment before developing each well according to SOP-2.07, General Equipment Decontamination.

Perform the development as soon as practical after well installation, but no sooner than 48 hours after grouting is completed. Do not use any dispersing agents, acids, or disinfectants to enhance the development of the well. Do not add water to aid development except under the following special conditions. If problems or unusual conditions are encountered, notify the site geologist as soon as possible.

NOTE: In the installation of some monitor wells in perched alluvial aquifers at Los Alamos, partial development is desirable before emplacing the bentonite seal and cement grout because of settling that commonly occurs.

A. Assemble the necessary equipment on a plastic sheet outside of the splash range.

B. Record pertinent information and on the Well Development section of the Monitor Well Construction Field Data Log. A copy of this form and instructions for completing the form are provided in SOP-5.01, Monitor Well Construction .

C. Open the monitor well and take the air monitoring reading at the top of the casing and in the breathing zone (refer to relevant SOPs).

D. Measure and record depth-to-water and the total depth of the monitor well according to SOP-7.02, Fluid Level Measurement.

E. Develop the well until the well is free of sediment (to be determined by field team leader) and the appropriate volumes of water have been removed (refer to E.4. below). If this is not possible, consult project documents for guidance. The Hazardous and Solid Waste Amendments Permit (May, 1990) requires attempting to develop unitl the turbidity is <5 NTU. Be sure to record all changes in the Daily Activity Log, SOP-1.01. If the well is not free of sediment after the appropriate volumes of water have been removed, continue until twice the appropriate volume of water has been removed.

1. Note the initial color, clarity, and any obvious odor of the water.

2. Measure and record the initial pH, temperature, and specific conductance of the water.

3. Containerize all water produced by development in contaminated areas or areas suspected of contamination unless specified otherwise in project documents. It may be acceptable to discharge development water in the area surrounding the well; however, if water is containerized, clearly label each container with the location ID, date, and time. Labels should be placed on the lid of the container and covered with clear tape to ensure their permanence. Base the determination of an appropriate disposal method on the first round of analytical results from each well.

4. For those wells where the boring was made without the use of drilling fluid (mud or water), remove five times the standing water volume in the well (well screen and casing plus saturated annulus). Should recharge be so slow that five volumes could not be removed in 1 day or the water is not sediment free after this five-volume removal, the site geologist will select an alternate procedure for verifying that the well is properly developed.

5. Complete the appropriate data entry requirements on the Well Completion Information form to document well development. A copy of the form and instructions for completing it are in SOP-5.01, Monitor Well Installation.

F. Groundwater samples may be collected from the monitor well 30 days after well development is complete, unless specified otherwise in project documents. When samples are collected, ship them to the analytical lab as per SOP-1.03, Handling, Packaging, and Shipping of Samples.

G. Make sure all monitor well locations are properly staked and the location ID is readily visible on the protective casing.

H. Contact the analytical laboratory to ensure that samples arrived safely and instructions for sample analyses are clearly understood.

I. Ensure that all equipment is accounted for and decontaminated (refer to SOP-2.07, General Equipment Decontamination).

7.0 REFERENCES

The following procedures are directly associated with this procedure and should be reviewed before field operations:

LANL-ER-SOPs in Section 1.0, General Instruction
LANL-ER-SOP-4.01, Drilling Methods and Drill Site Management
LANL-ER-SOP-5.01, Monitor Well Installation
LANL-ER-SOP-7.02, Fluid Level Measurement

Barcelona, M. J., J. P. Gibb, J. A. Helfrich, and E. E. Garske. 1985. "Practical Guide to Groundwater Sampling." U.S. Environmental Protection Agency report EPA/600/2-85/104. U.S. Government Printing Office, Washington, D.C.

Gass, Tyler E., "Monitor Well Development." 1986. Water Well Journal 40, no. 1: 52-55.

Schalla, Ronald, and Robert W. Landick. 1986. "A New Valved and Air-Vented Plunger for Developing Small Diameter Monitor Wells," Ground Water Monitoring Review 6, no. 2: 77-80.

8.0 RECORDS

Completed Monitor Well Construction Field Data Log, SOP 5.01
Completed Daily Drilling Summary Log (SOP 4.01), which will include calibration data, deviations, and any additional comments.

9.0 ATTACHMENTS

Attachment A - Equipment and Supplies Check List
Attachment B - Surge Block Schematics

Los Alamos National Laboratory Environmental Restoration
WELL DEVELOPMENT EQUIPMENT AND SUPPLIES CHECK LIST

_____ Water level measurement probe

_____ Electrical conductivity meter

_____ Distilled water

_____ Stopwatch

_____ Plastic sheet

_____ Boiler, Pump, Surgeblock or other method-specific equipment

_____ SOP 5.01, Attachment B

_____ SOP 4.01, Attachment A

Los Alamos National Laboratory Environmental Restoration
SURGE BLOCK SCHEMATICS

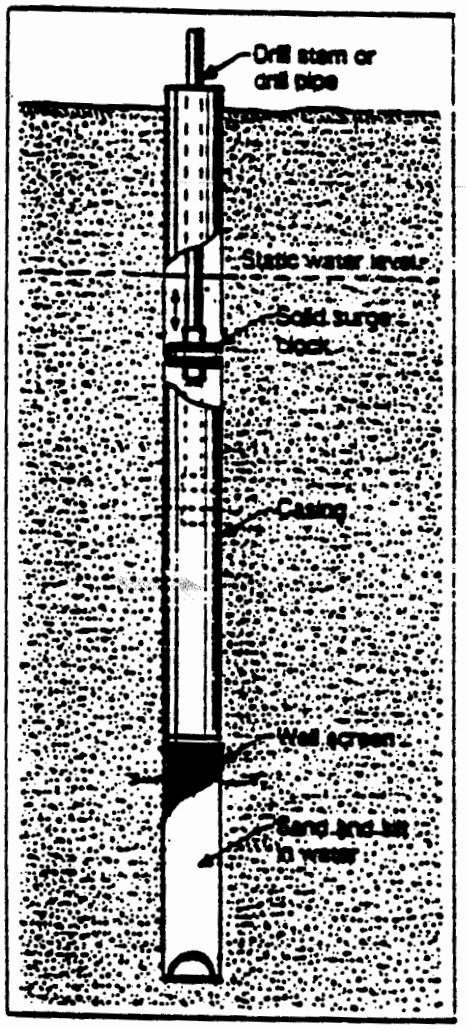

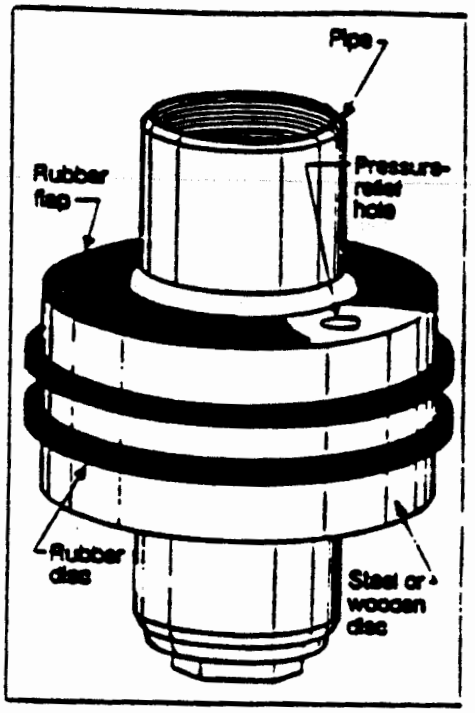

Los Alamos National Laboratory **Environmental Restoration Program** Standard Operating Procedure	No: LANL-ER-SOP-06.01 Rev: 0

Purging of Wells for Representative Sampling of Ground Water

	(Print Name)	(Signature)	(Date)
Preparer:	Sandra E. Wagner	Sandra E. Wagner	10-16-91
Quality Review by:	Bruce Gallaher	Bruce Gallaher	9/30/91
Technical Review by:	ALAN K. STOKER	[illegible]	10/2/91
QPPL Approval:	Larry Maassen	[illegible]	[illegible]
PM Approval:	Robert W Vocke	Robert W Vocke	10/14/91

Effective Date: 3-16-92

SEPT 1994

9-12-94

General

Environmental Restoration Standard Operating Procedures

Volume II

A Department of Energy
environmental clean-up program

LIBRARY COPY

97 SEP 16 AM 11:4

LIBRARY COPY

CONTROLLED COPY #42

Los Alamos
NATIONAL LABORATORY

TR/TO

LANL-ENVIRONMENTAL RESTORATION PROGRAM
STANDARD OPERATING PROCEDURES MANUAL

SUPERSEDED DOCUMENTS

SUPERSEDED DOCUMENT NO.	DOCUMENT TITLE & EFFECTIVE DATE	DATE SUPERSEDED	SUPERSEDED BY & EFFECTIVE DATE
LANL-ER-SOP-1.04, R0	Sample Control and Field Documentation 03/16/92	January 5, 1993	LANL-ER-SOP-1.04,R1 Sample Control and Field Documentation
LANL-ER-SOP-01.03,R0	Handling, Packaging and Shipping of Samples 03/16/92	May 5, 1994	LANL-ER-SOP-01.03,R1 Handling, Packaging and Shipping of Samples
LANL-ER-SOP-01.04,R1	Sample Control and Field Documentation 01/05/93	May 5, 1994	LANL-ER-SOP-01.04,R2 Sample Control and Field Documentation
LANL-ER-SOP-3.01, R0	Land Surveying Procedures 05/05/94	September 6, 1994	LANL-ER-SOP-3.01,R1 Land Surveying procedures,
LANL-ER-SOP-3.02,R0	General Surface Geophysics 06/25/94	September 17, 1993	LANL-ER-SOP-3.02,R1 General Surface Geophysics
LANL-ER-SOP-10.04,R0	MCA 465/Fidler Instrument System 09/17/94	May 5, 1994	LANL-ER-SOP-10.04,R1 Fidler Instrument System
LANL-ER-SOP-12.01,R0	Field Logging, Handling and Documentation of Borehole Samples 06/25/94	May 25, 1994	LANL-ER-SOP-12.01,R1 Field Logging, Handling and Documentation of Borehole Samples
LANL-ER-SOP-12.02,R0	Transportation, Receipt, and Admittance of Borehole Samples for The Sample Management Facility 11/17/93	May 25, 1994	LANL-ER-SOP-12.02,R1 Transportation, Receipt, and Admittance of Borehole Sample for The Sample Management Facility

LANL-ER-SOP-1.06,R0	Management of RFI-Generated Waste 03/16/92	September 6, 1994	**LANL-ER-AP-05.3,R0** Management of Environmental Restoration Program Waste

Los Alamos
Los Alamos National Laboratory
Los Alamos, New Mexico 87545

DATE: November 17, 1993
IN REPLY REFER TO: EM-13:93-V877
MAIL STOP: M992
TELEPHONE: (505) 667-0808

Ms. Barbara Driscoll
US Environmental Protection Agency
RCRA Permits Branch, Region 6
1445 Ross Ave., Suite 1200
Dallas, TX 75202-2733

Dear Barbara:

SUBJECT: CONTROLLED DISTRIBUTION OF ENVIRONMENTAL RESTORATION (ER) PROGRAM STANDARD OPERATING PROCEDURES (SOPs)

Enclosed are documents for insertion in your **controlled** copy of the Environmental Restoration (ER) Standard Operating Procedures (SOPs) manual.

The documents for this distribution are:

1) Table of Contents, Instructions & the Distribution List - all dated November 17, 1993 for **(Volume I and II)**
2) ER-SOP-03.12 TAB
3) LANL-ER-SOP-03.12,R0 - Field and Laboratory Notebook Documentation for Environmental Restoration Earth Science Studies
4) ER-SOP-12.02 TAB
5) LANL-ER-SOP-12.02,R0 - Transportation, Receipt, and Admittance of Borehole Samples for the Sample Management Facility

Please follow the instructions on the Receipt Acknowledgment form to complete all updates. Sign and Return the Receipt Acknowledgment form by December 1, 1993.

Contact Trish Rodriguez, ER Controlled Document Custodian at 665-6498, if you have any questions regarding this update.

Sincerely,

Robert W. Vocke
ER Program Manager

RV/tr

Enc. a/s

November 17, 1993

Copy w/o enc.
L. Soholt, EM-13, MS M773
P. Aamodt, EM-13, MS M992
RPF, MS M707
CRM-4, MS A150

Los Alamos

Los Alamos National Laboratory
Los Alamos, New Mexico 87545

DATE: September 16, 1993
IN REPLY REFER TO: EM-13:93-V782
MAIL STOP: M992
TELEPHONE: 505-667-0808

Ms. Barbara Driscoll
US Environmental Protection Agency
RCRA Permits Branch, Region 6
1445 Ross Ave., Suite 1200
Dallas, TX 75202-2733

Dear Barbara:

SUBJECT: DISTRIBUTION OF ENVIRONMENTAL RESTORATION (ER) STANDARD OPERATING PROCEDURES (SOPs)

Enclosed are documents for insertion in your controlled copy of the Environmental Restoration (ER) Standard Operating Procedures (SOPs) manual.

The documents for this distribution are:

a) Table of Contents, Instructions, Distribution List and the List of Superseded Documents - all dated 9/17/93 (Volume I and II)
b) LANL-ER-SOP-03.02, R1 - General Surface Geophysics
c) ER-SOP-06.29 TAB
d) LANL-ER-SOP-06.29, R0 - Single-Stage Sampling for Surface Water Run-Off
e) ER-SOP-10.04 TAB
f) LANL-ER-SOP-10.04, R0 - MCA-465/Fidler Instrument System

Please follow the instructions on the Receipt Acknowledgment form to complete all updates. Sign and **return** the Receipt Acknowledgment form by **October 1, 1993**.

Contact Trish Rodriguez, ER Controlled Document Custodian at (505) 665-6498, if you have any questions regarding this update.

RV/tr

Enc. a/s

September 16, 1993

Sincerely,

Robert W. Vocke
ER Program Manager

Copy w/o enc.
T. Gunderson, EM-DO, MS J591
L. Soholt, EM-13, MS M773
P. Aamodt, EM-13, MS M992
CRM-4, MS A150
RPF, MS M707

Los Alamos

Los Alamos National Laboratory
Los Alamos, New Mexico 87545

DATE: June 30, 1993
IN REPLY REFER TO: EM-13:93-613
MAIL STOP: M992
TELEPHONE: (505) 667-0808

Ms. Barbara Driscoll
US Environmental Protection Agency
RCRA Permits Branch, Region 6
1445 Ross Ave., Suite 1200
Dallas, TX 75202-2733

Dear Barbara:

SUBJECT: CONTROLLED DISTRIBUTION OF ENVIRONMENTAL RESTORATION (ER) STANDARD OPERATING PROCEDURES (SOPs) AND SOP TABS

Enclosed are controlled documents for insertion in your controlled copy of the Environmental Restoration Standard Operating Procedures manual.

The SOPs for this distribution are:

Volume I	
LANL-ER-SOP-03.08, R0	General Surface Geophysics
LANL-ER-SOP-04.04, R0	General Borehole Logging
LANL-ER-SOP-06.25, R0	Total Suspended Particulate Air Sampling
Volume II	
LANL-ER-SOP-12.01, R0	Field Logging, Handling, and Documentation of Borehole Materials

For your convenience, the SOPs have already been placed behind their corresponding tabs. SOP 06.25, R0 (and SOP-06.26, R0 from the 5/19/93 distribution) temporarily have a white "generic" tab. I will distribute the proper green tab as soon as I receive the remaining tabs from printing.

Please follow the instructions on the receipt acknowledgment form to complete all updates. Sign the form and return in the blue document control envelope by **July 15, 1993**.

If you have any questions regarding this distribution, please contact Trish Rodriguez at (505) 665-6498.

Sincerely,

Robert W. Vocke

Robert W. Vocke
ER Program Manager

An Equal Opportunity Employer/Operated by University of California

June 30, 1993

RV/tr

Enc.: As stated

Copy w/o enc.:
T. Gunderson, EM-DO, MS J591
L. Soholt, EM-13, MS M992
P. Aamodt, EM-13, MS M992
CRM-4, MS A150
RPF, MS M707

Los Alamos

Los Alamos National Laboratory
Los Alamos, New Mexico 87545

DATE: May 26, 1993
IN REPLY REFER TO: EM-13:93-495
MAIL STOP: M992
TELEPHONE: (505) 667-0808

Ms. Barbara Driscoll
US Environmental Protection Agency
RCRA Permits Branch, Region 6
1445 Ross Ave., Suite 1200
Dallas, TX 75202-2733

Dear Barbara:

SUBJECT: CONTROLLED DISTRIBUTION OF ENVIRONMENTAL RESTORATION STANDARD OPERATING PROCEDURES (SOPs) AND SOP TABS

Enclosed are controlled documents for insertion in your copy of the Environmental Restoration Standard Operating Procedures manual.

The SOPs for this distribution are:

LANL-ER-SOP-03.08, R0	Geomorphic Characterization
LANL-ER-SOP-03.10,R0	Trenching and Logging
LANL-ER-SOP-06.23,R0	Measurement of Gamma-Ray Fields Using a Sodium Iodide Detector
LANL-ER-SOP-06.24,R0	Sample Collection From Split-Spoon Samplers and Shelby Tube Samplers
LANL-ER-SOP-06.26,R0	Core Barrel Sampling for Subsurface Earth Materials

The SOPs, table of contents instructions and the master distribution list for the distribution have already been collated and placed behind its corresponding tab. Please access SOP manuals Volume I and II, replace the tabs (discard the white tabs) and place the current distribution documents in your manuals.

Please sign and return the receipt acknowledgment form by June 11, 1993.

If you have any questions regarding this distribution, please contact Trish Rodriguez at (505) 665-6498.

May 27, 1993

Sincerely,

for Robert Vocke
ER Program Manager

RV/tr

Enc.: As stated

Copy
T. Gunderson, EM-DO, MS J591
L. Soholt, EM-13, MS M992
P. Aamodt, EM-13, MS M992
CRM-4, MS A150
RPF, MS M707

Los Alamos

Los Alamos National Laboratory
Los Alamos, New Mexico 87545

DATE: August 16, 1993
IN REPLY REFER TO: EM-13:93-V693
MAIL STOP: M992
TELEPHONE: (505) 667-0808

Ms. Barbara Driscoll
US Environmental Protection Agency
RCRA Permits Branch, Region 6
1445 Ross Ave., Suite 1200
Dallas, TX 75202-2733

Dear Barbara:

SUBJECT: DISTRIBUTION OF ENVIRONMENTAL RESTORATION (ER) STANDARD OPERATING PROCEDURES (SOPs) AND SOP TABS

Enclosed are documents for insertion in your controlled copy of the Environmental Restoration (ER) Standard Operating Procedures (SOPs) manual.

Please follow the instructions on the Receipt Acknowledgment form to complete all updates.

The documents for this distribution are:

a) Table of Contents, General Instructions & Master Distribution List dated 8/10/93 (Volumes I and II)
b) ER-SOP-06.25 TAB
c) ER-SOP-06.26 TAB
d) ER-SOP-14.01 TAB
e) ER-SOP-14.01, R0 - Berthold Low Alpha and Beta Activity Counter Calibration, Quality Control, Detection Limit, and Use

Complete all updates, sign and return the receipt acknowledgment form by August 25, 1993.

Please contact Trish Rodriguez, ER Controlled Document Custodian at (505) 665-6498, if you have any questions regarding this distribution.

Sincerely,

Robert W. Vocke
ER Program Manager

August 16, 1993

RV/tr

enc. a/s

Copy w/o enc.
T. Gunderson, EM-DO, MS J591
L. Soholt, EM-13, MS M992
P. Aamodt, EM-13, MS M99
CRM-4, MS A150
RPF, MS M707

Los Alamos National Laboratory
Environmental Restoration Program

STANDARD OPERATING PROCEDURES

CONTENTS - VOLUME II

General Instructions	dated June 13, 1994
Master Distribution List	dated June 13, 1994
List of Superseded Documents	dated May 25, 1994

Procedure Numbers	Title
7.0	**SUBSURFACE HYDROGEOLOGICAL SITE CHARACTERIZATION**
LANL-ER-SOP-07.01,R0	Pressure Transducers
LANL-ER-SOP-07.02,R0	Fluid Level Measurements
LANL-ER-SOP-07.03,R0	Well Slug Tests
LANL-ER-SOP-07.04,R0	Aquifer Pumping Tests
9.0	**GEOCHEMISTRY**
LANL-ER-SOP-09.01,R0	Thin Section Preparation
LANL-ER-SOP-09.02,R0	Operating the Microprobe
LANL-ER-SOP-09.03,R0	Operation of the Siemens X-Ray Diffractometer
LANL-ER-SOP-09.04,R0	Calibration and Alignment of the Siemens Diffractometers
LANL-ER-SOP-09.05,R0	Clay Mineral Separation for X-Ray Diffraction Analysis
LANL-ER-SOP-09.06,R0	Zeolite Purification and Separation
LANL-ER-SOP-09.07,R0	Operating Instructions for ISI ModelDS-130 Scanning Electron Microscope and Tracor Northern Series II X-Ray Analyzer
LANL-ER-SOP-09.09.R0	Certification of Standards for Electron Microanalysis

Procedure Numbers	Title
10.0	**FIELD SCREENING TECHNIQUES**
LANL-ER-SOP-10.01,R0	Screening of PCB's in Soil
LANL-ER-SOP-10.04,R1	Fidler Instrument System
LANL-ER-SOP-10.05,R0	Field Analysis of Total Hydrocarbons Using The Hanby Method
11.0	**GEOTECHNICAL ANALYSIS**
LANL-ER-SOP-11.01,R0	Measurement of Bulk Density, Dry Density, Water Content and Porosity in Soil
LANL-ER-SOP-11.02,R0	Particle Size Distribution of Soil/Rock Samples
LANL-ER-SOP-11.03,R0	Permeability of Granular Soils
LANL-ER-SOP-11.04,R0	Soil and Core pH
LANL-ER-SOP-11.05,R0	Total Organic Carbon
LANL-ER-SOP-11.06,R0	Cation-Exchange Capacity
12.0	**CURATORIAL MANAGEMENT ACTIVITIES**
LANL-ER-SOP-12.01,R0	Field Logging, Handling and Documentation of Borehole Materials
LANL-ER-SOP-12.02,R0	Transportation, Receipt, and Admittance of Borehole Samples for the Sample Management Facility
LANL-ER-SOP-12.03,R0	Acceptance of Non-Borehole Samples by the Sample by the Sample Management Facility
LANL-ER-SOP-12.04,R0	Physical Processing and Storage of Borehole Samples at the Sample Management Facility
LANL-ER-SOP-12.05,R0	Examination of Samples at the Sample Management Facility
14.0	**GROSS MEASUREMENTS OF RADIOACTIVITY IN SOILS**
LANL-ER-SOP-14.01,R0	Berthold Low Alpha and Beta Activity Counter Calibration, Quality Control, Detection Limit, and Use

LOS ALAMOS NATIONAL LABORATORY
ENVIRONMENTAL RESTORATION PROGRAM

STANDARD OPERATING PROCEDURES

GENERAL INSTRUCTIONS

1. Please read and familiarize yourself with the Purpose and Scope of each section and the Field Activity Flow Chart (Attachment A), located in LANL-ER-SOP-1.01,R0.

2. Ensure that the personnel you supervise have access to your manual or ensure that they are issued "controlled working copies" of appropriate procedures.

3. Follow the directions in the administrative procedure LANL-ER-AP-01.4, R0, Distribution of Controlled Documents Prepared for the Environmental Restoration Program, to request controlled working copies of procedures for your employees.

4. Follow the guidelines in the administrative procedure LANL-ER-AP-01.5,R0, Revision or Interim Change of Environmental Program Controlled Documents, to initiate interim changes or revisions to procedures.

5. Request unmarked copies of the Chain of Custody/Request for Analysis form located in LANL-ER-SOP-01.4, R1 by contacting John Miglio at CST-9, MS K484, 665-8742.

6. Request unmarked copies of all other SOP forms by contacting the Controlled Document Coordinator (Renee Archuleta) at EM/ER, MS M707, 665-6498.

7. **PLEASE return your manual** to the Document Control Coordinator for EM/ER, if you leave or are no longer conducting work for the ER Program.

8. Contact the Controlled Document Coordinator **before** you transfer your controlled manual to another person.

Los Alamos National Laboratory
Environmental Restoration Program

STANDARD OPERATING PROCEDURES

MASTER DISTRIBUTION LIST

Controlled Manual No.	Recipient Name	Group/Location
1.	Larry Maassen	EM/ER, MS M992
2.	Returned	EM/ER, MS M992
3.	Jim Aldrich	EES-1, MS D462
4.	Roy Michelotti	CLS-DO, MS E525
5.	Ron Conrad	QESHA-8, MS K490
6.	Inactive	
7.	Dorothy Hoard	CLS-1, MS E525
8.	Gary Eller	CST-10, MS J534
9.	Tracy Glatzmaier	EM/ER, MS M992
10.	Gene Gould	ESA-4, MS G787
11.	Cheryl Rofer	EES-1, MS D462
12.	Jim Noel	EM/ER, MS J591
13.	Robert Gilkeson	ERM, MS M327
14.	Pat Longmire	CST-10, MS J534
15.	Brad Martin	CLS-DO, MS J563
16.	Al Ogard	INC-7, MS J514
17.	Allyn Pratt	EES-13, MS J521
18.	Larry Creamer	M7, MS P950
19.	Inactive	
20.	Sue Goff	EES-4, MS H865
21.	Marja Shaner	EM/ER, MS M773
22.	John Miglio	CST-9 MS K484
23.	**Returned**	
24.	James M. Ray	EM/ER (RPF), MS M707
25.	Bruce Gallaher	QESHA-8, MS K490
26.	Mike Madonia	Weston, MS M992
27.	Stacy Ulrich	ERM, MS M327
28.	Robin Roybal	EM/ER, MS M992
29.	Phil Fresquez	QESHA-8, MS K490
30.	Linda Ettinger	EES-5, MS D452
31.	Andrew Crowder	ERM, MS M327
32.	Carl Newton	EES-3, MS C335
33.	Garry Allen	CST-6, MS E525
34.	Helen Gram	ICF-Kaiser, MS M703

Controlled Manual No.	Recipient Name	Group/Location
35.	Elizabeth Kelly c/o L. Nonno	EM/ER, MS M773
36.	Nancy Marusak	EES-5, MS F665
37.	Susan Alexander	HS-5, MS K494
38.	Kathleen Armstrong	EM/ER, MS M992
39.	Katherine Campbell	A-1, MS F600
40.	Charlie Wilson	ERM, MS M327
41.	Ted Taylor	DOE-LAAO, MS A316
42.	Barbara Driscoll	US EPA, Dallas, TX
43.	Greg Bayhurst	CST-10, MS J514
44.	Dave Bradbury	EM/ER, MS M992
45.	Darril Bultman	ESA-4, MS G787
46.	Bart VandenPlas	ERM, MS M327
47.	A. Edward Norris	EM/ER, MS M992
48.	Rebecca Brown	ERM, MS M327
49.	Tami Wiggins	ERM, MS M327
50.	Ted Taylor	DOE-LAAO, MS A316
51.	Dennis Armstrong	QESHA-8, MS K490
52.	Roy Bohn	EM/ER, MS M992
53.	Jan Novak	EES-1, MS D[illegible]62
54.	Dale Conover	[illegible]orrison Knu[illegible]en Corp.
55.	Steve Stellavato	[illegible]ES-13, MS [illegible]1
56.	Donald Krier	EES-1, MS J[illegible]
57.	Larry Souza	EM/ER, MS M992
58.	Sandy Roybal	EM/ER, MS M992
59.	Douglas Pippin	ESA-4, MS G787
60.	John Williams	ERM, MS M[illegible]27
61.	Richard Cordi	EES-13, MS [illegible]21
62.	Benny Martinez	CST-10, MS [illegible]14
63.	Kevin Walter	ERM, MS M[illegible]
64.	Max Maes	ESH-8, MS [illegible]98
65.	Ann White	ERM, MS M327
66.	Scott Cohen	ESH-8, MS K490
67.	Jeffrey Tucker	IT Corp.
68.	Jayne Bradley	ERM, MS M327
69.	Derek Faulk	ERM, MS M327
70	Lily Reese	ESH-14, MS C307
71	Carol White	EES-1; MS D462
72	Corinne P. Wilson	ICF KAISER; MS M703
73	Robert Gonzales	EM/ER; MS M768
74	Lynn Kidman	ICF KAISER, MS M703
75	Patricia Tillery	ICF KAISER, MS M703
76	Jennifer a. Harris	ERM, MS M327

Controlled Manual No.	Recipient Name	Group/Location
77	Dennis L. Newell	ERM, MS M327
78	Rebecca Garnett	ERM, MS M327
79	Barbara Hoditschek	NMED
80	Dan Michaels	Neptune & Co.
81	Laural Shastri	ERM, MS M327
82	Danny Katzman	ERM, MS M327
83	Cleoves B. Martinez	LATA, MS M321
84	David Hickens	EM/ER, MS M992
85	Viki A. Fry	ERM Golder, MS M327

Transferred Manuals from Original Distribution 3/16/92

Manual No.	To	From
13	Robert Gilkeson	John Krueger
4	Roy Michelotti	Bob Anderson
19	John Krueger	Sandy Wagner
12	Jim Noel	Sharad Kelkar
18	George Guthrie	Cheryl Rofer
11	Cheryl Rofer	Tom Hakonson
21	Marja Shaner	Karen Warthen
18	Larry Creamer	George Guthrie
38	Kathleen Armstrong	Jim Haynes
7	Dorothy Hoard	Keith Dowler
30	Linda Ettinger	Greg Cole
46	Bart VandenPlas	Larry Dziuk
56	Don Krier	Donald Neeper
45	Darril Bultman	Robert Gillis
26	Mike Madonia	J. Smith
27	Stacy Ulrich	Alan Macgregor
64	Max Maes	Michael Burkheimer
23	**Pending Transfer**	Robert Vocke
02		Paul Aamodt

Los Alamos National Laboratory **Environmental Restoration Program** Standard Operating Procedure	No: LANL-ER-SOP-07.01 Rev: 0

Pressure Transducers

	(Print Name)	(Signature)	(Date)
Preparer:	Sandra E. Wagner	Sandra E. Wagner	10-16-91
Quality Review by:	Bruce Gallaher	Bruce Gallaher	9/30/91
Technical Review by:	Bruce Gallaher	Bruce Gallaher	9/30/91
QPPL Approval:	Larry Maassen	Larry Maassen	10-10-91
PM Approval:	Robert W Vocke	Robert W Vocke	10/14/91

Effective Date: 3-16-92

PRESSURE TRANSDUCERS

1.0 PURPOSE

The purpose of this procedure is to describe the methods for conducting office and field checks of pressure transducers for use in the Environmental Restoration (ER) program.

2.0 SCOPE

2.1 Applicability

This procedure is applicable to all personnel who are operating pressure transducers for the ER Program.

2.2 Training

The field team leader should ensure that field team members understand the use of pressure transducers and the specific data loggers with which they are to be used. The field team members must document that they have read and understand this procedure, as well as the procedures in Section 1.0, General Instructions.

3.0 DEFINITIONS

A. Hydrostatic pressure: The pressure exerted by a column of fluid.

4.0 BACKGROUND AND/OR CAUTIONS

A pressure transducer measures pressures over a specific range of submergence. Outside this range, measurements will not be accurate. If the transducer is over-pressured, permanent damage can occur; therefore, the transducer probe must <u>never</u> be submerged beyond its rated depth. Pressure transducers are designed to be used with automatic data logging instruments and send a current to the data logger. The current is proportional to the pressure and can be converted to meaningful units by the data logger. The pressure measured is the total pressure, which includes the hydrostatic pressure of the fluid column above the transducer and the atmospheric pressure at the fluid surface.

Most pressure transducers are self-compensating for changes in atmospheric pressure via a vent to the atmosphere. The vent port is normally located where the cable attaches to the data logger, thus, where extension cables are being used, the operator should ensure that the connecter is not submerged. Also, there should be <u>no</u> sharp bends in the transducer cable.

There are a number of pressure transducers on the market and the operator must consult the manufacturer's specifications concerning maintainence and chemical compatibility with contaminants which are expected to be present in the medium to be monitored (usually water).

Under normal conditions it should not be necessary to disassemble the pressure transducer. However, if it does become necessary, follow the manufacturer's instructions carefully and check the accuracy of the reassembled probe as discussed in Section 6.0.

NOTE: Many data loggers contain lithium batteries, which are classified by the Department of Transportation (DOT) as hazardous material. Contact the DOT and all other authorities (i.e., Federal Express, Airport, etc.) involved with equipment shipment for instructions.

Site workers preparing for field operations should read and understand the procedures outlined in LANL-ER-SOPs, Section 2.0, Health and Safety in the Field. In addition, site workers should refer to site-specific Operable Unit Health and Safety plans for the particular health and safety equipment to be used.

5.0 EQUIPMENT

Equipment to implement this procedure are listed in Attachment A.

6.0 PROCEDURE

Be sure to record the information on the manufacturer's data log sheet. Begin by identifying the serial number and model number of the instrument. Use the Daily Activity Log (refer to SOP-01.04).

A. Assemble the equipment and supplies listed in Attachment A. Consult manufacturers instructions to ensure the proper operation of all equipment.

B. Ensure the proper operation of the electronic data logger and pressure transducer. Review guidelines in the operator's manual for the electronic data logger. Consult the manufacturer's instructions as to the setting of transducer depth, the reference elevation, scale factor, and test number. Be sure that the data logger or its battery pack is fully charged. Using a 3- to 4-ft column of water (for example, capped PVC casing), test the response of the electronic data logger and pressure transducer.

C. Conduct a test for the proper depth response and a test for the drift of readings in this column, as discussed below. These tests constitute a calibration check for the data logging instrumentation. Perform this check daily where possible.

   Depth Response Test

   1. Mark the length of the transducer cable at measured intervals appropriate for the column of water. Using a 4-ft column of water, for example, mark the cable with tape at 1-ft intervals (for a 3-ft length), measuring from the transducer end.

2. Connect the cable to the data logger and put the data logger into display mode so that changes in hydrostatic pressure can be monitored.

3. Fill a capped PVC well screen with water and lower the transducer probe into the filled casing to the first mark and obtain a reading. Repeat until the last mark has been reached. Start the logging sequence.

4. Wait one minute and raise the transducer a measured length. Wait one more minute.

5. Continue raising the transducer cable by the measured increments and logging the results for one minute until all segments have been measured.

6. Check the depth recorded on the data logger against the actual depths. If the difference is greater than 5% of the measured depth, return the transducer to the manufacturer for calibration.

Drift Test

1. Lower the transducer into the water column and tape to the edge of the column.

2. Connect the transducer cable to the electronic data logger and begin a 15-min logging sequence.

3. Check the results for noticeable drift of the depth measurement.

4. Notify the manufacturer if an unacceptable noticeable drift is occurring.

D. Locate the monitoring wells where the pressure transducer will be calibrated.

E. Decontaminate the transducer and cable as specified in SOP-02.07, General Equipment Decontamination.

F. Take an initial water level measurement from the well to be monitored using a tape or water level sounder according to SOP-07.02, Fluid Level Measurement. Record all pertinent information on the Groundwater Elevation form found in SOP-07.02.

G. Before beginning the monitoring, set up the data logger as outlined in the manufacturer's manual. The type of information may vary, depending on the model used. When using different models, consult the operator's manual for the proper data entry sequence to be used. Be sure that the field operator understands what computations must be made and how to save the data to prevent accidental data loss.

H. Cover sharp edges of the well casing with duct tape to protect the transducer cables. Lower the pressure transducer into place, monitoring the hydrostatic pressure during installation. Duct tape transducer into place prior to commencement of test.

I. Check the depth of the transducer using the display mode of the data logger and test transducer response by raising it about a foot.

J. Commence the water level measuring task to be performed (for example, slug test or pumping test).

K. Ensure that all equipment is accounted for and decontaminated (SOP-02.07). If decontamination is required, dispose of all decon materials according to SOP-01.06, Management of RFI-Generated Waste.

L. Print out data prior to the shutdown of the electronic data logger (see operator's manual).

7.0 REFERENCES

The following procedures are directly associated with this procedure and should be reviewed before field operations:

LANL-ER-SOPs in Section 1.0, General Instructions.
LANL-ER-SOPs in Section 2.0, Health and Safety in the Field.
LANL-ER-SOP-07.02, Fluid Level Measurement.
LANL-ER-SOP-07.03, Well Slug Tests.
LANL-ER-SOP-07.04, Aquifer Pumping Tests.

Enviro-Labs, Inc. 1986. "Operation manual: El-200 Groundwater Monitoring System with Model EL-120-MCP Data Logger," April 1986. Milford, NH.

In-Situ, Inc. 1984. "Owner's Manual: Hydrologic Analysis System, Model SE200," April 1984. Laramie, WY.

8.0 RECORDS

A. Completed Groundwater Elevation form.

B. Completed Daily Activity Log which will include calibration data, any calculations, decontamination procedures, any deviations, data from the electronic data logger, and additional comments.

9.0 ATTACHMENTS

A. Equipment and supplies checklist

EQUIPMENT AND SUPPLIES CHECKLIST FOR PRESSURE TRANSDUCERS

_____ Electronic data logger and printer or level head

_____ Pressure transducer and cable

_____ Water level sounder

_____ Tape measure graduated in 0.01 ft

_____ Capped PVC casing

_____ Duct tape

_____ Clean water

_____ Decontamination equipment

_____ Specifications (copies) for pressure transducer being used and manual for data logger

_____ H&S protective clothing

_____ Waterproof pen

_____ Groundwater Elevation forms

_____ Daily Activity Logs

Los Alamos National Laboratory **Environmental Restoration Program** Standard Operating Procedure	No: LANL-ER-SOP-07.02 Rev: 0

Fluid Level Measurements

	(Print Name)	(Signature)	(Date)
Preparer:	Sandra E. Wagner	Sandra E. Wagner	10-16-91
Quality Review by:	Bruce Gallaher	Bruce Gallaher	9/30/91
Technical Review by:	ALAN STORER	[illegible]	10/2/91
QPPL Approval:	Larry Maassen	Larry Maassen	10/10/91
PM Approval:	Robert W Vocke	Robert W Vocke	10/14/91

Effective Date: 3-16-92

FLUID LEVEL MEASUREMENT

1.0 PURPOSE

The purpose of this procedure is to describe the method for determining the depth-to-fluid and groundwater elevations in an open borehole, cased borehole, monitor well, or piezometer for the Environmental Restoration (ER) program.

2.0 SCOPE

2.1 Applicability

This procedure is applicable to all field team members who are operating water level instruments for the ER program.

2.2 Training

The field team leader is responsible for monitoring the proper implementation of this procedure. The field team members should be familiar with the objectives and be trained in the procedures of fluid level measurement and must certify that they have read and understand this procedure and the procedure in Section 1.0, General Instructions.

3.0 DEFINITIONS

Piezometer: An observation well used to measure the potentiometric surface of groundwater in an aquifer.

4.0 BACKGROUND AND/OR CAUTIONS

Water level measurements are generally used to construct potentiometric surface maps. The documentation of water level measurements, air quality for the health and safety of field personnel, and equipment calibration will be performed as described in the associated SOPs. Refer to the site-specific work plan for more information on the scope of work activities, equipment, and frequency of measurements for this SOP.

Since water level measurements from boreholes, piezometers, or monitor wells are used to construct potentiometric surface maps, ideally, water level measurements should be collected within a 24-hr period. Under the following conditions, all measurements must be taken within a shorter interval:

- A range of observed changes between wells that is too large to be indicative of natural groundwater gradient
- Drastic atmospheric pressure changes

- Aquifers affected by river stage, impoundments, or unlined ditches
- Aquifers stressed by intermittent pumping of production wells
- Aquifers being actively recharged because of precipitation event.

The device used to measure water levels should be adequate to attain an accuracy of 0.01 ft. Generally acceptable devices are listed below:

- Steel tape
- An electric sounder
- A petroleum product probe
- A transducer.

Additionally, the following devices can be used with accuracy of about 1.0 ft.

- A reflection sounder
- An airline.

Allow water levels in piezometers and monitor wells to stabilize for a minimum of 24 hr after well construction and development before measurements are taken. Recovery may take longer in wells completed in tight formations.

Site workers preparing for field operations should read and understand the procedures outlined in LANL-ER-SOPs, Section 2.0, Health and Safety in the Field. In addition, site workers should refer to site-specific Operable Unit Health and Safety plans for the particular health and safety equipment to be used.

5.0 EQUIPMENT

Equipment to implement this procedure are listed in Attachment A.

6.0 PROCEDURE

A. Locate monitor wells to be measured and the appropriate decontamination area. Check decontamination zones and barricades to public access.

B. Decontaminate all sampling equipment before taking the first measurement and between measurement intervals (SOP-02.07, General Equipment Decontamination).

C. When taking a number of water level measurements, it is preferable to start at those wells that are the least contaminated and proceed to those wells that are the most contaminated.

D. Whenever a water level is measured, enter a description of the sampling location and record of the measured value onto the Groundwater Elevation form (Attachment B). Fill out the forms as described in Attachment C, Data Form Completion. If appropriate, record information regarding the elevation and thickness of the Non Aqueous Phase Liquid (NAPL) to determine the actual groundwater elevation, but this condition is not anticipated in groundwater monitoring of the Los Alamos National Laboratory or its environs.

E. Place equipment on a Teflon™ or plastic sheet, or in a stainless steel bucket

F. Remove locking well and well casing cap. Note the location, time of day, and date on the appropriate data form.

G. If required by site-specific conditions, monitor the headspace of the well with a photoionization detector or a flame ionization detector to determine the presence of volatile organic compounds and record the measurements on appropriate forms.

H. Place a survey mark in the casing as a reference measuring point. The mark should be permanent; a groove cut with a file is recommended. Mark another measuring reference on the grout apron and guard pipe. This provides consistency in future water level measurements. If the measuring point is missing, record the water level relative to the ground surface, but mark the casing at the point the measurement was made. Record the distance from the new mark to the ground surface on the data form and describe the new measuring point in the comments column of the data form. Document the measuring point on the data form.

I. Lower an electric water level measuring device or equivalent (for instance, permanently installed transducers, airline, or popper) into the well until the liquid surface is encountered. A popper is a metal cylinder with a concave undersurface that is attached to the end of a steel tape. The popper makes an audible "pop" when it hits the water allowing the distance to the water surface to be determined on the tape.

J. Measure the distance from the liquid surface to the reference measuring point on the well casing and record this distance on the data form in the comments column. If the well casing is damaged, measure from some other permanently fixed structure or the ground surface and note this modification on the data form.

K. Measure depth-to-liquid at least twice or until results are reproduced and record each measurement in the comments column of the data form. Measure the distance to the water level if it is different from the initial liquid level. Record the reproduced measurement in the depth-to-liquid column on the field form.

L. Remove all downhole equipment; replace the well casing cap and locking steel caps.

M. Rinse all downhole equipment and store for transport to the decontamination area.

N. Note any physical changes (like erosion or cracks) in the protective concrete pad or variation in the total depth of the well on the data form.

O. If using pressure transducers to measure water levels, refer to SOP-07.01, Pressure Transducers.

6.1 Preliminary Determinations

A. Complete all data collection forms and sign all pages.

B. Label monitor well or property stake the borehole and write location ID on the location stake or protective casing.

6.2 Postoperation Activities

Ensure that all equipment is accounted for and decontaminated (see SOP-02.07).

7.0 REFERENCES

Procedures directly associated with this procedure that should be reviewed prior to measuring water levels include:

LANL-ER-SOPs in Section 1.0, General Instructions.
LANL-ER-SOPs in Section 2.0, Health and Safety in the Field.
LANL-ER-SOP-07.01, Pressure Transducers.

EPA. 1986. "RCRA Groundwater Monitoring Technical Enforcement Guidance Document." U.S. Environmental Protection Agency unnumbered document. U.S. Government Printing Office, Washington, D.C.

8.0 RECORDS

A. Completed Groundwater Elevation Form

B. Daily Activity Log that may contain any additional information including deviations

9.0 ATTACHMENTS

A. Equipment and Supplies Checklist

B. Groundwater Elevation Form

C. Data Form Completion

EQUIPMENT AND SUPPLIES CHECKLIST FOR FLUID LEVEL MEASUREMENTS

_____ Site map showing well locations

_____ Steel tape and blue surveyor's chalk

_____ Electric sounder

_____ Reflection sounder

_____ Transducer and data logger

_____ Airline

_____ Petroleum product detection probe

_____ Plastic or Teflon™ sheeting

_____ Decontamination solutions

_____ Keys to well locks

_____ Tape measure graduated in 0.01 ft

_____ Indelible dark ink pens

_____ Daily Activity Logs

_____ Groundwater Elevation Form

DATA FORM COMPLETION

GROUNDWATER ELEVATION FORM

Use an indelible dark ink pen. Make an entry in each blank. Where there is no data entry, enter UNK for Unknown, NA for Not Applicable, or ND for Not Done, etc. To change an entry, draw a single line through it, add the correct information above it, and date and initial the change. For all forms, complete the following information:

1. Technical Area (TA). Two-digit number indicating the TA in which the sampling is being done or sample is being studied.

2. Operable Unit. Four-digit number indicating the operable unit in which the sampling is being done or sample is being studied.

3. Log Date and Time. The date and time when the measurement was made, in the following formats: DD-MMM-YY (e.g., 01-Jan-91), and the 24-hour clock time (e.g., 0837 for 8:37 a.m. and 1912 for 7:12 p.m.).

4. Sheet Number. Number all the sheets that are used for this activity, by day or by some practical unit.

5. Weather and other comments. Record all other conditions pertinent to the sample collection in this section on the Daily Activity Log in SOP-01.01.01.

6. Elevation. Record the elevation of the well to the ground level datum top of the casing (TOC) whichever is appropriate using survey or other information.

7. Depth-to-Water. The water level measurement in feet, tenths of feet, or hundredths of feet. if a NAPL is in evidence, record the depth to the NAPL thickness. Use the Daily Activity Log to record additional NAPL information.

8. Measurement Method and Type of Probe. Record the method of measurement and the probe manufacturer's name and the serial number of the probe.

Date _____

LOS ALAMOS NATIONAL LABORATORY
ENVIRONMENTAL RESTORATION
GROUNDWATER ELEVATION FORM

Sheet _____ of _____

Technical Area _____ Site Work Plan: _____

Operable Unit _____ Signature: _____

LOCATION	LOG DATE	LOG TIME	ELEVATION[1] GL Datum	ELEVATION[1] (TOC)[2]	TAPE READING Meas Pt.	TAPE READING Water Lvl	DEPTH TO WATER	ELEVATION GROUNDWATER	NAPL[3] THICKNESS

Measurement Method and Probe Type _____

Comments: _____

[1]Use the appropriate measuring point.

[2]TOC is Top of Casing

[3]NAPL (Non Aqueous Phase Liquid). Caution: If NAPL is encountered, the groundwater level must be corrected.

ER-SOP-07.02, R0 4/1/91

CONTACT THE PROGRAM OFFICE FOR MASTER FORMS
EXAMPLE

GROUNDWATER ELEVATION FORM

Los Alamos National Laboratory **Environmental Restoration Program** Standard Operating Procedure	No: LANL-ER-SOP-07.03 Rev: 0

Well Slug Tests

	(Print Name)	(Signature)	(Date)
Preparer:	Sandra E. Wagner	Sandra E. Wagner	11-16-91
Quality Review by:	Bruce Gallaher	Bruce Gallaher	9/30/91
Technical Review by:	STEPHEN MCLIN	Stephen G. McL	10/1/91
QPPL Approval:	Larry Maassen	Larry Maassen	10/10/91
PM Approval:	Robert W Vocke	Robert W Vocke	10/14/91

Effective Date: 3-16-92

WELL SLUG TEST

1.0 PURPOSE

This procedure defines field methods for the collection of data for determining saturated hydraulic conductivity under in situ conditions by the slug test withdrawal method of analysis for the Environmental Restoration (ER) program.

2.0 SCOPE

2.1 Applicability

This procedure is applicable for determining hydraulic conductivity using the slug test withdrawal method for the ER program.

2.2 Training

The field team leader is responsible for monitoring the proper implementation of this procedure. The field team members should be familiar with the objectives of slug testing and should document that they have both read and understand this procedure and the procedures in Section 1.0, General Instructions.

3.0 DEFINITIONS

A. Hydraulic conductivity: The flow rate of water in gallons per day through a cross section of one square foot under a unit hydraulic gradient, at the prevailing temperature (gpd/ft^2).

B. Storage coefficient(s): The volume of water an aquifer releases from or takes into storage per unit surface area of the aquifer per unit change in head.

4.0 BACKGROUND AND/OR CAUTIONS

The slug test measures the rate at which groundwater stabilizes in a well over time due to the injection or withdrawal of a mass (slug) beneath the groundwater surface. From this water level fluctuation versus time data, the hydraulic conductivity of the immediate area can be determined. Refer to the site-specific work plan for more information on the scope of work activities for which slug testing is required and the locations of the wells that are to be tested.

With the slug test the hydraulic conductivity or transmissibility of an aquifer is determined from the rate of rise of the water level in a well or borehole after a certain volume or "slug" of water is suddenly removed from the well. The slug is inserted and the water level is allowed to reach equilibrium. Then the slug is suddenly removed and the rise in water level is measured with time.

The primary advantages of using slug tests to estimate conductivities are: (a) estimates can be made in situ and errors incurred in the laboratory testing of disturbed samples can be avoided; (b) tests can be performed quickly at relatively low costs because a pumping well and observation wells are not required; and (c) the hydraulic conductivity of small, discrete portions of an aquifer can be estimated (for example, sand layers in a clay).

Limitations of slug testing include: (a) only the hydraulic conductivity of the area immediately surrounding the well is estimated, which may not be representative of the average hydraulic conductivity of the local area; (b) certain assumptions made in the analysis process; if the assumptions are inappropriate for the geologic conditions at the site, the slug test data are invalid; (c) the storage coefficient, S, usually cannot be determined; and (d) data sufficient for analysis may not be collected if the hydraulic conductivity is relatively high.

The time required for a slug test is a function of the volume of the slug, the hydraulic conductivity of the formation, and the type of well completion. The slug volume should be large enough that a sufficient number of water level measurements can be made before the water level returns to equilibrium conditions. The length of the test may range from less than a minute to several hours.

If the well is to be used as a monitoring well, take precautions so that the contamination does not occur through material introduced into the well. If water is added to the monitoring well, obtain it from an uncontaminated source and transport it in a clean container. Clean bailers or measuring devices before the test (SOP-02.07, General Equipment Decontamination). If tests are performed on more than one monitoring well, avoid cross-contamination of the wells.

Conduct slug tests on relatively undisturbed wells. If a test is conducted on a well that has recently been pumped for water-sampling purposes, the measured water level must be within 0.1 ft of the water level before sampling. At least one week should elapse between the drilling of a well and the performance of a slug test.

NOTE: The exact dimensions of the monitoring well, borehole, casing, and sand pack must be recorded to analyze the slug test data correctly.

Site workers preparing for field operations should read and understand the procedures outlined in LANL-ER-SOPs, Section 2.0, Health and Safety in the Field. In addition, site workers should refer to site-specific Operable Unit Health and Safety plans for the particular health and safety equipment to be used.

5.0 EQUIPMENT

Equipment to implement this procedure is listed in Attachment A.

6.0 PROCEDURE

The following general procedures should be used to collect and report slug test data. The procedures required for a particular slug test may vary slightly from those described, depending on site-specific conditions. Modifications to the test procedures will be contained in the site-specific work plan.

Procedures for conducting the slug test with a pressure transducer and data logger, as well as a water level probe, are described below. Be sure to complete all data collection forms.

6.1 Slug Test with Pressure Transducer and Data Logger

Before beginning the slug test, enter the required information into the electronic data logger. Information may vary, depending on the model used. When using different models, consult the operations manual for the proper data-entry sequence to be used. See SOP-07.01 for the procedure for calibration and use of a pressure transducer.

When the slug test is performed with an electronic data logger and pressure transducer, store all data internally or on computer diskettes or tape. The information will be transferred directly to the main computer and analyzed. Maintain a computer printout of the data in the files as documentation.

A. Determine the static water level in the well, measuring the depth-to-water periodically for several minutes to several hours, and taking the average of the readings (SOP-07.02, Fluid Level Measurement). Record information on the Groundwater Elevation form found in SOP-07.02. Additional information should be recorded on the Daily Activity log in SOP-01.01.01, Records.

B. Install the transducer and cable in the well below the target drawdown estimated for the test. Be sure this depth of submergence is within the design range stamped on the transducer. Temporarily tape the transducer cable to the well to keep the transducer at a constant depth.

C. After connecting the transducer cable to the electronic data logger, enter the initial water level and transducer design range into the recording device according to the manufacturer's instructions. The transducer design range will be stamped on the side of the transducer. Record the initial water level on the recording device.

D. Smoothly lower the slug or bailer into the well. Where the slug contacts the water can be detected by observing the transducer readout.

E. Allow the water level to restabilize (within 0.1 ft) and remove the cylinder or bailer. Remove the volumes as quickly and smoothly as possible, because the analysis assumes that an instantaneous change in volume is created in the well.

F. Continue measuring and recording depth-time measurements until the water level returns to equilibrium conditions or a sufficient number of readings have been made to clearly show a trend on a plot recovery versus the logarithm of time.

G. Lower the slug and repeat the data collection portions of step F.

6.2 Slug Test with Water Level Probe

If the slug test data are collected and recorded manually, record observations on the Slug Test Data form (Attachment B). Fill out the form as described in Attachment C. This method should only be used if an electronic data recorder cannot be obtained. This method cannot be used for aquifers with a high hydraulic conductivity because stabilization of groundwater will occur rapidly.

A. Determine the static water level in the well, measuring the depth-to-water periodically for several minutes and taking the average of the readings (SOP-07.02). Record results on the Groundwater Elevation form.

   NOTE: When measuring water level changes, it is important to take the measurements rapidly for accurate results.

B. Smoothly lower the slug or bailer into the well. Where the top slug contacts the water can be estimated by marking the depth-to-water found in part A onto the slug line.

C. Measure and record the depth-to-water and the time at each reading. The moment when the volume or removed is Time Zero. Depths should be measured to the nearest 0.1 ft. The number of depth-time measurements necessary to complete the test varies.

D. Continue measuring and recording depth-time measurements until the water level returns to equilibrium conditions or a sufficient number of readings have been made to clearly show a trend on a plot recovery versus the logarithm of time.

E. Lower the slug and repeat the data collection portions of steps C and D.

F. Decontaminate the downhole equipment according to SOP-02.07, General Equipment Decontamination. Cut off contaminated portions of rope and dispose of them in accordance with SOP-01.06, Management of RFI-Generated Waste.

G. If using an electronic data logger, follow the steps listed below.

   1. Stop the logging sequence.

   2. Print the data or send to the computer by telephone.

3. Save memory and disconnect the battery at the end of the day's activities.

H. Check all data collection forms for completeness.

7.0 REFERENCES

The following procedures are directly associated with this procedure and should be reviewed before slug testing:

LANL-ER-SOPs in Section 1.0, General Instructions.
LANL-ER-SOPs in Section 2.0, Health and Safety in the Field.
LANL-ER-SOP-07.01, Pressure Transducers.
LANL-ER-SOP-07.02, Fluid Level Measurement.

Bouwer, H. 1978. "Groundwater Hydrology," McGraw-Hill Book Company, New York, NY.

Bouwer, H., and R. C. Rice. 1980. "A Slug Test for Determining the Hydraulic Properties of Tight Formations," Water Resources Research 16, no. 1: 233-38.

Bouwer, H. 1989. "The Bouwer and Rice Slug Test - An Update," Groundwater 27, no. 3: 304-309.

Cooper, Jr., H. H., J. D. Bredehoeft, and S. S. Papadopulos. 1967. "Response of a Finite-Diameter Well to an Instantaneous Charge of Water," Water Resources Research 13, no. 1.

Department of Interior. n.d. "Ground Water Manual." U.S. Department of the Interior Publication, U.S. Government Printing Office, Washington, D.C.

Earlougher, R. C. 1977. "Advances in Well Test Analysis." Houston, Texas: Society of Petroleum Engineers of AIME.

Ferris, J. G. and D. B. Knowles. 1954. "The Slug Test for Estimating Transmissivity," U.S. Geological Survey Groundwater Note 26.

Freeze, R. Allen, and John A. Cherry. 1979. "Groundwater," Prentice-Hall, Inc., Englewood Cliffs, NJ.

Hvorslev. 1951. "Time Lag and Soil Permeability in Ground-Water Observations," 50. U.S. Army Corps of Engineers, Bulletin No. 36. Washington, D.C.

Johnson Division, UOP, Inc. 1966. "Groundwater and Wells," Johnson Division, UOP, Inc. Publication.

Lohman, S.W. 1972. "Ground-Water Hydraulics," 70. U.S. Geological Survey Paper 708. U.S. Government Printing Office, Washington, D.C.

Neuman, S.P. 1972. "Theory of Flow in Unconfined Aquifers Considering Delayed Response of the Water Table," Water Resources Research 8. No. 4: 1031.

Papadopulos, S. S., J. D. Bredehoeft, and H. H. Cooper, Jr. 1973. "On the Analysis of Slug Test Data," Water Resources Research 9. No. 4.

Todd, David K. 1980. "Groundwater Hydrology," 2nd ed., John Wiley & Sons, New York, NY.

Walton, William C. 1970. Groundwater Resource Evaluation. McGraw-Hill Book Company, New York, NY.

8.0 RECORDS

A. A Completed Slug Test Data Form.

B. A Completed Groundwater Elevation Form.

C. Daily Activity Log containing any deviations, calibration data, and additional comments.

9.0 ATTACHMENTS

A. Equipment and Supplies Checklist

B. Slug Test Data Form

C. Data Form Completion

EQUIPMENT AND SUPPLIES CHECKLIST FOR WELL SLUG TESTS

_____ Water pressure transducers, if appropriate

_____ Electric water level indicator or electronic data logger (if transducer method is used)

_____ Weighted tapes with plopper

_____ Steel tape (subdivided into hundredths of feet) and blue surveyor's chalk

_____ Stainless steel slug of a known volume

_____ Teflon™ or stainless bailer of a known volume

_____ Watch or stopwatch with second hand

_____ Tape measure (subdivided into tens of feet)

_____ Semilog graph paper (if required) and straight edge

_____ Appropriate references and calculator

_____ Duct tape

_____ Nonwater-soluble black ink pens

_____ Daily Activity Logs

_____ Groundwater Elevation forms

_____ Slug Test Data forms

SLUG TEST DATA FORM

LOS ALAMOS NATIONAL LABORATORY
ENVIRONMENTAL RESTORATION
SLUG TEST DATA

Date: _____ Sheet _____ of _____

Technical Area _____ Operable Unit _____ Well Number _____

Site Work Plan: _____

Signature: _____

Test Method: _____ Slug Injection or _____ Slug Withdrawal Exact Slug Dimensions: _____

Well construction details (attach diagram): _____

Method of water level measurement: _____

Comments: _____

EXAMPLE
CONTACT THE PROGRAM OFFICE FOR MASTER FORMS

ELAPSED TIME (Min)	DEPTH-TO-WATER (Ft)	ELAPSED TIME (Min)	DEPTH-TO-WATER (Ft)

☐ CHECK HERE IF CONTINUED ON BACK OF THIS SHEET

DATA FORM COMPLETION

SLUG TEST DATA FORM (ATTACHMENT B)

Use an indelible dark ink pen. Make an entry in each blank. For entry blanks for which no data are obtained, enter UNK for Unknown, NA for Not Applicable, or ND for Not Done. To change an entry, draw a single line through it, add the correct information above it, and date and initial the change. For all forms, complete the following information:

1. Technical Area (TA). Two-digit number indicating the TA in which the sampling is being done or sample is being studied.

2. Operable Unit. Four-digit number indicating the Operable Unit in which the sampling is being done or sample is being studied.

3. Log Date and Time. The date and time when the measurement was made, in the following formats: DD-MMM-YY (e.g., 01-JAN-88), and the 24-hour clock time (e.g., 0837 for 8:37 a.m. and 1912 for 7:12 p.m.).

4. Sheet Number. Number all the sheets that are used for this activity, by day or by some practical unit.

5. Weather and Other Comments. Record all other conditions pertinent to the sample collection in this section on the Daily Activity Log in SOP-01.04.

6. Test Method. The slug device is withdrawn (pulled out) from the monitor well.

7. Elapsed Time (Min). Cumulative time readings from the beginning of the test to the end of the test in minutes.

8. Depth-to-Water (Ft). Depth of water recorded in hundredths of feet.

9. Method of Water Level Measurement. Record the type of instrument used to measure water level.

10. Exact Slug Dimensions. The slug and/or bailer dimensions must be known in order to perform calculations properly.

11. Well Construction Details. The well screen length, sand pack length, cased intervals, and borehole dimensions must be known, at a minimum, to perform calculations.

Los Alamos National Laboratory **Environmental Restoration Program** Standard Operating Procedure	No: LANL-ER-SOP-07.04 Rev: 0

Aquifer Pumping Tests

	(Print Name)	(Signature)	(Date)
Preparer:	Sandra E. Wagner	Sandra E. Wagner	10-16-91
Quality Review by:	Bruce Gallaher	Bruce Gallaher	9/30/91
Technical Review by:	STEPHEN McLIN	Stephen McLin	10/1/91
QPPL Approval:	Larry Maassen	Larry Maassen	10/10/91
PM Approval:	Robert W Vocke	Robert W Vocke	10/14/91

Effective Date: 3-16-92

AQUIFER PUMPING TEST

1.0 PURPOSE

This procedure states the methods for conducting pumping tests for the determination of the hydraulic properties of water-bearing soils and rocks for the Environmental Restoration (ER) program.

2.0 SCOPE

2.1 Applicability

This procedure is applicable to field team members performing pump tests for the ER program.

2.2 Training

The field team leader is responsible for monitoring the proper implementation of this procedure. The field team member should be familiar with the objectives of pumping tests and must document that he has read and understands this and the procedures in Section 1.0, General Instructions.

3.0 DEFINITIONS

A. Transmissivity: The rate at which water is transmitted through a unit width of an aquifer under a unit hydraulic gradient (gpd/ft).

B. Specific yield: The ratio of the volume of water that a given mass of saturated rock or soil will yield by gravity to the volume of the mass expressed as a percentage (dimensionless).

C. Hydraulic conductivity: A coefficient of proportionality that describes the rate at which a fluid can move through a permeable medium. It is a function of both the media and of the fluid flowing through it (gpd/ft^2).

D. Storage coefficient: The volume of water an aquifer releases from or takes into storage per unit surface area of the aquifer per unit change in head (dimensionless).

4.0 BACKGROUND AND/OR CAUTIONS

An aquifer pumping test is a controlled field experiment to determine the hydraulic properties of water-bearing soils and rocks. Aquifer characteristics that may be obtained from pumping tests include hydraulic conductivity (K), transmissivity (T), specific yield (Sy) for unconfined aquifers, and storage coefficient (S) for confined aquifers and the vertical hydraulic conductivity of confining layers. Also, the occurrence and position of recharge or impermeable boundaries can

be identified. These parameters can be determined by graphical solutions and computerized programs.

Pumping tests are generally carried out by monitoring the water level over time in the pumping well and each observation well while the pumping well is discharged at a constant rate. These tests provide results that are more representative of aquifer characteristics than those predicted by other methods. They can also be used to determine the hydraulics of secondary aquifer flow. However, pump tests require a greater degree of activity and expense than other methods and therefore may not always be justified for all levels of investigation.

Refer to the site-specific work plan for the duration of the pumping test, the location of the observation well, and the data to be collected. Collection of measurements and documentation of data will be performed as described in the associated procedures.

Site workers preparing for field operations should read and understand the procedures outlined in LANL-ER-SOPs, Section 2.0, Health and Safety in the Field. In addition, site workers should refer to site-specific Operable Unit Health and Safety plans for the particular health and safety equipment to be used.

5.0 EQUIPMENT

Equipment to implement this procedure are listed in Attachment A.

6.0 PROCEDURE

A. Ensure that permission to discharge is obtained (an NPDES Permit may be required) or that a containment system is available for collecting water that will be pumped during the test. This is especially important for wells that may produce contaminated water. Consult SOP-01.06, Management of RFI-Generated Waste in the event that the site-specific work plan requires containerization of waste.

B. Obtain the information regarding equipment, and equipment modifications necessary to conduct a pumping test, and check the equipment for proper functioning. Obtain assurances from the site drilling crew concerning the completion of the well installation, and the development and the availability of the necessary equipment to conduct the pumping test. The drilling crew is responsible for completing the following tasks and supplying the equipment listed below before field personnel arrive:

   1. Drilling, installing, completing, and developing pumping wells and at least one observation well to the proper specifications identified in the site-specific work plan.

   2. Installing a submersible or turbine pump. All wells should be properly developed before testing.

3. Installing a flow meter in the discharge line of the pumping well to accurately measure and monitor the volume of discharge.

4. Installing sufficient pipe to transport the discharge from the pumping well away from the area to prevent infiltration into the pumped zone.

5. Installing a gate valve along with a pressure regulator on the discharge pipe to control the pumping rate.

6. Placing an outlet near the well head, but past the totalizer and flow meters, for water quality determination and sampling.

C. Calibrate all gauges, transducers, flow meters, and other equipment used in conducting pumping tests before use. Obtain copies of the instrumentation documentation and calibration. File them with the records of test data. Calibration records should contain laboratory measurements. If necessary, perform any on-site zero adjustment or calibration.

D. It is normally advisable to monitor pretest water levels at the test site for about one week before performing the test. This can be accomplished by using a continuous recording device. These records establish the barometric efficiency of the aquifer. The records also help determine if the aquifer is experiencing an increase or decrease in head with time caused by recharge or pumping in the nearby area or by diurnal variations. Record changes in barometric pressure during the test (preferably with an on-site barograph) to correct water levels for any possible fluctuations that may occur from changing atmospheric conditions. Project the pretest water level trends for the duration of the test. These trends or barometric changes may be used to correct water level measurements during the test so that they are representative of the hydraulic response of the aquifer from pumping the test well.

E. The duration of the test is determined by the needs of the project and the aquifer properties. In general, longer tests produce more definitive results. A duration of one to several days, followed by a similar period of monitoring the recovery of the water level, is desirable. There is no need to continue the test if the water level becomes constant with time. This normally indicates that a hydrogeologic source or leaky aquifer condition has been intercepted and that additional useful information will not be collected by continued pumping. One simple test for determining the adequacy of data is to plot the log time compared to drawdown for the most distant observation well. When the plot becomes a straight line on the semilog graph paper, enough data has been collected. (Ideally the straight line should continue over one log cycle.)

F. When the pumping test is performed using an electronic data logger and pressure transducer, store all data internally or on computer diskettes or tape. Directly transfer the information to the main computer and analyze it. Maintain a computer printout of the data in the files for documentation. Take manually determined measurements periodically to verify data recorded by the data logger.

G. If an electronic data logger and pressure transducer are not used, record all data on the Pumping/Recovery Test Data form (Attachment B). Data collected manually during a logger-transducer pumping test will also be recorded on the form. Fill out the form as described in Attachment C.

H. During a pumping test, measure water levels as often as necessary to produce a meaningful indication of hydraulic properties of the aquifer. Measure water levels as specified in SOP-07.02, Fluid Level Measurement, and record on the Groundwater Elevation form.

NOTE: Pressure transducers and electronic data loggers may be used to reduce the field personnel hours required for the pumping test. Please refer to SOP-07.01 for the operation instructions of pressure transducers.

I. After pumping is concluded, measure recovering water levels to verify the results obtained from the pumping portion of the test. Measure the recovering water levels in the pumping well and the observation wells for a period immediately following the cessation of pumping. Monitoring during recovery should occur for at least half the length of the pumping portion of the aquifer test. The decision to cease monitoring water levels will be based on aquifer recovery.

J. If using an electronic data logger, follow the steps listed below:

1. Stop the logging sequence.

2. Print the data or send it to the computer by telephone.

3. Save memory and disconnect the battery at the end of the day's activities.

K. Decontaminate the transducer(s) and cable(s) as specified in SOP-02.07, General Equipment Decontamination.

L. Make sure all wells are properly labeled and the location ID is readily visible on the guard pipe.

7.0 REFERENCES

The following procedures are directly associated with this procedure and should be reviewed before operations:

LANL-ER-SOPs in Section 1.0, General Instructions.
LANL-ER-SOPs in Section 2.0, Health and Safety in the Field.
LANL-ER-SOP-07.01, Pressure Transducers.
LANL-ER-SOP-07.02, Fluid Level Measurement.

Boulton, N. S. 1954. "The Drawdown of the Water-Table Under Non-Steady Conditions Near a Pumped Well in an Unconfined Formation." Proceedings of the Institution of Civil Engineers 3, Paper 5979: 564.

Boulton, N. S. 1954. "Analysis of Data from Non-Equilibrium Pumping Tests Allowing for Delayed Yield from Storage." Proceedings of the Institution of Civil Engineers 26, Paper 6693: 469-82.

Bouwer, H. 1978. "Groundwater Hydrology." McGraw-Hill Book Company, New York.

Bredehoeft, J. D. and S. S. Papadopulos. 1980. "A Method for Determining the Hydraulic Properties of Tight Formations." Water Resources Research 16, No. 1: 233-38.

Cooper, Jr., H. H., J. D. Bredehoeft, and S. S. Papadopulos. 1967. "Response of a Finite-Diameter Well to an Instantaneous Charge of Water." Water Resources Research 13, No. 1.

Cooper, Jr., H. H. and C. E. Jacob. 1946. "A Generalized Graphical Method for Evaluating Formation Constants and Summarizing Well-Field History." American Geophysical Union Transactions 27, No. 4: 526-34.

Earlougher, R. C. 1977. Advances in Well Test Analysis. Society of Petroleum Engineers of AIME publication. Houston, Texas.

Freeze, R. Allen, and John A. Cherry. 1979. ."Groundwater." Prentice-Hall, Inc., Englewood Cliffs, New Jersey.

Kruseman, G. P., and N. A. De Ridder, 1976. Analysis and Evaluation of Pumping Test Data, Bulletin 11, International Institute for Land Reclamation and Improvement, Wageningen, The Netherlands.

8.0 RECORDS

A. A completed Pumping/Recovery Test Data Form

B. A completed Groundwater Elevation form

C. Completed Daily Activity Log containing deviations, calibration data, and all other pertinent information

9.0 ATTACHMENTS

A. Equipment and Supplies Checklist

B. Pumping/Recovery Test Data Form

C. Data Form Completion

EQUIPMENT AND SUPPLIES CHECKLIST FOR AQUIFER PUMPING TESTS

_____ Water pressure transducer

_____ Electric water level indicator

_____ Weighted tapes with plopper

_____ Steel tape (subdivided into tenths of feet)

_____ Electronic data logger (if transducer method is used)

_____ Tape measure (subdivided into hundredths of feet)

_____ Watch or stopwatch with second hand

_____ Semilog graph paper (if required)

_____ Waterproof ink pen

_____ Thermometer

_____ Appropriate references and calculator

_____ Barometer or recording barograph (for tests conducted in confined aquifers)

_____ Daily Activity Logs

_____ Pumping/Recovery Test Data forms

_____ Groundwater Elevation forms

PUMPING/RECOVERY TEST DATA FORM

LOS ALAMOS NATIONAL LABORATORY
ENVIRONMENTAL RESTORATION
PUMPING/RECOVERY TEST DATA

Date: ____________ Sheet ______ of ______

Technical Area ____________ Operable Unit ____________ Pump Well No.____________

Site Work Plan: ______________________________ Observation Well No.________

Signature: ______________________________

TEST START: ____________

Date: ____________

Time: ____________

Static Water Level (Ft) ____________

TEST END: ____________

Date: ____________

Time: ____________

Static Water Level (Ft) ____________

Average Pumping Rate (Gal/Min) ____________

Measurement Methods ____________

Comments: ______________________________

____

Method of water level measurement: ____________

DRAWDOWN TEST			RECOVERY TEST	
ELAPSED TIME (Min)	DEPTH-TO-WATER (Ft)	PUMPING RATE (Gal/Min)	ELAPSED TIME (Min)	DEPTH-TO-WATER (Ft)

EXAMPLE
CONTACT THE PROGRAM OFFICE FOR MASTER FORMS

DATA FORM COMPLETION

PUMPING/RECOVERY TEST DATA FORM (ATTACHMENT B)

Use an indelible dark ink pen. Make an entry in each blank. For entry blanks for which no data are obtained, enter UNK for Unknown, NA for Not Applicable, or ND for Not Done. To change an entry, draw a single line through it, add the correct information above it, and date and initial the change. For all forms, complete the following information:

1. Technical Area (TA). Two-digit number indicating the TA in which the sampling is being done or sample is being studied.

2. Operable Unit. Four-digit number indicating the Operable Unit in which the sampling is being done or sample is being studied.

3. Log Date and Time. The date and time when the measurement was made, in the following formats: DD-MMM-YY (e.g., 01-JAN-88) and the 24-hour clock time (e.g., 0837 for 8:37 a.m. and 1912 for 7:12 p.m.).

4. Sheet Number. Number all the sheets that are used for this activity, by day or by some practical unit.

5. Weather and Other Comments. Record all other conditions pertinent to the sample collection in this section on the Daily Activity Log in SOP-01.04.

6. Distance From Pumped Well (ft). Distance the observation well is from the pumping well in feet and tenths of feet.

7. Static Water Level (ft). Depth-to-water in feet and hundredths of feet in the observation well at the beginning of the pumping test.

8. Test End Date. The date when pumping ceased.

9. Test End Time. The time when pumping ceased.

10. Static Water Level (ft). Depth-to-water in feet and hundredths of feet in the observation well at the end of the pumping test.

11. Average Pumping Rate (gal/min). Total volume pumped (from totalizer meter) divided by the total elapsed time.

12. Measurement Methods. Type of instrument used to measure depth-to-water (may include steel tape, electric sounding probes, Stevens recorders, level heads, or pressure transducers).

Los Alamos National Laboratory **Environmental Restoration Program** Standard Operating Procedure	No: LANL-ER-SOP-09.01 Rev: 0

Thin Section Preparation

	(Print Name)	(Signature)	(Date)
Preparer:	DAVID A. MANN	[signature]	9-5-91
Quality Review by:	DAVID BROXTON	David Broxton	9/5/91
Technical Review by:	A.W. Laughlin	A.W. Laughlin	9/5/91
Technical Review by:	Anthony R. Grieggs	Anthony R. Grieggs	9/11/91
QPPL Approval:	Karen L. Foster	Karen L. Foster	11/7/91
PM Approval:	Robert W Vocke	Robert W Vocke	11/8/91

Effective Date: 3-16-92

THIN SECTION PREPARATION

1.0 PURPOSE

The purpose of this procedure is to document the process for the preparation of thin sections from rock samples. Thin sections are used for geological analysis on the microprobe, various microscopes, and for other geological analysis.

2.0 SCOPE

2.1 Applicability

This procedure covers any geologic thin sections prepared in Earth and Environmental Sciences (EES) Division for the Environmental Restoration program, and it is applicable to all personnel who prepare these sections.

2.2 Training

Any person producing thin sections must receive on-the-job training and must be skilled enough to produce thin sections that are acceptable for the intended use.

3.0 DEFINITIONS

A. Thin sections: For the purpose of this procedure, the term thin section will refer to standard petrographic thin sections, as well as grain mounts and fluid inclusion slides.

4.0 BACKGROUND AND/OR CAUTIONS

Preparation of thin sections requires a fine level of skill which cannot be completely described. Also, even a competent preparer may not always produce useable results. Therefore, the final determination of the quality of a thin section must be made by the requestor who decides if the thin section is suitable for the end use.

Of critical importance to this procedure is the accurate transference of sample identification to the thin sections. Samples are to be locked up during non-working hours. Also, all samples must be in locked storage when they are not being used. After thin sections are produced, the thin sections and all remaining sample material are to be returned to the requestor.

Be sure to refer to the appropriate Material Safety Data Sheet (MSDS) when working with the chemicals listed in Section 5.0, Equipment.

5.0 EQUIPMENT

See Attachment A, Equipment and Supplies Checklist, for a list of equipment required for this procedure.

6.0 PROCEDURE

A. The requestor submits samples for thin section preparation by completing the thin section request form (Attachment B). The request is entered into the thin-section laboratory log book.

B. Set samples (pre-numbered in ink) on the table in rows. Mark the sample number in an aluminum dish and on a bag. Use extreme care to mark the sample ID correctly. Set the bag under the rock and place the aluminum dish upside down on top of the rock. Do this for every rock sitting on the table.

C. At this point it must be decided if the sample needs to be impregnated to aid in its slabbing. This is a subjective decision made by the technician. If not, go on to D.

1. If the sample needs to be stabilized by impregnation, place it on top of a cookie sheet covered with aluminum foil.

2. Paint the surface of the rock completely with epon 815-diethylene triamine. Make sure the sample ID is still clearly legible. If not, write the ID in lead pencil on a piece of paper and attach the paper to the epoxy surface.

3. Allow the epoxy to cure before proceeding (24 hours at room temperature, 30-45 minutes in the oven).

D. Use appropriate slabbing saw to cut a slab 3/8 to 1/2 in. thick. Set the slab on top of the corresponding aluminum dish and put the excess material in the bag that has been pre-numbered. At this point, refer to the worksheet to determine whether to core each sample with the diamond core or cut them to chip size with the diamond saw. Use a round or rectangular slide to find the best area on the sample for the thin section. Trace around the pattern with a marking pen. Thin-sections are prepared in accordance with commonly accepted practices, such as those described in the reference.

7.0 REFERENCES

Logitech Machine System's Technology Manual for Thin Rock Section Production, 20 pp.

8.0 RECORDS

The records produced by this procedure are completed Thin Section Request Forms and entries into the Thin Section Laboratory Logbook.

9.0 ATTACHMENTS

A. Equipment and Supplies Checklist for Preparation of Thin Sections

B. Thin Section Request Form.

EQUIPMENT AND SUPPLIES CHECKLIST FOR PREPARATION OF THIN SECTIONS

Small supplies:

_____ Aluminum dishes

_____ Sample bags

_____ Cookie sheet

_____ Aluminum foil

_____ Round or rectangular slides

_____ Indelible marking pen

_____ Typewriter correction fluid

_____ Lead pencil with eraser

_____ 12" Forceps

_____ One 40-ml beaker, two 600-ml beakers, and two 150-ml beakers

_____ Pliers

_____ Glass stir rod

_____ Clean wipes

_____ Tongs

_____ Dial-caliper

_____ Probe or pick

_____ Razor blade

_____ Large tweezers

_____ "600" Glass plate

_____ Staining dish

EQUIPMENT AND SUPPLIES CHECKLIST FOR THIN SECTION PREPARATION (Continued)

_____ Rubber suction cup bent at 90 degree angle

_____ Back drop mounting plate

_____ Microscope cover glass (or cover slips)

_____ 1-inch round ring mold.

Large Equipment:

_____ Slabbing saw

_____ 8" or 10" diamond saw

_____ Diamond core drill press

_____ Oven

_____ Vacuum Chamber

_____ High- and low-speed lap with 100 mesh plate and 1, 3, 6, 30, 40, and 45 micron plates

_____ Hot plate

_____ Logitech (LP 30) with 1/4-inch rubber and 1-inch thick piece of foam

_____ Dial-o-gram balance with disposo weigh boat

_____ Ultrasonic cleaner

_____ Air blower

_____ Electric engraver

_____ Ingram thin-section cutoff saw

_____ Ingram grinder

_____ Petrographic microscope

_____ Dust chaser.

EQUIPMENT AND SUPPLIES CHECKLIST FOR THIN SECTION PREPARATION (Concluded)

Chemicals:

_____ Epon 815-diethylene triamine

_____ Shell epoxy

_____ Buehler epoxy

_____ Aluminum oxide (1200 grit)

_____ Kerosene

_____ Pella oil

_____ Silicone carbide (600 grit)

_____ Isopropyl or ethyl 190 alcohol

_____ Distilled water

_____ Sodium-cobaltinitrite powder

_____ Isopropanol

_____ Hydrofluoric acid

_____ Tap water

_____ Barium chloride

_____ Methanol (MeOH)

_____ Amaranth powder

_____ Diamond paste (1, 3, and 6 micron)

_____ 6 micron diamond spray

_____ Diamond Polishing Extender (mixture of propolenegycol and isopropanol)

_____ Duro Super Glue.

THIN SECTION REQUEST FORM

LOS ALAMOS NATIONAL LABORATORY
ENVIRONMENTAL RESTORATION
THIN SECTION REQUEST FORM

Sheet _____ of _____

Site Work Plan _____

Technical Area _____

Inclusive Sample Identifiers:

Operable Unit _____

_____ to _____

Signature: _____ Date: _____

Priority (check one):

_____ 1 Day
_____ 3 Days
_____ 2 Weeks
_____ Space Available

Date Submitted _____

Number of Samples _____

I. TYPE OF MOUNT (check one):

___ Glass Rectangular ___ Glass Round ___ Epoxy Casting
___ Silica Rectangular ___ Silica Round ___ Probe Standard

II. THICKNESS REQUIRED (check one):

___ Unlimited ___ 150 µ ___ 30 µ

III. POLISHING REQUIRED (check one):

_____ None, _____ Polished on Bottom Side, _____ Polished on Top Side, _____ Polished on Both Sides

IV. SPECIAL INSTRUCTIONS

_____

_____

_____

V. SAMPLE NUMBER

_____	_____	_____	_____
_____	_____	_____	_____
_____	_____	_____	_____
_____	_____	_____	_____
_____	_____	_____	_____
_____	_____	_____	_____

SAMPLE LOG SHEET

Samples received in Sample Prep Lab _____ _____
Signature Date

Samples distributed to _____ _____
Signature Date

❑ CHECK HERE IF INFORMATION IS RECORDED ON BACK OF FORM

ER-SOP-09.01, R0, 4/91

EXAMPLE
CONTACT THE PROGRAM OFFICE FOR MASTER FORMS

Los Alamos National Laboratory **Environmental Restoration Program** Standard Operating Procedure	No: LANL-ER-SOP-9.02 Rev: 0

Operating the Microprobe

	(Print Name)	(Signature)	(Date)
Prepared by	Marjorie G. Snow	M G Snow	2-3-92
Quality Review by	Larry Maassen	Larry Maassen	2/14/92
Technical Review by	A.W. Laughlin	A W Laughlin	2/7/92
PM Approval	Robert W Vocke	Robert W Vocke	3-4-92
QPPL Approval	Karen L Warthen	Karen L Warthen	3/4/92

Effective Date: 3-16-92

Operating the Microprobe

Table of Contents

1.0 PURPOSE 2

2.0 SCOPE 2
- 2.1 Applicability 2
- 2.2 Training 2

3.0 DEFINITIONS AND/OR ABBREVIATIONS 2

4.0 BACKGROUND AND/OR CAUTIONS 3

5.0 EQUIPMENT 3

6.0 PROCEDURE 4
- 6.1 Sample Preparation 4
- 6.2 Microprobe Start-up 4
- 6.3 Boot computer 5
- 6.4 Saturating the Filament 6
- 6.5 Quantitative Standard Analysis 7
- 6.6 Quantitative Unknown Analysis 11
- 6.8 Shut Down of Microprobe 12
- 6.9 Instrument Calibration 13
  - 6.9.1 EDS Gain and Resolution 13
  - 6.9.2 Faraday Cup 13
- 6.10 Acceptance/Rejection Criteria 14

7.0 REFERENCES 14

8.0 RECORDS 15

9.0 ATTACHMENTS 15

Operating the Microprobe

1.0 PURPOSE

This procedure provides instructions for the operation of the Cameca MBX Electron Microprobe and Tracor Northern (TN) Series II X-ray Analyzer.

2.0 SCOPE

2.1 Applicability

This procedure applies to electron microprobe analyses of geologic specimens and other materials documented as Los Alamos Environmental Restoration (ER) Program samples using the Cameca MBX Electron Microprobe and TN Series II X-ray Analyzer.

2.2 Training

Training for operators consists of reading and applying this procedure and the instruction manuals for the Camera MBX Microprobe, SANDIA TASK8 Automation System and Tracor Northern Series II X-ray Analyzer. Additionally, operators receive training through hands-on operation of the equipment under the supervision of the machine custodian. The training is recorded by the machine custodian in the ER EMP System Logbook and in the operator's personnel file.

3.0 DEFINITIONS AND/OR ABBREVIATIONS

A. TN: Tracor Northern (now Noran Instruments, Inc.)

B. EDS: Energy Dispersive Spectrometer

C. WDS: Wavelength Dispersive System

D. EMP: Electron Microprobe

E. EMP System: Combined Cameca MBX Electron Microprobe & Series II X-ray Analyzer System.

F. SANDIA TASK8: A Subroutined Electron Microprobe Automation System.

G. BA: An empirical matrix correction program used specifically for oxide minerals. Refer to B85: A Bence-Albee Oxide Analysis Program with Mineral Code Capabilities.

H. PRZ: A quantitative matrix correction technique based on the depth distribution of X-ray production. Refer to PRZ85: A Subroutined Quantitative Analysis Correction Procedure Using the Bastin q(rz) Technique

4.0 BACKGROUND AND/OR CAUTIONS

The basic principle of the Electron Microprobe is the generation of a highly focused beam of electrons which strike and interact with the constituent elements of the target specimen. These interactions produce characteristic x-rays which are then detected by wavelength and energy dispersive spectrometers. The intensity of each x-ray is proportional to the concentration of the element present. Through comparison of the corrected X-ray intensity from each element to those from specimens of known concentration, unknown compositions may be quantitatively determined.

It is the responsibility of the machine custodian to perform the routine maintenance of the system including: system software and electronically-stored system back-ups; calibration of EDS gain; EDS resolution check; Faraday Cup check; instruction of the operators in the use of the system; and certification of operators for this procedure. The machine custodian may delegate responsibilities documenting any delegation in the ER EMP System logbooks.

Operators are responsible for calibration of semi-quantitative and quantitative analytical routines used in their particular data acquisitions. The Operator must ascertain that all EMP systems are operational before an investigator begins a microanalysis session. The Operator determines acceptance or rejection of data generated by the Electron Microprobe analysis routines. The Operator also is responsible for the proper storage and disposition of hard copy and magnetic media data records, and disposition and/or storage of samples and materials. Acceptance criteria will be entered on the Daily Activity Log (SOP-01.04). Deviations from this procedure must be documented by the responsible Investigator on the Daily Activity Log.

Malfunction of the EMP System should be readily detectable by operators during analysis of standards. If the operator is uncertain, he/she may consult with the machine custodian. If the EMP vacuum system is not sufficient to allow operation, consult with the machine custodian.

Normal interior building temperature and humidity are acceptable for the operation of the EMP System. Cooling water for the EMP diffusion vacuum pump is supplied by a chilled water system maintained in the range of 40° to 70°F. Ambient air temperature for the EMP System should range between 60° and 80°F. Operators should take extra precaution to ensure the instrument maintains calibration by checking standards more frequently when environmental conditions are out of range.

5.0 EQUIPMENT

- The Electron Microprobe is a Cameca Model MBX (purchase date 1976). Refer to the Cameca Operating Manuals for description of this system.

- The X-Ray Analyzer is a Tracor Northern Series II X-Ray Analyzer (purchase date August 1988). Refer to the Tracor Northern Operator's Manual for this system.

- EMP System software is commercially acquired software that includes Sandia Task 8 and the TN Series II X-ray Analyzer Software. Both software packages operate under the "FLEX" operating system, manufactured by Noran Instruments (formerly Tracor Northern Instruments). Software upgrades are received as releases directly from the software manufacturers.

6.0 PROCEDURE

Certified standards should be used for calibration of quantitative x-ray analysis routines. Operators may use other standards for specific applications but must document the basis for usage of these standards on the Daily Activity Log.

Data consist of elemental information which is printed following each analysis. Paper hard copy contains the sample identifier cross referenced to the operator's ER sample number in their own ER notebook. Elemental information is also stored on magnetic media for retrieval at a later date.

6.1 Sample Preparation

Samples to be examined in the EMP System must be in a form or size that can be attached to an EMP sample mount and inserted into the EMP sample chamber. Before being placed in the EMP System, all non-conductive samples must be given an electrically conductive carbon coating. Conductive samples may not require coating. The operator will determine if a conductive coating is appropriate. Carbon coating procedures are obtained in the Instruction Manual, Ladd Vacuum Evaporator.

Sample identification and control are described in SOP-1.04, Sample Control and Documentation. If it is not practical to place entire ER sample identification number on the sample mount, an abbreviated number may be placed on the mount, but the abbreviated number must be keyed to the full number in the operator's ER notebook.

6.2 Microprobe Start-up

6.2.1. The microprobe is in Stand-by condition after shut down at the end of the previous work day.

6.2.2. Fill the liquid nitrogen cold trap. Refill it in approximately 30 minutes; then every four hours.

6.2.3. If it is not already on, turn on the TN Series II monitor power switch located on far lower right side of the monitor console, next to the contrast dial. Turn contrast up to acceptable level.

6.2.4. Turn on the TV camera adaptor located below the TV monitor. Turn on the TV monitor.

6.2.5. Turn on the Light Microscope Illuminator by pushing in the Illuminator button. Switch the toggle below it to High.

6.2.6. Position the white toggle switch located on the column above the stage indicators to reflected light. (Up is reflected light , middle is off, and down is transmitted light.)

6.2.7. Activate the Vacuum System by switching the toggle on the left front of the vacuum chassis to OPERATE.

6.2.8. Verify that the vacuum system has achieved suitable vacuum (less than 5 x 10^{-5} torr) as read from the secondary gauge position of the vacuum gauge and the Secondary Vacuum light is now on. If the secondary vacuum light does not come on consult with the machine custodian.

6.2.9. Verify that the program TASK8 is running by looking for the "TASK8": prompt at the bottom of the TN Series II monitor. If the prompt is correct proceed to step 6.4. If the prompt is not correct, type X 'TASK' (CR). If the prompt is now correct proceed to step 6.4, if it is still not correct continue in sequence and boot the computer.

6.3 Boot computer

6.3.1. Press the Reset switch located just below the Power switch on the TN Series II console (just to the right of diskette drives 5 and 6) and step through the following sequence of inputs.

- (prompt on the printer) "28"
  (prompt on the printer, sometimes absent)"START"
- If the "28" prompt does not appear turn the computer power switch (above the Reset) Off; wait 5 minutes then turn it back on and start section 6.3.1 again. If it still does not boot correctly, consult with the machine custodian.
- (type) DL (CR)
- Wait for all the Program section softkeys to light up and then turn off. The TN logo will appear on the monitor screen.
- Press the PROGRAM soft key (Program section of the soft-key board).
- Select the LOAD FLEXTRAN option (option 0 will be highlighted when 0 is typed) and (CR).
- (prompt) "SETUP COMPLETE", type (CR).
- Press the RUN soft key
- When the asterisk (*) prompt appears, (type) X 'START' (CR)
- (prompt) "SKIP RAM DISK INITIALIZATION (Y/N)?"
- (type) N (CR).

6.3.2. The system will take about two minutes to initialize the RAM and load libraries, system files, and general subroutines. It will then display these messages:

- "(Current date and time) Ram disk initialized"
- "Position paper to the tear-off point and then hit the space bar". Do so.
- "Use CONFIG file (CR or new #) 4000 ?"
- (type)(CR). (Configuration file 4000 is set up to use an accelerating potential of 15 KeV. This is an optimum setting for most samples: sulfides however may require 20 KeV accelerating voltage. If another accelerating voltage is required consult with machine custodian. If the operator chooses to use another accelerating voltage, it must be documented in the operators ER notebook.)

6.3.3. The program will then display the current spectrometer and stage positions and ask "OK(Y/N)?". The current stage idle position (referred to as Standard Focus or Sta Fo) is posted beside the EMP and all spectrometers are parked at .50 (sine theta) overnight. Check the mechanical indicators on the stage and spectrometers and determine if the readouts are approximately the same as those listed. If the values are approximately the same, type (CR) and proceed to step 6.4. If the values are not similar, type N (CR) and continue with this sequence.

6.3.4. If a 'N (CR)' is entered, the computer will read out each one of the LED displays in the following order: X axis, Y axis, Z axis, spectrometer 1, spectrometer 2, spectrometer 3, and spectrometer 4. As each axis is listed, if the LED and the mechanical indicators agree then type a (CR). If they do not agree, type in the value as read from the mechanical indicators and then type a (CR).

6.3.5. After listing spectrometer 4, the computer will again type out all values and ask if "OK(Y/N)?". If the positions are now correct type a (CR) and continue to 6.4. If the positions are not correct type N (CR) and repeat the above step until they are correct.

6.3.6. The computer will now auto-load standard and element tables, look for the next free data file (on the operator's personal diskette) and then display the TASK8: prompt.

6.4 Saturating the Filament

6.4.1. Verify that the Secondary Vacuum LED is now on. If it is not, verify that the vacuum reading on the secondary gauge is less than 5×10^{-5} torr and press the silver reset button. The Secondary Vacuum LED should then come on. If the Secondary Vacuum LED does not come on, consult with machine custodian.

6.4.2. Type GET STA THO (CR). This will move the stage to the thorium standard and allow the Investigator to see the beam when it is turned on. Use the Z axis on the joystick to focus on the thorium standard.

6.4.3. Type D B-1 (CR). This will release computer control of the filament circuit.

6.4.4. Turn the Absorbed Current Range Selector to 3×10^{-8} ampere.

6.4.5. Push in Filament Power Supply Button .

6.4.6. Saturate the filament in the following manner: Slowly turn the Filament Temperature Knob clockwise to about 4 to 8. Watch the Absorbed Current Meter. The meter will read a fast rise in signal and then level out. The object is to peak the filament temperature just into the level out, or plateau area. Verify that the beam is visible on the thorium standard via the TV monitor. Select the largest square on the Raster Size Control Panel. Wait 15 minutes before proceeding to the next step; this will allow the beam to stabilize.

6.4.7. Type D B 15 (CR). This will allow the computer to define the beam to fifteen nanoamperes, the most commonly used beam current and then blank the beam. However, the Investigator may choose the appropriate beam current and note it in the investigator's ER logbook.

6.4.8. Type UNB (CR). This will unblank the defined beam and allow viewing.

6.4.9. Press the Spot Raster Size Control button.

6.4.10. Use Lens 3 to make the spot as small as possible.

6.4.11. Use the Z axis on the joystick control to recheck the focus.

6.4.12. Center the beam raster on the TV Monitor crosshairs by turning the two Optical Microscope Adjuster Knobs. The adjuster knobs are located at the base of the column in the 'vee' created by the column and spectrometers 1 and 4.

6.4.13. Press the large square of the Raster Size Control.

6.4.14. Type BL (CR). This will blank the beam

6.5 Quantitative Standard Analysis

6.5.1. Insert the Certified Operator's personal disk into drive 5 (if not already there).

6.5.2. If a catalogue of the disk is desired, type CAT (CR). When prompted "Device #", enter the number of the disk drive (5) (CR), and (CR) again to list all of the disk contents. Note the last data file used and the next unused file on a piece of scratch paper.

6.5.3. The Certified Operator will select a Primary standard or group of standards from a standards list. The selected standard(s) should be similar chemically (e.g., carbonate, oxide, or silicate) to the unknown being analyzed. If a Primary standard is not available for a particular element the Certified Operator will select another standard and document the basis for usage in his/her ER notebook.

6.5.4. Type GET STA XXXX (CR), (where XXXX is the one to four character label of the selected standard). This will move the stage to the selected standard. Focus using the Z axis control on the joystick and if necessary manually drive onto the standard.

6.5.5. If analyzing oxide phases continue with this sequence. In this context, any mineral containing oxygen is considered to be an oxide phase. If analyzing non-oxide phases proceed to section 6.5.7.

6.5.6. Type Q BA (CR) for analysis of oxide phases. When prompted for the BA Definition File number, enter 110 for a generic Definition File that utilizes the Bence-Albee routine with mineral codes or enter the file number of the Certified Operators own previously set-up file. (Refer to "BA85: A Bence-Albee Oxide Analysis Routine with Mineral Code Capabilities" for information on setting up analysis-specific mineral codes. Refer to "Sandia Task8C" for information on setting up a Definition File for an analysis routine that does not access the mineral code routines). Proceed to section 6.6.8.

6.5.7. To perform analysis of non-oxide phases (e.g., the sulfides), the PRZ matrix correction program must be used. Type LOAD ELEMENT 112 (CR) to load an element table containing PRZ correction factors. Then type Q PRZ (CR). Refer to "SANDIA TASK8C" for information on how to set up a PRZ definition file and then, by following the prompts, create a definition file appropriate to analyze the desired elements. Continue in this sequence.

6.5.8. The file settings will be printed and the computer will ask if "OK(Y/N)?". Check to determine that the settings are appropriate. If the file is correct type a Y (CR). If the file does not meet the analysis requirements type a N (CR) and follow the prompts to correct the file. When prompted again "OK(Y/N?" type a Y (CR) or repeat this step to further correct the file.

6.5.9. When prompted for the Setup file number, enter 1 (CR). The file settings for Page 1 of the Set-up file will be printed. Check that the printed settings meet the analysis requirements and then press the Cancel key. If they do not meet the analysis requirements, highlight the parameter to be changed and

type in the correct value. When correct, press the Cancel key. Follow the same procedure for Page 2 of the Set-up file and then when asked, "OK(Y/N)?" type Y (CR).

6.5.10. When prompted "SET-UP FILE #1 OK(Y/N)?" type Y (CR).

6.5.11. When prompted "BEAM SIZE, µM?" type the beam size selected: spot = (approximately) 1 µm (diameter), small square = (approximately) 5 µm (diameter), large square = (approximately) 17 µm (diameter).

6.5.12. When prompted "PRINTER LABEL" type the ER sample number or an identifier for the sample or group of samples to be analyzed and (CR). The Certified Operator will cross-reference any analysis identifiers to the ER sample numbers in his/her ER notebook.

6.5.13. When prompted "ANALYST", the Certified Operator will type his or her complete last name and a (CR).

6.5.14. When prompted "RESERVE FILE SPACE FOR 48 PTS (NEW # OR CR)?" type the estimated number of analyses desired from this sample and (CR).

6.5.15. At the prompt "1 FILES ARE REQUIRED. START AT #?(NEW OR CR)?" type the next unused file number as noted in step 6.5.2. and (CR). (The ? will be the next unused file number as stored from Section 6.5.2.

6.5.16. At the prompt "DISK LABEL" check that the correct sample identifier is listed (as entered in section 6.5.12): if correct type a (CR); if incorrect type N (CR) and, when prompted, type the correct sample identifier.

6.5.17. The computer will now open the file on the Certified Operator's disk, and print the available mineral codes if accessing a mineral code routine. When the system is ready to perform an analysis it will prompt; "<WHITE> = WDS, <RED> = EDS, B=BLANK, U=UNBLANK, <CNTRL-G> = END" Pressing the white button will start a WDS analysis; pressing the red button will start an EDS acquisition, and typing a control-G will close the QUANT routine and return to the main TASK program.

6.5.18. Check that the standard you wish to analyze is in focus optically on the TV monitor and then press the white joystick button.

6.5.19. If using BA Definition file 110, the computer will ask "ENTER THE MINERAL CODE:". Type the three letter mineral code of your choice (see 6.5.17) and (CR).

6.5.20. If a Bence-Albee routine is being used, when the analysis is complete the computer will prompt "SAVE THIS ANALYSIS (Y/N)?". The Certified Operator will verify that the results are within acceptable limits of the listed

values for the standard analyzed. It is the Certified Operator's responsibility to define his or her acceptance criteria, however, if the calculated value is within ± two sigma (the error printed to the right of the calculated weight percent is one sigma) of the listed values then the analysis is generally considered acceptable. If the above prompt is answered with a Y (CR), then the computer will prompt for a "TAG" for this point. The Operator may enter an identifying tag composed of a maximum of 23 characters. Caution: use no spaces or commas. (If the PRZ routine is used there will be no save/reject or tag option-all points will go to disk).

6.5.21. If, in the Certified Operator's judgement, one or more elements are not in calibration, then type a period (.) to return to the TASK prompt and calibrate. Individual elements are calibrated by typing (at the TASK8: prompt) "CAL XXX" (where XXX stands for the reference element, e.g.,. Si1) and (CR). The stage will drive to the selected standard coordinates and prompt the operator "HIT JOYSTICK #1 WHEN READY". Select a spot for calibration, focus optically, and push the white button on the joystick box.

6.5.22. Following calibration of one or more elements, standards should be re-run to assess the new calibration. If the Certified Operator deems the EMP system to be in calibration then he/she should type, (at the TASK8: prompt), SAV EL 110 (CR) or the number of the element table currently being used. This will save the current calibration to disk. Answer the following question prompts.

- "110 MULTIREF BA (DATE LAST SAVED) OK?" The question is asking if you intend to write over the old file.
- If your answer is yes, type (CR). This will update the calibration on disk.
- When prompted by the program, "ENTER LABEL," type 110 MULTIREF BA, (or the number of the element table being used), the current date, and then a (CR).
- If you intend to store the current calibration under a new file number type N (CR) and, when prompted, type the new file number. The computer will check to determine if the new number is used. If not, a title will be requested. The title is limited to 23 characters. Use your last name, some identifier mnemonic, and the date. If the new number is already used consult with machine custodian for an unused file number.

6.5.23. When the Certified Operator deems the system to be calibrated then analysis results from the appropriate standards must be stored on disk and analysis of ER samples may proceed.

6.5.24. The Certified Operator may type a period (.) with no (CR) and return to the TASK prompt for execution of any one TASK command. At the completion of the TASK command there will be no prompt and the system will wait for a joystick button to be pressed (i.e. initiate a quantitative or qualitative

analysis) or for another period (.) to be typed. Refer to "SANDIA TASK8C for more information regarding TASK commands.

6.6 Quantitative Unknown Analysis

6.6.1. Once appropriate standards have been run and the EMP System is deemed calibrated then an unknown sample may be analyzed. The following commands may be issues from 'within' a Quant routine by typing the period (.) for execution of one TASK command, or the Quant file may be closed out (control-G) and another fill opened for the unknown sample.

6.6.2. To insert a sample into the EMP for analysis, first ascertain that there is no sample currently resident in the EMP. Look at the position of the sample shuttle handle: if it is in the 3:00 o'clock position there is probably a sample in the chamber. If there appears to be a sample in the EMP refer to 6.7. If the shuttle handle is in the 12:00 o'clock position continue with this sequence.

6.6.3. Type CH (CR) (or if "within" a Quant routine, type period (.), wait for the TASK8: prompt, then type CH (CR)). This will move the stage to the sample change coordinates. Before proceeding compare the mechanical stage indicator positions with the sample change positions posted on the EMP. If the mechanical indicators are not correct, use the joystick to drive to the correct coordinates. Load the sample in the sample holder and screw the holder into the airlock with the handle in the 12 o'clock position.

6.6.4. Press the Pump-Down button and wait for the Valve Driving LED to come on. (If it does not come on consult with machine custodian.)

6.6.5. Once the Valve Driving LED is on, open the airlock lever counter-clockwise. While keeping the shuttle handle in the 12:00 o'clock position, push the shuttle handle all the way in, and then turn the shuttle handle to the right 90 degrees to the 3 o'clock position. Pull the shuttle handle out, still in the 3 o'clock position.

6.6.6. Close the airlock valve by rotating the airlock lever clockwise.

6.6.7. Press the Air Inlet button and wait about 3 seconds. Press the Off button.

6.6.8. Type a period (.) and wait for the TASK8: prompt. Then type GET POINT 46 (CR). This will move the stage to the approximate center of the thin section holder.

6.6.9. Analyze the unknown sample following sections 6.5.5-6.5.24 if opening a new file, or section 6.5.18-6.5.24 if using an existing file.

6.6.10. Standards should be run several times throughout an analysis session or whenever the Certified Operator questions the validity of an analysis.

6.7 Changing Samples

6.7.1. Type a period (.) and wait for the TASK8: prompt. Then type CH (CR). The stage will move to the sample change coordinates.

6.7.2. Verify that the mechanical indicators match the sample change coordinates listed in the microprobe logbook. If they do not, use the joystick controls to drive to the change coordinates.

6.7.3. Press the Airlock Pump Down button.

6.7.4. Wait until the valve driving LED is on.

6.7.5. Open the Airlock valve by rotating the airlock lever counter-clockwise.

6.7.6. Insert shuttle handle with the handle in the 3 o'clock position and when in completely, rotate the handle counter- clockwise to the 12 o'clock position.

6.7.7. Pull the sample holder handle out.

6.7.8. Close the Airlock valve by rotating the airlock lever clockwise.

6.7.9. Press the Air Inlet button and wait 3 seconds.

6.7.10. Press the Off button.

6.7.11. Unscrew the sample holder from the Airlock.

6.7.12. Change sample holders.

6.7.13. Screw the sample holder back into the Airlock

6.7.14. Repeat steps 6.7.3 to 6.7.8.

6.8 Shut Down of Microprobe

6.8.1. Remove the thin section from probe following steps in section 6.7.

6.8.2. If still in a QUANT routine, terminate it by typing CONTROL-G.

6.8.3. Put the probe in an idle mode.

6.8.3.1. Type LOA SCHED 10 (CR). This will load schedule 10 and return the TASK8: prompt.

6.8.3.2. Type RUN BYBY (CR). This schedule will drive each spectrometer to a safe position (.50), and park it there, position the stage to the STANDARD FOCUS, and release the beam to an unregulated mode.

6.8.3.3. Wait until the absorbed current meter indicates the beam is on and then turn the Filament Temperature knob gently counter-clockwise to zero.

6.8.3.4. Release the Filament Power Supply button.

6.8.3.5. Turn off the TV camera adaptor.

6.8.3.6. Turn off the power switch on the TV Monitor.

6.8.3.7. Release the Light Microscope Illuminator button and toggle the switch below it to low.

6.8.3.8. Deactivate the High Vacuum System by flipping the toggle switch on the left front of the Vacuum Chassis to STANDBY.

6.8.3.9. Remove your floppy disk or diskette and place it in the storage box.

6.8.3.10. Power down the SyQuest if it is in use.

6.8.3.11. Turn the TN Monitor contrast down to the minimum.

6.9 Instrument Calibration

6.9.1 EDS Gain and Resolution

The gain on the EMP System EDS will be checked annually by following the energy calibration instructions in the Series II X-Ray Analyzer Operator's Manuals using copper energy lines. Tolerance is $\pm$ 20 eV. If the grain is out of tolerance, it will be the machine custodian's responsibility to calibrate it by running the gain calibration program as described in the Tracor Northern Manual. The resolution of the Series II EDS will be checked annually by measuring the full width at half maximum of the K alpha line from manganese. This is a check only for degradation of the detector; no calibration or adjustment is made.

6.9.2 Faraday Cup

The machine custodian will check the accuracy of the Faraday Cup annually with a 1.34 volt Mercury battery current source (1.34 volts is a physical constant for a Mercury battery). Acceptable values are 9.95×10^{-9} amperes, $\pm 1 \times 10^{-9}$ amperes. If the accuracy of the Faraday Cup is out of tolerance, it will be the machine custodian's responsibility to affix a tag stating "DO NOT USE" to the instrument and to repair the instrument so that it will be within the required tolerance (refer to Section 6.6 and 6.7 of TWS-QAS-QP-12.1).

6.10 Acceptance/Rejection Criteria

Quantitative X-ray analytical data must have acceptance limits set by operators. Some potential sources of uncertainty will be revealed by the inability to achieve an acceptable calibration as evidenced by running the certified standards as unknowns and comparing the calculated values to the listed standard values. Operators will accept or reject all quantitative data based on analyses of certified standards.

Special research needs may require deviations from this procedure. The operator must document any deviations in his/her ER logbook.

Following completion of EMP analytical investigation, samples will either be maintained in the custody of the Investigator or returned or to the permanent sample storage room. Use the Chain-of-Custody/Request for Analysis form in SOP-01.04 to document custody and sample traceability.

7.0 REFERENCES

Documents referenced in this procedure are:

LANL-ER-SOP Section 1.0, General Instructions

LANL-ER-SOP-09-09, Certification of Standards for Electron Microanalysis

Cameca Model MBX Electron Probe/SEM Description, Use, Maintenance Manual, Cameca Instruments, Inc. Stanford, Connecticut

Series II X-Ray Analyzer Operator's Manuals, Noran Instruments, Inc. (formerly Tracor Northern, Inc.), Middleton, Wisconsin

Instruction Manual, Ladd Vacuum Evaporator, cat. no. 30000, 27 pgs. Ladd Research Industries, Inc., Burlington, Vermont

BA85: A Bence-Albee Oxide Analysis Routine with Mineral Code Capabilities, Sandia Report SAND90-1702

PRZ85: A Subroutined Quantitative Analysis Correction Procedure using the Bastin q(rz) Technique. RFP 3215

SANDIA TASK8: A Subroutined Electron Microprobe Automation system, Sandia Report 2037, 1985

CONFIG8 A Configuration File Generator for SANDIA TASK8, Sandia Report 2035,1985

The following procedure is from the Los Alamos National Laboratory Yucca Mountain Project Quality Assurance Manual in effect April, 1990.

TWS-ESS-DP-122, Preparation of Electron Microprobe Standard Mounts

8.0 RECORDS

8.1. Certified Operators record the following information in their ER notebooks: the ER sample number (cross-referenced to the sample identifiers used during analysis sessions), date, relevant instrument working parameters, any data files generated, records of standards used to calibrate elemental analyses, acceptance criteria, deviations, and additional information appropriate to interpreting results and to reproducing analyses. The Certified Operator will retain all printed output form analytical sessions with the EMP System.

8.2. The floppy disks and/or diskettes assigned to the Certified Operator are temporary storage for analytical data and will be kept in the EMP System room. It will be the Certified Operator's responsibility to edit, archive, and/or delete these files as needed.

8.3. All ER EMP System microanalysis data will be archived in a database on magnetic media.

8.4. The results of gain calibration, and Faraday cup and resolution checks, date, and name of the person performing the calibration and checks will be recorded in the ER EMP System logbook. A sticker will be placed on the Series II X-ray Analyzer console.

8.5. LANL notebooks, logbooks, EMP System data output, and other records are controlled in accordance with the procedures in Section 1.0, General Instructions.

9.0 ATTACHMENTS

N/A

Los Alamos National Laboratory **Environmental Restoration Program** Standard Operating Procedure	No: LANL-ER-SOP-09.03 Rev: 0

Operation of Siemens X-Ray Diffractometer

	(Print Name)	(Signature)	(Date)
Preparer:	David L. Bish	David L. Bish	8/26/91
Quality Review by:	DAVID BROXTON	David Broxton	8/27/91
Technical Review by:	A.W. Laughlin	AW Laughlin	8/27/91
QPPL Approval:	Larry Maassen	Larry Maassen	8/30/91
PM Approval:	Robert W Vocke	Robert W Vocke	8/30/91

Effective Date: 3-16-92

OPERATION OF SIEMENS X-RAY DIFFRACTOMETER

1.0 PURPOSE

The purpose of this procedure is to describe the methods, procedures, and documentation used to obtain X-ray powder diffraction data from the Siemens D- 500 X-ray powder diffractometers.

2.0 SCOPE

2.1 Applicability

This procedure applies to all personnel who are conducting ambient and controlled-temperature or atmosphere X-ray diffraction analysis of any rock or mineral for the Environmental Restoration (ER) program using the Siemens D-500 X-ray powder diffractometers.

2.2 Training

Los Alamos National Laboratory policy requires that all persons using this equipment have completed the Laboratory analytical X-ray safety class within the required time period, and be trained by the machine custodian on the proper operation of the equipment, safety features, and emergency procedures. All personnel using this procedure must document that they have read and understood this procedure, and the seven procedures in Section 1.0, General Instructions.

3.0 DEFINITIONS

Machine Custodian: The person who is in charge of an instrument and is responsible for the maintenance and safety of the instrument. This person's name shall be posted on the front of the diffractometers.

4.0 BACKGROUND AND/OR CAUTIONS

4.1 Principle X-ray diffraction is a method by which investigators can identify the minerals present in a rock and obtain quantitative information on their abundances and physical properties.

4.2 Malfunctions of the equipment are readily apparent. For the diffractometers, one either obtains counts or no counts. Failure of the TTK and ITC4 units during controlled temperature runs is readily apparent by monitoring the sample temperature displayed on the ITC4 controller.

4.3 The diffractometers produce ionizing radiation using high voltage sources. However, the diffractometers are interlocked such that if the panels are all in place, risk to the operator is almost non-existent.

4.4 Only two possibilities (rare) for data corruption exist: 1) loss of X-ray flux; 2) occurrence of noise spike. The first problem can be identified by the lack of any diffracted intensity, i.e., counts = 0. Such data should be discarded. The occurrence of the second possibility can be noted by "peaks" only one 2θ step wide. Such data are generally usable and only need to be discarded when a noise spike overlaps on an important peak.

4.5 During a variable-temperature X-ray run, data shall be rejected if, after a run is completed and the TTK attachment is opened, the sample is found to have fallen or blown (due to vacuum) out of the sample holder.

4.6 The dated entry on the Daily Activity Log (see SOP-01.04), for each X-ray run shall constitute evidence that the procedure has been implemented and satisfactorily accomplished for the X-ray run.

5.0 EQUIPMENT

- Siemens D500 X-Ray Powder Diffractometers
- DIFFRAC5000 - Siemens Commercial X-Ray Data Package
- Anton Paar TTK Temperature Attachment. (This attachment is capable of controlling the sample temperature between liquid nitrogen (- 195.8°C) and ~300°C under a vacuum)
- Oxford Instruments ITC4 Temperature Controller
- Roughing Vacuum Pump

6.0 PROCEDURE

The machine custodian is responsible for both alignment and calibration of the diffractometers and the training of any potential users of the diffractometers. The principal investigator (PI) has the responsibility to assure correct implementation of this procedure for ER work. The PI may delegate performance of the procedure to any properly trained and certified individual.

6.1 Calibration

For Alignment and calibration, see Calibration and Alignment of the Siemens Diffractometers, SOP-09.04. Temperature calibration of the TTK attachment shall be performed at several temperatures, preferably at liquid nitrogen temperature and in boiling water, as outlined in reference D. Calibration of the sample temperature may be performed using an independent temperature measuring device such as the thermocouple probe operated in accordance with TWS-EES-DP-105, Thermal Calibration Procedure or using known melting point(s) of a crystalline phase.

6.2 Control of Samples

6.2.1 Samples will be tracked, stored, shipped, and handled in accordance with the procedure for Sample Identification and Control for Mineralogy-Petrology Studies, (see reference H2), SOP-01.03, Handling, Packaging, and Shipping Samples, and SOP-01.04, Sample Control and Field Documentation. Great care shall be exercised to label all X-ray runs with correct sample name, checking sample output against names on the sample bottles.

6.3 Diffractometer Operation

6.3.1 Turn on diffractometer as outlined in the operating instructions (Ref A).

6.3.2 Insert sample and turn on X-rays either by pressing the shutter-open button or by placing shutter in automatic mode.

6.3.3 The instrument is operated and data analyses conducted using the Siemens software package, DIFFRAC5000. Refer to the DIFFRAC5000 users manual (Ref B).

6.3.4 If the samples are to be X-rayed at variable temperatures using the Anton Paar TTK attachment, the TTK attachment is operated and maintained as outlined in the TTK instruction manual (Ref C), and the Oxford ITC4 temperature controller is operated as outlined in the ITC4 Operators Manual (Ref D)

6.4 System Shut-Down

The diffractometer is shut-down in accordance with the instruction manual (Ref A).

6.5 Data Analysis

6.5.1 The data are regressed and displayed using the Siemens DIFFRAC5000 software package.

6.5.2 Crystalline phases are identified by comparing their patterns with patterns of pure standards, patterns from the JCPDS files (Ref E, F, G), or with calculated patterns.

6.5.3 Quantitative X-ray diffraction analysis is conducted in accordance with SOP-09.03 and TWS-EES-DP-116 (Ref H3).

6.6 Procedural Deviations

Deviations from this procedure shall be fully documented in the Daily Activity Log in SOP-01.04, explaining the deviation and the effects it may have on the resulting work.

7.0 REFERENCES

A. Siemens D500/501 Operating Instructions, C72000-B3463-A42, Siemens Corporation, Cherry Hill, New Jersey.

B. Siemens DIFFRAC5000 User's Manual, Siemens Corporation, Cherry Hill, New Jersey.

C. Anton Paar Instruction Manual for TTK-Temperature Attachment for Low and Medium Temperature, Anton Paar KG., Karntnerstrasse 322, A-8054 Graz/Austria.

D. Oxford Instruments Operating Manual for Model ITC4 Temperature Controller, May 1987 Issue 3, Oxford Instruments Limited, Osney Mead, Oxford OX2 0DX, England.

E. Powder Diffraction File, Search manual, Fink Method, Inorganic, Publication SMF-26 (Joint Committee on Powder Diffraction Standards, Swarthmore, Pennsylvania, 1976, pp. 1017.

F. Mineral Powder Diffraction File, Data Book (Joint Committee on Powder Diffraction Standards, Swarthmore, Pennsylvania, 1986) 1396 pp.

G. VAX-PDF2/CDIF JCPDS Software Program and database on CD-ROM for VAX-VMS systems. Joint Committee on Powder Diffraction Standards, Swarthmore, Pennsylvania.

H. The following procedures are from the Los Alamos National Laboratory Yucca Mountain Project Quality Assurance Manual in effect February, 1989.

H1. TWS-EES-DP-105, Thermal Calibration Procedures.

H2. TWS-EES-DP-101, Sample Identification and Control for Minerology Petrology Studies.

H3. TWS-EES-DP-116: Quantitative X-Ray Diffraction Data Reduction Procedure.

I. LANL-ER-SOPs in Section 1.0, General Instructions.

8.0 RECORDS

8.1 All X-ray runs shall be recorded on the Daily Log, records of which shall include date of run, sample identification, analyst's signature, diffractometer used, and any unusual run conditions.

8.2 A catalog of all computer-automated X-ray runs shall be maintained and periodically updated and stored on magnetic or optical media.

8.3 All raw X-ray data stored on magnetic or optical media shall periodically be backed up onto magnetic tape and stored in a fireproof safe.

8.4 Records that are readily regenerated from the raw data such as hard copy plots and peak search data sheets may be placed in labeled three-ring binders.

9.0 ATTACHMENTS

N/A

Los Alamos National Laboratory **Environmental Restoration Program** Standard Operating Procedure	No: LANL-ER-SOP-09.04 Rev: 0

Calibration and Alignment of The Siemens Diffractometers

	(Print Name)	(Signature)	(Date)
Preparer:	David L. Bish	David L. Bish	8/26/91
Quality Review by:	DAVID BROXTON	David Broxton	8/27/91
Technical Review by:	A.W. Laughlin	A.W. Laughlin	8/27/91
QPPL Approval:	Larry Maassen	Larry Maassen	8/30/91
PM Approval:	Robert W Vocke	Robert W Vocke	8/30/91

Effective Date: 3-12-92

CALIBRATION AND ALIGNMENT OF THE SIEMENS DIFFRACTOMETERS

1.0 PURPOSE

The purpose of this procedure is to describe the methods, procedures, and documentation required to align and calibrate the Siemens D500 X-ray powder diffractometers.

2.0 SCOPE

2.1 Applicability

This procedure applies to Siemens D500 X-ray diffractometers used to obtain analyses for the Environmental Restoration (ER) program. Due to safety considerations, the machine custodian is solely responsible for performing machine alignment. The ER user and the machine custodian performing calibration have the responsibility to adhere to this procedure.

2.2 Training

Only the machine custodian shall perform alignment of the instruments. Other personnel who have the technical training necessary may be certified to use this procedure. Reading and understanding this procedure as well as the six procedures in Section 1.0, General Instructions shall constitute training to this procedure.

3.0 DEFINITIONS

A. Machine Custodian: The person who is in charge of an analytical X-ray instrument and who is responsible for the maintenance and safety of the instrument.

B. Shorting Plug or Key: The plug (θ-2θ machine) or key (θ-θ machine) used to bypass the safety circuits to allow alignment. To be used only by the machine custodian.

C. TTK heating stage: The Anton-Paar heating stage that can be mounted on either the θ-θ or the θ-2 diffractometer.

D. NIST: National Institute of Science and Technology.

4.0 BACKGROUND AND/OR CAUTIONS

Calibration and, if necessary, alignment of the Siemens X-ray diffraction equipment must be performed on a periodic basis in order to assure that all data collected on the instruments yield accurate d-spacings. The calibration described here involves only d-spacings. Calibration may use any well-characterized d-spacing standard that is traceable to NIST, such as their standard reference materials. It is not necessary that the diffractometer have no error in 2θ. Calibration is performed to determine the magnitude and direction of any error in 2θ so that appropriate

calibration curves may be used when obtaining d-spacings. Alignment is performed only when calibration data reveal a significant error in alignment, usually after modification of the instrument (e.g., installation of new X-ray tube, installation of alternate sample holders, installation of the TTK).

Certain aspects of the alignment procedure require that one bypass the interlocks to work on the instrument with the X-ray beam on. The use of extreme caution and safety equipment such as lead-lined gloves is mandatory.

Highly accurate d-spacing measurements are not crucial to qualitative phase identification or quantitative phase analysis. However, it is useful and good laboratory practice to have a well-aligned diffractometer. In general, errors less than 0.02° 2θ are desirable, but errors up to 0.10° 2θ are acceptable in many cases. The Siemens DIFFRAC5000 software package will accept calibration data of virtually any magnitude so that relatively large errors will be corrected. It is recommended that any calibration yielding errors of greater than 0.02° 2θ be followed by alignment to reduce the errors below 0.02° 2θ. If calibration is not performed, calibration data should be documented with an explanation why further alignment was not necessary or practical.

There are few sources for error that would not be readily detected. A potential situation where minor error could occur is when the linear absorption coefficient or transparency of a sample being run is not similar to that of the standard used to calibrate the instrument. In this case, if accurate d-spacings were desired, the instrument should be calibrated with a standard of appropriate linear absorption coefficient or an analytical correction should be performed to correct for transparency effects.

The entry in the Daily Activity Log (see SOP-01.04) and the calibration sticker placed on the instrument shall constitute evidence that the procedure has been implemented and satisfactorily accomplished.

5.0 EQUIPMENT

- NIST SRM 640a or 640b Si Powder d-spacing Standard.
- Granite surface plate or precision flat plate.
- Height Gauge.
- Dial Indicator Gauge.
- Precision Right-Angle Block.
- Assorted Slits.
- Strip Chart Recorder.
- Assorted Screw Drivers and Wrenches.
- Shorting Plug or Key.
- Siemens DIFFRAC5000 software package.
- LCLSQ, lattice parameter refinement program.

6.0 PROCEDURE

Note: Only NIST traceable standards such as NIST SRM 640b shall be used to calibrate or check the calibration of the Siemens X-ray powder diffractometers.

Deviations from this procedure shall be fully documented on Daily Logs explaining the deviation and the effects it may have on the resulting work.

6.1 Calibration of Diffractometers

As required, either by time elapsed since last calibration check or by a change in the instrument or sample holder geometry, the instrument shall be calibrated against a certified standard reference material (SRM), such as NIST SRM 640a or 640b (Si powder), or against a secondary reference standard traceable to an NIST standard.

6.1.1 The calibration standard may be mounted either in a cavity or as a thin film to minimize specimen transparency effects.

6.1.2 The calibration standard shall be examined on the instrument over a 2θ range practical for the instrument and standard. A recommended procedure is to examine NIST SRM 640a or 640b from ~18° 2θ to ~150° 2θ using 0.01-0.02°-2θ steps and counting for at least 1.0 sec per step.

6.1.3 Determine peak positions for all diffraction maxima using the Siemens FIT program in the DIFFRAC5000 software package, typically using the split-Pearson VII profile. The results of the profile refinement may be compared with the certified values for the standard to assess the magnitude of the 2θ error.

6.1.4 Input observed and theoretical peak positions into the Siemens calibration file using the DIFFRAC5000 software. Detailed instructions are in the Siemens DIFFRAC5000 manual (Ref A).

6.2 Alignment of the Diffractometer

If a calibration check reveals significant errors in alignment (2θ errors generally greater than 0.02° 2θ), an alignment of the diffractometer should be performed. If only some aspects of the instrument have been modified, only an abbreviated alignment will be required. For example, if a new X-ray tube has been installed, only the tube height will require alignment. When the TTK stage is installed, both sample height (6.2.3) and θ zero point (6.2.5) must be checked and adjusted if necessary.

6.2.1 Specimen holder pin height. This step is performed only if the specimen stop-screws have been modified. Thus, in practice it is seldom if ever performed. 6.2.1 is not applicable to the TTK stage.

6.2.1.1 Check the three specimen stop-screws on the specimen holder for the same height. The two outer pins should be coplanar with the inner reference pin. (Item 46, Fig. 7, in reference 2.2).

Tools Needed

1) Granite surface plate or precision flat plate
2) Height gauge
3) Dial indicator gauge
4) Precision right-angle block.

6.2.1.2 Set the level of the specimen holder using the bar by the inner stop-screw.

6.2.1.3 Set the dial indicator height using the bar or inner screw.

6.2.1.4 Before adjusting stop-screws, the locking screws should be loosened. There is one for each stop-screw.

6.2.1.5 When the height of the three stop-screws is set, retighten the locking screws.

6.2.2 Install the specimen holder on the specimen carrier using the push rod which is built into the carrier. Use the flat surface of the rod and try to make the holder parallel to the rod. This step is performed only if the specimen holder has been removed from the specimen carrier. This step is not applicable to the TTK stage.

6.2.3 Check the specimen surface (this can be done without shorting plug or key in). The axis of rotation of the goniometer is on the specimen surface when the maximum intensities appear at $\theta = 0^\circ$ (front side) and 180° (back side). Note that the maximum intensities are approximately the same. This step is done only with the θ-2θ diffractometer and only if the specimen height has been modified. In practice, this is seldom if ever performed.

6.2.3.1

Slit positions:	I	II	III	IV
Slit:	1°	1°	---	.018°

(These are final slits - can start with wider slits, particularly #IV.)

6.2.3.2 Install glass alignment slit.

6.2.3.3 Insert an absorber plate into the direct beam to limit counts to below ~40,000 counts/sec. Set tube power to minimum (~7kV and ~3mA).

6.2.3.4 Find the maximum intensities by adjusting θ and 2θ independently and alternately on front ($\theta = 0^\circ$). Record 2θ and full scale counts.

6.2.3.5 Find the maximum intensities as above on back side (θ at 180°). This maximum intensity should be about the same value as the front side (θ = 0°). If intensity is different, move holder up and down - if you can't get it, the three pins are not in the same plane and 6.2.1 should be performed.

6.2.3.6 It is not important at this time that the θ and 2θ counting mechanisms read zero, but note only the 2θ values.

6.2.3.7 Ignore the θ value all together. The 2θ values only need to be to be the same, for θ front and back.

6.2.3.8 Compare the 2θ numbers found on front and back sides. The difference should be no greater than 0.02°. Do a θ-2θ scan on both front and back to insure that you are aligning on the main peak.

6.2.3.9 If the difference is greater than 0.02°, the specimen holder has to be moved closer or farther away from the push rod. If the front 2θ value is larger than the back 2θ value, the holder needs to moved towards the pin, i.e., down.

6.2.3.10 If the intensities (front and back sides) are not within ~10% of each other, then step 6.2.3.8 should be rechecked.

Note: The specimen surface height is set roughly on the TTK stage with the TTK alignment slit. However, the slit is too coarse to allow fine tuning of the specimen height. For the TTK and the θ-θ diffractometer (for which the sample stage cannot be rotated), fine adjustment of the specimen height is done performing multiple data collection runs and lattice parameter refinements using the program LCLSQ. LCLSQ allows refinement of a specimen displacement correction. Iterative data measurement, lattice parameter refinement, and specimen height adjustment will allow the specimen height to be adjusted precisely. Major adjustment should only be required after disassembly of the TTK stage. Adjustment of the specimen surface height on the θ-θ diffractometer should not be performed unless the specimen carrier has been disassembled.

6.2.4 Adjust tube height for maximum intensities when 2θ is reading zero. Use only the 0.018 slit in position IV and the glass slit in the sample position. Use no other slits.

6.2.4.1 Loosen the nut at top of tube slightly with small wrench in the D500 accessory kit. Loosen the allen screw at the lower back of the tube (Item 206 in Fig. 22d, reference B).

6.2.4.2 Move θ to front side.

6.2.4.3 Adjust 2θ off of maximum intensities, slightly toward zero.

6.2.4.4 Adjust tube height to get back toward maximum intensity (Item 215 of Fig. 22e in reference B).

6.2.4.5 Adjust θ so maximum intensity is restored.

6.2.4.6 Repeat above steps until you get zero 2θ with maximum intensity.

6.2.4.7 Tighten the nut and screw loosened in 6.2.4.1 above.

6.2.4.8 You should not have to set the height again unless a new tube is installed.

6.2.4.9 If the Kevex Psi detector is installed, steps 6.2.4.1 through 6.2.4.8 cannot be performed. Instead, tube-height alignment is performed using a high-angle reflection of a NIST standard such as Si. The tube height is incrementally adjusted until the high-angle reflection is located at the correct 2θ value obtained using profile refinement. Turning the allen screw on top of the tube clockwise (from above) lowers the observed peak positions.

6.2.5 With the glass slit in the sample position, adjust θ for zero with maximum intensity by means of the eccentric screw (Item 183 in Fig. 20 of reference B). As in previous 2θ adjustment, move toward zero slowly. Peak the eccentric in small steps until you get to zero. Recheck after adjusting slits (slits 0.1, 3, --, 0.018 in slit positions I, II, III, and IV, respectively). This alignment cannot be performed with the Kevex Psi detector installed, and the scintillation detector must be installed. This step needs to be performed only if the specimen carrier has been removed. This step is difficult with the TTK stage because the alignment slit is so coarse. The recommended procedure with the TTK stage is to optimize the θ zero alignment with the slit and correct for any errors using the calibration procedure.

6.2.6 Adjust slit holder for slit positions I and II. Put in the smallest slits. If there is no intensity change, the slits are properly aligned. Do the same for slit positions III and IV.

6.2.6.1 Insert the following slits into the slit holder:

Slit position:	I	II	III	IV
Slit:	0.1°	3°	---	0.018°

6.2.6.2 Remove the sheet metal shield of the slit holder and, if necessary, the Soller slits.

6.2.6.3 Loosen the locking screws (Item 232 in Fig. 25 of reference B).

6.2.6.4 Reposition the sheet metal shield (radiation protection).

6.2.6.5 Displace the slit holder by means of the two adjusting screws (Item 231 in Fig. 25 of reference B) until the ratemeter or chart recorder indicates maximum intensity. In order to turn one adjusting screw in, it is necessary to loosen the opposite screw because these are pressure screws.

6.2.6.6 Insert smallest (0.1°) slit in position II, and you should get the same intensity or you must readjust.

6.2.6.7 Loosen two bottom screws for slit III and IV holder (allen screws are right behind slit III in white painted metal). Adjust slit holder for III and IV with the smallest slits in positions III and IV.

6.2.7 Run a scan on the glass slit through zero (see Fig. 5, reference C). This step does not apply to the TTK stage.

6.2.7.1 Set up for scan:

Slit position:	I	II	III	IV
Slit:	1°	1°	1°	0.018°

6.2.7.2 Set generator to minimum power (~7kV/3mA for FK60-04 Cu tube), ratemeter to ~$2x10^4$ counts/sec full scale, time constant = ~0.2, absorber in direct beam, diffractometer set to step at 1/5°/min upscale, the chart recorder set to feed at 2 cm/min, have θ and 2θ coupled.

6.2.7.3 Start scan at -999.500° 2θ (scan range is dependent on tube type).

6.2.7.4 This scan must be run automatically on the θ-θ machine, using the same conditions, starting 2θ position, and a 0.01° 2θ step size.

6.2.7.5 A good alignment will fulfill the following conditions:

1) The maximum of the primary beam must be within 0.006° of 0°.
2) The amplitudes of the two side maxima should not differ from one another by more than ~30%.
3) The amplitude of the main maximum should be about three times as high as those of the side maximum.

6.2.8 Optimization of 2θ calibration. This is done using a certified d-spacing standard such as the NIST SRM 640 Si series and compensates for systematic errors such as sample transparency and 2θ offset.

6.2.8.1 Mount the calibration standard as in 6.1.1.

6.2.8.2 With θ and 2θ synchronized, drive to high angles (typically over 100° 2θ) and locate a peak of appreciable intensity (one that can be easily detected). Set the X-ray tube kV and mA to typical operational values (45 kV, 35 mA).

6.2.8.3 Perform a quick automatic scan over the range of the peak and determine the observed peak position using the DIFFRAC5000 FIT program.

6.2.8.4 If the position of maximum intensity is not at the certified value, adjust the peak position by adjusting the tube height as in 6.2.4. When this step is complete, the position of maximum intensity should be at the certified value.

6.2.8.5 Refine the adjustments made in 6.2.5 and 6.2.6.

6.2.8.6 For a quick check of the quality of alignment, one or two high-angle reflections may be measured as in 6.1. After determining that alignment is sufficient, perform complete calibration as in 6.1.

6.3 Optimization and calibration of the solid-state Si detectors.

6.3.1 Perform detector energy calibration as described in Kevex 4911 user's manual (reference D).

6.3.2 Set the detector bias to 500 volts.

6.4 Data Analysis

The Siemens DIFFRAC5000 software package is used to regress all data produced or required by this procedure. The program LCLSQ is used to determine the specimen displacement error when aligning the TTK stage and can also be used to determine a specimen displacement error with the conventional stages on both diffractometers.

7.0 REFERENCES

A. Siemens DIFFRAC5000 User's Manual, Siemens Corporation, Cherry Hill, NJ.

B. Siemens D500/501 Diffractometer Operating Instructions, #C72000-B3476- C42-6, Siemens Corporation, Cherry Hill, NJ.

C. Siemens Application Note #52, The New Siemens Diffractometer, Model D500.

D. Kevex 4911 Single Channel Spectrum Analyzer User's Manual, #7257-4911.

E. LANL-ER-SOPs in Section 1.0, General Instructions.

8.0 RECORDS

All calibration and alignment performed on Siemens diffractometers used for ER shall be documented on Daily Logs. Calibration records shall include date of calibration, standard used,

signature of the person performing calibration, the peak positions observed for the standard and the necessary corrections to 2θ. Alignment records shall include the date of alignment, the procedures performed, and the signature of the machine custodian performing the alignment. A new calibration sticker shall be placed on the front of the diffractometer following each calibration identifying when the instrument was calibrated, when the next calibration is due, and the name of the person who did the calibration.

9.0 ATTACHMENTS

N/A

Los Alamos National Laboratory **Environmental Restoration Program** Standard Operating Procedure	No: LANL-ER-SOP-09.05 Rev: 0

Clay Mineral Separation for X-Ray Diffraction Analysis

	(Print Name)	(Signature)	(Date)
Preparer:	David L. Bish	David L. Bish	8/26/91
Quality Review by:	DAVID BROXTON	David Broxton	8/27/91
Technical Review by:	A.W. Laughlin	A.W. Laughlin	8/27/91
QPPL Approval:	Larry Maassen	Larry Maassen	8/30/91
PM Approval:	Robert W Vocke	Robert W Vocke	8/30/91

Effective Date: 3-16-92

CLAY MINERAL SEPARATION FOR X-RAY DIFFRACTION ANALYSIS

1.0 PURPOSE

The purpose of this procedure is to describe separation of clay minerals from bulk rock samples and preparation of oriented sample mounts of clay minerals for analysis by X-ray diffraction.

2.0 SCOPE

2.1 Applicability

The procedure applies to separation and X-ray diffraction investigation of clay minerals for the Environmental Restoration (ER) program, and the ER certified user has the responsibility to adhere to this procedure when conducting clay mineral separations for the ER program.

2.2 Training

Personnel using this procedure for the ER program must have an understanding of the objectives of this procedure and be trained to use it and the SOPs in Section 1.0, General Instructions. Reading and understanding the procedure shall constitute training to this procedure.

3.0 DEFINITIONS

N/A

4.0 BACKGROUND AND/OR CAUTIONS

This procedure is based on Stokes Law settling of particles in a solution.

The Ultrasonic probe is placed in a sound-dampening box to help protect the hearing of the operator.

The use of de-ionized or distilled water to wash and disaggregate the samples is necessary to ensure that no chemical alteration of the clays occurs due to cation exchange. Thoroughly clean all sample preparation equipment and work areas before use.

Adherence to this procedure results in an acceptable sample for X-ray diffraction analysis. The purity of the individual samples and their size fractions are determined by X-ray diffraction. It is up to the certified person conducting the separation to determine if the clay fractions are of adequate purity for their work and shall be documented on the Daily Activity Log (see SOP-01.04). There are no real potential sources of error since this is a qualitative procedure.

5.0 EQUIPMENT

- Shatterbox (or large ball mill) -- most all acceptable.
- Ultrasonic probe capable of ~200 W.
- Centrifuge capable of 8000 RPM with a Sorvall GSA head.
- Sorvall GSA centrifuge head.
- Sorvall SS-34 centrifuge head (optional).
- Spray Drier (optional).
- No software is used.

6.0 PROCEDURE

6.1 Calibration

Not applicable. Samples are examined for purity using X-ray powder diffraction in accordance with SOP-09.03.

6.2 Samples

Samples will be tracked, handled, shipped, and stored in accordance with the procedure for Sample Identification and Control for Mineralogy-Petrology Studies (Ref A). Great care shall be exercised not to mix or contaminate samples. All subsequent analyses rely on this procedure. Carefully label containers into which the sample separates will be placed. Label side and top of each container so that tops cannot be switched.

6.3 Procedural Deviations

Deviations from this procedure shall be fully documented on the Daily Log by the person conducting the work and shall explain the deviation and the effects it may have on the resulting work.

6.4 Separation Procedure

6.4.1 Obtain approximately a one-to-two-inch slice of drill-core or an equivalent amount of drill cuttings or bulk-rock. If necessary, smaller amounts of sample can also be processed using this procedure.

6.4.2 Rid the sample of surface contamination using one of the following:

- Brisk strokes of a clean, dry bristled brush.
- Rinse with de-ionized or distilled water and dry thoroughly -- preferably at room temperature.

6.4.3 Break the bulk sample down into smaller pieces (less than 0.25 inch in diameter using:

- A mortar and pestle or,
- A mortar and pestle/hydraulic press apparatus.

6.4.4 Powder sample using either a shatterbox or large ball-mill.

6.4.5 Combine the entire powdered sample and mix thoroughly to ensure homogeneity. Place in a bottle properly labeled with the sample identification.

6.4.6 Take approximately 20-30 grams of the powdered sample and suspend it in approximately 500 to 700 ml of deionized or distilled water contained in a large plastic (~1000 ml) beaker. Disaggregate the sample for approximately 10-20 minutes at ~200 W using an ultrasonic probe. Longer times may be used if samples are difficult to disaggregate. Small amounts of sample may be readily separated using this procedure by substituting appropriately scaled glassware.

6.4.7 Remove the beaker containing the suspended sample from the ultrasonic probe enclosure and cover the beaker. Place the beaker on a vibrationally stable surface and allow the sample to settle gravitationally without interruption ideally for a time equal to 47 minutes per cm depth of water. This will allow sedimentation of all particles greater than 2μm diameter. For a typical 14 cm water depth, total settling time should be about 10.9 hours. Overnight settling using a water depth of 14 cm will result in sedimentation of slightly smaller particles, e.g., 15 hours settling will sediment particles >1.75 μm and 20 hours settling will sediment particles >1.5 μm.

6.4.8 Decant or syphon the supernatant from the beaker into large centrifuge tubes, taking care not to disturb the sediment at the bottom of the beaker. The sediment in the beaker may be discarded.

6.4.9 Place the centrifuge tubes in the centrifuge and separate the ~2.0-0.35 μm size fraction from suspension at a centrifugation speed of ~5000 revolutions per minutf ~5 minutes.

Superspeed Angle Rotors: GSA and SS-34; Ref B).

6.4.10 Remove the centrifuge tubes from the centrifuge and decant the supernatant into large receiving centrifuge tubes, taking care not to disturb the sediment (>0.35 µm in diameter) at the base of the tube. Save this sediment fraction if needed.

6.4.11 Place the centrifuge tubes containing the cloudy supernatant in the centrifuge and separate the fine clay fraction (~0.35-0.10 µm in diameter) at a centrifugation speed of ~8000 revolutions per minute for a spin time of 40 to 60 minutes.

6.4.12 Remove the centrifuge tubes from the centrifuge and decant the supernatant into labeled beakers.

6.4.13 Remove the fine clay sediment fraction (~0.35-0.10 µm in diameter) from the base of the centrifuge tubes using a spatula and, if necessary, a small amount of deionized or distilled water. Save in a properly labeled sample bottle.

6.4.14 There are several options for processing the remaining supernatant material from step 6.4.13, (this supernatant contains the <0.10 µm fraction). The options are as follows:

1: If not needed, it may be discarded.

2: Place the beakers on a low-temperature hotplate or warm surface to evaporate/concentrate until it will fit into a labeled sample bottle.

3: It can be further centrifuged using the Sorvall SS-34 head at a speed of ~15000 RPM for ~1 hour to remove some of the remaining clays.

4: It can be run through a spray drier which evaporates the liquid and allows the clay to be collected.

6.5 Preparation of Oriented Mounts for XRD Analysis

6.5.1 Suspend a clay mineral fraction in a small amount (approximately 10 to 20 ml) of deionized water contained in a small beaker.

6.5.2 Thoroughly clean and dry a glass or quartz slide appropriately sized for the diffractometer sample holder being used, and place it on a level, stable, warm surface. The sample number is written with indelible ink on the back of the slide.

6.5.3 Drop the suspended clay sample, using an eye dropper or pipette, onto the slide using only enough sample to cover the slide. Do not overfill the slide and do not add additional suspension after the suspension on the slide has begun to dry to ensure the best orientation of clay particles possible.

6.5.4 Allow the sample to dry undisturbed on the slide.

6.5.5 The sample is now ready for X-ray diffraction analysis (Ref F).

6.6 Clay fractions shall be placed in appropriately labeled sample bottles.

7.0 REFERENCES

Los Alamos National Laboratory Yucca Mountain Project Quality Assurance Manual in Effect January 1990, TWS-EES-DP-101: Sample Identification and Control for Mineralogy-Petrology Studies.

Sorvall Superspeed Angle Rotors, GSA and SS-34 Instruction Manual DuPont Company, Biomedical Products Division, Newtown, CT 06470.

LANL-ER-SOPs in Section 1.0, General Instructions.

LANL-ER-SOP-09.03, Operation of Siemans X-ray Diffractometer.

8.0 RECORDS

8.1 Full records of a clay separation, including full sample name or number, date of separation, and signature of the person separating each sample are to be recorded on Daily Logs.

8.2 All documentation requirements imposed by other procedures, both Yucca Mountain and ER, used during this procedure shall be completed in accordance with the procedures and attached to the Daily Logs.

9.0 ATTACHMENTS

N/A.

Los Alamos National Laboratory **Environmental Restoration Program** Standard Operating Procedure	No: LANL-ER-SOP-09.06 Rev: 0

Zeolite Purification and Separation

	(Print Name)	(Signature)	(Date)
Preparer:	Steve J. Chipera	Steve J Chipera	8/16/91
Quality Review by:	DAVID BROXTON	David Broxton	8/27/91
Technical Review by:	A.W. Laughlin	AW Laughlin	8/27/91
QPPL Approval:	Larry Maassen	Larry Maassen	8/29/91
PM Approval:	Robert W Vocke	Robert W Vocke	8/30/91

Effective Date: 3-16-92

ZEOLITE PURIFICATION AND SEPARATION

1.0 PURPOSE

The purpose of this procedure is to describe the methods, procedures, and documentation used to purify/separate zeolites from zeolite-rich samples by sedimentation.

2.0 SCOPE

2.1 Applicability

This procedure applies to zeolite samples purified/separated for the Environmental Restoration (ER) Program.

2.2 Training

Only those persons certified for this procedure shall perform ER-related zeolite purifications/separations. Reading and understanding this procedure and the procedures in Section 1.0, General Instructions shall constitute training to this procedure.

3.0 DEFINITIONS

N/A

4.0 BACKGROUND AND/OR CAUTIONS

Zeolite-rich samples can be purified or extracted from a sample by means of sedimentation in water. This method relies on the difference in particle sizes and densities of the mineral components in the sample. This method is preferred over other methods due to the low magnetic susceptibilities of the zeolite (magnetic separations) or where one is concerned with potentially altering the chemical composition of the zeolite (heavy-liquid density separations).

Purity of the zeolite fractions may be confirmed by X-ray diffraction analyses. It is up to the certified personnel conducting the separation to decide whether the zeolite has been purified/separated sufficiently for the work to be conducted. This decision shall be documented in the Daily Activity Log, (see SOP-01.01.01, Records), by the certified personnel before conducting further research with the sample.

Known Limitations:

- This technique requires that the initial sample be fairly rich in zeolite.
- Minerals intergrown with the zeolites (such as opal-CT in clinoptilolite) can not be separated.

- Two similar species of zeolites such as mordenite in clinoptilolite do not separate very well.

5.0 EQUIPMENT

- Shatterbox (or large ball mill) -- most all acceptable.

- Ultrasonic probe capable of ~200 W.

The Ultrasonic probe is placed in a sound-dampening box to help protect the hearing of the operator. The use of de-ionized or distilled water is necessary to ensure that no chemical alteration of the zeolites occurs due to cation exchange. Thoroughly clean all sample preparation equipment and work areas before use.

6.0 PROCEDURES

Note: Calibration is not applicable. Samples are examined for purity using X-ray powder diffraction in accordance with SOP-09.04.

6.1 Samples

6.1.1 Samples will be tracked, handled, shipped, and stored in accordance with the procedure for Sample Identification and Control for Mineralogy-Petrology Studies (Ref A, SOP-01.03, Handling, Packaging and Shipping of Samples, and SOP-01.04, Sample Control and Documentation).

6.1.2 Carefully label containers into which the sample separates will be placed. Label sides and top of each container so that tops cannot be switched.

6.2 Separation Procedure

6.2.1 The zeolite-rich sample is first shatterboxed or ball-milled (~1 to 2 minutes) to break the sample down to a particle size that is closer to the grain size of its constituent phases.

6.2.2 ~30 to 60 grams of the zeolite sample are placed in a 1000ml plastic beaker filled with ~700-800ml of deionized water. (Glassware, beakers, and settling times are to be scaled appropriately when working with amounts of sample smaller than 30-60 grams).

6.2.3 Disaggregate the sample for approximately 10 to 15 minutes at ~200 W using an ultrasonic probe. Longer times may be used if samples are difficult to disaggregate.

6.2.4 Place the sample on a vibrationally stable surface without cooling it (the ultrasonic probe generates heat in the suspension) and allow it to settle for 30 to 60 seconds. The sediment is composed of the coarse fraction (>~20mm) which should include much

of the quartz, feldspars, and other mineral impurities, and also any larger clumps of zeolites that were not disaggregated. This fraction may be discarded.

6.2.5 Decant or syphon the supernatant into a second beaker and allow it to rest on a vibrationally stable surface for ~1 hour to settle out the 20-30mm size fraction. This is generally a fairly pure zeolite fraction.

6.2.6 Decant or syphon the supernatant into a third beaker and allow it to rest on a vibrationally stable surface overnight (15-20 hours) to settle out the ~3.0-1.0mm size fraction. This should also be a rather pure zeolite fraction.

6.2.7 The remaining supernatant, although it may have a high concentration of zeolite remaining, generally has a high concentration of smectite. It can be discarded, or further processed to concentrate the smectite for clay mineral analysis using Clay Mineral Separations, SOP-09.06.

6.2.8 The sediments from 6.2.5 and 6.2.6 are dried by placing the beakers with the sediments on a warm surface such as a hotplate set at ~50°C or allowed to air-dry at room temperature.

6.2.9 The dried sediments may be X-rayed to determine their purity in accordance with Operation of Siemens X-Ray Diffraction, SOP-09.04. Steps 6.2.2 to 6.2.7 may be repeated if further purification/separation is desired.

6.3 Procedural Deviations

Deviations from this procedure shall be fully documented in the Daily Activity Field Log of the person conducting the purification/separation explaining the deviation and the effects it may have on the resulting work.

7.0 REFERENCES

Los Alamos National Laboratory Yucca Mountain Project Quality Assurance Manual in effect 1/89, Sample Identification and Control for Mineralogy- Petrology Studies.
LANL-ER-SOPs in Section 1.0, General Instructions
LANL-ER-SOP-09.03, Operation of Siemens X-Ray Diffraction.
LANL-ER-SOP-09.05, Clay Mineral Separation.

8.0 RECORDS

All zeolite-rich samples purified/separated using this procedure shall be documented on Daily Logs including complete sample name or number, date that each sample was processed, and the signature of the person conducting the separation.

All documentation requirements imposed by other procedures, both Environmental Restoration and Yucca Mountain Project, used during this procedure shall be completed in accordance with the procedure.

Separated/purified zeolite fractions shall be placed in appropriately labeled sample bottles.

The notebook entry for a sample shall constitute evidence that the procedure has been implemented and satisfactorily accomplished for that sample.

9.0 ATTACHMENTS

N/A

Los Alamos National Laboratory **Environmental Restoration Program** Standard Operating Procedure	No: LANL-ER-SOP-9.07 Rev: 0

Operating Instructions for International Scientific Instruments Model DS-130 Scanning Electron Microscope and Tracor Northern Series II X-Ray Analyzer

	(Print Name)	(Signature)	(Date)
Prepared by	Marjorie G. Snow	MG Snow	2-3-92
Quality Review by	Larry Maassen	Larry Maassen	2-25-92
Technical Review by	A.W. Laughlin	AW Laughlin	2/7/92
PM Approval	Robert W Vocke	Robert W Vocke	3-4-92
QPPL Approval	Karen L Warthen	Karen L Warthen	3/4/92

Effective Date: 3.16.92

Operating Instructions for International Scientific Instruments Model DS-130 Scanning Electron Microscope and Tracor Northern Series II X-Ray Analyzer

Table of Contents

1.0 PURPOSE 2

2.0 SCOPE 2
- 2.1 Applicability 2
- 2.2 Training 2

3.0 DEFINITIONS AND/OR ACRONYMS 2

4.0 BACKGROUND AND/OR CAUTIONS 3

5.0 EQUIPMENT 3
- 5.1 SEM 3
- 5.2 X-Ray Analyzer 4
- 5.3 Software 4

6.0 PROCEDURE 4
- 6.1 Sample Control and Preparation 4
- 6.2 Sample Identification 4
- 6.3 Implementing Procedure 5
- 6.4 Data Acquisition 5
- 6.5 Logbook 5
- 6.6 Instrument Calibration 5
- 6.7 Documentation of Procedural Deviations 6
- 6.8 Acceptance/Rejection Criteria 6

7.0 REFERENCES 6

8.0 RECORDS 7

9.0 ATTACHMENTS 7

Operating Instructions for International Scientific Instruments Model DS-130 Scanning Electron Microscope and Tracor Northern Series II X-Ray Analyzer

1.0 PURPOSE

This procedure provides instructions for the operation of the International Scientific Instruments (ISI) Model DS-130 scanning electron microscope (SEM) and Tracor Northern (TN) Series II x-ray analyzer.

2.0 SCOPE

2.1 Applicability

This procedure applies to electron microanalysis studies of geologic specimens and other materials documented as Environmental Restoration (ER) program samples using the ISI DS-130 scanning electron microscope and TN Series II x-ray analyzer.

2.2 Training

Training for operators consists of reading and applying this procedure, and the instruction and operator manuals for the ISI Model DS-130 SEM and TN Series II x-ray analyzer. Operators also receive training through hands-on operation of the equipment under the supervision of the machine custodian. Training will be documented in the ISI System logbook and the operator's personnel file. In addition the operator must document that he has read and understands the procedures in Section 1.0, General Instructions.

3.0 DEFINITIONS AND/OR ACRONYMS

A. ISI: International Scientific Instruments, Inc.

B. TN: Tracor Northern (now Noran Instruments, Inc.).

C. SEM: Scanning Electron Microscope.

D. EDS: Energy Dispersive Spectrometer.

E. ISI System: Combined ISI SEM and TN Series II X-Ray Analyzer System.

4.0 BACKGROUND AND/OR CAUTIONS

The ISI System is used to obtain high-magnification images, determine the identities and distributions of elements in samples, provide quantitative elemental analyses, perform complex image analyses, and characterize particulate samples.

The machine custodian is responsible for performing routine maintenance including system software and electronically-stored system back-ups; calibration of magnification and Energy Dispersive Spectrometer (EDS) gain; EDS resolution check; instruction of operators in the use of the system; and certification of operators for this procedure. The machine custodian may delegate responsibilities for the ISI System including maintenance, calibration, resolution check, and instruction to specific operators; delegation will be documented in the ISI System logbook.

The operator determines the acceptability of data produced by implementation of this procedure and is responsible for the proper storage and disposition of hard-copy and magnetic media data records. The operator is responsible for final disposition and/or storage of samples and materials. Operators are responsible for the calibration of semiquantitative and quantitative analytical routines used in their particular data acquisitions.

Normal interior building temperature and humidity are acceptable for the operation of the ISI System. Compressed air in the range of 50 to 80 pounds per square inch (psi) is supplied by the building utilities. Cooling water for the ISI System vacuum pump is supplied by a chilled water system maintained in the range of 40° to 70°F. Ambient air temperature for the ISI System should range between 60° and 80°F. When operating the ISI System in a quantitative mode, operators should take extra precaution to ensure that the instrument maintains calibration when environmental conditions are out of range.

Malfunctions of the ISI System is readily detectable by operators during operation of the instrument.

5.0 EQUIPMENT

5.1 SEM

The ISI DS-130 SEM (purchase date September 1980) is fully described in the Instruction Manual for ISI's Model DS-130 SEM. The electron source was modified (installed March 1987) to be a dual source tungsten or lanthanum hexaboride (LaB6) and is described in the Operation Manual for SEM with LaB6 Filament.

5.2 X-Ray Analyzer

The x-ray analyzer and image analysis system is a TN Series II X-Ray Analyzer (purchase date August 1987). This equipment is described in the Series II X-Ray Analyzer Operator's Manuals.

5.3 Software

The TN Series II software (listed in Section 7.0) is commercially acquired software provided with the system or purchased directly from Tracor Northern and is upgraded directly by Noran Instruments, Inc. (formerly Tracor Northern).

6.0 PROCEDURE

6.1 Sample Control and Preparation

Samples to be examined in the ISI System must be in a form or size that can be inserted into, or attached to, an ISI DS-130 stage mount.

Before being placed in the ISI SEM, a sample may be given an electrically conductive coating (usually carbon or gold). Conductive samples may not require coating. Non-conductive samples may not require coating if examined at low accelerating voltages. The operator will determine what type of conductive coating, if any, is appropriate. Carbon-coating procedures are outlined in the Instruction Manual, Ladd Vacuum Evaporator. Gold-coating procedures are outlined in the Hummer II Operation and Maintenance Manual.

Ion-etching may be used to enhance surface features for examination in the ISI SEM. Ion-etching procedures are outlined in the Instruction Manual. Gatan 600 Series Dual Ion Mill.

Standards under SOP 09.09 (Certification of Standards for Microanalysis) may be used for calibration of quantitative elemental X-ray analysis routines. Operators may use other standards for specific applications but must document the basis for usage of these standards in their ER notebooks.

6.2 Sample Identification

SEM sample stubs or thin sections are marked with an ER control number. If it is not practical to place the entire ER control number on the sample mount, an abbreviated number may be placed on the mount. The abbreviated number, accompanied by the complete ER control number, is recorded in the operator's ER notebook as part of the work description.

6.3 Implementing Procedure

The ISI System is set up and operated according to the instructions contained in the Instructions Manual for ISI's Model DS-130 and TN Series II X-ray Analyzer Operator's Manuals. The manuals are stored in the laboratory near the instruments.

The ISI System is capable of analytical work in the following general areas: elemental qualitative and semi-quantitative analysis using no standards, quantitative elemental analysis using standards, image analysis, particle analysis, elemental mapping, elemental line profiles, and composite analysis of X-ray maps and images. Operators are responsible for determining what procedures are appropriate for their work. Operators are required to list procedures used to produce data in the Daily Activity Log.

6.4 Data Acquisition

Data may consist of either image information or elemental information.

Image and elemental information may be photographed by following the instructions in the Instruction Manual for ISI's Model DS-130 SEM and the Instruction Manual, "Rembrandt" Model 3500F Computer Graphics Film Recorder. Each photograph will be labeled with the sample identification number.

Elemental information may be printed on paper following instructions in the operator's manuals if paper hard copy is desired. Each paper hard copy will be labeled with the sample identification number.

Image and elemental information may be stored on magnetic media for retrieval at a later date.

6.5 Logbook

An operator using the SEM enters the date of use and identification of samples studied in the ISI logbook. Additional information, as appropriate, may include the identification of data files generated. At the operator's discretion, descriptions of work performed or observations are recorded on the Daily Activity Log (SOP-01.04), along with the date and identification of samples.

6.6 Instrument Calibration

The computer-generated micrometer marker on the ISI SEM will be checked annually against National Institute of Science and Technology (NIST) Reference Material 484 and adjusted if appropriate. Tolerance ± 10%. If out of tolerance it

will be the machine custodian's responsibility obtain repair for the instrument so that it will be within the required tolerance. Results are documented in the ISI logbook. The results, date, and name of the person performing the check are recorded in the ISI logbook.

The gain on the TN Series II EDS will be checked annually by following the energy calibration instructions in the Series II X-Ray Analyzer Operator's Manuals using copper energy lines. Tolerance is $\pm$ 20 eV. If out of tolerance it will be the machine custodian's responsibility to calibrate the gain by running the Gain Calibration Program as described in the Tracor Northern Manual.

The resolution of the TN Series II EDS will be checked annually by measuring the full width at half maximum of the K alpha line from manganese. This is a check only for degradation of the detector; no adjustment is made.

6.7 Documentation of Procedural Deviations

Special research needs may require deviations from this procedure. The operator documents any deviations and the reasons that they were necessary in the SEM logbook and Daily Activity Log.

6.8 Acceptance/Rejection Criteria

The ISI DS-130 SEM produces high magnification images. Proper operation of the equipment is evident in the quality of the image produced. Improper operation of the ISI DS-130 SEM, or a sample that is charging, can produce a poor image. operators should consult with the machine custodian if enhanced image quality is required.

Semiquantitative X-ray analytical data can be checked by analyzing standards. Operators must determine the appropriate tolerance.

Quantitative X-ray analytical data must have acceptance limits set by operators. Operators will accept or reject all quantitative data based on analyses of standards.

7.0 REFERENCES

LANL-ER-SOPs in Section 1.0, General Instructions.

Hummer II Operation and Maintenance Manual. Technics. 12 pgs.
Instruction Manual, Gatan 600 Series Dual Ion Mill, 33 pages.
Instruction Manual for ISI Model DS-130 SEM, 132 pgs.
Instruction Manual, "Rembrandt" Model 3500F Computer Graphic Film Recorder, 54 pgs.

Instruction Manual, SEM provided with a LaB6 Filament, 22 pgs.
Ladd Vacuum Evaporator, Instruction Manual for Ladd Vacuum Evaporator, Cat. No. 3000, 1988, 27 pgs.
Series II X-Ray Analyzer Operator's Manual, Tracor Northern.

Software programs

8.0 RECORDS

Operators will record the following information in the ISI Logbooks or on the Daily Activity Log: the ER sample number, date, relevant instrument working parameters (i.e. keV, sample current, working distance, spot size, aperture size), any data files generated, records of standards used to calibrate elemental analyses, and additional information appropriate to interpreting results and to reproducing analyses.

The results of magnification and gain calibrations, resolution check, date, and name of the person performing the calibrations and check will be recorded in the ER SEM System logbook and stickers will be placed on the ISI SEM and TN Series II X-Ray Analyzer consoles.

Handling, shipping, and storage of scientific samples is conducted according to the SOP in Section 1.0, General Instructions. Sample identification for SEM materials is described in Section 6.2.

All deviations from this SOP are to be recorded on the Daily Activity Log and become part of the permanent record.

9.0 ATTACHMENTS

N/A

Los Alamos National Laboratory **Environmental Restoration Program** Standard Operating Procedure	No: LANL-ER-SOP-9.09 Rev: 0

Certification of Standards for Electron Microanalysis

	(Print Name)	(Signature)	(Date)
Prepared by	Marjorie G. Snow	M G Snow	2-3-92
Quality Review by	Larry Maassen	Larry Maassen	20 Feb 92
Technical Review by	A.W. Laughlin	A.W. Laughlin	2/7/92
PM Approval	Robert W Vocke	Robert W Vocke	3-4-92
QPPL Approval	Karen L Warthen	Karen L Warthen	3/4/92

Effective Date: 3-16-92

Certification of Standards for Electron Microanalysis

Table of Contents

1.0 PURPOSE 2

2.0 SCOPE 2
- 2.1 Applicability 2
- 2.2 Training 2

3.0 DEFINITIONS 2

4.0 BACKGROUND AND/OR CAUTIONS 3

5.0 EQUIPMENT 3

6.0 PROCEDURE 3
- 6.1 Purchase or Acquisition of Certified Standards 3
- 6.2 Certification of Other Materials 3
  - 6.2.1 Composition 4
    - 6.2.1.1 EDS 4
    - 6.2.1.2 WDS 4
    - 6.2.1.3 Homogeneity 5
    - 6.2.1.4 Quantitative composition 5
- 6.3 Acceptance/Rejection Criteria 5
- 6.4 Data Acquisition 6
- 6.5 Calibration 6
- 6.6 Deviations 6

7.0 REFERENCES 6

8.0 RECORDS 7

9.0 ATTACHMENTS 8

Certification of Standards for Electron Microanalysis

1.0 PURPOSE

This procedure documents criteria that must be met for the purchase or acquisition of certified microanalysis standards, provides instructions for certifying elemental composition and homogeneity of mineral and synthetic non-certified standards for microanalysis, and provides a list of certified standards.

2.0 SCOPE

2.1 Applicability

This procedure applies to standards used in microanalysis studies of geologic specimens and other materials documented as Environmental Restoration (ER) Program samples.

The machine custodian is responsible for the purchase or acquisition of standards for microanalysis and for keeping the List of Certified Standards up to date. The operator determines the acceptability of data produced by implementation of this procedure and is responsible for the proper storage and disposition of hard-copy and magnetic media data records. The operator is also responsible for final disposition and/or storage of samples and materials and for calibration of analytical routines used in certification procedures.

2.2 Training

The machine custodian is responsible for training operators to this procedure and for documenting operators training. In order to be trained for the use of the microprobe, the operator must first be familiar with this procedure, then hands-on operation of the equipment under the supervision of the machine custodian. The operator must also document that he has read and understood the procedures in Section 1.0, General Instructions, of the ER SOPs.

3.0 DEFINITIONS

A. EMP: Electron Microprobe

B. EDS: Energy Dispersive Spectrometer

C. WDS: Wavelength Dispersive Spectrometer

D. Bence-Albee: An empirical matrix correction program used specifically for oxide minerals. Refer to BA85: A Bence-Albee Oxide Analysis Program with Mineral Code Capabilities.

E. PRZ: A quantitative matrix correction technique based on the distribution of x-rays as a function of depth. Refer to PRZ85: A Subroutined Quantitative Analysis Correction Procedure Using the Bastin j(pZ) Technique.

4.0 BACKGROUND AND/OR CAUTIONS

Quantitative X-ray microanalysis is based on measuring the X-ray intensity of an unknown and comparing it to that of a known reference material, a standard. The most reliable results for unknown samples are obtained when the reference materials are as similar as possible to the unknown sample (e.g., use silicate reference materials when analyzing silicate unknowns, sulfide reference materials when analyzing sulfide unknowns). The requirements for standard reference materials are proper preparation, stability over time, careful analysis by independent methods, and homogeneity at the micrometer scale.

Potential hold-points, calibrations, and environmental conditions are addressed in SOP-09.02, Operating the Microprobe.

Standards must be prepared in accordance with SOP-09.02, Operating the Microprobe, and all standards must be given an electrically conductive carbon coating, as described in the Instruction Manual, Ladd Vacuum Evaporator. Sample identification, control, and management must be in accordance with the SOPs in Section 1.0, General Instructions.

Standards are identified by scribing a four-character mnemonic on the top and bottom rims of the brass standard mount. Because the mounts are repolished periodically, the label on the top rim may not be visible at all times. Standards are stored either in the SEM, the EMP, or in a desiccator box. Unmounted standard materials will be stored in the standards file cabinet.

Environmental conditions acceptable for the operation of the EMP System are described in SOP-09.02.

5.0 EQUIPMENT

All hardware and software used in this procedure are described in detail in SOP-09.02, Operating the Microprobe.

6.0 PROCEDURE

6.1 Purchase or Acquisition of Certified Standards

Standards purchased from the National Institute of Standards and Technology (NIST, formerly NBS) or standards acquired from other analysts, for which the composition and homogeneity have been documented in published technical journals, and the standards have been widely distributed, are Certified Standards.

6.2 Certification of Other Materials

Potential standard materials received from other analysts and not meeting the acceptance criteria will be certified by checking for qualitative chemical composition and then for quantitative chemical composition and homogeneity.

6.2.1 Composition

6.2.1.1 EDS

EDS spectra will be acquired for 300 seconds in at least three spots, on the mineral grain. A large raster will be used and dead-time will be limited to less than 40%. One representative spectrum, with labels, will be stored on disk. One print-out (or plot) of a representative spectrum with labels will be stored in the Standard Certification book.

The sample will be deemed unacceptable for use as a standard if any elements are determined to be present that are not reported in the analysis received with the material or indicated by stoichiometry.

6.2.1.2 WDS

Ten qualitative analyses will be made on each grain accepted for qualitative chemical composition. If the sample is composed of many small grains as many spots as possible will be analyzed.

An analysis file will be set up following SOP-09.02, Operating the Microprobe, and calibrated using Certified Standards, (see Attachment A). If suitable Certified Standards are not available, other standards may be used but the basis for usage must be noted in the Standard Certification notebook.

Any potential sources of uncertainty will be revealed by the inability of the operator to achieve an acceptable calibration. Calibration will be checked by analyzing a standard as an unknown.

Setup parameters for the Electron Microprobe will meet (or better) the following requirements for precision:

- Standard Standard Deviation (SSD) = 0.5%,
- Unknown Standard Deviation (USD) = 0.5%.

Raw data output will be enabled. Setup parameters will be noted in the Standard Certification Notebook if different than listed here and the reason(s) for deviation from the prescribed parameters will be given.

Any potential sources of uncertainty will be revealed by the inability of the operator to achieve an acceptable calibration. Calibration will be checked by analyzing a standard as an unknown. The operator will determine whether the results are acceptable.

A reference measurement using the same settings will be made on a Certified Standard before and after each set of quantitative analyses. Instrument drift for each element to be used for calibration will be 3.0% or less of the greater value of the reference measurements.

6.2.1.3 Homogeneity

Major elements will be checked for homogeneity using the method described by Boyd et al. (1967), and later used by Jarosewich et al. (1981, 1983, 1987). This method calculates a Homogeneity Index, based on the ratio of the observed standard deviation to the standard deviation predicted from counting statistics. A sample is considered to be inhomogeneous if the Index is greater than three (3). Because the Index looses it sensitivity at low peak-to-background ratios, only major elements (greater than 2.0 wt. % oxide) will be measured for homogeneity.

The prospective standard will meet the requirements for homogeneity if the Index does not exceed three (3). The Homogeneity Index for each element in a standard will be listed in the standard certification notebook.

6.2.1.4 Quantitative composition

The range, mean, and standard deviation for each element present in a potential standard will be calculated from the quantitative analyses. Each element will be judged independently and the information will be listed in the Standard Certification Notebook.

6.3 Acceptance/Rejection Criteria

Quantitative X-Ray analytical data must have acceptance limits set by operators. Refer to SOP-09.02, Operating the Microprobe, for general criteria for acceptance. Some potential sources of uncertainty will be revealed by the inability to achieve an acceptable calibration as evidenced by analyzing a certified standard as an unknown and comparing the calculated values to the listed standards values. Operators will accept or reject all quantitative data based on analyses of certified standards.

The sample will be accepted as a Certified Standard if the following criteria are met:

- The Homogeneity Index is not greater than three (3),

- The range of values for each element is within ±0.75% (relative),
- The standard deviation is within ±0.5% (relative) of the mean concentration,
- The mean concentration is within ±0.5% (relative) of the non-certified value.

If any grain in a sample does not meet these criteria the entire mount will be rejected as a Certified Standard and labeled as, "not certified for ER work."

6.4 Data Acquisition

The data collected is elemental information which is printed for hard copy following each analysis. The hard copy (both the computer print-out of the analysis and the printed spectrum) contains the standard identifier. The elemental information is also stored on magnetic media for retrieval at a later date.

6.5 Calibration

All calibrations pertinent to this procedure are described in SOP-09.02.

6.6 Deviations

Special research needs may require deviations from this procedure. The operator documents any deviations in the Standard Certification notebook, or on the Daily Activity Log (SOP-01.04).

7.0 REFERENCES

LANL-ER-SOPs in Section 1.0, General Instructions
LANL-ER-SOP-9.02, Electron Microprobe Operating Procedure
LANL-ER-SOP-9.09, Scanning Electron Microscope Operating Procedure

Boyd, F. R., L. W. Finger, and F. Chayes. 1967. Computer Reduction of Electron Probe Data, Carnegie Institution Yearbook.

Cameca Technical Manual. Option A-21

Chambers, W. F., J. Doyle. 1990. SANDIA TASK8. Version C: A Subroutined Electron Microprobe Automation System, SAND 90-1702.

Chambers, W. F., BA85: A Bence-Albee Oxide Analysis Program with Mineral Code Capabilities. SAND 85-2034.

Doyle, J. H., W. F. Chambers. PRZ85: A Subroutined Quantitative Analysis Correction Procedure Using the Bastin f Technique. Rockwell Rocky Flats Report RFP-3215.

Doyle, J. H. ZAF8: An Improved Quantitative Analysis for the Flextran-Language Systems. Rockwell Rocky Flats Report RFP-3215.

Jarosewich, E., R. Gooley, J. Husler. October 1987. Chromium Augite-A New Microprobe Reference Sample, Geostandards Newsletter, Vol. 11, No. 2.

Jarosewich, E. and I. G. Macintyre. 1983. Carbonate Reference Samples for Electron Microscope and Scanning Electron Microscope Analyses, Journal of Sedimentary Petrology, Vol. 53.

Jarosewich, E., J. A. Nelen, and J. A. Norberg. April 1980. Geostandards Newsletter, vol. 4, No. 1. Reference Samples for Electron Microprobe Analysis.

Ladd Vacuum Evaporator. Instruction Manual. Cat. No. 30000. 27 pages.

Los Alamos National Laboratory Yucca Mountain Project Quality Assurance Manual in effect July 1989. TWS-ESS-DP-122: Preparation of Electron Microprobe Standard Mounts

Tracor Northern (Noran Instruments. Inc.). Series II X-Ray Analyzer Operator's Manual.

SAND 85-2035. 1985. CONFIG8: A Configuration File Generator for SANDIA TASK8.

8.0 RECORDS

Operators will have recorded the following information in the Standard Certification notebook and the Daily Activity Log:

- Standard identification number or label, date, relevant instrument working parameters,
- The Homogeneity Index for each element to be used for calibration purposes, and the range, mean, and standard deviation for each element,
- Data files generated,
- Records of standards used to calibrate quantitative analysis routines,
- Acceptance criteria,
- Deviations from this procedure, and
- Any information appropriate to interpreting results and to reproducing analyses.

All printed output from standard certification sessions with the EMF system will be retained by the machine custodian.

The floppy disks and/or diskettes assigned to the operator are temporary storage for analytical data and will be kept in the EMP room. It will be the operator's responsibility to edit, archive, and/or delete these files as needed.

All ER EMP system microanalysis data will be archived in a database on magnetic media

All other records, such as the Daily Activity Log, will be controlled in accordance with the SOPs in Section 1.0, General Instructions.

9.0 ATTACHMENTS

A. Listing for Certified Standards

LISTING FOR CURRENTLY AVAILABLE CERTIFIED STANDARDS

NIST Certified Standards:

SRM 470		
containing	K-411,	"GL-39"
	K-412,	"GL-40"
SRM 1873		
containing	K-458,	"GL-41"
	K-489,	"GL-42"
SRM 1871		
containing	K-456,	"GL-46"
	K-492,	"GL-47"
	K-523,	"GL-48"

Smithsonian Institution, National Museum of Natural History Certified Standards:

Anorthite, USNM #137041, "F-14"
Anorthoclase, USNM #133868, "F-15"
Apatite, USNM #104021, "APA-3"
Augite, USNM #122142, "CP-14"
Benitoite, USNM #86539, "BEN-4"
Chromite, USNM #117075, "CHR-5"
Fayalite, USNM #85276, "OL-13"
Gahnite, USNM #145883, "GAH-2"
Garnet, USNM #87375, "GAR-8"
Glass, USNM #72854, "GL-44"
Hornblende, USNM #111356, "AMP-5"
Hornblende, USNM #143965, "AMP-6"
Ilmenite, USNM #96189, "ILM-5"
Magnetite, USNM #114887, "MAG-3"
Microcline, USNM #143966, "F-16"
Olivine, USNM #111312/444, "OL-14"
Plagioclase, USNM #115900, "F-17"
Pyrope, USNM # 143968, "GAR-9"
Scapolite, USNM #R6600-1, "SCP-3"
Cr-Augite, NMNH #164905, "CP-15"

Los Alamos National Laboratory **Environmental Restoration Program** Standard Operating Procedure	No: LANL-ER-SOP-10.01 Rev: 0

Screening of PCBs in Soil

	(Print Name)	(Signature)	(Date)
Preparer:	Sandra Wagner	Sandra Wagner	12-23-91
Quality Review by:	Larry Maassen	Larry Maassen	2-5-92
Technical Review by:	Micheline Devaurs	Micheline Devaurs	2/6/92
QPPL Approval:	Karen L Warthen	Karen L Warthen	3/3/92
PM Approval:	Robert W Vocke	Robert W Vocke	3-4-92

Effective Date: 3-16-92

Screening of PCBs in Soil

Table of Contents

1.0 PURPOSE 2

2.0 SCOPE 2
- 2.1 Applicability 2
- 2.2 Training 2

3.0 DEFINITIONS 2

4.0 BACKGROUND AND/OR CAUTIONS 2

5.0 EQUIPMENT 3

6.0 PROCEDURE 3

7.0 REFERENCES 4

8.0 RECORDS 4

9.0 ATTACHMENTS 5

Screening of PCBs in Soil

1.0 PURPOSE

This procedure describes the sampling for polychlorinated biphenyls (PCBs) in soil using the Dexsil® Clor-n-soil™ kit, L2000™ kit or an equivalent, for the Environmental Restoration (ER) Program.

2.0 SCOPE

2.1 Applicability

This method is applicable to all ER personnel sampling for PCBs. These analytical techniques will be used for screening only. Data used to substantiate regulatory compliance will be validated using Environmental Protection Agency approved methods.

2.2 Training

The field team members should be familiar with the objectives of PCB sampling and must document that they have read and understand this procedure and the procedures in Section 1.0, General Instructions.

3.0 DEFINITIONS

A. Clor-n-soil™ kit: A disposable test kit for determining PCB contamination in soil (see Attachment B). The kit works on the principle of chloride determination. Inorganic chlorides contained in PCBs are removed in a filter tube. The kit will determine if PCB concentrations are above or below 50 parts per million.

B. L2000™ kit: A PCB analyzer that provides accurate analysis of PCB concentration in oil by testing for the total amount of chlorine that is present in the sample. The L2000™ reads out directly in parts per million PCB and utilizes three different settings to increase precision for different types of PCBs.

4.0 BACKGROUND AND/OR CAUTIONS

PCB oils were used in air and gas compressor systems as hydraulic, lubricating, mechanical seal oils, and in electrical equipment, such as capacitors. Through several mechanisms, including blow-by, PCBs entered pipeline systems and are distributed in pipelines with hydrocarbon condensate. These PCB-contaminated condensates are known to have contaminated numerous matrices, including:

Drip pits and storage areas
Crankcases and oil reserves
Septic systems and leach fields
Storm and room drains
Oil reclaim systems (on-site and off-site)
Burn and disposal pits
Pipe and interconnects
Air handling and air receivers
Building Sumps
Floor drains
Oil skimmers
Open drainage ways and tile fields
Roadways (from oiling)

This contamination has sometimes resulted in rather random, but frequently predictable distribution of PCBs across a site. Frequently the more widely distributed PCBs are at levels that do not exceed cleanup standards. This must be confirmed by statistically valid sampling and analysis.

Analysis for PCBs is sometimes costly and time consuming with results typically being returned in 2 to 4 weeks from the time of submission to a laboratory. PCB field screening kits are excellent alternatives because they provide simple (can be run by nontechnical field personnel), economical and quick (20 minutes) results in the field. The kits are generally PCB specific, however, Pentachlorophenol, 2,2',5,5'-Tetrabromobiphenyl, Tetradifon, Holowax, and other chlorinated compounds may cause interferences. These kits are most effective when PCBs are the only contaminant.

The hazard associated with using a PCB screening kit is the possibility of coming in contact with metallic sodium, solvents and mercuric nitrate. These compounds are contained in glass ampules. When crushing the ampules, press firmly in the center of the glass ampule ONCE. Do not recrush glass tube. In case of breakage or spillage onto skin or clothing, wash immediately with large amounts of water. None of the solutions in the kit should not be taken internally. Do not expose broken sodium ampule to moisture, sodium will form hydrogen and sodium oxide when moisture is present.

5.0 EQUIPMENT

PCB Screening Kit
Personal Protective equipment (rubber gloves and safety glasses)
Sample Collection Log
Daily Activity Log

6.0 PROCEDURE

A. Gather all necessary materials as specified by the PCB screening kit. Decontaminate soil sampling equipment as necessary per SOP-02.07, General Equipment Decontamination.

B. The following instructions outline the simplified test procedure for the Clor-n-soil PCB screening kits. However, when conducting a field test, carefully follow the procedures for soil screening for PCBs that are provided with each kit used.

1. Make sure that all soil lumps are completely crushed to assure full extraction of PCB.

2. Weigh out 10 grams of soil sample. When weighing out the soil sample, suspend the scale freely by holding on to the metal ring at the top of the scale.

3. Mix the 10 grams of soil with an extraction solvent.

4. Allow the solvent and soil to settle.

5. Put the solvent through a drying column. When pushing the solvent through the drying tube, do not force it through too quickly as some contaminants may pass through.

6. Test the solvent using metallic sodium to strip the chlorine off the PCB molecule.

7. The chlorine is then transferred to the aqueous phase and measured with a precise amount of mercuric nitrate and indicator solution. If there is no organic chlorine present then the mercury turns vivid purple with the indicator; if there are no chlorinates present, then the mercury is tied up and no color results. **NOTE:** Any organic chlorine containing compound will also be detected with the kit and may cause a false positive result.

C. Perform tests only in well ventilated areas.

D. Always wear rubber gloves and safety glasses when performing tests.

E. Record all information pertaining to the type of kit, lot and/or serial number, progress, and results of the field test on the Sample Collection Log and any additional information, deviations or comments on the Daily Activity Log (SOP-1.04).

F. Decontaminate equipment per SOP-2.07. Kits contain organic solvents and should be disposed of along with all other generated waste per SOP-1.06, Management of RFI-Generated Waste.

7.0 REFERENCES

LANL-ER-SOPs in Section 1.0, General Instructions.
LANL-ER-SOP-2.07, General Equipment Decontamination.

8.0 RECORDS

Completed Sample Collection Log.
Completed Daily Activity Log.

9.0 ATTACHMENTS

N/A

Los Alamos National Laboratory **Environmental Restoration Program** Standard Operating Procedure	No: LANL-ER-SOP-11.01 Rev: 0

Measurement of Bulk Density, Dry Density, Water Content, and Porosity in Soil

	(Print Name)	(Signature)	(Date)
Preparer:	Sandra Wagner	Sandra Wagner	11-26-91
Quality Review by:	Terry Morgan	Terry Morgan	12/13/91
Technical Review by:	Clarence J. Duffy	Clarence J. Duffy	12/19/91
QPPL Approval:	Karen L. Foster	Karen L Foster	12/20/91
PM Approval:	Robert W Vocke	Robert W Vocke	3-4-92

Effective Date: 3-16-92

MEASUREMENT OF BULK DENSITY, DRY DENSITY, WATER CONTENT, AND POROSITY IN SOIL

1.0 PURPOSE

This procedure describes two methods for determining four different soil characteristics, bulk density, dry density, water content, and porosity.

2.0 SCOPE

2.1 Applicability

This procedure is applicable for determining density and moisture content in the soil for the Environmental Restoration program. The bulk density may be used in the calibration of in situ stresses for engineering analysis.

2.2 Training

Personnel using this procedure must document that they have both read and understand this procedure and the procedures in Section 1.0, General Instructions.

3.0 DEFINITIONS

Refer to the attached ASTM procedure.

4.0 BACKGROUND AND/OR CAUTIONS

4.1 Bulk Density, Dry Density, and Water Content

Refer to the following attached ASTM and to the Site Health and Safety plan for associated hazards and/or cautions.

4.2 Porosity

Any mass of soil will contain a collection of solid particles with voids in between. In general, these voids are comprised of air and water and the soil is made up of small grains of different minerals. Thus, the total volume of soil (V_t) consists of the volume of solids (V_s) and the volume of voids (V_v). The volume of voids is usually made up of the volume of water (V_w) and the volume of air (V_a). A phase diagram like the one below is useful in the calculation of porosity, density, void ratio, and other soil parameters.[1]

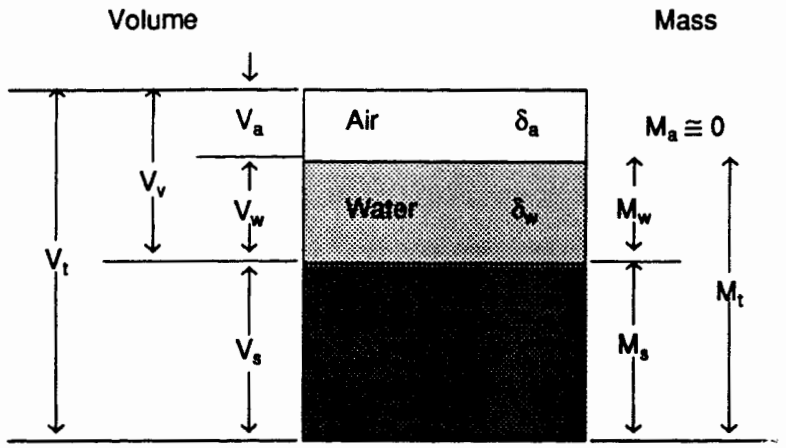

5.0 EQUIPMENT

Refer to the attached ASTM procedure.

6.0 PROCEDURE

6.1 Bulk Density, Dry Density, and Water Content.

Refer to the following attached ASTM.

6.2 Porosity

To find the porosity of soil, perform Method B, Paraffin Wax Method, in the attached ASTM. Calculate the following from the experiment:

M_s = mass of dry peat or soil ≈ mass of solids
M' = mass of moist peat or soil
δ_s = dry density ≈ density of solids
V = total volume of sample

Use the above values to calculate the following values:

$V_s = M_s/\delta_s$, where V_s = volume of solids.

and

$V - V_s = V_v$, where $V_v = V_{air} + V_{water}$ = volume of the voids.

$M' - M_s = M_w$, where M_w = mass of water

$V_w = M_w/\delta_w$, where V_w = volume of water and δ_w = density of water ≅ 1.0 g/c^3

then

$V - V_w - V_s = V_a$, where V_a = volume of air

and

the void ratio = $e = (V_a + V_w)/V_s$

and

porosity = n (in percent) = $100(V_a + V_w)/V$

7.0 REFERENCES

The following procedures are directly associated with this procedure and should be reviewed before field operations:

LANL-ER-SOPs in Section 1.0, General Instructions.

ASTM STANDARD D 4531-86. 1986. Standard Test Method for Bulk Density of Peat and Peat Products.

[1]Holtz, Robert D. and William D. Kovacs, "An Introduction to Geotechnical Engineering." 1981. Englewood Cliffs, NJ.

8.0 RECORDS

A Chain-of-Custody/Request for Analysis form (SOP-01.04) will be maintained and will document the following information:

- Field Sample Number/Identification
- Date and time collected
- Matrix (soil, sludge, core, sediment)
- Analysis requested

The laboratory will report recorded weights of samples, oven time and temperatures, all calculations, and any deviations.

9.0 ATTACHMENTS

A. ASTM STANDARD D 4531-86. 1986. Standard Test Method for Bulk Density of Peat and Peat Products.

ASTM STANDARD D 4531-86, STANDARD TEST METHOD FOR BULK DENSITY OF PEAT AND PEAT PRODUCTS

Designation: D 4531 - 86

Standard Test Methods for Bulk Density of Peat and Peat Products[1]

This standard is issued under the fixed designation D 4531; the number immediately following the designation indicates the year of original adoption or, in the case of revision, the year of last revision. A number in parentheses indicates the year of last reapproval. A superscript epsilon (ε) indicates an editorial change since the last revision or reapproval.

1. Scope

1.1 These test methods cover the determination of the bulk density of both peat in its natural state and peat products (Note 1). These test methods consist of defining a volume of peat and determining the mass of that specific volume. The difference in the respective methods is in the procedures employed to determine the peat volume.

NOTE 1—Test Method D 2978 is used for specifying the volume represented by a quantity of loose processed peat or the volume of a peat bale.

1.2 *Method A*—This method, the core method, covers the determination of the bulk density of an undisturbed core of peat taken with a piston sampler or other suitable core sampler (Sections 6 and 7).

1.3 *Method B*—This method, the paraffin wax method, covers the determination of the bulk density of undisturbed clods or irregular pieces of wet peat and compressed peat products (Sections 8 and 9).

1.4 *This standard may involve hazardous materials, operations, and equipment. This standard does not purport to address all of the safety problems associated with its use. It is the responsibility of whoever uses this standard to consult and establish appropriate safety and health practices and determine the applicability of regulatory limitations prior to use.*

2. Referenced Documents

2.1 *ASTM Standards:*

D 2974 Test Methods for Moisture, Ash, and Organic Matter of Peat and Other Organic Soils[2]

D 2978 Test Method for Volume of Processed Peat Materials[2]

3. Definitions

3.1 *bulk density*, ρ—total mass (solids plus water) per unit of total volume of a peat at a given moisture condition.

3.2 *dry density*, ρ_d— mass of dry organic and mineral matter per unit of total volume of a peat at a given moisture condition.

NOTE 2—In many peat science applications and publications, the term defined here as "dry density" in accordance with common geotechnical engineering usage is referred to as "bulk density". Care is necessary to distinguish which definition is being used when such a term is encountered.

4. Significance and Use

4.1 These test methods provide uniform procedures for determining the bulk density of in situ peat and processed peat products. The bulk density is of use in the calculation of in situ stresses for engineering analysis and in quantifying the amount of material present when considering peat as a resource. In the latter case, it is necessary to consider the moisture condition for which the bulk density was determined; a more useful parameter to consider may well be the dry density, ρ_d.

5. Apparatus

5.1 *Drying Oven*—A thermostatically controlled drying oven maintained at a temperature of 105 ± 5°C.

5.2 *Balances*—Balances sensitive to 0.01 g for samples less than 100 g, sensitive to 0.1 g for samples between 100 g and 1000 g, or sensitive to 1 g for samples over 1000 g.

5.3 *Moisture Content Containers*—Suitable containers for laboratory moisture content determinations.

5.4 *Plastic Sample Bags or Sampling Jars.*

5.5 *Sampler*—Piston sampler or other suitable coring device which will give a reasonably undisturbed cylindrical sample.

NOTE 3—Samples taken with the Macaulay type peat sampler are semicylindrical in shape and relatively undisturbed. They may also be used in this method of determination.

5.6 *Sharp Knife*—An electric knife or barber's razor will be best for laboratory work.

5.7 *Paraffin Wax*, maintained at a temperature between 60 and 70°C, for use in Method B only.

5.8 *Graduated Cylinder*, for use in Method B only.

METHOD A—CORE METHOD

6. Procedure

6.1 Take a representative reasonably undisturbed core of peat with a piston sampler or other coring device.

6.2 With a sharp knife, cut specimens of no less than 50 mm in length from the various layers included in the core. Measure and record the specimen length to the nearest millimetre.

6.3 For samples extruded in the field, place the specimen into a plastic bag or sampling jar and seal to prevent moisture loss.

6.4 Transfer the whole specimen and any free water to a moisture content container in the laboratory and obtain and record the moist mass of peat, M, to the sensitivity of the balance used.

[1] These test methods are under the jurisdiction of ASTM Committee D-18 on Soil and Rock and are the direct responsibility of Subcommittee D18.18 on Peats and Related Materials.

Current edition approved Feb. 24, 1986. Published May 1986.

[2] *Annual Book of ASTM Standards*, Vol 04.08.

6.5 Dry the specimen in an oven at 105°C until a constant mass is reached. Record the mass of dry peat, M_s.

7. Calculation

7.1 The bulk density, ρ, is calculated as follows:

$$\rho = (M/AL)\ \text{g/cm}^3$$

where:
M = mass of the wet peat sample, g,
L = length of sample, cm, and
A = cross-sectional area of sample, as determined from the diameter and form of the sampling device, cm^2.

7.2 The moisture content, w_d, by dry mass of the specimen is calculated as follows for engineering purposes:

$$w_d = (M - M_s)/M_s$$

where:
M_s = mass of the oven dried peat specimen, g.

7.2.1 The moisture content, w_t, may also be expressed in terms of total mass, and is then calculated as follows:

$$w_t = (M - M_s)/M$$

7.2.2 It is of the utmost importance that the approach taken in calculating moisture contents be specified when reporting results or when the term is first used in a report.

7.3 The dry density, ρ_d, is calculated as follows:

$$\rho_d = (M_s/AL)\ \text{g/cm}^3$$

METHOD B—PARAFFIN WAX METHOD

8. Procedure

8.1 Take a representative reasonably undisturbed sample of the peat and trim it into as smooth a shape as possible. Weigh and record the moist mass of the peat sample, M.

8.2 Dip the sample momentarily into melted paraffin maintained at a temperature between 60 and 70°C. Allow the excess paraffin to drain and the coating to dry. Repeat the dipping and drying until a continuous coating is formed.

8.3 Obtain and record the mass of the paraffin coated peat sample, M_{pc}.

8.4 Submerge the coated sample in water in a graduated cylinder and determine the volume of the paraffin coated sample, V_{pc} by observing the volume of water displaced.

8.5 Remove the paraffin coating from the peat sample using a sharp knife.

8.6 Place the remainder of the sample in a moisture content container and record the moist mass of the peat, M' to the accuracy specified for the balance used.

8.7 Dry the sample in an oven at 105°C until a constant mass is reached. Record the mass of dry peat, M_s.

9. Calculation

9.1 To determine the bulk density of the peat, ρ, a correction for the volume of the paraffin coating must be made as follows:

$$\text{Mass of paraffin coating} = M_p = (M_{pc} - M)$$
$$\text{Volume of paraffin coating} = V_p = (M_p/\rho_p)$$

where:
M_{pc} = mass of paraffin coated sample, g
ρ_p = density of paraffin, g/cm^3, and
M = mass of peat sample, g.

$$\text{Volume of peat sample} = V = (V_{pc} - V_p)$$
$$\text{Bulk density, } \rho = (M/V)$$

where:
V_{pc} = volume of paraffin coated sample, cm^3.

9.2 The moisture content, w_d, in this test method must be obtained in terms of dry mass to allow the dry density, ρ_d, to be calculated.

$$w_d = (M' - M_s)/M_s$$

where:
M' = moist mass of peat removed from paraffin, g, and
M_s = mass of dry peat, g.

9.3 The dry density, ρ_d, of the peat is calculated as follows:

$$\rho_d = (\rho/1 + w_d)$$

where:
w_d = moisture content in terms of oven dry mass.

10. Report

10.1 The report shall include the following:

10.1.1 Report the bulk density, ρ, and the dry density, ρ_d to the nearest 0.01 g/cm^3 and also state the method used to determine.

10.1.2 Moisture content, w, to the nearest 0.1 %. It is of the utmost importance that it be stated whether the moisture content is in terms of the dry mass or the total mass of the peat.

11. Precision and Bias

11.1 The variability of soil and resultant inability to determine a true reference value prevent development of a meaningful statement of bias. Data are being sought from users to determine the precision of these test methods.

The American Society for Testing and Materials takes no position respecting the validity of any patent rights asserted in connection with any item mentioned in this standard. Users of this standard are expressly advised that determination of the validity of any such patent rights, and the risk of infringement of such rights, are entirely their own responsibility.

This standard is subject to revision at any time by the responsible technical committee and must be reviewed every five years and if not revised, either reapproved or withdrawn. Your comments are invited either for revision of this standard or for additional standards and should be addressed to ASTM Headquarters. Your comments will receive careful consideration at a meeting of the responsible technical committee, which you may attend. If you feel that your comments have not received a fair hearing you should make your views known to the ASTM Committee on Standards, 1916 Race St., Philadelphia, PA 19103.

Los Alamos National Laboratory **Environmental Restoration Program** **Standard Operating Procedure**	No: LANL-ER-SOP-10.04 Rev: 0

MCA-465/FIDLER INSTRUMENT SYSTEM

	(Print Name)	(Signature)	(Date)
Prepared by	Kellie Soukup	Kellie Soukup	8/12/93
Quality Review by	Dave Bradbury	D Bradbury	8/23/93
Technical Review by	David Waechter	David A. Waechter	8/2/93
PM Approval	Robert W Vocke	Robert W Vocke	9/8/93 ~~8/4/93~~
QPPL Approval	Lawrence A. Souza	L. A. Souza	~~9/9/93~~ 9/9/93

Effective Date: 9/17/93

MCA-465/FIDLER INSTRUMENT SYSTEM

Contents

1.0 PURPOSE 2

2.0 SCOPE 2
- 2.1 Applicability 2
- 2.2 Features 2
- 2.3 Training 3

3.0 NOMENCLATURE AND DEFINITIONS 3

4.0 BACKGROUND AND PRECAUTIONS 4

5.0 EQUIPMENT 5

6.0 PROCEDURES 5
- 6.1 Calibration (Setting the Regions of Interest) 5
- 6.2 Quality Control Chart 7
  - 6.2.1 Materials for Quality Control Chart 7
  - 6.2.2 Operating Procedures 7
- 6.3 Determination of Background Level 8
- 6.4 Field Use 8

7.0 ReferenceS 9

8.0 RECORDS 9

9.0 ATTACHMENTS 9

MCA-465/FIDLER INSTRUMENT SYSTEM

1.0 PURPOSE

The following procedures outline the methods involved in the use of Environmental Protection Group's (EM-8's) Multichannel Analyzer (MCA)-465/Field Instrument for Detecting Low Energy Radiations (FIDLER) instrument system (TSA systems, 1992 a,b).

Specific procedures are given for: 1) Calibration of an Energy Spectrum and setting Regions of Interest; 2) Quality Control Checks; and 3) Field Use.

2.0 SCOPE

Adequate controls shall be established to ensure that only correct and acceptable field measurements will be collected with the FIDLER in support of Environmental Management (EM) operations performed for the Department of Energy.

2.1 Applicability

This instrument is used in soil radiological surveys conducted by the Waste Site Studies (WSS) section of EM-8 at Los Alamos National Laboratory (the Laboratory). The WSS section provides support to the Environmental Surveillance Program, to the Environmental Restoration Program investigations of potential release sites (PRSs), and to the decommissioning and decontamination actions at the Laboratory.

Because the Laboratory routinely characterizes, handles and disposes of soils contaminated with alpha and beta emitting radionuclides (accompanied by gamma and x-ray emanations) the need for a detector that can field monitor soils with potential radioactive contamination is required.

The FIDLER detector is a scintillation detector that, when associated with a MCA, has the ability to measure low energy gamma and x-ray energies that accompany alpha and/or beta decay.

2.2 Features

Features available with this instrument are:

- 256 channel MCA.
- 4 energy spectrum Regions of Interest (ROI) are available.
- 14 memory locations for storing collected spectra are available.

- RS-232 connector and associated software package to allow for memory transfer to Personal Computer (PC) and PC Set-Up.

- Internal 1" x 2" NaI detector for measuring external penetrating background radiation.

2.3 Training

Personnel using this instrument will have been informed of the hazards associated with measuring radioactivity on soils. Both HAZWOPER and Radiation Worker training will be required of personnel using this instrument. Training will be the responsibility of WSS management. The calibration procedure will be conducted only by WSS management or other WSS trained personnel. Training for Quality Control, determination of detection limits, and field use will be required for all users of the FIDLER. Training documentation includes: 1) list of individuals authorized to use the system, 2) date of completed training, 3) Signature sheet indicating review of this standard operating procedure, and 4) Signature sheet indicating completion of in-the-field training and use of the instrument.

3.0 NOMENCLATURE AND DEFINITIONS

Nomenclature

For operating the MCA electronics package as outlined in Section 6.0, the nomenclature used is described below:

- Words in capital italics refer to the menus available on the MCA readout.

- Underlined words refer to options available under the given menu.

- Words in double quotes refer to information that is displayed in a particular option.

- Words enclosed in arrows, e.g., <ENTER> refer to keys on the MCA.

In addition:

- Options are selected using the up and down arrows.

- Option menus are selected by using the right arrow.

- Parameters are stored using the <ENTER> key.

Definitions

BICRON FIDLER - a thin NaI crystal detector assembly that is sensitive to the low energy gamma and x-rays emitted by such long-lived alpha emitting radionuclides as ^{238}Pu, ^{239}Pu, ^{240}Pu and ^{241}Am.

MultiChannel Analyzer (MCA) - a system that collects amplified output signals from a detector and sorts them into the appropriate channels based on the energy of the incident radiation.

NaI (Sodium Iodide) - a hygroscopic, inorganic crystal which emits UV photons (scintillates) as a result of a gamma or x-ray depositing energy in the crystal via a Photoelectric, Compton, or Pair Production interaction. The type of interaction resulting is dependent upon the energy of the incident emanation and the associated cross-section probability for NaI at that energy.

Region of Interest (ROI) - this is the region around a Total Absorption Peak (TAP) of interest.

4.0 BACKGROUND AND PRECAUTIONS

1. The Photomultiplier Tube (PMT) operates at high voltage. Thus, care should be taken when connecting the signal cable to the output and input on the detector.

2. Changes in temperature cause gain shifts with the PMT, thus PMTs are temperature sensitive and rapid temperature changes can damage the NaI crystal. Always allow the FIDLER to warm up or cool down at a rate not exceeding 10°C (18°F) per hour. Sufficient warm-up time is needed before use. Ten minutes should be an adequate warm up time for this instrument.

3. Care must be taken to preclude any damage to the exposed beryllium window of the detector.

4. Personnel using this equipment at PRSs must be informed of the potential radiological hazards that may be encountered during field measurements. Personnel must have received either 24 hour or 40 hour HAZWOPER, and either Radiation Worker I or II training to use this instrument in the field.

5.0 EQUIPMENT

The equipment required for the operation of the NaI gamma detector system includes:

1. BICRON FIDLER Detector
2. TSA Multichannel Analyzer
3. Power Cord
4. Connector Cables
5. Tripod
6. Instrument Stand
7. Check Sources and/or Standards
8. Data Recording Sheet, Tape Recorder, or Personal Computer for the recording of data

6.0 PROCEDURES

6.1 Calibration (Setting the Regions of Interest)

1. Be certain the MCA is turned off before connecting the communications/high voltage cable between the MCA and the detector.
2. Connect the 9-pin cable to the 9-pin external detector plug on the detector unit.
3. Connect the other end of the cable to the 9-pin plug on the MCA.
4. Turn on the MCA. It will go through a self-check before any counting is to be done.
5. Place the source in the source holder. The source element and reference number, activity, and traceability must be recorded and filed with quality assurance records for the FIDLER. These records will accompany data turned into the Records Processing Facility.
6. Place the tripod stand on the source holder.
7. Place the detector unit so that it fits all the way inside the tripod stand. The height of the stand should be adjusted so that the window of the detector is 30 cm (1 foot) from the surface of the source. The serial number for the detector must be recorded.

8. To calibrate the MCA so that the 100 keV energy corresponds to channel number 255, first determine the number of keV per channel using the following:

$$\frac{100\ \text{keV}}{\#\ \text{of channels}} = \frac{100\ \text{keV}}{255} = \frac{0.392\ \text{keV}}{\text{channel}}$$

With this information, the correct channel number for the energy of a check source can now be calculated. All reference information for the check source must be recorded. For example, using ^{241}Am as a check source, and measuring the 59.4 keV x-ray emitted, the channel number for this energy is calculated as follows:

$$59.4\ \text{keV} * \frac{\text{channel}\ \#}{0.392} = \text{channel}\ \#\ 152$$

9. For this particular Total Absorption Peak, move the cursor on the MCA readout so that it is positioned at channel number 152.

10. Hit <mode> to get into the *MODE* menu. Choose the SET-UP mode using the cursor and arrow keys.

11. Select the PARAMETERS option by moving the cursor to this option, and pressing the right arrow key.

12. In the *PARAMETERS* menu, use the arrow keys to select a Live measurement time of "200" (count time of 200 seconds).

13. In the *PARAMETERS* menu, toggle the Time Mode option so that "Live" is displayed.

14. After the necessary parameters have been set, hit the <ENTER> key to store them in the unit. Exit the *PARAMETERS* menu.

15. From the *SET-UP* menu select the CALIBRATE option. The MCA will automatically begin to count the source.

16. Use the arrow keys to move the 59.4 keV peak until it is centered over or under the cursor.

17. Once the peak is centered, hit the <ENT> key to store the calibration factor in the unit.

18. While still in the *SET-UP* menu, move the cursor to select the ROI set-up option.

19. The Lo energy and Hi energy ends of the ROIs are set to the Full Width Half Maximum (FWHM) on either side of the peak of interest by using the

arrow keys, and hitting <ENTER>. The mode key allows you to set other ROIs once one has been established.

20. Select "Lo I" to be the channel number on the left (lower energy) end of the first peak which contains one-half the maximum number of counts in that channel for that total absorption peak of interest. Likewise, select "Hi I" to be the channel number on the right (upper energy) end at the FWHM for that total absorption peak. Record the number of the "lo" and "hi" channels.

    Note: If no one channel is exactly at the FWHM, use the channel with the closest number of counts to, but lower than, the FWHM as a bracketing channel.

21. For the second total absorption peak and ROI select "Lo II" and "Hi II" using the same criterion that was used to select "Lo I" and "Hi I." Record the numbers of the "Lo" and "Hi" channels.

22. Be sure to hit <ENTER> before exiting the ROI set-up menu.

23. The MCA and FIDLER probe are now energy calibrated.

6.2 Quality Control Chart

The daily count rate from an ^{241}Am check source is to be plotted on a running quality control chart. The quality control source check is to be done each day the instrument is used in the field. All reference information on the check source is to be recorded along with the QC data collected on a daily basis.

This chart tracks detector response to a known source as a function of calendar days. It can be used to establish the accuracy of the detector on a daily basis and determine acceptability of the data collected. Once the mean count of the standard source has been determined for a specific time period, the quality control chart can be devised. The quality control chart has 1, 2, or 3 standard deviations as limits.

6.2.1 Materials for Quality Control Chart

1. FIDLER System.

2. Check source (^{241}Am) standard.

3. Quality Control Chart or Record.

6.2.2 Operating Procedures

Place the detector in the tripod stand and place the tripod over the source holder. Place the source in position 1 of the source holder and begin the count of 200s.

At the end of the 200s period, record the number of counts in the regions of interest on the Quality Control Chart. If the total number of counts fall outside the 3rd standard deviation from the mean line, contact the Waste Site Studies instrument owner.

6.3 Determination of Background Level

Background Counting - Prior to use in the field a radiation-soil background check is performed for the detector. At the background location, ten 200s readings are taken and recorded. A mean background count and the standard deviation from the mean are calculated and recorded.

Note: Background measurements should always be performed in a known clean area adjacent to the location of interest in terrain similar to that of the target area.

6.4 Field Use

1. Be sure the instrument has been calibrated and contains charged batteries before going into the field. Check the batteries using the electrometer internal self-check.

2. At the measurement location in the field, set up the tripod and place the detector in the tripod. Place the electrometer as far away from the tripod as possible to prevent shielding of the soil sample to be measured.

3. Turn on the electrometer; after the self check, which verifies that the MCA recognizes an external probe is present, the instrument will be ready to record the field measurements. The instrument will be in the ROI mode after it is turned on. Begin the count by hitting the [START/STOP] key. The count time should be preset to 200 seconds, live time. If not, set to 200 seconds according to procedure on page 6.

4. At the end of the measurement, the total number of counts in the regions of interest will be displayed. Record the count values for the ROIs and the unique sample location. Repeat procedure at the next sample location, recording data at each stop.

5. If pertinent, store the field spectral measurement for a particular location in one of the 14 memory locations available in the electrometer. While in the ROI MODE, hit STORE and select the *Store Data* option in the STORE menu. The measurement will be stored in the first available memory space. Record the memory area number in the logbook and associate it to a sampling location. When making a hard copy of data, the memory area number must be associated to the actual sampling location identifier.

6. The stored spectral data can be downloaded for further analysis from the MCA 465 using an RS-232 cable connected to a serial input port of a PC.

7.0 REFERENCES

TSA Systems Ltd. "Operating and Service Manual - MCA 465" TSA, 1820 Delaware Place, Longmont, CO, 80501, 1992, a.

TSA Systems Ltd. "Operating and Service Manual - External Probe Adaptor" TSA, 1820 Delaware Place, Longmont, CO, 80501, 1992, b.

8.0 RECORDS

The data collected by the instrument can be recorded manually or stored in the memory locations of the electronics package. Information included with the data collection record includes name of personnel performing survey, date of sample reading, detector serial number, source check reference number, and date of last calibration. Stored information can be downloaded to a PC via the available software. Hardcopies of all pertinent information are transferred to the Records Processing Facility by the Operable Unit Project Leader.

9.0 ATTACHMENTS

None

Los Alamos National Laboratory **Environmental Restoration Program** Standard Operating Procedure	No: LANL-ER-SOP-10.05 Rev: 0

Field Analysis Of Total Hydrocarbons Using The Hanby Method

	(Print Name)	(Signature)	(Date)
Prepared by	James W. Heyser	James W. Heyser	2/25/94
Quality Review by	Patricia F. Goulding	Patricia F. Goulding	2/25/94
Technical Review by	Merlin Wheeler	Merlin Wheeler	2/25/94
PM Approval	DAVID McINROY	D. McInroy	3/1/94
QPPL Approval	LAWRENCE A. SOUZA	L.A. Souza	3/1/94

Effective Date: 3/9/94

TABLE OF CONTENTS

1.0 PURPOSE 2
2.0 SCOPE
2.1 Applicability 2
2.2 Training 2
3.0 DEFINITIONS 2
4.0 BACKGROUND AND CAUTIONS 2
5.0 EQUIPMENT 3
6.0 PROCEDURE 3
6.1 Sampling Sites 3
6.2 Decontamination 3
6.3 Soil Samples 3
6.4 Water Samples 4
7.0 REFERENCES 5
8.0 RECORDS 5
9.0 ATTACHMENTS 6
ATTACHMENT A 7

Field Analysis Of Total Hydrocarbons Using The Hanby Method

1.0 PURPOSE

This procedure describes the field analysis of water and soil samples for aromatics and total petroleum hydrocarbons (TPH) using the Hanby Method, which is provided in a patented kit.

2.0 SCOPE

2.1 Applicability

This procedure applies to all personnel responsible for obtaining field measurements of petroleum hydrocarbons and aromatics using the Hanby Method during site characterization work for the Los Alamos National Laboratory (Laboratory) Environmental Restoration (ER) Program.

2.2 Training

The Task or Project Manager is responsible for ensuring that all personnel using this method are properly trained in this procedure. Field team members using this method shall be familiar with the objectives analysis for aromatics and TPH. They must document that they have read and understand this procedure and the kit instructions, seen the training video available with the kit, and read the safety precautions in the Material Safety Data Sheet (MSDS) provided with the kit.

3.0 DEFINITIONS

N/A

4.0 BACKGROUND AND CAUTIONS

The Hanby Method can be used for determining the approximate concentration of soils or liquids. It provides a quick field assay that can be used to locate contaminated areas and estimate the extent of the contamination.

The Hanby Method is an extraction/colorimetric method for measuring concentrations of specific petroleum hydrocarbons and aromatics. This method has been demonstrated to be highly accurate with typical minimum detection limits of 1 ppm for most constituents in soils and 0.1 ppm in water. The amount of color development and shade of color vary depending on the class of compounds analyzed (i.e., aromatics, such as benzene, toluene, and xylene; petroleum products, such as regular and unleaded gasoline, diesel, and kerosene; or polychlorinated biphenyls [PCBs], such as mixtures of Aroclors, a PCB tradename).

The Hanby Method is quantitative only when the class of compounds at the site is known and the results obtained are compared with a color photograph of standards consisting of the same compounds. Even when these conditions are satisfied, care should be exercised when the test results are in the range of 50 to 150 ppm. In this

range, some color will develop in the test sample, but the difference in color between 50 ppm and 150 ppm is slight. TPH concentrations determined by the Hanby Method should not be used, independently, as the basis for final remediation decisions. All results obtained by this method must be verified by a laboratory analysis of other samples.

The Hanby Method uses carbon tetrachloride as the extraction solvent. Carbon tetrachloride is a toxic irritant when inhaled, absorbed, or ingested and is listed as a suspected human carcinogen by the Occupational Safety and Health Administration (OSHA). As a waste, carbon tetrachloride is subject to the Resource Conservation Recovery Act.

Carbon tetrachloride vapors are denser than air so they will sink and accumulate in low spots. Therefore, the following safety precautions must be followed:

- All contaminated materials must be segregated and disposed of as hazardous waste according to the Laboratory ES&H Manual Administrative Requirement (AR) 9-4, Accidental Oil, Chemical and Airborne Releases, and AR 10-3, Hazardous and Mixed Waste.

- An MSDS for carbon tetrachloride should be available at all locations where this test is used in accordance with OSHA regulations.

5.0 EQUIPMENT

Equipment needed for this procedure is listed on the Equipment and Supplies Checklist for the Hanby Method Field Analysis Test Kit (Attachment A).

6.0 PROCEDURE

6.1 Sampling Sites

Refer to the site work plan to locate the sampling sites designated for analysis and the approximate boundaries of the potential release site.

6.2 Decontamination

Decontaminate all reusable sampling equipment before taking the first sample and between sampling intervals in accordance with appropriate SOPs. Gloves and Tyvek™ suits are not to be reused. Beakers containing residues soil samples, and extraction solvent must either be discarded as hazardous solid waste or decontaminated. If the beakers are decontaminated, the decontamination liquid must be disposed of as hazardous waste in accordance with Laboratory AR 10-3 and site-specific Waste Management Plans.

6.3 Soil Samples

Chemical-resistant gloves and safety glasses must be worn while working with the extraction solvent. Work is usually performed outdoors, but it may be performed

indoors in a properly functioning fume hood. Beakers containing extraction solvent should be kept well below the breathing zone, (i.e. at waist level) to reduce exposure to fumes. Minimize exposure time by having all equipment ready before the test is started. The beakers should be partially covered with aluminum foil during extractions to further reduce exposure.

For soil samples, follow the steps below (synopsized from the Hanby instructions):

1. Place a beaker on the balance and tare it. Quickly weigh out a 5 g soil sample (approx. 2 ml) in the beaker.

2. Break the top off the 10 ml ampule of extraction solvent, add it to the sample in the beaker, and agitate sample for 3 minutes. Avoid breathing the fumes.

3. Allow soil to settle and then pour solvent into a screw-top test tube to the 4.2 ml mark. Avoid contact with the solvent.

4. Add one vial of color development catalyst to the test tube. Screw on the cap tightly and shake the vial vigorously for 3 minutes.

5. Compare the hue and intensity of catalyst matrix settled at the bottom of the tube with color photographs of standards provided with the kit to determine the contaminant type and concentration.

6. Record analysis results (i.e., observed concentration and color of catalyst) in the field notebook in ink. Note location, time, and depth from which the sample was collected.

7. Pour excess solvent from the beaker into the liquid waste bottle. The soil and test tube with catalyst should be disposed of as solid hazardous waste. The beakers can be decontaminated as indicated above.

8. Ensure that all reusable equipment is inventoried, decontaminated, and properly stored. Inform the equipment manager of test kit supply needs.

6.4 Water Samples

The same safety precautions listed above for soil samples also apply to the analysis of water samples. Contact with the extraction solvent and vapors is to be avoided.

For water samples, follow the steps below (synopsized from the Hanby instructions):

1. Place a 500 ml water sample in a clean separatory funnel and set the funnel in a ringstand.

2. Add a 5 ml ampule of extraction reagent to the water sample and shake the funnel vigorously for 2 minutes. Periodically release the pressure build-up in the funnel by inverting it and opening the stopcock to vent the

funnel. Take care to avoid spilling liquid from the funnel or breathing vapors expelled during venting.

3. Set the funnel aside for 5 minutes, allowing the extraction phase to separate to the bottom of the funnel.

4. After phase separation, drain the lower extraction level into a screw-top test tube to the 4.2 ml mark, leaving a small amount of extraction solvent in the funnel. Water interferes with color development of the catalyst matrix and must be kept out of the extraction solvent placed in the test tube.

5. Add one vial of color development catalyst to the test tube and shake vigorously for 2 minutes or until a uniform color develops.

6. Compare the hue and intensity of color developed with color photographs of standards in water to determine the contaminant type and concentration.

7. Record analysis results including the color of catalyst matrix in the field notebook in ink. Note location, time, and depth at which sample was gathered.

8. Transfer water sample and remaining extraction phase into liquid waste container for disposal as hazardous waste. The test tube containing the catalyst matrix must similarly be disposed of as hazardous waste.

9. Ensure that all reusable equipment is inventoried, decontaminated, and properly stored. Inform the equipment manager of test kit supply needs.

7.0 REFERENCES

EPA (US Environmental Protection Agency), September 1990. "Field Measurements: Dependable Data When You Need It," EPA 530/UST-90/003, Washington, DC.

HNu-Hanby, "Soil Extraction Method", Instructions included in kit covered by U.S. Patent # 4,992,339, HNu Systems, Inc., Newton, MA

LANL ES&H Manual AR 9-4, "Accidental Oil, Chemical, and Airborne Releases"

LANL ES&H Manual AR 10-3, "Hazardous and Mixed Waste"

LANL-ER-SOP-01.01, R0, "General Instructions for Field Investigations"

8.0 RECORDS

Hanby Method field analysis results will be recorded in the field notebook and/or on appropriate log sheets in accordance with LANL-ER-SOP-01.01. Data to be recorded

should include the date and time of day, sample location (position and depth at site), type of sample, test results, and name of sample collector. Additional information should include comments about the sampling event and conclusions (e.g., need for further evaluation). Identification of any collocated samples, such as those submitted to a laboratory for verification, should also be included. The field team leader is responsible for the generation of all records required within this SOP.

9.0 ATTACHMENTS

Attachment A	Equipment and Supplies Checklist for the Hanby Method Field Analysis Test Kit

ATTACHMENT A

Equipment and Supplies Checklist for the Hanby Method Field Analysis Test Kit

- [ ] Scale (balance or electronic) to accurately weigh 5 gm samples
- [ ] Aluminum foil to cover beakers
- [ ] Labeled containers for liquid and solid hazardous wastes
- [ ] Safety glasses
- [ ] Chemical-resistant gloves
- [ ] Extraction reagent ampules (one for every analysis, 30 supplied in kit)
- [ ] Color development reagent (one for every analysis, 30 supplies in kit)
- [ ] Color photographs of standards (supplied with kit)
- [ ] 10-ml graduated cylinder
- [ ] 50-ml beakers (one for each soil sample)
- [ ] 500-ml separatory funnel (for water samples)
- [ ] Tripod ringstand

Los Alamos National Laboratory **Environmental Restoration Program** **Standard Operating Procedure**	No: LANL-ER-SOP-10.07 Rev: 0

Field Monitoring for Surface and Volume Radioactivity Levels

	(Print Name)	(Signature)	(Date)
Prepared by	JOHN MANN	John Mann	7-21-94
Quality Review by	Patricia F. Goulding	Patricia F. Goulding	9/2/94
Technical Review by	Patrick LaFleur	Patrick LaFleur	7/21/94
PM Approval	JORG JANSEN	J. Jansen	9-14-94
QPPL Approval	LAWRENCE A. SOUZA	L. A. Souza	9/5/94

Effective Date: 9/20/94

FIELD MONITORING FOR SURFACE AND VOLUME RADIOACTIVITY LEVELS

Contents

1.0 PURPOSE 2

2.0 SCOPE 2
- 2.1 Applicability 2
- 2.2 Training 2

3.0 DEFINITIONS AND ACRONYMS 3

4.0 BACKGROUND AND/OR CAUTIONS 3
- 4.1 Determining Radiation Value 3
  - 4.1.1 Surface Contamination 4
  - 4.1.2 Bulk or Volume Contamination 5

5.0 EQUIPMENT 5

6.0 PROCEDURE 5
- 6.1 Determination of Background Radioactivity 5
- 6.2 Calculation of Minimum Detectable Activity 6
- 6.3 Calculation of Decision Amount 6
- 6.4 Determination of Surface Radioactive Contamination 7
- 6.5 Determination of Bulk or Volume Radioactive Contamination 7

7.0 REFERENCES 8

8.0 RECORDS 8

9.0 ATTACHMENTS 8

FIELD MONITORING FOR SURFACE AND VOLUME RADIOACTIVITY LEVELS

1.0 PURPOSE

This procedure describes the process of monitoring potentially contaminated equipment, and materials, including waste, through both field counting of smear survey samples for removable contamination, and direct field surveys for fixed (and/or total) contamination.

2.0 SCOPE

2.1 Applicability

This standard operating procedure (SOP) is applicable to the use of field instruments for determining radioactive contamination in Environmental Restoration (ER) Project wastes. These wastes include those generated during Resource Conservation and Recovery Act (RCRA) facility investigations, RCRA closures, corrective actions, and decontamination and decommissioning. Specifically, this SOP is applicable to the determination of the presence or absence of surface radioactive contamination and the presence (but not the absence) of volume or bulk radioactive contamination. The absence of volume radioactive contamination will be determined using laboratory analyses or equivalent methods or more sensitive field techniques that may be developed in the future. A radiological control technician (RCT) will make the radioactivity determinations described in this SOP.

Field screening may not be appropriate and laboratory analyses not feasible for characterizing certain items, such as the interior of liquid drum samplers or plastic tubing used to convey groundwater during the purging, sampling, or development of monitor wells. These types of items will be characterized for radioactivity as described in the site-specific Waste Management Plan.

2.2 Training

The Field Team Manager (FTM) or equivalent is responsible for ensuring proper implementation of this SOP. The FTM also must ensure that he or she and all RCTs document that they read and understand this SOP, the other applicable SOPs in Section 1.0, General Instructions, of the Los Alamos National Laboratory's (the Laboratory's) ER SOP, the associated Laboratory Administrative Requirements, and the Laboratory's Standards and Procedures.

The RCTs must meet the qualification requirements specified in the Laboratory's Radiological Control (RadCon) Manual, Chapter 6, Part 4, Paragraph 641 through 645. Group ESH-1 RCTs and subcontractors with ESH-1 approval are considered to meet the RadCon Manual requirements. The RCTs must receive on-the-job training prov ided by ESH-1 for making the radioactivity determinations and using the survey instruments/detectors.

Training documentation includes: 1) a list of RCTs authorized by ESH-1 to make the radioactivity determinations; 2) date of completed training; 3) signature sheet indicating each RCT's review of this SOP; and 4) signature sheet certifying completion of the on-the-job training and use of the instruments/detectors.

3.0 DEFINITIONS AND ACRONYMS

1. Background: Radiation from radioactive material other than that resulting from Department of Energy (DOE) operations at the Laboratory. This includes radiation from cosmic rays and from naturally occuring radioactive materials in the earth and building materials including radon (except as a decay product source or special nuclear material); and global fallout as it exists in the environment from the testing of nuclear explosive devices. Background is determined using statistically sound methods of sampling and sample counting (see Section 6.1).

2. Decision Amount (DA): The decision amount is the activity level above which the waste material is considered "radioactive" at an acceptable confidence level.

3. MDA: Minimum detectable activity. A statistical technique developed to establish radioactivity detection capabilities.

4.0 BACKGROUND AND/OR CAUTIONS

4.1 Determining Radiation Value

Deciding whether waste or other material is contaminated with radioactivity requires that radiation detection instruments be used to determine the background count in the vicinity of the waste or other material; this count must then be compared with the count of a sample of the material in question. The sample count must have a certain value above the background count in order to be called "radioactive" with an agreed-upon degree of certainty or confidence that the result is correct. Likewise, if the sample count is less than this certain value, it is called "non-radioactive" (or "at background") with the same degree of confidence.

This certain value is called the minimum detectable activity (MDA). For radioactive waste determinations, the MDA value must be within a factor of 2 to 3 of the DA to satisfy current DOE/AL Waste Moratorium requirements that waste for off-site disposal contain "no radioactivity (other than naturally occuring)."

Currently used field-counting techniques do not have an MDA value that is low enough to make this determination; it must be made in the laboratory where background count rates are low, counting times are long, and the MDA of the method is likewise low. In the field, the only decision that can be made currently (other than by knowledge of process) is that the waste is either radioactive or it is "potentially" radioactive. This decision amount (DA) is the activity level above

which the waste is considered to be radioactive. The DA means that a sample count greater than the DA can be called "radioactive" with the agreed-upon level of confidence, but that counts less than the DA can only be called "potentially radioactive," rather than "non- radioactive." The DA value is typically two or three times less than the MDA.

DOE defines waste as non-radioactive if it contains no measurable increase in radioactivity (at a statistically defined confidence interval) *above background in volume or bulk* resulting from DOE operations at the Laboratory and contains no surface radioactivity above the limits specified in DOE Order 5400.5, II.5.c.(1) and (DOE Draft Order 5820.2B). Therefore, bulk- or volume-contaminated wastes will be classified as radioactive if the wastes are above the Laboratory background levels in the vicinity. Surface contaminated wastes will be classified as radioactive if the wastes are above the surface radioactivity limits in DOE Order 5400.5, II.5.c.(1).

4.1.1 Surface Contamination

DOE allows the release of material and equipment for unrestricted use if the items have surface contamination below specific levels listed in the DOE Order 5400.5, Fig. IV-1, as modified by the U.S. Atomic Energy Commission Regulatory Guide 1.86 for Transuranic Radionuclides (see table in Attachment A). This approach will be applied to potentially surface-contaminated ER Project wastes. The wastes will be classified as radioactive if the wastes are above the DOE criteria. The wastes will be classified as "uncontaminated" and can be considered as non-radioactive if the wastes are below the DOE criteria.

The decision of whether a smear sample or a direct measurement of a surface is contaminated is based on the relative counts obtained on the instrument compared with background and blank sample count rates. The level of radioactivity at which this decision is made has to be below the contamination guidelines shown in Attachment A so that material may be released for unrestricted use with a high degree of confidence that it is not contaminated and, likewise, that if it is contaminated it will not be judged as non-contaminated with the same degree of confidence. This decision level is defined in this procedure as the MDA of each instrument used to measure the type of radiation emitted by the isotopes in question.

To determine if surface contaminated wastes are radioactive, the MDA must be calculated and the counting times adjusted to ensure that the instrument is capable of detecting radioactivity at levels less than the amounts in Attachment A with a high degree of confidence. This determination is based upon measurement with a field instrument having a standard MDA at the 95% confidence interval below the levels required by DOE Order 5400.5.

4.1.2 Bulk or Volume Contamination

To determine if the waste bulk or volume is contaminated with radioactivity, the following information is required:

- The background must be determined either from an uncontaminated location at the measurement site or in the laboratory using an uncontaminated soil or other waste sample taken from the waste site. (See Section 6.1.)

- The DA must be calculated for the radiological field instrument.

The radioactivity status is determined by calculating the DA using the counts measured with a radiation survey meter. The DA is measured at the 95% confidence level as described in Section 6.4 below. If the radioactivity levels are above the DA, the wastes will be classified as radioactive. However, if radioactivity levels are below the DA, wastes potentially contaminated with bulk radioactivity cannot be considered to be non-radioactive. These wastes will be classified as potential radioactive waste, unless the wastes or environmental samples associated with the wastes are analyzed by a laboratory or equivalent method or more sensitive field methods.

Field instruments normally will not have a sufficiently low MDA to make a confident non-radioactive determination for wastes bulk-contaminated with radioactivity. This determination requires analytical methods with greater sensitivity, such as those used by environmental laboratories. In the near future, field methods having greater sensitivity may be developed and used to characterize wastes for bulk radioactive contamination.

5.0 EQUIPMENT

Types of instruments that may be used for this procedure are listed in Attachment B.

6.0 PROCEDURE

6.1 Determination of Background Radioactivity

A. Collect several representative samples of known uncontaminated waste material or soil from the site vicinity and either have them analyzed in the lab or count them in the field, for background samples. The number of samples required depends upon the volume of waste or soil to be measured for radioactivity. This process is used for potentially contaminated bulk waste that can be readily sampled, such as soil.

B. For lab measurements, the samples are appropriately prepared and then counted in radiation counters several times a day for several days until an acceptable confidence level has been attained. This result, the

background count, is used by the laboratory for an MDA determination from which the "radioactive or not" decision on the actual sample is made.

C. Where field methods with adequate MDAs are available, the background samples are counted in the field, and an acceptable MDA is attained, this result is the background count, "B", that is used in the MDA equation. If only screening is to be done, then the background count "B" is used in the DA equation.

6.2 Calculation of Minimum Detectable Activity

A. Determine the MDA of each survey instrument using the following calculation from Brodsky 1991:

$$MDA = \frac{2.71+4.65\sqrt{Bt}}{t \bullet E\left(\frac{A}{100}\right)}$$

where:

MDA = Minimum Detectable Activity in dpm/100cm^2
B = Background (zero activity sample) Count Rate in cpm
t = Sample Counting Time in minutes
E = Detector Efficiency
A = Detector Active Area in cm^2

B. Determine the count rate of a blank (zero-activity) smear or an uncontaminated object similar to the one to be surveyed.

C. Calculate the MDA for each instrument/detector combination using the form in Attachment C.

D. If the instrument MDA is determined to be above the Attachment A value for the activity being measured, then increase the counting time or the detector active area until the MDA is less than the values in Attachment A.

6.3 Calculation of Decision Amount

A. Determine the DA using the following calculation from Brodsky 1991:

$$DA = \frac{2.33\sqrt{Bt}}{t \bullet E\left(\frac{A}{100}\right)}$$

where:

DA = The decision amount in dpm/100cm^2
B = Background (zero activity sample) count rate in cpm
t = Sample counting time in minutes
E = Detector efficiency
A = Detector active area in cm^2

B. Determine the count rate of a zero activity sample by counting a known "clean" waste object or soil sample of the same type as the waste to be measured. Calculate the DA for each instrument using the form in Attachment C.

6.4 Determination of Surface Radioactive Contamination

A. Remove any bulk or volume contamination (i.e., soil, mud) from waste equipment or items, if practical. Refer to ESH-1-02-02, Rev. 1, for details. Calculate the MDA of each survey instrument as described in Section 6.2. If the MDA is less than the values in Attachment A, use the "removable" or "average" values in Attachment A as described below. If the instrument readings are less than the values in Attachment A, classify the wastes as non-radioactive.

B. Determine the removable contamination levels by smearing and following the technique described in Section 7.2 of the Laboratory Procedure ESH-1-02-02. If levels are above the "removable" levels in Attachment A, decontaminate before proceeding with direct measurements.

C. If removable contamination levels are less than the Attachment A amounts, determine the direct contamination levels by following Section 7.1 of the Laboratory Procedure ESH-1-02-02. If the direct contamination levels are greater than the "average" levels in Attachment A, classify the items as radioactive; if the levels are less than the average levels, the item is non-radioactive.

6.5 Determination of Bulk or Volume Radioactive Contamination

A. Once the background has been calculated, calculate the DA (Section 6.3) for each survey instrument.

B. Survey the waste to determine the bulk radioactive contamination levels. If the radioactive levels are above the DA of the instrument, classify the waste as radioactive. If the radioactivity levels are below the DA, classify the waste as potential radioactive until laboratory or equivalent methods or more sensitive field techniques can determine the radioactivity status of the waste.

C. If a technique with an adequate MDA is in place in the field, calculate the MDA (Section 6.2) using the calculated background and proceed to measure the samples for which the radioactive decision is to be made.

7.0 REFERENCES

A. Brodsky, R.G. Gallaghar, "Statistical Considerations in Practical Contamination Monitoring," Radiation Protection Management, Vol. 8, No. 4, 1991.

Los Alamos National Laboratory, "Surveying for Alpha and/or Beta/Gamma Contamination," Environment, Safety and Health Procedure ESH-1-02-02, March 4, 1994.

LANL, "Radiological Control Manual," Chapter 6, Part 4, Paragraph 641 through 645, March 1994.

LANL, "Final RMMA Program Plan," May 20, 1994.

U.S. Atomic Energy Commission, "Termination of Operating Licenses for Nuclear Reactors," Regulatory Guide 1.86, June 1974.

U.S. Department of Energy/Albuquerque, "Performance Objective for the Waste Moratorium," 1993.

U.S. Department of Energy, "Radiation Protection of the Public and the Environment," Order 5400.5, 1988.

U.S. Department of Energy, "Waste Management," Draft Order 5820.2B, 1994.

8.0 RECORDS

During implementation of this SOP, the form for the Determination of DA and MDA (Attachment C) will be completed. This form is found in Attachment C. Copies of the completed form must be sent to the Record Processing Facility, MS M707.

9.0 ATTACHMENTS

Attachment A - Surface Contamination Levels
Attachment B - Typical Field Instruments and Detectors
Attachment C - Determination of DA and MDA

Los Alamos National Laboratory Environmental Restoration Project
SURFACE CONTAMINATION LEVELS

Nuclide	D/M/100cm^2 Remove[1]	Average[2]	Max.
U-nat, ^{235}U, ^{238}U, & assoc. decay products	1,000α	5,000	15,000
TRU, ^{226} and ^{228}Ra, ^{230} and ^{228}Th, ^{231}Pa, ^{227}Ac, ^{125} and ^{129}I	20[3]	100[3]	300[3]
Th-nat, ^{232}Th, ^{90}Sr, ^{223}Ra, ^{224}Ra, ^{232}U, ^{126}, ^{131} and ^{133}I	200α	1,000	3,000
Tritium; Beta-gamma emitters except ^{90}Sr, others above	1,000β–γ	5,000	15,000

1. Removable limit is used for smear samples.
2. Average limit is used for direct measurement of surface contamination.
3. Values taken from NRC Reg Guide 1.86; all other values are from DOE Order 5400.5, Figure IV-1.

Los Alamos National Laboratory Environmental Restoration Project
TYPICAL FIELD INSTRUMENTS AND DETECTORS

Instrument	Typical Background	Typical % Efficiency	
Ludlum Model 2221 Scaler/Ratemeter, used with Ludlum Model 44-9 Pancake G-M for β–γ detection	50-75 cpm	5	^{14}C
		22	^{90}Sr
		19	^{99}Tc
		35	^{32}P
Ludlum Model 2221 Scaler/Ratemeter, used with Ludlum Model 43-5 Alpha Scintillation Detector	0.1-4 cpm	12-14	
Ludlum Model 1000 Scaler, used with Ludlum Model 43-10 Alpha Tray Counter	0.2-0.5 cpm	30-35	

Los Alamos National Laboratory Environmental Restoration
DETERMINATION OF DA AND MDA

Date:_____

Technical Area_____

Operable Unit_____

Calibration procedures must be approved by ESH-4. Calibration results must be within acceptable parameters prior to using a specific instrument to document unrestricted release of materials and equipment. Declaration of waste as "non-radioactive" must be documented with appropriate laboratory or enhanced field analyses.

Instrument Type_____

Model Number_____

Serial Number_____

Calibration Date_____

Surveyor_____
(Print Name) Group

_____
(Signature) Date

Background Count Rate _____cpm (B)
Background (or sample) Counting Time _____min. (t)
Detector Efficiency _____(E)
Detector Active Area _____cm^2 (A)

Calculate minimum detectable Activity (MDA)

$$MDA = \frac{2.71+4.65\sqrt{Bt}}{t \cdot E\left(\frac{A}{100}\right)} = \_\_\_\_\_ \text{dpm/100 cm}^2$$

Calculate Decision Amount (DA)

$$DA = \frac{2.33\sqrt{Bt}}{t \cdot E\left(\frac{A}{100}\right)} = \_\_\_\_\_ \text{dpm/100 cm}^2$$

Calculations Checked by:_____
(Print Name) Group

_____
(Signature) Date

Los Alamos National Laboratory **Environmental Restoration Program** Standard Operating Procedure	No: LANL-ER-SOP-11.02 Rev: 0

Particle Size Distribution of Soil/Rock Samples

	(Print Name)	(Signature)	(Date)
Preparer:	Sandra E. Wagner	Sandra E. Wagner	11-26-91
Quality Review by:	Terry Morgan	Terry Morgan	12/13/91
Technical Review by:	Clarence J. Duffy	Clarence J. Duffy	12/19/91
QPPL Approval:	Karen L. Foster	Karen L. Foster	12/23/91
PM Approval:	Robert W. Vocke	Robert W. Vocke	3-4-92

Effective Date: 3-16-92

PARTICLE SIZE DISTRIBUTION OF SOIL/ROCK SAMPLES

1.0 PURPOSE

This procedure describes methods of determining the size distribution of soil and aggregate samples using sieve analysis for fine and coarse aggregates, and using sedimentation process for particle-size soils of less than 75 µm.

2.0 SCOPE

2.1 Applicability

This procedure will be used by field team members working for the Environmental Restoration Program who wish to determine a soil's particle or aggregate size distribution.

2.2 Training

All field team members using this procedure must document that they have both read and understand this procedure and the procedures in Section 1.0, General Instructions.

3.0 DEFINITIONS

There are no unique definitions in this procedure.

4.0 BACKGROUND AND/OR CAUTIONS

Refer to the following attached ASTMs and to the Site Health and Safety plan for hazards and/or cautions.

5.0 EQUIPMENT

Refer to the following attached ASTMs.

6.0 PROCEDURE

Two ASTM procedures are included: In general Method C 136-84a (Attachment A) can be used for material that is larger than a No. 200 sieve (75-µm), and Method D422-63 (Attachment B) should be used for material finer than the 75 µm sieve. Refer to the ASTM methods for exact descriptions and specifications.

Refer to the following attached ASTMs for instructions.

7.0 REFERENCES

The following procedures are directly associated with this procedure and should be reviewed before field operations:

ASTM STANDARD C 136-84a. 1984. Standard Method for Sieve Analysis of Fine and Coarse Aggregates.

ASTM STANDARD D 422-63. 1963. Standard Method for Particle-Size Analysis of Soils.

LANL-ER-SOPs in Section 1.0, General Instructions.

8.0 RECORDS

A Chain-of-Custody/Request for Analysis form (SOP-01.04) will be maintained and will document the following information:

- Field Sample Number/Identification
- Date and time collected
- Matrix (soil, sludge, core, sediment)
- Analysis requested, if applicable

The laboratory will report the following:

- Test method used
- All calculations and results
- Any deviations, if applicable

9.0 ATTACHMENTS

A. ASTM STANDARD C 136-84a. 1984. Standard Method for Sieve Analysis of Fine and Coarse Aggregates.

B. ASTM STANDARD D 422-63. 1963. Standard Method for Particle-Size Analysis of Soils.

ASTM STANDARD C 136-84a STANDARD METHOD FOR SIEVE ANALYSIS OF FINE AND COARSE AGGREGATES

Designation: C 136 - 84a

Standard Method for Sieve Analysis of Fine and Coarse Aggregates[1]

This standard is issued under the fixed designation C 136; the number immediately following the designation indicates the year of original adoption or, in the case of revision, the year of last revision. A number in parentheses indicates the year of last reapproval. A superscript epsilon (ε) indicates an editorial change since the last revision or reapproval.

This method has been approved for use by agencies of the Department of Defense and for listing in the DoD Index of Specifications and Standards.

1. Scope

1.1 This method covers the determination of the particle size distribution of fine and coarse aggregates by sieving.

1.2 Some specifications for aggregates which reference this method contain grading requirements including both coarse and fine fractions. Instructions are included for sieve analysis of such aggregates.

1.3 The values stated in acceptable metric units (SI units and units specifically approved in ASTM E 380 for use with SI units) are to be regarded as the standard. The values in parentheses are provided for information purposes only.

1.4 *This standard may involve hazardous materials, operations, and equipment. This standard does not purport to address all of the safety problems associated with its use. It is the responsibility of whoever uses this standard to consult and establish appropriate safety and health practices and determine the applicability of regulatory limitations prior to use.*

2. Referenced Documents

2.1 *ASTM Standards:*

C 117 Test Method for Materials Finer Than 75-µm (No. 200) Sieve in Mineral Aggregates by Washing[2]

C 670 Practice for Preparing Precision and Bias Statements for Test Methods for Construction Materials[2]

C 702 Practice for Reducing Field Samples of Aggregate to Testing Size[3]

D 75 Practice for Sampling Aggregates[2]

E 11 Specification for Wire-Cloth Sieves for Testing Purposes[2,3]

E 380 Metric Practice[4]

2.2 *AASHTO Standard:*

AASHTO No. T 27 Sieve Analysis of Fine and Coarse Aggregates[6]

3. Summary of Method

3.1 A weighed sample of dry aggregate is separated through a series of sieves of progressively smaller openings for determination of particle size distribution.

4. Significance and Use

4.1 This method is used primarily to determine the grading of materials proposed for use as aggregates or being used as aggregates. The results are used to determine compliance of the particle size distribution with applicable specification requirements and to provide necessary data for control of the production of various aggregate products and mixtures containing aggregates. The data may also be useful in developing relationships concerning porosity and packing.

4.2 Accurate determination of material finer than the 75-µm (No. 200) sieve cannot be achieved by use of this method alone. Test Method C 117 for material finer than 75-µm sieve by washing should be employed.

5. Apparatus

5.1 *Balances*—Balances or scales used in testing fine and coarse aggregate shall have readability and accuracy as follows:

5.1.1 For fine aggregate, readable to 0.1 g and accurate to 0.1 g or 0.1 % of the test load, whichever is greater, at any point within the range of use.

5.1.2 For coarse aggregate, or mixtures of fine and coarse aggregate, readable and accurate to 0.5 g or 0.1 % of the test load, whichever is greater, at any point within the range of use.

5.2 *Sieves*—The sieves shall be mounted on substantial frames constructed in a manner that will prevent loss of material during sieving. The sieves shall conform to Specification E 11. Sieves with openings larger than 125 mm (5 in.) shall have a permissible variation in average opening of ±2 % and shall have a nominal wire diameter of 8.0 mm (5/16 in.) or larger.

NOTE 1—It is recommended that sieves mounted in frames larger than standard 203-mm (8 in.) diameter frames be used for testing coarse aggregate.

5.3 *Mechanical Sieve Shaker*—A mechanical sieve shaker, if used, shall impart a vertical, or lateral and vertical, motion to the sieve, causing the particles thereon to bounce and turn so as to present different orientations to the sieving surface. The sieving action shall be such that the criterion for adequacy of sieving described in 7.4 is met in a reasonable time period.

NOTE 2—Use of a mechanical sieve shaker is recommended when the size of the sample is 20 kg or greater, and may be used for smaller samples, including fine aggregate. Excessive time (more than approximately 10 min) to achieve adequate sieving may result in degradation of the sample. The same mechanical sieve shaker may not be practical for

[1] This method is under the jurisdiction of ASTM Committee C-9 on Concrete and Concrete Aggregates and is the direct responsibility of Subcommittee C09.03.05 on Methods of Testing and Specifications for Physical Characteristics of Concrete Aggregates.

Current edition approved Oct. 26, 1984. Published December 1984. Originally published as C 136 - 38 T. Last previous edition C 136 - 83.

[2] *Annual Book of ASTM Standards*, Vols 04.02 and 04.03.

[3] *Annual Book of ASTM Standards*, Vol 04.02.

[4] *Annual Book of ASTM Standards*, Vol 14.02. Excerpts in all volumes.

[5] *Annual Book of ASTM Standards*, Vol 14.02.

[6] Available from American Association of State Highway and Transportation Officials, 444 North Capitol St. N.W., Suite 225, Washington, DC 20001.

al sizes of samples, since the large sieving area needed for practical sieving of a large nominal size coarse aggregate very likely could result in loss of a portion of the sample if used for a small sample of coarse aggregate or fine aggregate.

5.4 *Oven*—An oven of appropriate size capable of maintaining a uniform temperature of 110 ± 5°C (230 ± 9°F).

6. Sampling

6.1 Sample the aggregate in accordance with Practice D 75. The weight of the field sample shall be the weight shown in Practice D 75 or four times the weight required in 6.4 and 6.5 (except as modified in 6.6), whichever is greater.

6.2 Thoroughly mix the sample and reduce it to an amount suitable for testing using the applicable procedures described in Methods C 702. The sample for test shall be approximately of the weight desired when dry and shall be the end result of the reduction. Reduction to an exact predetermined weight shall not be permitted.

NOTE 3—Where sieve analysis, including determination of material finer than the 75-µm sieve, is the only testing proposed, the size of the sample may be reduced in the field to avoid shipping excessive quantities of extra material to the laboratory.

6.3 *Fine Aggregate*—The test sample of fine aggregate shall weigh, after drying, approximately the following amount:

Aggregate with at least 95 % passing a 2.36-mm (No. 8) sieve	100 g
Aggregate with at least 85 % passing a 4.75-mm (No. 4) sieve and more than 5 % retained on a 2.36-mm (No. 8) sieve	500 g

6.4 *Coarse Aggregate*—The weight of the test sample of coarse aggregate shall conform with the following:

Nominal Maximum Size, Square Openings, mm (in.)	Minimum Weight of Test Sample, kg (lb)
9.5 (⅜)	1 (2)
12.5 (½)	2 (4)
19.0 (¾)	5 (11)
25.0 (1)	10 (22)
37.5 (1½)	15 (33)
50 (2)	20 (44)
63 (2½)	35 (77)
75 (3)	60 (130)
90 (3½)	100 (220)
100 (4)	150 (330)
112 (4½)	200 (440)
125 (5)	300 (660)
150 (6)	500 (1100)

6.5 *Coarse and Fine Aggregate Mixtures*—The weight of the test sample of coarse and fine aggregate mixtures shall be the same as for coarse aggregate in 6.4.

6.6 The size of sample required for aggregates with large nominal maximum size is such as to preclude testing except with large mechanical sieve shakers. However, the intent of this method will be satisfied for samples of aggregate larger than 50 mm nominal maximum size if a smaller weight of sample is used, provided that the criterion for acceptance or rejection of the material is based on the average of results of several samples, such that the sample size used times the number of samples averaged equals the minimum weight of sample shown in 6.4.

6.7 In the event that the amount of material finer than the 75-µm (No. 200) sieve is to be determined by Test Method C 117, proceed as follows:

6.7.1 For aggregates with a nominal maximum size of 12.5 mm (1/2 in.) or less, use the same test sample for testing by Test Method C 117 and this method. First test the sample in accordance with Test Method C 117 through the final drying operation, then dry sieve the sample as stipulated in 7.2 through 7.7 of this method.

6.7.2 For aggregates with a nominal maximum size greater than 12.5 mm (1/2 in.), a single test sample may be used as described in 6.7.1, or separate test samples may be used for Test Method C 117 and this method.

6.7.3 Where the specifications require determination of the total amount of material finer than the 75-µm sieve by washing and dry sieving, use the procedure described in 6.7.1.

7. Procedure

7.1 Dry the sample to constant weight at a temperature of 110 ± 5°C (230 ± 9°F).

NOTE 4—For control purposes, particularly where rapid results are desired, it is generally not necessary to dry coarse aggregate for the sieve analysis test. The results are little affected by the moisture content unless: (*1*) the nominal maximum size is smaller than about 12.5 mm (½ in.); (*2*) the coarse aggregate contains appreciable material finer than 4.75 mm (No. 4); or (*3*) the coarse aggregate is highly absorptive (a lightweight aggregate, for example). Also, samples may be dried at the higher temperatures associated with the use of hot plates without affecting results, provided steam escapes without generating pressures sufficient to fracture the particles, and temperatures are not so great as to cause chemical breakdown of the aggregate.

7.2 Suitable sieve sizes shall be selected to furnish the information required by the specifications covering the material to be tested. The use of additional sieves may be desirable to provide other information, such as fineness modulus, or to regulate the amount of material on a sieve. Nest the sieves in order of decreasing size of opening from top to bottom and place the sample on the top sieve. Agitate the sieves by hand or by mechanical apparatus for a sufficient period, established by trial or checked by measurement on the actual test sample, to meet the criterion for adequacy or sieving described in 7.4.

7.3 Limit the quantity of material on a given sieve so that all particles have opportunity to reach sieve openings a number of times during the sieving operation. For sieves with openings smaller than 4.75-mm (No. 4), the weight retained on any sieve at the completion of the sieving operation shall not exceed 6 kg/m^2 (4 g/in.^{2}) of sieving surface. For sieves with openings 4.75 mm (No. 4) and larger, the weight in kg/m^2 of sieving surface shall not exceed the product of 2.5 × (sieve opening in mm). In no case shall the weight be so great as to cause permanent deformation of the sieve cloth.

NOTE 5—The 6 kg/m^2 amounts to 194 g for the usual 203-mm (8 in.) diameter sieve. The amount of material retained on a sieve may be regulated by (*1*) the introduction of a sieve with larger openings immediately above the given sieve or (*2*) testing the sample in a number of increments.

7.4 Continue sieving for a sufficient period and in such manner that, after completion, not more than 1 weight % of the residue on any individual sieve will pass that sieve during 1 min of continuous hand sieving performed as follows: Hold the individual sieve, provided with a snug-fitting pan and cover, in a slightly inclined position in one hand. Strike the side of the sieve sharply and with an upward motion against the heel of the other hand at the rate of about 150

times per minute, turn the sieve about one sixth of a revolution at intervals of about 25 strokes. In determining sufficiency of sieving for sizes larger than the 4.75-mm (No. 4) sieve, limit the material on the sieve to a single layer of particles. If the size of the mounted testing sieves makes the described sieving motion impractical, use 203-mm (8 in.) diameter sieves to verify the sufficiency of sieving.

7.5 In the case of coarse and fine aggregate mixtures, the portion of the sample finer than the 4.75-mm (No. 4) sieve may be distributed among two or more sets of sieves to prevent overloading of individual sieves.

7.5.1 Alternatively, the portion finer than the 4.75-mm (No. 4) sieve may be reduced in size using a mechanical splitter according to Methods C 702. If this procedure is followed, compute the weight of each size increment of the original sample as follows:

$$A = \frac{W_1}{W_2} \times B$$

where:

A = weight of size increment on total sample basis,
W_1 = weight of fraction finer than 4.75-mm (No. 4) sieve in total sample,
W_2 = weight of reduced portion of material finer than 4.75-mm (No. 4) sieve actually sieved, and
B = weight of size increment in reduced portion sieved.

7.6 Unless a mechanical sieve shaker is used, hand sieve particles larger than 75 mm (3 in.) by determining the smallest sieve opening through which each particle will pass. Start the test on the smallest sieve to be used. Rotate the particles, if necessary, in order to determine whether they will pass through a particular opening; however, do not force particles to pass through an opening.

7.7 Determine the weight of each size increment by weighing on a scale or balance conforming to the requirements specified in 5.1 to the nearest 0.1 % of the total original dry sample weight. The total weight of the material after sieving should check closely with original weight of sample placed on the sieves. If the amounts differ by more than 0.3 %, based on the original dry sample weight, the results should not be used for acceptance purposes.

7.8 If the sample has previously been tested by Test Method C 117, add the weight finer than the 75-µm (No. 200) sieve determined by that method to the weight passing the 75-µm (No. 200) sieve by dry sieving of the same sample in this method.

8. Calculation

8.1 Calculate percentages passing, total percentages retained, or percentages in various size fractions to the nearest 0.1 % on the basis of the total weight of the initial dry sample. If the same test sample was first tested by Test Method C 117, include the weight of material finer than the 75-µm (No. 200) size by washing in the sieve analysis calculation; and use the total dry sample weight prior to washing in Test Method C 117 as the basis for calculating all the percentages.

8.2 Calculate the fineness modulus, when required, by adding the total percentages of material in the sample that is coarser than each of the following sieves (cumulative percentages retained), and dividing the sum by 100: 150-µm (No. 100), 300-µm (No. 50), 600-µm (No. 30), 1.18-mm (No. 16), 2.36-mm (No. 8), 4.75-mm (No. 4), 9.5-mm (3/8-in.), 19.0-mm (3/4-in.), 37.5-mm (1½-in.), and larger, increasing in the ratio of 2 to 1.

9. Report

9.1 Depending upon the form of the specifications for use of the material under test, the report shall include the following:

9.1.1 Total percentage of material passing each sieve, or

9.1.2 Total percentage of material retained on each sieve, or

9.1.3 Percentage of material retained between consecutive sieves.

9.2 Report percentages to the nearest whole number, except if the percentage passing the 75-µm (No. 200) sieve is less than 10 %, it shall be reported to the nearest 0.1 %.

9.3 Report the fineness modulus, when required, to the nearest 0.01.

10. Precision

10.1 The estimates of precision of this method listed in Table 1 are based on results from the AASHTO Materials Reference Laboratory Reference Sample Program, with testing conducted by this method and AASHTO Method T 27. While there are differences in the minimum weight of the test sample required for other nominal maximum sizes of aggregate, no differences entered into the testing to affect the determination of these precision indices. The data are based on the analyses of more than 100 paired test results from 40 to 100 laboratories. The values in the table are given for different ranges of percentage of aggregate passing one sieve and retained on the next finer sieve.

TABLE 1 Precision

	% of Size Fraction Between Consecutive Sieves	Coefficient of Variation (1S %), %[B]	Standard Deviation (1S), %[A]	Acceptable Range of Test Results (D2S %)[B] % of Avg.	Acceptable Range of Test Results (D2S),[A] %
Coarse Aggregates:[C]					
Single-Operator Precision	0 to 3	30[D]	...	85[D]	...
	3 to 10		1.4[D]		4.0[D]
	10 to 20		0.95		2.7
	20 to 50		1.38		3.9
Multilaboratory Precision	0 to 3	35[D]	...	99[D]	...
	3 to 10		1.06		3.0
	10 to 20		1.66		4.7
	20 to 30		2.01		5.7
	30 to 40		2.44		6.9
	40 to 50		3.18		9.0
Fine Aggregates:					
Single-Operator Precision	0 to 3		0.14		0.4
	3 to 10		0.43		1.2
	10 to 20		0.60		1.7
	20 to 30		0.64		1.8
	30 to 40		0.71		2.0
	40 to 50		...		...
Multilaboratory Precision	0 to 3		0.21		0.6
	3 to 10		0.57		1.6
	10 to 20		0.95		2.7
	20 to 30		1.24		3.5
	30 to 40		1.41		4.0
	40 to 50		...		...

[A] These numbers represent, respectively, the (1S) and (D2S) limits as described in Practice C 670.
[B] These numbers represent, respectively, the (1S %) and (D2S %) limits as described in Practice C 670.
[C] The precision estimates are based on coarse aggregates with nominal maximum size of 19.0 mm (¾ in.).
[D] These values are from precision indices first included in Method C 136 – 77. Other indices were developed in 1982 from more recent AASHTO Materials Reference Laboratory sample data, which did not provide sufficient information to revise the values so noted.

The American Society for Testing and Materials takes no position respecting the validity of any patent rights asserted in connection with any item mentioned in this standard. Users of this standard are expressly advised that determination of the validity of any such patent rights, and the risk of infringement of such rights, are entirely their own responsibility.

This standard is subject to revision at any time by the responsible technical committee and must be reviewed every five years and if not revised, either reapproved or withdrawn. Your comments are invited either for revision of this standard or for additional standards and should be addressed to ASTM Headquarters. Your comments will receive careful consideration at a meeting of the responsible technical committee, which you may attend. If you feel that your comments have not received a fair hearing you should make your views known to the ASTM Committee on Standards, 1916 Race St., Philadelphia, PA 19103.

ASTM STANDARD D 422-63, STANDARD METHOD FOR PARTICLE-SIZE ANALYSIS OF SOILS

Designation: D 422 - 63 (Reapproved 1972)$^{\epsilon 1}$

Standard Method for Particle-Size Analysis of Soils[1]

This standard is issued under the fixed designation D 422; the number immediately following the designation indicates the year of original adoption or, in the case of revision, the year of last revision. A number in parentheses indicates the year of last reapproval. A superscript epsilon (ε) indicates an editorial change since the last revision or reapproval.

$^{\epsilon 1}$ NOTE—Section 2 was added editorially and subsequent sections renumbered in July 1984.

1. Scope

1.1 This method covers the quantitative determination of the distribution of particle sizes in soils. The distribution of particle sizes larger than 75 μm (retained on the No. 200 sieve) is determined by sieving, while the distribution of particle sizes smaller than 75 μm is determined by a sedimentation process, using a hydrometer to secure the necessary data (Notes 1 and 2).

NOTE 1—Separation may be made on the No. 4 (4.75-mm), No. 40 (425-μm), or No. 200 (75-μm) sieve instead of the No. 10. For whatever sieve used, the size shall be indicated in the report.

NOTE 2—Two types of dispersion devices are provided: (*1*) a high-speed mechanical stirrer, and (*2*) air dispersion. Extensive investigations indicate that air-dispersion devices produce a more positive dispersion of plastic soils below the 20-μm size and appreciably less degradation on all sizes when used with sandy soils. Because of the definite advantages favoring air dispersion, its use is recommended. The results from the two types of devices differ in magnitude, depending upon soil type, leading to marked differences in particle size distribution, especially for sizes finer than 20 μm.

2. Referenced Documents

2.1 *ASTM Standards:*

D 421 Practice for Dry Preparation of Soil Samples for Particle-Size Analysis and Determination of Soil Constants[2]

E 11 Specification for Wire-Cloth Sieves for Testing Purposes[3]

E 100 Specification for ASTM Hydrometers[4]

3. Apparatus

3.1 *Balances*—A balance sensitive to 0.01 g for weighing the material passing a No. 10 (2.00-mm) sieve, and a balance sensitive to 0.1 % of the mass of the sample to be weighed for weighing the material retained on a No. 10 sieve.

3.2 *Stirring Apparatus*—Either apparatus A or B may be used.

3.2.1 Apparatus A shall consist of a mechanically operated stirring device in which a suitably mounted electric motor turns a vertical shaft at a speed of not less than 10 000 rpm without load. The shaft shall be equipped with a replaceable stirring paddle made of metal, plastic, or hard rubber, as shown in Fig. 1. The shaft shall be of such length that the stirring paddle will operate not less than ¾ in. (19.0 mm) nor more than 1½ in. (38.1 mm) above the bottom of the dispersion cup. A special dispersion cup conforming to either of the designs shown in Fig. 2 shall be provided to hold the sample while it is being dispersed.

3.2.2 Apparatus B shall consist of an air-jet dispersion cup[5] (Note 3) conforming to the general details shown in Fig. 3 (Notes 4 and 5).

NOTE 3—The amount of air required by an air-jet dispersion cup is of the order of 2 ft^3/min; some small air compressors are not capable of supplying sufficient air to operate a cup.

NOTE 4—Another air-type dispersion device, known as a dispersion tube, developed by Chu and Davidson at Iowa State College, has been shown to give results equivalent to those secured by the air-jet dispersion cups. When it is used, soaking of the sample can be done in the sedimentation cylinder, thus eliminating the need for transferring the slurry. When the air-dispersion tube is used, it shall be so indicated in the report.

NOTE 5—Water may condense in air lines when not in use. This water must be removed, either by using a water trap on the air line, or by blowing the water out of the line before using any of the air for dispersion purposes.

3.3 *Hydrometer*—An ASTM hydrometer, graduated to read in either specific gravity of the suspension or grams per litre of suspension, and conforming to the requirements for hydrometers 151H or 152H in Specifications E 100. Dimensions of both hydrometers are the same, the scale being the only item of difference.

3.4 *Sedimentation Cylinder*—A glass cylinder essentially 18 in. (457 mm) in height and 2½ in. (63.5 mm) in diameter, and marked for a volume of 1000 mL. The inside diameter shall be such that the 1000-mL mark is 36 ± 2 cm from the bottom on the inside.

3.5 *Thermometer*—A thermometer accurate to 1°F (0.5°C).

3.6 *Sieves*—A series of sieves, of square-mesh woven-wire cloth, conforming to the requirements of Specification E 11. A full set of sieves includes the following (Note 6):

[1] This method is under the jurisdiction of ASTM Committee D-18 on Soil and Rock and is the direct responsibility of Subcommittee D18.03 on Texture, Plasticity, and Density Characteristics of Soils.

Current edition approved Nov. 21, 1963. Originally published 1935. Replaces D 422 - 62.

[2] *Annual Book of ASTM Standards*, Vol 04.08.

[3] *Annual Book of ASTM Standards*, Vol 14.02.

[4] *Annual Book of ASTM Standards*, Vol 14.03.

[5] Detailed working drawings for this cup are available at a nominal cost from the American Society for Testing and Materials, 1916 Race St., Philadelphia, PA 19103. Order Adjunct No. 12-404220-00.

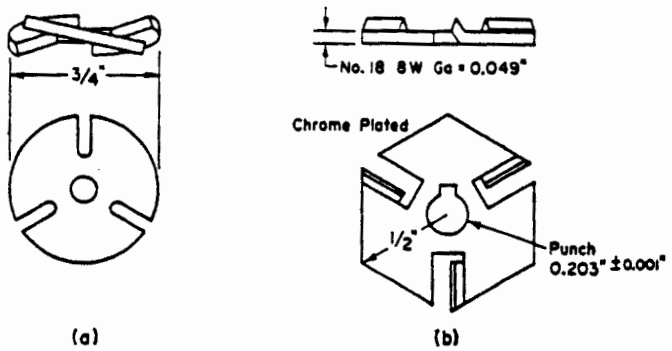

Metric Equivalents

in.	0.001	0.049	0.203	½	¾
mm	0.03	1.24	5.16	12.7	19.0

FIG. 1 Detail of Stirring Paddles

3-in. (75-mm)	No. 10 (2.00-mm)
2-in. (50-mm)	No. 20 (850-μm)
1½-in. (37.5-mm)	No. 40 (425-μm)
1-in. (25.0-mm)	No. 60 (250-μm)
¾-in. (19.0-mm)	No. 140 (106-μm)
⅜-in. (9.5-mm)	No. 200 (75-μm)
No. 4 (4.75-mm)	

NOTE 6—A set of sieves giving uniform spacing of points for the graph, as required in Section 17, may be used if desired. This set consists of the following sieves:

3-in. (75-mm)	No. 16 (1.18-mm)
1½-in. (37.5-mm)	No. 30 (600-μm)
¾-in. (19.0-mm)	No. 50 (300-μm)
⅜-in. (9.5-mm)	No. 100 (150-μm)
No. 4 (4.75-mm)	No. 200 (75-μm)
No. 8 (2.36-mm)	

3.7 *Water Bath or Constant-Temperature Room*—A water bath or constant-temperature room for maintaining the soil suspension at a constant temperature during the hydrometer analysis. A satisfactory water tank is an insulated tank that maintains the temperature of the suspension at a convenient constant temperature at or near 68°F (20°C). Such a device is illustrated in Fig. 4. In cases where the work is performed in a room at an automatically controlled constant temperature, the water bath is not necessary.

3.8 *Beaker*—A beaker of 250-mL capacity.

3.9 *Timing Device*—A watch or clock with a second hand.

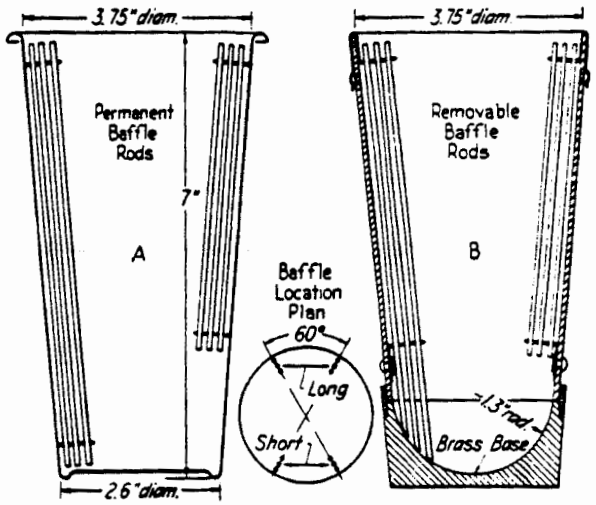

Metric Equivalents

in.	1.3	2.6	3.75
mm	33	66	95.2

FIG. 2 Dispersion Cups of Apparatus

4. Dispersing Agent

4.1 A solution of sodium hexametaphosphate (sometimes called sodium metaphosphate) shall be used in distilled or demineralized water, at the rate of 40 g of sodium hexametaphosphate/litre of solution (Note 7).

NOTE 7—Solutions of this salt, if acidic, slowly revert or hydrolyze back to the orthophosphate form with a resultant decrease in dispersive action. Solutions should be prepared frequently (at least once a month) or adjusted to pH of 8 or 9 by means of sodium carbonate. Bottles containing solutions should have the date of preparation marked on them.

4.2 All water used shall be either distilled or demineralized water. The water for a hydrometer test shall be brought to the temperature that is expected to prevail during the hydrometer test. For example, if the sedimentation cylinder is to be placed in the water bath, the distilled or demineralized water to be used shall be brought to the temperature of the controlled water bath; or, if the sedimentation cylinder is used in a room with controlled temperature, the water for the test shall be at the temperature of the room. The basic temperature for the hydrometer test is 68°F (20°C). Small variations of temperature do not introduce differences that are of practical significance and do not prevent the use of corrections derived as prescribed.

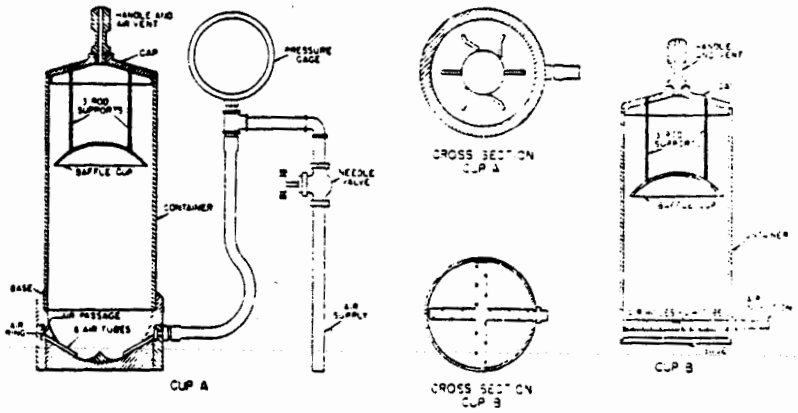

FIG. 3 Air-Jet Dispersion Cups of Apparatus B

5. Test Sample

5.1 Prepare the test sample for mechanical analysis as outlined in Practice D 421. During the preparation procedure the sample is divided into two portions. One portion contains only particles retained on the No. 10 (2.00-mm) sieve while the other portion contains only particles passing the No. 10 sieve. The mass of air-dried soil selected for purpose of tests, as prescribed in Practice D 421, shall be sufficient to yield quantities for mechanical analysis as follows:

5.1.1 The size of the portion retained on the No. 10 sieve shall depend on the maximum size of particle, according to the following schedule:

Nominal Diameter of Largest Particles, in. (mm)	Approximate Minimum Mass of Portion, g
⅜ (9.5)	500
¾ (19.0)	1000
1 (25.4)	2000
1½ (38.1)	3000
2 (50.8)	4000
3 (76.2)	5000

5.1.2 The size of the portion passing the No. 10 sieve shall be approximately 115 g for sandy soils and approximately 65 g for silt and clay soils.

5.2 Provision is made in Section 5 of Practice D 421 for weighing of the air-dry soil selected for purpose of tests, the separation of the soil on the No. 10 sieve by dry-sieving and washing, and the weighing of the washed and dried fraction retained on the No. 10 sieve. From these two masses the percentages retained and passing the No. 10 sieve can be calculated in accordance with 12.1.

NOTE 8—A check on the mass values and the thoroughness of pulverization of the clods may be secured by weighing the portion passing the No. 10 sieve and adding this value to the mass of the washed and oven-dried portion retained on the No. 10 sieve.

SIEVE ANALYSIS OF PORTION RETAINED ON NO. 10 (2.00-mm) SIEVE

6. Procedure

6.1 Separate the portion retained on the No. 10 (2.00-mm) sieve into a series of fractions using the 3-in. (75-mm), 2-in. (50-mm), 1½-in. (37.5-mm), 1-in. (25.0-mm), ¾-in. (19.0-mm), ⅜-in. (9.5-mm), No. 4 (4.75-mm), and No. 10 sieves, or as many as may be needed depending on the sample, or upon the specifications for the material under test.

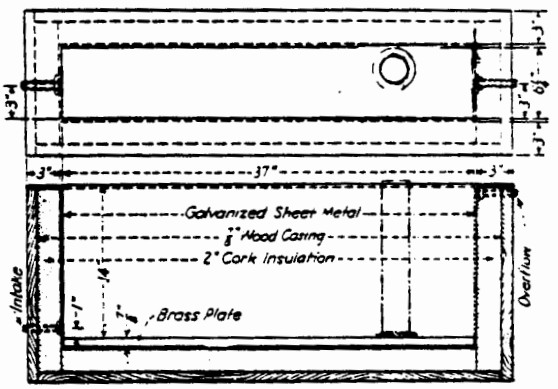

Metric Equivalents

in.	⅞	1	3	6¼	14	37
mm	22.2	25.4	76.2	158.2	356	940

FIG. 4 Insulated Water Bath

6.2 Conduct the sieving operation by means of a lateral and vertical motion of the sieve, accompanied by a jarring action in order to keep the sample moving continuously over the surface of the sieve. In no case turn or manipulate fragments in the sample through the sieve by hand. Continue sieving until not more than 1 mass % of the residue on a sieve passes that sieve during 1 min of sieving. When mechanical sieving is used, test the thoroughness of sieving by using the hand method of sieving as described above.

6.3 Determine the mass of each fraction on a balance conforming to the requirements of 3.1. At the end of weighing, the sum of the masses retained on all the sieves used should equal closely the original mass of the quantity sieved.

HYDROMETER AND SIEVE ANALYSIS OF PORTION PASSING THE NO. 10 (2.00-mm) SIEVE

7. Determination of Composite Correction for Hydrometer Reading

7.1 Equations for percentages of soil remaining in suspension, as given in 14.3, are based on the use of distilled or demineralized water. A dispersing agent is used in the water, however, and the specific gravity of the resulting liquid is appreciably greater than that of distilled or demineralized water.

7.1.1 Both soil hydrometers are calibrated at 68°F (20°C), and variations in temperature from this standard temperature produce inaccuracies in the actual hydrometer readings. The amount of the inaccuracy increases as the variation from the standard temperature increases.

7.1.2 Hydrometers are graduated by the manufacturer to be read at the bottom of the meniscus formed by the liquid on the stem. Since it is not possible to secure readings of soil suspensions at the bottom of the meniscus, readings must be taken at the top and a correction applied.

7.1.3 The net amount of the corrections for the three items enumerated is designated as the composite correction, and may be determined experimentally.

7.2 For convenience, a graph or table of composite corrections for a series of 1° temperature differences for the range of expected test temperatures may be prepared and used as needed. Measurement of the composite corrections may be made at two temperatures spanning the range of expected test temperatures, and corrections for the intermediate temperatures calculated assuming a straight-line relationship between the two observed values.

7.3 Prepare 1000 mL of liquid composed of distilled or demineralized water and dispersing agent in the same proportion as will prevail in the sedimentation (hydrometer) test. Place the liquid in a sedimentation cyclinder and the cylinder in the constant-temperature water bath, set for one of the two temperatures to be used. When the temperature of the liquid becomes constant, insert the hydrometer, and, after a short interval to permit the hydrometer to come to the temperature of the liquid, read the hydrometer at the top of the meniscus formed on the stem. For hydrometer 151H the composite correction is the difference between this reading and one; for hydrometer 152H it is the difference between the reading and zero. Bring the liquid and the hydrometer to the other temperature to be used, and secure the composite correction as before.

8. Hygroscopic Moisture

8.1 When the sample is weighed for the hydrometer test, weigh out an auxiliary portion of from 10 to 15 g in a small metal or glass container, dry the sample to a constant mass in an oven at 230 ± 9°F (110 ± 5°C), and weigh again. Record the masses.

9. Dispersion of Soil Sample

9.1 When the soil is mostly of the clay and silt sizes, weigh out a sample of air-dry soil of approximately 50 g. When the soil is mostly sand the sample should be approximately 100 g.

9.2 Place the sample in the 250-mL beaker and cover with 125 mL of sodium hexametaphosphate solution (40 g/L). Stir until the soil is thoroughly wetted. Allow to soak for at least 16 h.

9.3 At the end of the soaking period, disperse the sample further, using either stirring apparatus A or B. If stirring apparatus A is used, transfer the soil - water slurry from the beaker into the special dispersion cup shown in Fig. 2, washing any residue from the beaker into the cup with distilled or demineralized water (Note 9). Add distilled or demineralized water, if necessary, so that the cup is more than half full. Stir for a period of 1 min.

NOTE 9—A large size syringe is a convenient device for handling the water in the washing operation. Other devices include the wash-water bottle and a hose with nozzle connected to a pressurized distilled water tank.

9.4 If stirring apparatus B (Fig. 3) is used, remove the cover cap and connect the cup to a compressed air supply by means of a rubber hose. A air gage must be on the line between the cup and the control valve. Open the control valve so that the gage indicates 1 psi (7 kPa) pressure (Note 10). Transfer the soil - water slurry from the beaker to the air-jet dispersion cup by washing with distilled or demineralized water. Add distilled or demineralized water, if necessary, so that the total volume in the cup is 250 mL, but no more.

NOTE 10—The initial air pressure of 1 psi is required to prevent the soil - water mixture from entering the air-jet chamber when the mixture is transferred to the dispersion cup.

9.5 Place the cover cap on the cup and open the air control valve until the gage pressure is 20 psi (140 kPa). Disperse the soil according to the following schedule:

Plasticity Index	Dispersion Period, min
Under 5	5
6 to 20	10
Over 20	15

Soils containing large percentages of mica need be dispersed for only 1 min. After the dispersion period, reduce the gage pressure to 1 psi preparatory to transfer of soil - water slurry to the sedimentation cylinder.

10. Hydrometer Test

10.1 Immediately after dispersion, transfer the soil - water slurry to the glass sedimentation cylinder, and add distilled or demineralized water until the total volume is 1000 mL.

10.2 Using the palm of the hand over the open end of the cylinder (or a rubber stopper in the open end), turn the cylinder upside down and back for a period of 1 min to complete the agitation of the slurry (Note 11). At the end of 1 min set the cylinder in a convenient location and take hydrometer readings at the following intervals of time (measured from the beginning of sedimentation), or as many as may be needed, depending on the sample or the specification for the material under test: 2, 5, 15, 30, 60, 250, and 1440 min. If the controlled water bath is used, the sedimentation cylinder should be placed in the bath between the 2- and 5-min readings.

NOTE 11—The number of turns during this minute should be approximately 60, counting the turn upside down and back as two turns.

any soil remaining in the bottom of the cylinder during the first few turns should be loosened by vigorous shaking of the cylinder while it is in the inverted position.

10.3 When it is desired to take a hydrometer reading, carefully insert the hydrometer about 20 to 25 s before the reading is due to approximately the depth it will have when the reading is taken. As soon as the reading is taken, carefully remove the hydrometer and place it with a spinning motion in a graduate of clean distilled or demineralized water.

NOTE 12—It is important to remove the hydrometer immediately after each reading. Readings shall be taken at the top of the meniscus formed by the suspension around the stem, since it is not possible to secure readings at the bottom of the meniscus.

10.4 After each reading, take the temperature of the suspension by inserting the thermometer into the suspension.

11. Sieve Analysis

11.1 After taking the final hydrometer reading, transfer the suspension to a No. 200 (75-μm) sieve and wash with tap water until the wash water is clear. Transfer the material on the No. 200 sieve to a suitable container, dry in an oven at 230 ± 9°F (110 ± 5°C) and make a sieve analysis of the portion retained, using as many sieves as desired, or required for the material, or upon the specification of the material under test.

CALCULATIONS AND REPORT

12. Sieve Analysis Values for the Portion Coarser than the No. 10 (2.00-mm) Sieve

12.1 Calculate the percentage passing the No. 10 sieve by dividing the mass passing the No. 10 sieve by the mass of soil originally split on the No. 10 sieve, and multiplying the result by 100. To obtain the mass passing the No. 10 sieve, subtract the mass retained on the No. 10 sieve from the original mass.

12.2 To secure the total mass of soil passing the No. 4 (4.75-mm) sieve, add to the mass of the material passing the No. 10 sieve the mass of the fraction passing the No. 4 sieve and retained on the No. 10 sieve. To secure the total mass of soil passing the ⅜-in. (9.5-mm) sieve, add to the total mass of soil passing the No. 4 sieve, the mass of the fraction passing the ⅜-in. sieve and retained on the No. 4 sieve. For the remaining sieves, continue the calculations in the same manner.

12.3 To determine the total percentage passing for each sieve, divide the total mass passing (see 12.2) by the total mass of sample and multiply the result by 100.

13. Hygroscopic Moisture Correction Factor

13.1 The hydroscopic moisture correction factor is the ratio between the mass of the oven-dried sample and the air-dry mass before drying. It is a number less than one, except when there is no hygroscopic moisture.

14. Percentages of Soil in Suspension

14.1 Calculate the oven-dry mass of soil used in the hydrometer analysis by multiplying the air-dry mass by the hygroscopic moisture correction factor.

TABLE 1 Values of Correction Factor, a, for Different Specific Gravities of Soil Particles[A]

Specific Gravity	Correction Factor[A]
2.95	0.94
2.90	0.95
2.85	0.96
2.80	0.97
2.75	0.98
2.70	0.99
2.65	1.00
2.60	1.01
2.55	1.02
2.50	1.03
2.45	1.05

[A] For use in equation for percentage of soil remaining in suspension when using hydrometer 152H.

14.2 Calculate the mass of a total sample represented by the mass of soil used in the hydrometer test, by dividing the oven-dry mass used by the percentage passing the No. 10 (2.00-mm) sieve, and multiplying the result by 100. This value is the weight W in the equation for percentage remaining in suspension.

14.3 The percentage of soil remaining in suspension at the level at which the hydrometer is measuring the density of the suspension may be calculated as follows (Note 13): For hydrometer 151H:

$$P = [(100\,000/W) \times G/(G - G_1)](R - G_1)$$

NOTE 13—The bracketed portion of the equation for hydrometer 151H is constant for a series of readings and may be calculated first and then multiplied by the portion in the parentheses.

For hydrometer 152H:

$$P = (Ra/W) \times 100$$

where:

a = correction faction to be applied to the reading of hydrometer 152H. (Values shown on the scale are computed using a specific gravity of 2.65. Correction factors are given in Table 1),

P = percentage of soil remaining in suspension at the level at which the hydrometer measures the density of the suspension,

R = hydrometer reading with composite correction applied (Section 7),

W = oven-dry mass of soil in a total test sample represented by mass of soil dispersed (see 14.2), g,

G = specific gravity of the soil particles, and

G_1 = specific gravity of the liquid in which soil particles are suspended. Use numerical value of one in both instances in the equation. In the first instance any possible variation produces no significant effect, and in the second instance, the composite correction for R is based on a value of one for G_1.

15. Diameter of Soil Particles

15.1 The diameter of a particle corresponding to the percentage indicated by a given hydrometer reading shall be calculated according to Stokes' law (Note 14), on the basis that a particle of this diameter was at the surface of the suspension at the beginning of sedimentation and had settled to the level at which the hydrometer is measuring the density of the suspension. According to Stokes' law:

$$D = \sqrt{[30n/980(G - G_1)] \times L/T}$$

where:

D = diameter of particle, mm,

n = coefficient of viscosity of the suspending medium (in this case water) in poises (varies with changes in temperature of the suspending medium),

L = distance from the surface of the suspension to the level at which the density of the suspension is being measured, cm. (For a given hydrometer and sedimentation cylinder, values vary according to the hydrometer readings. This distance is known as effective depth (Table 2)),

T = interval of time from beginning of sedimentation to the taking of the reading, min,

G = specific gravity of soil particles, and

G_l = specific gravity (relative density) of suspending medium (value may be used as 1.000 for all practical purposes).

NOTE 14—Since Stokes' law considers the terminal velocity of a single sphere falling in an infinity of liquid, the sizes calculated represent the diameter of spheres that would fall at the same rate as the soil particles.

15.2 For convenience in calculations the above equation may be written as follows:

$$D = K\sqrt{L/T}$$

where:

K = constant depending on the temperature of the suspension and the specific gravity of the soil particles. Values of K for a range of temperatures and specific gravities are given in Table 3. The value of K does not change for a series of readings constituting a test, while values of L and T do vary.

15.3 Values of D may be computed with sufficient accuracy, using an ordinary 10-in. slide rule.

NOTE 15—The value of L is divided by T using the A- and B-scales, the square root being indicated on the D-scale. Without ascertaining the value of the square root it may be multiplied by K, using either the C- or CI-scale.

16. Sieve Analysis Values for Portion Finer than No. 10 (2.00-mm) Sieve

16.1 Calculation of percentages passing the various sieves used in sieving the portion of the sample from the hydrometer test involves several steps. The first step is to calculate the mass of the fraction that would have been retained on the No. 10 sieve had it not been removed. This mass is equal to the total percentage retained on the No. 10 sieve (100 minus total percentage passing) times the mass of the total sample represented by the mass of soil used (as calculated in 14.2), and the result divided by 100.

16.2 Calculate next the total mass passing the No. 200 sieve. Add together the fractional masses retained on all the sieves, including the No. 10 sieve, and subtract this sum from the mass of the total sample (as calculated in 14.2).

16.3 Calculate next the total masses passing each of the other sieves, in a manner similar to that given in 12.2.

16.4 Calculate last the total percentages passing by dividing the total mass passing (as calculated in 16.3) by the total mass of sample (as calculated in 14.2), and multiply the result by 100.

TABLE 2 Values of Effective Depth Based on Hydrometer and Sedimentation Cylinder of Specified Sizes[A]

Hydrometer 151H		Hydrometer 152H			
Actual Hydrometer Reading	Effective Depth, L, cm	Actual Hydrometer Reading	Effective Depth, L, cm	Actual Hydrometer Reading	Effective Depth, L, cm
1.000	16.3	0	16.3	31	11.2
1.001	16.0	1	16.1	32	11.1
1.002	15.8	2	16.0	33	10.9
1.003	15.5	3	15.8	34	10.7
1.004	15.2	4	15.6	35	10.6
1.005	15.0	5	15.5		
1.006	14.7	6	15.3	36	10.4
1.007	14.4	7	15.2	37	10.2
1.008	14.2	8	15.0	38	10.1
1.009	13.9	9	14.8	39	9.9
1.010	13.7	10	14.7	40	9.7
1.011	13.4	11	14.5	41	9.6
1.012	13.1	12	14.3	42	9.4
1.013	12.9	13	14.2	43	9.2
1.014	12.6	14	14.0	44	9.1
1.015	12.3	15	13.8	45	8.9
1.016	12.1	16	13.7	46	8.8
1.017	11.8	17	13.5	47	8.6
1.018	11.5	18	13.3	48	8.4
1.019	11.3	19	13.2	49	8.3
1.020	11.0	20	13.0	50	8.1
1.021	10.7	21	12.9	51	7.9
1.022	10.5	22	12.7	52	7.8
1.023	10.2	23	12.5	53	7.6
1.024	10.0	24	12.4	54	7.4
1.025	9.7	25	12.2	55	7.3
1.026	9.4	26	12.0	56	7.1
1.027	9.2	27	11.9	57	7.0
1.028	8.9	28	11.7	58	6.8
1.029	8.6	29	11.5	59	6.6
1.030	8.4	30	11.4	60	6.5
1.031	8.1				
1.032	7.8				
1.033	7.6				
1.034	7.3				
1.035	7.0				
1.036	6.8				
1.037	6.5				
1.038	6.2				

[A] Values of effective depth are calculated from the equation:

$$L = L_1 + \tfrac{1}{2}[L_2 - (V_B/A)]$$

where:

L = effective depth, cm,

L_1 = distance along the stem of the hydrometer from the top of the bulb to the mark for a hydrometer reading, cm,

L_2 = overall length of the hydrometer bulb, cm,

V_B = volume of hydrometer bulb, cm^3, and

A = cross-sectional area of sedimentation cylinder, cm^2

Values used in calculating the values in Table 2 are as follows:

For both hydrometers, 151H and 152H:

L_2 = 14.0 cm

V_B = 67.0 cm^3

A = 27.8 cm^2

For hydrometer 151H:

L_1 = 10.5 cm for a reading of 1.000

= 2.3 cm for a reading of 1.031

For hydrometer 152H:

L_1 = 10.5 cm for a reading of 0 g/litre

= 2.3 cm for a reading of 50 g/litre

17. Graph

17.1 When the hydrometer analysis is performed, a graph

TABLE 3 Values of K for Use in Equation for Computing Diameter of Particle in Hydrometer Analysis

Temperature, °C	Specific Gravity of Soil Particles								
	2.45	2.50	2.55	2.60	2.65	2.70	2.75	2.80	2.85
16	0.01510	0.01505	0.01481	0.01457	0.01435	0.01414	0.01394	0.01374	0.01356
17	0.01511	0.01486	0.01462	0.01439	0.01417	0.01396	0.01376	0.01356	0.01338
18	0.01492	0.01467	0.01443	0.01421	0.01399	0.01378	0.01359	0.01339	0.01321
19	0.01474	0.01449	0.01425	0.01403	0.01382	0.01361	0.01342	0.1323	0.01305
20	0.01456	0.01431	0.01408	0.01386	0.01365	0.01344	0.01325	0.01307	0.01289
21	0.01438	0.01414	0.01391	0.01369	0.01348	0.01328	0.01309	0.01291	0.01273
22	0.01421	0.01397	0.01374	0.01353	0.01332	0.01312	0.01294	0.01276	0.01258
23	0.01404	0.01381	0.01358	0.01337	0.01317	0.01297	0.01279	0.01261	0.01243
24	0.01388	0.01365	0.01342	0.01321	0.01301	0.01282	0.01264	0.01246	0.01229
25	0.01372	0.01349	0.01327	0.01306	0.01286	0.01267	0.01249	0.01232	0.01215
26	0.01357	0.01334	0.01312	0.01291	0.01272	0.01253	0.01235	0.01218	0.01201
27	0.01342	0.01319	0.01297	0.01277	0.01258	0.01239	0.01221	0.01204	0.01188
28	0.01327	0.01304	0.01283	0.01264	0.01244	0.01255	0.01208	0.01191	0.01175
29	0.01312	0.01290	0.01269	0.01249	0.01230	0.01212	0.01195	0.01178	0.01162
30	0.01298	0.01276	0.01256	0.01236	0.01217	0.01199	0.01182	0.01165	0.01149

of the test results shall be made, plotting the diameters of the particles on a logarithmic scale as the abscissa and the percentages smaller than the corresponding diameters to an arithmetic scale as the ordinate. When the hydrometer analysis is not made on a portion of the soil, the preparation of the graph is optional, since values may be secured directly from tabulated data.

18. Report

18.1 The report shall include the following:

18.1.1 Maximum size of particles,

18.1.2 Percentage passing (or retained on) each sieve, which may be tabulated or presented by plotting on a graph (Note 16),

18.1.3 Description of sand and gravel particles:

18.1.3.1 Shape—rounded or angular,

18.1.3.2 Hardness—hard and durable, soft, or weathered and friable,

18.1.4 Specific gravity, if unusually high or low,

18.1.5 Any difficulty in dispersing the fraction passing the No. 10 (2.00-mm) sieve, indicating any change in type and amount of dispersing agent, and

18.1.6 The dispersion device used and the length of the dispersion period.

NOTE 16—This tabulation of graph represents the gradation of the sample tested. If particles larger than those contained in the sample were removed before testing, the report shall so state giving the amount and maximum size.

18.2 For materials tested for compliance with definite specifications, the fractions called for in such specifications shall be reported. The fractions smaller than the No. 10 sieve shall be read from the graph.

18.3 For materials for which compliance with definite specifications is not indicated and when the soil is composed almost entirely of particles passing the No. 4 (4.75-mm) sieve, the results read from the graph may be reported as follows:

(1) Gravel, passing 3-in. and retained on No. 4 sieve %
(2) Sand, passing No. 4 sieve and retained on No. 200 sieve %
  (a) Coarse sand, passing No. 4 sieve and retained on No. 10 sieve %
  (b) Medium sand, passing No. 10 sieve and retained on No. 40 sieve %
  (c) Fine sand, passing No. 40 sieve and retained on No. 200 sieve %
(3) Silt size, 0.074 to 0.005 mm %
(4) Clay size, smaller than 0.005 mm %
  Colloids, smaller than 0.001 mm %

18.4 For materials for which compliance with definite specifications is not indicated and when the soil contains material retained on the No. 4 sieve sufficient to require a sieve analysis on that portion, the results may be reported as follows (Note 17):

SIEVE ANALYSIS

Sieve Size	Percentage Passing
3-in.	
2-in.	
1½-in.	
1-in.	
¾-in.	
⅜-in.	
No. 4 (4.75-mm)	
No. 10 (2.00-mm)	
No. 40 (425-μm)	
No. 200 (75-μm)	

HYDROMETER ANALYSIS

0.074 mm	
0.005 mm	
0.001 mm	

NOTE 17—No. 8 (2.36-mm) and No. 50 (300-μm) sieves may be substituted for No. 10 and No. 40 sieves.

The American Society for Testing and Materials takes no position respecting the validity of any patent rights asserted in connection with any item mentioned in this standard. Users of this standard are expressly advised that determination of the validity of any such patent rights, and the risk of infringement of such rights, are entirely their own responsibility.

This standard is subject to revision at any time by the responsible technical committee and must be reviewed every five years and if not revised, either reapproved or withdrawn. Your comments are invited either for revision of this standard or for additional standards and should be addressed to ASTM Headquarters. Your comments will receive careful consideration at a meeting of the responsible technical committee, which you may attend. If you feel that your comments have not received a fair hearing you should make your views known to the ASTM Committee on Standards, 1916 Race St., Philadelphia, PA 19103.

Los Alamos National Laboratory **Environmental Restoration Program** Standard Operating Procedure	No: LANL-ER-SOP-11.03 Rev: 0

Permeability of Granular Soils

	(Print Name)	(Signature)	(Date)
Preparer:	Sandra E. Wagner	Sandra E. Wagner	11-26-91
Quality Review by:	Terry Morgan	Terry Morgan	12/13/91
Technical Review by:	Clarence J. Duffy	Clarence J. Duffy	12/19/91
QPPL Approval:	Karen L Warthen	Karen L Warthen	3/4/92
PM Approval:	Robert W Vocke	Robert W Vocke	3-4-92

Effective Date: 3.16.92

PERMEABILITY OF GRANULAR SOILS

1.0 PURPOSE

The purpose of this procedure is to show the method in which the coefficient of permeability by a constant-head method for the laminar flow of water through granular soils can be determined.

2.0 SCOPE

2.1 Applicability

This procedure is applicable to all field team members establishing representative values of the coefficient of permeability of granular soils for the Environmental Restoration program.

2.2 Training

Field team members using this procedure must document that they have read and understand this procedure and the procedures in Section 1.0, General Instructions.

3.0 DEFINITIONS

There are no unique definitions in this procedure.

4.0 BACKGROUND AND/OR CAUTIONS

Refer to the attached ASTM Standard Method D2434-68, and to the Site Health and Safety plan for hazards and/or cautions.

5.0 EQUIPMENT

Refer to the attached ASTM Standard Method D2434-68.

6.0 PROCEDURE

Refer to the attached ASTM Standard Method D2434-68.

7.0 REFERENCES

The following procedures are directly associated with this procedure and should be reviewed before field operations:

ASTM STANDARD D2434-68. 1968. Standard Test Method for Permeability of Granular Soil (Constant Head).

LANL-ER-SOPs in Section 1.0, General Instructions.

8.0 RECORDS

The records produced during this procedure will include a Chain-of-Custody/Request for Analysis form (SOP-01.04) which will have the following information:

- Field Sample Number/Identification
- Date and time collected
- Sample container and volume
- Test requested

The Laboratory will report the following information:

- All calculations
- Deviations, if applicable

Permeability Data Sheets will become part of the records if they are used.

9.0 ATTACHMENTS

A. ASTM STANDARD D2434-68. 1968. Standard Test Method for Permeability of Granular Soils (Constant Head).

ASTM STANDARD D2434-68
STANDARD TEST METHOD FOR PERMEABILITY OF GRANULAR SOILS (CONSTANT HEAD)

Designation: D 2434 - 68 (Reapproved 1974)$^{\epsilon 1}$

Standard Test Method for Permeability of Granular Soils (Constant Head)[1]

This standard is issued under the fixed designation D 2434; the number immediately following the designation indicates the year of original adoption or, in the case of revision, the year of last revision. A number in parentheses indicates the year of last reapproval. A superscript epsilon (ε) indicates an editorial change since the last revision or reapproval.

$^{\epsilon 1}$ NOTE—Section 2 was added editorially and subsequent sections renumbered in July 1984.

1. Scope

1.1 This test method covers the determination of the coefficient of permeability by a constant-head method for the laminar flow of water through granular soils. The procedure is to establish representative values of the coefficient of permeability of granular soils that may occur in natural deposits as placed in embankments, or when used as base courses under pavements. In order to limit consolidation influences during testing, this procedure is limited to disturbed granular soils containing not more than 10 % soil passing the 75-μm (No. 200) sieve.

2. Referenced Documents

2.1 *ASTM Standards:*
D 422 Method for Particle-Size Analysis of Soils[2]
D 2049 Test Method for Relative Density of Cohesionless Soils[3]

3. Fundamental Test Conditions

3.1 The following ideal test conditions are prerequisites for the laminar flow of water through granular soils under constant-head conditions:

3.1.1 Continuity of flow with no soil volume change during a test,

3.1.2 Flow with the soil voids saturated with water and no air bubbles in the soil voids,

3.1.3 Flow in the steady state with no changes in hydraulic gradient, and

3.1.4 Direct proportionality of velocity of flow with hydraulic gradients below certain values, at which turbulent flow starts.

3.2. All other types of flow involving partial saturation of soil voids, turbulent flow, and unsteady state of flow are transient in character and yield variable and time-dependent coefficients of permeability; therefore, they require special test conditions and procedures.

4. Apparatus

4.1 *Permeameters*, as shown in Fig. 1, shall have specimen cylinders with minimum diameters approximately 8 or 12 times the maximum particle size in accordance with Table 1. The permeameter should be fitted with: (*1*) a porous disk or suitable reinforced screen at the bottom with a permeability greater than that of the soil specimen, but with openings sufficiently small (not larger than 10 % finer size) to prevent movement of particles; (*2*) manometer outlets for measuring the loss of head, *h*, over a length, *l*, equivalent to at least the diameter of the cylinder; (*3*) a porous disk or suitable reinforced screen with a spring attached to the top, or any other device, for applying a light spring pressure of 22 to 45-N (5 to 10-lbf) total load, when the top plate is attached in place. This will hold the placement density and volume of soil without significant change during the saturation of the specimen and the permeability testing to satisfy the requirement prescribed in 3.1.1.

4.2 *Constant-Head Filter Tank*, as shown in Fig. 1, to supply water and to remove most of the air from tap water, fitted with suitable control valves to maintain conditions described in 3.1.2.

NOTE 1—De-aired water may be used if preferred.

4.3 *Large Funnels*, fitted with special cylindrical spouts 25 mm (1 in.) in diameter for 9.5-mm (⅜-in.) maximum size particles and 13 mm (½ in.) in diameter for 2.00-mm (No. 10) maximum size particles. The length of the spout should be greater than the full length of the permeability chamber—at least 150 mm (6 in.).

4.4 *Specimen Compaction Equipment*[2]—Compaction equipment as deemed desirable may be used. The following are suggested: a vibrating tamper fitted with a tamping foot 51 mm (2 in.) in diameter; a sliding tamper with a tamping foot 51 mm (2 in.) in diameter, and a rod for sliding weights of 100 g (0.25 lb) (for sands) to 1 kg (2.25 lb) (for soils with a large gravel content), having an adjustable height of drop to 102 mm (4 in.) for sands and 203 mm (8 in.) for soils with large gravel contents.

4.5 *Vacuum Pump or Water-Faucet Aspirator*, for evacuating and for saturating soil specimens under full vacuum (see Fig. 2).

4.6 *Manometer Tubes*, with metric scales for measuring head of water.

4.7 *Balance*, of 2-kg (4.4-lb) capacity, sensitive to 1 g (0.002 lb).

4.8 *Scoop*, with a capacity of about 100 g (0.25 lb) of soil.

4.9 *Miscellaneous Apparatus*—Thermometers, clock with sweep second hand, 250-mL graduate, quart jar, mixing pan, etc.

[1] This test method is under the jurisdiction of ASTM Committee D-18 on Soil and Rock and is the direct responsibility of Subcommittee D18.04 on Hydrologic Properties of Soil and Rocks.

Current edition approved Sept. 13, 1968. Originally issued 1965. Replaces D 2434 - 65 T.

[2] *Annual Book of ASTM Standards*, Vol 04.08.

[3] Discontinued—See *1983 Annual Book of ASTM Standards*, Vol 04.08.

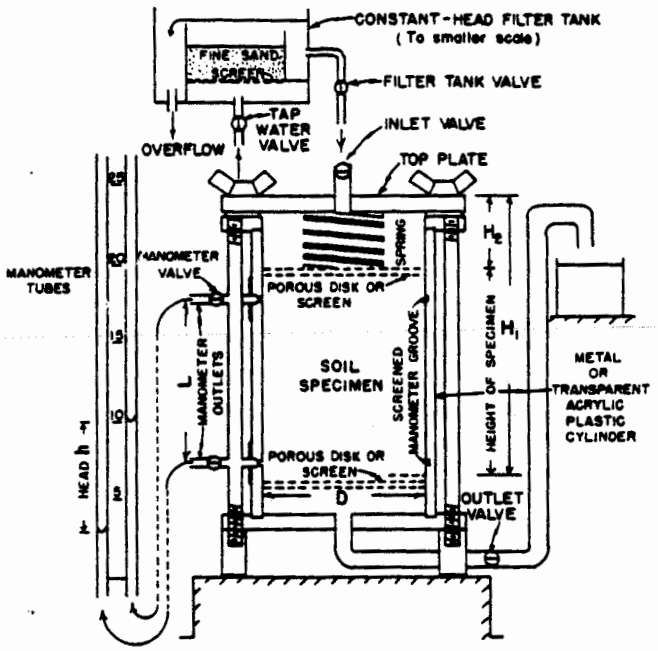

FIG. 1 Constant-Head Permeameter

5. Sample

5.1 A representative sample of air-dried granular soil, containing less than 10 % of the material passing the 75-µm (No. 200) sieve and equal to an amount sufficient to satisfy the requirements prescribed in 5.2 and 5.3, shall be selected by the method of quartering.

5.2 A sieve analysis (see Method D 422) shall be made on a representative sample of the complete soil prior to the permeability test. Any particles larger than 19 mm (¾ in.) shall be separated out by sieving (Method D 422). This oversize material shall not be used for the permeability test, but the percentage of the oversize material shall be recorded.

NOTE 2—In order to establish representative values of coefficients of permeabilities for the range that may exist in the situation being investigated, samples of the finer, average, and coarser soils should be obtained for testing.

5.3 From the material from which the oversize has been removed (see 5.2), select by the method of quartering, a sample for testing equal to an amount approximately twice that required for filling the permeameter chamber.

6. Preparation of Specimens

6.1 The size of permeameter to be used shall be as prescribed in Table 1.

6.2 Make the following initial measurements in centimetres or square centimetres and record on the data sheet (Fig. 3); the inside diameter, D, of the permeameter; the length, L, between manometer outlets; the depth, H_1, measured at four symmetrically spaced points from the upper surface of the top plate of the permeability cylinder to the top of the upper porous stone or screen temporarily placed on the lower porous plate or screen. This automatically deducts the thickness of the upper porous plate or screen from the height measurements used to determine the volume of soil placed in the permeability cylinder. Use a duplicate top plate containing four large symmetrically spaced openings through which the necessary measurements can be made to determine the average value for H_1. Calculate the cross-sectional area, A, of the specimen.

6.3 Take a small portion of the sample selected as prescribed in 5.3 for water content determinations. Record the weight of the remaining air-dried sample (see 5.3), W_1,

TABLE 1 Cylinder Diameter

Maximum Particle Size Lies Between Sieve Openings	Minimum Cylinder Diameter			
	Less than 35 % of Total Soil Retained on Sieve Opening		More than 35 % of Total Soil Retained on Sieve Opening	
	2.00-mm (No. 10)	9.5-mm (⅜-in.)	2.00-mm (No. 10)	9.5-mm (⅜-in.)
2.00-mm (No. 10) and 9.5-mm (⅜ in.)	76 mm (3 in.)	...	114 mm (4.5 in.)	...
9.5-mm (⅜-in.) and 19.0-mm (¾ in.)	...	152 mm (6 in.)	...	229 mm (9 in.)

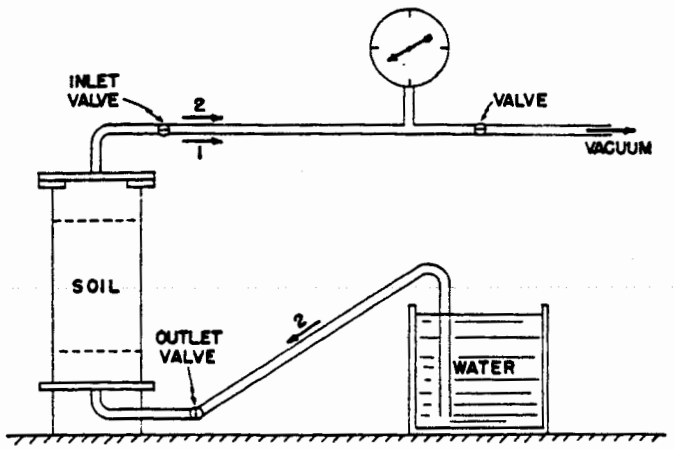

FIG. 2 Device for Evacuating and Saturating Specimen

for unit weight determinations.

6.4 Place the prepared soil by one of the following procedures in uniform thin layers approximately equal in thickness after compaction to the maximum size of particle, but not less than approximately 15 mm (0.60 in.).

6.4.1 For soils having a maximum size of 9.5 mm (⅜ in.) or less, place the appropriate size of funnel, as prescribed in 4.3, in the permeability device with the spout in contact with the lower porous plate or screen, or previously formed layer, and fill the funnel with sufficient soil to form a layer, taking soil from different areas of the sample in the pan. Lift the funnel by 15 mm (0.60 in.), or approximately the unconsolidated layer thickness to be formed, and spread the soil with a slow spiral motion, working from the perimeter of the device toward the center, so that a uniform layer is formed. Remix the soil in the pan for each successive layer to reduce segregation caused by taking soil from the pan.

6.4.2 For soils with a maximum size greater than 9.5 mm (⅜ in.), spread the soil from a scoop. Uniform spreading can be obtained by sliding a scoopful of soil in a nearly horizontal position down along the inside surface of the device to the bottom or to the formed layer, then tilting the scoop and drawing it toward the center with a single slow motion; this allows the soil to run smoothly from the scoop in a windrow without segregation. Turn the permeability cylinder sufficiently for the next scoopful, thus progressing around the inside perimeter to form a uniform compacted layer of a thickness equal to the maximum particle size.

6.5 Compact successive layers of soil to the desired relative density by appropriate procedures, as follows, to a height of about 2 cm (0.8 in.) above the upper manometer outlet.

6.5.1 *Minimum Density (0 % Relative Density)*—Continue placing layers of soil in succession by one of the procedures described in 6.4.1 or 6.4.2 until the device is filled to the proper level.

6.5.2 *Maximum Density (100 % Relative Density):*

6.5.2.1 *Compaction by Vibrating Tamper*—Compact each layer of soil thoroughly with the vibrating tamper, distributing the light tamping action uniformly over the surface of the layer in a regular pattern. The pressure of contact and the length of time of the vibrating action at each spot should not cause soil to escape from beneath the edges of the tamping foot, thus tending to loosen the layer. Make a sufficient number of coverages to produce maximum density, as evidenced by practically no visible motion of surface particles adjacent to the edges of the tamping foot.

6.5.2.2 *Compaction by Sliding Weight Tamper*—Compact each layer of soil thoroughly by tamping blows uniformly distributed over the surface of the layer. Adjust the height of drop and give sufficient coverages to produce maximum density, depending on the coarseness and gravel content of the soil.

6.5.2.3 *Compaction by Other Methods*—Compaction may be accomplished by other approved methods, such as by vibratory packer equipment, where care is taken to obtain a uniform specimen without segregation of particle sizes (see Test Method D 2049).

6.5.3 *Relative Density Intermediate Between 0 and 100 %*—By trial in a separate container of the same diameter as the permeability cylinder, adjust the compaction to obtain reproducible values of relative density. Compact the soil in the permeability cylinder by these procedures in thin layers to a height about 2.0 cm (0.80 in.) above the upper manometer outlet.

NOTE 3—In order to bracket, systematically and representatively, the relative density conditions that may govern in natural deposits or in compacted embankments, a series of permeability tests should be made to bracket the range of field relative densities.

6.6 *Preparation of Specimen for Permeability Test:*

6.6.1 Level the upper surface of the soil by placing the upper porous plate or screen in position and by rotating it gently back and forth.

6.6.2 Measure and record: the final height of specimen, $H_1 - H_2$, by measuring the depth, H_2, from the upper surface of the perforated top plate employed to measure H_1 to the top of the upper porous plate or screen at four symmetrically spaced points after compressing the spring lightly to seat the porous plate or screen during the measurements; the final weight of air-dried soil used in the test ($W_1 - W_2$) by

D 2434

PERMEABILITY TEST ON GRANULAR SOIL

Test No. Date of Test
Location of Sample Date Sampled Report
Boring— Sample— Depth—

(a) DESCRIPTION OF SOIL _____

MATERIALS USED: _____

(b) UNIT WEIGHT DETERMINATION:

Diameter, D, cm	Height Before, H_1	Weight Before, W_1
Area, A, cm^2	Height After, H_2	Weight After, W_2
Length, L, cm	Height Net, cm	Weight Net, g

	Moisture Content (air-dried)	_____
W (max)	Dry Unit Weight, lb/ft^3 W	_____
W (min)	Void Ratio, e	_____
	Relative Density, RD	_____

(c) PERMEABILITY TEST (DEGREE OF COMPACTNESS)

Test No.	Manometers		Head, h cm	Q cm^3	t s	Q/At	h/L	Temperature, °C	k cm/s
	H_1	H_2							
1									
2									
3									
4									
5									
6									

FIG. 3 Permeability Test Data Sheet

weighing the remainder of soil, W_2, left in the pan. Compute and record the unit weights, void ratio, and relative density of the test specimen.

6.6.3 With its gasket in place, press down the top plate against the spring and attach it securely to the top of the permeameter cylinder, making an air-tight seal. This satisfies the condition described in 3.1.1 of holding the initial density without significant volume change during the test.

6.6.4 Using a vacuum pump or suitable aspirator, evacuate the specimen under 50 cm (20 in.) Hg minimum for 15 min to remove air adhering to soil particles and from the voids. Follow the evacuation by a slow saturation of the specimen from the bottom upward (Fig. 2) under full vacuum in order to free any remaining air in the specimen. Continued saturation of the specimen can be maintained more adequately by the use of (*1*) de-aired water, or (*2*) water maintained in an in-flow temperature sufficiently high to cause a decreasing temperature gradient in the specimen during the test. Native water or water of low mineral content (Note 4) should be used for the test, but in any case the fluid should be described on the report form (Fig. 3). This satisfies the condition described in 3.1.2 for saturation of soil voids.

NOTE 4—Native water is the water occurring in the rock or soil *in situ*. It should be used if possible, but it (as well as de-aired water) may be a refinement not ordinarily feasible for large-scale production testing.

6.6.5 After the specimen has been saturated and the permeameter is full of water, close the bottom valve on the outlet tube (Fig. 2) and disconnect the vacuum. Care should be taken to ensure that the permeability flow system and the manometer system are free of air and are working satisfactorily. Fill the inlet tube with water from the constant-head tank by slightly opening the filter tank valve. Then connect the inlet tube to the top of the permeameter, open the inlet valve slightly and open the manometer outlet cocks slightly, to allow water to flow, thus freeing them of air. Connect the water manometer tubes to the manometer outlets and fill with water to remove the air. Close the inlet valve and open

the outlet valve to allow the water in the manometer tubes to reach their stable water level under zero head.

7. Procedure

7.1 Open the inlet valve from the filter tank slightly for the first run to conditions described in 3.1.3, delay measurements of quantity of flow and heat until a stable head condition without appreciable drift in water manometer levels is attained. Measure and record the time, t, head, h (the difference in level in the manometers), quantity of flow, Q, and water temperature, T.

7.2 Repeat test runs at heads increasing by 0.5 cm in order to establish accurately the region of laminar flow with velocity, v (where $v = Q/At$), directly proportional to hydraulic gradient, i (where $i = h/L$). When departures from the linear relation become apparent, indicating the initiation of turbulent flow conditions, 1-cm intervals of head may be used to carry the test run sufficiently along in the region of turbulent flow to define this region if it is significant for field conditions.

NOTE 5—Much lower values of hydraulic gradient, h/L, are required than generally recognized, in order to ensure laminar flow conditions. The following values are suggested: loose compactness ratings, h/L from 0.2 to 0.3, and dense compactness ratings, h/L from 0.3 to 0.5, the lower values of h/L applying to coarser soils and the higher values to finer soils.

7.3 At the completion of the permeability test, drain the specimen and inspect it to establish whether it was essentially homogeneous and isotropic in character. Any light and dark alternating horizontal streaks or layers are evidence of segregation of fines.

8. Calculations

8.1 Calculate the coefficient of permeability, k, as follows:

$$k = QL/Ath$$

where:

k = coefficient of permeability,
Q = quantity of water discharged,
L = distance between manometers,
A = cross-sectional area of specimen,
t = total time of discharge,
h = difference in head on manometers.

8.2 Correct the permeability to that for 20°C (68°F) by multiplying k (see 8.1) by the ratio of the viscosity of water at test temperature to the viscosity of water at 20°C (68°F).

9. Report

9.1 The report of permeability test shall include the following information:

9.1.1 Project, dates, sample number, location, depth, and any other pertinent information,

9.1.2 Grain size analysis, classification, maximum particle size, and percentage of any oversize material not used,

9.1.3 Dry unit weight, void ratio, relative density as placed, and maximum and minimum densities,

9.1.4 A statement of any departures from these test conditions, so the results can be evaluated and used,

9.1.5 Complete test data, as indicated in the laboratory form for test data (see Fig. 3), and

9.1.6 Test curves plotting velocity, Q/At, versus hydraulic gradient, h/L, covering the ranges of soil identifications and of relative densities.

The American Society for Testing and Materials takes no position respecting the validity of any patent rights asserted in connection with any item mentioned in this standard. Users of this standard are expressly advised that determination of the validity of any such patent rights, and the risk of infringement of such rights, are entirely their own responsibility.

This standard is subject to revision at any time by the responsible technical committee and must be reviewed every five years and if not revised, either reapproved or withdrawn. Your comments are invited either for revision of this standard or for additional standards and should be addressed to ASTM Headquarters. Your comments will receive careful consideration at a meeting of the responsible technical committee, which you may attend. If you feel that your comments have not received a fair hearing you should make your views known to the ASTM Committee on Standards, 1916 Race St., Philadelphia, PA 19103.

Los Alamos National Laboratory **Environmental Restoration Program** Standard Operating Procedure	No: LANL-ER-SOP-11.04 Rev: 0

Soil and Core pH

	(Print Name)	(Signature)	(Date)
Preparer:	Sandra E. Wagner	Sandra E. Wagner	11-26-91
Quality Review by:	Terry Morgan	Terry Morgan	12/13/91
Technical Review by:	Clarence J. Duffy	Clarence J. Duffy	12/19/91
QPPL Approval:	Karen L Warthen	Karen L Warthen	3/4/92
PM Approval:	Robert W Vocke	Robert W Vocke	3-4-92

Effective Date: 3.16.92

SOIL AND CORE pH

1.0 PURPOSE

This procedure describes the methods by which the pH of a soil is measured. This procedure can be used to determine the degree of acidity or alkalinity in soil materials which are suspended in water and a 0.01M calcium chloride solution, and it can be used to supplement soil-resistivity measurements and identify conditions under which the corrosion of metals in the soil may be sharply accentuated.

2.0 SCOPE

2.1 Applicability

This procedure is applicable for determining the soil pH when collecting or working with soil samples for the Environmental Restoration program.

2.2 Training

Field team members using this procedure must document that they have read and understand this procedure and the procedures in Section 1.0, General Instructions.

3.0 DEFINITIONS

There are no unique definitions in this procedure.

4.0 BACKGROUND AND/OR CAUTIONS

Refer to the attached ASTMs, and to the Site Health and Safety plan for hazards and/or cautions.

5.0 EQUIPMENT

Refer to the attached ASTMs.

6.0 PROCEDURE

Refer to the attached ASTMs.

The use of commercially available pH buffers and deionized water is acceptable in the procedures. Follow the manufacturer's instructions for calibration of the pH meters.

7.0 REFERENCES

The following procedures are directly associated with this procedure and should be reviewed prior to field operations:

ASTM STANDARD D4972-89. 1989. Standard Test Method for pH of Soils.

ASTM STANDARD D2976-71. 1971. Standard Test Method for pH of Peat Materials.

ASTM STANDARD G51-77. 1977. Standard Test Method for pH of Soils for Use in Corrosion Testing.

LANL-ER-SOPs in Section 1.0, General Instructions.

8.0 RECORDS

A Chain-of-Custody/Request for Analysis form (SOP-01.04) will be maintained and will document the following information:

- Field Sample Number
- Date and time collected
- Sample container volume and material
- Matrix (soil, sludge, sediment)
- Test method
- Solution the pH datum was taken from

The laboratory will report:

- pH datum recorded to the first decimal
- Lot and expiration date of calibration solutions used
- Calibration records
- Soil size fractions taken from other than the No. 10 sieve.

9.0 ATTACHMENTS

A. ASTM STANDARD D4972-89. 1989. Standard Test Method for pH of Soils.

B ASTM STANDARD D2976-71. 1971. Standard Test Method for pH of Peat Materials.

C. ASTM STANDARD G51-77. 1977. Standard Test Method for pH of Soils for Use in Corrosion Testing.

ASTM STANDARD D4972-89, STANDARD TEST METHOD FOR pH OF SOILS

Designation: D 4972 - 89

Standard Test Method for pH of Soils[1]

This standard is issued under the fixed designation D 4972; the number immediately following the designation indicates the year of original adoption or, in the case of revision, the year of last revision. A number in parentheses indicates the year of last reapproval. A superscript epsilon (ε) indicates an editorial change since the last revision or reapproval.

1. Scope

1.1 This test method covers the measurement of the pH of soils for uses other than for corrosion testing. Such measurements are used in the agricultural, environmental, and the natural resources fields. This measurement determines the degree of acidity or alkalinity in soil materials suspended in water and a 0.01 *M* calcium chloride solution. Measurement in both liquids are necessary to fully define the soil's pH. This variable is useful in determining the solubility of soil minerals, the mobility of ions in the soil, and assessing the viability of the soil-plant environment. A more detailed discussion of the usefulness of this parameter is not warranted here, however, it can be found in many discussions of the subject. A few such discussions are given as Refs **(1)**[2] through **(6)** at the end of the text.

1.2 The values given in SI units are regarded as standard.

1.3 *This standard may involve hazardous materials, operations, and equipment. This standard does not purport to address all of the safety problems associated with its use. It is the responsibility of the user of this standard to establish appropriate safety and health practices and determine the applicability of regulatory limitations prior to use.*

2. Referenced Documents

2.1 *ASTM Standards:*

C 670 Practice for Preparing Precision and Bias Statements for Test Methods of Construction Materials[3]

G 51 Test Method for pH of Soil for Use in Corrosion Testing[4]

3. Summary of Test Method

3.1 Measurement of the pH of soils in both suspensions of water and a calcium chloride solution are made with either a potentiometer using a pH sensitive electrode system (Method A), or pH sensitive paper (Method B). The potentiometer is calibrated with buffer solutions of known pH. The pH sensitive paper is a less accurate measurement and should only be used for a rough estimate of the soil pH. The electrode must be used for this measurement unless the pH sensitive paper is specified.

4. Significance and Use

4.1 The pH of the soil is a useful variable in determining the solubility of soil minerals, the mobility of ions in the soil, and assessing the viability of the soil-plant environment.

4.2 pH measurements are made in both water and a calcium chloride solution, because the calcium displaces some of the exchangeable aluminum. The low ionic strength counters the dilution effect on the exchange equilibrium by setting the salt concentration of the solution closer to that expected in the soil solution. The pH values obtained in the solution of calcium chloride are slightly lower than those measured in water due to the release of more aluminum ions which then hydrolyses. Therefore, both measurements are required to fully define the character of the soil's pH.

4.3 For the purpose of this test method the test soil must be sieved through a No. 10 sieve (2 mm sieve mesh openings). Measurements on soils or soil fractions having particle sizes larger than 2 mm by this test method may be invalid. If soil or soil fractions with particles larger than 2 mm are used, it must be stated in the report since the results may be significantly different.

4.4 All water used for this test method must be distilled and deionized.

5. Interferences

5.1 This test method as measured by a pH probe has possible interferences due to a suspension effect or sedimentation potential. Users interested in a detailed discussion of the mechanism of this effect can find it in Refs **(5)** and **(6)**.

5.2 This effect is the main reason Test Method G 51 can not be used for general measurement of pH outside of that for corrosion analysis. Test Method G 51 measures pH (an aqueous parameter) without adding any aqueous phase to the soil. This results in excessive soil particle-pH probe contact that over-estimates the activity of the hydrogen ions in solution and is therefore unacceptable for general soil analysis.

5.3 The suspension effect can be mitigated by careful attention to 9.1.

6. Apparatus

6.1 *Method A, pH Meter*—Potentiometer equipped with glass-calomel electrode system. Follow the manufacturer's instructions for the pH meter used. A silver/silver chloride electrode system or similar is also acceptable.

6.2 *Method B, pH Paper*—pH paper sensitive to a pH range from 1 to 12, with resolution to the nearest 0.2 pH unit.

7. Reagents

7.1 *Purity of Reagents*—Reagent grade chemicals should be used in all tests. Unless otherwise indicated, it is intended that all reagents should conform to the specifications of the

---

[1] This test method is under the jurisdiction of ASTM Committee D-18 on Soil and Rock and is the direct responsibility of Subcommittee D18.06 on Physico-Chemical Properties of Soils and Rocks.

Current edition approved Nov. 10, 1989. Published December 1989.

[2] The boldface numbers in parentheses refer to a list of references at the end of the test method.

[3] *Annual Book of ASTM Standards*, Vols 04.01, 04.02, 04.03, and 04.08.

[4] *Annual Book of ASTM Standards*, Vol 03.02.

Committee on Analytical Reagents of the American Chemical Society, where such specifications are available.[5] Other grades may be used, provided it is first ascertained that the reagent is of sufficient purity to permit its use without lessening the accuracy of the determination.

7.2 *Purity of Water*—Water should be distilled, deionized water, but not necessarily free of carbon dioxide. The pH of the water should be checked prior to testing the soil. Should it fall outside the range of 6.5 to 7.5, it should be discarded and other water obtained for the test.

7.3 *Acid Potassium Phthalate Buffer Solution* (0.05 *M*)—Dissolve 10.21 g (dried 1 h at 105°C) of potassium phthalate in water and dilute to 1 L. The pH of this solution should be 4.0 at 20°C. Protect the solution against evaporation and against contamination with molds. Replace the solution when mold is noticed. The effect of temperature is:

°C	pH
5 to 37	4.0

This illustrates that the pH of the solution does not change over the range in temperature from 5 to 37°C.

7.4 *Calcium Chloride Stock Solution* (1.0 *M*)—Dissolve 147 g of $CaCl_2 \cdot 2H_2O$ in water in a 1-L volumetric flask, cool, dilute to volume with water, and mix. Dilute 15 mL of this solution to 200 mL with water in a volumetric flask.

7.5 *Calcium Chloride Solution* (0.01 *M*)—Dilute 20.0 mL of stock 1.0 *M* $CaCl_2$ solution to 2 L with water. The pH of this solution should be between 5 and 7.

7.6 *Phosphate Buffer Solution* (0.025 *M*)—Dissolve 3.40 g of KH_2PO_4 and 3.55 g of Na_2HPO_4 in water and dilute to 1 L. Dry salts 2 h at 130°C before use. The pH of this solution should be 6.9 at 20°C. The effect of temperature is as follows:

°C	pH
0	7.0
10	6.9
20	6.9
30	6.8
40	6.8

8. Calibration of pH Meter

8.1 Calibrate the pH meter using the acid potassium phthalate and phosphate buffer solutions. Adjustment of the pH meter should follow the manufacturers direction.

9. Procedure

9.1 When making measurements with the pH electrode, place the electrode into the partially settled suspension to mitigate the suspension effect.

9.2 For both methods, begin with an air dried soil that has been sieved through a No. 10 sieve (2 mm holes) to remove the coarser soil fraction. Air drying the soil is necessary to accomplish sieving and to control the amount of water present at the time of measurement.

9.3 *pH in Distilled Water*—For both methods, weigh out approximately 10 g of air dried soil. Place the soil into a glass container and add approximately 10 mL of distilled water. Mix thoroughly and let stand for 1 h.

9.4 *Method A*—Read pH on pH meter.

9.5 *Method B*—Read pH on pH paper.

9.6 *pH in 0.01 M Calcium Chloride Solution*—For both methods weigh out approximately 10 g of air dried soil. Place the soil into a glass container and add approximately 10 mL of the 0.01 *M* $CaCl_2$ solution. Mix thoroughly and let stand for 1 h.

9.7 *Method A*—Read pH on pH meter.

9.8 *Method B*—Read pH on pH paper.

9.9 The mixture should be at approximately room temperature (15 to 25°C) at the time of pH measurement.

10. Report

10.1 Report the pH of the soil to the first decimal place. Specify which of the pH measurements is in water and which is in the calcium chloride solution. Also specify whether the determinations were made with Method A or Method B. If size fractions other than sieved through the No. 10 sieve are used, it must be stated in the report since the results may be significantly different.

11. Precision and Bias

11.1 *Precision:*

11.1.1 *Within-Laboratory Precision*—The within laboratory standard deviations for Method A are 0.031 (pH units) for the water mixture and 0.139[6] (pH units) for the calcium chloride mixture. Therefore, results of two properly conducted tests in the same or different laboratories should not differ by more than 0.065[6] (pH units) for the water mixture and 0.389 pH units for the calcium chloride mixture. The within-laboratory standard deviations for Method B are 0.189 (pH units) for the water mixture and 0.212[6] (pH units) for the calcium chloride mixture. Therefore, results of two properly conducted tests in the same or different laboratories should not differ by more than 0.53[6] (pH units) for the water mixture and 0.60 pH units for the calcium chloride mixture.

11.1.1.1 The precision of Method A presented was determined by the National Technical Center of the United States Department of Agriculture. In their evaluation they used 174 replicates for the water mixture and 32 replicates in testing the calcium chloride mixture.

11.1.1.2 The precision of Method B presented was determined by the United States Army Environmental Hygiene Agency. In their evaluation they used 25 replicates in testing each mixture.

11.1.2 *Between-Laboratory Precision*—The between-laboratory standard deviation has not been determined for either method. Subcommittee D18.06 is actively seeking data to evaluate the between laboratory precision of this test method.

11.2 *Bias*—There is no accepted reference value for this test method; therefore, bias cannot be determined.

12. Keywords

12.1 soil; pH; acidity; alkalinity; reaction

[5] "Reagent Chemicals, American Chemical Society Specifications," Am. Chemical Soc., Washington, DC. For suggestions on the testing of reagents not listed by the American Chemical Society, see "Reagent Chemicals and Standards, by Joseph Rosin, D. Van Nostrand Co., Inc., New York, NY, and the United States Pharmacopeia.

[6] These data satisfy the 1S and D2S requirements outlined in Practice C 670.

REFERENCES

(1) Garrels, R. M., and Christ, C. L., *Solutions, Minerals, and Equilibria*," Freeman Cooper, San Francisco, CA, 1965.
(2) Greenland, D. J., and Hayes, M. H. B., *The Chemistry of Soil Processes*, Wiley, NY, 1981.
(3) Sposito, G., *The Thermodynamics of Soil Solutions*, Clarendon, Oxford, 1981.
(4) Davies, J. T., and Rideal, E. K., *Interfacial Phenomena*, Academic, NY, 1963.
(5) Hunter, R. J., *Zeta Potential in Colloid Science*, Academic, NY, 1981.
(6) Perrin, D. D., and Dempsey, B., *Buffers for pH and Metal Ion Control*, Chapman and Hall, London, 1974.

The American Society for Testing and Materials takes no position respecting the validity of any patent rights asserted in connection with any item mentioned in this standard. Users of this standard are expressly advised that determination of the validity of any such patent rights, and the risk of infringement of such rights, are entirely their own responsibility.

This standard is subject to revision at any time by the responsible technical committee and must be reviewed every five years and if not revised, either reapproved or withdrawn. Your comments are invited either for revision of this standard or for additional standards and should be addressed to ASTM Headquarters. Your comments will receive careful consideration at a meeting of the responsible technical committee, which you may attend. If you feel that your comments have not received a fair hearing you should make your views known to the ASTM Committee on Standards, 1916 Race St., Philadelphia, PA 19103.

ASTM STANDARD D2976-71, STANDARD TEST METHOD FOR pH OF PEAT MATERIALS

Designation: D 2976 – 71 (Reapproved 1981)$^{\epsilon 1}$

Standard Test Method for pH of Peat Materials[1]

This standard is issued under the fixed designation D 2976; the number immediately following the designation indicates the year of original adoption or, in the case of revision, the year of last revision. A number in parentheses indicates the year of last reapproval. A superscript epsilon (ε) indicates an editorial change since the last revision or reapproval.

$^{\epsilon 1}$ NOTE—Footnote 2 and Section 9 were added editorially in May 1981.

1. Scope

1.1 This method[2] covers the electrometric measurement of the pH of peat materials. It is a means of expressing the degree of acidity or alkalinity of peat material suspended in water and 0.01 *M* calcium chloride solution.

2. Summary of Method

2.1 The electrometric measurement of the pH of peat in suspensions of water and calcium chloride solutions is made with a potentiometer using a glass-calomel electrode system, calibrated with buffers of known pH.

3. Significance

3.1 pH measurements are made in water and in calcium chloride solution because the pH readings in water can be modified by salts such as fertilizer material whereas the observed pH in calcium chloride solution is virtually independent of the initial amount of salts present in the soil. pH values obtained in calcium chloride solution usually run about a 0.5 to 0.8 pH unit lower than measurements in water due to release of more hydrogen ions by cation exchange.

4. Apparatus

4.1 *pH Meter*—Potentiometer equipped with glass-calomel electrode system. Follow the manufacturer's instructions for the pH meter used.

5. Reagents

5.1 *Purity of Reagents*—Reagent grade chemicals shall be used in all tests. Unless otherwise indicated, it is intended that all reagents shall conform to the specifications of the Committee on Analytical Reagents of the American Chemical Society, where such specifications are available.[3] Other grades may be used, provided it is first ascertained that the reagent is of sufficiently high purity to permit its use without lessening the accuracy of the determination.

5.2 *Purity of Water*—Water shall be carbon-dioxide-free distilled water. Use water with a pH of not less than 6.5 nor more than 7.5 obtained by boiling distilled water 15 min and cooling under carbon dioxide-free conditions.

5.3 *Acid Potassium Phthalate Buffer Solution* (0.05 *M*)—Dissolve 10.21 g (dried 1 h at 105°C) of potassium phthalate (NBS Standard Samples) in water and dilute to 1 L. Protect the solution against evaporation and contamination with molds. Replace the solution when mold is apparent. The effect of temperature is as follows:

°C	pH
5 to 24	4.00
25 to 33	4.01
34 to 37	4.02

5.4 *Calcium Chloride, Stock Solution* (1.0 *M*)—Dissolve 147 g of $CaCl_2 \cdot 2H_2O$ in distilled water in a 1-L volumetric flask, cool, dilute to volume with distilled water, and mix. Dilute 15 mL of this solution to 200 mL with distilled water in a volumetric flask, and standardize by titrating a 25-mL aliquot of the diluted solution with standard 0.1 *N* silver nitrate ($AgNO_3$) solution using 1 mL of 5 % potassium chromate (K_2CrO_4) solution as the indicator.

5.5 *Calcium Chloride Solution* (0.01 *M*)—Dilute 20.0 mL of stock 1.0 *M* $CaCl_2$ solution to 2 L with distilled water. The pH of this solution should be between 5 and 6.5.

5.6 *Phosphate Buffer Solution* (0.025 *M*)—Dissolve 3.40 g of KH_2PO_4 and 3.55 g of Na_2HPO_4 (NBS Standard Samples 186-I and II) in water and dilute to 1 L. Dry salts 2 h at 130°C before use. Effect of temperature on pH is:

°C	pH
0	6.98
10	6.92
20	6.88
30	6.85
40	6.83

6. Calibration of pH Meter

6.1 Calibrate the pH meter using the acid potassium phthalate and phosphate buffer solutions.

7. Procedure

7.1 *pH in Distilled Water*—Weigh out about 3 g of air-dried peat or about the equivalent amount of moist material. Place into a 100-mL beaker. Add 50 mL of distilled water. Additional water may be needed for very fibrous materials such as sphagnum moss peat. Let soak with occasional stirring for 30 min. Read on pH meter.

7.2 *pH in 0.01 M $CaCl_2$ Solution*—Weigh out about 3.0 g of air-dried peat or the equivalent amount of moist material. Place into a 100-mL beaker. Add 50 mL of 0.01 *M* $CaCl_2$

[1] This method is under the jurisdiction of ASTM Committee D-18 on Soil and Rock.

Effective Sept. 20, 1971.

[2] This method is currently undergoing an extensive review by ASTM Committee D-18 and additional alternative methods will be proposed.

[3] "Reagent Chemicals, American Chemical Society Specifications," Am. Chemical Soc., Washington, D.C. For suggestions on the testing of reagents not listed by the American Chemical Society, see "Reagent Chemicals and Standards," by Joseph Rosin, D. Van Nostrand Co., Inc., New York, N.Y., and the "United States Pharmacopeia."

solution. Let soak with an occasional stirring for 30 min. Read on pH meter.

8. Report

8.1 Report the pH of the peat to the first decimal place (0.1) and specify whether it is pH in distilled water or pH in calcium chloride solution.

9. Precision and Accuracy

9.1 The precision of this method has not yet been determined. Data are being sought that will be suitable for use in developing precision statements.

The American Society for Testing and Materials takes no position respecting the validity of any patent rights asserted in connection with any item mentioned in this standard. Users of this standard are expressly advised that determination of the validity of any such patent rights, and the risk of infringement of such rights, are entirely their own responsibility.

This standard is subject to revision at any time by the responsible technical committee and must be reviewed every five years and if not revised, either reapproved or withdrawn. Your comments are invited either for revision of this standard or for additional standards and should be addressed to ASTM Headquarters. Your comments will receive careful consideration at a meeting of the responsible technical committee, which you may attend. If you feel that your comments have not received a fair hearing you should make your views known to the ASTM Committee on Standards, 1916 Race St., Philadelphia, PA 19103.

ASTM STANDARD G51-77, STANDARD TEST METHOD FOR pH OF SOILS FOR USE IN CORROSION TESTING

Designation: G 51 - 77 (Reapproved 1984)

Standard Test Method for pH of Soil for Use in Corrosion Testing[1]

This standard is issued under the fixed designation G 51; the number immediately following the designation indicates the year of original adoption or, in the case of revision, the year of last revision. A number in parentheses indicates the year of last reapproval. A superscript epsilon (ε) indicates an editorial change since the last revision or reapproval.

1. Scope

1.1 This method covers the determination of soil pH. The principal use of the test is to supplement soil-resistivity measurements and thereby identify conditions under which the corrosion of metals in the soil may be sharply accentuated.

1.2 *This standard may involve hazardous materials, operations, and equipment. This standard does not purport to address all of the safety problems associated with its use. It is the responsibility of whoever uses this standard to consult and establish appropriate safety and health practices and determine the applicability of regulatory limitations prior to use.*

2. Apparatus

2.1 *pH Meters*—There are two types of meters: (*1*) potentiometric, which has a null indication, and (*2*) high-impedance amplifier type, which gives the pH directly (without null indication). Either meter is available as a portable, battery-powered unit so that it can be used in the field. The potentiometric meter is more accurate and generally more versatile.

2.2 *Calomel and Glass Electrodes*:

2.2.1 A saturated calomel reference electrode or its equivalent shall be used in the pH determination. A few crystals of solid potassium chloride should always be present within the chamber surrounding the calomel to assure that the solution is saturated under the conditions of use. The design of the electrode shall permit the formation of a fresh liquid junction between the solution of potassium chloride and the buffer or test soil for each test and shall allow traces of soil to be readily removed by washing.

2.2.2 A glass electrode of rugged construction is required. The pH response of the glass electrode shall be judged to be performing satisfactorily if it furnishes the correct pH value (±0.1 pH unit) for standard buffer solutions.

NOTE 1—These standards can be purchased from chemical supply companies or pH equipment manufacturers in tablet or powder form such that when added to a measured amount of distilled water, the desired standard buffer solution is obtained.

2.2.3 A combination electrode consisting of a saturated calomel reference electrode and a glass electrode (items 2.2.1 and 2.2.2) combined as a single electrode is acceptable. However, the requirements outlined above are equally applicable to the electrodes used in this combination unit.

2.3 *Subsurface Probe*—When pH measurements below the surface of the soil are required, it is necessary to use a probe of suitable length which will allow measurements to be made at the depth of interest. This probe consists of a glass electrode or a combination electrode in a rubber housing at the end of a plastic tube. One type of probe is illustrated in Fig. 1.

3. Procedure

3.1 *Test of Apparatus*—Prior to field use, or periodically when used extensively in the field, test the apparatus for linearity of response. This procedure is as follows:

3.1.1 Turn on the instrument, allow to warm up thoroughly, and bring to electrical balance in accordance with the manufacturer's instructions. Before use, clean and rinse the glass and calomel electrodes in distilled water.

NOTE 2—New glass electrodes and those that have been stored dry shall be conditioned in accordance with the manufacturer's recommendations before use.

3.1.2 At least two standard buffered pH solutions that span the soil pH to be measured are required. From practical experience standard solutions of pH 4, 7, and 8 are recommended. For the test, the temperature of these solutions shall not differ from each other by more than 5°C.

3.1.3 Adjust the temperature compensating dial on the pH meter to the standard solution temperature.

3.1.4 Immerse the electrodes in a small volume of the first known standard solution. Now adjust the meter to read this known pH by use of the "standardize" dial.

3.1.5 Remove the electrodes from the first standard solution, and rinse in distilled water. Immerse the electrodes in the second known standard solution. Judge the system to be operating satisfactorily if the reading obtained for the second standard agrees within 0.1 unit of the assigned pH.

3.2 *Standardization of pH Meter*—Standardize the pH meter immediately before use. If a series of measurements are to be made, supplement initial standardization by a check at intervals of about 30 min. Perform the meter standardization as follows:

3.2.1 Use a standard solution in the range of the pH of the soil to be tested, if such information is known beforehand. Otherwise, begin with a standard solution having a pH of 7. Stabilize the temperature of the solution so that it matches the temperature of the soil to within 10°C.

3.2.2 Immerse the electrodes in the known standard solution and adjust the meter to read this known pH, using the "standardize" dial.

3.3 *Soil Preparation for pH Determination*:

3.3.1 Ideally the pH measurement should be made in the field on undisturbed soil with the glass electrode contacting the soil at the specific depth of interest. If the surface soil pH

[1] This test method is under the jurisdiction of ASTM Committee G-1 on Corrosion of Metals, and is the direct responsibility of Subcommittee G01.10 on Corrosion in Soils.

Current edition approved Jan. 24, 1977. Published May 1977.

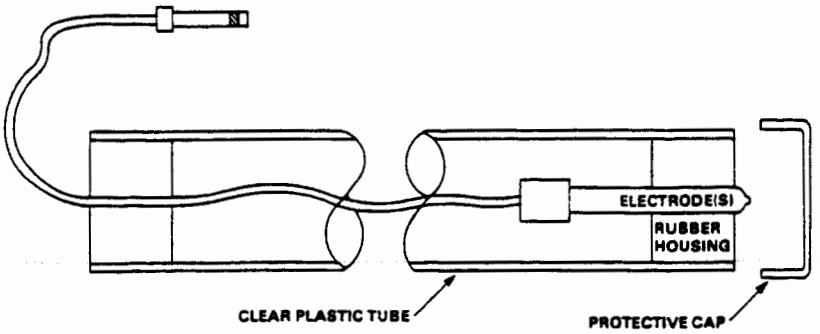

FIG. 1 Subsurface Probe.

is desired, then the soil can be broken up if compacted so as to accept the electrodes. If a subsurface pH is desired, then a boring or an excavation must be done so that the electrode can be placed in the soil at the desired depth. The subsurface probe (Fig. 1) is ideal for use with a boring tool such as a hand auger. After the boring is done, carefully lower the probe into the cavity without further preparation of the soil.

3.3.2 Soil samples can be brought to the surface with a boring tool or a post-hole digger, and the measurement made in the field on the soil thus obtained. This technique is less desirable than the probe method described above.

3.3.3 The least desirable pH measurement of soil is that which is based on a soil sample transported to a laboratory for evaluation. However, if this must be done, then make the pH measurement as quickly as possible after the soil is taken from the field. Place the sample in a clean, airtight, glass container or plastic bag so that the soil is not in contact with any metal. If the pH measurement is not made within 24 h from the time the soil sample is taken, then it is recommended that the soil sample be packed in dry ice to retard any change in pH due to chemical or biological reactions. Make the pH measurement on the soil at room temperature and as received.

3.3.3.1 The addition of water to the soil is not recommended for any case because some soils are so poorly buffered that added moisture will change their pH. However, if a soil is extremely dry with a resistivity exceeding 10^6 Ω-cm, a condition not likely to be encountered, then the pH measurement cannot and should not be made. This situation will manifest itself with a random drifting of the pH meter reading.

3.4 *Determination of pH of Soil*:

3.4.1 Complete the meter standardization procedure (3.2). The soil temperature shall match the temperature of the standardizing solution within 10°C. However, maintain the temperature compensating dial on the meter at the setting used for standardization.

3.4.2 Clean the electrode surface by washing with distilled water.

3.4.3 Press the contact area of the glass electrode or combination electrode, as the case may be, *against undisturbed soil* at the location of interest.

3.4.4 The reference electrode should be placed in contact with the soil near the glass electrode (this step is not required when using a combination-type electrode). An electrode separation of about 300 mm (1 ft) is suggested for surface measurements. For subsurface readings, the reference electrode may be placed on the surface about 300 mm from the bore hole entry.

3.4.5 With the electrode(s) in place, set the meter to read pH, allow a few minutes for equilibrium to be established, then take the meter reading.

3.4.6 After several minutes, repeat the meter reading. The values obtained should agree within 0.2 unit to be acceptable.

The American Society for Testing and Materials takes no position respecting the validity of any patent rights asserted in connection with any item mentioned in this standard. Users of this standard are expressly advised that determination of the validity of any such patent rights, and the risk of infringement of such rights, are entirely their own responsibility.

This standard is subject to revision at any time by the responsible technical committee and must be reviewed every five years and if not revised, either reapproved or withdrawn. Your comments are invited either for revision of this standard or for additional standards and should be addressed to ASTM Headquarters. Your comments will receive careful consideration at a meeting of the responsible technical committee, which you may attend. If you feel that your comments have not received a fair hearing you should make your views known to the ASTM Committee on Standards, 1916 Race St., Philadelphia, PA 19103.

Los Alamos National Laboratory **Environmental Restoration Program** Standard Operating Procedure	No: LANL-ER-SOP-11.05 Rev: 0

Total Organic Carbon

	(Print Name)	(Signature)	(Date)
Preparer:	Sandra Wagner	Sandra Wagner	11-26-91
Quality Review by:	Terry Morgan	Terry Morgan	12/13/91
Technical Review by:	Clarence J. Duffy	Clarence J. Duffy	12/19/91
QPPL Approval:	Karen L. Warthen	Karen L Warthen	3/4/92
PM Approval:	Robert W Vocke	Robert W Vocke	3-4-92

Effective Date: 3.16.92

TOTAL ORGANIC CARBON

1.0 PURPOSE

This procedure describes the method of determining the ash content and the total organic carbon of soil samples by air drying, heating within an oven or furnace, or a combination thereof.

2.0 SCOPE

2.1 Applicability

This procedure is applicable to all personnel determining total organic content for the Environmental Restoration program.

2.2 Training

Field team members using this procedure must document that they have read and understand this procedure and the procedures in Section 1.0, General Instructions.

3.0 DEFINITIONS

There are no unique definitions in this procedure.

4.0 BACKGROUND AND/OR CAUTIONS

Refer to the attached ASTM standard method D2974-87 and to the Site Health and Safety plan for hazards and/or cautions.

5.0 EQUIPMENT

Refer to the attached ASTM standard method D2974-87.

6.0 PROCEDURE

Refer to the attached ASTM standard method D2974-87.

7.0 REFERENCES

The following procedures are directly associated with this procedure and should be reviewed prior to field operation:

ASTM STANDARD D2974-87. 1987. Standard Test Method for Moisture, Ash, and Organic Matter of Peat and Other Organic Soils.

LANL-ER-SOPs in Section 1.0, General Instructions.

8.0 RECORDS

The records generated by this procedure will include the Chain-of-Custody/Request for Analysis form (SOP-01.04) which will include sample collection information logs, and calculations. Also included will be the laboratory report with written calculations, furnace temperature, and whether moisture contents are by proportion of as-received mass (wet mass) or by oven-dried mass.

9.0 ATTACHMENTS

A. ASTM STANDARD D2974-87. 1987. Standard Test Method for Moisture, Ash, and Organic Matter of Peat and Other Organic Soils.

ASTM STANDARD D2974-87, STANDARD TEST METHOD FOR MOISTURE, ASH, AND ORGANIC MATTER OF PEAT AND OTHER ORGANIC SOILS

Designation: D 2974 - 87

Standard Test Methods for Moisture, Ash, and Organic Matter of Peat and Other Organic Soils[1]

This standard is issued under the fixed designation D 2974; the number immediately following the designation indicates the year of original adoption or, in the case of revision, the year of last revision. A number in parentheses indicates the year of last reapproval. A superscript epsilon (ε) indicates an editorial change since the last revision or reapproval.

1. Scope

1.1 These test methods cover the measurement of moisture content, ash content, and organic matter in peats and other organic soils, such as organic clays, silts, and mucks.

1.2 The values stated in SI units are to be regarded as the standard.

1.3 *This standard may involve hazardous materials, operations, and equipment. This standard does not purport to address all of the safety problems associated with its use. It is the responsibility of the user of this standard to establish appropriate safety and health practices and determine the applicability of regulatory limitations prior to use.*

2. Summary of Methods

2.1 *Method A*—Moisture is determined by drying a peat or organic soil sample at 105°C. The moisture content is expressed either as a percent of the oven dry mass or of the as-received mass.

2.2 *Method B*—This is an alternative moisture method which removes the total moisture in two steps: (*1*) evaporation of moisture in air at room temperature (air-drying), and (*2*) the subsequent oven drying of the air-dried sample at 105°C. This method provides a more stable sample, the air-dried sample, when tests for nitrogen, pH, cation exchange, and the like are to be made.

2.3 *Methods C and D*—Ash content of a peat or organic soil sample is determined by igniting the oven-dried sample from the moisture content determination in a muffle furnace at 440°C (Method C) or 750°C (Method D). The substance remaining after ignition is the ash. The ash content is expressed as a percentage of the mass of the oven-dried sample.

2.4 Organic matter is determined by subtracting percent ash content from one hundred.

3. Apparatus

3.1 *Oven*, capable of being regulated to a constant temperature of 105 ± 5°C.

NOTE—The temperature of 105°C is quite critical for organic soils. The oven should be checked for "hot spots" to avoid possible ignition of the specimen.

3.2 *Muffle Furnace*, capable of producing constant temperatures of 440°C and 750°C.

3.3 *Evaporating Dishes*, of high silica or porcelain of not less than 100-mL capacity.

3.4 *Blender*, high-speed.

3.5 *Aluminum Foil*, heavy-duty.

3.6 *Porcelain Pan, Spoons*, and equipment of the like.

3.7 *Desiccator*.

4. Preparation of Sample

4.1 Place a representative field sample on a square rubber sheet, oil cloth, or equivalent material. Reduce the sample to the quantity required by quartering and place in a moisture-proof container. Work rapidly to prevent moisture loss or perform the operation in a room with a high humidity.

MOISTURE CONTENT

5. Method A

5.1 Record to the nearest 0.01 g the mass of a high silica or porcelain evaporating dish fitted with a heavy-duty aluminum foil cover. The dish shall have a capacity of not less than 100 mL.

5.2 Mix thoroughly the representative sample and place a test specimen of at least 50 g in the container described in 5.1. Crush soft lumps with a spoon or spatula. The thickness of peat in the container should not exceed 3 cm.

5.3 Cover immediately with the aluminum foil cover and record the mass to the nearest 0.01 g.

5.4 Dry uncovered for at least 16 h at 105°C or until there is no change in mass of the sample after further drying periods in excess of 1 h. Remove from the oven, cover tightly, cool in a desiccator, and record the mass.

6. Method A Calculation

6.1 Calculate the moisture content as follows:

$$\text{Moisture Content, \%} = [(A - B) \times 100]/A$$

where:

A = mass of the as-received test specimen, g, and
B = mass of the oven-dried specimen, g.

6.1.1 This calculation is used primarily for agriculture, forestry, energy, and horticultural purposes and the result should be referred to as the moisture content as a percentage of as-received or total mass.

6.2 An alternative calculation is as follows:

$$\text{Moisture Content, \%} = [(A - B) \times 100]/B$$

where:

A = as-received test specimen, g, and
B = mass of the oven-dried specimen, g.

[1] These test methods are under the jurisdiction of ASTM Committee D-18 on Soil and Rock and are the direct responsibility of Subcommittee D18.18 on Peats and Related Materials.

Current edition approved May 29, 1987. Published July 1987. Originally published as D 2974 - 71. Last previous edition D 2974 - 84.

6.2.1 This calculation is used primarily for geotechnical purposes and the result should be referred to as the moisture content as a percentage of oven-dried mass.

6.3 Take care to indicate the calculation method used.

7. Method B

7.1 This method should be used if pH, nitrogen content, cation exchange capacity, and the like are to be tested.

7.2 Mix the sample thoroughly and select a 100 to 300 g representative sample. Determine the mass of this sample and spread evenly on a large flat pan. Crush soft lumps with a spoon or spatula and let the sample come to moisture equilibrium with room air. This will require at least 24 h. Stir occasionally to maintain maximum air exposure of the entire sample. When the mass of the sample reaches a constant value, calculate the moisture removed during air drying as a percentage of the as-received mass.

7.3 Grind a representative portion of the air-dried sample for 1 to 2 min in a high-speed blender. Use the ground portion for moisture, ash, nitrogen, cation exchange capacity tests, and the like.

7.4 Thoroughly mix the air-dried, ground sample. Weigh to the nearest 0.01 g the equivalent of 50 g of test specimen on an as-received basis. Determine the amount, in grams, of air-dried sample equivalent to 50 g of as-received sample, as follows:

$$\text{Equivalent Sample Mass, g} = 50.0 - [(50 \times M)/100]$$

where:

M = moisture removed in air drying, %.

7.5 Place the sample in a container as described in 5.1 and proceed as in Method A.

8. Method B Calculation

8.1 Calculate the moisture content as follows:

$$\text{Moisture Content, \%} = (50 - B) \times 2$$

where:

B = oven-dried sample, g.

8.1.1 This calculation gives moisture content as a percentage of as-received mass.

8.2 An alternative calculation is as follows:

$$\text{Moisture Content, \%} = [(50 - B) \times 100]/B$$

8.2.1 This calculation gives moisture content as a percentage of oven-dried mass.

ASH CONTENT

9. Method C

9.1 Determine the mass of a covered high-silica or porcelain dish.

9.2 Place a part of or all of the oven-dried test specimen from a moisture determination in the dish and determine the mass of the dish and specimen.

9.3 Remove the cover and place the dish in a muffle furnace. Gradually bring the temperature in the furnace to 440°C and hold until the specimen is completely ashed (no change of mass occurs after a further period of heating).

9.4 Cover with the retained aluminum foil cover, cool in a desiccator, and determine the mass.

9.5 This method should be used for all geotechnical and general classification purposes.

10. Method D

10.1 Determine the mass of a covered high-silica or porcelain dish.

10.2 Place a part of or all of the oven-dried test specimen from a moisture determination in the dish and determine the mass of the dish and specimen.

10.3 Remove the cover and place the dish in a muffle furnace. Gradually bring the temperature in the furnace to 750°C and hold until the specimen is completely ashed (no change of mass occurs after a further period of heating).

10.4 Cover with the retained aluminum foil cover, cool in a desiccator, and determine the mass.

10.5 This method should be used when peats are being evaluated for use as a fuel.

11. Calculation for Methods C and D

11.1 Calculate the ash content as follows:

$$\text{Ash Content, \%} = (C \times 100)/B$$

where:

C = ash, g, and

B = oven-dried test specimen, g.

ORGANIC MATTER

12. Calculation

12.1 Determine the amount of organic matter by difference, as follows:

$$\text{Organic matter, \%} = 100.0 - D$$

where:

D = ash content, %.

13. Report

13.1 Report the following information:

13.1.1 Results for organic matter and ash content, to the nearest 0.1 %.

13.1.2 Furnace temperature used for ash content determinations.

13.1.3 Whether moisture contents are by proportion of as-received mass or oven-dried mass.

13.1.3.1 Express results for moisture content as a percentage of as-received mass to the nearest 0.1 %.

13.1.3.2 Express results for moisture content as a percentage of oven-dried mass as follows:

(*a*) Below 100 % to the nearest 1 %.

(*b*) Between 100 % and 500 % to the nearest 5 %.

(*c*) Between 500 % and 1000 % to the nearest 10 %.

(*d*) Above 1000 % to the nearest 20 %.

14. Precision and Bias

14.1 The precision and bias of these test methods have not been determined. Data are being sought for use in developing a precision and bias statement.

D 2974

The American Society for Testing and Materials takes no position respecting the validity of any patent rights asserted in connection with any item mentioned in this standard. Users of this standard are expressly advised that determination of the validity of any such patent rights, and the risk of infringement of such rights, are entirely their own responsibility.

This standard is subject to revision at any time by the responsible technical committee and must be reviewed every five years and if not revised, either reapproved or withdrawn. Your comments are invited either for revision of this standard or for additional standards and should be addressed to ASTM Headquarters. Your comments will receive careful consideration at a meeting of the responsible technical committee, which you may attend. If you feel that your comments have not received a fair hearing you should make your views known to the ASTM Committee on Standards, 1916 Race St., Philadelphia, PA 19103.

Los Alamos National Laboratory **Environmental Restoration Program** Standard Operating Procedure	No: LANL-ER-SOP-11.06 Rev: 0

Cation-Exchange Capacity

	(Print Name)	(Signature)	(Date)
Preparer:	Sandra E. Wagner	Sandy E. Wagner	11-26-91
Quality Review by:	Terry Morgan	Terry Morgan	12/12/91
Technical Review by:	Clarence J. Duffy	Clarence J. Duffy	12/19/91
QPPL Approval:	Karen L Warthen	Karen L Warthen	3/4/92
PM Approval:	Robert W Vocke	Robert W Vocke	3-4-92

Effective Date: 3-16-92

CATION-EXCHANGE CAPACITY

1.0 PURPOSE

This procedure describes methods that can be used to determine the cation-exchange capacity of soils.

2.0 SCOPE

2.1 Applicability

This procedure can be used for determining the cation-exchange capacity of most soils including calcareous and noncalcareous soils for the Environmental Restoration program

2.2 Training

Field team members using this procedure must document that they have read and understand this procedure and the procedures in Section 1.0, General Instructions.

3.0 DEFINITIONS

There are no unique definitions in this procedure.

4.0 BACKGROUND AND/OR CAUTIONS

Refer to the attached SW-846 method, and to the Site Health and Safety plan for hazards and/or cautions.

5.0 EQUIPMENT

Refer to the attached SW-846 method.

6.0 PROCEDURE

Refer to the attached SW-846 method.

7.0 REFERENCES

The following procedures are directly associated with this procedure and should be reviewed prior to field operations:

EPA SW-846. September 1986. Method 9081 - Cation-Exchange Capacity of Soils (Sodium Acetate).

LANL-ER-SOPs in Section 1.0, General Instructions.

8.0 RECORDS

The following information will be documented on a Chain-of-Custody/Request for Analysis form or a Daily Activity Log (SOP-01.04) as appropriate:

- Field Sample Number/Identification
- Date and time collected
- Sample container material and size
- Matrix (soil, Lithologic material)
- Test method requested
- Lot and calibration date of calibration solutions used
- pH calibration
- Results from atomic absorption or emission spectroscopy
- Deviations, if applicable

9.0 ATTACHMENTS

A. EPA SW-846, September 1986. Method 9081 - Cation-Exchange Capacity of Soils (Sodium Acetate).

EPA SW-846, METHOD 9081
CATION-EXCHANGE CAPACITY OF SOILS (SODIUM ACETATE)

METHOD 9081

CATION-EXCHANGE CAPACITY OF SOILS (SODIUM ACETATE)

1.0 SCOPE AND APPLICATION

1.1 Method 9081 is applicable to most soils, including calcareous and noncalcareous soils. The method of cation-exchange capacity by summation (Chapman, 1965, p. 900; see Paragraph 10.1) should be employed for distinctly acid soils.

2.0 SUMMARY OF METHOD

2.1 The soil sample is mixed with an excess of sodium acetate solution, resulting in an exchange of the added sodium cations for the matrix cations. Subsequently, the sample is washed with isopropyl alcohol. An ammonium acetate solution is then added, which replaces the adsorbed sodium with ammonium. The concentration of displaced sodium is then determined by atomic absorption, emission spectroscopy, or an equivalent means.

3.0 INTERFERENCES

3.1 Interferences can occur during analysis of the extract for sodium content. Thoroughly investigate the chosen analytical method for potential interferences.

4.0 APPARATUS AND MATERIALS

4.1 Centrifuge tube and stopper: 50-mL, round-bottom, narrow neck.

4.2 Mechanical shaker.

4.3 Volumetric flask: 100-mL.

5.0 REAGENTS

5.1 Sodium acetate (NaOAc), 1.0 N: Dissolve 136 g of $NaC_2H_2O_2 \cdot 3H_2O$ in water and dilute it to 1,000 mL. The pH of this solution should be 8.2. If needed, add a few drops of acetic acid or NaOH solution to bring the reaction of the solution to pH 8.2.

5.2 Ammonium acetate (NH_4OAc), 1 N: Dilute 114 mL of glacial acetic acid (99.5%) with water to a volume of approximately 1 liter. Then add 138 mL of concentrated ammonium hydroxide (NH_4OH) and add water to obtain a volume of about 1,980 mL. Check the pH of the resulting solution, add more NH_4OH, as needed, to obtain a pH of 7, and dilute the solution to a volume of 2 liters with water.

5.3 Isopropyl alcohol: 99%.

6.0 SAMPLE COLLECTION, PRESERVATION, AND HANDLING

6.1 All samples must be collected using a sampling plan that addresses the considerations discussed in Chapter Nine of this manual.

7.0 PROCEDURE

7.1 Weigh 4 g of medium- or fine-textured soil or 6 g of coarse-textured soil and transfer the sample to a 50-mL, round-bottom, narrow-neck centrifuge tube. (A fine soil has >50% of the particles <0.074 mm, medium soil has >50% >0.425 mm, while a coarse soil has more than 50% of its particles >2 mm.

7.2 Add 33 mL of 1.0 N NaOAc solution, stopper the tube, shake it in a mechanical shaker for 5 min, and centrifuge it until the supernatant liquid is clear.

7.3 Decant the liquid, and repeat Paragraph 7.2 three more times.

7.4 Add 33 mL of 99% isopropyl alcohol, stopper the tube, shake it in a mechanical shaker for 5 min, and centrifuge it until the supernatant liquid is clear.

7.5 Repeat the procedure described in Paragraph 7.4 two more times.

7.6 Add 33 mL of NH_4OAc solution, stopper the tube, shake it in a mechanical shaker for 5 min, and centrifuge it until the supernatant liquid is clear. Decant the washing into a 100-mL volumetric flask.

7.7 Repeat the procedure described in Paragraph 7.6 two more times.

7.8 Dilute the combined washing to the 100-mL mark with ammonium acetate solution and determine the sodium concentration by atomic absorption, emission spectroscopy, or an equivalent method.

8.0 QUALITY CONTROL

8.1 All quality control data should be maintained and available for easy reference or inspection.

8.2 Employ a minimum of one blank per sample batch to determine if contamination or any memory effects are occurring.

8.3 Materials of known cation-exchange capacity must be routinely analyzed.

9.0 METHOD PERFORMANCE

9.1 No data provided.

10.0 REFERENCES

10.1 This method is based on Chapman, H.D., "Cation-exchange Capacity," pp. 891-900, in C.A. Black (ed.), Method of Soil Analysis, Part 2: Chemical and Microbiological Properties, Am. Soc. Agron., Madison, Wisconsin (1965).

METHOD 9081

CATION-EXCHANGE CAPACITY OF SOILS (SODIUM ACETATE)

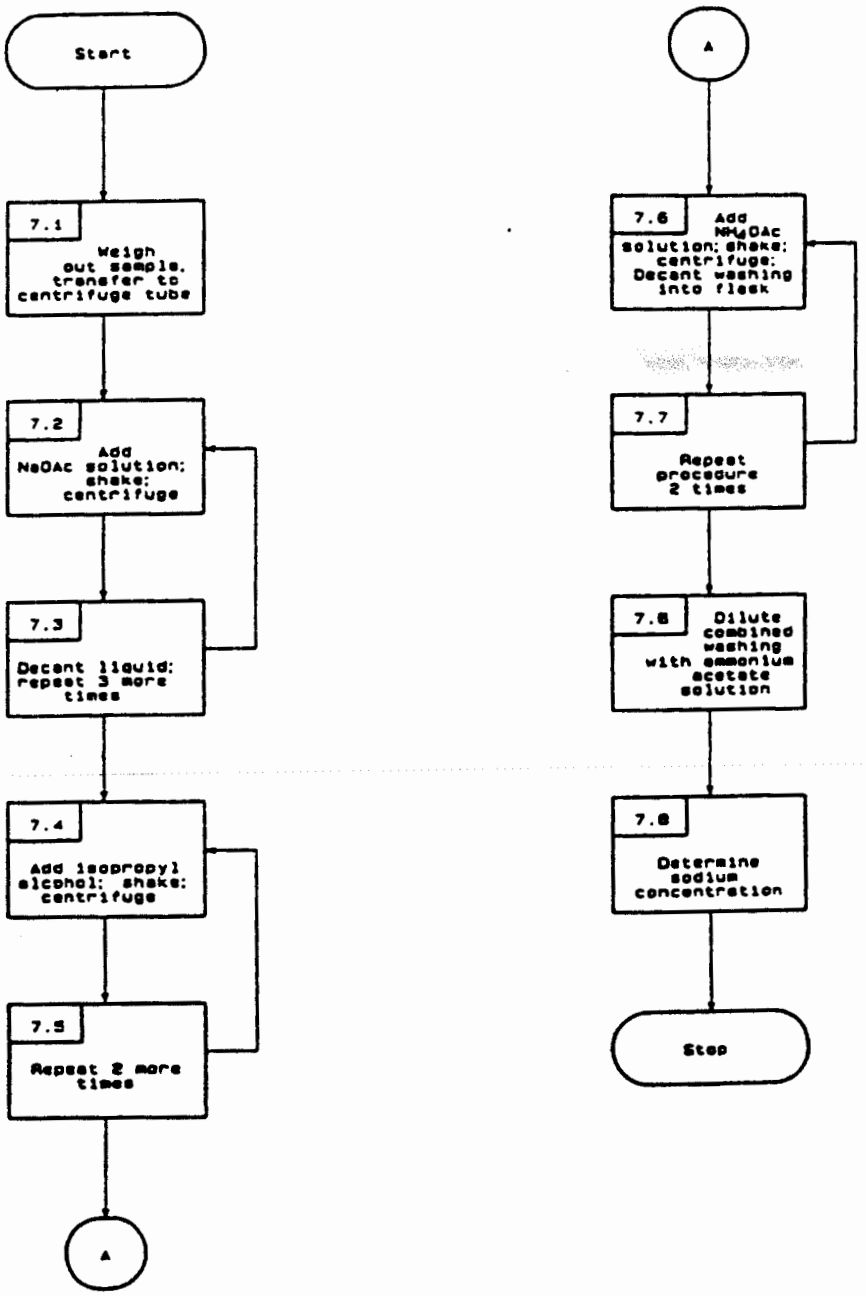

Los Alamos National Laboratory **Environmental Restoration Program** Standard Operating Procedure	No: LANL-ER-SOP-12.01 Rev: 0

Field Logging, Handling, and Documentation of Borehole Materials

	(Print Name)	(Signature)	(Date)
Prepared by	E. Dow Davidson, Jr.		03 FEB 1993
Quality Review by	Larry Maassen	Larry Maassen	5 April 1993
Technical Review by	Sue J. Goff		March 30, 1993
PM Approval	Robert W. Vocke		
QPPL Approval	A.E. Norris	A.E. Norris	June 21, 1993

Effective Date: June 25, 1993

FIELD LOGGING, HANDLING, AND DOCUMENTATION OF BOREHOLE MATERIALS

Contents

1.0 PURPOSE 2

2.0 SCOPE 2
- 2.1 Applicability 2
- 2.2 Training 2

3.0 DEFINITIONS 2

4.0 BACKGROUND AND CAUTIONS 3

5.0 EQUIPMENT 4

6.0 PROCEDURES 4
- 6.1 Sample Staging 4
- 6.2 Removal of Time Sensitive Analytical Samples From the Drill Site 6
- 6.3 Core Handling In the Sample Management Trailer by Sample 7
- 6.4 Marking Core (Depth Notation, and Orientation Stripes) 8
- 6.5 Videograhic Documentation 8
- 6.6 Core Logging 9
- 6.7 Core Box Loading and Storing 9
- 6.8 Cuttings Handling Procedure 10

7.0 REFERENCES 11

8.0 RECORDS 11

9.0 ATTACHMENTS 12

FIELD LOGGING, HANDLING, AND DOCUMENTATION OF BOREHOLE SAMPLES

1.0 PURPOSE

This procedure provides instructions for field logging, documentation, and handling of borehole materials. The implementation of this procedure ensures that borehole samples will be correctly identified and the data derived from samples will be traceable back to the origination in the field.

2.0 SCOPE

This procedure includes activities required to collect, describe, document and temporarily store Environmental Restoration (ER) borehole materials (core, cuttings) at operable unit (OU) drill sites.

2.1 Applicability

This procedure applies to sample management site workers performing collection, field logging, documentation, and packaging of borehole materials as specified in site specific Resource Conservation and Recovery Act Facility Investigation (RFI) work plans.

2.2 Training

Sample management site workers will be trained to this procedure before conducting work and will document they have read and do understand this procedure and procedures outlined in Section 1.0, General Instructions. Sample management site workers performing structural and lithologic logging of core must hold a minimum of a Bachelor's degree in Geology or the Earth Sciences.

3.0 DEFINITIONS

A. Core: A core is a cylindrical section of rock, or fragment thereof, that is taken as a sample of the interval penetrated by a core bit and that is brought to the surface for examination and/or analysis.

B. Core Run: A core run is an attempt to drill and recover a length of core; also the piece of core recovered from a core barrel during the core run.

C. Sample Management: The collection, documentation, storage and control of selected borehole materials and the records generated as a result of these activities. The Subsurface Technologies TTL is responsible for overseeing sample management at the drill site.

D. Cuttings: Cuttings are chips of rock produced during drilling that are removed from the borehole by circulation of drilling fluids (gas, foam, or liquid).

E. Daily Drilling Summary: The Daily Drilling Summary is a primary record of daily drill-site activity. The Field Team Leader (FTL) is responsible for keeping a chronological record of activities (using a 24-hour time clock) that occur during drill-site operations. An example can be found in LANL-ER-SOP-4.01, Drilling Methods and Drill-Site Management.

F. Drilling Package: A Drilling Package is prepared for each OU and includes the general and detailed requirements for performing drilling and associated activities. The Drilling Package consists of a detailed Drilling Plan, drilling specifications, Curation Plan, and Geophysical Logging Plan and specifications to meet the sampling requirements defined in individual RFI Work Plans.

H. Fluids: Fluids collected as samples include gases and liquids.

I. Rubble: Rubble is defined as pieces of core with diameters smaller than half the diameter of whole core such that reconstruction between individual pieces is not possible.

J. Sample: A sample is a physical entity, collected in the field, representative of the whole, that is the original source material for all subsequent analyses and testing activities.

K. Specimen: A specimen is a subsection or portion which has been removed from a sample that undergoes testing, analysis, or other technical or scientific evaluation. It is also referred to as an analytical sample.

4.0 BACKGROUND AND CAUTIONS

This procedure is limited to the activities necessary to take custody of core and cuttings from drill rig personnel, remove time sensitive analytical samples, complete photo documentation, perform field structural and lithologic description, and mark, package, and temporarily store the borehole materials at a drill site Sample Management Trailer. This procedure does not address the collection of soil, rock, or fluid samples exclusively for field monitoring or laboratory analysis for hazardous or radiological waste. Analytical sample containers and preservation and will be coordinated with the Sample Coordination Facility (SCF).

This procedure prescribes the specific sample management methods to be followed and documentation to be prepared during handling and field logging of borehole materials identified in the site Curation Plan. A copy of this procedure with supporting references and forms will be available at the drill site at all times. Forms may be obtained from the Subsurface Technologies Technical Team Leader (TTL). The OU-specific Drilling Package and Sampling and Analysis Plan (SAP) will also be available at the drill-site.

The requirements of this procedure are subject to modification depending on the exact nature of the borehole being drilled, as delineated in a Drilling Package. Borehole

materials temporarily stored at the Sample Management Trailer will be maintained in environmental conditions as defined in the relevant Curation Plan for each OU. Sample management site workers will be familiar with the site specific Health and Safety Plan and will participate in all site pre-entry and safety meetings.

The site-specific Health and Safety Plan will function as the document defining the types and extent of monitoring activities to be performed before, during, and after borehole material collection and processing activities.

Before drilling operations, a Sample Management Trailer will be set up at the drill site. Copies of the Drilling Package, reference materials, applicable procedures, and an adequate quantity of documentation forms will be available in the trailer.

5.0 EQUIPMENT

Sample management field equipment will be assembled before initiation of field activities. The Sample Management Trailer will contain the following equipment: desk, core racks, core transport trays, work table, photography apparatus, and container labeling and packaging equipment. The unit will be well-lighted and will be heated and/or air-conditioned, if necessary. The unit will be secure and operated as a limited access facility.

The equipment and supplies to be used are listed in Attachment A.

6.0 PROCEDURES

6.1 Sample Staging

This procedure controls the sample management site worker's handling of the core from the time the core is withdrawn from the outer drill tube until the core is transported to the ER program Sample Management Facility (SMF). For the purposes of this SOP, core may also refer to other solid samples, such as drive samples, or augered samples. These activities will be performed under the direction of the FTL and the TTL. The number of sample management site workers involved in handling the core inner tubes will be kept to a minimum.

Core handling procedures will be performed in sequential order. Any deviation from this procedure or from the Curation Plan requires prior consultation and agreement with the Operational Unit Project Leader (OUPL), the FTL, and the TTL. Deviations and the rationale for changes in methods will be recorded on the Daily Drilling Summary.

Personal protective gear will be worn as outlined in the site specific Health and Safety Plan. All personnel handling the cores and other samples shall wear the required protection.

The driller will collect the core (or other sample form) according to drilling methods outlined in the Drilling Package, withdraw the sample from the borehole, and give it

to the HS-1 and HS-5 technicians for radioactive/hazardous constituent screening before the inner tube assembly has been removed from the outer tube assembly.

A comparison will be made with the action levels for radiation and organic vapors established in the site Health and Safety Plan. If readings indicate activity or concentrations above action levels, then sample handling activities will temporarily be suspended. A decision will be made by the Site Safety Officer (SSO) and FTL as to restarting work with upgraded personal protective equipment, modification of the level of logging required in this procedure, or other means to ensure the health and safety of workers.

If action levels are not exceeded, the inner tube assembly is removed from the outer tube assembly.

Personnel handling the samples will use new clean gloves each time a core tube is handled. Drill rig personnel will lower the inner tube or sampler on to new plastic sheeting, located on a work bench in the Exclusion Zone. They will then place the core in a core transport tray.

1. Sample management site workers will obtain run information (Run Number, Depth Interval) from the driller. The driller will provide the information on a run (4" x 6") index card. Sample management site workers will place the run card at the top end of the core in the core trough.

2. The core will then be transferred to the Sample Management Trailer. Sample management site workers will carry the core transport tray to the trailer and place in a core rack.

If an inner tube liner (e.g., lexan) is used, the following steps will apply:

1. Place the inner tube liner in the core transport tray.

2. Place and seal caps on the top and bottom of the liner using electrical or duct tape.

3. Sample management site workers will obtain run information (Run Number, Depth Interval) from the driller. The driller will provide the information on a run (4" x 6") index card. Place the run card at the top end of the core in the core transport tray.

4. Sample management site workers will mark one end of the liner to designate top of the run, ensuring that the run will not be switched end-for-end during transfer to the Sample Management Trailer.

5. The core will then be transferred to the Sample Management Trailer. Sample management site workers will carry the core inner liner to the trailer and place in a core rack.

6.2 Removal of Time Sensitive Analytical Samples From the Drill Site

Many time sensitive analyses require that analytical samples be collected, containerized, and preserved soon after the borehole materials are brought to the surface. The requirement for the removal of analytical samples directly from the drill site versus from the SMF will be delineated in the site specific Curation Plan.

In order to establish the correct origination point for the analytical samples the core will be measured, marked, photographed, and logged before the removal of any analytical samples. No core will be removed from the field before it has been marked and photographed unless specifically called for in the Curation Plan. Individual sections of a core that contain time sensitive analytical samples will be temporarily packaged immediately after the core run has been moved to the Sample Management Trailer.

Prior to the analytical samples being removed from the drill site, sample management site workers will complete the Field Analytical Sample Removal Checklist (Attachment B). This checklist will be used in addition to a Chain-of-Custody/Request for Analysis form for transfer of analytical samples from sample management site workers to the SCF.

The following steps outline the procedure for removal of analytical samples from the drill site:

1. Evaluate the list of requested intervals or features from the Curation Plan.

2. Temporarily package individual sections of core containing analytical samples that would suffer damage if left exposed while awaiting measuring, photography, marking, and logging.

3. Clean, measure, mark, photograph, and log core.

4. Affix a unique sample sticker to the analytical sample (if possible) and to the packaging material containing the analytical sample.

5. The core may need to be broken or cut to retrieve a portion for an analytical sample.

6. Remove the analytical sample and place a foam marker at the location from which the sample portion was removed. The foam marker will be labeled with borehole ID, interval, date, recipient, and organization where the analytical sample is to be sent.

7. Field screen the individual analytical samples for the levels of hazardous or radioactive contamination.

8. Release the analytical sample(s) to EM-9 personnel who will package and ship the analytical samples according to LANL-ER-SOP-1.02, Sample

Containers and Preservation; and SOP-1.03, Handling, Packaging and Shipping of Samples. Document the process according to SOP-1.04, Sample Control and Field Documentation.

6.3 Core Handling In the Sample Management Trailer by Sample Management Site Workers

Cleaning

Clean cores according to instructions contained in the Curation Plan (if called for), exercising caution to avoid disturbing unconsolidated zones.

Measurement of Run Interval

A polystyrene foam run marker (Attachment C) replaces the driller's run card at the top of the run.

Starting at the top of the core run, fit pieces of core together to reconstruct larger sections of core. Reconstruct rubble zones to accurately represent the interval from which they were recovered.

Measure the core with a steel tape to the nearest 0.1 ft. Enter the amount of core drilled and recovered on the Run Marker, the Core Sample Log, and on the Daily Drilling Summary. Determine true core loss as described in the following section and do not document core loss until the next run is recovered.

Determination of Core Loss

If a core loss is indicated after measuring the core, the sample management site workers and the driller will attempt to determine the interval(s) at which the loss(es) occurred.

If the bottom portion of a run is not recovered until the following run is cut, this apparent core loss may result in inaccurate core measurement. The core may be recovered in the following run and may be identified by bit marks, core match, or other clues. The core stub may also be ground up and subsequently recovered as rubble in the next run.

If more core is recovered from the barrel than was cut by that run, reconcile the extra core with the last (up hole) core loss or with the next down hole run. Sometimes more core will be recovered from a run than was cut because of the way the core breaks below the core catcher.

If the ends of two successive core runs fit together, determine the position(s) of the loss(es) using the following procedure:

1. Assign the core loss to obvious loss zones.

2. If there are no obvious loss zones, assign the core loss to the lower most rubble zone in that run.

3. If there are no rubble zones, place the loss at the bottom of the run.

4. Enter the borehole ID, the core loss interval, and the total amount of true core loss on the label of a polystyrene foam "Lost Core Marker" (Attachment C) and place in the proper location.

6.4 Marking Core (Depth Notation, and Orientation Stripes)

Measure the core to the nearest 0.1 foot (+/- 0.2 ft) with an engineering measuring tape. The top of the run shall be the starting point for measurement. If the top of the run is angled (e.g., a fracture) and does not match with the previous run, the starting point shall be the mid-point of the fracture.

Circumscribe (as much as possible) the core with footage marks at one-foot intervals. Write depths beside footage marks. When a footage mark falls within a rubble zone, write the depth on an index card.

Ensure that the depths written on the core correspond to the depths noted on the Run Marker.

Use red and blue permanent markers to place parallel orientation stripes on core, red on right, from top to bottom (see Attachment G).

Some chemical analyses may be planned to be performed after core has been stored at the SMF. If there is a concern that those analyses could be adversely affected by organic markers, an alternative method of marking may be used. If the core is competent, the orientation marks will be created by etching two parallel lines into the core surface with an awl and a flat-bladed screwdriver. The awl line will be etched on the left side of the core, the screwdriver line on the right, for the entire length of the core. The awl will replace the blue orientation stripe; the screwdriver will replace the red orientation stripe. If this alternative marking is used, the footage marks at one-foot intervals will be etched around the core with an awl, and actual depths will not be scribed on the core at footage marks for this alternate method of marking. All competent core will be scribed with enough pressure so that the lines are easily visible, but not excessive force that would obliterate or severely alter the surface of the core.

6.5 Videograhic Documentation

The site-specific Curation Plan designates whether video photography in addition to still photography is necessary for complete records of the subject core.

If Videography is specified:

- videotape the core immediately after core orientation and marking is completed.
- use a high-resolution (8mm) video camera on a motorized track.
- complete the Field Video Log (Attachment D).

6.6 Core Logging

Log the core by run, using the Core Sample Log (Attachment E).

Record Borehole Identification Number, Sample Type (core, drive sample, etc.), Depth Interval, Name of Logger ("By"), Date(s) Logged, Checked By, Date Checked By, Technical Area and Operable Unit identification, Box Numbers included on log, Percent Recovery, and Drilling Equipment.

Draw and describe significant structural features and general lithology and petrology (and soil descriptions if applicable) on the form using standard geological symbols and terms, following the example in Attachment F.
The Core Sample Log also contains columns for entering the Lithologic Unit, Top/Bottom of Core in Box, Top/Bottom of Interval, Feet of Core in Interval (Field Measurement), Field Removed Sample Number, and Depth in Feet.

6.7 Core Box Loading and Storing

Load the core into core boxes upon completion of logging.

Store waxed cardboard core boxes fitted with polystyrene foam cradles in sufficient numbers to accommodate projected daily core recovery cycles at the drill site.

Box the core with the top of the run in the upper left corner and with core orientation maintained (Attachment G).

Transfer all polystyrene foam markers (Run, Lost Core and Analytical Sample Removed) from their position in the core rack to their corresponding position in the core box during the loading process.

Place an "End of Run Block" indicating Run Number, Amount Lost, and Ending Footage at the end of the run after it is loaded in the core box (Attachment G).

After each run is loaded, enter information on the contents of the boxes containing that run on two adhesive labels. The label is shown in Attachment G. Affix these labels in the left-hand corner of the down hole end on both the lid and body of the box.

Photograph boxed core prior to shipment off site. Complete the Field Photographic Log (Attachment H).

The OU-specific Curation Plan may require preservation of particular rock properties such as moisture and/or gasses. Place appropriate section of core in the low-permeability packaging and heat-seal. Then place the sealed core in the box in the same order that it was originally removed.

6.8 Cuttings Handling Procedure

Collect cuttings if specified in the Curation Plan. Collect specified amounts and handle according to Curation Plan. Collect cuttings that represent the targeted interval.

The HS-1 and HS-5 technicians will field screen the cuttings for radiation and organic vapors. A comparison will be made with the action levels for radiation and organic vapors established in the site-specific Health and Safety Plan. If readings indicate activity or concentrations above action levels, then cuttings handling activities will temporarily be suspended. A decision will be made by the SSO and FTL as to restarting work with upgraded personal protective equipment, modification of the level of logging required in this procedure, or other means to ensure the health and safety of workers.

<u>Logging Cuttings by Sample Management Site Workers</u>

1 Lay out cuttings in rows convenient for logging.

2. Make subdivisions within these rows at the discretion of the on-site geologist.

3. Put a marker in the place of the sample to preserve the continuity within the rows.

4. Log cuttings by scanning the rows and determining lithologic breaks based on color or other textural changes. Write lithologic descriptions on the Field Bit Cuttings Log (Attachment I).

<u>Bagging</u>

1. Place a sufficient quantity of representative cuttings, as specified in the Curation Plan, in cloth sample bags (alternative means such as glass or plastic jars may be used if dictated by the Curation Plan).

2. Label the bag. A bag label will be marked with the following information: Date, Bag Number, Borehole Identification, Depth Interval, and Collector.

3. Place a duplicate label printed on non-tearing, waterproof paper inside the bag and tightly seal.

Boxing and Labeling

1. After cuttings have been bagged and labeled, box the bags in a manner similar to core boxing (see Section 6.7).

2. Record the interval of the cuttings contained in the box on two adhesive labels. Affix these labels in the left hand corner of the down hole end on both the lid and the body of the box.

3. Seal with nylon filament strapping tape in preparation for temporary storage at the Sample Management Trailer.

7.0 REFERENCES

LANL-ER-QPP, Quality Program Plan for Environmental Restoration Activities
LANL-ER-SOP-1.01, General Instructions for Field Investigations
LANL-ER-SOP-1.02, Sample Containers and Preservation
LANL-ER-SOP-1.03, Handling, Packaging, and Shipping of Samples
LANL-ER-SOP-1.04, Sample Control and Field Documentation
LANL-ER-SOP-1.05, Field Quality Control Samples
LANL-ER-SOP-1.06, Management of RFI-Generated Waste
LANL-ER-SOPs in Section 2.0, Health and Safety in the Field
LANL-ER-SOP-4.01, Drilling Methods and Drill Site Management

"Branch Technical Procedure: Sample Management for the Yucca Mountain Project Office," 1989, Yucca Mountain Project Office, Las Vegas, NV

Goff, S.J., 1986, "Curatorial Policy Guidelines and Procedures for the Continental Scientific Drilling Program," Los Alamos National Laboratory Report LA-10542-0BES, 23 p.

Goff, S.J., 1988, "Field Procedures Manual: Shady Rest, California, and Sulphur Springs, New Mexico," Los Alamos National Laboratory Report LA-11 453-0BES, 13 p.

8.0 RECORDS

Training Documentation
Field Photographic Log
Field Video Log
Daily Drilling Summary
Field Analytical Sample Removal Checklist
Core Sample Log
Field Bit Cuttings Log
Chain-of-Custody/Request for Analysis form

The OUPL is ultimately responsible for transfer of these records to the ER Records Processing Facility in accordance with the procedure for LANL ER Records Management (LANL-ER-AP-02.1)

9.0 ATTACHMENTS

Attachment A - Equipment and Supplies Checklist for Field Logging, Handling, and Documentation of Borehole Materials
Attachment B - Field Analytical Sample Removal Checklist
Attachment C - Run Markers
Attachment D - Field Video Log
Attachment E - Core Sample Log
Attachment F - Example of Core Log Completed
Attachment G - Marking and Boxing Core
Attachment H - Field Photographic Log
Attachment I - Field Bit Cuttings Log

Los Alamos National Laboratory Environmental Restoration
EQUIPMENT AND SUPPLIES CHECKLIST FOR FIELD LOGGING, HANDLING, AND DOCUMENTATION OF BOREHOLE MATERIALS

____ engineering measuring tape
____ colored temporary markers
____ desk
____ core racks
____ work table/surface
____ indelible marker pens
____ hand lens
____ grain-size chart
____ polystyrene core cradles
____ knifes/blades
____ chisel
____ magnet
____ rags and sponges
____ PVC core trays
____ non-tearing, waterproof labels
____ cuttings containers
____ Field Analytical Sample Removal Checklist
____ polystyrene run blocks
____ miscellaneous office supplies
____ safety equipment
____ container labeling and packaging equipment
____ wire mesh sieve
____ waxed cardboard boxes and divider (specifications depend on core diameter)

____ impermeable packaging
____ pocket transit (0-360 degree)
____ rock hammer
____ dilute HCl
____ heat sealer
____ 4" x 6" index cards
____ photographic equipment
____ videographic equipment
____ computer
____ spray bottle
____ filament tape
____ rock breaker or rock saw
____ protractor
____ binocular microscope
____ electric power
____ standard rock-color chart
____ Field Video Log
____ Field Photographic Log
____ Field Bit Cutting Log
____ Core Sample Log
____ Daily Drilling Summary
____ geologic dictionary and other references and volumes
____ Chain-of-Custody/Request for Analysis Forms

LOS ALAMOS NATIONAL LABORATORY ENVIRONMENTAL RESTORATION PROGRAM

SAMPLE MANAGEMENT FACILITY

FIELD ANALYTICAL SAMPLE REMOVAL CHECKLIST

Recipient _____ Address _____
Organization _____
Telephone ( ) _____ (FTS)
Courier _____

By _____ Date _____ Page ____ of ____

Borehole ID _____ OU _____

ANALYTICAL SAMPLE INFORMATION			CHECKLIST		
Sample Number	Affixed?	Interval Removed / Date Created	Foam Marker?	Mkd/ Tag?	Pkgd? Desc.

EXAMPLE ONLY

OBTAIN ORIGINALS FROM THE CONTROL DOCUMENT CUSTODIAN

ANALYTICAL SAMPLE TRANSFER

Person Releasing Custody: _____
Date/Time _____

Person Accepting Custody: _____
Date/Time _____

Checked By _____ Date _____

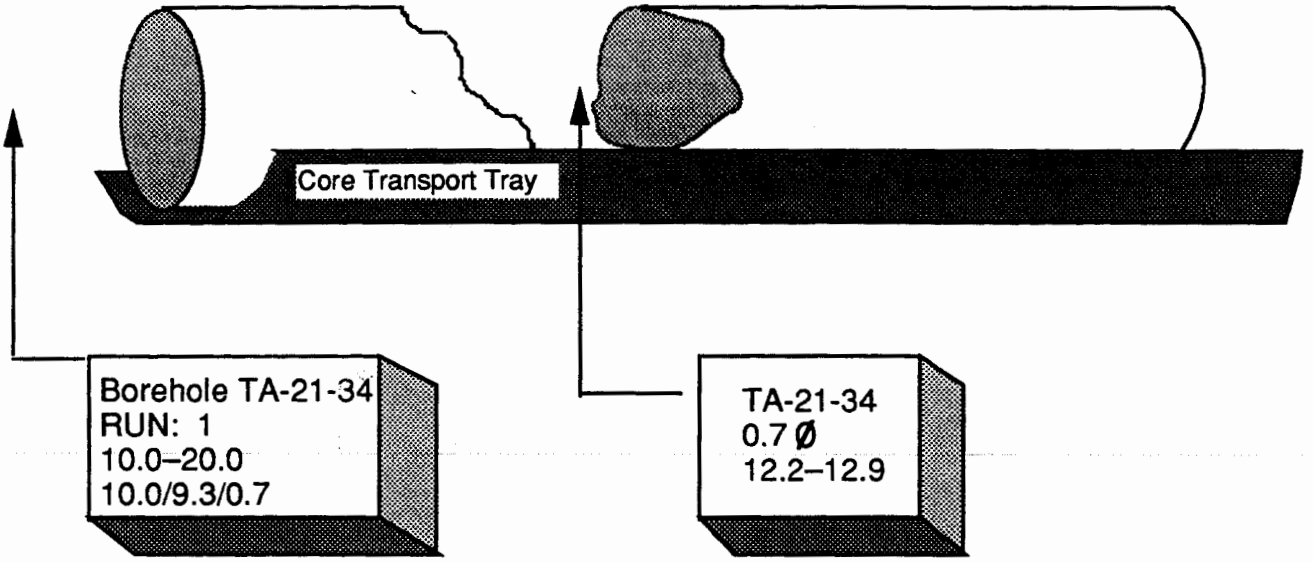

Run Marker

Lost Core Marker

Example of Marker Placement

Borehole ID Number Run Number Footage Interval Drilled/Recovered/Lost

Run Marker

Borehole ID Number Amount Lost Core Loss Interval

Core Loss Marker

LOS ALAMOS NATIONAL LABORATORY ENVIRONMENTAL RESTORATION PROGRAM

SAMPLE MANAGEMENT FACILITY

FIELD VIDEO LOG

TA/OU _____ Borehole ID # _____ Cassette # _____ Page ____ of ____

Checked By _____ Date _____

Run #	Run Interval	Counter Interval	Remarks	Photographer	
				Initials	Date

EXAMPLE ONLY

OBTAIN ORIGINALS FROM THE CONTROL DOCUMENT CUSTODIAN

LOS ALAMOS NATIONAL LABORATORY ENVIRONMENTAL RESTORATION PROGRAM

SAMPLE MANAGEMENT FACILITY

CORE SAMPLE LOG

Borehole ID #_____ Sample Type _____ From _____ To _____ Page ____ of ____

By_____ Date(s) _____ Checked By_____ Date _____

TA/OU_____ Box #(s) _____ % Recovery_____ Drilling Equip. _____

Graphic Representation	Lithologic Unit	Top/Bottom of Core in Box	Top/Bottom of Interval	Feet or Core in Interval (Field Measurement)	Field Analytical Sample Number	Depth in Feet	Lithology-Petrology - Soil

EXAMPLE ONLY

OBTAIN ORIGINALS FROM THE CONTROL DOCUMENT CUSTODIAN

LOS ALAMOS NATIONAL LABORATORY ENVIRONMENTAL RESTORATION PROGRAM

SAMPLE MANAGEMENT FACILITY

CORE SAMPLE LOG

Borehole ID 46-123 Sample Type Cont. Core From 53.7 To 59.7 Page 18 of 20

By J.R. Logger Date(s) 05 Feb 1996 Checked By DR Date 07 Feb 1996

TA/OU 46-1140 Box #(s) 12, 13 % Recovery 97 Drilling Equip. CME 75

Graphic Representation	Lithologic Unit	Top/Bottom at Core in Box	Top/Bottom of Interval	Feet of Core in Interval (Field Measurement)	Field Analytical Sample Number	Depth in Feet	Lithology-Petrology - Soil
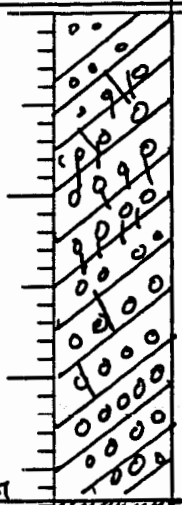	Otowi Mbr. of Bandelier Tuff	53.7	53.7 54.0	.		53.7 54.0 55.0 56.0	Clast-rich breccia, consisting of up to 20 cm diameter clasts of andesite + dacite. The breccia itself has been broken by hydraulic fracturing, forming in part a "Jig Saw Puzzle" breccia. Matrix is dark yellowish brown (10YR 4/2) to moderate yellowish brown (10YR 5/2). Moderate fine fractures
CONTACT							
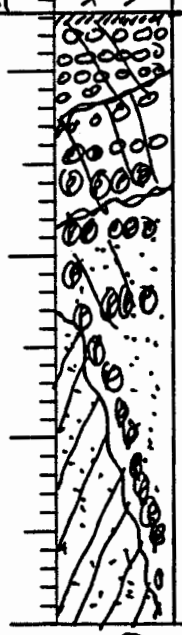	Guaje Mbr. of Bandelier Tuff	Box 12 of 20 53.7 to 58.7 58.7 Box 13 of 20 58.7 to 63.3	RUN 11 59.0	5.0'		57.0 58.0 59.0	Pyroclastic flow, many fractures and large >25 cm dia. andesite clasts -- Matrix is mostly dark-yellowish-orange (10YR 6/8) - larger cobbles - coated with Hematite.

(P) = Pumice Clast

= Fracture

○ = Pyroclasts - Andesite

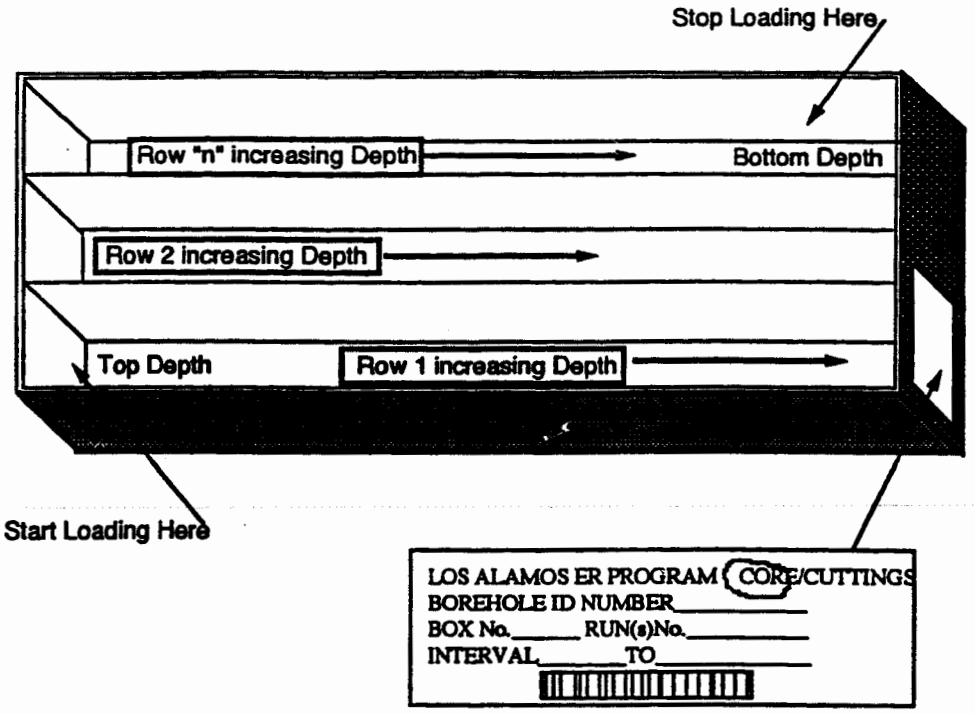
Stop Loading Here
Row "n" increasing Depth
Bottom Depth
Row 2 increasing Depth
Top Depth
Row 1 increasing Depth
Start Loading Here
LOS ALAMOS ER PROGRAM CORE/CUTTINGS
BOREHOLE ID NUMBER
BOX No. RUN(s)No.
INTERVAL TO

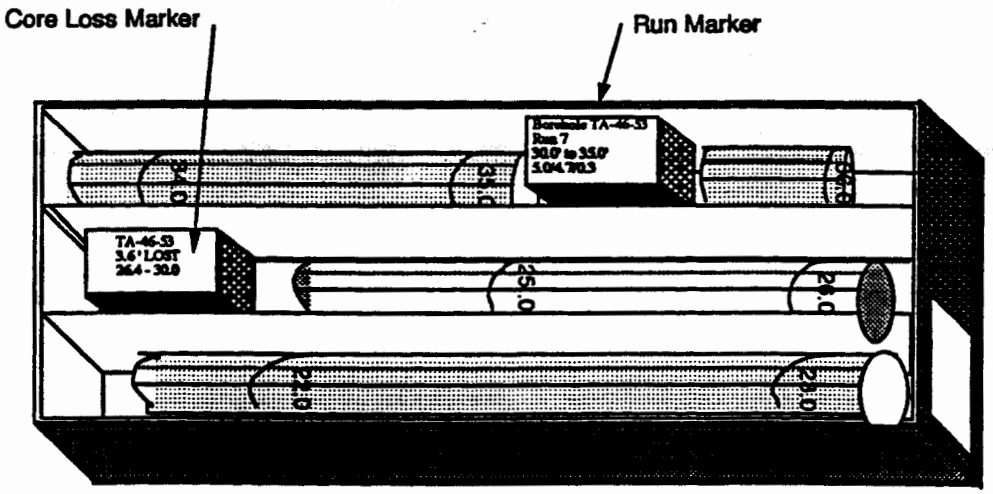
Core Loss Marker
Run Marker
TA-46-53
3.6' LOST
26.4 - 30.0

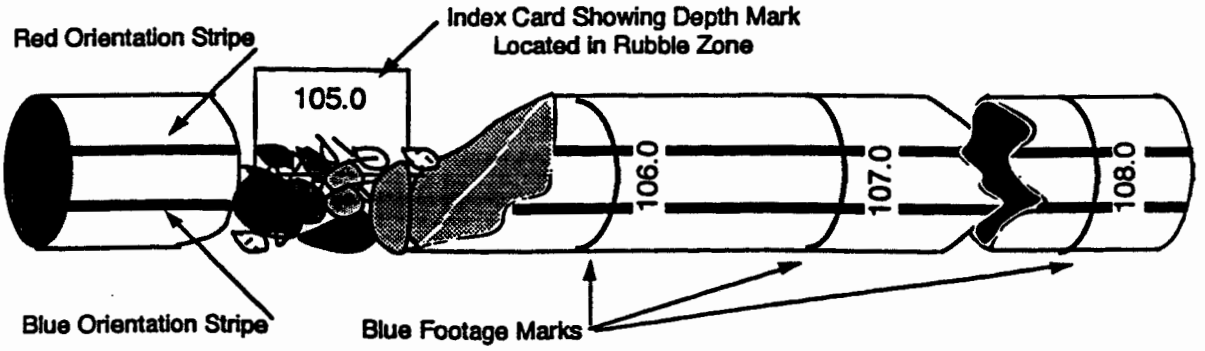
Red Orientation Stripe
Index Card Showing Depth Mark
Located in Rubble Zone
105.0
106.0
107.0
108.0
Blue Orientation Stripe
Blue Footage Marks

LOS ALAMOS NATIONAL LABORATORY ENVIRONMENTAL RESTORATION PROGRAM

SAMPLE MANAGEMENT FACILITY

FIELD PHOTOGRAPHIC LOG

TA/OU _____ Borehole ID #_____ Checked By _____ Date _____ Page ____ of ____

Photographed By _____ Date _____

Roll		Exposure			Run		Box		Other
No.	ASA	No.	f-stop	Speed	No.	Interval	Bar Code #	Interval	

EXAMPLE ONLY

OBTAIN ORIGINALS FROM THE CONTROL DOCUMENT CUSTODIAN

LOS ALAMOS NATIONAL LABORATORY ENVIRONMENTAL RESTORATION PROGRAM

SAMPLE MANAGEMENT FACILITY

BIT CUTTINGS LOG

Borehole ID #_____ Sample Type _____ From _____ To _____ Page ____ of ____

By_____ Date(s)_____ Checked By_____ Date _____

TA/OU_____ Box #(s) _____ Drilling Equip. _____

Depth or depth interval	Amount recovered (No. of bags collected)	Sample Splits Amount, requester, organization	Lithology	Comment

EXAMPLE ONLY

OBTAIN ORIGINALS FROM THE CONTROL DOCUMENT CUSTODIAN

Los Alamos National Laboratory **Environmental Restoration Program** Standard Operating Procedure	No: LANL-ER-SOP-12.01 Rev: 1

FIELD LOGGING, HANDLING, AND DOCUMENTATION OF BOREHOLE SAMPLES

	(Print Name)	(Signature)	(Date)
Prepared by	E. DOW DAVIDSON, JR.		04/28/94
Quality Review by	Tom Farmer	for Tom Farmer	5/20/94
Technical Review by	GREG BAYHURST	Greg Bayhurst	5-24-94
PM Approval	DAVID McINROY		5/20/94
QPPL Approval	L. SOUZA		5/20/94

Effective Date: 5/25/94

FIELD LOGGING, HANDLING, AND DOCUMENTATION OF BOREHOLE SAMPLES

Contents

1.0 PURPOSE 2

2.0 SCOPE 2
- 2.1 Applicability 2
- 2.2 Training 2

3.0 DEFINITIONS 2

4.0 BACKGROUND AND CAUTIONS 4

5.0 EQUIPMENT 4

6.0 PROCEDURE 5
- 6.1 Sample Staging 5
- 6.2 Core Measurement and Determination of Core Loss 7
- 6.3 Marking Core (Depth Notation and Stripes) 8
- 6.4 Initial Core Photography 9
- 6.5 Core Logging 11
- 6.6 Removal of Analytical Samples 13
- 6.7 Core Box Loading and Storing 13
- 6.8 Cuttings Handling Procedure 15

7.0 REFERENCES 16

8.0 RECORDS 17

9.0 ATTACHMENTS 17

FIELD LOGGING, HANDLING, AND DOCUMENTATION OF BOREHOLE SAMPLES

1.0 PURPOSE

This procedure provides instructions for field logging, documentation, and handling of borehole materials. The implementation of this procedure ensures that borehole samples will be correctly identified and the data derived from samples will be traceable back to the origination in the field.

2.0 SCOPE

This procedure includes activities required to collect, describe, document, and temporarily store Environmental Restoration (ER) borehole materials (core, cuttings) at operable unit (OU) drill sites.

2.1 Applicability

This procedure applies to sample management site workers performing collection, field logging, documentation, and packaging of borehole materials as specified in site-specific Resource Conservation and Recovery Act (RCRA) Field Investigation (RFI) work plans.

2.2 Training

Sample management site workers will be trained to this procedure before conducting work, and will document that they have read and understood this procedure and procedures outlined in the Los Alamos National Laboratory (Laboratory) ER Program Standard Operating Procedure (SOP) Section 1.0, General Instructions. Sample management site workers performing structural and lithologic logging of core must hold a minimum of a Bachelor's degree in Geology or the Earth Sciences or equivalent. Their qualifications must be approved by the Geology Technical Team Leader (TTL).

3.0 DEFINITIONS

A. Core: A core is a cylindrical section of rock, or fragment thereof, that is taken as a sample of the interval penetrated by a core bit and that is brought to the surface for examination and/or analysis.

B. Core Run: A core run is an attempt to drill and recover a length of core; also the piece of core recovered from a core barrel during the core run.

C. Curation Plan: A document summarizing a specific Operable Unit's plan for sample handling, specimen collection, and core curation. Included planned depth of boreholes, number of specimens to be removed, and a schedule for these activitie

The Curation Plan also allows the Field Team a place to document options in sample curation available in this SOP.

D. Cuttings: Cuttings are chips of rock produced during drilling that are removed from the borehole by circulation of drilling fluids (gas, foam, or liquid).

E. Daily Drilling Summary: The Daily Drilling Summary is a primary record of daily drill-site activity. The Field Team Leader (FTL) is responsible for keeping a chronological record of activities (using a 24-hour time clock) that occur during drill-site operations. An example can be found in LANL-ER-SOP-4.01, Drilling Methods and Drill-Site Management.

F. Drilling Package: A Drilling Package is prepared for each OU and includes the general and detailed requirements for performing drilling and associated activities. The Drilling Package consists of a detailed Drilling Plan, drilling specifications, Curation Plan, and Geophysical Logging Plan and specifications to meet the sampling requirements defined in individual RFI Work Plans.

G. Fluids: Fluids collected as samples include gases and liquids.

H. Rubble: Rubble is defined as pieces of core with diameters smaller than half the diameter of whole core such that reconstruction between individual pieces is not possible.

I. Sample: A sample is a physical entity, collected in the field, representative of the whole, that is the original source material for all subsequent analyses and testing activities.

J. Sample Coordination Facility: The facility operated by **CST-9** that functions as the clearing house for analytical chemical specimens collected for the ER Program. The Sample Coordination Facility should not be confused with the **EES-4** Sample Management Facility.

K. Sample Management Facility: The Sample Management Facility (SMF) is the facility (Building TA-3-271) used for the documentation, examination, physical processing, storage and control of selected samples, remnants, and records collected and distributed for the ER Program. The SMF consists of a physical facility and equipment designed to effectively process and preserve these samples, remnants and records.

L. Sample Management: The collection, documentation, storage and control of selected borehole materials and records. The Subsurface Technologies Team is responsible for guiding sample management activities at the drill site.

M. Specimen: A specimen is a subsection or portion which has been removed from a sample that undergoes testing, analysis, or other technical or scientific evaluation. It is also referred to as an analytical sample.

4.0 BACKGROUND AND CAUTIONS

This procedure is limited to the activities necessary to take custody of core and cuttings from drill rig personnel, conduct field screening, remove time sensitive analytical samples, complete photo documentation, perform field structural and lithologic description, and mark, package, and temporarily store the borehole materials at a drill site Sample Storage Trailer. This procedure does not address the collection of soil, rock, or fluid samples exclusively for field screening or laboratory analysis for hazardous or radiological waste. The collection of borehole fluids will be controlled by LANL-ER-SOP-1.02. Analytical sample containers and preservation and will be coordinated with the CST-9 Sample Coordination Facility (SCF).

This procedure prescribes the specific sample management methods to be followed and documentation to be prepared during handling and field logging of borehole materials identified in the site Curation Plan. A copy of this procedure with supporting references and forms will be available at the drill site at all times. The OU-specific Drilling Package and Sampling and Analysis Plan will also be available at the drill-site.

The requirements of this procedure are subject to modification depending on the exact nature of the borehole being drilled, as delineated in a Drilling Package. Borehole materials temporarily stored at the Sample Storage Trailer will be maintained in environmental conditions as defined in the relevant Curation Plan for each OU. Sample Management site workers will be familiar with the site specific Health and Safety Plan and will participate in all site pre-entry and safety meetings.

The site-specific Health and Safety Plan will function as the document defining the types and extent of monitoring activities to be performed before, during, and after borehole material collection and processing activities.

Before drilling operations, a Sample Management Core Logging Trailer and a Sample Storage Trailer will be set up at the drill site (see LANL-ER-SOP 1.01, General Instructions for Field Investigations). Copies of the Drilling Package, reference materials, applicable procedures, and an adequate quantity of documentation forms will be available in the Core Logging trailer.

5.0 EQUIPMENT

Sample management field equipment will be assembled before initiation of field activities. The Sample Management Core Logging Trailer will contain the following equipment: core racks, core transport trays, work table, photography apparatus, and container labeling and packaging equipment. The unit will be well-lighted and will be heated and ventilated. The unit will be secure, and operated as a limited access facility.

The equipment and supplies to be used are listed in Attachment A.

6.0 PROCEDURE

This procedure controls the Sample Management site worker's handling of the core from the time the core is withdrawn from the outer drill tube until the core is ready to be transported to the ER Program's SMF. For the purposes of this SOP, core may also refer to other solid samples such as drive samples, or augered samples. These activities will be performed under the direction of the Field Team Leader FTL and the Technical Team Leader for Subsurface Technologies (STTL). The number of sample management site workers involved in handling the core inner tubes will be kept to a minimum to simplify chain-of-custody interactions and to reduce total number of personnel that are necessary in exclusion zones.

Core handling procedures will be performed in sequential order. Any deviation from this procedure or from the Curation Plan requires prior consultation and agreement with the Operational Unit Project Leader (OUPL), the FTL, and the STTL. Deviations and the rationale for changes in methods will be recorded on the Daily Drilling Summary.

Personal protective gear will be worn at specified levels outlined in the site-specific Health and Safety Plan. All personnel handling the cores and other samples shall wear the required protection. Personnel handling the samples will use new clean gloves each time a new core tube is handled.

6.1 Sample Staging

The driller or helper will collect the core (or other sample form) according to drilling methods outlined in the Drilling Package, withdraw the sample from the borehole, and place the inner tube or sampler on new plastic sheeting, located on a work bench in the Exclusion Zone.

A. Field Screening

1. Once the sample has been placed on the work bench technicians from the Health Physics Group (ESH-1) and the Industrial Hygiene and Safety Group (ESH-5) will screen the samples for radioactive/hazardous constituents. This screening will be performed for two purposes: 1) to collect field screening data that will determine the immediate hazards due to handling of the samples at the site, and 2) to determine the levels of certain radiological and non-radiological characteristics for comparison with SMF health and safety based acceptance criteria for samples.

2. A comparison will be made with the action levels for radiation and organic vapors established in the site Health and Safety Plan. If readings indicate activity or concentrations above action levels then sample handling activities will temporarily be suspended. A decision will be made by the Site Safety Officer (SSO) and FTL as to restarting work with upgraded personal protective equipment, modification of the level of

logging required in this procedure, or other means to ensure the health and safety of workers.

3. Field screening values for penetrating radiation, radiologically contaminated particles, and volatile organic compound contamination will be recorded on the SMF Field Screening Log (Attachment J) or equivalent. The prescribed field screening techniques and levels are shown in Table 1.

TABLE 1

HEALTH AND SAFETY BASED ACCEPTANCE CRITERIA FOR SAMPLES SUBMITTED TO THE SAMPLE MANAGEMENT FACILITY

HAZARD	SCREENING METHOD	ACCEPTANCE CRITERIA
Penetrating Radiation	Gross Beta/Gamma Detector	<100,000 dpm/100 cm^2 @ 1 in from sample
Beta/Gamma Contaminated Particulates	Beta/Gamma Detector	<100,000 dpm/100 cm^2
Alpha Contaminated Particulates	Gross Alpha Detector	<1,000 dpm/100 cm^2
Volatile Organic Compounds	PID, FID	<5.9 ppm total VOC

4. Samples will be field screened on a run by run basis, the data recorded and certified by the ESH-1 and ESH-5 technician(s) on the SMF Field Screening Log (Attachment J) or equivalent. Additionally the technicians will record the screening data on an index card that will correspond to the core run. This card will stay with the core run as it is moved to the Core Logging Trailer or the Sample Storage Trailer. The Log (and index card) will indicate whether the samples are above or below the acceptance criteria. If above, the samples will be held at the Sample Storage Trailer on site until a determination is made as to their disposition. If below, the samples are now available for movement to the Core Logging Trailer and subsequent transport and acceptance at the SMF (SM-271). There may be additional screening required prior to unconditional release to the SMF. For example additional screening could consist of liquid scintillation counting for sites suspected of being contaminated with tritium or alpha/gamma spectroscopy for unidentified radionuclides.

B. Samples to Core Logging Trailer

Upon the determination that samples are safe to handle in the Core Logging Trailer:

1. Sample management site workers will obtain run information (Run Number, Depth Interval) from the driller or a helper. The driller will provide the information on a run card (4" x 6" index card or equivalent). The sample management site workers will also gather the field screening data index card from the ESH-1 and ESH-5 technician(s). Sample management site workers will place the run card at the top end of the core in the inner liner or core transport tray. Sample management site workers will ensure that the core is not switched end-for-end during transport to the Sample Management Core Logging Trailer.

2. The core will then be transferred to the Sample Management Core Logging Trailer. Sample management site workers or alternatively, drill rig personnel will carry the core transport tray to the Core Logging Trailer and place in a core rack lined with clean polyethylene sheeting.

3. A polystyrene foam run marker (Attachment C) replaces the driller's run card at the top of the run.

6.2 Core Measurement and Determination of Core Loss

A. Temporary Packaging of Time Sensitive Analytical Samples

1. Many time-sensitive analyses require that analytical samples be collected, containerized, and preserved soon after the borehole materials are brought to the surface. The requirement for the removal of analytical samples directly from the drill site will be delineated in the site-specific Curation Plan.

2. Individual sections of core containing analytical samples that would suffer damage if left exposed while awaiting measuring, marking, photography, and logging will be temporarily packaged.

B. Measurement of Run Interval

1. Starting at the top of the core run, pieces of core will be fitted together to reconstruct larger sections of core. Rubble zones will be reconstructed to accurately represent the interval from which they were recovered.

2. The core will be measured with a steel engineering tape to the nearest 0.1 ft. Enter the amount of core drilled and recovered on the Run Marker, the Core Sample Log, and on the Daily Drilling Summary. True core loss will be determined as described in the following section and do not document core loss until the next run is recovered.

C. Determination of Core Loss

1. If a core loss is indicated after measuring the core, the sample management site workers and the driller will attempt to determine the interval(s) at which the loss(es) occurred.

2. If the bottom portion of a run is not recovered until the following run is cut, this apparent core loss may result in inaccurate core measurement. The core may be recovered in the following run and may be identified by bit marks, core match, or other clues. The core stub may also be ground up and subsequently recovered as rubble in the next run.

3. If more core is recovered from the barrel than was cut by that run, reconcile the extra core with the last (up hole) core loss or with the next down hole run. Sometimes more core will be recovered from a run than was cut because of the way the core breaks below the core catcher.

4. If the ends of two successive core runs fit together, determine the position(s) of the loss(es) using the following procedure:

   a. Assign the core loss to obvious loss zones.

   b. If there are no obvious loss zones, assign the core loss to the lower most rubble zone in that run.

   c. If there are no rubble zones, place the loss at the bottom of the run.

   d. Enter the borehole ID, the core loss interval, and the total amount of true core loss on the label of a polystyrene foam "Lost Core Marker" (Attachment C) and place in the proper location.

6.3 Marking Core (Depth Notation and Stripes)

A. Measure the core to the nearest 0.1 foot (+/- 0.2 ft) with an engineering measuring tape. The top of the run shall be the starting point for measurement. If the top of the run is angled (e.g., a fracture) and does not match with the previous run, the starting point shall be the mid-point of the fracture.

B. Circumscribe (as much as possible) the core with footage marks at one-foot intervals. Write depths beside footage marks. When a footage mark falls within a rubble zone, write the depth on an index card.

   1. Ensure that the depths written on the core correspond to the depths noted on the Run Marker.

   2. Use red and blue permanent markers to place parallel orientation stripes on core, red on right, from top to bottom (see Attachment G).

C. An alternative method for marking depths and orientation stripes may be used If the core sample is too soft or friable for marking directly on the surface. After core has undergone initial photography and logging has been completed it may be placed in polyethylene lay-flat tubing and the ends heat sealed (this process must take place subsequent to all field analytical samples being removed). The red and blue parallel orientation stripes and the one-foot depth markings may then be drawn directly on the surface of the polyethylene lay-flat tubing.

D. Some chemical analyses may be planned to be performed after core has been stored at the SMF. If there is a concern that those analyses could be adversely affected by organic markers an alternative method of marking may be used. If the core is competent, the orientation marks will be created by the etching of two parallel lines into the core surface using an awl and a flat-bladed screwdriver. The awl line will be etched on the left side of the core, the screwdriver line on the right, for the entire length of the core. The awl will replace the blue orientation stripe, the screwdriver will replace the red orientation stripe. If this alternative marking is used the footage marks at one-foot intervals will be etched around the core with an awl, actual depths will not be scribed on the core at footage marks for this alternate method of marking. All competent core will be scribed with enough pressure so that the lines are easily visible, but not excessive force that would obliterate or severely alter the surface of the core.

6.4 Initial Core Photography

Field photography of the core prior to excessive handling is a reliable method to document the approximate in situ condition of the core and provides a visual record in the event of core destruction. Field photo documentation occurs twice: while core is in the inner tube and after the core has been logged and boxed. Depending upon the requirements of the site-specific Curation Plan core may be photographed with either a still or video camera or both.

A. Still Photography

1. Initial still photographs will be taken of the core while in the inner liner or core tray, immediately after core orientation and marking is completed.

2. A 35 mm format single lens reflex camera will be used for still field photography. Equipment and accessories will include but not be limited to: lenses, lens filters, film matched with the type of lighting, camera rack, flood lights or flash unit, color card, scale in 0.1 ft intervals.

3. All core markings will be complete, accurate, legible, and visible to the photographer. A color card and an information card labeled with the borehole identification (ID), run number, depth interval, date and core loss interval(s) will be centered in the photograph above the core. A

scale marked in 0.1 ft intervals will be placed parallel to the section b photographed.

4. The camera will be attached to the camera rack and checked for distance, focus f-stop, and shutter speed. The field of view will be checked for shadows or obstructions. Each exposure shall include approximately 2 ft of core; the first exposure will be made at the top of the run, and continuous exposures made until the entire run of core is photographed.

5. Individual close-up exposures of specific interesting features in the core may be taken after the entire length of the run has been sequentially exposed. This will be done by placing a color card and index card with the borehole ID, depth or depth interval, and description of the feature beside the core interval of interest. Complete the Field Photographic Log (Attachment H).

6. Adhesive labels with the following information will be attached to the film canister and to the roll of film: borehole ID, run number(s), date, roll number, and total footage interval documented by the roll. The film will be locked in a cool dark location by sample management site workers and periodically transferred off-site for development.

B. Video Photography

The site specific Curation Plan designates whether video photography in addition to still photography is necessary for complete records of the subject core. If video photography is specified:

1. Initial video tape photographs will be taken of the core while still in the inner liner, immediately after core orientation and marking is completed.

2. A high-resolution (8 mm) video camera will be used for video photography of the core. Equipment and accessories should include: camera rack, flood lights, power supply, scale in 0.1 ft intervals.

3. All core markings will be complete, accurate, legible, and visible to the photographer. An information card label with the borehole ID, run number, depth interval, date and core loss interval(s) will be placed at the top of the core run. A scale marked in 0.1 ft intervals will be placed next to the core run.

4. The camera will be attached to the camera rack and checked for distanc and focus. Ensure the proper cassette is identified and placed in the video camera. The field of view will be checked for shadows or obstructions. The videotaping will proceed from the top to the bottom of the run. The photographer will provide borehole ID, run number and depth interval information on the audio track of the video by speaking

the microphone during taping. Complete the Field Video Log (Attachment D).

5. Write the following information on the videotape cassette: borehole ID, run number(s), dates, tape number, and total footage interval documented by the tape. Lock tape in a cool, dark location until transfer to the SMF.

6.5 Core Logging

A. Log the core by run, using the Core Sample Log (Attachment E).

1. Record the following information on the Core Sample Log: Borehole Identification Number, Technical Area and Operable Unit identification, Drill Depth Interval, page number and total pages, Driller, Box Numbers included on log, Start Date/Time, End Date/Time, Drilling Equipment/ Method, Sampling Equipment/Method, Prepared By (name of logger), Date, and Checked By Date.

2. Draw and describe significant structural features and general lithology and petrology (and soil descriptions if applicable) on the form using standard geological symbols and terms (see Attachment F). The Core Sample Log also contains columns for entering the Depth, Recovery (feet per feet %), Field Borehole Analytical Sample Number, Field Screening Results, Top/Bottom of Core in Box, Lithologic Unit, Graphic Log, and Notes.

3. The columns on the log will be used to record a lithologic description of the rock, as well as the accepted geologic formation and/or member names. Depths will be recorded in feet to the nearest 0.1 ft; features may be measured in tenths of a foot, centimeters, or millimeters as appropriate.

4. This log format will be used to ensure that characteristic features of lithologic units will not be overlooked. Charts, tables, and other references will be available at the site to aid the sample management site worker in logging features in a consistent manner. This logging format consists of three parts: a) Primary Descriptive Terms, b) Genera Features, and c) Specific Features.

   a. Primary Descriptive Terms: noted for every lithologic unit in the following order, offering a broad skeletal description of the interval.

   <u>Unit</u> - a distinct body of rock, representing a discrete geologic event; distinguished from other units above and below it by different physical properties (e.g., color, mineralogy, and morphology).

Type - this is an adjective describing the unit, suggestive of the depositional mode and is generally ash flow, ash fall, bedded, or reworked.

Color - hue and tone noted under appropriate lighting conditions, along with reference to a standard geologic color chart (e.g., geological Society of America Rock-Color Chart); e.g., light red (visual), SR 6/6 (color chart reference).

Welding - (for use on tuff units) degree of welding: choices are nonwelded, moderately and densely.

Alteration - degree of alteration (primarily for use on tuff units); choices are vitric, devitrified, and vapor phase altered

Core Competency - how well does the recovered core holds together. Terms such as soft/hard, poorly indurated/well indurated are acceptable.

b. General Features: characteristic of the entire unit interval; estimate percent volumes (volumetric proportions) of these features, when applicable, using a suitable percent volume chart; when present general features will be described in the following order; additional detail may be added as appropriate:

Pumice - includes percent volume of the interval, alteration features, color, size, range, and flattening ratio.

Lithic fragments - includes percent volume of the interval, rock type, color, shape (sphericity and roundness) and diameter of fragments.

Phenocrysts - includes percent volume of the interval, mineral type (if distinguishable and expressed minimally as mafics/quartz/feldspar), color, shape, and diameter.

Unit contact - describes nature of contact with underlying unit; generally ranges from sharp to gradational but may include any appropriate phrase.

Matrix - describe color and whether matrix is dense and non-porous or open and porous.

c. Specific Features: Specific Features are characteristic of a zone within a unit interval. These are isolated, localized features and are not common throughout the unit. Due to their localized nature, these features always contain depth notation, e.g., "at 702.3 ft, a 0.1 ft elongate fracture with calcite infilling" or from 325.7 - 328.2 ft, numerous very small (0.05 ft) euhedral, very dark red (5R2/6) lithic fragments. Also foam markers (run, core loss) will be logged here.

6.6 Removal of Analytical Samples

In order to establish the correct origination point for the analytical samples the core will be measured before the removal of any analytical samples. No core will be removed from the field before it has been marked and photographed unless specifically called for in the Curation Plan. Individual sections of a core that contain time sensitive analytical samples will be temporarily packaged immediately after the core run has been moved to the Sample Management Core Logging Trailer (see Section 6.2, Temporary Packaging of Time Sensitive Analytical Samples).

A. Prior to the analytical samples being removed from the drill site, sample management site workers will complete the Field Borehole Analytical Sample Removal Checklist (Attachment B). This checklist will be used for transfer of all analytical samples from sample management site workers to off-site, including to the CST-9 Sample Coordination Facility. The following steps outline the procedure for removal of analytical samples from the drill site:

1. Evaluate the list of requested intervals or features from the Curation Plan.

2. The core may need to be broken or cut to retrieve a portion for an analytical sample.

3. Temporarily package individual sections of core containing analytical samples that would suffer damage if left exposed while awaiting measuring.

4. Measure, mark, photograph, and log core.

5. Affix a sample label (Field Borehole Analytical Sample) to the packaging material containing the analytical sample. The Field Borehole Analytical Sample label contains Borehole ID, interval, requester, and unique number.

6. Remove the analytical sample from the core and place a foam marker at the location the sample portion was removed. Affix the duplicate sample sticker (Field Borehole Analytical Sample) to the foam marker.

7. Release the analytical sample(s) to the requester (in most cases CST-9) who will package and ship the analytical samples according to LANL-ER-SOP-1.02, Sample Containers and Preservation and SOP-1.03, Handling, Packaging, and Shipping of Samples. Document the process according to SOP-1.04, Sample Control and Field Documentation.

6.7 Core Box Loading and Storing

A. Boxing Samples

1. Store waxed (interior only) cardboard core boxes fitted with polystyrene foam cradles in sufficient numbers to accommodate projected daily core recovery cycles at the drill site.

2. Box the core with the top of the run in the upper left corner and with core orientation maintained (Attachment G).

3. Transfer all polystyrene foam markers (Run, Lost Core, and Analytical Sample Removed) from their position in the core rack to their corresponding position in the core box during the loading process.

B. Bagging Rubble

1. Sufficient space will be left in the core box for intervals of rubble between sections of whole core. Rubble zones will be removed with a minimum of disruption from the core tray (or inner tube) after all the whole core sections have been placed in the core box. An interval of rubble will be pushed to the end of the inner tube. A piece of split **PVC** tubing slightly larger in diameter than the inner tube will be cradled under one end of the inner tube until the ends are parallel. A piece of lay-flat tubing will be slipped over the inner tube, the split PVC tube, and the interval of rubble.

2. The section of rubble will then be pushed over the edge of the inner tube while the PVC and lay-flat tubing are pulled parallel and away from the inner tube. All rubble will be bagged to the nearest one foot; that is, no lay-flat tubing will contain more than one foot of rubble nor will it contain rubble from both sides of a footage mark.

3. After the rubble has been transferred from the inner tube (or core tray) the split PVC tube will be removed, and the ends of the lay-flat tubing will be heat sealed. The sealed sections of rubble will be labeled with borehole ID and depth intervals represented by writing the top depth at the top of the sealed tubing and the bottom at the bottom of the tubing. Orientation stripes will be placed on the tubing as described in Section 6.3.

4. After each run is loaded enter information on the contents of the boxes containing that run on two adhesive labels. The label is shown in Attachment G. Affix these labels in the left-hand corner of the down hole end on both the lid and body of the box.

C. Photography of Boxed Core

Sample management site workers will photograph boxed core prior to shipment off site. A card displaying box bar code number, borehole ID, date, name of photographer, and color bar will be placed adjacent to the core box. A scale marked in 0.1 ft intervals will be placed parallel to the box. Complete the Field Photographic Log (Attachment H).

D. Sealing of Core

All core samples will normally be placed in polyethylene lay-flat tubing and heat sealed In an effort to preserve the core and to minimize the release of possible contaminants from the samples. Any deviation from this practice must be placed in the OU-specific Curation Plan.

1. Each row of core will be placed into polyethylene lay-flat tubing as a unit. This will include the core and packaged rubble, the polystyrene foam core cradle, and the cardboard divider pad. The entire unit will be carefully lifted from the box and slipped into the lay-flat tubing and heat sealed.

2. At this point the surface of the lay-flat may be marked with orientation, and footage marks if the core was too unconsolidated or soft to do so earlier.

6.8 Cuttings Handling Procedure

Collect cuttings if specified in the Curation plan. Collect specified amounts and handle according to Curation Plan. Collect cuttings that represent the targeted interval.

A. Field Screening

1. The ESH-1 and ESH-5 technicians will field screen the cuttings for radiation and organic vapors. A comparison will be made with the action levels for radiation and organic vapors established in the site-specific Health and Safety Plan. If readings indicate activity or concentrations above action levels then cuttings handling activities will temporarily be suspended. A decision will be made by the SSO and FTL as to restarting work with upgraded personal protective equipment, modification of the level of logging required in this procedure, or other means to ensure the health and safety of workers. Field screening values for penetrating radiation, radiologically contaminated particles, and volatile organic contamination will be recorded on the SMF Field Screening Log (Attachment J) or equivalent .

2. Cuttings will be field screened on a run by run basis, the data recorded and certified by the ESH-1 and ESH-5 technician(s) on the SMF Field Screening Log or equivalent. The Log will indicate whether the samples are above or below the acceptance criteria. If above, the samples will be held at the Sample Storage Trailer on site until a determination is made as to their disposition. If below, the samples are now available for release for transport and acceptance at the SMF (SM-271). There may be additional screening required prior to unconditional release to the SMF.

B. Logging Cuttings by Sample Management Site Workers

1. Lay out cuttings in rows convenient for logging.

2. Make subdivisions within these rows at the discretion of the on-site geologist.

3. Put a marker in the place of any removed samples to preserve the continuity within the rows.

4. Log cuttings by scanning the rows and determining lithologic breaks based on color or other textural changes. Write lithologic descriptions on the Field Bit Cuttings Log (Attachment I).

C. Bagging

1. Place a sufficient quantity of representative cuttings, as specified in the Curation Plan, in plastic sample bags (alternative means such as glass, plastic jars, or polyethylene lay-flat tubing may be used if dictated by the Curation Plan).

2. Label the bag. A bag label will be marked with the following information: Date, Bag Number, Borehole Identification, Depth Interval, and Collector.

3. Place a duplicate label printed on non-tearing, waterproof paper inside the bag and tightly seal.

D. Boxing and Labeling

1. After cuttings have been bagged and labeled, box the bags in a manner similar to core boxing (see Section 6.7).

2. Record the interval of the cuttings contained in the box on two adhesive labels. Affix these labels in the left hand corner of the down hole end on both the lid and the body of the box.

3. Seal with nylon filament strapping tape in preparation for temporary storage at the Sample Storage Trailer.

7.0 REFERENCES

LANL-ER-QPP, Quality Program Plan for Environmental Restoration Activities
LANL-ER-SOP-1.01, General Instructions for Field Investigations
LANL-ER-SOP-1.02, Sample Containers and Preservation
LANL-ER-SOP-1.03, Handling, Packaging, and Shipping of Samples
LANL-ER-SOP-1.04, Sample Control and Field Documentation
LANL-ER-SOP-1.05, Field Quality Control Samples
LANL-ER-SOP-1.06, Management of RFI-Generated Waste

LANL-ER-SOPs in Section 2.0, Health and Safety in the Field
LANL-ER-SOP-4.01, General Drill Site Management

"Branch Technical Procedure: Sample Management for the Yucca Mountain Project Office," 1989, Yucca Mountain Project Office, Las Vegas, NV

Goff, S.J., 1986, "Curatorial Policy Guidelines and Procedures for the Continental Scientific Drilling Program," Los Alamos National Laboratory Report LA-10542-0BES, 23 p.

Goff, S.J., 1988, "Field Procedures Manual: Shady Rest, California, and Sulphur Springs, New Mexico," Los Alamos National Laboratory Report LA-11453-0BES, 13 p.

8.0 RECORDS

Field Photographic Log
Field Video Log
Daily Drilling Summary
Field Borehole Analytical Sample Removal Checklist
Field Screening Log
Core Sample Log
Field Bit Cuttings Log

The SMF is ultimately responsible for transfer of these records to the ER Records Processing Facility in accordance with the procedure for Laboratory ER Records Management (LANL-ER-AP-02.1)

9.0 ATTACHMENTS

Attachment A - Equipment and Supplies Checklist for Field Logging, Handling, and Documentation of Borehole Materials
Attachment B - Field Borehole Analytical Sample Removal Checklist
Attachment C - Run Markers
Attachment D - Field Video Log
Attachment E - Core Sample Log
Attachment F - Example of Core Log Completed
Attachment G - Marking and Boxing Core
Attachment H - Field Photographic Log
Attachment I - Field Bit Cuttings Log
Attachment J - Field Screening Log

Los Alamos National Laboratory Environmental Restoration Program
EQUIPMENT AND SUPPLIES CHECKLIST FOR FIELD LOGGING, HANDLING, AND DOCUMENTATION OF BOREHOLE MATERIALS

____ engineering measuring tape
____ colored temporary markers
____ desk
____ core racks
____ work table/surface
____ indelible marker pens
____ hand lens
____ grain-size chart
____ polystyrene core cradles
____ knifes/blades
____ chisel
____ magnet
____ rags and sponges
____ PVC core trays
____ non-tearing, waterproof labels
____ cuttings containers
____ Field Borehole Analytical Sample Checklist
____ polystyrene run blocks
____ miscellaneous office supplies
____ safety equipment
____ container labeling and packaging equipment
____ wire mesh sieve
____ waxed cardboard boxes and divider (specifications depend on core diameter)
____ Polyethylene Lay-Flat tubing
____ impermeable packaging
____ pocket transit (0-360 degree)
____ rock hammer
____ dilute HCl
____ heat sealer
____ 4" x 6" index cards
____ photographic equipment
____ videographic equipment
____ computer
____ spray bottle
____ filament tape
____ rock breaker/or rock saw
____ protractor
____ binocular microscope
____ electric power
____ standard rock-color chart
____ Field Video Log
____ Field Photographic Log
____ Field Bit Cutting Log
____ Core Sample Log
____ Daily Drilling Summary
____ Field Screening Log
____ geologic dictionary and other references and volumes
____ Chain-of-Custody/Request for Analysis Forms
____ Polyethylene sheeting

LOS ALAMOS NATIONAL LABORATORY ENVIRONMENTAL RESTORATION PROGRAM

SAMPLE MANAGEMENT FACILITY

FIELD BOREHOLE ANALYTICAL SAMPLE REMOVAL CHECKLIST

Recipient _____ Address _____

Organization _____ _____

Telephone ( ) _____ _____

Form Completed By _____ Date _____ Page_____of _____

Borehole ID_____ TA/OU _____/_____

FIELD BOREHOLE ANALYTICAL SAMPLE INFORMATION			CHECKLIST		
Field Borehole Analytical Sample Bar Code Number (SpecID)	Affixed?	Interval Removed / Date Removed	Foam Marker?	Marked & Tagged?	Packaged? Described?

FIELD BOREHOLE ANALYTICAL SAMPLE TRANSFER

Person Releasing Custody: _____ Person Accepting Custody: _____

Date/ Time _____ Date/ Time _____

SMF USE ONLY Checked By _____ Date _____

R1.

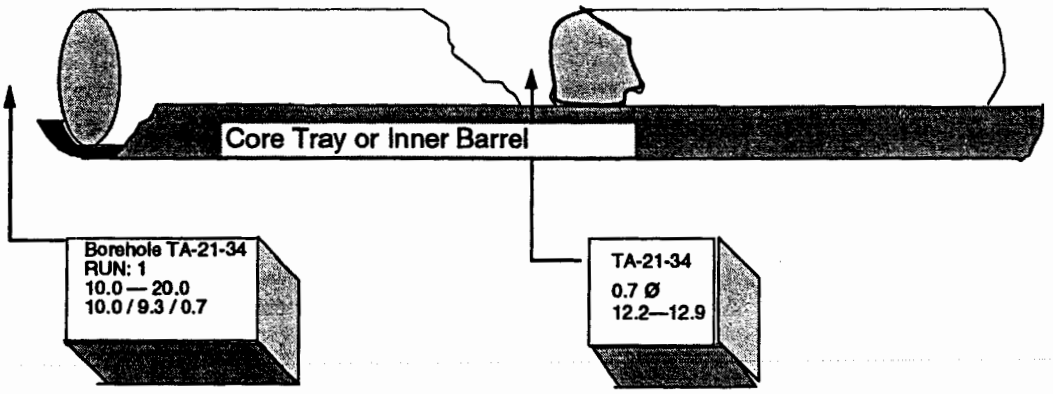

Run Marker

Lost Core Marker

Example of Marker Placement

Borehole ID Number Run Number Footage Interval Drilled/ Recovered/ Lost

Run Marker

Borehole ID Number Amount Lost Core Loss Interval

Core Loss Marker

LOS ALAMOS NATIONAL LABORATORY ENVIRONMENTAL RESTORATION PROGRAM

SAMPLE MANAGEMENT FACILITY

FIELD VIDEO LOG

TA/OU _____ Borehole ID # _____ Cassette # _____ Page _____ of _____

Checked By _____ Date _____

Run #	Run Interval	Counter Interval	Remarks	Photographer	
				Initials	Date

LOS ALAMOS NATIONAL LABORATORY ENVIRONMENTAL RESTORATION PROGRAM

SAMPLE MANAGEMENT FACILITY

CORE SAMPLE LOG

Borehole ID_____ TA/OU _____ Drill Depth From _____ To _____ Page_____of _____

Driller _____Box #(s) _____ Start Date/Time _____ End Date/Time_____

Drilling Equip./Method _____ Sampling Equip./Method_____

Depth (Feet)	Recovery (feet per feet/ %)	Field Borehole Anaytical Sample Number	Field Screening Results	Top/Bottom of Core in Box	Lithology - Petrology - Soil	Graphic Log	Lithologic Unit	Notes

Prepared By _____ Date _____ Checked By _____ Date _____

R.1

LOS ALAMOS NATIONAL LABORATORY ENVIRONMENTAL RESTORATION PROGRAM

SAMPLE MANAGEMENT FACILITY

CORE SAMPLE LOG

Borehole ID 99-1001 TA/OU 99/1199 Drill Depth From 70.0 Ft. To 100.0 Ft. Page 3 of 9

Driller ABC Drilling Co. Box #(s) 5, 6, 7 Start Date/Time 10 JAN 94/0700 End Date/Time 15 JAN94/1445

Drilling Equip./Method CME 75/ Air Rotary Sampling Equip./Method Continuous Core/Split Barrel

Depth (Feet)	Recovery (feet per feet/ %)	Field Borehole Anaylical Sample Number	Field Screening Results	Top/Bottom of Core in Box	Lithology - Petrology - Soil	Graphic Log	Lithologic Unit	Notes
70	13 3.6/5.0	AAA-0001 70.2-70.4 Rad/Moist SPC-ID 303 AAA-0002 72.5-73.5 Geotec.	250 cpm β/γ 117 cpm α	Box 5 of 18 65.5 ft. to 79.0 ft.	Massive, Poorly sorted, non-welded IGNIMBRITE. 20% pumice lapilli, yellowish gray (5Y 7/2), Vapor-phased altered w/ growth of sanadine xtals in pumice vesicles, sugary texture. 25% phenochrysts, quartz, minor k-spars. 7% lithics, mod.-reddish brown (10R 4/6) fragments, possibly Fe-oxides. Remainder light brownish gray (5YR 6/1) groundmass glass fragments (ash). Moderate vapor-phase altered, readily seen in pumice fragments. Groundmass is cohesive due to vapor phase alteration, and non welded.		Tshirege Member of Bandelier Tuff	Start Drilling 10 JAN 94 0800
75	14 3.3/5.0	AAA-0003 76.4-76.6 Rad/Moist AAA-0004 77.0-77.5 Radchem /Metal	300 cpm β/γ 50 cpm α 77.2 ft = 420 cpm β/γ		Same as Above			1012 - Air Rotary Rig Lost Air Pressure- Rig Down
80	15 4.0/5.0	AAA-0005 81.6-81.8 Rad/Moist AAA-0006 84.0-85.0 Radchem /Metal	400 cpm β/γ 150 cpm α 84.0 ft = 600 cpm β/γ	Box 6 of 18 79.0 ft. to 92.5 ft.	Same as above, except degree of welding increasing to slightly welded. 82.5 - Fracture, 0.3 ft long, clay coated, brecciated			
85	16 3.5/5.0	AAA-0007 85.3-85.5 Rad/Moist AAA-0008 86.2-86.8 Radchem /Metal SPC-ID 304 AAA-0009 88.0-88.5 Geotec.	500 cpm β/γ 175 cpm α		Same as above 86.0 - Color of groundmass changes to mod. orange pink (10R 7/4) 89.0 - Degree of welding changing to nonwelded.			1200 - Lunch 1300 - Begin Drilling
90	17 2.0/5.0	AAA-0010 90.2-90.4 Rad/Moist SPC-ID 304 AAA-0011 92.5-93.5 Geotec.	510 cpm β/γ 180 cpm α		Same as above 91.5 - Massive mod. well sorted, nonwelded IGNIMBRITE. 7-10% pumice lapilli, yellowish-gray (5Y 7/2), little vapor phase alteration, some sugary texture, structures well preserved. 2% phenochrysts, quartz 4% lithics Remainder mod. ORange-Pink (10R 7/4) ash. Groundmass is non-welded, non-cohesive.			
95	18 2.5/5.0	AAA-0012 95.0-95.2 Rad/Moist	490 cpm β/γ 160 cpm α	Box 7 of 18 92.5 ft to 103.5 ft.	Same as above			1700 - End Drilling - 10 JAN 94
100								

Prepared By J. B. Geologist Date 10 JAN 94 Checked By J. B. Supervisor Date 11 JAN 94

R.1

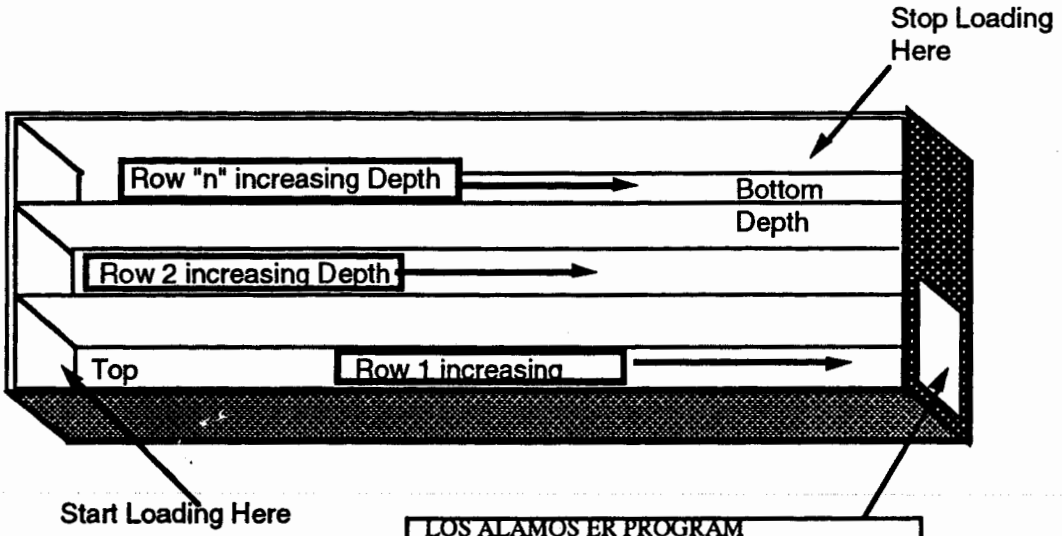

LOS ALAMOS ER PROGRAM
BOREHOLE ID NUMBER_____
BOX No._____ RUN(s)No._____
INTERVAL_____TO_____

FCT 00000000202

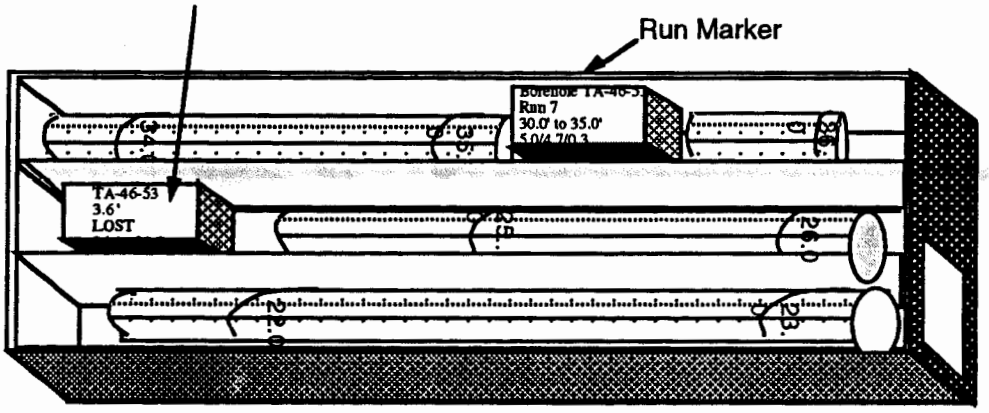

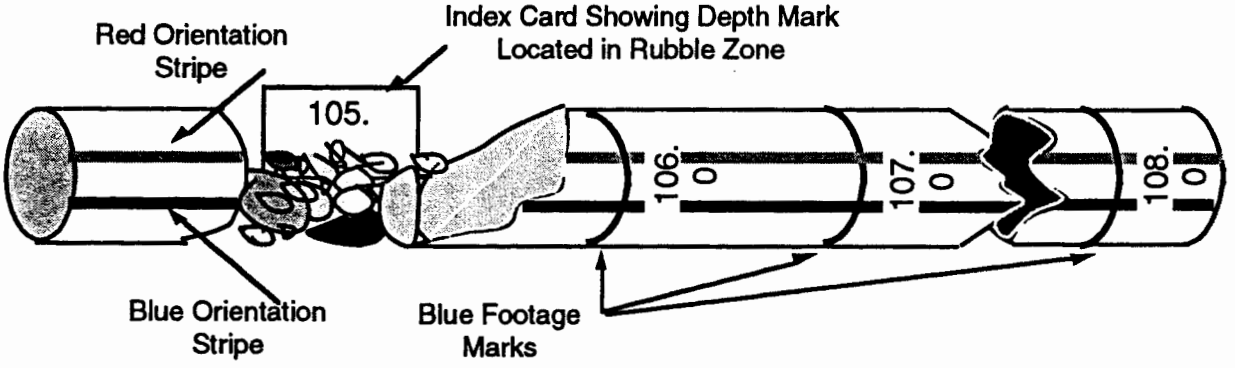

LOS ALAMOS NATIONAL LABORATORY ENVIRONMENTAL RESTORATION PROGRAM

SAMPLE MANAGEMENT FACILITY

FIELD PHOTOGRAPHIC LOG

TA/OU _____ Borehole ID_____ Checked By _____ Date _____ Page_____of _____

Photographed By _____ Date _____

Roll		Exposure			Run		Box		Other
No.	ASA	No.	f-stop	Speed	No.	Interval	Bar Code #	Interval	

LOS ALAMOS NATIONAL LABORATORY ENVIRONMENTAL RESTORATION PROGRAM

SAMPLE MANAGEMENT FACILITY

BIT CUTTINGS LOG

Borehole ID_____ Sample Type _____ From _____ To _____ Page_____of _____

By _____ Date(s) _____ Checked By _____ Date _____

TA/OU _____ Box #(s) _____ Drilling Equip._____

Depth or depth interval	Amount recovered (No. of bags collected)	Sample Splits Amount, requester, organization	Lithology	Comment

LOS ALAMOS NATIONAL LABORATORY ENVIRONMENTAL RESTORATION PROGRAM

SAMPLE MANAGEMENT FACILITY

FIELD SCREENING LOG

TA/OU _____ Borehole ID_____ Checked By _____ Date _____ Page_____of _____

Run		Hazard	Screening Method	Reading	Acceptance Criteria		Technician's Certification
No.	Interval				BELOW	ABOVE	

Los Alamos National Laboratory **Environmental Restoration Program** Standard Operating Procedure	No: LANL-ER-SOP-12.02 Rev: 1

TRANSPORTATION, RECEIPT, AND ADMITTANCE OF BOREHOLE SAMPLES FOR THE SAMPLE MANAGEMENT FACILITY

Prepared by	E. Dow Davidson Jr. (Print Name)	(Signature)	05-17-94 (Date)
Quality Review by	G. Thomas Farmer (Print Name)	G. Thomas Farmer (Signature)	5-18-94 (Date)
Technical Review by	Greg Bayhurst (Print Name)	Greg Bayhurst (Signature)	5-17-94 (Date)
PM Approval	David McInroy (Print Name)	(Signature)	20 MAY 1994 (Date)
QPPL Approval	Larry Souza (Print Name)	L. A. Souza (Signature)	5/19/94 (Date)

Effective Date: 5/25/94

TRANSPORTATION, RECEIPT, AND ADMITTANCE OF BOREHOLE SAMPLES FOR THE SAMPLE MANAGEMENT FACILITY

Contents

1.0 PURPOSE 2

2.0 SCOPE 2
- 2.1 Applicability 2
- 2.2 Training 2

3.0 DEFINITIONS 2

4.0 BACKGROUND AND CAUTIONS 3

5.0 EQUIPMENT 3

6.0 PROCEDURE 4
- 6.1 Preparation of Samples and Documentation for Transmittal 4
- 6.2 Transport and Receipt of Samples and Documents 7
- 6.3 Assessment of Screening 8
- 6.4 Admittance of Samples and Documents to the SMF 8

7.0 REFERENCES 10

8.0 RECORDS 10

9.0 ATTACHMENTS 10

TRANSPORTATION, RECEIPT, AND ADMITTANCE OF BOREHOLE SAMPLES FOR THE SAMPLE MANAGEMENT FACILITY

1.0 PURPOSE

The purpose of this procedure is to facilitate the transport, handling, tracking, documentation, and admittance of borehole samples after their shipment from the drill site and their subsequent arrival at the Environmental Restoration (ER) Program Sample Management Facility (SMF). The procedure also ensures that the levels of radioactive and non-radioactive contamination in borehole samples are evaluated prior to being admitted to the SMF.

2.0 SCOPE

2.1 Applicability

This procedure applies to all SMF staff involved with the transport, receipt, and admittance of samples collected from ER Program boreholes. It is also applicable to any other ER Program personnel assisting in the activities included in this procedure.

2.2 Training

SMF staff and any other ER Program personnel performing activities within the scope of this standard operating procedure (SOP) will be trained to this procedure before conducting work, and will certify they have read and understood this procedure and the SOPs comprising general instructions (Section 1.0 of the LANL-ER-SOPs).

3.0 DEFINITIONS

A. Existence Code: A designator that describes the existence condition of a borehole sample.

B. Core: A core is a cylindrical section of rock, or fragment thereof, that is taken as a sample of the interval penetrated by a core bit and that is brought to the surface for examination and/or analysis.

C. Cuttings: Cuttings are chips of rock produced during drilling that are removed from the borehole by circulation of drilling fluids (gas, foam, or liquid).

D. Information Block: An information block is an object placed in a sample container. The block represents a depth interval and provides information pertaining to the status of that interval.

E. Rubble: Rubble consists of fragments of core from a single interval, the individual diameters of which average less than one half the diameter of the whole core.

F. Sample: A sample is a physical entity, representative of the whole, that is collected or generated for data, analysis, or testing.

G. Sample Management Facility: The SMF is the facility used for the documentation, storage, and control of borehole samples and specimens collected and distributed for analysis and evaluation by ER Program personnel. The SMF consists of physical facilities and equipment designed to effectively process and preserve collected borehole samples.

H. Sample Type: Sample type designates the type of material that makes up a sample, i.e., core or cuttings.

I. Specimen: A specimen is a subsection or portion that has been removed from a sample or remnant that undergoes testing, analysis, or other technical or scientific evaluation and is tracked individually. It may also be referred to as an analytical sample.

J. Unique Identifier: A unique identifier (ID) is a designation that sets a documentable object or event apart from similar entities. It may be an assigned number, a name, and alphanumeric designation, or a set of data items that collectively serve to specify an entity. Examples of unique identifiers used in this procedure include Borehole ID, Container ID, Sample ID, or Specimen ID.

4.0 BACKGROUND AND CAUTIONS

A. This procedure is limited to the activities necessary to transport borehole samples from operable unit (OU) drill sites to the SMF where they are received, have their identity confirmed, and admitted. The category of borehole samples controlled by this procedure are primarily collected for geologic and hydrologic characterization. This procedure does not address the transport of samples collected exclusively for field monitoring or laboratory analysis for hazardous wastes or radiation levels.

B. All borehole samples submitted to the ER Program SMF must be accompanied by documentation stating that the samples have undergone field or laboratory screening for radiological and non-radiological contamination. This certification of screening shall state the levels of radiological and chemical contaminants of the samples.

5.0 EQUIPMENT

Equipment necessary for this procedure will include, but is not limited to:

Transport vehicle
Core marking supplies
Measuring rulers marked in tenths of a foot

6.0 PROCEDURE

Introduction

Borehole samples collected and temporarily stored at OU drill sites will be transferred to the SMF for processing and storage. This procedure describes the methods necessary to ensure that samples are correctly packaged, shipped, and documented so that the samples, containers, and associated records arrive at the SMF in acceptable condition, available for processing, examination, and storage.

This procedure is also designed to minimize the occurrence of discrepancies and errors and to correct these errors before they become part of the permanent record. These errors may include; clerical and handling discrepancies occurring during transport preparation; unsuitable packaging of samples; improper or missing documentation or improper annotation of samples or containers; or errors associated with processing and storage at the SMF.

6.1 Preparation of Samples and Documentation for Transmittal

6.1.1 Before shipping a group of borehole sample containers from the drill site to the SMF, the field personnel maintaining custody of the samples shall complete a Field Container Summary and Transmittal Form (Transmittal Form). This form may be computer generated if the field site is so equipped (Attachment A), or a version of the form may be completed by hand (Attachment B) if no computer is available. The Transmittal Form shall contain the following information:

a. Borehole ID.

b. Number of containers included in the shipment.

c. Date of the shipment.

d. A list of the containers included in the shipment, containing the following information for each:

   i. Container ID (FCT designator).

   ii. Sample type (core, cuttings, or other sample).

   iii. Sequential container number with respect to other containers from the same borehole of the same sample type.

   iv. Depth interval (of container).

e. For each container, a list of all included depth intervals and their existence codes.

Note: Existence codes may include the following:

i. REC - A sample recovered from the borehole and included within the container.

ii. UNREC - An interval for which no samples were successfully recovered.

iii. NAT - A drilled interval during which no sample recovery was attempted.

iv. WCR - A field whole core sample (analytical sample) removed from the core before the boxing of the container interval, in accordance with LANL-ER-SOP-12.01.

v. LOST - A sample that was recovered, but is unaccounted for during container loading.

vi. DEST - A sample accidentally destroyed before loading into its container.

f. A description of the documentation supplied with the sample shipment.

Note: The cumulative sample shipments for each borehole shall include the following:

i. Field Photographic Log.

ii. Field Video Log (If applicable).

iii. Daily Drilling Summary.

iv. Field Analytical Sample Removal Checklist (Removal Checklist).

v. Core Sample Log.

vi. Field Bit Cuttings Log (If applicable).

vii. Core Videotape(If applicable).

viii. Certification of Screening Levels.

6.1.2 The field personnel maintaining custody of the samples will ensure that field and/or laboratory screening has been completed for radioactive and non-radioactive contaminant levels. Documentation stating that levels of radiological and non-radiological contaminants of the samples are within SMF health and safety based Acceptance Criteria (see Table 1) will be signed by on-site monitoring personnel. Only samples that have been certified to be within acceptable levels will be transported to the SMF.

TABLE 1

SMF ACCEPTANCE CRITERIA

Hazard	Acceptance Level	Method
Penetrating Radiation*	<100, 000 dpm/100 cm^2 at a distance of 1 inch from the sample material	gross beta/gamma
Radon	<3.8 pCi/L	portable radon detector
Tritium	<220, 000 pCi/ml	portable tritium monitor, or liquid scintillation counting for samples taken from tritium contaminated areas.
Beta/Gamma Contaminated Particulates*	<100, 000 dpm/100 cm^2	various methods, including direct reading instruments, swipes, and smears
Alpha Contaminated Particulates*	<1000 dpm/100 cm^2	various methods, including direct reading instruments, swipes, and smears
Volatile Organic Compounds*	<5.9 ppm total VOC	PID[1], FID[2], colorimetric indicator tubes
Metals	acceptable exposure limits[3]	EPA method SW 6010

1 Photo ionization Detector
2 Flame Ionization Detector
3 Acceptable level (ppm) = species specific occupational exposure limit (mg/m^3) /10 (mg/m^3)
* Hazards suitable for detection with field screeining instruments.

6.1.3 The certification will provide field readings for beta/gamma, alpha, and volatile organic compounds. Laboratory results of those hazards that can not effectively be analyzed in the field (i.e., tritium, metals, etc.) will also will be certified and provided to the SMF. Samples may be accepted for curation by the SMF If the sample's readings are below the Acceptance Criteria upp

limits. Samples will not be accepted for curation If readings are above the Acceptance Criteria limits.

6.1.4 This certification of screening levels will also establish that the samples may be shipped to the SMF in accordance with Department of Transportation regulations.

6.1.5 SMF staff will provide a vehicle for transport of borehole samples from the field to the SMF.

6.1.6 Containers will be loaded to ensure that the containers are adequately secured against displacement.

6.1.7 The SMF staff will inventory the containers and documents being loaded into the transport vehicle and check them against the Transmittal Form. When the data agree with the contents of the vehicle, the SMF Staff taking the samples from the site (SMF Courier) will sign the "Person Accepting Custody" field, and place the date and time of the transfer in the spaced provided.

6.1.8 The SMF Field Staff will inventory each container and document being loaded into the transport vehicle and check them against the Transmittal Form. They will mark the "Shipped OK" space for each container properly loaded.

6.1.9 When the data on the Transmittal Form agree with the contents of the vehicle, SMF Field Staff will sign the "Person Releasing Custody" field, and place the date and time of the transfer in the space provided.

6.2 Transport and Receipt of Samples and Documents

6.2.1 The SMF Courier will then transport the containers and documents to the SMF. Upon arrival of the containers and documentation the SMF courier will remove containers and documents from the vehicle and place them in an available receiving area.

6.2.2 An SMF Geotechnician will inventory containers and documents being unloaded from the transport vehicle and check them against the Transmittal Form. The Geotechnician will mark the "Received OK" space for each container properly unloaded.

6.2.3 When the data on the Transmittal Form agrees with the contents of the vehicle, the Geotechnician will sign the "Person Accepting Custody" field and place the date and time of transfer in the space provided.

6.2.4 The SMF Courier will inventory containers and documents being unloaded from the transport vehicle and check them against the Transmittal Form. When the data on the Transmittal Form agree with the contents of the

vehicle, the SMF Courier will sign the "Person Releasing Custody" field and place the date and time of the transfer in the spaces provided.

6.3 Assessment of Screening

6.3.1 Periodic resurveying of incoming sample materials will be performed. The frequency is dependent upon historical site information, field monitoring results, and analytical laboratory results. This determination will serve as a quality control check to ensure that no sample material exceeding health and safety based Acceptance Criteria are admitted for curation.

6.3.2 The SMF Curator will designate specific sample containers to be resurveyed based upon his/her evaluation of the potential contaminants of concern as listed in the relevant Resource Conservation and Recovery Act Facility Investigations Work Plan, field monitoring results, and laboratory analytical data (if any).

6.3.3 Sample materials will be monitored for hazards such as penetrating radiation, volatile organic compounds, and tritium. Techniques for sample material monitoring will be carried out in compliance with the latest revision of: 1) Los Alamos National Laboratory (the Laboratory) Radiological Control Manual (for radiation); and 2) the Laboratory Environmental, Safety, and Health Manual - Administrative Requirement 6-2 (for volatile organic compounds).

6.3.4 The results of any sample material hazard survey conducted at the SMF will be documented on the "Confirmation Checklist" (Attachment C) in the space provided for comments in addition to applicable records requirements described in the Laboratory Radiological Control Manual - Chapter 7, or the Laboratory Environmental, Safety, and Health Manual.

6.4 Admittance of Samples and Documents to the SMF

6.4.1 The SMF Curator will assign a group of one or more available containers to undergo the admittance portion of this procedure.

6.4.2 SMF staff will arrange containers in a work area in preparation for admittance. The SMF staff will open the lids of the containers and inspect the contents for signs of damage or disruption that may have been sustained during transport.

6.4.3 SMF staff will generate a Confirmation Checklist using data from the Transmittal Form and the Removal Checklist, containing as a minimum the following items:

a. A list of containers included in the assignment with the following data for each:

   i. Container ID.

ii. Borehole ID.

iii. Sequential container number.

iv. Sample type (core, cuttings, or other sample).

b. For each container, a list of all included sample intervals, and their existence codes.

c. Date the Confirmation Checklist was prepared.

d. For each interval, spaces for notations, corrections, and comments regarding status of samples, and a verification line for the SMF Geotechnician to initial after confirmation of sample data.

e. Signature lines for the SMF Geotechnician and Curator to document the completion of the Confirmation Checklist.

f. A page mark indicating the total number of pages in the Confirmation Checklist, and the sequence of the individual page.

6.4.4 The SMF Geotechnician will compare the information contained in the Confirmation Checklist with the contents of the containers, checking for the following conditions:

a. Container IDs should match those on container labels.

b. Existence codes should match the samples or information blocks within the indicated container.

c. All field core analytical samples documented on the information blocks in containers should have been recorded on the Removal Checklist.

d. All depths marked on samples should be consistent with those recorded on the container labels and with the intervals given on the Confirmation Checklist.

6.4.5 The SMF Geotechnician will initial each sample interval in the space provided when the information is confirmed or corrected.

6.4.6 The SMF Geotechnician will sign and date each page of the completed Confirmation Checklist in the spaces provided and submit it to the Curator. The SMF Geotechnician will also submit the Transmittal Form and the Removal Checklist to the Curator or designee.

6.4.7 The SMF Geotechnician will submit remaining documents received to the Administrative Secretary.

6.4.8 The Curator or designee verifies that the Confirmation Checklist, Removal Checklist, and Transmittal Form are completely and correctly filled out. The Curator or designee will sign and date each page in the spaces provided and submit them to the Administrative Secretary.

6.4.9 The Administrative Assistant will photocopy, compile, and submit records generated or received under this procedure to the ER Records Processing Facility according to the procedure for the Laboratory ER Records Management (LANL-ER-AP-02.1).

6.4.10 Upon the completion of the admittance process containers of samples will be stored under chain of custody control at the SMF until processing or examination is necessary.

7.0 REFERENCES

LANL-ER-QPP, Quality Program Plan for Environmental Restoration Activities
LANL-ER-SOP-1.01, General Instructions for Field Investigations
LANL-ER-SOP-1.02, Sample Containers and Preservation
LANL-ER-SOP-1.03, Handling, Packaging, and Shipping of Samples
LANL-ER-SOP-1.04, Sample Control and Field Documentation
LANL-ER-SOP-4.01, Drilling Methods and Drill Site Management
LANL-ER-SOP-12.01, Field Logging, Handling, and Documentation of Borehole Materials

"Branch Technical Procedure: Transport, Receipt, Admittance, and Processing of Borehole Samples for the SMF," 1989, Yucca Mountain Project Office, Las Vegas, NV

ER Program Sample Management Facility Contaminant Criteria for the Acceptance of Samples, February 8, 1994

8.0 RECORDS

Field Container Summary and Transmittal Form

Confirmation Checklist

The SMF Administrative Secretary is ultimately responsible for the transfer of these records to the ER Records Processing Facility in accordance with the procedure for the Laboratory ER Records Management (LANL-ER-AP-02.1).

9.0 ATTACHMENTS

Attachment A - Field Container Summary and Transmittal Form (Data Base Generated version)
Attachment B - Field Container Summary and Transmittal Form (Non-computer generated version)
Attachment C - Confirmation Checklist (NOTE: Data Base Generated)

Los Alamos National Laboratory Environmental Restoration Program
SAMPLE MANAGEMENT FACILITY FIELD CONTAINER SUMMARY TRANSMITTAL FORM

BOREHOLE ID:

Page ____ of ____

SAMPLE CONTAINER TOTAL:_____

EXISTENCE CODES
REC - A sample recovered from the borehole and included within the container
UNREC - An interval for which no samples were successfully recovered
NAT - A drilled interval during which no sample recovery was attempted
SPC_Fld - A field specimen (analytical sample) removed from the core before the boxing of the container interval
LOST - A sample that was recovered, but is unaccounted for during container loading
DEST - A sample accidentally destroyed before loading into its container

DOCUMENTATION	ARRIVED AT SMF ?

FIELD SITE TO TRANSPORT	
PERSON ACCEPTING CUSTODY	DATE AND TIME
PERSON RELEASING CUSTODY	DATE AND TIME

TRANSPORT TO SMF	
PERSON ACCEPTING CUSTODY	DATE AND TIME
PERSON RELEASING CUSTODY	DATE AND TIME

FCT Number	BOX INTERVAL TOP	BOX INTERVAL BOTTOM	SEQUENTIAL BOX NUMBER	SAMPLE TYPE	SHIPPED OK	RECEIVED OK	SAMPLE INTERVALS TOP	SAMPLE INTERVALS BOTTOM	SAMPLE INTERVALS EXISTENCE

For SMF Use

Checked By:_____ **Date:**_____

LOS ALAMOS NATIONAL LABORATORY ENVIRONMENTAL RESTORATION PROGRAM | Page __ of __

SAMPLE MANAGEMENT FACILITY | **FIELD CONTAINER SUMMARY AND TRANSMITTAL FORM**

Field Site to Transport		Transport to SMF		
Person Releasing Custody	Date & Time	Person Releasing Custody		Date & Time
Person Accepting Custody	Date & Time	Person Accepting Custody		Date & Time
Checked By	Date & Time	Borehole ID	TA/OU	Shipment Container Total

Documentation	Received at SMF

Sample Type	FCT Bar Code Number	Existance Code	Container or Sample Interval	Rec'd 4

Sample Type	FCT Bar Code Number	Existance Code	Container or Sample Interval	Rec'd 4

SAMPLE EXISTANCE CODES: REC: Recovered UNREC: Unrecovered NAT: Not Attempted WCR: Whole Core Removed LOST: Lost DEST: Destroyed

Los Alamos National Laboratory Environmental Restoration Program
SAMPLE MANAGEMENT FACILITY CONFIRMATION CHECKLIST

Box ID	Of	Borehole			Top	Bottom	Sample Type	Box Number
		Sample ID	Top	Bottom	Existence			Comments/Corrections
300671		**053**			**0.0**	**16.0**	**Core**	**001**
		000002	0.0	10.0	NAT			
		000003	10.0	16.0	REC			Geotechnician
300672		**053**			**16.0**	**22.0**	**Core**	**002**
		000004	16.0	22.0	REC			
300673		**053**			**22.0**	**28.0**	**Core**	**003**
		000005	22.0	28.0	REC			
300674		**053**			**28.0**	**200.0**	**Core**	**004**
		000006	28.0	32.0	REC			Curator
		000007	32.0	200.0	NAT			
300675		**053**			**200.0**	**205.9**	**Core**	**005**
		000008	200.0	205.9	REC			
300676		**053**			**205.9**	**211.9**	**Core**	**006**
		000009	205.9	211.9	REC			
300677		**053**			**211.9**	**221.0**	**Core**	**007**
		000010	211.9	216.0	REC			
		000011	216.0	218.0	WCR			
		000012	218.0	219.8	REC			
		000013	219.8	221.0	WCR			
300678		**053**			**221.0**	**227.0**	**Core**	**008**
		000014	221.0	227.0	REC			
300679		**053**			**227.0**	**233.0**	**Core**	**009**
		000015	227.0	233.0	REC			
300680		**053**			**233.0**	**350.2**	**Core**	**010**
		000016	233.0	238.7	REC			
		000017	238.7	350.2	UNREC			

LOS ALAMOS NATIONAL LABORATORY ENVIRONMENTAL RESTORATION PROGRAM	Page __ of __
SAMPLE MANAGEMENT FACILITY	FIELD CONTAINER SUMMARY AND TRANSMITTAL FORM

Field Site to Transport		Transport to SMF		
Person Releasing Custody	Date & Time	Person Releasing Custody		Date & Time
Person Accepting Custody	Date & Time	Person Accepting Custody		Date & Time
Checked By	Date & Time	Borehole ID	TA/OU	Shipment Container Total

Documentation	Received at SMF

Sample Type	FCT Bar Code Number	Existance Code	Container or Sample Interval	Rec'd 4

Sample Type	FCT Bar Code Number	Existance Code	Container or Sample Interval	Rec'd 4

SAMPLE EXISTANCE CODES: REC: Recovered UNREC: Unrecovered NAT: Not Attempted WCR: Whole Core Removed LOST: Lost DEST: Destroyed

Los Alamos National Laboratory Environmental Restoration Program
SAMPLE MANAGEMENT FACILITY FIELD CONTAINER SUMMARY TRANSMITTAL FORM

Page ____ of ____

BOREHOLE ID:

SAMPLE CONTAINER TOTAL:_____

EXISTENCE CODES
REC - A sample recovered from the borehole and included within the container
UNREC - An interval for which no samples were successfully recovered
NAT - A drilled interval during which no sample recovery was attempted
SPC_Fld - A field specimen (analytical sample) removed from the core before the boxing of the container interval
LOST - A sample that was recovered, but is unaccounted for during container loading
DEST - A sample accidentally destroyed before loading into its container

DOCUMENTATION	ARRIVED AT SMF ?

FIELD SITE TO TRANSPORT	
PERSON ACCEPTING CUSTODY	DATE AND TIME
PERSON RELEASING CUSTODY	DATE AND TIME

TRANSPORT TO SMF	
PERSON ACCEPTING CUSTODY	DATE AND TIME
PERSON RELEASING CUSTODY	DATE AND TIME

FCT Number	BOX INTERVAL TOP	BOX INTERVAL BOTTOM	SEQUENTIAL BOX NUMBER	SAMPLE TYPE	SHIPPED OK	RECEIVED OK	SAMPLE INTERVALS TOP	SAMPLE INTERVALS BOTTOM	SAMPLE INTERVALS EXISTENCE

For SMF Use

Checked By:_____ **Date:**_____

Los Alamos National Laboratory Environmental Restoration Program
SAMPLE MANAGEMENT FACILITY CONFIRMATION CHECKLIST

Box ID	Of	Borehole			Top	Bottom	Sample Type	Box Number
		Sample ID	Top	Bottom	Existence			Comments/Corrections
300671		053			0.0	16.0	Core	001
		000002	0.0	10.0	NAT			
		000003	10.0	16.0	REC			
300672		053			16.0	22.0	Core	002
		000004	16.0	22.0	REC			
300673		053			22.0	28.0	Core	003
		000005	22.0	28.0	REC			
300674		053			28.0	200.0	Core	004
		000006	28.0	32.0	REC			
		000007	32.0	200.0	NAT			
300675		053			200.0	205.9	Core	005
		000008	200.0	205.9	REC			
300676		053			205.9	211.9	Core	006
		000009	205.9	211.9	REC			
300677		053			211.9	221.0	Core	007
		000010	211.9	216.0	REC			
		000011	216.0	218.0	WCR			
		000012	218.0	219.8	REC			
		000013	219.8	221.0	WCR			
300678		053			221.0	227.0	Core	008
		000014	221.0	227.0	REC			
300679		053			227.0	233.0	Core	009
		000015	227.0	233.0	REC			
300680		053			233.0	350.2	Core	010
		000016	233.0	238.7	REC			
		000017	238.7	350.2	UNREC			

Geotechnician_____ Date_____ Curator_____

LANL-ER-SOP-12.02, R1

Los Alamos National Laboratory **Environmental Restoration Program** Standard Operating Procedure	No: LANL-ER-SOP-12.03 Rev: 0

ACCEPTANCE OF NON-BOREHOLE SAMPLES BY THE SAMPLE MANAGEMENT FACILITY

Prepared by	E. Dow Davidson, Jr. (Print Name)	(Signature)	05-17-94 (Date)
Quality Review by	G. Thomas Farmer (Print Name)	G. Thomas Farmer (Signature)	5-18-94 (Date)
Technical Review by	Greg Bayhurst (Print Name)	Greg Bayhurst (Signature)	5-17-94 (Date)
PM Approval	David McInroy (Print Name)	(Signature)	20 MAY 94 (Date)
QPPL Approval	Larry Souza (Print Name)	L. G. Souza (Signature)	5/19/94 (Date)

Effective Date: 5/25/94

ACCEPTANCE OF NON-BOREHOLE SAMPLES BY THE SAMPLE MANAGEMENT FACILITY

Contents

1.0 PURPOSE 2

2.0 SCOPE 2
- 2.1 Applicability 2
- 2.2 Training 2

3.0 DEFINITIONS 2
- 3.1 Sample Management Organization 2
- 3.2 Sample Management Facility 2
- 3.3 Sample 3
- 3.4 Collector 3

4.0 BACKGROUND AND CAUTIONS 3

5.0 EQUIPMENT 3

6.0 PROCEDURES 3
- 6.1 Responsibilities for Curation of ER Project Samples and Documents 3
- 6.2 Acceptance for Curation of Samples and Documents 3
- 6.3 Transfer of Custody of Samples 4
- 6.4 FIMAD Unique Sample Number 5
- 6.5 Containerization and Labeling of Samples 5
- 6.6 Sample Storage 5
- 6.7 Verification 6
- 6.8 Records Storage 6

7.0 REFERENCES 6

8.0 RECORDS 6

9.0 ATTACHMENTS 6

ACCEPTANCE OF NON-BOREHOLE SAMPLES BY THE SAMPLE MANAGEMENT FACILITY

1.0 PURPOSE

This procedure provides instructions for the acceptance of non-borehole samples by the Environmental Restoration (ER) Program Sample Management Facility (SMF). The implementation of this procedure ensures that non-borehole samples will be correctly identified and documented upon acceptance for curation by the SMF.

2.0 SCOPE

This procedure includes activities required to accept non-borehole samples for curation at the SMF. Only samples collected in support of the Los Alamos National Laboratory (the Laboratory) ER Program's Resource Conservation and Recovery Act (RCRA) Field Investigation (RFI) are within the scope of the procedure.

2.1 Applicability

This procedure applies to Sample Management Organization (SMO) staff performing functions related to acceptance of selected non-borehole samples at the SMF for curation.

2.2 Training

SMF staff will be trained to this procedure before conducting work, and will document they have read and understand this procedure.

3.0 DEFINITIONS

3.1 Sample Management Organization

SMO is the organization responsible for the collection, documentation, storage, and control of selected samples, and records collected and distributed for analysis and evaluation. SMO includes the SMF and Field Operations. SMO staff consists of management and operations personnel who ensure that SMO operations and documentation satisfy applicable regulatory requirements. SMO is operated by the ER Program Subsurface Technologies Technical Team.

3.2 Sample Management Facility

The SMF is the facility (Building TA-3-271) used for the documentation, examination, physical processing, storage, and control of selected samples, remnants, and records collected and distributed for the ER Program. The SMF consists of a physical facility and equipment designed to effectively process and preserve these samples, remnants, and records.

3.3 Sample

Sample: A sample is a physical entity, collected in the field, representative of the whole, that is the original source material for all subsequent analyses and testing activities.

3.4 Collector

A Collector is an Operable Unit worker or other ER Program representative who submits samples or documents to the SMF for curation.

4.0 BACKGROUND AND CAUTIONS

N/A

5.0 EQUIPMENT

N/A

6.0 PROCEDURES

6.1 Responsibilities for Curation of ER Project Samples and Documents

Various types of samples will be collected and documents generated in support of the ER program RFI at the Laboratory. Borehole samples will normally be curated by the SMF because of the expense and difficulty of redrilling and collecting samples. Because non-borehole samples normally represent much lower recollection costs these samples may be stored and managed by individual collectors. However, non-borehole samples may be submitted to the SMF for acceptance and curation.

6.2 Acceptance for Curation of Samples and Documents

After collection of samples intended for use for the ER Program, a Collector shall submit a completed Sample Collection Report (Attachment A) with all samples collected and/or submitted to the SMF for curation. This report shall be completed prior to submission of the samples to the SMF. In addition, the Collector shall submit a document that establishes the levels of radiological and non-radiological contaminants for each sample being considered for acceptance by the SMF. The document will provide readings for beta/gamma, alpha, and volatile organic compounds. This documentary evidence will provide field screening or laboratory levels that may be compared to SMF health and safety based Acceptance Criteria. Samples may be accepted for curation by the SMF If the sample's readings are below the Acceptance Criteria. Samples will not be accepted for curation If readings are above the Acceptance Criteria. Acceptance Criteria are listed in

Table 1. Those hazards that can be evaluated by means of field screening instruments are indicated.

TABLE 1

SMF ACCEPTANCE CRITERIA

Hazard	Acceptance Level	Method
Penetrating Radiation*	<100, 000 dpm/100 cm^2 at a distance of 1 inch from the sample material	gross beta/gamma
Radon	<3.8 pCi/L	portable radon detector
Tritium	<220, 000 pCi/ml	portable tritium monitor, or liquid scintillation counting for samples taken from tritium contaminated areas.
Beta/Gamma Contaminated Particulates*	<100, 000 dpm/100 cm^2	various methods, including direct reading instruments, swipes, and smears
Alpha Contaminated Particulates*	<1000 dpm/100 cm^2	various methods, including direct reading instruments, swipes, and smears
Volatile Organic Compounds*	<5.9 ppm total VOC	PID[1], FID[2], colorimetric indicator tubes
Metals	acceptable exposure limits[3]	EPA method SW 6010

1 Photo ionization Detector
2 Flame Ionization Detector
3 Acceptable level (ppm) = species specific occupational exposure limit (mg/m^3) /10 (mg/m^3)
* Hazards suitable for detection with field screeining instruments.

6.3 Transfer of Custody of Samples

Upon arrival at the SMF, the Collector will register at the Reception Area. Sam or sample containers will not be brought into the SMF until SMF staff have

determined that the Collector's screening documentation establishes that the contamination levels of the samples are below SMF Acceptance Criteria. If samples are cleared for acceptance they may be unloaded and placed in the Sample Storage Area or other appropriate area. Additional screening may be performed at the SMF.

SMF staff will determine if the following information is completed on each Sample Collection Report: the date sample was collected, and person releasing custody and organization. Other information should include sample type; type of field site; collection location; sample weight, volume or dimensions; and the Facility for Information Management And Display (FIMAD) unique sample number (if available); storage requirements; and verification that the sample meets SMF Acceptance Criteria.

SMF staff will determine if all SMF bar code labels have been properly applied to the sample (if possible), inside the sample container, on the outside of the sample container, and on the Sample Collection Report. If a photograph of the sample at its acquisition site is submitted with the sample, a bar code label should appear on the back of the photograph.

When the sample and Sample Collection Report are submitted to the SMF, the Collector and the SMF staff member completing the custody change will sign and date the Sample Collection Report. A copy of the report will be given to the Collector.

6.4 FIMAD Unique Sample Number

The FIMAD system documents provenience for samples. If the FIMAD unique sample number is available only the name of the Collector and the FIMAD unique sample number is required to be provided by the Collector on the Sample Collection Report. The Person Releasing Custody field must be completed.

6.5 Containerization and Labeling of Samples

The sample will be placed in an appropriate container, depending upon the type of sample. Information from the Sample Collection Report will be used to generate container labels for the sample and will contain the SMF bar code number, FIMAD unique sample number (if available), sample type, collection location, Collector, date of collection, date of receipt by the SMF, and date of storage. These labels will then be affixed to the appropriate sample containers. The container will be sealed according to the specifications of the Collector.

6.6 Sample Storage

The container will be assigned a storage location (e.g., storage racks, shelves), depending upon the type of storage container and appropriate environmental conditions (e.g., shelf life, temperature) designated by the Collector. Storage location and date and time of storage will be recorded on the Sample Collection

Report. If samples are not placed in permanent storage immediately, they will be placed in a designated temporary storage area maintained at required environmental conditions.

6.7 Verification

After completion of the Sample Collection Report, an SMF staff member will verify that the report has been properly completed by signing and dating the form. This signature also indicates the SMF staff member who received and verified the Sample Collection Report if no sample was submitted with the report.

6.8 Records Storage

All documents and records submitted to the SMF for curation will be submitted to the RPF. Working copies will be retained in the SMF Documents File. Access to these documents and records will be obtained through authorization by the Curator.

7.0 REFERENCES

LANL-ER-QPP, Quality Program Plan for Environmental Restoration Activities
LANL-ER-SOP-12.01, Field Logging, Handling, and Documentation of Borehole Materials
LANL-ER-SOP-12.02, Transportation, Receipt, and Admittance of Borehole Samples for the SMF

"Branch Technical Procedure: Sample Management for the Yucca Mountain Project Office," 1989, Yucca Mountain Project Office, Las Vegas, NV

8.0 RECORDS

Sample Collection Report

The Sample Management Facility is ultimately responsible for transfer of these records to the ER Records Processing Facility in accordance with the procedure for the Laboratory's ER Records Management (LANL-ER-AP-02.1)

9.0 ATTACHMENTS

Attachment A - Sample Collection Report

LOS ALAMOS NATIONAL LABORATORY ENVIRONMENTAL RESTORATION PROGRAM

SAMPLE MANAGEMENT FACILITY

SAMPLE COLLECTION REPORT

SMF BAR CODE		FIMAD No.	Collectors No.	Sample Type	***SMF ONLY***
					Meets AC?
Storage Requirements	Sample weight, volume, etc.	Collection Location	Type of Site	Date Sample Collected	***Assigned Storage***

SMF BAR CODE		FIMAD No.	Collectors No.	Sample Type	***SMF ONLY***
					Meets AC?
Storage Requirements	Sample weight, volume, etc.	Collection Location	Type of Site	Date Sample Collected	***Assigned Storage***

SMF BAR CODE		FIMAD No.	Collectors No.	Sample Type	***SMF ONLY***
					Meets AC?
Storage Requirements	Sample weight, volume, etc.	Collection Location	Type of Site	Date Sample Collected	***Assigned Storage***

SMF BAR CODE		FIMAD No.	Collectors No.	Sample Type	***SMF ONLY***
					Meets AC?
Storage Requirements	Sample weight, volume, etc.	Collection Location	Type of Site	Date Sample Collected	***Assigned Storage***

SMF BAR CODE		FIMAD No.	Collectors No.	Sample Type	***SMF ONLY***
					Meets AC?
Storage Requirements	Sample weight, volume, etc.	Collection Location	Type of Site	Date Sample Collected	***Assigned Storage***

Person Releasing Custody	Date	Total Samples On This Page: _____
		Date Entered in DB: _____
Person Accepting Custody	Date	Verified By

LOS ALAMOS NATIONAL LABORATORY ENVIRONMENTAL RESTORATION PROGRAM

SAMPLE MANAGEMENT FACILITY

SAMPLE COLLECTION REPORT

SMF BAR CODE		FIMAD No.	Collectors No.	Sample Type	*SMF ONLY*
					Meets AC?
Storage Requirements	Sample weight, volume, etc.	Collection Location	Type of Site	Date Sample Collected	*Assigned Storage*

SMF BAR CODE		FIMAD No.	Collectors No.	Sample Type	*SMF ONLY*
					Meets AC?
Storage Requirements	Sample weight, volume, etc.	Collection Location	Type of Site	Date Sample Collected	*Assigned Storage*

SMF BAR CODE		FIMAD No.	Collectors No.	Sample Type	*SMF ONLY*
					Meets AC?
Storage Requirements	Sample weight, volume, etc.	Collection Location	Type of Site	Date Sample Collected	*Assigned Storage*

SMF BAR CODE		FIMAD No.	Collectors No.	Sample Type	*SMF ONLY*
					Meets AC?
Storage Requirements	Sample weight, volume, etc.	Collection Location	Type of Site	Date Sample Collected	*Assigned Storage*

SMF BAR CODE		FIMAD No.	Collectors No.	Sample Type	*SMF ONLY*
					Meets AC?
Storage Requirements	Sample weight, volume, etc.	Collection Location	Type of Site	Date Sample Collected	*Assigned Storage*

Person Releasing Custody	Date	Total Samples On This Page: _____
		Date Entered in DB: _____
Person Accepting Custody	Date	Verified By

Los Alamos National Laboratory **Environmental Restoration Program** Standard Operating Procedure	No: LANL-ER-SOP-12.04 Rev: 0

PHYSICAL PROCESSING AND STORAGE OF BOREHOLE SAMPLES AT THE SAMPLE MANAGEMENT FACILITY

Prepared by	Dow Davidson (Print Name)	(Signature)	05-31-94 (Date)
Quality Review by	Thomas Farmer (Print Name)	D. Thomas Farmer (Signature)	6-1-94 (Date)
Technical Review by	Greg Bayhurst (Print Name)	Greg Bayhurst (Signature)	5-27-94 (Date)
PM Approval	David McInroy (Print Name)	(Signature)	6/9/94 (Date)
QPPL Approval	Larry Souza (Print Name)	(Signature)	6/7/94 (Date)

Effective Date: 6/13/94

PHYSICAL PROCESSING AND STORAGE OF BOREHOLE SAMPLES AT THE SAMPLE MANAGEMENT FACILITY

Contents

1.0 PURPOSE 1

2.0 SCOPE 1
- 2.1 Applicability 1
- 2.2 Training 1

3.0 DEFINITIONS 1

4.0 BACKGROUND AND CAUTIONS 2

5.0 EQUIPMENT 3

6.0 PROCEDURE 3
- 6.1 Core Processing Documentation 3
- 6.2 Container Preparation and Core Marking 4
- 6.3 Core Slabbing and Bagging of Rubble 5
- 6.4 Final Slabbed Core Marking 5
- 6.5 Core Photography 5
- 6.6 Bagging of Core 6
- 6.7 Cuttings Processing 6
- 6.8 Sample Storage 7

7.0 REFERENCES 7

8.0 RECORDS 8

9.0 ATTACHMENTS 8

PHYSICAL PROCESSING AND STORAGE OF BOREHOLE SAMPLES AT THE SAMPLE MANAGEMENT FACILITY

1.0 PURPOSE

The purpose of this procedure is to facilitate the physical processing and storage of borehole samples at the Environmental Restoration (ER) Program Sample Management Facility (SMF).

2.0 SCOPE

2.1 Applicability

This procedure applies to all SMF staff performing physical processing and storage of samples collected from ER Program boreholes.

2.2 Training

SMF staff and any other ER Program personnel performing activities within the scope of this standard operating procedure (SOP) will be trained to this procedure before conducting work, and will certify they have read and understood this procedure and the SOPs comprising general instructions (Section 1.0 of the LANL-ER-SOPs).

3.0 DEFINITIONS

A. Analytical Sample: An analytical sample is a subsection or portion which has been removed from a sample that undergoes testing, analysis, or other technical or scientific evaluation. It is also referred to as a specimen.

Archival-Research Borehole Sample Processing System: The arc al-research borehole sample processing system of sample curation is based up splitting a representative sample of core or cuttings from the total collected sample, one of which is preserved as an archive (archival split), the other of which is available for research and analysis (research split).

C. Core: A core is a cylindrical section of rock, or fragment thereof, that is taken as a sample of the interval penetrated by a core bit and that is brought to the surface for examination and/or analysis.

D. Curatorial Sample Inventory and Tracking System: The Curatorial Sample Inventory and Tracking System (MacCSITS) is the Macintosh based computer data base that has been developed to track in detail all actions taken on ER Program samples over which the SMF has control. The primary objective of MacCSITS is to assist in establishing and maintaining traceable records of each sample collected for the ER Program. The MacCSITS user's manuals and other related documents will be available to users.

E. Cuttings: Cuttings are chips of rock produced during drilling that are removed from the borehole by circulation of drilling fluids (gas, foam, or liquid).

F. Existence Code: A designator that describes the existence condition of a borehole sample.

G. Information Block: An information block is an object placed in a sample container. The block represents a depth interval and provides information pertaining to the status of that interval.

H. Rubble: Rubble consists of fragments of core from a single interval, the individual diameters of which average less than one half the diameter of the whole core.

I. Sample Management Facility: The SMF is the facility used for the documentation, storage, and control of borehole samples and specimens collected and distributed for analysis and evaluation by ER Program personnel. The SMF consists of physical facilities and equipment designed to effectively process and preserve collected borehole samples.

J. Sample Type: Sample type designates the type of material that makes up a sample, i.e., core or cuttings.

K. Sample: A sample is a physical entity, representative of the whole, that is collected or generated for data, analysis, or testing.

L. Specimen: A specimen is a subsection or portion that has been removed from a sample or remnant that undergoes testing, analysis, or other technical or scientific evaluation and is tracked individually. It may also be referred to as an analytical sample.

M. Unique Identifier: A unique identifier (ID) is a designation that sets a documentable object or event apart from similar entities. It may be an assigned number, a name and alphanumeric designation, or a set of data items that collectively serve to specify an entity. Examples of unique identifiers used in this procedure include Borehole ID, Container ID, Sample ID, or Specimen ID.

N. Whole Core Specimen: A whole core specimen is a subsection of whole core that constitutes the entire core sample recovered for the depth interval represented.

4.0 BACKGROUND AND CAUTIONS

A. The implementation of LANL-ER-SOP-12.02 will ensure that a determination is made as to the levels of radioactive and non-radioactive hazards associated with samples accepted by the SMF. This determination must be made prior to the use of this sample processing procedure. The user of this procedure is responsible for verifying that contamination levels in relation to the SMF Acceptance Criteria have been made for each sample prior to physical processing.

If sample contamination levels are **above** natural background but below the upper limits of the SMF Acceptance Criteria the following handling precautions will be taken:

1. Laboratory coats and plastic or rubber gloves will be worn while manipulating exposed sample material.

2. Eating or drinking will be prohibited in areas where these samples are open to the environment.

5.0 EQUIPMENT

Equipment necessary for this procedure may include, but is not limited to:

Core boxes and dividers
Core marking supplies
Core slabbing saw
Dust collection system for dry slabbing
Measuring rulers marked in tenths of a foot
Pneumatic staple guns
Polyethylene lay-flat tubing
Polystyrene core cradles
Work tables equipped with casters

6.0 PROCEDURE

Introduction

Borehole samples received from ER Program field sites shall be processed after arrival at the SMF and completion of confirmation and verification (LANL-ER-SOP-12.02). The purposes of processing these samples are: (1) to ensure proper identification and maintain traceability on these samples, and (2) to photo-document core. In addition to the purposes for processing, core greater than 3" diameter and cuttings optionally will be divided: (1) to prepare an archival split for future reference, and (2) to prepare a research split for data-gathering activities. Samples will undergo different phases of processing, depending upon the condition of the sample and the analytical data to be derived. At the discretion of the Curator, core greater than 3" diameter may be left whole for analytical purposes or because it is too unconsolidated for slabbing. An archival split may be cut from whole core or separated from cuttings (if cuttings have been collected and submitted to the SMF). The research split of core shall be photographed and placed in the appropriate storage location. At the discretion of the Curator, the archival split may be photographed in addition to or instead of the research split.

6.1 Core Processing Documentation

6.1.1 Information from MacCSITS will be used to generate one Core Processing Checklist (Attachment A) per box to document the various steps in the processing of whole core. The Core Processing Checklist will have as

a minimum; the container ID, the borehole ID, container depth interval, a list containing the depth interval and existence code of each sample within the container, and a list of specific steps for processing the core, with a space fo. checking the completion of each.

6.2.2 Additionally the Checklist will have apace for including any special processing instructions that may apply to a specific container. The Checklist will have spaces for recording the permanent storage location assignment for the container and signature and date spaces to document the completion of core processing. During processing, the Core Processing Checklist will be stored in a document cache mounted inside the lid of each box. Core that measures less than 3" diameter will not be slabbed. Individual steps in the Core Processing Checklist that do not apply to small bore core or core that is not being slabbed will be marked "N/A" during core processing. The Core Processing Checklist will be verified and signed off in the space provided by Curatorial Staff upon the completion of the form.

6.2 Container Preparation and Core Marking

6.2.1 Core that is not to be slabbed will remain in the same box in which it was received from the field (unless the container has been damaged). Information from MacCSITS will be used to generate five labels for each box, including container ID, borehole ID, depth interval, sequential container number and type of sample, i.e., core. Labels will be affixed to both ends of the container base and lid, and on one side of the container lid.

6.2.2 The whole core will be removed from the field core box and placed one row at a time in core trays fastened to a work table. The interior of each box will be marked at the top and bottom of each row to indicate the total depth interval represented in that row (i.e., core, unrecovered core, whole core specimens removed, etc.). For slabbed core both the archival and research core box interiors will be marked.

6.2.3 Core that is to be slabbed will require another box of the same size to be constructed and will include polystyrene cradles. Polystyrene core existence and whole core specimen blocks will be placed in the research split box at the appropriate positions, and duplicates will be made and placed in the archival split box.

6.2.4 Labels for these blocks will be generated using information in MacCSITS just as with non-slabbed core. After the core from a field box has been slabbed, the field box will hold the research split of core and the newly constructed box will hold the archival split of core. After all the core (excluding whole core specimens) from a borehole has been slabbed and boxed, a sequential box number will be marked on the box (i.e., Box 3 of 45).

6.2.5 For core not being slabbed ensure that the field markings are complete, clear and unobscured; redraw them as necessary using the process described in ER-SOP-12.01. On core that is to be slabbed, a

second set of permanent orientation stripes will be placed 180° from the existing orientation stripes on the core. The blue footage indicator will be extended with a permanent marker to completely circumscribe the core. Depth indicators will be permanently marked in blue and appropriately located on both sides of the core (Attachment B).

6.3 Core Slabbing and Bagging of Rubble

6.3.1 For core that is to be slabbed, approximately 3 ft of whole core (3" diameter or larger) from the work table will be placed in the core sawing jig with the top end to the operator's left and the original field orientation stripes facing outward toward the saw operator. The core shall be slabbed longitudinally into the approximately 1/3 archival split and 2/3 research split, each portion containing identical markings. The core will be slabbed with a diamond saw blade. Cores will be slabbed using water as the coolant-lubricant, or with a special dry-cutting sawblade. When the dry-cutting sawblade is used, a dust collection system will be used to control air quality within the saw room.

6.3.2 Rubble from core not being slabbed will be bagged in polyethylene lay-flat tubing and sealed with a heat sealer, but not split into archival and research portions. Each bag will be marked with orientation marks and depth indicators and placed in its respective box, row, and position.

6.3.3 Rubble from a core that is being slabbed will be removed from the field transport bag and laid out on the work table. An approximate 1/3 - 2/3 diameter longitudinal split will be made on the rubble sample. Each split will be rebagged separately in polyethylene lay-flat tubing and heat sealed, with a minimal amount of disturbance to the sample.

6.4 Final Slabbed Core Marking

6.4.1 After slabbing, the research split of core will be removed from the saw jig first, the archival split afterwards. Both splits of core will be laid out in the Core Processing Area, with the 1/3 and 2/3 splits placed face down, parallel to each other, and oriented correctly. Any markings that may have been obscured during slabbing shall be verified using the sample information section of the Core Processing Checklist (Attachment A) before being redrawn. The core will then be placed in its respective box, row and position.

6.5 Core Photography

6.5.1 The core, whether newly slabbed (3" diameter or larger or whole, shall be photographed to record its initial condition, position in the box, orientation, and color. The Core Photography Log (Attachment C), is used to document photography of the core, and includes borehole ID, photographer's name, film speed and f-stop, and date. Information on each exposure will include the following: exposure number, research (RCT) or

archive (ACT) bar code number, box interval, and remarks. The SMF Geotechnician will complete this log as the photographs are taken and will initial and date the action. The Log will be signed and dated by Curatorial staff after its completion to signify verification of the Log.

6.5.2 The core and labeling cards will be arranged as shown in Attachment D. Ensure all core markings, information blocks, and significant features are visible and in focus. If authorized by the Curator, moisten the core with a distilled water spray to enhance the contrast of the core's color and textures. After each exposure recheck the focus and core placement to ensure correct alignment and legibility. Upon completion of the exposure the SMF Geotechnician will replace the box lid, and remove the box from the photo stand. A minimum of two set of prints shall be maintained, one by the SMF and one by the Records Processing Facility (RPF).

6.6 Bagging of Core

6.6.1 If bagging of the processed core is deemed necessary by the Curator, it will be sealed in polyethylene lay-flat tubing as soon as it has been marked and labeled. Lengths of lay-flat tubing will be cut for each core interval. One end of each length will be sealed with a heat sealer. One side of the tubing will be marked with the top and bottom depths of the core interval near the ends. Orientation marks, red on the right and blue on the left (Attachment E), will be drawn on the plastic bag. The approximately 3 foot section of core will be laid on a contoured polystyrene cradle. The core and polystyrene cradle will then be inserted into the premarked lay-flat tubing, the excess air will be squeezed out, and the end of the tubing will be heat sealed. The sealed section of core will be placed in a protective cardboard divider pad and positioned in the box. This process will be repeated for the other row in the box.

6.6.2 Upon the completion of Core Processing, containers will be sealed with filament tape and prepared for storage.

6.7 Cuttings Processing

6.7.1 Following confirmation of samples at the SMF (LANL-ER-SOP-12.02), cuttings will be divided into archival and research splits, packaged, and stored. A Cuttings Processing Checklist (Attachment F) will be used to document the various steps in processing the cuttings samples. The Checklist contains the borehole ID, container ID and interval, sample ID and interval of each bag, and a checklist delineating each stage of processing (i.e., split, labeled).

6.7.2 At the discretion of the Curator an archival split shall be taken from each cuttings sample received at the SMF. Cuttings will be split using a riffle-type sample splitter. The amount of sample taken for the archival split shall be up to 50 percent of the entire cuttings sample, not to exceed 50 grams. The archival cuttings sample will then be placed into a pre-labeled

plastic vial with screw caps. Each vial will have a label affixed denoting borehole ID, sample interval, and ACT bar code number of that sample. The plastic vial will be kept in a storage box containing other archival cuttings samples within the storage box sample range.

6.7.3 The research cuttings sample split, which will not exceed 200 grams, will be kept in plastic vials with screw caps. Each vial will have a label affixed denoting borehole ID, sample interval, and RCT bar code number of that sample. Investigators requiring amounts of cuttings greater than 200 grams shall collect them at the borehole site and then submit a Sample Collection Report (LANL-ER-SOP-12.03) to the SMF.

6.7.4 Vials containing the research and archival splits of cuttings will be stored in separate boxes. The borehole ID, container interval, RCT or ACT bar code number (if applicable), and missing footage within that container (if applicable) will be entered into MacCSITS. Four permanent label types will be generated using information contained in MacCSITS with the aforementioned information contained on them. Boxes will be sealed with filament tape.

6.8 Sample Storage

6.8.1 A Borehole Sample Container Storage Location Log (Attachment G) is generated using the information in MacCSITS and includes the container ID, borehole ID, box number, container depth interval, sample type, the storage location, the name of the person storing the container, and the date the container was shelved. The storage areas shall be access-limited.

6.8.2 The 1/3 and 2/3 diameter splits of the processed core, as well as non-slabbed core, will be shelved separately by acquisition site and location ID system in the sample storage area (Room 110, Building 271).

6.8.3 Both the archival and research cuttings sample splits will be stored in the sample storage area in Room 110, Building 271.

7.0 REFERENCES

LANL-ER-SOP-12.01, Field Logging, Handling, and Documentation of Borehole Materials

LANL-ER-SOP-12.02, Transportation, Receipt, and Admittance of Borehole Samples for the Sample Management Facility

LANL-ER-SOP-12.03, Acceptance of Non-Borehole Samples by the Sample Management Facility

"Branch Technical Procedure: Transport, Receipt, Admittance, and Processing of Borehole Samples for the SMF," 1989, Yucca Mountain Project Office, Las Vegas, NV

ER Program Sample Management Facility Contaminant Criteria for the Acceptance of Samples, February 8, 1994

8.0 RECORDS

The SMF Administrative Secretary is ultimately responsible for the transfer of these records to the ER RPF in accordance with the procedure for Los Alamos National Laboratory ER Records Management (LANL-ER-AP-02.1)

9.0 ATTACHMENTS

Attachment A — Core Processing Checklist
Attachment B — Core Markings
Attachment C — Core Photography Log
Attachment D — Photography Set Up
Attachment E — Marks on Lay-Flat Tubing
Attachment F — Cuttings Processing Checklist
Attachment G — Borehole Sample Container Storage Location Log

Los Alamos National Laboratory Environmental Restoration Program
CORE PROCESSING CHECKLIST

Box ID	Number	Of	Borehole	Top	Bottom
00501	1	56	Example	0.0	6.0

	Research	Archive
	_____	_____
	_____	_____
3. Missing/Removed Blocks in Place?	_____	_____
4. Permanent Box Labels applied?	_____	_____
5. Depth intervals recorded at top and bottom of each box row?	_____	_____
6. Orientation marks easily visible?	_____	_____
7. Depth markers clear and legible?	_____	_____
8. Box dividers inserted?	_____	_____
9. Core in foam cradles?	_____	_____
10. Boxes photographed?	_____	_____
11. Box lids closed?	_____	_____
12. Permanent assigned shelf location:		

Sample ID	Top	Bottom	Status	Packaging	Comment
000387	0.0	4.0	REC	None	
000388					

Special Instructions: _____

SLABBED CORE ONLY

13. Duplicate boxes constructed?	_____	_____
14. Orientation marks duplicated?	_____	_____
15. Core slabbed?	_____	_____

Geotechnician _____ Date_____

Curatorial Staff _____ Date_____

Los Alamos National Laboratory Environmental Restoration Program
CORE MARKINGS

Orientation Stripes

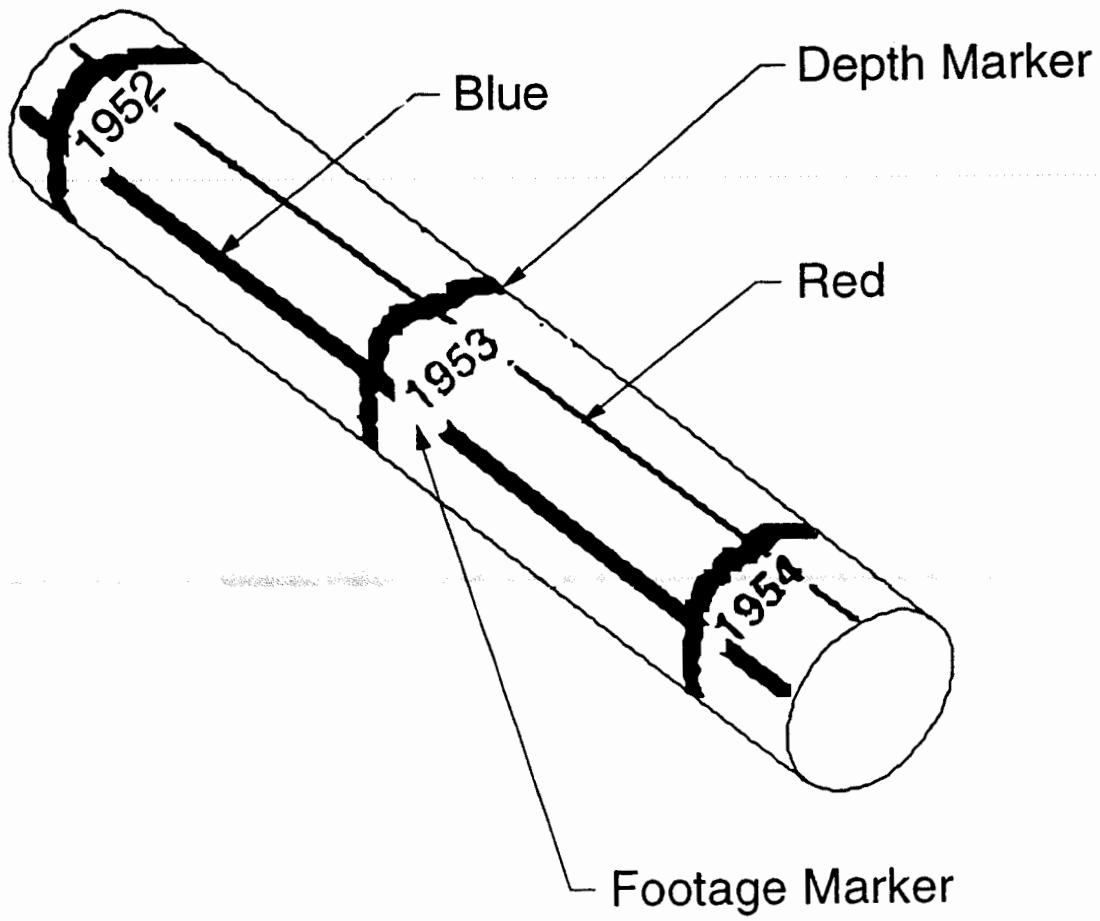

LOS ALAMOS NATIO. _ LABORATORY ENVIRONMENTAL RESTORATION PROGRAM

SAMPLE MANAGEMENT FACILITY

CORE PHOTOGRAPHY LOG

Borehole ID_____ Photographer_____ Page____of _____

Film Speed _____f-stop _____ Date _____

Exposure #	RCT/ACT Bar Code #	Box Interval	Remarks

Prepared By _____ Date _____ __ Checked By _____ Date _____

Los Alamos National Laboratory Environmental Restoration Program
PHOTOGRAPHY SET UP

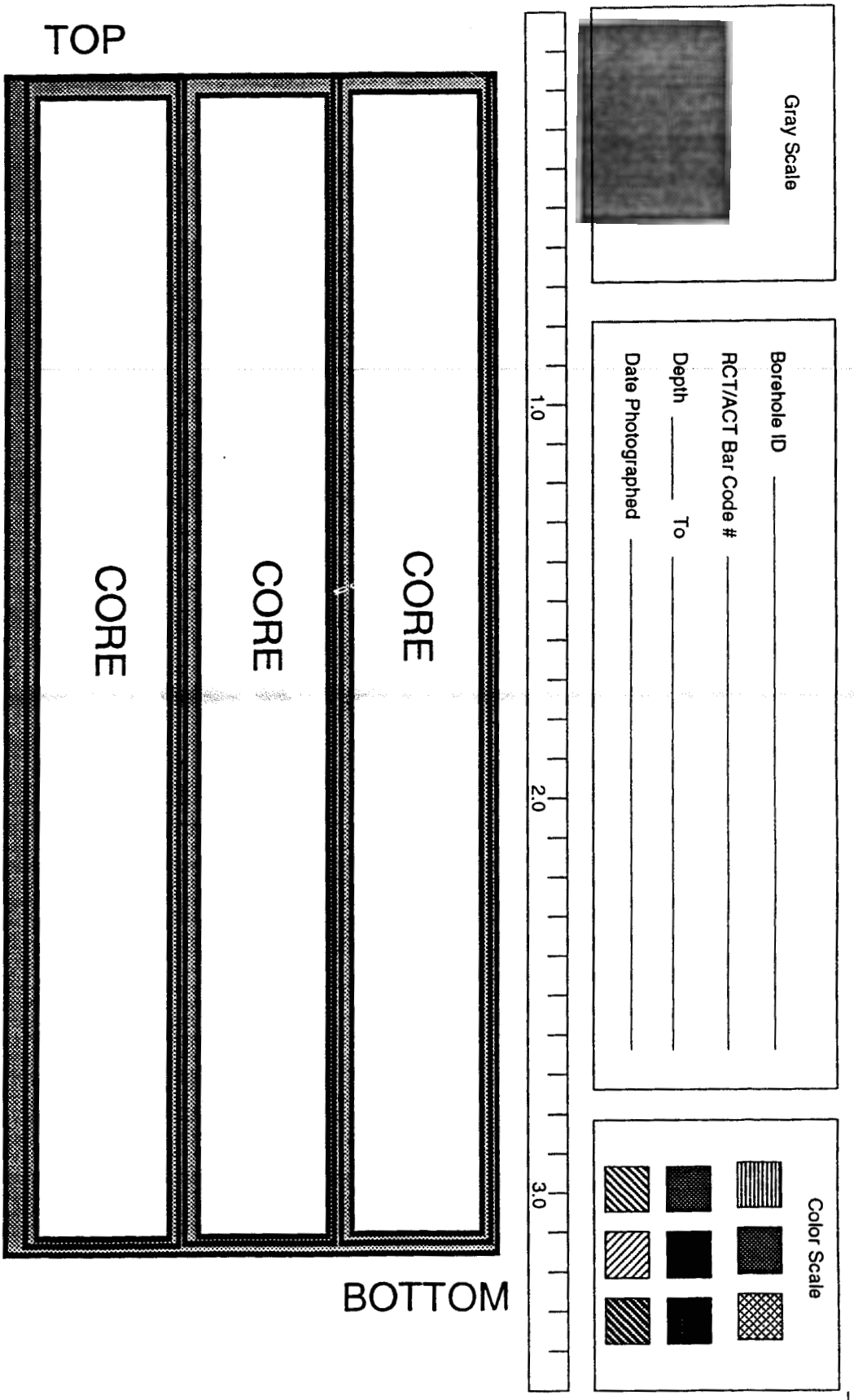

os Alamos National Laboratory Environmental Restoration Program
MARKS ON LAY-FLAT TUBING

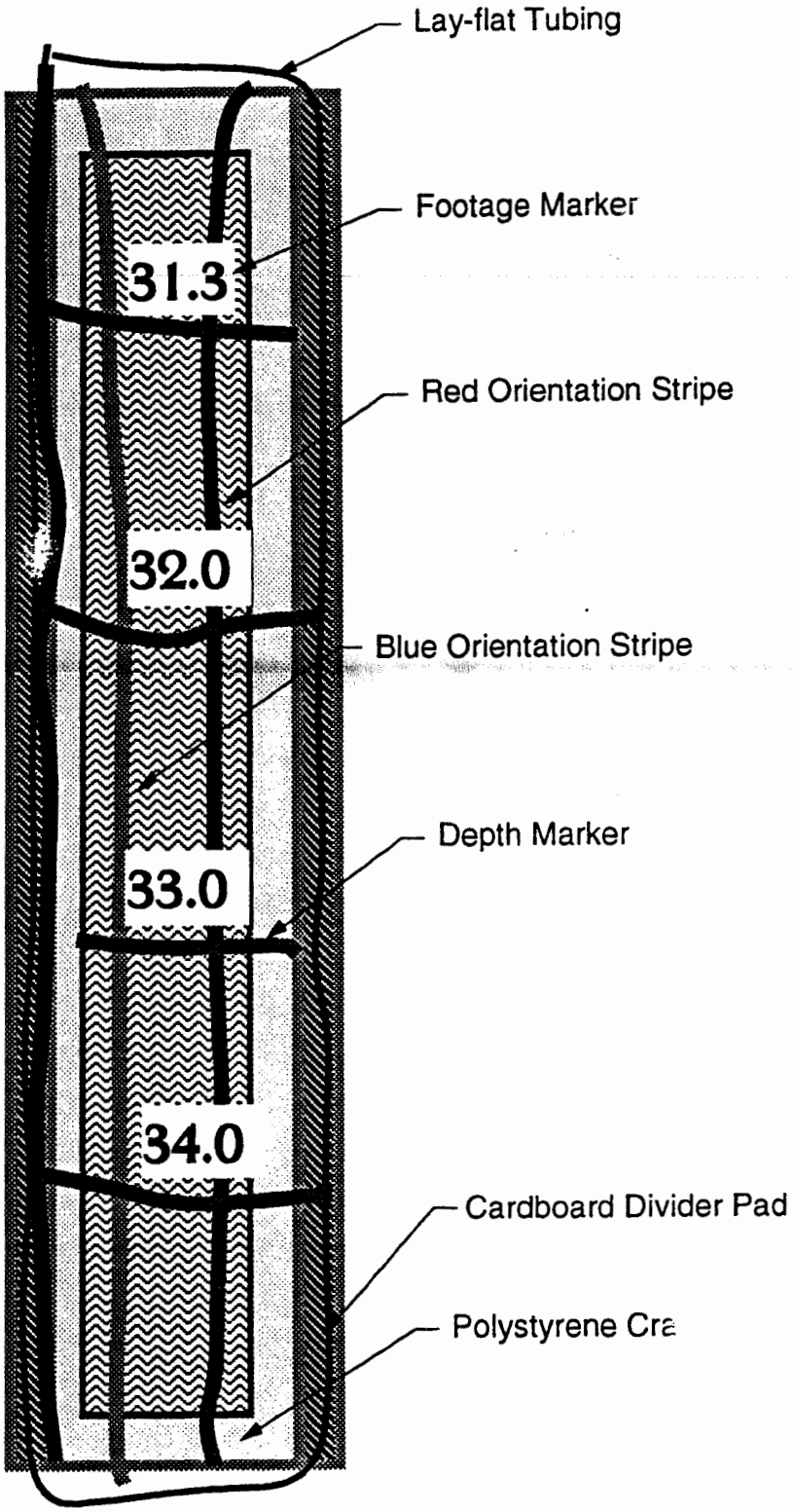

Los Alamos National Laboratory Environmental Restoration Program
CUTTINGS PROCESSING CHECKLIST

Special Instructions: _____

Box ID	Number	Of	Borehole	Top	Bottom
00900	1	56	Example	0.0	6.0

Sample ID	Top	Bottom	Status
001953	0.0	4.0	REC
001955	4.0	4.2	WC-Fld
001979	4.2	6.0	REC

_____

2. Samples Spit? _____

	Research	Archive
3. Duplicate Box constructed?	_____	_____
4. Box Labels applied?	_____	_____
5. 2 Sample Vials Labled?	_____	_____
6. Samples Placed in box?	_____	_____
7. Box lids closed?	_____	_____
8. Perm. Shelf locations assigned?	_____	_____

Geotechnician _____ Date_____ Curatorial Staff _____ Date_____

Los Alamos National Laboratory Environmental Restoration Program
BOREHOLE SAMPLE CONTAINER STORAGE LOCATION LOG

Wed, March 4, 1995 Nuumber of records listed: 4 MacCSITS v.3

Box ID	Of Borehole	Number	Top D	Bottom D	Type	Research Loc.	Archive Loc.	Date Stored	By
001595	122\ LA MESA	1	0.0	5.8	Core	_____	_____	_____	_____
001596	122\ LA MESA	2	5.8	12.5	Core	_____	_____	_____	_____
001597	122\ LA MESA	3	12.5	18.7	Core	_____	_____	_____	_____
001597	122\ LA MESA	4	18.7	25.0	Core	_____	_____	_____	_____

Los Alamos National Laboratory **Environmental Restoration Program** Standard Operating Procedure	No: LANL-ER-SOP-12.05 Rev: 0

EXAMINATION OF SAMPLES AT THE SAMPLE MANAGEMENT FACILITY

Prepared by	Dow Davidson (Print Name)	(Signature)	05-31-94 (Date)
Quality Review by	Thomas Farmer (Print Name)	(Signature)	6-1-94 (Date)
Technical Review by	Greg Bayhurst (Print Name)	(Signature)	5-27-94 (Date)
PM Approval	David McInroy (Print Name)	(Signature)	6/9/94 (Date)
QPPL Approval	Larry Souza (Print Name)	(Signature)	6/7/94 (Date)

Effective Date: 6/13/94

EXAMINATION OF SAMPLES AT THE SAMPLE MANAGEMENT FACILITY

Contents

1.0 PURPOSE 1

2.0 SCOPE 1
- 2.1 Applicability 1
- 2.2 Training 1

3.0 DEFINITIONS 1

4.0 BACKGROUND AND CAUTIONS 2

5.0 EQUIPMENT 2

6.0 PROCEDURES 2
- 6.1 Responsibilities for Examination of Borehole Samples at the SMF 2
- 6.2 Authorization for Examination 2
- 6.3 Disclosure of Radiation and Non-radiation Monitoring Results by the SMF 2
- 6.4 Examination of Whole Core Prior to Core Examination Meeting 3
- 6.5 Core Examination Meeting 3
- 6.6 Examination of Samples Subsequent to Processing 3
- 6.7 Reshelving of Samples 4

7.0 REFERENCES 4

8.0 RECORDS 4

9.0 ATTACHMENTS 4

EXAMINATION OF SAMPLES AT THE SAMPLE MANAGEMENT FACILITY

1.0 PURPOSE

The purpose of this procedure is to facilitate the tracking and use of geologic samples examined at the Environmental Restoration (ER) Program Sample Management Facility (SMF). The implementation of this procedure ensures that the traceability and identity of all samples examined at the SMF will be maintained.

2.0 SCOPE

The scope of this procedure includes: (1) instructions for coordinating requests for examination of samples by ER program personnel, (2) responsibilities of SMF staff during sample examination activities, and (3) the documentation related to the examination and the disposition of those documents.

2.1 Applicability

This procedure applies to SMF staff involved with the preparation, documentation, or examination of borehole samples collected for the ER Program and curated at the SMF.

2.2 Training

SMF staff will be trained to this procedure before conducting work, and will document they have read and understand this procedure.

3.0 DEFINITIONS

A. Core: A core is a cylindrical section of rock, or fragment thereof, that is taken as a sample of the interval penetrated by a core bit and that is brought to the surface for examination and/or analysis.

B. Cuttings: Cuttings are chips of rock produced during drilling that are removed from the borehole by circulation of drilling fluids (gas, foam, or liquid).

C. Examiner: An Examiner is an individual from the ER Program or outside interest who is authorized to visually examine samples at the SMF.

D. Requester: The Requester is an individual from the ER Program or outside interest who requests to visually examine an ER Program sample.

E. Sample: A sample is a physical entity, collected in the field, representative of the whole, that is the original source material for all subsequent analyses and testing activities.

F. Sample Management Facility: The SMF is the facility (Building TA-3-271) used for the documentation, examination, physical processing, storage, and control of selected samples, remnants, and records collected and distributed for the ER Program. The SMF consists of a physical facility and equipment designed to effectively process and preserve these samples, remnants, and records.

G. SMF Acceptance Criteria for Samples: The allowable exposure levels inside the SMF to radioactivity and non-radioactive contamination occurring from the acceptance, handling, processing, examination, and storage of samples. The SMF Acceptance Criteria are designed to ensure that potential exposures are limited to levels at which health and safety concerns are minimized or eliminated.

4.0 BACKGROUND AND CAUTIONS

N/A

5.0 EQUIPMENT

N/A

6.0 PROCEDURES

6.1 Responsibilities for Examination of Borehole Samples at the SMF

The Curator may authorize extensions of examination periods and determine the need to weigh a sample prior to examination. The Curation Staff shall assist examiners during examination activities and shall ensure that activities performed during examination conform to this procedure. The SMF Geotechnician(s) shall assist examiners during examination activities and shall complete documentation and prepare samples for examination. The SMF Geotechnician(s) shall also verify that the samples have not been visibly altered or subsampled during examination.

6.2 Authorization for Examination

Requesters who want to visually examine samples at the SMF shall submit a completed Sample Examination Request (Attachment A). This request must be approved by the Curator, and received by the SMF prior to the examination. The SMF Geotechnician will use this form to schedule examination of verified whole core and processed samples by the Requester. It is important that the Requester include the requested date, time and duration of the examination to enable the SMF to schedule the requested examination with the minimum of conflict.

6.3 Disclosure of Radiation and Non-radiation Monitoring Results by the SMF

Prior to the examination of any samples, the SMF Curator shall ensure that the Examiner is provided with a summary of monitoring results. These data will

indicate (1) whether the values are below natural background, and (2) whether the values are above natural background but below SMF Acceptance Criteria.

6.4 Examination of Whole Core Prior to Core Examination Meeting

If a requester needs to examine core prior to a Core Examination Meeting, the Requester will be allowed sufficient time to complete the necessary examination.

6.5 Core Examination Meeting

If more than one Requester expresses interest in examining and collecting specimens of core for a particular borehole, a Core Examination Meeting will be scheduled subsequent to confirmation and verification of field logging, but prior to core processing. Core Examination Meetings will occur as soon as possible after verification of core (LANL-ER-SOP-12.04). In the event that the proposed total depth of the borehole is not reached or is considerably delayed, the meeting will be scheduled to examine all available core. Requesters will be notified of the Core Examination Meeting by the SMF.

Data from the Sample Examination Request will be used to complete a Sample Examination Report (Attachment B.).

The SMF Geotechnician (s) will lay out sequential boxes of core from a single borehole in the Sample Examination/Logging Room on or before the scheduled meeting date. A core review packet containing copies of borehole information will be available for Examiners during the Core Examination Meeting.

Examiners will examine samples, record requested specimen intervals, and place temporary markers on core to indicate the Examiner and requested interval. If there are intervals that two or more Examiners request, an attempt will be made to resolve the conflict during the Core Examination Meeting. If the Examiners are unable to resolve the problem, assignment of specimen intervals will be determined by the Curator.

6.6 Examination of Samples Subsequent to Processing

If an Examiner requests to examine samples after processing, a Sample Examination Report will be generated as described above. Prior to or at the time the Examiner's scheduled examination, the SMF Geotechnician(s) or Curatorial Staff will remove the requested samples from storage using the Location module of MacCSITS. Sample weighing and recording of sample weights will be carried out at the discretion of the Curator as a quality control measure. The SMF staff may weigh the sample and container individually or together. The containers of samples will then be placed on examination tables. Core samples may be compared to photographs prior to examination as an additional quality control activity.

SMF staff will be available to work with the Examiners during specimen selection. After each specimen has been selected, measured, and marked, the SMF staff member assisting the Examiner will make a list of the specimen request information. When all specimens from a particular borehole have been selected, the list will be submitted to the Curator for review and evaluation of the specimen request.

Upon completion of examination of viewing by the Examiner, the SMF Geotechnician(s) may again compare the core samples viewed to the core photographs and reweigh the core boxes to ensure the sample have not been removed or disrupted. If there are no discrepancies, the SMF Geotechnician(s) will then complete the Sample Examination Report and initial this action. The SMF Geotechnician(s) will sign the this form in the lower right-hand corner and submit to the Curatorial Staff for verification.

6.7 Reshelving of Samples

The SMF Geotechnician(s) will reseal all containers with filament tape, remove them from the Sample Examination/Logging Room, and replace them in an appropriate storage location using the Location module of MacCSITS.

7.0 REFERENCES

LANL-ER-QPP, Quality Program Plan for Environmental Restoration Activities
LANL-ER-SOP-12.01, Field Logging, Handling, and Documentation of Borehole Material
LANL-ER-SOP-12.02, Transportation, Receipt, and Admittance of Borehole Samples for the SMF

"Branch Technical Procedure: Examination of Samples By Participants At The Sample Management Facility," 1989, Yucca Mountain Project Office, Las Vegas, NV

8.0 RECORDS

Sample Examination Request
Sample Examination Report

The Sample Management Facility is ultimately responsible for transfer of these records to the ER Records Processing Facility in accordance with the procedure for the Los Alamos National Laboraory ER Records Management (LANL-ER-AP-02.1)

9.0 ATTACHMENTS

Attachment A - Sample Examination Request
Attachment B - Sample Examination Report

LOS ALAMOS NATIONAL LABORATORY ENVIRONMENTAL RESTORATION PROGRAM

SAMPLE MANAGEMENT FACILITY

SAMPLE EXAMINATION REQUEST

Requester (Please Print)

First Name_____ **Last Name** _____

Organization _____**Date of Examination**_____**Estimated Duration**_____

Mailing Address

_____

_____

_____

City_____ **St.**____ **Zip** _____

Telephone Numbers

Primary Phone No._____

Alternate Phone No._____

Fax No._____

The Environmental Restoration Program geologic samples that have been provided for your examination at the Sample Management Facility are controlled by the Quality Program Plan for Environmental Restoration Activities. The samples are made available to you are for VISUAL EXAMINATION ONLY, NO DESTRUCTIVE ACTIONS OR REMOVAL of SPECIMENS are to be performed. Requesters needing to destroy or consume material for analytical purposes must collaborate with the SMF Staff who will ensure that these actions are properly performed and documented.

I have read the above statement and will comply with sample examination restrictions.

Requester Signature_____

Acquisition Site - TA/OU - Borehole	Depth interval or Reference	Sample Type

SMF USE ONLY: Curatorial Staff _____Date _____

Los Alamos National Laboratory Environmental Restoration Program
SAMPLE EXAMINATION REPORT

MacCSITS v.3

Boxes Viewed at the Sample Management Facility

Date Viewed: 03/04/95

Examination ID: 0201

Primary Examiner: Andrew J. Fault

Organization: LANL- EES-99

Number of Boxes Viewed: 12

BoxID	OfBhole		Box	TopD	BotD	Type	Exam Room	Weight In	Date	Weight Out	Date	Penetrating Radation	β/γ Particulates	α Particulates	VOCs	Metals	Radon	Tritium
000234	028	DPC17	001	0.0	4.0	Core	Exam					< NB	< NB	< NB	< NB	< NB	NA	NA
000235	028	DPC17	002	4.0	12.5	Core	Exam					< NB	< NB	< NB	< NB	< NB	NA	NA
000236	028	DPC17	003	12.5	20.0	Core	Exam					< NB	< NB	< NB	< NB	< NB	NA	NA
000238	028	DPC17	004	20.0	25.5	Core	Exam					< NB	< NB	< NB	< NB	< NB	NA	NA
000297	028	DPC17	005	25.5	32.0	Core	Exam					< NB	< NB	< NB	< NB	< NB	NA	NA
000298	028	DPC17	006	32.0	42.5	Core	Exam					< NB	< NB	< NB	< NB	< NB	NA	NA
000299	028	DPC17	007	42.5	50.2	Core	Exam					< NB	< NB	< NB	< NB	< NB	NA	NA
000300	028	DPC17	008	50.2	65.0	Core	Exam					> NB,< AC	< NB	< NB	< NB	< NB	NA	NA
000301	028	DPC17	009	65.0	70.0	Core	Exam					< NB	< NB	< NB	< NB	< NB	NA	NA
000302	028	DPC17	010	70.0	77.5	Core	Exam					< NB	< NB	< NB	< NB	< NB	NA	NA
000303	028	DPC17	011	77.5	82.0	Core	Exam					< NB	< NB	< NB	< NB	< NB	NA	NA
000305	028	DPC17	012	82.0	86.7	Core	Exam					< NB	< NB	< NB	< NB	< NB	NA	NA

NB = Natural Background, AC = SMF Acceptance Criteria

Geotechnician _____ Date _____

NOTE: Complete only Applicable Lines

Curatorial Staff _____ Date _____