Los Alamos
NATIONAL LABORATORY

memorandum

To/MS: LA-10300-M Holders
From/MS: Margaret A. Gautier, Editor mag
Phone/FAX: (505) 667-6235/(505) 665-5982

Symbol: CST-3/95-058
Date: April 7, 1995

RECEIVED [redacted] 19 1995

SUBJECT: MARCH 1995 UPDATES AND ADDITIONS

The Analytical Services group (CST-3) of Los Alamos National Laboratory is continuing the publication of its analytical procedures. Besides this cover memo, enclosed in the packet you will find the following items:

- update instructions,
- Document Acknowledgment Sheet, and
- shrink-wrapped updates and additions.

Please incorporate the updates and additions into your manual by following the update instructions. Then, on the Document Acknowledgement Sheet, fill in the date of receipt, any address changes or corrections to be made, and a telephone number where you can be reached during working hours. Return the sheet to CST-3. This will help us keep our mailing list current and ensure that you will receive all future updates.

If you have any questions regarding the procedures or update instructions, or if I may be of any further assistance, please feel free to contact me.

PG/ja
(wp51/peg/3-95ext.upd)

enclosures

12602

UPDATE INSTRUCTIONS

LA-10300-M, REVISION 7 (March 1995)

Volume I:

(1) Replace the existing white title page (rev. November 1993) with the new one (rev. March 1995).

General Information

(2) Replace the table of contents (pages GI-1 through GI-21) with the revised version.

Radiobioassay Chemistry

(3) Replace the table of contents (pages R-1 and R-2) with the revised version.

(4) Replace procedure R230 with the revised version.

Volume II:

(5) Replace the existing white title page (rev. November 1993) with the new one (rev. March 1995).

Environmental Chemistry

(6) Replace the table of contents (pages E-1 through E-5) with the revised version.

Environmental Inorganic Chemistry

(7) Insert procedure EI732 after EI730.

Environmental Organic Chemistry

(8) Insert procedure EO700 after EO530.

Environmental Radiochemistry

(9) Replace procedure ER190 and ER210 with the revised versions.

(10) Insert procedure ER320 after ER300.

Volume III:

(11) Replace the existing white title page (rev. November 1993) with the new one (rev. March 1995).

Waste Water Chemistry

(12) Replace the table of contents (pages WW-1 through WW-5) with the revised version.

Waste Water Inorganic Chemistry

(13) Replace procedures WI230, WI340, WI460, and WI650 with the revised versions.

(14) Replace **page one and two only** of WI700. This procedure has been retired.

(OVER)

Volume IV:

(15) Replace the existing white title page (rev. November 1993) with the new one (rev. March 1995).

Quality Control

(16) Replace the table of contents, preface, acknowledgements, and abstract (pages QC-1 through QC-9) with the revised versions.

Quality Control Inorganic Chemistry

(17) Insert procedure QCI105 after QCI100.

(18) Replace **page one and two only** of procedure QCI110. This procedure has been retired.

(19) Replace procedure QCI120 with the revised version.

(20) Insert procedure QCI135 after QCI120.

(21) Replace procedure QCI140 with the revised version.

(22) Replace **page one and two only** of procedure QCI150. This procedure has been retired.

(23) Replace procedures QCI170, QCI180, QCI190, QCI200, and QCI210 with the revised versions.

(24) Insert procedure QCI215 after QCI210.

(25) Replace procedure QCI220 with the revised version.

Quality Control Organic Chemistry

(26) Replace procedures QCO100, QCO110, QCO120, QCO130, QCO140, QCO150, QCO170, QCO180, QCO190, QCO200, QCO210, QCO220, QCO250, and QCO260 with revised versions.

Quality Control Radiochemistry

(27) Replace procedures QCR100, QCR110, QCR120, QCR130, QCR140, and QCR150 with revised versions.

(28) Replace procedures QCR153 and QCR155 with retired versions. Because changes were made before these procedures were retired, the entire procedures are included instead of only the first two pages, as is usual.

(29) Replace procedures QCR160, QCR170, QCR180, QCR190, QCR200, QCR210, QCR220, QCR230, QCR240, QCR250, QCR260, QCR270, and QCR280 with revised versions.

Quality Control Miscellaneous

(30) Replace procedure QCM200 with revised version.

Quality Control Intercomparison Studies

(31) Replace procedure QCS100 with revised version.

(32) Insert procedure QCS110 after QCS100.

(33) Replace procedures QCS130, QCS150, QCS180, and QCS200 with revised versions.

(34) Replace **page one and two only** of procedures QCS210. This procedure has been retired.

(35) Replace procedures QCS220 and QCS230 with revised versions.

Document Acknowledgement Sheet

Barbara Hoditschek
Hazardous and Radioactive
Materials Bureau
NMED
525 Camino de los Marquez
Santa Fe, NM 87502

Received March 1995 updates

on _____

Business Phone (___) _____

☐ **Correct or change my name and/or address.**

To (correct name and/or address): _____

☐ **Delete my name from the distribution (I will return the manual to Analytical Services, CST-3).**

Name and address: _____

☐ **Transfer my manual.**

To (name and address of new holder): _____

Comments _____

FOLD ... STAPLE OR TAPE ...

AND MAIL

Staple here

Fold here to return

NO POSTAGE NECESSARY IF MAILED IN THE UNITED STATES

BUSINESS REPLY MAIL

FIRST CLASS PERMIT NO. 88 LOS ALAMOS, NM

POSTAGE WILL BE PAID BY ADDRESSEE

Los Alamos National Laboratory
Analytical Services, CST-3
Quality Assurance and Data
Management Section
P.O. Box 1663, MS K484
Los Alamos, NM 87544-9987

LA-10300-M, Vol. I
Manual

Health and Environmental Chemistry: Analytical Techniques, Data Management, and Quality Assurance

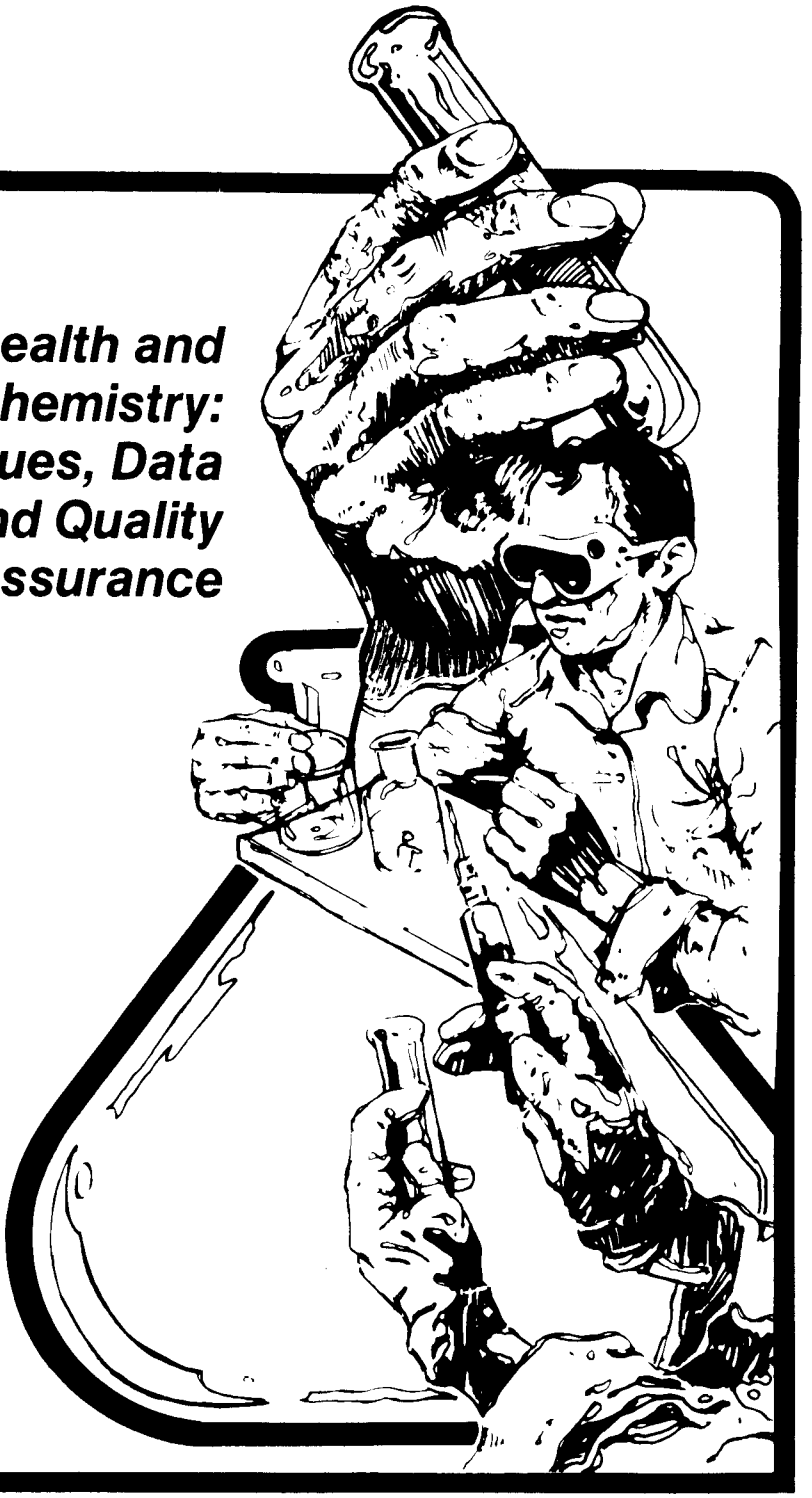

Los Alamos National Laboratory is operated by the University of California for the United States Department of Energy under contract W-7405-ENG-36.

Los Alamos
Los Alamos National Laboratory
Los Alamos, New Mexico 87545

An Affirmative Action/Equal Opportunity Employer

This report supersedes LA-1858 (2nd edition), issued September 1958, and LA-9763-M, issued July 1983.

Edited by IS-11 Manuals Section
Photocomposition by E. Katherine Valdez
Assisted by Joyce A. Martinez
Cover art by Rod Furan, Group IS-12

DISCLAIMER

This report was prepared as an account of work sponsored by an agency of the United States Government. Neither the United States Government nor any agency thereof, nor any of their employees, makes any warranty, express or implied, or assumes any legal liability or responsibility for the accuracy, completeness, or usefulness of any information, apparatus, product, or process disclosed, or represents that its use would not infringe privately owned rights. Reference herein to any specific commercial product, process, or service by trade name, trademark, manufacturer, or otherwise, does not necessarily constitute or imply its endorsement, recommendation, or favoring by the United States Government or any agency thereof. The views and opinions of authors expressed herein do not necessarily state or reflect those of the United States Government or any agency thereof.

LA-10300-M Vol. I
Manual

UC-907
Issued: May 1986
Revised: March 1995

Health and Environmental Chemistry: Analytical Techniques, Data Management, and Quality Assurance

Edited by
Margaret A. Gautier

Los Alamos
NATIONAL LABORATORY
Los Alamos, New Mexico 87545

CONTENTS
(Vol. I)

GENERAL INFORMATION

RADIOBIOASSAY CHEMISTRY

RADIOTISSUE CHEMISTRY

INDUSTRIAL HYGIENE CHEMISTRY

ABOUT THIS MANUAL

This manual, LA-10300-M, documents the analytical methodology used by the Los Alamos National Laboratory Environmental Chemistry Group. All the categories of procedures listed in the Contents will eventually be included in the manual. When completed, LA-10300-M will consist of Volumes I through IV. Because of the vastness of this effort, the manual is being issued one section at a time. When a new section is issued, the previously issued sections will be revised as needed.

Two previous documents, LA-1858, *Analytical Procedures of the Industrial Hygiene Group*, and LA-9763-M, *Manual of Analytical Methods for Radiobioassay*, are superseded by this manual.

A document control sheet is provided in the front of the manual. Please use it to notify us of any changes of address.

Environmental Chemistry, EM-9
Los Alamos National Laboratory

PREFACE

The Health and Safety and Environmental Management Divisions of Los Alamos National Laboratory are engaged in work to identify hazards encountered by employees and to identify the impact of those hazards on the environment adjacent to the Laboratory. Decisions that must be made regarding risk to the worker and to the worker's environment depend upon the availability of reliable analytical data.

An important tool for satisfactory decision making is the analytical method. This manual is a collection of analytical methods used to measure the concentration of analytes in a wide variety of matrices. These methods are intended to promote precision, accuracy, and specificity while preserving practicability.

The analytical techniques in this manual were developed by the staff of the Environmental Chemistry Group or were adapted from procedures found in the literature. Analytical development involves fitting known principles and reactions to particular cases; no claim to strict originality is made for the procedures.

To prove their validity, the procedures have been tested by analytical chemists and technicians on many samples over an extended period of time. All procedures are presented clearly and concisely, and it is hoped that they will be usable by any competent analyst. There will be situations where users will need to modify these methods to take advantage of special laboratory capabilities, to accommodate interfering compounds from the workplace and the environment, or to analyze several contaminants in a single sample.

The Environmental Chemistry Group invites comments and questions from users of this manual. Questions will be referred to the appropriate group member, who will be pleased to provide information or consultation.

Sections on quality assurance, data management, and nuclear counting techniques will be added. It is recognized that the analytical chemist will continually be requested to perform more complicated measurements requiring increased selectivity and reduced analysis turnaround time. Additional methods and revisions will be issued periodically.

Health and Environmental Chemistry:
Analytical Techniques, Data Management,
and Quality Assurance

Edited by

Margaret A. Gautier

ABSTRACT

This manual has been prepared by the Environmental Chemistry Group of the Los Alamos National Laboratory. It is part of the overall quality control effort to document the analytical methodology used to support the Laboratory's health, safety, and environment programs. The present manual is the first compilation of these methods and contains step-by-step techniques for use with bioassay, tissue, environmental, industrial hygiene, and waste water samples. These organic, inorganic, and radiochemical analytical techniques, for use with a wide variety of matrices, were developed by the Environmental Chemistry staff or were adapted from procedures found in the literature. These techniques have been tested by senior chemists and technicians to prove their reliability and validity to measure concentrations of analytes with the precision, accuracy, and specificity required by various Laboratory programs. Precision and accuracy statements are provided where such data are available. Each procedure is presented in a simple and concise manner and includes interferences, apparatus, and reagent preparation, calibration methods, and data reduction formulas. The procedures utilize equipment and skills available in modern analytical chemistry laboratories. The analytical techniques are presented to provide guidance to laboratories performing analytical services for health, safety, and environment programs.

General Information

CONTENTS

Preface vii

Abstract ix

Introduction GI-21

Document Control and Document Change GI-25

The page numbering convention used in this manual consists of the specific procedure number (shown at left in list below) followed by the page number for that procedure. Thus, R110-2 is page two of procedure R110. The right column in the list below gives each procedure's status or effective date.

Radiobioassay Chemistry Analytical Techniques

Radiobioassay Analytical Procedures

R100 Americium in Urine—Alkaline Earth Phosphate 02/93

R110 Americium and Plutonium in Fecal Samples—
A Screening Procedure 02/93

R120 Cesium-137 in Urine . . . . . Retired

R130 Gross Beta Activity . . . . . Retired

R150 Phosphorus-32 in Urine . . . . . Retired

R160 Polonium-210 in Urine . . . . . Retired

R170 Plutonium in Urine—Alkaline Earth Phosphate Procedure 09/91

R190 Plutonium in Urine—Rapid Method . . . . . Retired

R210 Thorium in Urine—Colorimetric . . . . . Retired

R230 Tritium in Urine—Direct 09/92

R240 Tritium in Urine—Distillation ..... Retired

R250 Uranium—Delayed Neutron Counting 07/91

R260 Uranium in Urine—Anion Exchange and Radiometric ..... Retired

R261 Uranium (Isotopic) in Urine—Alkaline Earth Phosphate 09/92

R270 Uranium in Urine—Anion Exchange and Colorimetric ..... Retired

R280 Uranium-238 Fluorometric ..... Retired

R290 Uranium in Urine—ICPMS 11/90

Radiotissue Chemistry Analytical Techniques

Radiotissue Analytical Procedures

RT100 Tissue Ashing, Sample Dissolution, Sample Aliquot Selection, and Tracer Addition for Anion Exchange Isolation of Radionuclides 05/92

RT200 Anion Exchange Isolation of Plutonium from Prepared Tissue Solutions 05/92

RT300 Anion Exchange Isolation of Americium from Prepared Tissue Solutions 02/93

Anion Exchange Isolation of Thorium from Prepared Tissue Solutions ..... In Progress

RT400 Anion Exchange Isolation of Uranium from Prepared Tissue Solutions 02/93

RT500 Electroplating Americium, Plutonium, Uranium, and Thorium 10/92

RT600 Alpha Spectrometry Measurement for Radionuclides of Americium 02/93

RT700 Alpha Spectrometry Measurement for Radionuclides of Plutonium 02/93

RT750 Alpha Spectrometry Measurement for Radionuclides of Thorium 04/93

RT800 Alpha Spectrometry Measurement for Radionuclides of Uranium 02/93

RT900 Measurement of Actinium in Tissue Samples—Gamma Spectroscopy 11/92

Appendix

ALPHA1 Computer Code 09/87

Industrial Hygiene Chemistry Analytical Techniques

Industrial Hygiene Analytical Procedures

IH100 Aliphatic Amines in Air . . . . . Retired

IH110 Anions by Ion Chromatography . . . . . Retired

IH120 Aromatic Amines in Air . . . . . Retired

IH130 Aromatic Amines—A Chemical Spot Test . . . . . Retired

IH135 Arsenic and Gallium on Air Filters—IENA . . . . . Retired

IH140 Asbestos Fibers in Air . . . . . Retired

IH150 Beryllium on Air Filters 09/87

IH155 Breathing Air 04/93

IH160 Cadmium in Urine—Flame AA . . . . . Retired

IH161 Cadmium in Urine—Flameless AA . . . . . Retired

IH170 Cholinesterase in Serum . . . . . Retired

IH180 N,N-Dimethylaminoazobenzene—A Chemical Spot Test . . . . . Retired

IH190 Fluoride in Urine . . . . . Retired

IH200 Formaldehyde in Air—Alumina Tube Collection . . . . . Retired

IH210 Formaldehyde in Air—Impinger Collection . . . . . Retired

IH214	Halogens and Sulfur in Liquids—NAA	Retired
IH220	Metals on Air Filters—NIOSH PAT Samples	03/93
IH230	Mercury in Urine	Retired
IH240	Metals—General Procedure	Retired
IH250	Aromatic Nitro-Compounds—A Chemical Spot Test	Retired
IH260	Organic Solvents in Air—General Procedure	05/86
IH270	Organic Solvents—NIOSH PAT Samples	05/86
IH273	Perchlorate in Waters—Colorimetric	09/92
IH274	Petroleum Hydrocarbons, Total Recoverable in Soil	01/92
IH275	Petroleum Hydrocarbons, Total Recoverable in Water	01/92
IH280	Phenol in Urine—Gas Chromatography	Retired
IH290	Phenol in Urine—HPLC	Retired
IH300	Phenol in Water—HPLC	Retired
IH310	Polychlorinated Biphenyls (PCBs) in Air	Retired
IH320	Polychlorinated Biphenyls (PCBs) in Oil	Retired
IH321	Polychlorinated Biphenyls (PCBs)—Screening by NAA	Retired
IH330	Polynuclear Aromatic Hydrocarbons in Air—HPLC	05/86
IH340	Polynuclear Aromatic Hydrocarbons in Air—GC	04/93
IH345	Thallium in Urine—ICPMS	10/90
	Trace Metals in Air Filters	In Progress
IH350	Trichloroacetic Acid in Urine	Retired

Instrument Procedures

IH800 Gas Chromatography and Mass Spectrometry—General Procedure . . . . . Retired

IH810 Infrared Spectroscopy—General Procedure . . . . . Retired

Environmental Chemistry Analytical Techniques

Environmental Analytical Procedures - Inorganic

Atomic Absorption

EI100 Arsenic in Water and Soil Extracts—Graphite Furnace AA 2/92

EI105 Barium in Water and Soil Extracts—Flame AA 09/92

EI110 Beryllium in Biological and Geological Matrices . . . . . In Progress

EI115 Cadmium, Copper, and Lead in Biological and Geological Matrices . . . . . In Progress

EI120 Cadmium in Water and Soil Extracts—Graphite Furnace AA 02/92

EI125 Calcium in Water and Soil Extracts—Flame AA 09/92

EI130 Chromium in Oil, Water, and Soil Extracts—Flame AA 09/92

EI135 Chromium in Water and Soil Extracts—Graphite Furnace AA 02/92

EI140 Copper in Water and Soil Extracts—Flame AA 09/92

EI145 Iron in Water and Soil Extracts—Flame AA 09/92

EI150 Lead in Water and Soil Extracts—Graphite Furnace AA 02/92

EI155 Lithium in Biological and Geological Matrices . . . . . In Progress

EI160 Magnesium in Water and Soil Extracts—Flame AA 09/92

EI165	Mercury in Water—Cold Vapor AA	09/92
EI170	Nickel in Water and Soil Extracts—Flame AA	09/92
EI175	Potassium in Water and Soil Extracts—Flame AA	09/92
EI180	Runoff Samples for Mercury, Lead, and Beryllium	In Progress
EI185	Selenium in Water and Soil Extracts—Graphite Furnace AA	02/92
EI190	Silver in Water and Soil Extracts—Flame AA	09/92
EI195	Sodium in Water and Soil Extracts—Flame AA	09/92
EI200	Thallium on Filters—Graphite Furnace AA	02/92
EI205	Thallium in Water and Soil Extracts—Graphite Furnace AA	02/92
EI210	Zinc in Water and Soil Extracts—Flame AA	09/92

Inductively Coupled Plasma Atomic Emission and Mass Spectrometry

EI300	Barium in Soils—Acid Digestion and ICPAES	Retired
EI310	Elemental Scans of Water—ICPMS	In Progress
EI320	Extraction Procedure Toxicity (EPTOX) Metals—Acid Digestion and ICPAES	In Progress
EI330	Extraction Procedure Toxicity (EP Tox) Metals—ICPMS	In Progress
EI340	Metals in Water—ICPMS	In Progress
EI350	Trace Elements in Filters, Soil, Sludge, Urine, Leachates, Water, and Waste—ICPMS (EPA Method 200.8 and 6020)	In Progress
EI360	Trace Elements in Waters and Wastes—ICPMS (EPA Method 200.8)	In Progress
EI370	Trace Metals in Soils—Acid Digestion and ICPAES	In Progress

Ion Chromatography and Spectrophotometry

EI400	Anions in Water and Waste Water—Ion Chromatography	06/92
EI410	Boron in Natural and Geothermal Waters—Flow Injection	In Progress
EI420	Fluoride in Environmental Matrices	In Progress
EI430	Fluoride in Water—ISE	In Progress
EI440	Nitrate in Water—Cadmium Reduction UV-VIS Spectrophotometry	In Progress
EI450	Titanium—Colorimetric using Diantipyrylmethane	In Progress
EI460	Total Phosphate in Water—Ascorbic Acid	In Progress
EI470	Silicon—Heteropoly Blue Colorimetric	In Progress

Potentiometry

EI500	Fluorine in Water—Ion Selective Electrode	In Progress
EI510	Nitrate in Water—Ion Selective Electrode	In Progress
EI520	pH of Soil	10/91
EI530	pH of Water	In Progress
EI540	Specific Conductivity in Water	In Progress

Neutron Activation

EI600	Arsenic in Biologicals—RENA	In Progress
EI610	Arsenic, Tungsten and Molybdenum in Environmental Materials—IENA	In Progress
EI620	Arsenic, Antimony, and Tungsten in Natural Waters—RTNA	In Progress
EI630	Arsenic, Antimony, Tungsten and Molybdenum in Silicates—RENA	Retired

EI640	Bromine and Iodine in Geological Matrices—IENA	In Progress
EI650	Copper and Noble Metals in Geological Matrices—RTNA	In Progress
EI660	Selenium in Environmental Matrices—RTNA	In Progress

Miscellaneous

EI700	Carbonate Carbon in Geologicals by Gravimetric Analysis	In Progress
EI710	Dissolved Analytes—Sample Preparation	In Progress
EI720	Dissolved Metals in Water—Sample Preparation	In Progress
EI730	Mercury in Environmental Materials—Cold Vapor Gold Film Analyzer	10/90
EI735	Sample Preparation for Spectrochemical Analyses of Total Recoverable Elements (EPA Method 200.2)	12/90
EI740	Sulfur in Environmental Matrices—Combustion with Infrared Detection	In Progress
EI750	Total Dissolved Solids—Gravimetry	In Progress
EI760	Total Hardness—Titrimetry	In Progress
EI770	Total Organic Carbon	In Progress
EI780	Total Organic Halides (TOX)	In Progress
EI790	Water (Bound and Unbound) in Geological Matrices—High Temperature Coulometry	Retired

Environmental Analytical Procedures - Organic

Herbicides

EO100	Herbicides in Soil: Solvent Extraction/Derivatization—GC/ECD	In Progress

EO110	Herbicides in Water: Solvent Extraction/Derivatization—GC/ECD	In Progress

High Explosive Residue

EO200	High Explosive Residue on Soil: Solvent Extraction—HPLC	In Progress
EO210	High Explosive Residue on Soil: Solvent Extraction—HPLC/MS	In Progress
EO220	High Explosive Residue in Water: Solvent Extraction—HPLC	In Progress
EO230	High Explosive Residue in Water: Solvent Extraction—HPLC/MS	In Progress

Pesticides

EO300	Pesticides in Soil: Solvent Extraction—GC/ECD	In Progress
EO310	Pesticides in Water: Solvent Extraction—GC/ECD	In Progress
EO320	Pesticides in Water: Open Tubular Solid Phase Extraction—GC/ECD	In Progress

Polychlorinated Biphenyls (PCBs)

EO400	Polychlorinated Biphenyls (PCBs) in Oil: Solvent Extraction—GC/ECD	03/93
EO410	Polychlorinated Biphenyls (PCBs) in Soil: Solvent Extraction—GC/ECD	03/93
EO420	Polychlorinated Biphenyls (PCBs) in Swipes: Solvent Extraction—GC/ECD	03/93
EO430	Polychlorinated Biphenyls (PCBs) in Water: Solvent Extraction—GC/ECD	03/93
EO440	Polychlorinated Biphenyls in Water: Open Tubular Solid Phase Extraction—GC/ECD	In Progress
EO450	Polychlorinated Biphenyls in Oil: Solvent Dilution/Sulfuric Acid Clean-up—GC/ECD	In Progress

EO460 Polychlorinated Biphenyls in Air: Solvent Extraction of Air Sampling Tubes—GC/ECD ..... In Progress

Semivolatile Organic Compounds

EO500 Semivolatile Organics in Solid Matrices: Solvent Extraction—GC/MS 05/93

EO510 Semivolatile Organic Compounds on Soil: Solvent Extraction—GC with GCMS Confirmation ..... In Progress

EO520 Semivolatile Organic Compounds on Soil and Water: Gel Permeation Clean-up—GPC ..... In Progress

EO530 Semivolatile Organics in Water Aqueous Matrices: Solvent Extraction—GC/MS 05/93

EO540 Semivolatile Organic Compounds in Water: Solvent Extraction—GC with GCMS Confirmation ..... In Progress

Volatile Organic Compounds

EO700 Volatile Organic Compounds: Thermal Desorption of Air Sampling Tubes—GC/MS ..... In Progress

EO710 Volatile Organic Compounds: Solvent Extraction of Charcoal Tubes—GC/MS ..... In Progress

EO720 Volatile Organic Compounds in Soil and Sediment: Capillary Column Technique—GC/MS (EPA SW846 Method 8260) 05/93

EO730 Volatile Organic Compounds in Water: Precision Dynatech Autosampler Capillary Column Technique—GC/MS (EPA SW846 Method 8260) 05/93

Environmental Analytical Procedures — Radiochemical

ER100 Gross Alpha and Beta Activity in Environmental Matrices—Gas-Flow Proportional Counting 04/92

ER110 Americium-241 in Environmental Matrices (Greater than 2-Gram Samples)—Alpha Spectrometry 02/93

ER120	Americium-241 in Environmental Matrices (Less than 2-Gram Samples)—Alpha Spectrometry	08/92
ER130	Gamma-Ray-Emitting Nuclides in Environmental Matrices—Instrumental Method	04/93
ER140	Qualitative Gamma-Ray Scan of Environmental Matrices	04/93
ER150	Gross Gamma in Environmental Matrices	03/91
ER160	Plutonium in Environmental Matrices—Alpha Spectrometry	04/93
ER165	Plutonium in Sediment (Kilogram Samples)	In Progress
ER170	Radium-226 in Geologicals—Gamma-Ray Spectrometry	04/91
ER180	Radium-226 in Water—Radon Emanation	04/93
ER190	Strontium-90 in Environmental Matrices	08/92
ER200	Thorium-230 in Geologicals—Alpha Spectrometry	05/91
ER210	Tritium in Environmental Matrices—Distillation Procedure	06/92
ER230	Uranium-235/Uranium-238 Ratio in Geologicals and Natural Waters—RTNA	Retired
ER240	Uranium in Air Filters—DNA	05/91
ER250	Uranium in Biological Matrices—DNA	06/91
ER260	Uranium in Geologicals—DNA	05/91
ER270	Uranium in Water—DNA	05/91
ER290	Total Uranium and $^{235}U/^{238}U$ Ratio in Water—ICPMS	02/91
ER300	Depleted Uranium in Soils—IENA	Retired

Mobile Laboratory Analytical Techniques

Mobile Laboratory Analytical Procedures—Organic

MLO274 Petroleum Hydrocarbons, Total Recoverable in Soil—
Mobile Laboratory Method 04/93

MLO410 Polychlorinated Biphenyls (PCBs) in Soil—
Mobile Laboratory Method 03/93

MLO500 Semivolatile Organics in Solid Matrices: Solvent
Extraction-GC/MS—Mobile Laboratory Method 04/93

MLO510 Extraction of Semivolatile Organic Analytes in Solid
Matrices for Analysis by GC/MS—Mobile Laboratory Method 04/93

MLO720 Volatile Organic Compounds in Soil Sediment—
Mobile Laboratory Method 04/93

Mobile Laboratory Analytical Procedures—Radiochemical

MLR100 Gross Alpha/Beta Screening of Silicates—
Mobile Laboratory Method 02/93

MLR200 Gross Gamma Screening of Silicates—
Mobile Laboratory Method 02/93

MLR300 Gross Tritium Analysis of Silicates—
Mobile Laboratory Method 02/93

MLR400 Gross Moisture Analysis of Silicates—
Mobile Laboratory Method 02/93

Waste Water Chemistry Analytical Techniques

Waste Water Analytical Procedures - Inorganic

Atomic Absorption

WI100 Atomic Absorption Methods—Method 7000 (SW 846) ..... Retired

WI110 Mercury in Solid or Semisolid Waste—

	CVAA (EPA Method 7471)	11/90
WI120	Mercury in Leachates, Water, and Waste Water—CVAA	11/90

Colorimetry

WI200	Ammonia in Water and Waste Water—Flow Injection	Retired
WI210	Ammonia Nitrogen in Water and Waste Water—Auto Analyzer	Retired
WI220	Boron in Natural and Geothermal Waters—Flow Injection	Retired
WI230	Chemical Oxygen Demand in Water and Waste Water—Auto Analyzer or Manual	09/91
WI240	Chloride in Water and Waste Water—Flow Injection	Retired
WI250	Chromium VI in Water and Waste Water—Spectrophotometric	Retired
WI260	Chromium VI in Water and Waste Water—Flow Injection	08/91
WI270	Cyanide in Waste Water—Auto Analyzer	Retired
WI280	Nitrate in Water and Waste Water—Flow Injection	Retired
WI290	Nitrate Nitrogen in Water and Waste Water—Auto Analyzer	Retired
WI300	Nitrite Nitrogen in Water and Waste Water—Auto Analyzer	Retired
WI310	Nitrite Nitrogen in Water and Waste Water—Flow Injection	Retired
WI320	Phosphorus in Water and Waste Water—Auto Analyzer	01/92
WI330	Silica in Water and Waste Water—Spectrophotometric	Retired
WI340	Silica in Water and Waste Water—Flow Injection	08/91
WI350	Sulfate in Water and Waste Water—Flow Injection	Retired
WI360	Total Kjeldahl Nitrogen in Water and Waste Water	In Progress
WI370	Turbidity of Water and Waste Water—Nephelometric	Retired

Gravimetry

WI400 Total Dissolved Solids in Water and Waste Water—Filterable Residue 08/91

WI410 Total Suspended Solids in Water and Waste Water—Nonfilterable Residue . . . . . Retired

Ion Chromatography

WI420 Calcium and Magnesium in Water and Waste Water—IC . . . . . Retired

WI425 Chloride and Sulfate in Water and Waste Water—IC . . . . . In Progress

WI428 Hardness of Water and Waste Water—Calculation 02/92

WI430 Sodium and Potassium in Water and Waste Water—IC . . . . . Retired

WI435 Sodium, Potassium, Calcium, and Magnesium by IC—Isocratic Determination with IONPAC CS10 Column 06/92

Potentiometry

WI440 Ammonia in Water and Waste Water—ISE . . . . . In Progress

WI450 Conductivity 08/91

WI460 Fluoride in Water and Waste Water 08/91

WI468 PH of Organic Waste Materials 11/91

WI470 PH of Water and Waste Water 02/92

WI480 Residual Chlorine in Water—Amperometric Titration 08/91

Titrimetry

WI500 Alkalinity in Water and Waste Water 09/91

WI510 Chemical Oxygen Demand in Water and Waste Water—Titration . . . . Retired

WI520 Halides in Waste Water and RCRA Waste . . . . . Retired

WI529 Sulfite in Water and Waste Water—Titrimetry 03/91

WI530 Total Cations in Water and Waste Water—Ion Exchange and Potentiometric Titration 08/91

Miscellaneous

WI600 Ash of Organic Waste Material . . . . . Retired

WI610 Corrosivity of Solution Toward Steel 03/93

WI620 EP Toxicity Extraction . . . . . Retired

WI630 Flash Point—Pensky-Martens Closed Cup Tester 02/92

WI640 Heat Capacity of Combustible Materials 02/92

WI650 Inorganic Toxicity Characteristic Leaching Procedure (TCLP) 12/92

WI660 Oil and Grease, Total Recoverable 02/92

WI670 Specific Gravity of Water and Waste Water 02/92

WI680 Trace Metal Digestion—Drinking Water, Surface Water, and NPDES Effluents 01/92

WI690 Trace Metal Digestion—RCRA (SW-845 Method 7000) . . . . . In Progress

WI700 Trace Metal Digestion—Sludge 02/91

WI710 Viscosity . . . . . In Progress

Waste Water Analytical Procedures - Radiochemical

WR100 Americium-241 in Waste Water—Instrumental Gamma-Ray Spectrometry Using a Ge(Li) Detector 05/92

WR110 Americium-241 in Waste Water and Filter Cake—Instrumental Gamma-Ray Spectrometry Using a NaI Detector 11/90

WR120 Cesium-137 in Waste Water—Instrumental Gamma-Ray Spectrometry 10/90

WR130 Cesium (Radioactive) in Waste Water—Phosphomolybdate Procedure ..... Retired

WR140 Gamma Activity in Waste Water—Gamma Spectrometry with Lithium-Drifted Germanium Detector 10/90

WR150 Gross Alpha, Beta, and Gamma Activity in Waste Water, Filter Cake, and Organic Materials—Gas-Flow Proportional Counting 10/90

WR160 Gross Gamma Activity in Liquid Waste Water—NaI Detector ..... Retired

WR170 Plutonium, Americium, and Uranium in Waste Water and Filter Cake—Aluminum Nitrate/Aliquat-336 Procedure ..... Retired

WR180 Plutonium, Americium, and Uranium in Waste Water and Filter Cake—Neodymium Fluoride Coprecipitation 11/90

WR190 Strontium-89 and Strontium-90 in Waste Water—Ion Exchange 12/90

WR200 Tritium in Waste Water—Liquid Scintillation Counting 11/90

Quality Control Analytical Techniques

Quality Control Analytical Procedures - Inorganic

QCI100 Beryllium and Lead for Vegetation Ash—QC Sample Preparation 02/93

QCI110 TCLP Elements for Water and Soil—QC Sample Preparation 10/92

QCI120 Oil and Grease in Water—QC Sample Preparation 03/93

QCI130 TCA in Urine—QC Sample Preparation ..... In Progress

QCI140 Trace Elements on Filter Media—QC Sample Preparation 09/92

QCI150 Trace Elements in Solvent—QC Sample Preparation 09/92

QCI160 Trace Elements in Urine—QC Sample Preparation ..... In Progress

QCI170 Trace Elements in Nitric Acid—QC Sample Preparation 10/92

QCI180 Trace Elements in Hydrochloric Acid—QC Sample Preparation 10/92

QCI190	Trace Elements in Water—QC Sample Preparation	10/92
QCI200	Trace Elements for Water and Soil (Hg by TCLP)—QC Sample Preparation	03/93
QCI210	Trace Elements in Water (CN)—QC Sample Preparation	03/93
QCI220	Trace Elements in Water (NO_2-N)—QC Sample Preparation	03/93

Quality Control Analytical Procedures - Organic

QCO100	Formaldehyde—QC Sample Preparation	In Progress
QCO110	Herbicides on Soil—QC Sample Preparation	In Progress
QCO120	Herbicides in Water—QC Sample Preparation	In Progress
QCO130	Organic Compounds on Tubes and Badges—QC Sample Preparation	08/92
QCO140	Pesticides on Soil—QC Sample Preparation	In Progress
QCO150	Pesticides in Water—QC Sample Preparation	In Progress
QCO160	Polychlorinated Biphenyls on Florisil Tubes—QC Sample Preparation	In Progress
QCO170	Polychlorinated Biphenyls in Oil—QC Sample Preparation	07/92
QCO180	Polychlorinated Biphenyls in Oil from EPA Standards—QC Sample Preparation	In Progress
QCO190	Polychlorinated Biphenyls on Soil—QC Sample Preparation	07/92
QCO200	Polychlorinated Biphenyls on Swipes—QC Sample Preparation	03/92
QCO210	Semivolatile Organic Compounds on Soil—QC Sample Preparation	08/92
QCO220	Semivolatile Organic Compounds in Water—QC Sample Preparation	08/92

QCO230	Volatile Organic Compounds on Charcoal Tubes—QC Sample Preparation	In Progress
QCO240	Volatile Organic Compounds in Oil—QC Sample Preparation	In Progress
QCO250	Volatile Organic Compounds on Soil—QC Sample Preparation	08/92
QCO260	Volatile Organic Compounds in Water—QC Sample Preparation	08/92

Quality Control Analytical Procedures - Radiochemistry

QCR100	Americium-241 in Urine—QC Sample Preparation	09/92
QCR110	Cesium-137 on Soil—QC Sample Preparation	02/93
QCR120	Cesium-137 on Vegetation Ash—QC Sample Preparation	02/93
QCR130	Cesium-137 in Water—QC Sample Preparation	02/93
QCR140	Gross Alpha and Gross Beta on Soil—QC Sample Preparation	03/93
QCR150	Gross Alpha and Gross Beta in Water—QC Sample Preparation	03/93
QCR160	Plutonium and Americium on Soil—QC Sample Preparation	02/93
QCR170	Radionuclides on Vegetation Ash—QC Sample Preparation	02/93
QCR180	Plutonium and Americium in Water—QC Sample Preparation	02/93
QCR190	Plutonium-238 in Urine—QC Sample Preparation	09/92
QCR200	Plutonium-239 in Urine—QC Sample Preparation	09/92
QCR210	Radionuclides on Filter Media—QC Sample Preparation	03/93
QCR220	Radium-226 in Water—QC Sample Preparation	02/93
QCR230	Strontium-90 on Soil—QC Sample Preparation	02/93
QCR240	Strontium-90 in Water—QC Sample Preparation	09/92
QCR250	Tritium and Percent Moisture on Soil—QC Sample Preparation	02/93
QCR260	Tritium in Urine—QC Sample Preparation	09/92

QCR270	Tritium in Water—QC Sample Preparation	03/93
QCR280	Uranium in Soil—QC Sample Preparation	02/92
QCR290	Uranium-235 in Urine—QC Sample Preparation	Retired
QCR300	Uranium-238 in Urine—QC Sample Preparation	Retired

Miscellaneous Procedures

	General Procedure for Cleaning Laboratory Equipment	In Progress
QCM200	Preparation of a Vegetation Ash Matrix	03/93

Quality Control Analytical Procedures - Intercomparison Studies

QCS100	EPA Air Filter Intercomparison Study	In Progress
QCS110	DOE Beryllium Intercomparison Study	In Progress
QCS120	EPA Drinking Water Study	In Progress
QCS130	EPA Gamma in Water Intercomparison Study	In Progress
QCS140	EPA Gross Alpha/Beta in Water Intercomparison Study	In Progress
QCS150	EPA Performance Evaluation Study	In Progress
QCS160	NPDES Study	In Progress
QCS170	NIOSH PAT Program	In Progress
QCS180	EPA Plutonium in Water Intercomparison Study	In Progress
QCS190	EML Quality Assessment Program	In Progress
QCS200	EPA Radionuclides in Milk Intercomparison Study	In Progress
QCS210	EPA Radium in Water Intercomparison Study	In Progress
QCS220	EPA Strontium in Water Intercomparison Study	In Progress
QCS230	EPA Tritium in Water Intercomparison Study	In Progress

QCS240	EPA Uranium in Water Intercomparison Study	In Progress
QCS250	EPA Water Pollution Study	In Progress

Intercomparison Studies

General Procedure for Distributing Beryllium Study	In Progress
General Procedure for Distributing EML Study	In Progress
General Procedure for Distributing EPA Drinking Water Study	In Progress
General Procedure for Distributing EPA Water Pollution Study	In Progress
General Procedure for Distributing EPA Radionuclide Environmental Monitoring Studies	In Progress
General Procedure for Distributing NIOSH PAT Study	In Progress
General Procedure for Distributing NPDES Study	In Progress

Laboratory Safety

LS-1	Safety Policy	01/90
LS-2	Emergency Plan	01/90
LS-3	Emergency Response	01/90
LS-4	Personnel Safety	01/90
LS-5	General Laboratory Procedures	01/90
LS-6	Chemical Safety and Chemical Hazard Communication	01/90
LS-7	Laboratory First Aid	01/90

INTRODUCTION

The following abbreviations and reagent and procedural conventions are used in the written methods:

1. Abbreviations

1.1. Standard prefixes are used with the abbreviations for gram (g), liter (L), meter (m), and curie (Ci).

These are

c	— centi	10^{-2}	n	— nano	10^{-9}
m	— milli	10^{-3}	p	— pico	10^{-12}
μ	— micro	10^{-6}	f	— femto	10^{-15}

1.2. Other abbreviations are

°C	degrees Celsius	S	siemens (1/ohm)
N	normal	amu	atomic mass units
M	molar	RT	retention time

1.3. Abbreviations for instrumental techniques

AA	atomic absorption
ALS	automatic liquid sampler
CVAA	cold vapor atomic absorption
ETVAA	electrothermal vaporization atomic absorption
FAA	flame atomic absorption
FTIR	Fourier transformation infrared spectroscopy
GC	gas chromatography
GC/ECD	gas chromatography/electron capture detector
GC/FID	gas chromatography/flame ionization detector
GC/HECD	gas chromatography/Hall electrolytic conductivity detector
GC/MS	gas chromatography/mass spectrometry
GC/PID	gas chromatography/photoionization detector
GC/PT	gas chromatography/purge and trap
HAA	hydride generation atomic absorption
HPLC	high pressure liquid chromatography
IC	ion chromatography
ICPAES	inductively coupled plasma atomic emission spectrometry

ICPMS	inductively coupled plasma mass spectrometry
IENA	instrumental epithermal neutron activation
ITNA	instrumental thermal neutron activation
IR	infrared
MS	mass spectrometry
NAA	neutron activation analysis
RENA	radiochemical epithermal neutron activation
RTNA	radiochemical thermal neutron activation
TCGS	thermal neutron capture prompt gamma-ray spectrometry

1.4. Radioactivity Units

	Equivalent Activity in Other Units				
Activity Unit	**dis/min**	**dis/sec (Bq)**	**pCi**	**μCi**	**Ci**
1 dis/min	**1**	**0.0167**	**0.450**	**4.50×10^{-7}**	**4.50×10^{-13}**
1 dis/sec (Bq)	**60**	**1**	**27.0**	**2.70×10^{-5}**	**2.70×10^{-11}**
1 pCi	**2.22**	**0.0370**	**1**	**10^{-6}**	**10^{-12}**
1 μCi	**2.22×10^{6}**	**3.70×10^{4}**	**10^{6}**	**1**	**10^{-6}**
1 Ci	**2.22×10^{12}**	**3.70×10^{10}**	**10^{12}**	**10^{6}**	**1**

1.5. Mass Units

Unit	Abbreviation	Wt/Wt	Wt/Vol	Vol/Vol
parts per million	**ppm**	**mg/kg**	**mg/L**	**μL/L**
		μg/g	**μg/mL**	**nL/L**
parts per billion	**ppb**	**μg/kg**	**μg/L**	**nL/L**
		ng/g	**ng/mL**	
milligram percent	**mg%**	**mg/100 g**	**mg/100 mL**	

2. Chemical Conventions

2.1. Freshly opened bottles of commercial concentrated acids and ammonium hydroxide are uniformly of the concentrations indicated below.

HOAc	17.4 M (100%)
HCl	11.6 M (36%)
HNO_3	15.4 M (69%)
H_3PO_4	14.6 M (85%)

H_2SO_4	17.8 M (95%)
NH_4OH	14.8 M (28%)

2.2. Water or H_2O refers to distilled water that is passed through an ion exchange column composed of a mixture of both acidic cation and basic cation exchange resins.

2.3. Diluted acids are usually given as parts of acid to be added to parts of water. Thus 1:9 means one part of concentrated acid plus 9 parts of water by volume. In some procedures, normality (N) or molarity (M) values are given.

2.4. Concentrations or dilutions are approximate, unless stated as exact or that preparation or dilution in a volumetric flask is required.

2.5. Chemicals should be reagent grade, free from particles and color, conforming to the specifications of the Committee on Analytical Reagents of the American Chemical Society, where such specifications are available.

2.6. The conventions used for pH determination are that wide-range pH paper may be used for obtaining the pH indicated unless measurements with narrow-range paper or a pH meter are specifically mentioned.

2.7. All standards used, wherever possible, are traceable to National Bureau of Standards Standard Reference Material or to other commercially available standards.

2.8. It is considered that good analytical and laboratory safety practices will be followed in all work: that apparatus is clean, that care will be exercised to prevent contamination of samples, that all transfers are quantitative, and that all precipitates are washed carefully. Where qualifications appear, they indicate that extra care is required.

2.9. Precision and accuracy statements are provided for each procedure where possible. These statements are derived from quality control studies conducted by laboratory personnel and from quality assurance samples obtained from the US Environmental Protection Agency, the NIOSH Proficiency Analytical Testing (PAT) Program, the US National Bureau of Standards, and the International Atomic Energy Agency.

2.10. Approximate tracer concentrations are given in the calibration and standards section of each procedure.

2.11. The Acceptable Minimum Detectable Activity is defined in the Performance Criteria for Radiobioassay, ANSI N 13.30, as follows: The amount of activity, based on "need" and existing "state of the art," that indirect bioassay procedures should be able to measure.

2.12. Methods of preservation are relatively limited and are intended generally to (1) retard biological action, (2) retard hydrolysis of chemical compounds and complexes, and (3) reduce volatility of constituents. Preservation methods are generally limited to pH control, chemical addition, refrigeration, and freezing.

DOCUMENT CONTROL AND DOCUMENT CHANGE

1. Document Control

Document control in the analytical laboratory is needed to ensure that personnel have current methods, specifications, and standards in their possession and that they are not using obsolete documents. A document control system ensures that: 1) analyses and calibrations are carried out in accordance with the latest analytical document issue; 2) an effective communication system between personnel is developed; 3) a central storage and issue point for analytical documents and changes is established; and 4) the legal and accreditation requirements are met.

The Quality Control Coordinator will maintain full control of the distribution of analytical documents. A central file shall be maintained showing the following information:

- Procedure title,
- Method number,
- Section originating the document,
- Effective date,
- Latest change date,
- Signatures of persons approving changes, and
- Signatures of persons receiving the document.

A complete archival file will be maintained in the Group Office.

Whenever a change is made, the Quality Control Coordinator shall issue the new document together with the approved change request. Recipients of new or changed documents must acknowledge receipt by signature. Obsolete documents shall be returned from all files and points of use to the Quality Control Coordinator and shall be logged in and destroyed.

The Section Leader shall retain a copy of each obsolete analytical document in a historical file stating the dates that the document was in use.

2. Document Change

Requests for changes to analytical methods may be initiated by Laboratory personnel by completing the Analytical Method Change Request form (Fig. 1). The change must be approved by the Deputy Group Leader for Chemistry, the Section Leader, and the Quality Control Coordinator before the change is used and distributed.

Changes may be officially announced by issuing entirely new documents or replacement pages or, in the case of minor changes, corrections of errata, etc., by requesting that pen-and-ink changes be made to the original document. This action shall be noted on the change request form and in the Laboratory notebook where results are recorded from the

analysis. The Quality Control Coordinator is responsible for obtaining the required signatures and for distributing the documents to those concerned.

3. Document Changes—New Analytical Methods

These procedures shall be followed when new analytical methods are proposed to replace existing methods. Suggestions or requests for changes in analytical methods that will give results equal to or better than present procedures are encouraged from all personnel. No changes from approved procedures shall be made without following the procedures under Section 2.

A request for study of major changes in analytical methods shall be made in writing to the Section Leader. Major changes are defined as those changes that will require a significant amount of personnel time to show a benefit to the Section's effort. All such studies undertaken shall have written approval of the Section Leader and shall follow a well-planned experimental design to allow for completion of the study in an orderly time frame.

Reports on the progress of the study, including all raw data, shall be made to the Section Leader. A report shall be written for review when the experimental study is completed. If the study indicates that an improvement in the method of the analysis may result, a comparison study of the results obtained using the new method and the old method shall be outlined.

4. Methodology for Testing Analytical Procedures

The following methodology shall be followed to statistically test analytical procedures.

4.1. Old vs New Methods. Suggestions for improvements in existing analytical procedures are encouraged. If the existing procedure has shown poor accuracy or precision, a review of the procedure should be undertaken to determine if the documented procedure is being followed correctly. A review of the literature should be undertaken before beginning the development of a new procedure.

Following completion of the experimental studies and completion of a report to the Section Leader, a comparison study of the new and old procedures shall be made that will allow statistical testing of results measured by both methods. Statistical tests used for these studies shall be standard statistical methods.

If the new procedure results show high accuracy and precision compared to the old procedure results, as few as 10 samples analyzed by both methods may show highly significant improvement that will warrant acceptance of the new method. However, when an existing procedure shows high precision and accuracy, it may be necessary to analyze a large number of samples to show a statistically significant improvement between the two methods of analysis. The number of samples that is used to compare the methods will depend on the entire study, including the planning and care that was exercised in obtaining the results.

The following conditions should be examined when setting up a comparison study:

- Sensitivity for detecting the material of interest;
- Limitations, if any, on the concentration that can be measured;
- Interference factors that may give false positive or false negative results; and
- Levels of accuracy and precision required to meet good analytical standards.

The routine samples submitted for analysis should be equally divided and each half analyzed by the two methods under study. Because statistical testing can only be performed on positive data, either NBS standard reference materials or spiked samples prepared by the Quality Control Coordinator must be included in the studies. These samples should be similar to the procedure outlined under evaluation of new procedures in Section 4.2. Results from these studies should be evaluated by the analyst for significance as data become available.

4.2. New Procedures Evaluation. Evaluation of new procedures shall include the analysis of sufficient samples to allow for study of the same parameters outlined in Section 4.1, Evaluation of Old vs New Methods.

To allow for statistical testing of results from analytical procedures, the following steps should be followed. A series of no less than four sets of NBS standard reference materials and/or quality control samples, of the same matrix as the samples to be analyzed, should be prepared. Each of the sets should include no less than three samples. The concentration spike in these sets should bracket the concentrations of material that would normally be measured by the procedure. These steps will allow for testing the resulting data by standard statistical methods.

ANALYTICAL METHOD CHANGE REQUEST

Date_____ Method No._____

Method Title_____

Requested by_____

Change from_____

_____

_____

_____

_____

Change to_____

_____

_____

_____

_____

Reason for change_____

_____

_____

_____

_____

Approved by:

Section Leader_____ Date_____

Quality Control Coordinator_____ Date_____

Fig. 1. Analytical method change request.

Radiobioassay Chemistry

CONTENTS

Preface R-3

Acknowledgments R-5

Abstract R-7

The page numbering convention used in this manual consists of the specific procedure number (shown at left in list below) followed by the page number for that procedure. Thus, R110-2 is page two of procedure R110. The right column in the list below gives each procedure's status or effective date.

Radiobioassay Chemistry Analytical Techniques

Radiobioassay Analytical Procedures

R100	Americium in Urine—Alkaline Earth Phosphate	02/93
R110	Americium and Plutonium in Fecal Samples—A Screening Procedure	02/93
R120	Cesium-137 in Urine	Retired
R130	Gross Beta Activity	Retired
R150	Phosphorus-32 in Urine	Retired
R160	Polonium-210 in Urine	Retired
R170	Plutonium in Urine—Alkaline Earth Phosphate Procedure	09/91
R190	Plutonium in Urine—Rapid Method	Retired
R210	Thorium in Urine—Colorimetric	Retired
R230	Tritium (T_2O or TOH) in Urine—Direct Procedure	09/92
R240	Tritium in Urine—Distillation	Retired
R250	Uranium—Delayed Neutron Counting	07/91

R260 Uranium in Urine—Anion Exchange and Radiometric ..... Retired

R261 Uranium (Isotopic) in Urine—Alkaline Earth Phosphate and Alpha Spectrometry 09/92

R270 Uranium in Urine—Anion Exchange and Colorimetric ..... Retired

R280 Uranium-238 Fluorometric ..... Retired

R290 Uranium in Urine—ICPMS 11/90

PREFACE

This collection of radiochemistry procedures was prepared to document the analytical methodology used by the Radiochemistry Section of the Environmental Chemistry Group. It is part of the overall quality control effort to support the health and safety programs of the Los Alamos National Laboratory.

This section of the manual contains procedures and methods used for the isolation, identification, and quantitative determination of radionuclides in bioassay samples. These methods measure the concentration of the analytes with the precision, accuracy, and specificity required by health physics dosimetry.

The analytical procedures were developed and modified by senior laboratory chemists, and previously published standard methods have been improved to shorten the time required for analysis of large numbers of samples. The procedures have been tested over an extended period of time by chemists and technicians to prove their validity. Precision and accuracy statements derived from quality control studies at the Laboratory are provided. Each procedure is presented simply and concisely. It is hoped that the procedures in this section will be usable by any competent analyst.

ACKNOWLEDGEMENTS

The encouragement, leadership, and support offered by Group EM-9 management are appreciated. The contributions of the following individuals in developing, evaluating, or writing the methods contained herein gratefully acknowledged:

Daryl Knab, Radiochemistry Section Leader
Steven J. Goldstein
Harold M. Ide
Gloria M. Martinez
William D. Moss
Rubanna R. Rodriguez

This section is prepared in loose-leaf form to facilitate revisions of the procedures and the inclusion of additional procedures or data sheets. Inquiry for clarification of any part of this manual or for difficulties encountered as a result of applying the procedures is welcome.

Margaret A. Gautier
Editor

Radiobioassay Chemistry
Analytical Techniques

Edited by

Margaret A. Gautier

ABSTRACT

This section of the manual has been prepared to document the analytical methodology used by the Los Alamos National Laboratory Radiochemistry Section of the Environmental Chemistry Group. It is part of the overall quality control effort to support the health and safety programs of the Laboratory. The section contains procedures and methods used for the isolation, identification, and quantitative determination of radionuclides in bioassay samples. The analytical procedures were developed and modified by senior laboratory chemists, and previously published standard methods have been improved to shorten the time required for analysis of large numbers of samples. The procedures have been tested over an extended period of time by chemists and technicians to prove their validity. The methods measure the concentration of the desired analytes with the precision, accuracy, and specificity required by health physics dosimetry. The procedures utilize equipment and skills available in modern radiochemistry laboratories. Precision and accuracy statements derived from quality control studies at the Laboratory are provided. This section includes radiometric procedures for analysis of bioassay samples for ^{241}Am, ^{137}Cs, Gross Beta, ^{32}P, ^{210}Po, ^{238,239}Pu, ^{3}T, $^{235-238}$U. Colorimetric procedures for Th and U are also included. Each procedure is presented in a simple and concise manner and includes sample collection and storage, interferences, apparatus, reagent preparation, calibration methods, and data reduction formulas.

AMERICIUM IN URINE—ALKALINE EARTH PHOSPHATE PROCEDURE

Analyte: Americium	**Method No.:** R100
Matrix: Urine	**Accuracy and Precision:** 93% ± 3% (mean ±1 sigma) at the 2-pCi level
Minimum Detectable Activity: 0.03 pCi/700 mL	**Acceptable Minimum Detectable Activity:** Urine 0.06 pCi/L
Procedure: Coprecipitation and alpha spectrometry	
Effective Date: 07/01/82	**Contact Person:** Edward Gonzales Gloria Martinez Steve Goldstein

SAFETY NOTE: Before beginning this procedure, read all of the Material Safety Data Sheets for the chemicals listed in Sec. 7. Read Sec. 4.3 of the EM-9 Safety Manual for information on personal protective clothing and equipment. Read Sec. 12 of this procedure and Source Materials 13.9 to 13.12 for proper waste disposal practices.

1. Principle of Method

1.1. Americium is quantitatively recovered from urine without destruction of organic matrix by wet ashing.

1.2. Americium is coprecipitated with alkaline earth phosphate.

1.3. The organic material is removed by reprecipitation.

1.4. Americium is separated by solvent extraction and absorbed onto anion-exchange resin.

1.5. Americium is eluted from the column with a 60:40 mixture of MeOH and 2.5 M HNO_3.

1.6. Americium is electrodeposited on a stainless-steel disk and the alpha activity determined by alpha pulse height analysis. Americium-243 tracer recovery is used to correct for chemical loss.

2. Sensitivity

2.1. Sensitivity is limited by the counter background.

2.2. For routine measurements with a 70,000-s counting period and a counting efficiency of 30%, the minimum detection limit (the 95th percentile of the background distribution) is 0.03 pCi per sample. See Step 11.3.3.

3. Accuracy and Precision

3.1. Average recovery of ^{243}Am tracer is equal to 93% ± 3% at the 2-pCi concentration level.

4. Interferences

4.1. Interference is caused by alpha activity from thorium.

4.2. If the presence of plutonium in the sample is suspected, the plutonium must be removed using the standard plutonium procedure R170.

5. Collection and Storage of Samples

5.1. Equivalent 24-h samples, two morning and two evening voidings, are collected in specimen bottles. The minimum volume analyzed for routine measurements should be 500 mL to allow detection of the americium relative to an estimated 24-h excretion.

5.2. Refrigerate samples before analysis.

6. Apparatus

6.1. Alpha spectrometer: equipped with 1024-channel analyzer using 300-mm^2 silicon-surface barrier detectors.

6.2. Beakers: 25-, 100-, 250-, and 1000-mL tall form.

6.3. Coin holders: Grisby Bros., 817 N.E. Madroma, Portland, Oregon 87211, to hold disks after plating.

6.4. Electrodeposition apparatus: dc power supply to provide up to 500 mA of regulated current to each electrolytic cell.

6.5. Electrolytic cell (Fig. 1): polyethylene cell body 2.22-cm-o.d. by 9.0-cm-long, threaded on one end and a stainless-steel cap threaded to fit and hold a 1.59-cm-diam stainless-steel disk in place. Fabricated at Los Alamos.

6.6. Graduated cylinders: 10-, 50-, 1000-, and 2000-mL.

6.7. Hot plates: 500- and 1000-watt, adjustable to 200°C.

6.8. Ion-exchange column for americium (Fig. 2): borosilicate glass barrel with polypropylene reservoir, column tip, and bed support, 20-cm-long by 1.0 cm-i.d., Catalog No. 737-1242, Bio-Rad Laboratories, Chemical Division Sales Office, 2200 Wright Avenue, Richmond, California 94804.

6.9. Magnetic stirring hot plates: Thermolyne Model SP-10105B, or equivalent.

6.10. Stainless-steel disks: 1.59-cm (5/8-in.) disk, fabricated from 15- to 20-mil 316 stainless steel, cold rolled or No. 4 finish.

6.11. Teflon-coated stirring bars: 1-1/2-in.

6.12. Fume hood.

6.13. Infrared heat lamp: 250-watt.

6.14. Eye droppers.

6.15. Polyethylene wash bottles: 16-oz.

6.16. Glass wool.

6.17. Fluted funnels: 75-mm.

6.18. Filter paper: Whatman No. 541, 11-cm-diam.

6.19. Funnels: powder, polypropylene, Nalgene, 65-mm-top i.d., 50-mm i.d. stem diam, to attach to the plastic adapter on the column. VWR Scientific, Los Alamos, New Mexico 87545, Catalog No. 30255-022.

6.20. Separatory funnels: 125-mL.

6.21. Funnel: 2-L Buchner, fritted disc.

6.22. Wash bottle: 250-mL, polyethylene.

7. Reagents

7.1. Nitric acid (8 M). Dilute 1000 mL of concentrated HNO_3 (70%, specific gravity 1.42) to 2000 mL with H_2O.

7.2. Sodium hydroxide (25 weight percent). Dilute the 50% reagent with an equal volume of H_2O.

7.3. Nitric acid (concentrated 70%, reagent-grade).

7.4. Americium-243 tracer solution (approximately 2 pCi/mL in 7.8 N HNO_3).

7.5. 1-Octanol (Eastman, practical-grade).

7.6. Sodium sulfate solution (15%). Dissolve 150 g of anhydrous sodium sulfate and dilute to 1000 mL with water. Filter.

7.7. Sodium bisulfate solution (5%). Dissolve 50 g of $NaHSO_4 \cdot 4H_2O$ and dilute to 1000 mL with H_2O.

7.8. Calcium nitrate solution. Dissolve one pound (453 g) of $Ca(NO_3)_2 \cdot 4H_2O$ and dilute to 450 mL with H_2O. Filter the solution through a Whatman filter paper.

7.9. Hydrogen peroxide solution (30%).

7.10. Bio-Rad anion-exchange resin (AG MP-1, 100-200 mesh) chloride form, for americium. Convert the chloride form to the nitrate form.

7.10.1. Transfer 1 pound of resin to a 2-L beaker using a small amount of 1 M HNO_3.

7.10.2. Add 1 L of 1 M HNO_3 to the resin and stir on a magnetic stirrer for 15 min.

7.10.3. Filter the resin through a 2-L fritted disc Buchner funnel. Allow to filter by gravity.

7.10.4. Wash the resin twice with 1-L aliquots of 1 M HNO_3.

7.10.5. Test the effluents for Cl^- by adding one drop of 1% $AgNO_3$. A white precipitate indicates the presence of Cl^-.

7.10.6. If a white precipitate forms, continue washing the resin with 1 M HNO_3 until no precipitate is formed when $AgNO_3$ is added.

7.10.7. Wash the resin with 1500 mL of distilled water and drain completely. (At this point the filtration may be done under suction.)

7.10.8. Air-dry the resin and store in the original bottle.

7.10.9. Label the bottle as "Washed, Nitrate-Form Resin" and date.

7.10.10. Aliquot an amount of resin sufficient to analyze a set of samples and transfer to a 250-mL wash bottle.

7.10.11. Add a sufficient amount of 60:40 ethanol nitric acid, Reagent A, to the wash bottle to form a slurry.

7.11. Hydrochloric acid (6 M). Dilute concentrated HCl with an equal volume of water and mix the solution.

7.12. Ammonium hydroxide (concentrated 28-30%, specific gravity 1.18).

7.13. Ammonium hydroxide solution (1%). Dilute 5 mL of concentrated NH_4OH to 500 mL with H_2O.

7.14. Phosphoric acid (85%, specific gravity 1.70).

7.15. Ammonium hydroxide (2 M). Dilute 266 mL of concentrated NH_4OH to 2 L with distilled water.

7.16. Sodium nitrite (saturated).

7.17. DDCP (Dibutyl-N,N-diethylcarbamyl phosphate, technical-grade). Columbia Organic Chemicals Co., Inc., Camden, SC 29020.

7.18. Dodecane (ACS reagent-grade).

7.19. Nitric acid (1 M). Add 125 mL of concentrated HNO_3 to 1875 mL of distilled water in a 2-L volumetric flask.

7.20. Nitric acid (2 M). Add 250 mL of concentrated HNO_3 to 1750 mL of distilled water in a 2-L volumetric flask.

7.21. Nitric acid (2.5 M). Add 81 mL of concentrated HNO_3 to 350 mL of distilled water in a 500-mL volumetric flask. Dilute to volume with distilled water when cool.

7.22. Nitric acid (6 M). Add 750 mL of concentrated HNO_3 to 1250 mL of distilled water in a 2-L volumetric flask.

7.23. Nitric acid (12 M). Add 1500 mL of concentrated HNO_3 to 500 mL of distilled water in a 2-L volumetric flask.

7.24. Ethanol nitric acid, Reagent A (60:40 mixture EtOH and 6 M HNO_3). Add 360 mL of 6 M nitric acid to 540 mL of ethanol. Prepare fresh.

7.25. EtOH-$NaNO_2$ (saturated). Add saturated $NaNO_2$ to ethanol and shake well.

7.26. Methanol nitric acid, Reagent B (75:25 mixture of MeOH and 6 M HNO_3). Add 180 mL of 6 M nitric acid to 540 mL of methanol. Prepare fresh.

7.27. Methanol nitric acid, Reagent C (60:40 mixture of MeOH and 6 M HNO_3). Add 288 mL of 6 M nitric acid to 432 mL of methanol. Prepare fresh.

7.28. Methanol nitric acid, Reagent D (60:40 mixture of MeOH and 2.5 M HNO_3). Add 288 mL of 2.5 M nitric acid to 432 mL of methanol. Prepare fresh.

7.29. Silver nitrate (1%). Add 1 g of $AgNO_3$ to 100 mL of distilled water.

8. Calibration and Standards

8.1. Americium-243 tracer.

8.1.1. The ^{243}Am stock solution is obtained from Oak Ridge National Laboratory.

8.1.2. The tracer solution is prepared in an acid medium (8 M HNO_3).

8.1.3. Concentration of the tracer is in the 2-pCi/mL (4.44-dis/min) range and is standardized against NIST reference material NIST-SRM-4906-B17, a ^{238}Pu standard.

8.2. Calibration of the alpha spectrometer.

8.2.1. The alpha secondary standards contain the isotopes ^{241}Am, ^{239}Pu, and ^{242}Pu and are standardized in a gas flow proportional counter using the NIST ^{238}Pu primary standard (NIST-SRM-4906-B17).

8.2.2. Calibration counts are made for 1020 s. The efficiency of each detector is determined by integrating the counts in 14 channels (7 channels to the left of the peak and 6 channels to the right of the peak) of the energy spectrum of each of the three isotopes.

8.2.3. Background counts are accumulated for each energy spectrum for each detector for 70,000 s.

9. Procedure

9.1. Chemical isolation.

9.1.1. Pour the entire sample into a 2000-mL graduated cylinder. Measure and record the volume, specific gravity, and temperature of the sample.

9.1.2. Add 5 drops of 1-octanol to the sample.

9.1.3. Rinse each sample bottle with approximately 5 mL of 7.8 M HNO_3. Add the acid wash to the sample. Mix the solution.

9.1.4. Pour 700 mL of urine into a 1000-mL tall form beaker. If less than 700 mL of urine is available, use the entire sample but not less than 500 mL. See Step 5.1.

9.1.5. For special samples with high activities, use procedure ER130, Gamma-Ray-Emitting Nuclides in Environmental Matrices—Instrumental Method.

9.1.6. Put a Teflon-coated stirring bar into the beaker, place it on a stirring hot plate, and start the stirrer.

9.1.7. Add 1 mL of ^{243}Am tracer solution. If the sample is also to be analyzed for plutonium, add 1 mL of ^{242}Pu tracer.

9.1.8. Turn on the hot plate to give a solution temperature of approximately 80°C.

9.1.9. Add 0.1 mL (2 drops) of $Ca(NO_3)_2$ solution.

9.1.10. Add 1 mL of concentrated H_3PO_4.

9.1.11. Add 10 mL of 30% H_2O_2.

9.1.12. Add 100 mL of concentrated NH_4OH. Continue stirring and heating for 60 min.

9.1.13. Remove the sample from the stirring hot plate, remove the stirring bar, and cover the beaker with a watch glass. Allow the sample to cool and settle for at least 120 min. The solution may stand overnight before proceeding to the next step.

9.1.14. Slowly decant the supernatant solution. The residual slurry should be less than 50 mL.

9.1.15. Add 200 mL of 2 M NH_4OH to the precipitate and stir for 30 min with heating. Allow to settle for 1 h and decant the supernate.

9.1.16. Repeat Step 9.1.15 and allow to settle overnight. Decant the supernate leaving the slurry.

9.1.17. Place the beaker containing the slurry on a hot plate set at approximately 100°C and evaporate to 10 mL. Let cool for 10 min.

9.1.18. Add 45 mL of concentrated HNO_3 to each sample. Place a stirring bar in the beaker, cover, and stir with heat for 5 min. The sample should be 12 M.

9.1.19. Cover the beaker with a watch glass and let cool for 10 min.

9.1.20. Add 1 mL of saturated sodium nitrite per 50 mL of solution.

9.1.21. Set the beaker on a magnetic stirring hot plate that has a surface temperature of approximately 85°C for 15 min.

9.1.22. Remove the beaker from the hot plate, remove the stirring bar, and allow the sample to cool for 10 min.

9.2. Extraction of americium.

9.2.1. Transfer the solution to a 125-mL separatory funnel. Rinse the beaker with 5 mL of concentrated HNO_3 and add the rinse to the separatory funnel.

9.2.2. Add 1 mL of undiluted DDCP per 50 mL of solution and shake for 15 s. Allow to stand until the phases separate (approximately 1 h).

9.2.3. Drain the lower aqueous phase and discard.

9.2.4. Add 10 mL of 12 M HNO_3 to the DDCP solution. Insert a glass stopper in the separatory funnel and shake vigorously for 3 s. Allow the phases to separate for 1 h.

9.2.5. Remove the stopper, drain the aqueous phase, and discard.

9.2.6. Add 5 mL of dodecane to the separatory funnel.

NOTE: The 2 M HNO_3 added in Step 9.2.7 strips the americium. Collect this phase in a 100-mL beaker.

9.2.7. Add 20 mL of 2 M HNO_3 to the separatory funnel.

9.2.8. Insert a glass stopper in the separatory funnel and shake vigorously for 10 s. Allow the phases to separate (1-2 h).

9.2.9. Remove the glass stopper and drain the aqueous solution into the 100-mL beaker.

9.2.10. Repeat Steps 9.2.7 through 9.2.9. The combined volume in the beaker is 40 mL.

NOTE: Drain the organic layer into a plastic-coated glass container containing 200 mL H_2O and label as organic waste. Seal the container with a stopper compatible with the solution that will release if pressure builds up in the bottle.

9.2.11. Place the beaker on a hot plate with a surface temperature of 80-90°C and take to dryness.

9.2.12. Add 10 mL of concentrated HNO_3 to the beaker and take to dryness.

9.2.13. Repeat Step 9.2.12.

9.3. Methanol nitric acid anion exchange.

9.3.1. Add 5 mL of 6 M HNO_3 to the sample. Cover with a watch glass and heat at 80-90°C for 10-15 min to dissolve the sample.

9.3.2. Cool for 10 min.

9.3.3. Add 7.5 mL of EtOH saturated with $NaNO_2$ to the sample. Cover and allow to stand while the column is prepared.

9.3.4. Add a slurry of AG MP-1 (100-200 mesh) nitrate-treated resin as prepared in Steps 7.10.1 through 7.10.9 to a settled height of 7 cm (measure the column from the bottom of the filter base).

9.3.5. Firmly place a 50-mL funnel into the top of the column.

9.3.6. Add 40 mL of 60:40 ethanol nitric acid, Reagent A, to the column. Place a 400-mL beaker under the column.

9.3.7. Transfer the sample to the column funnel. Rinse the beaker with 5 mL of 60:40 ethanol nitric acid, Reagent A, and add to the column.

9.3.8. Wash the column with 40 mL of 75:25 methanol nitric acid, Reagent B.

9.3.9. Wash the column with 40 mL of 60:40 methanol nitric acid, Reagent C. Remove the beaker from under the column.

9.3.9.1. Add 200 mL of H_2O to the beaker and evaporate to dryness.

NOTE: Save the fraction until radiochemical recovery has been verified. Rework this fraction if recoveries are low.

9.3.10. Elute the americium from the column with 40 mL of 60:40 MeOH and 2.5 M HNO_3, Reagent D, and collect in a 100-mL beaker for electroplating.

9.3.11. Add 2 mL of 5% $NaHSO_4$ solution to the 100-mL beaker. Stir the solution.

9.3.12. Evaporate the slurry to dryness on a hot plate with a surface temperature of 150-185°C. The surface temperature should not be above 150°C for the first 30 min because the solution may spatter.

9.3.13. Wash the beaker with a minimum amount of 6 M HCl and evaporate to dryness at a temperature of 120-150°C. Repeat the washing and evaporation a second time.

9.4. Electrodeposition.

9.4.1. Add enough H_2O to cover the bottom of the 30-mL beaker and allow to stand a minimum of 15 min.

9.4.2. Remove the backing (paper or plastic) from the stainless-steel disk and wash the disk with acetone.

9.4.3. Assemble the cell, placing the disk into the bottom depression of the cap, and screw together.

9.4.4. Fill the cell with water to test for leaks. Discard the water.

9.4.5. Add 4 mL of electrolyte solution (15% Na_2SO_4) to the cell.

9.4.6. Add the sample to the cell.

9.4.7. Rinse the sample beaker with water and add the wash to the cell. Fill to within 5 mm of the top.

9.4.8. Place the cell in the electrodeposition rack and cover with a plastic cover.

9.4.9. Attach the cathode lead to the cell cap.

9.4.10. Turn the main switch of the electrodeposition unit. Turn the switch on each unit to positive and set a current of 0.5 ampere.

9.4.11. Electroplate for 180 min (3 h).

9.4.12. Add 1 to 2 mL of 25% NaOH to the cell and, after 60 s, turn off the current.

9.4.13. Pour the solution out of the cell and disassemble the cell. Wash the stainless steel disk with 1% NH_4OH solution. **Do not touch the surface of the disk.**

9.4.14. Dry the disk under a heat lamp, number the back of the disk with a marking pen, and put the disk, numbered and labeled with sample identification, into the coin holder.

9.4.15. Determine the pCi/min for ^{241}Am and ^{243}Am by pulse height alpha spectrometry.

10. Operation of the Alpha Spectrometer

10.1. Refer to the operating manual for the alpha spectrometer.

11. Calculations

11.1. Samples are counted for 70,000 s. The counts are determined for each of the two isotopes by integrating the counts in 14 channels (7 channels to the left of the peak and 6 channels to the right of the peak) for each energy spectrum. See Table I.

11.2. Calculations are made using the following formulas:

11.2.1. Determination of chemical recovery.

$$RF = \frac{C_s - C_b}{T \times D \times S} ,$$

where RF = recovery factor for ^{243}Am tracer,
C_s = ^{243}Am sample counts,
C_b = ^{243}Am background counts,
T = count length in minutes,
D = detector counting efficiency, and
S = dis/min of ^{243}Am standard.

11.2.2. Determination of the amount of ^{241}Am tracer in the sample.

$$pCi = \frac{C_s - C_b}{T \times D \times RF \times 2.22} ,$$

where pCi = amount of ^{241}Am tracer in the sample,
C_s = ^{241}Am sample counts,
C_b = background counts,
T = count length in minutes,
D = detector efficiency,
RF = recovery factor for ^{243}Am, and
2.22 = factor to convert dis/min to pCi.

11.2.3. Urine samples are corrected for estimated 24-h excretion based on the sample volume and specific gravity (corrected to 15°C).

$$T = V + [((SG - 1.000) \times 1000) \times 21] + (-415) \quad ,$$

where T = time in minutes,
V = volume in mL of aliquot analyzed, and
SG = specific gravity of aliquot.

$$EE = \frac{Am \times 1440}{T} \quad ,$$

where EE = estimated excretion for 24 h,
Am = pCi of Am in aliquot analyzed,
1440 = minutes in 24-h period, and
T = time in minutes.

11.3. Detection limits.

11.3.1. The minimum detectable amount (MDA) of americium alpha activity determined by this procedure depends on the instrument background counts in the energy area of the ^{241}Am, the tracer recovery, and the counting efficiency of the system.

11.3.2. Calculation of the MDA.

$$MDA = \frac{(4.65 \times S_b + 3)}{E \times RT \times T} \quad ,$$

where MDA = minimum detectable amount expressed in dis/min,
4.65 = constant necessary to achieve desired protection against Type I and Type II statistical errors at the 0.05 confidence level,
3 = constant to allow for error of small-count statistics associated with Poisson distributions,
S_b = the standard deviation of the population of counts obtained from the analysis of quality control blank urine samples (see note below).
E = detector counting efficiency (expressed as a fraction),
RT = chemical recovery (expressed as a fraction), and
T = standardized sample counting time (1167 min).

NOTE: The blank counts for the americium 5.5-keV alpha energy average 3 counts per 70,000 s, and the estimated value of S_b is the square root of 3, or 1.73.

11.3.3. The MDA for a sample using this formula would be 0.06 dis/min or 0.03 pCi per sample aliquot. The calculation assumes a mean recovery of the tracer of 60%, a mean background of 3 counts, a 1167-min count length, and a counting efficiency of 30%. If higher tracer recoveries are achieved, >60%, a lower MDA is also achieved. MDAs are calculated for each reported sample. Correction for sample volume is not included in the above formula, and this factor must be taken into account when results are expressed per total sample volume analyzed.

11.3.4. If results are to be reported in Bq, divide the dis/min by 60.

12. Proper Waste Disposal Practices

12.1. Liquid waste.

12.1.1. Discard the excess sample from Step 9.1.4 into the acid waste system after results have been evaluated.

12.1.2. Discard the supernate from Step 9.1.14 to 9.1.16 into the acid waste system.

12.1.3. Discard the aqueous phases from Steps 9.2.3 and 9.2.5 into the acid waste system.

12.1.4. Collect the dodecane-DDCP solution in a plastic-coated glass container containing 200 mL of H_2O and label as organic waste. Seal the container with a stopper compatible with the solution that will release if pressure builds up in the bottle.

12.1.5. Discard the plating solution into the acid waste system.

12.2. Solid radioactive waste.

12.2.1. Sample planchets are stored for approximately one year. The planchets are then disposed of in the low-level radioactive waste according to SOP 2.

12.2.2. A waste profile for should be completed and forwarded to the EM-9 radioactive waste coordinator for each addition of waste to the container.

12.3. Biological waste.

12.3.1. Excess urine is disposed of using standard acid drain lines according to Standard Operating Procedure SOP4, "Handling Human Biological Fluids and Tissues."

12.3.2. After disposal, the sink should be washed with 4 L of diluted Clorox solution containing 50-60 mL of bleach and flushed with water.

12.3.3. The acid-rinsed urine specimen bottles should be rinsed with water and placed in the regular trash.

12.4. Waste pickup.

12.4.1. See AR 10-3 for general Laboratory policy on waste disposal.

12.4.2. Fill out the waste Profile Request Form (PRF) and send it to EM-8 along with all pertinent MSDS sheets. The form will be returned to the group waste management coordinator, who will return it to the waste generator.

12.4.3. After the PRF is returned signed off by EM-8 and with a reference number, fill out the Chemical Waste Disposal Request (CWDR) form. Send this form and the original PRF(s) to EM-7.

12.4.4. After the CWDR is returned call HS-1 to have an HP technician monitor and tag the container.

12.4.5. After the container has been tagged by the technician call EM-7 to arrange for pickup of the container.

13. Source Materials

13.1. I. K. Kressin, *Anal. Chem.* **49**, 842 (1977).

13.2. I. K. Kressin, W. D. Moss, E. E. Campbell, and H. F. Schulte, *Health Phys.* **28**, 41 (1975).

13.3. I. K. Kressin and G. R. Waterbury, *Anal. Chem.* **34**, 1598 (1962).

13.4. W. D. Moss, "HSE-5 Bioassay Section Quarterly Report," Los Alamos National Laboratory document, (July 1981).

13.5. J. F. McInroy, H. A. Boyd, B. C. Eutsler, and D. Romero, "Part IV: Preparation and Analysis of the Tissues and Bones," *Health Phys.* **49**, 587-621 (1985).

13.6. D. Knab, "Determination of Americium in Small Environmental Samples," *Anal. Chem.* **51**, 1095 (1979).

13.7. L.A. Currie, "Limits for Qualitative Detection and Quantitative Determination," *Anal. Chem.* **40**, 586-593 (1968).

13.8. L.A. Currie, "Lower Limit of Detection: Definition and Elaboration of a Proposed Position for Radiological Effluent and Environmental Measurements," U.S. Nuclear Regulatory Commission report NUREG/CR-4007 (September 1984).

13.9. "Chemical, Hazardous, and Mixed Waste", Administrative Requirement 10-3, in *Environmental Chemistry Group: Environment, Safety, and Health Manual*, Appendix V (most recent edition).

13.10. "Disposal of Solid Radioactive Waste from EM-9 Group Areas at TA-59, OH-1", SOP2, in *Environmental Chemistry Group: Environment, Safety, and Health Manual*, Appendix III (most recent edition).

13.11. "Handling and Disposal of Hazardous Materials", SOP3, in *Environmental Chemistry Group: Environment, Safety, and Health Manual*, Appendix III (most recent edition).

13.12. "Handling Human Biological Fluids and Tissues", SOP4, in *Environmental Chemistry Group: Environment, Safety, and Health Manual*, Appendix III (most recent edition).

Revisions or additions to the procedure are marked (▒▒▒▒). Where a section heading is marked, the entire section has been revised.

TABLE I. ENERGY SPECTRUM FOR ALPHA SPECTROMETER

Channel	Counts	Channel	Counts
60	0	86	18
61	2	87	22
62	1	88	11 *
63	1	89	8
64	1	90	2
65	2	91	6
66	3	92	2
67	6	93	5
68	7	94	1
69	17	95	2 *
70	14	96	4
71	8	97	4
72	10	98	11
73	14	99	11
74	26	100	9
75	25 *	101	20
76	32	102	22 —Peak ^{241}Am
77	44	103	18 (5.5 MeV)
78	63	104	11
79	85	105	9
80	108	106	8
81	102	107	4
82	125 —Peak ^{243}Am	108	4 *
83	94 (5.3 MeV)	109	3
84	63	110	1
85	29	111	0

* Counts are integrated 240 KeV to the left and 120 keV to the right of the energy peak.

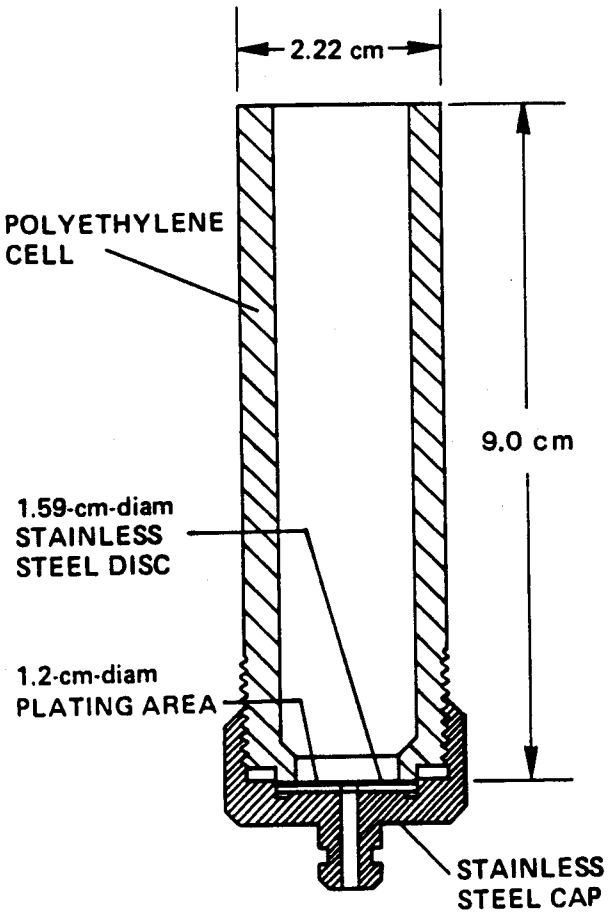

Fig. 1. Electrolytic cell.

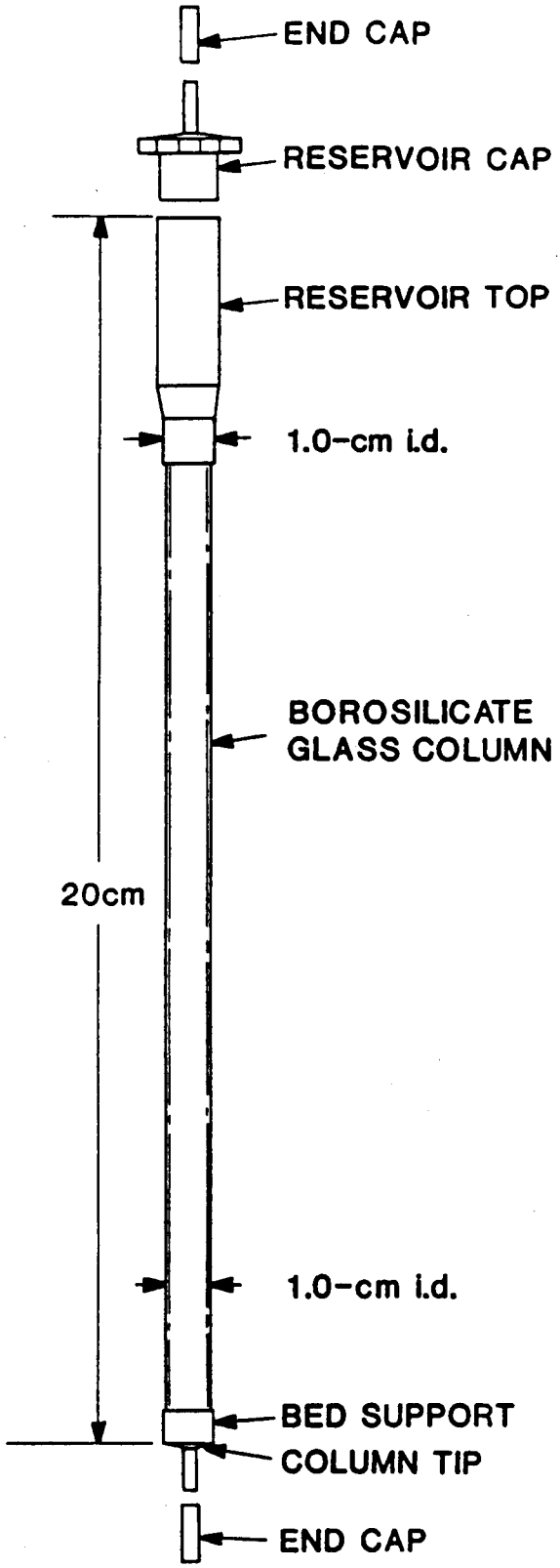

Fig. 2. Ion exchange column for americium.

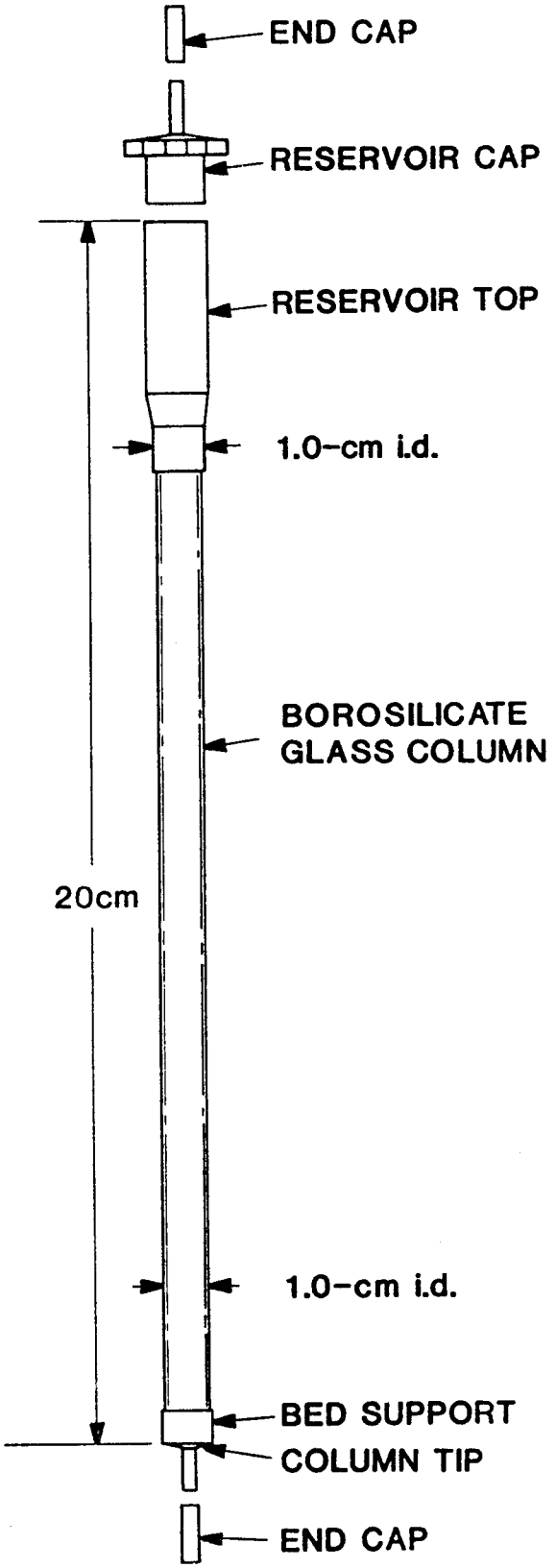

Fig. 3. Ion exchange column for americium.

AMERICIUM AND PLUTONIUM IN FECAL SAMPLES — A SCREENING PROCEDURE

Analytes: Americium, Plutonium	**Method No.:** R110
Matrix: Feces	**Accuracy and Precision:** ^{241}Am 140% ± 66% ^{239}Pu 170% ± 35%
Procedure: X-ray counting of 17- and 60 keV energies using a phoswich detector	**Minimum Detectable Activity:** ^{238}Pu 0.07 nCi ^{239}Pu 0.17 nCi ^{241}Am 0.02 nCi
	Acceptable Minimum Detectable Activity: None established
Effective Date: 09/16/81	**Authors:** George Brooks Daryl Knab Anthony J. Sanchez

SAFETY NOTE: Before beginning this procedure, read all of the Material Safety Data Sheets for the chemicals listed in Sec. 7. Read Sec. 4.3 of the EM-9 Safety Manual for information on personal protective clothing and equipment. Read Sec. 12 of this procedure for proper waste disposal practices.

1. Principle of Method

1.1. This procedure is used to screen fecal samples for significant concentrations of ^{241}Am, ^{238}Pu, and ^{239}Pu. The results are used to determine whether a chemical analysis is required to obtain a more accurate estimate of the concentration of the radionuclide.

1.2. The sample is transferred to a cardboard container and lightly compacted.

1.3. The sample is counted for 2,000 s using a phoswich detector to measure the 17- and 60-keV X-rays associated with the decay of ^{238,239}Pu and/or ^{241}Am.

1.4. A density factor for the sample is determined based on the transmission of the 81-keV gamma rays from a ^{133}Ba source placed on top of the container.

1.5. The concentration of the radionuclide of interest is calculated from the sample counts and the density factor.

2. Sensitivity

2.1. Sensitivity is determined by sample thickness, sample density, and by the counter background in the area of 17- and 60-keV X-rays.

2.2. For routine measurements with a 2,000-s counting period, a density factor of 1, and a sample thickness of 4 cm, the counting efficiencies for ^{238}Pu and ^{239}Pu 17-keV X-rays are 0.4% and 0.2% respectively. The counting efficiency for the ^{241}Am 60-keV X-ray, for samples with the same parameters, is 8.5%. This corresponds to a minimum detection limit (the 95th percentile of the background distribution) of 0.2 nCi for ^{238}Pu, 0.4 nCi for ^{239}Pu, and 0.01 nCi for ^{241}Am.

3. Accuracy and Precision

3.1. The accuracy and precision of this screening procedure were determined by chemical assay of fecal samples after their measurement by the phoswich detector.

3.1.1. Measurements by chemical analysis on ten samples of various thickness and density, containing between 0.1 and 2.1 nCi of ^{241}Am, showed an accuracy of 140% and a precision of 66%.

3.1.2. Similar measurements on seven samples containing ^{239}Pu, with concentrations of 0.1 to 18 nCi, gave an accuracy of 170% and a precision of 35%.

3.2. The data indicate that the method will overestimate the concentration of americium and plutonium in fecal samples.

3.3. The procedure does give positive indication of the presence of the radionuclides when the concentration is greater than the lower detection limits given in Step 2.2.

4. Interferences

4.1. Interference is caused by other gamma activity with an approximate energy of 17 or 60 keV.

4.2. Gamma and X-ray activity greater than 60 keV present in the sample and having Compton scatter not accounted for in the integration of the $^{238, 239}$Pu or ^{241}Am activity areas will also cause interference and reduced sensitivity.

5. Collection and Storage of Samples

5.1. Collect samples in plastic bags.

5.2. Store samples in cardboard cartons.

5.3. Freeze samples pending analysis.

6. Apparatus

6.1. Gamma spectrometer: equipped with a 256-channel analyzer.

6.2. Phoswich detector.

6.3. Cardboard cartons: 8.9 cm diameter by 9.5 cm high.

7. Reagents

7.1. None required.

8. Calibration and Standards

8.1. A ^{133}Ba, 81-keV gamma, standard source with an approximate concentration of 2 μCi is used to calculate the transmission factor for gamma rays through the fecal samples. This standard may be purchased from New England Nuclear, 549 Albany St., Boston, Massachusetts 02118.

8.2. An energy calibration is made with an ^{241}Am standard.

8.2.1. The analyzer is adjusted so that the 17- and 60-keV energy peaks of the ^{241}Am standard record in channels 30 and 120 respectively.

8.2.2. Samples known to contain ^{241}Am will indicate the 17-keV X-ray decay in channels 13-50 and the 60-keV X-ray decay in channels 80-160.

8.2.3. Samples known to contain only ^{238,239}Pu will indicate the 17-keV x-ray decay between channels 13 and 50.

8.3. The total counts in each of the spectrum areas of interest are integrated from the indicated channels.

Isotope	X-Ray	Channels	Peak
^{238,239}Pu	17 keV	13-50	30
^{241}Am	17 keV	13-50	30
	60 keV	80-160	120
^{133}Ba	81 keV	120-200	160

9. Procedure

9.1. Compact the sample in the cardboard container by lightly pressing the sample (contained within the plastic collection bag) downward with a plunger of the same diameter as the container.

9.2. Measure the sample thickness in centimeters and record on the work sheet (Fig. 1).

9.3. Submit the sample and work sheet to the count room for gamma counting.

9.4. Count room procedure.

9.4.1. Record all data on the work sheet.

9.4.2. Count a cardboard container with an empty plastic bag for 2000 s to determine the background.

9.4.3. Place the sample container on the phoswich detector and count for 2000 s.

9.4.4. Place the ^{133}Ba source on top of the sample container and count for 100 s.

9.5. Store the sample in a freezer or refrigerator for subsequent isotopic determinations.

10. Operation of the Instrument

10.1. Refer to count room procedure CR150 for gamma data reduction.

10.2. Examples of computer-generated spectra with ^{238}Pu, ^{239}Pu, ^{241}Am, and ^{238}Pu together with ^{241}Am are shown in Figs. 2 and 3.

11. Calculations

11.1. The work sheet contains the data needed to calculate the estimated concentration of either ^{238,239}Pu and/or ^{241}Am, depending on the exposure information received regarding the sample.

11.2. Plutonium-238 and plutonium-239 cannot be discriminated from each other because they both decay with production of the 17-keV X-ray. If the isotopes of plutonium involved in the exposure are unknown, report the estimates of both isotopes on the reporting form.

11.3. If the sample contains both Pu and ^{241}Am, the contribution of total 17-keV counts from Pu can be estimated from the sample thickness versus the expected ratio of 17- to 60-keV X-rays from ^{241}Am only.

11.4. Decay the ^{133}Ba standard and record the value on the work sheet.

$$A_t = A_o e^{-\ln 2/T_{1/2}} ,$$

where A_t = the activity at desired time,
A_o = the activity at original time,
e = the base of natural logarithms,
ln 2 = logarithm of 2 (0.69315), and
$T_{1/2}$ = the half-life of ^{133}Ba (10.66 years).

11.5. Calculations if only ^{238}Pu or ^{239}Pu is present.

11.5.1. Record all data on the work sheet.

11.5.2. Calculate the transmission factor.

$$TF = \frac{\left(\frac{C_g}{T}\right) \times 60}{Ba} ,$$

where TF = transmission factor,
C_g = gross counts of ^{133}Ba*,
T = count length in seconds (100 s),
60 = factor to convert count times to minutes, and
Ba = decayed concentration of ^{133}Ba in disintegrations per minute (dpm) from Step 11.4.

* The background in the ^{133}Ba area is insignificant.

11.5.3. Read the density estimation from Fig. 4 using sample thickness and the transmission factor.

11.5.4. Using sample thickness and density, read the counting efficiency for ^{238}Pu from Fig. 5 and for ^{239}Pu from Fig. 6.

11.5.5. Calculate the estimated concentration due to ^{238}Pu or ^{239}Pu.

$$\text{nCi/sample} = \frac{(C_g - C_b) \times 60}{T \times E \times K} ,$$

where C_g = gross sample counts (17 keV),
C_b = gross background counts (17 keV),
T = count length in seconds (2000 s),
E = counting efficiency from Step 11.5.4,
K = factor to convert dpm to nCi (2220), and
60 = factor to convert count times to minutes.

11.6. Calculations if only ^{241}Am is present.

11.6.1. Record all data on the work sheet.

11.6.2. Calculate the transmission factor using the equation in Step 11.5.2.

11.6.3. Read the density estimation from Fig. 4 using sample thickness and the transmission factor.

11.6.4. Using sample thickness and density, read the counting efficiency for ^{241}Am from Fig. 7. The background in the ^{133}Ba area is insignificant.

11.6.5. Calculate the estimated concentration due to ^{241}Am.

$$\text{nCi/sample} = \frac{(C_g - C_b) \times 60}{T \times E \times K} ,$$

where C_g = gross sample counts (60 keV),
C_b = gross background counts (60 keV),
60 = factor to convert count times to minutes,
T = count length in seconds (2000 s),
E = counting efficiency from Step 11.6.4, and
K = factor to convert dpm to nCi (2220).

11.7. Calculations if ^{241}Am and plutonium are both present.

11.7.1. Record all data on the work sheet.

11.7.2. Calculate the transmission factor using the equation in Step 11.5.2.

11.7.3. Read the density estimation from Fig. 4 using sample thickness and the transmission factor.

11.7.4. Read the ratio factor of ^{241}Am 17 keV/60 keV as a function of sample thickness and density from Fig. 8.

11.7.5. Using sample thickness and density, read the counting efficiency for ^{241}Am from Fig. 7, for ^{238}Pu from Fig. 5, and for ^{239}Pu from Fig. 6.

11.7.6. Net counts above background in the 60-keV area times the ratio factor equals the number of counts above background expected in the 17-keV area to be due to the ^{241}Am.

11.7.6.1. Calculate the estimated counts due to ^{241}Am in the 17-keV area.

$$^{241}\text{Am cpm in 17-keV area} = \frac{(C_g - C_b) \times RF \times 60}{T} ,$$

where C_g = gross sample counts in 60-keV area,
C_b = background counts in 60-keV area,
RF = ratio factor from Fig. 8,
60 = factor to convert count times to minutes, and
T = time in seconds (2000 s).

11.7.7. Net counts above background in the 17-keV area minus the counts due to the ^{241}Am in the 17-keV area gives the counts due to the plutonium.

11.7.7.1. Calculate the estimated counts due to plutonium in the 17-keV area.

$$\text{Pu cpm in 17-keV area} = \frac{(C_g - C_b) \times 60}{T} - Am ,$$

where C_g = gross sample counts in 17-keV area,
C_b = background counts in 17-keV area,
60 = factor to convert count times to minutes,
T = time in seconds (2000s), and
Am = cpm in 17-keV area due to ^{241}Am from Step 11.7.6.1.

11.7.8. Calculate the estimated concentration due to ^{241}Am using the equation in Step 11.6.5 and the efficiency from Step 11.7.5.

11.7.9. Calculate the estimated concentration of ^{238}Pu and/or ^{239}Pu.

$$\text{nCi/sample} = \frac{C_n}{E \times K} ,$$

where C_n = net cpm due to Pu in the 17-keV area from Step 11.7.7.1,
E = counting efficiency from Step 11.7.5, and
K = factor to convert dpm to nCi (2220).

12. Proper Waste Disposal Practices

12.1. No waste is generated by this procedure.

13. Source Material

13.1. H. M. Ide, W. D. Moss, M. A. Gautier, and G. D. DuBois, "Estimation of Americium and Plutonium in Raw Fecal Samples Using a Phoswich Detector - A Screening Method," Los Alamos National Laboratory, unpublished data, 1983.

Revisions or additions to procedure marked with redline (▒▒▒▒▒▒▒▒▒▒▒▒▒▒▒▒). Where a section heading is marked, the entire section has been revised.

Name_____ Date Counted_____

Z Number_____ Group_____ Date Reported_____

Sample Type_____ Log No _____ Phone_____

Sample Date_____ Memo_____

Data Recorded in Notebook_____ Page_____

SAMPLE-COUNTING INFORMATION

Count Length 2000 s _____ *^{133}Ba Activity_____ dis/min

Gross Counts 17 keV _____ Sample Thickness_____ cm

Gross Counts 60 keV _____ Count Length 100 s _____

BKG Counts 17 keV _____ Gross Counts ^{133}Ba _____

BKG Counts 60 keV _____

Transmission Factor _____

Density Estimation _____

Counting Eff. for 60 keV ^{241}Am _____

Counting Eff. for 17 keV ^{238}Pu _____

Counting Eff. for 17 keV ^{239}Pu _____

Ratio Factor of ^{241}Am 17 keV/60 keV _____

Net cpm of ^{241}Am in 17 keV Area _____

Net cpm of Pu in 17 keV Area _____

Estimated Concentration Due to ^{241}Am_____ nCi

Estimated Concentration Due to ^{238}Pu _____ nCi

Estimated Concentration Due to ^{239}Pu _____ nCi

---

*Standard decayed to date of counting

Fig. 1. Work sheet for data recording.

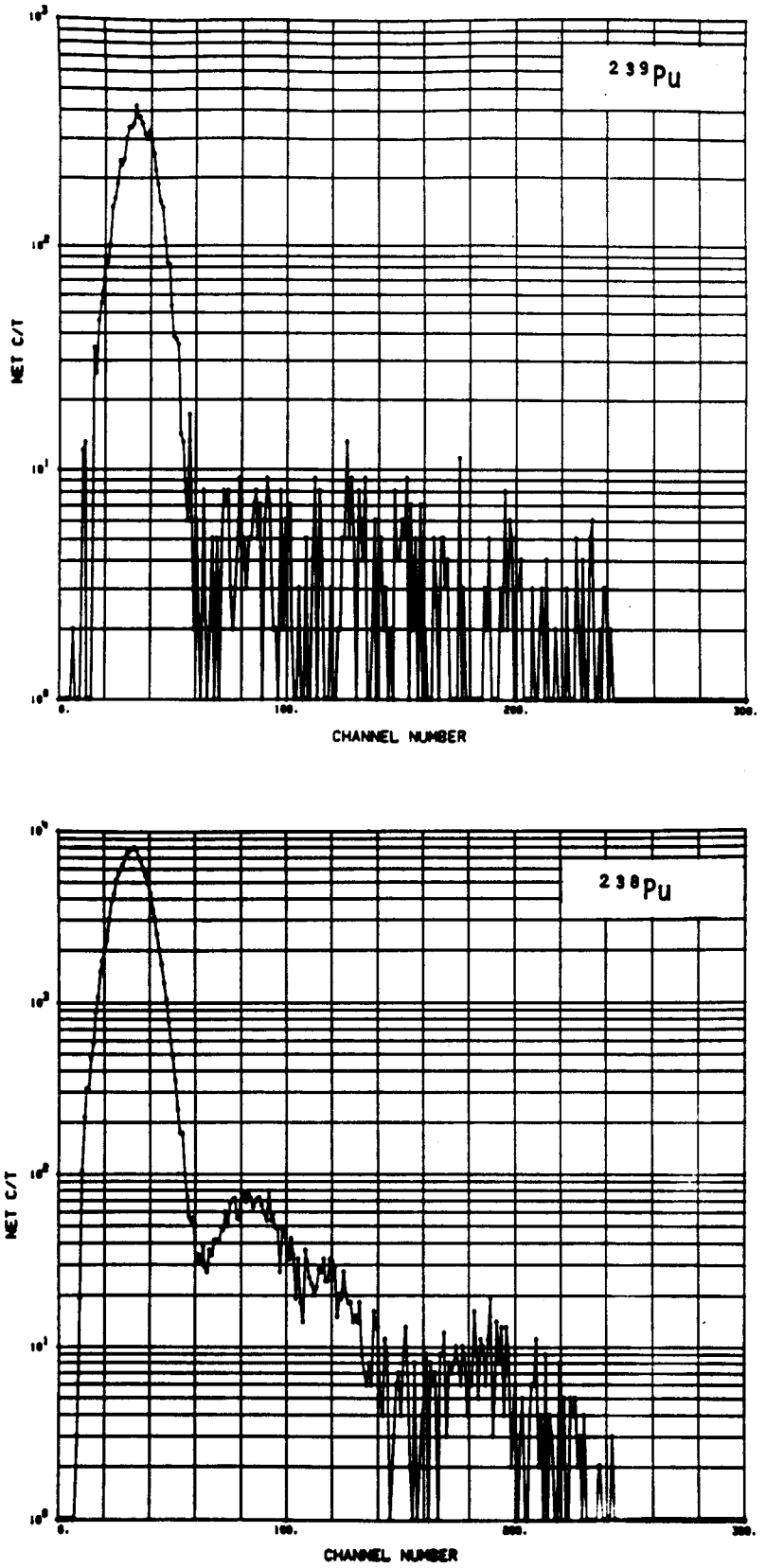

Fig. 2. Computer-generated spectra of ^{238}Pu and ^{239}Pu.

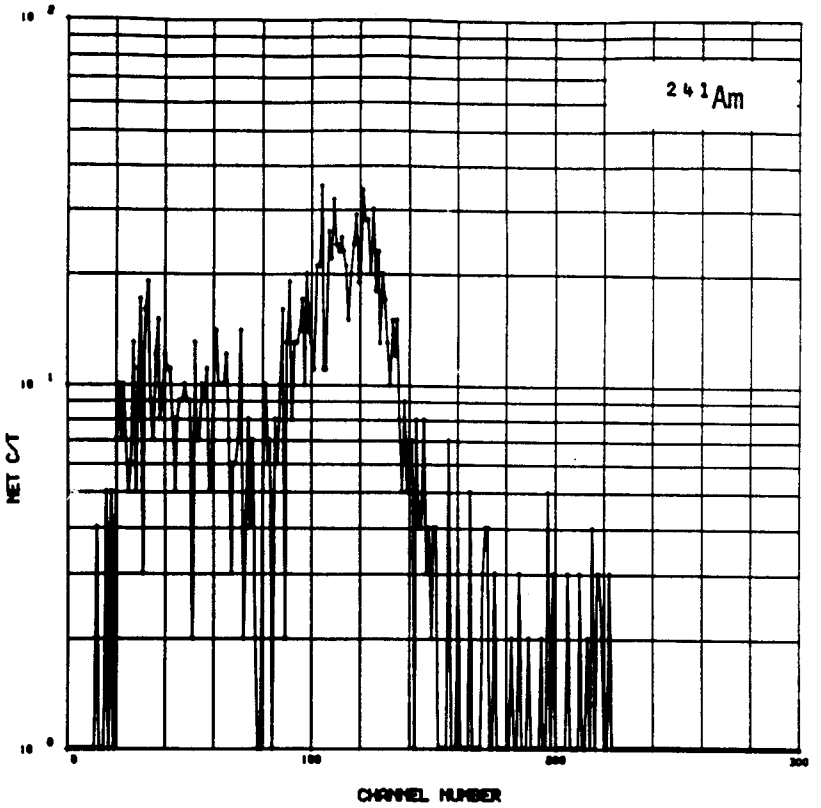

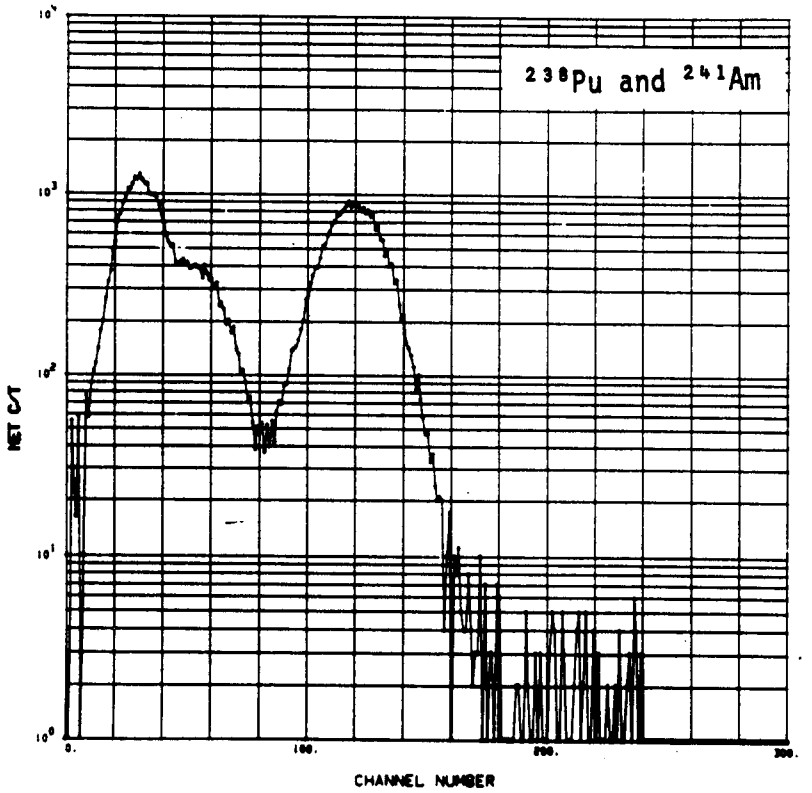

Fig. 3. Computer-generated spectra of ^{241}Am and ^{238}Pu together with ^{241}Am.

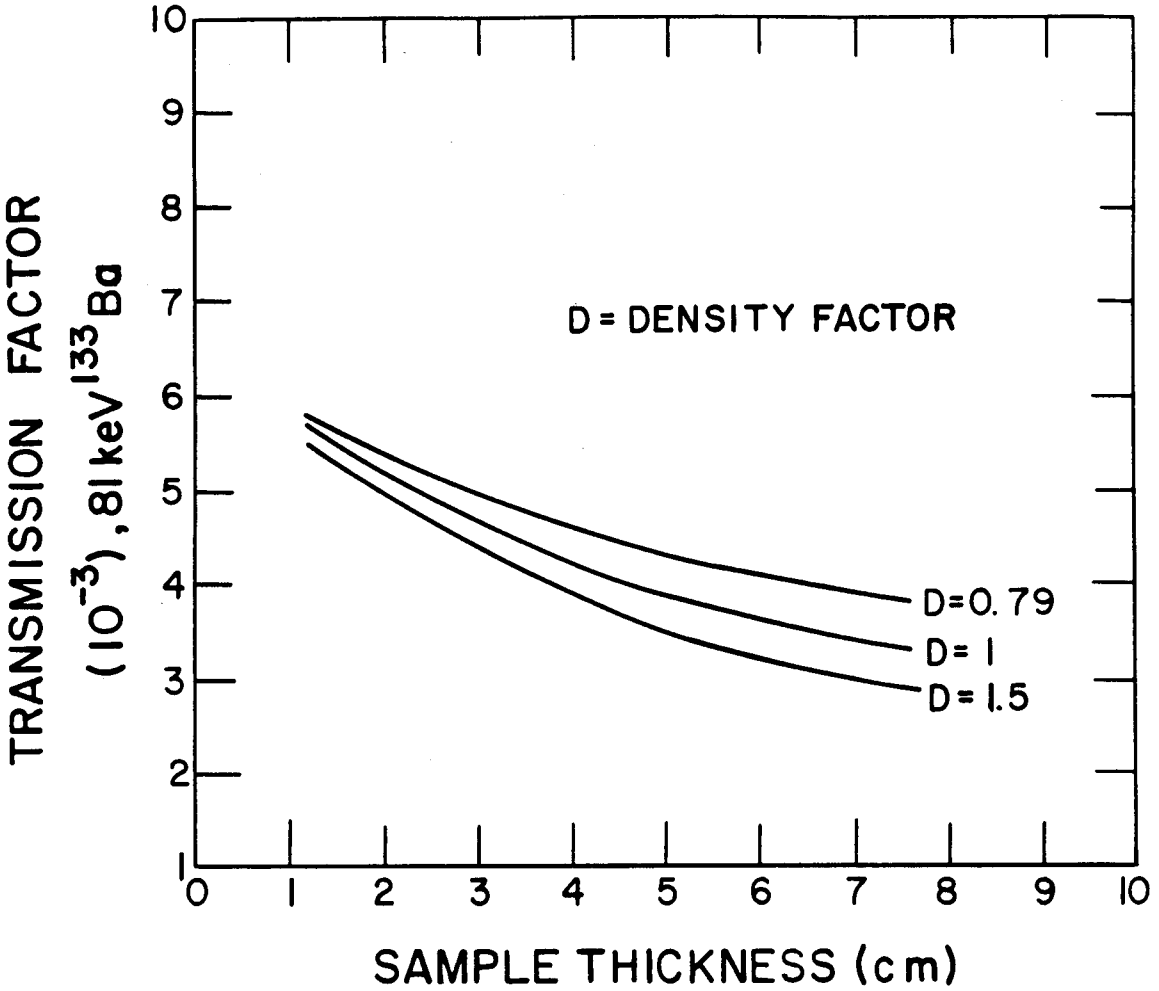

Fig. 4. Density determination curve.

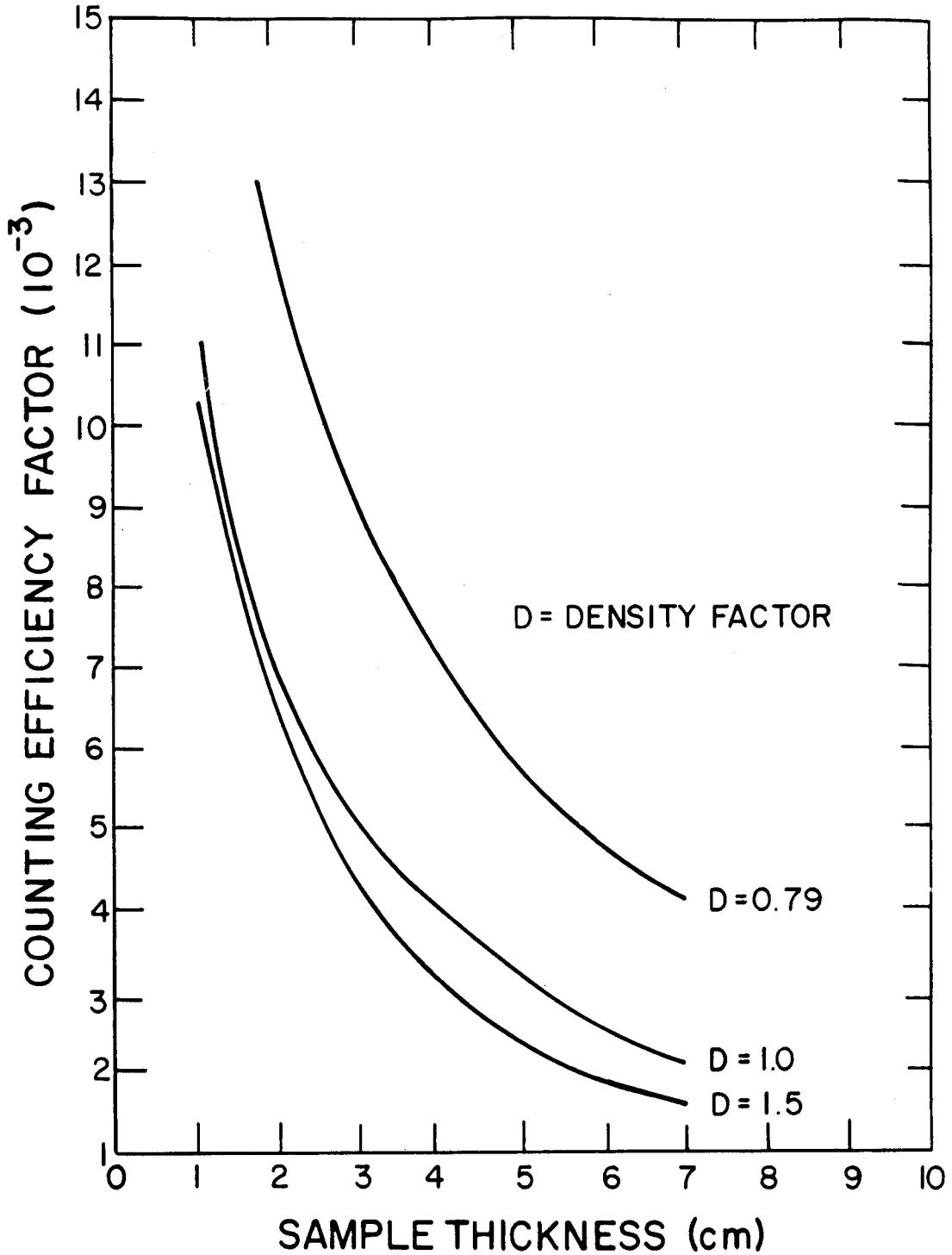

Fig. 5. Counting efficiency curve for ^{238}Pu.

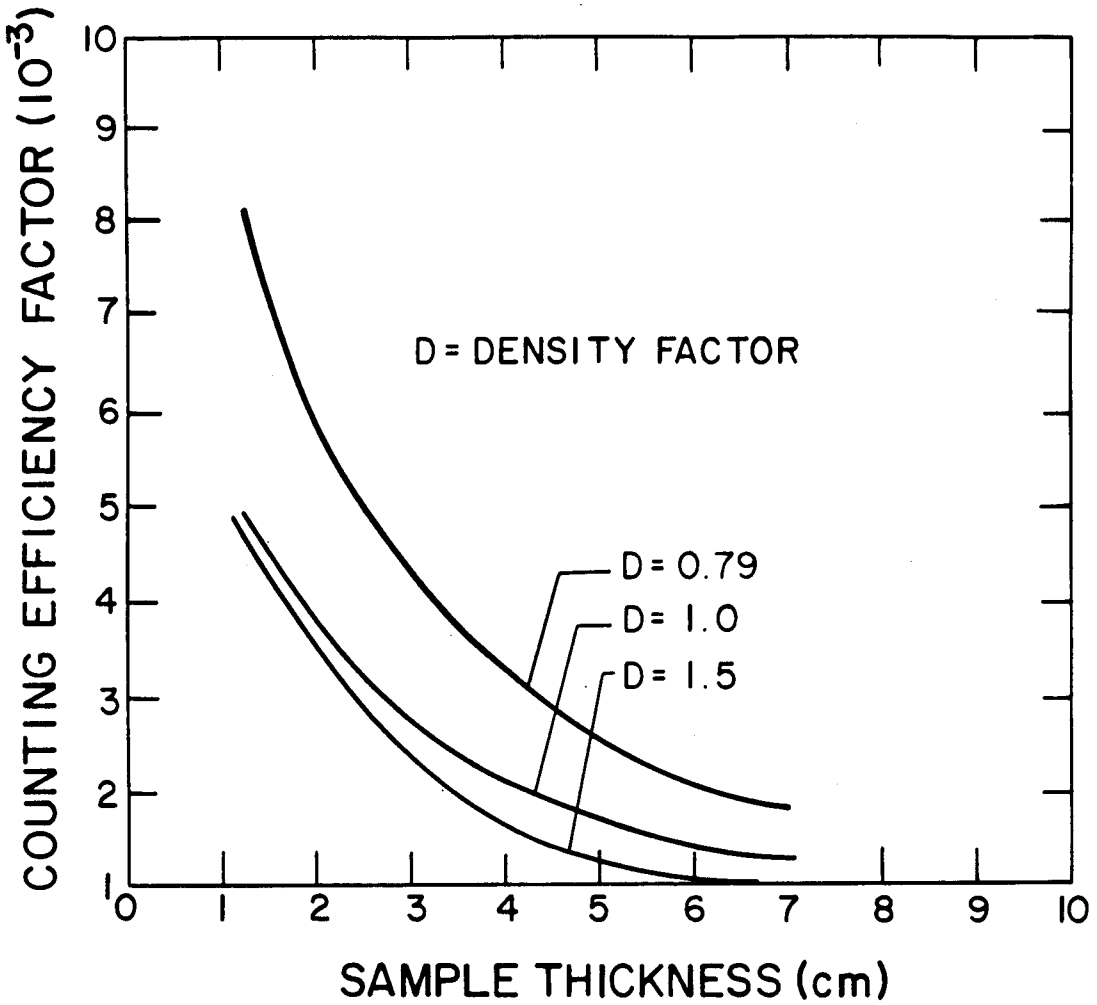

Fig. 6. Counting efficiency curve for ^{239}Pu.

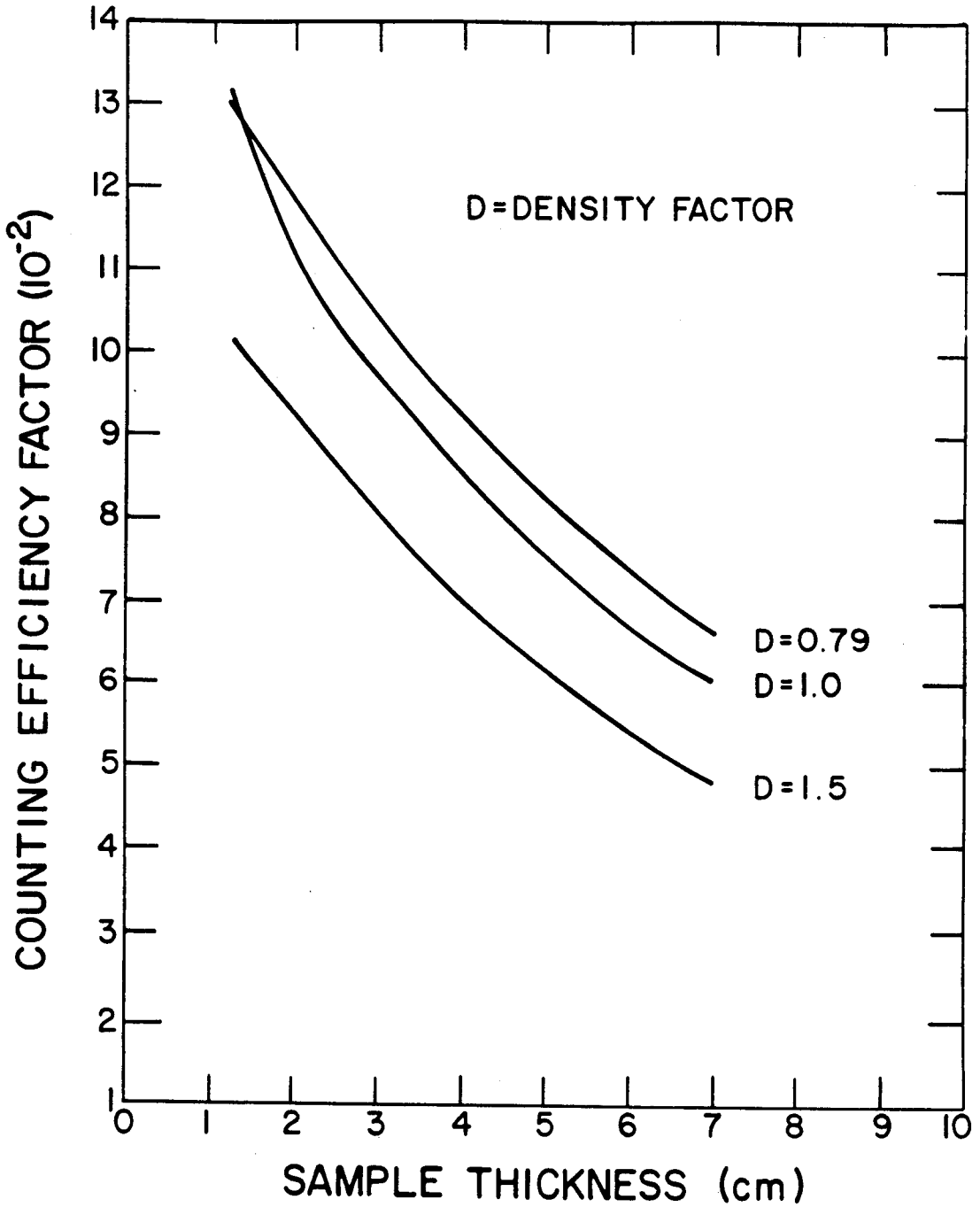

Fig. 7. Counting efficiency curve for ^{241}Am.

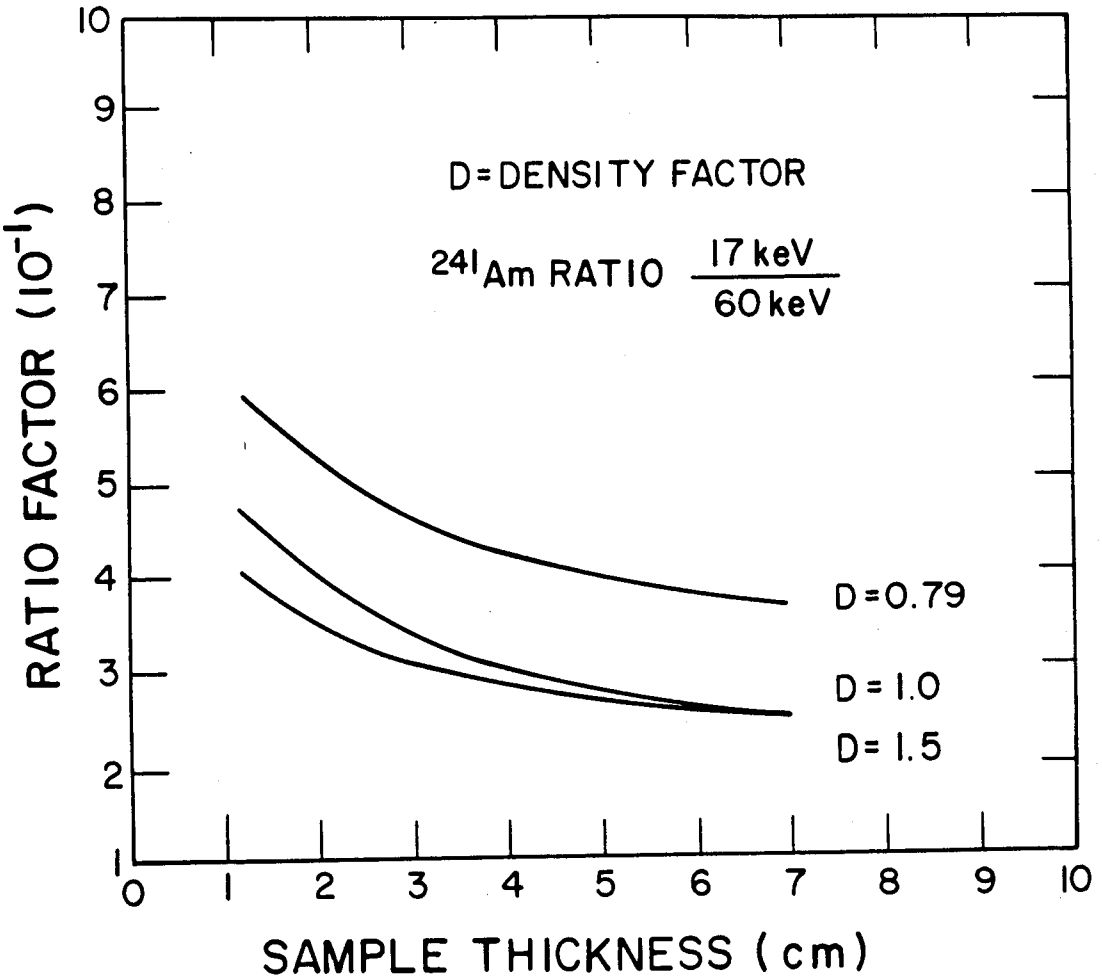

Fig. 8. Curve to determine the ^{241}Am 17-keV/60-keV ratio.

CESIUM-137 IN URINE

Analyte: Cesium-137	**Method No:** R120
Matrix: Urine **Author:** Harold M. Ide	**Accuracy and Precision:** 98% ± 6% (mean ± 1 sigma) at the 100-pCi level
Minimum Detectable Activity: 100 pCi/L	**Acceptable Minimum Detectable Activity:** 1000 pCi/L
Procedure: Gamma Spectrometry	**Effective Date:** 05/01/65 to 01/01/89

1. Principle of Method

1.1. One liter of urine is transferred to a 2-liter Marinelli beaker.

1.2. The beaker is placed on a 4- by 4-inch NaI detector and counted for 2000 seconds.

1.3. The data are collected on a multichannel analyzer utilizing 256 channels of data storage.

1.4. The net counts integrated in channels 74 to 95 are used for the ^{137}Cs calculation.

2. Sensitivity

2.1. Sensitivity is limited by the counter background.

2.2. For routine measurements with a 2,000-second (33.33-minute) counting period and a counting efficiency of 8%, the minimum detection limit (the 95th percentile of the background distribution) is 100 pCi/L.

3. Accuracy and Precision

3.1. Average recovery of the ^{137}Cs standard is equal to 98% ± 6% at the 100-pCi concentration level.

4. Interferences

4.1. Interference is caused by other gamma activity with an approximate energy of 661 keV.

4.2. Other gamma activities present, whose energy is greater than 661 keV and whose Compton scatter is not accounted for in the integration of the area in channels 74 to 95, also cause interference.

5. Collection and Storage of Samples

5.1. Equivalent 24-hour samples, two morning and two evening voidings, are collected in specimen bottles. The volume analyzed for routine measurements is 1000 cm^3.

5.2. Refrigerate samples pending analysis.

6. Apparatus

6.1. Gamma spectrometer: equipped with a 256-channel analyzer.

6.2. NaI detector: 4- by 4-inch.

6.3. Marinelli beaker: with a 4-inch well capable of containing 2 liters of sample.

7. Reagents

7.1. None required.

8. Calibration and Standards

8.1. A Marinelli beaker containing the isotopes of ^{137}Cs and ^{60}Co is used for energy calibration. The ^{137}Cs and ^{60}Co standards may be purchased from New England Nuclear, 549 Albany St., Boston, Massachusetts 02118.

8.1.1. The calibration is set at 7.813 keV per channel.

8.1.2. The ^{137}Cs photopeak will register in channel 48.

8.1.3. The two photopeaks of ^{60}Co register in channels 150 and 170.

8.2. Preparation of the calibration curve in blank urine.

8.2.1. Use one liter of blank urine to determine the background counts.

8.2.2. Prepare a ^{137}Cs standard curve in one liter of urine in concentrations from 100-500 pCi/L.

8.2.3. Count each sample for 2000 seconds in a Marinelli beaker.

9. Procedure

9.1. Transfer a one-liter urine sample to a Marinelli beaker.

9.2. Place the beaker on a 4- by 4-inch NaI detector and count for 2000 seconds.

9.3. Determine the gross activity of ^{137}Cs by gamma spectrometry.

10. Operation of the Gamma Spectrometer

10.1. Refer to the operating manual for the gamma spectrometer.

11. Calculations

11.1. The counts are determined for each standard by integrating the counts in channels 74 to 95.

11.2. Plot the standard curve using linear graph paper with integrated counts on the y-axis and concentration of ^{137}Cs on the x-axis.

11.3. Determine the concentration of ^{137}Cs in the samples from the standard curve.

GROSS BETA ACTIVITY

Analyte: Beta-Emitting Nuclides	**Method No:** R130
Matrix: Urine, Water	**Accuracy and Precision:** 70% ± 5% (mean ± 1 sigma) at the 10-pCi level
Contact Person: William D. Moss	
Minimum Detectable Activity: 25 pCi/L	**Acceptable Minimum Detectable Activity:** 25 pCi/L
Procedure: Oxalate Coprecipitation and Beta Counting	**Effective Date:** 01/01/74 to 01/01/89

1. Principle of Method

1.1. Beta-emitting material is coprecipitated with calcium from a urine specimen as calcium oxalate, using ammonium oxalate in an acid medium.

1.2. The washed precipitate is vacuum-filtered through a glass fiber filter and the beta activity counted on a low-background, methane flow proportional counter.

2. Sensitivity

2.1. The detection limit is usually 1 dis/s/1000 cm^3 of urine. High background levels in the Beckman Wide Beta Counter may raise the levels to 2 dis/s.

3. Accuracy and Precision

3.1. Samples spiked with ^{90}Sr at a level of 20 dis/s gave a mean recovery of 70% ± 5% at the 10-pCi concentration level.

4. Collection and Storage of Samples

4.1. Equivalent 24-hour samples are collected in glass specimen bottles.

4.2. Refrigerate samples pending analysis.

5. Apparatus

5.1. Graduated cylinders: 1000-cm^3.

5.2. Centrifuge tubes: 90-cm^3, round bottom, Pyrex.

5.3. Aluminum heating block: capable of holding sixteen 90-cm^3 centrifuge tubes.

5.4. Hot plate: to hold aluminum heating block.

5.5. Glass fiber filter paper: 5.08-cm-diameter circles, Type E, Gelman Instrument Co., Ann Arbor, Michigan.

5.6. Millipore filter assembly: Millipore Corp., Bedford, Mass.

5.7. Beckman Wide Beta II Counter.

6. Reagents

6.1. Ammonium hydroxide (concentrated 28%, specific gravity 0.90).

6.2. Ammonium hydroxide (0.05%). Add 1 cm^3 concentrated NH_4OH to 500 cm^3 distilled water and mix.

6.3. Ammonium oxalate.

6.4. Glacial acetic acid (97%, specific gravity 1.049).

6.5. Methane (Phillips Pure Grade, 99% Mol Minimum): Phillips Petroleum Co., Special Products Division, Bartlesville, Oklahoma.

6.6. 1-Octanol (Eastman, practical-grade).

6.7. Oxalic acid.

6.8. Sulkowitch reagent. Place 25.0 g oxalic acid and 25.0 g ammonium oxalate in a 1000-cm^3, glass-stoppered, graduated cylinder. Add 50 cm^3 glacial acetic acid and 500 cm^3 distilled water. Stir until dissolved. Cool and dilute to 750 cm^3 with distilled water. Mix well and filter. (This is double the strength of standard Sulkowitch reagent to minimize the volume of liquid in the analysis.)

7. Calibration and Standards

7.1. The primary ^{90}Sr standard may be purchased from New England Nuclear, 549 Albany St., Boston, Massachusetts 02118.

7.2. The primary solution is made by diluting a 1-mCi standard solution of ^{90}Sr to 1000 cm^3 with distilled water. This solution is standardized in a calibrated beta counter by counting disks containing 0.1 cm^3 of the stock solution.

7.3. If the primary solution is greater than 1000 pCi/cm^3, a dilution of this solution should be made to keep the concentration less than 1000 pCi/cm^3.

7.4. Urine standards are prepared by adding the required amount of standard solution to blank urine samples.

7.5. Standards and reagent blanks are processed through the entire analytical procedure.

8. Procedure

8.1. Pool each urine sample in a 1000-cm^3 graduated cylinder.

8.2. Record the temperature and specific gravity.

8.3. Place 75 cm^3 of the pooled sample in a 90-cm^3, round bottom centrifuge tube.

8.4. Heat at 70 to 80°C in an aluminum block for 15 to 20 minutes. Do not add boiling chips.

8.5. Add dropwise, with vigorous stirring, 10 cm^3 of Sulkowitch reagent. Add a drop of octyl alcohol if the urine should effervesce uncontrollably.

8.6. Digest the sample for 60 min or until the precipitate is no longer gelatinous.

8.7. Cool and centrifuge for 20 min at 1500 rpm.

8.8. Place a 5.08-cm^3-diameter glass fiber filter on the base of a millipore filter funnel and turn on the vacuum.

8.9. Decant and discard the supernate.

8.10. Wash the precipitate onto the filter with 25 cm^3 of 0.05% NH_4OH by forcibly squirting the reagent in a fine stream from a wash bottle to stir up the precipitate. Transfer the precipitate to the filter. Repeat the washing until the transfer is completed.

8.11. Wash down the walls of the funnel with a few drops of 0.05% NH_4OH.

8.12. Remove the funnel with the vacuum still on.

8.13. Release the vacuum. Carefully transfer the filter to a drying oven with a flat tweezer and dry for several hours at 100°C.

8.14. Place the filter on the counting planchets and submit for measurement of beta activity.

9. Operation of the Beta Counter

9.1. Low-level beta emissions are counted on a methane flow proportional counter.

9.2. The gross counting data must be corrected for counter background and efficiency.

9.2.1. Counter background is determined by counting a blank plate before and after each sample.

9.2.2. Efficiency is determined daily from a New England Nuclear ^{210}Bi standard of known activity.

9.3. Blanks, standards, and samples are placed in counting planchets.

9.4. Sample area and mass must be reproducible. Holders for samples, blanks, and standards must be identical.

9.5. Refer to the operating manual for the Wide Beta II gas flow proportional counter for complete instructions.

10. Determination of the High-Voltage Operating Point of the Beta Counter

10.1. Adjust the gas flow and turn on the counter.

CAUTION: Never operate the counter unless adequate gas is flowing through the chamber. No count is valid if pressure in the methane tank is less than 500 lbs.

10.2. Position the standard plate in the counting chamber.

10.3. Adjust the high-voltage control back to a point at which the voltage is too low for the counter to function.

10.4. Raise the voltage slowly until the scaler registers approximately 100 counts/minute.

10.5. Raise the voltage in increments of 50 volts, recording the counts/minute at each stop.

10.6. Plot counts per minute versus high voltage.

10.7. Set the high voltage to operate at a point just above the knee of the plateau.

11. Determination of Counter Efficiency

11.1. Replace the standard plate with the blank plate.

11.2. Flush the chamber by counting the newly inserted plate for 2 minutes. Do not record the count.

NOTE: Always flush the chamber for 2 minutes after changing plates.

11.3. Count the blank for 10 minutes. Calculate the counts/minute.

11.4. Repeat the 10-minute blank counts until 3 successive counts agree within ± 0.5 counts/minutes.

11.5. Count the standard for 10 minutes. Calculate the counts/minute.

11.6. Count the background plate again. Average the before and after background counts/minute. Subtract this average count from the standard counts/minute to obtain the net standard counts/minute.

11.7. Divide the net standard counts/minute by the known count of the standard to obtain the counter efficiency, which should be 0.50.

11.8. The average chemical recovery of the control samples is 0.8.

12. Calculations

12.1. The beta activity is determined using the following formula.

$$pCi/L = \frac{C_s - C_b \times 1000}{T \times V \times E \times R \times K}$$

where C_s = sample counts
C_b = background counts
T = time in minutes (50)
V = volume in cm^3 of aliquot analyzed
E = efficiency of the counter
R = average chemical recovery of control samples (0.8)
K = 2.22 (to convert dis/min to pCi)

13. Source Materials

13.1. C. A. Mawson and I. Fischer, "The Estimation of Radioactive Strontium and Other Fission Products in Urine and Water," National Research Council of Canada, Research Division, Chalk River, Ontario, Canada, report CRM-455 (1950).

13.2. Manual of Standard Procedures, Health and Safety Laboratory USAEC, New York Operations Office report NYO-4700 (March 1957).

PHOSPHORUS-32 IN URINE

Analyte: Phosphorus-32	**Method No:** R150
Matrix: Urine	**Accuracy and Precision:** 100% ± 15% (mean ± 1 sigma) at the 10-pCi level
Author: Ivan K. Kressin	
Minimum Detectable Activity: 40 pCi/L	**Acceptable Minimum Detectable Activity:** 40 pCi/L
Procedure: Coprecipitation and Liquid Scintillation Spectrometry	**Effective Date:** 07/01/75 to 01/01/89

1. Principle of Method

1.1. The organic material in the urine is oxidized with H_2O_2.

1.2. The phosphorus is separated from the urine by precipitation as magnesium ammonium phosphate.

1.3. The precipitate is dissolved in 4 M HCl and reprecipitated.

1.4. The precipitate is washed, dissolved in 4 M HCl, mixed with scintillation solution, and counted in a liquid scintillation spectrometer.

1.5. Phosphorus-32 decays by beta emission with an energy of 1.71 MeV.

2. Sensitivity

2.1. Sensitivity is limited by the counter background.

2.2. For routine measurements with a 100-minute counting period and a counting efficiency of 100%, the minimum detection limit (the 95th percentile of the background distribution) is 8.0 pCi per 200-cm^3 sample.

3. Accuracy and Precision

3.1. Average recovery of ^{32}P at the 10-pCi level is 100% ± 15%.

4. Interferences

4.1. The yellow coloration from urine will quench the scintillation counting of phosphorus-32. Two precipitations of magnesium ammonium phosphate will normally remove all organic residue and the color-quenching interference.

5. Collection and Storage of Samples

5.1. Collect samples in 450-cm^3 glass containers. Acidify the sample on receipt to approximately 1 M with HCl.

5.2. Because ^{32}P has a half-life of 14.3 days, samples must be analyzed as soon as possible after receiving them.

6. Apparatus

6.1. Liquid scintillation counter: Packard, Model 3320.

6.2. Stirring hot plates.

6.3. Beakers: 400-cm^3.

6.4. Fluted funnels: 70-mm.

6.5. Centrifuge tubes: 100-cm^3, round bottom.

6.6. Filter paper: Whatman No. 2, 11-cm.

6.7. Clinical centrifuge: with head for 100-cm^3 centrifuge tubes.

6.8. Rack: to hold fluted funnels.

6.9. Stirring bars: Teflon-coated, 3/4- and 1-inch.

6.10. Polyethylene wash bottle: 250-cm^3.

6.11. Scintillation vials: 25-cm^3.

7. Reagents

7.1. Hydrogen peroxide (30%).

7.2. Hydrochloric acid (concentrated 37%, specific gravity 1.18).

7.3. Magnesia mixture. Mix 50 g $MgCl \cdot 6\ H_2O$ and 100 g NH_4Cl in 250 cm^3 H_2O. Add 3-5 drops concentrated HCl and dilute to 500 cm^3 with H_2O.

7.4. Citric acid solution. Dilute 50 g citric acid to 100 cm^3 with H_2O.

7.5. Ammonium hydroxide (concentrated 28-30%).

7.6. Hydrochloric acid (4 M). Dilute 350 cm^3 concentrated HCl to 1000 cm^3 with H_2O.

7.7. Ammonium hydroxide solution (1%). Dilute concentrated NH_4OH with H_2O to give a 1% solution.

7.8. Scintillation solution. Aquasol-2 or other similar commercial product.

8. Calibration and Standards

8.1. The primary ^{32}P standard may be purchased from New England Nuclear, 549 Albany St., Boston, Massachusetts 02118.

8.2. The primary solution is made by diluting a 1-mCi standard solution of ^{32}P to 1000 cm^3 with distilled water. This solution is standardized in a calibrated liquid scintillation counter by counting 0.1 cm^3 of the stock solution in 10 cm^3 of scintillation solution. Because the half-life for ^{32}P is 14.3 days, all standards are corrected for decay before each use.

8.3. If the primary solution is greater than 1000 pCi/cm^3, a dilution should be made to keep the concentration less than 1000 pCi/cm^3.

8.4. Urine standards are prepared by adding the required amount of standard solution to blank urine samples.

8.5. Standards and reagent blanks are processed through the entire analytical procedure.

9. Procedure

9.1. Mix the urine sample and pour 200 cm^3 into a 400-cm^3 beaker. If the sample aliquot contains appreciable solids, add concentrated HCl to obtain a relatively clear solution.

9.2. Add 10 cm^3 of magnesia mixture and 2 cm^3 of citric acid solution.

9.3. Add concentrated NH_4OH until a precipitate forms. Add an additional 10 cm^3.

9.4. Add 10 cm^3 of 30% H_2O_2.

9.5. Stir the solution for 10 minutes on a magnetic stirrer and allow to stand for 30 minutes.

9.6. Carefully decant the supernatant solution from the beaker, making sure that none of the precipitate carries with the supernate.

9.7. Prepare a filter funnel with an 11-cm, No. 2 Whatman filter paper. Rinse the funnel and filter paper twice with a minimum amount of 1% NH_4OH solution.

9.8. Transfer the precipitate from the beaker to the filter paper. Wash all of the precipitate from the beaker to the filter paper with 1% NH_4OH solution.

9.9. Rinse the beaker with 4 M HCl solution and set aside until Step 9.12.

9.10. Wash the filter paper five times with 1% NH_4OH solution, letting the paper drain between each wash.

9.11. Place the funnel in a 100-cm^3 centrifuge tube.

9.12. Pour the 4 M HCl from the beaker in Step 9.9. into the filter funnel.

9.13. Rinse the beaker one additional time with 4 M HCl and add the rinse to the funnel. Let the funnel drain.

9.14. If there is a precipitate in the filter paper, direct a stream of 4 M HCl from the wash bottle onto the precipitate to dissolve all of the precipitate.

9.15. Rinse the filter paper five times with 4 M HCl, letting the funnel drain completely between each rinse.

9.16. Remove the funnel from the centrifuge tube and add a 3/4-inch Teflon-coated stirring bar to the tube.

9.17. Stir the solution in the tube and continue stirring through Steps 9.18. and 9.19.

9.18. Add 1 cm^3 of magnesia mixture, 1 cm^3 of 30% H_2O_2, and 1 cm^3 of citric acid solution to the centrifuge tube.

9.19. From a polyethylene wash bottle, slowly add concentrated NH_4OH until a precipitate permanently remains. Add 10 cm^3 in excess.

9.20. Remove the stirring bar and let the solution stand for 30 minutes or until the solution has attained ambient temperature.

9.21. Centrifuge for 5-10 minutes. Carefully decant and discard the supernatant solution.

9.22. Rinse the inside walls of the centrifuge tube with 1% NH_4OH solution. Swirl the tube to mix the precipitate.

9.23. Centrifuge the tube for 5-10 minutes.

9.24. Carefully decant the supernatant solution, letting all of the solution drain out of the tube. If the solution is yellow, repeat Steps 9.16. through 9.24.

9.25. Add 3 cm^3 of 4 M HCl to the tube and shake to dissolve the precipitate.

9.26. Add 10 cm^3 of scintillation solution to a scintillation vial.

9.27. Pour the HCl solution from the centrifuge tube into the scintillation vial. Rinse the centrifuge tube three times with 1 cm^3 of 4 M HCl. Cap the vial and mix the solution thoroughly.

9.28. Prepare 3 blanks by adding 10 cm^3 of scintillation solution and 6 cm^3 of 4 M HCl to a liquid scintillation vial.

9.29. The blank solutions and samples are counted for 100 minutes.

10. Operation of the Scintillation Counter

10.1. Refer to the operating manual for the Packard Tri-Carb Liquid Scintillation Counter.

10.2. Set the gain of the third channel of the liquid scintillation counter for 1% gain and the window settings at 50 and 1000.

11. Calculations

11.1. The total counts for each sample are printed on paper tape, and the following calculations are made.

11.1.1.

$$E = \frac{C_s - C_b}{T \times A}$$

where
- E = efficiency of the counter
- C_s = counts per 100 μL of standard
- C_b = counts per 100 μL of background urine
- T = count length in minutes
- A = activity (dis/min/100 μL of standard)

11.1.2.

$$pCi/L = \frac{(C_u - C_b) \times 1000\ cm^3}{V \times T \times E \times K}$$

where C_u = counts of the unknown
C_b = counts of the background
V = sample size of unknown in cm^3
T = count length in minutes
E = efficiency of the counter
K = 2.22 (to convert dis/min to pCi)

12. Source Materials

12.1. L. J. Kirby, USAEC Report HW-77609 (1963).

12.2 *EML Procedures Manual*, 25th. ed., H. L. Volchok and G. de Planque, Eds. (Environmental Measurements Laboratory, New York, August 1982).

POLONIUM-210 IN URINE

Analyte: Polonium-210	**Method No:** R160
Matrix: Urine	**Accuracy and Precision:** 90% ± 3% (mean ± 1 sigma) at the 15-pCi level
Contact Person: Margaret A. Gautier	
Minimum Detectable Activity: 0.1 pCi/L	**Acceptable Minimum Detectable Activity:** 0.1 pCi/L
Procedure: Electrodeposition and Alpha Counting	**Effective Date:** 05/01/55 to 01/01/89

1. Principle of Method

1.1. Polonium-210 in a 100-cm^3 aliquot of urine is plated on one side of a pure nickel disk.

1.2. The deposited ^{210}Po is counted on a calibrated alpha scintillation counter, and the activity is reported in pCi/L.

2. Sensitivity

2.1. The sensitivity of the method varies with counting time and detector background. A sensitivity level of 0.01 pCi per sample (0.1 pCi/L) is obtainable.

2.2. For routine measurements with a 1000-minute counting period and a counting efficiency of 50%, the minimum detection limit (the 95th percentile of the background distribution) is 0.01 pCi/100-cm^3 sample.

3. Accuracy and Precision

3.1. Average recovery of the standards is equal to 90% ± 3% at the 15-pCi concentration level.

4. Interferences

4.1. Lead-210 and bismuth-210 are deposited on nickel along with the polonium. Since they are beta emitters, they do not interfere in the alpha counting.

4.2. Other metals such as silver, gold, and mercury, which have lower oxidation potentials than nickel, will also deposit on nickel. These metals are not found in sufficient quantities in urine to interfere with the alpha measurement.

5. Collection and Storage of Samples

5.1. Prior to sample collection, prepare glass bottles by adding approximately 0.15 g of sulfamic acid crystals.

5.2. Refrigerate the samples prior to analysis. Studies have shown that the samples may be stored for up to 2 weeks without measurable loss of ^{210}Po.

6. Apparatus

6.1. Alpha scintillation counter: Los Alamos National Laboratory, Model No. 4, designed and manufactured at Los Alamos (Drawing No. Y-40982).

6.2. Bottle holder: Lucite plastic, keeps the plastic bottles upright in the water bath during plating.

6.3. Engraving tool: used to mark sample numbers on the bottom of nickel disks.

6.4. Glass sampling bottles: 500-cm^3 capacity.

6.5. Nickel disks: made from 0.64-mm-thick "commercial pure" nickel sheet, 2.2-cm (7/8-inch) diameter.

6.6. Plastic bottles: Nalgene 250-cm^3 capacity, with size 24 plastic cap.

6.7. Electric stirrers: capable of rotating stirring rods in the samples at approximately 300 rpm.

6.8. Stirring rods: Pyrex glass rod with handle 16 cm long and flattened on one end to 2.5 cm wide by 2 cm long.

6.9. Water bath: used to heat the samples to 85°C during the plating step. "Blue M, Magni Whirl," Model No. MW 1120, Blue M Electric Co., Chicago, Illinois.

6.10. Ultrasonic cleaner: Branson, Model 52.

7. Reagents

7.1. Hydrochloric acid (6 N), reagent-grade.

7.2. Nitric acid (concentrated), reagent-grade.

7.3. Sulfamic acid (crystals), reagent-grade.

7.4. Primary Standard, ^{210}Po, 1-mCi standard solution, purchased from New England Nuclear.

8. Calibration and Standards

8.1. The primary solution is made by diluting a 1-mCi standard solution of ^{210}Po to 1000 cm^3 with distilled water. This solution is again standardized in a calibrated alpha scintillation counter by counting planchets containing 0.1 cm^3 of the stock solution. The disks should be air-dried to prevent volatilization losses of ^{210}Po. Because the half-life for ^{210}Po is only 138.0 days, all standards are corrected for decay before each use.

8.2. The secondary standard solution is prepared by diluting 1 cm^3 of primary solution to 1000 cm^3 with distilled water.

8.3. Urine standards are prepared by adding the required amount of secondary standard solution to blank urine samples.

8.4. Standards and reagent blanks are processed through the entire analytical procedure.

9. Procedure

9.1. Place the nickel disks into a small beaker containing a few cm^3 of trichloroethylene. Place this beaker in an ultrasonic cleaner and clean for several minutes.

9.2. Remove the disks from the beaker and wipe them dry with a clean tissue. Avoid finger contact with the cleaned surface.

9.3. Engrave the sample number on the rough side of the disks.

9.4. Place the disk with the engraved side down into the screw cap of a 250-cm^3 plastic bottle.

9.5. Cut the bottom out of the plastic bottle and mark the sample number on the side of the bottle.

9.6. Screw the cap containing the nickel disk firmly on the top of the plastic bottle.

9.7. Add about 2 cm^3 of concentrated HNO_3 to each bottle and swirl the acid over the nickel disk for about 15 seconds to clean the surface and to expose the metallic nickel.

CAUTION: Swirl the acid over a sink since there may be a leak between the cap and the bottle.

9.8. Pour out the HNO_3 and rinse the bottle three times with distilled water.

9.9. Fill the inverted bottle with distilled water and allow the bottle to stand for about 15 minutes to leak-test the cap seal. Pour out the water.

9.10. Add 100 cm^3 of the urine sample to the plastic bottle and add 20 cm^3 6 M HCl.

9.11. Mark the level of the liquid in the bottle on the outside with a waterproof felt marker.

9.12. Prepare the water bath by filling it with water above the urine level in the plastic bottles. Set the temperature to 85°C.

9.13. Place the inverted bottle into the water bath.

9.14. Stir the sample mechanically for 4 hours to allow deposition of the ^{210}Po onto the nickel disks. Periodically (about every hour) add enough distilled water to the sample to maintain the liquid level marked on the bottle.

9.15. After 4 hours remove the bottles from the water bath and pour out the urine.

9.16. Unscrew the caps containing the nickel disks and rinse the disks three times with distilled water.

9.17. Cut the disks from the caps using a knife blade and rinse the disks once more with distilled water.

9.18. Allow the disks to **air-dry** at room temperature and mount them for alpha counting.

9.19. Submit the disks to the count room for counting on a low-background alpha scintillation counter.

10. Calculations

10.1. The recovery factor is determined by dividing the dis/min found in the standards by the dis/min added to the standards.

$$RF = \frac{C_{st} - C_b}{T \times S}$$

where
- RF = recovery factor
- C_{st} = standard counts
- C_b = background counts
- T = count length
- S = dis/min of the ^{210}Po standard

10.2. The acitivity of the samples is obtained from the following formula.

$$pCi/L = \frac{C_s - C_b \times 1000\ cm^3}{RF \times EFF \times V \times 2.22 \times T}$$

where C_s = sample counts
C_b = background counts
RF = recovery factor
EFF = counter efficiency
V = sample volume in cm^3
2.22 = factor used to convert dis/min to pCi
T = count length in minutes

11. Source Materials

11.1. R. L. Blanchard, Anal. Chem. **38**, 189-192 (1966).

11.2. "Analytical Procedures of the Industrial Hygiene Group," Los Alamos Scientific Laboratory report LA-1858 (2nd ed.) (August 1958), pp. 172-173.

PLUTONIUM IN URINE—ALKALINE EARTH PHOSPHATE PROCEDURE

Analyte: Plutonium	**Method No.:** R170
Matrix: Urine	**Accuracy and Precision:** 95% ± 7% (mean ± 1 sigma) at the 2-pCi level
Minimum Detectable Activity: 0.03 pCi/700 mL	**Acceptable Minimum Detectable Activity:** Urine 0.06 pCi/L
Procedure: Coprecipitation and alpha spectrometry	
Effective Date: 10/01/86	**Author:** William D. Moss Rubanna Rodriguez Gloria Martinez

SAFETY NOTE: Before beginning this procedure, read all of the Material Safety Data Sheets for the chemicals listed in Sec. 7. Read Sec. 4.3 of the EM-9 Safety Manual for information on personal protective clothing and equipment.

1. Principle of Method

1.1. Plutonium is coprecipitated with alkaline earth phosphate in Teflon bottles at room temperature.

1.2. The precipitate is dissolved in 8 N HNO_3, heated, and absorbed onto anion exchange resin.

1.3. The plutonium is eluted from the column with 0.36 M HCl and 0.008 M HF.

1.4. Plutonium is electrodeposited on a stainless steel disk.

1.5. The alpha activity is determined by alpha pulse height analysis. Plutonium-242 tracer recovery is used to correct for chemical loss.

2. Sensitivity

2.1. Sensitivity is limited by the counter background.

2.2. For routine measurements with a 70,000-s counting period and a counting efficiency of 30%, the minimum detection limit (the 95th percentile of the background distribution) is 0.03 pCi per sample. See Step 11.3.3.

3. Accuracy and Precision

3.1. Mean recovery of ^{242}Pu tracer is equal to 95% ± 7% at the 2-pCi concentration level.

4. Interferences

4.1. Interference is caused by alpha activity from thorium.

5. Collection and Storage of Samples

5.1. Equivalent 24-h samples, two morning and two evening voidings, are collected in specimen bottles. The minimum volume analyzed for routine measurements should be 500 mL to allow detection of the plutonium relative to an estimated 24-h excretion.

5.2. Refrigerate samples before analysis.

6. Apparatus

6.1. Alpha spectrometer: equipped with a 1024-channel analyzer using 300-mm^2 silicon-surface barrier detectors.

6.2. Beakers: 30-mL.

6.3. Coin holders: Grisby Bros., 817 N.E. Madroma, Portland, Oregon 87211, to hold disks after plating.

6.4. Electrodeposition apparatus: dc power supply to provide up to 500 milliamperes of regulated current to each electrolytic cell.

6.5. Electrolytic cell: polyethylene cell body 2.22-cm-o.d. by 9.0-cm-long threaded on one end and a stainless steel cap threaded to fit and hold 1.59-cm-diam stainless steel disk in place (Fig. 1). Fabricated at Los Alamos.

6.6. Graduated cylinders: 10-mL and 1000-mL.

6.7. Hot plates: 500-watt and 1000-watt, adjustable to 200°C.

6.8. Ion exchange columns: glass column, 50-mm-long by 15-mm-o.d. (12-mm-i.d.), with a reservoir at the top, 80-mm-long by 45-mm-o.d., and a 45° angled taper at the bottom (Fig. 2).

6.9. Teflon bottles: wide-mouth, 1000-mL, Catalog No. 16128-535, VWR Scientific, Los Alamos, New Mexico 87545.

6.10. Stainless steel disks: 1.59-cm (5/8-in.) disk, fabricated from 15- to 20-mil 316 stainless steel, cold rolled or No. 4 finish.

6.11. Teflon-coated stirring bars: 1½-in.

6.12. Fume hood.

6.13. Infrared heat lamp: 250-watt.

6.14. Eyedroppers.

6.15. Polyethylene wash bottles: 16-oz.

6.16. Glass wool.

6.17. Filter paper: Whatman No. 2.

6.18. Wide-mouth polyethylene bottle: 1000-mL.

6.19. Polyethylene dropping bottle: 6-oz.

6.20. Ion exchange column: to hold one pound of resin (Fig. 3).

7. Reagents

7.1. Nitric acid (8 M). Dilute 1000 mL of concentrated HNO_3 (70%, specific gravity 1.42) to 2000 mL with H_2O.

7.2. Sodium hydroxide (25 weight percent). Dilute the 50% reagent with an equal volume of H_2O.

7.3. Eluant solution (0.36 M HCl • 0.01 M fluoride). Dilute 30 mL of concentrated HCl and 230 mg of ammonium bifluoride (NH_4F-HF) to 1000 mL with H_2O.

7.4. Plutonium-242 tracer. A solution of 2 pCi/mL in 8 M HNO_3.

7.5. 1-Octanol (Eastman, practical-grade).

7.6. Sodium sulfate solution (15%). Dissolve 150 g of anhydrous sodium sulfate and dilute to 1000 mL with water. Filter.

7.7. Sodium bisulfate solution (5%). Dissolve 50 g of $NaHSO_4 \cdot H_2O$ and dilute to 1000 mL with H_2O.

7.8. Calcium nitrate solution. Dissolve one pound (453 g) of $Ca(NO_3)_2 \cdot 4H_2O$ and dilute to 450 mL with H_2O. Filter the solution through Whatman filter paper.

7.9. Hydrogen peroxide solution (30%).

7.10. Bio-Rad anion exchange resin (AG 1-X4, 100-200 mesh). See Step 9.1 for preparation of resin.

7.11. Hydrochloric acid (concentrated 36%-38%).

7.12. Ammonium hydroxide (concentrated 28%-30%).

7.13. Ammonium hydroxide solution (1%). Dilute 5 mL of concentrated NH_4OH to 500 mL with H_2O.

7.14. Phosphoric acid (85%, specific gravity 1.70).

7.15. Silver nitrate crystals.

7.16. Acetone.

8. Calibration and Standards

8.1. Plutonium-242 tracer.

8.1.1. The ^{242}Pu stock solution is obtained from Oak Ridge National Laboratory.

8.1.2. The tracer solution is prepared in an acid medium (8 M HNO_3) and heated at 80°C for 2 h to assure that the plutonium is in the ionic Pu (IV) valence state.

8.1.3. Concentration of the tracer is in the 2-pCi/mL (4.44-dpm) range and is standardized against NIST standard reference material NIST SRM 4906 B15, a ^{238}Pu standard.

8.2. Calibration of the alpha spectrometer.

8.2.1. The alpha secondary standards contain the isotopes ^{241}Am, ^{239}Pu, and ^{242}Pu and are standardized in a gas flow proportional counter using the NIST ^{238}Pu (NIST SRM 4906 B15) primary standard.

8.2.2. Calibration counts are made for 1020 s. The efficiency of each detector is determined by integrating the counts in 19 channels (12 channels to the left of the peak and 6 channels to the right of the peak) of the energy spectrum of each of the three isotopes.

8.2.3. Background counts are accumulated for each energy spectrum for each detector for 70,000 s.

9. Procedure

9.1. Preparation of one pound of Bio-Rad AG 1-X4, 100-200 mesh resin for the anion exchange of plutonium.

9.1.1. To remove the fines, pour a pound of resin into a 2-L beaker and add water to give a volume of approximately 1600 mL.

9.1.2. Stir the slurry on a magnetic stirrer for 3 to 5 min.

9.1.3. Slowly decant the water along with the fines when the bulk of the resin has settled.

9.1.4. Repeat the washing and decanting.

9.1.5. Pour the resin into the column (Fig. 3).

9.1.6. Wash the resin in the column with 4 L of 2 M NaOH solution. Dilute 500 mL of 50% reagent-grade NaOH to 4 L.

9.1.7. Wash the resin with 1 L of water.

9.1.8. Wash the resin in the column with a 25% HNO_3 solution by flowing the acid through the column until the wash solution from the resin gives a negative test for chloride. Ten mL of wash solution is added to a beaker containing dilute $AgNO_3$ solution. A white precipitate indicates the presence of chloride.

9.1.9. After a negative test for chloride is obtained, wash the resin with another 2 L of 25% HNO_3 solution.

9.1.10. Wash the resin with 1 L of water.

9.1.11. Transfer the resin to the 2-L beaker.

9.1.12. Add approximately 1500 mL of H_2O to the beaker and stir the slurry for 5 min. When the bulk of the resin has settled, decant the solution along with the fines.

9.1.13. Store the resin as a water slurry in the original bottle.

9.2. Chemical isolation.

9.2.1. Pour the entire contents of the sample into a 2000-mL graduated cylinder. Measure and record the volume, specific gravity, and temperature of the sample.

9.2.2. Add 5 to 10 drops of 1-Octanol to the sample.

9.2.3. Rinse each bottle with approximately 5 mL of 8 M HNO_3. Add the acid wash to the sample. Mix the solution.

9.2.4. Pour 700 mL of urine into a 1000-mL wide-mouth Teflon bottle. If less than 700 mL of urine is available, use the entire sample but not less than 500 mL. See Step 5.1.

9.2.5. For special samples with high activities, smaller aliquots are used.

9.2.5.1. Select an aliquot based on liquid scintillation measurements or other available information.

9.2.5.2. Add this aliquot to a 1000-mL wide-mouth Teflon bottle. Record aliquot volume.

9.2.5.3. Add 100 mL distilled water to the bottle. Proceed with Step 9.2.6.

9.2.6. Add 1 mL of ^{242}Pu tracer solution.

9.2.7. Add 0.1 mL (2 drops) of $Ca(NO_3)_2$ solution.

9.2.8. Add 1 mL of concentrated H_3PO_4.

9.2.9. Add 10 mL of 30% H_2O_2.

9.2.10. Add 100 mL of concentrated NH_4OH.

9.2.11. Place cap on Teflon bottle and shake for 30 s. Let bottle stand for 30 min. Shake bottle again for 30 s. Loosen cap and let sample settle overnight before proceeding to Step 9.2.12.

9.2.12. Uncap bottle and slowly decant the supernatant solution. The resulting slurry should be 100 mL.

9.2.13. Add 100 mL concentrated HNO_3. Swirl mix to dissolve slurry.

9.2.14. Place cap loosely on bottle.

9.2.15. Set the bottle on a hot plate that has a surface temperature of 100°C-125°C for 90 min. Swirl the solution to wash the sides of the bottle.

NOTE: Heating the sample assures conversion of Pu to the +4 valence state.

9.3. Anion exchange separation.

9.3.1. Put a plug of glass wool into the bottom of the anion exchange column and fill the column with AG 1-X4, anion exchange resin. Wash the column with H_2O until the resin column maintains a constant level.

9.3.2. Wash the column reservoir with 75 mL of 8 M HNO_3 and allow the solution to drain down to the top of the column.

9.3.3. Pour sample into the column reservoir.

9.3.4. When all of the sample has been transferred to the column reservoir and has completely drained, rinse the bottle with 8 M HNO_3 and pour the washings into the column reservoir. Wash the bottle two additional times with 5-10 mL 8 M HNO_3.

9.3.5. When the 8 M HNO_3 solution has drained down to the top of the resin column, wash the walls of the reservoir with 8 M HNO_3. Repeat this washing three additional times.

NOTE: If the solution does not completely drain down to the top of the resin column before the next increment of 8 M HNO_3 wash is added, the calcium will not be completely separated from the plutonium. Presence of Ca on the electroplated surface will interfere with measurement of alpha activity.

9.3.6. Fill the reservoir with 8 M HNO_3.

9.3.7. Place a 30-mL beaker under the column after all the wash solution has flowed through the column.

9.3.8. Add 25 mL of 0.36 M HCl • 0.01 M fluoride eluting solution.

9.3.9. Add 2 mL of 5% $NaHSO_4$ solution to the 30-mL beaker. Stir the solution.

9.3.10. Evaporate the slurry to dryness on a hot plate with a surface temperature of 150°C to 185°C. The surface temperature should not be above 150°C for the first 30 min because the solution may splatter. If the residue is brown, add 5 mL of 8 M HNO_3 to the sample and evaporate to dryness.

9.3.11. Remove beakers from hot plate and allow to cool.

9.4. Electrodeposition.

9.4.1. Add 4 mL of electrolyte solution (15% Na_2SO_4) to the beaker.

9.4.2. Remove the backing (paper or plastic) from the stainless steel disk and wash the disk with acetone.

9.4.3. Assemble the cell, placing the disk into the bottom depression of the cap, and screw together.

9.4.4. Fill the cell with water to test for leaks. Discard the water.

9.4.5. Add the sample solution to the cell.

9.4.6. Rinse the sample beaker with water and add the wash to the cell. Fill to within 15 mm of the top.

9.4.7. Place the cell in the electrodeposition rack and cover with a plastic cover.

9.4.8. Attach the cathode lead to the cell cap.

9.4.9. Turn on the main switch of the electrodeposition unit. Turn the switch on each unit to positive and set to a current of 0.5 ampere.

9.4.10. Electroplate for 180 min (3 h).

9.4.11. Add 1 to 2 mL of 25% NaOH to the cell and, after 60 s, turn off the current.

9.4.12. Pour the solution out of the cell and disassemble the cell. Wash the stainless steel disk with 1% NH_4OH solution. **Be sure not to touch the surface of the disk.**

9.4.13. Dry the disk under a heat lamp, number the back of the disk with a marking pen, and put the disk into the coin holder, numbered and labeled with sample identification.

10. Operation of the Alpha Spectrometer

10.1. Refer to the operating manual for the alpha spectrometer.

11. Calculations

11.1. Samples are counted for 70,000 s. Alpha activity, corresponding to the isotopes of ^{242}Pu, ^{239}Pu, and ^{238}Pu, is determined by integrating counts in 19 channels (12 channels to the left of the peak and 6 channels to the right of the peak) for each energy. See Table I.

11.2. Calculations are made using the following formulas.

11.2.1. Determination of chemical recovery.

$$RF = \frac{C_s - C_b}{T \times D \times S} ,$$

where RF = recovery factor for ^{242}Pu tracer,
C_s = ^{242}Pu sample counts,
C_b = ^{242}Pu background counts,
T = count length in minutes,
D = detector counting efficiency, and
S = disintegrations per minute (dpm) of ^{242}Pu standard.

11.2.2. Determination of the amount of ^{238}Pu and ^{239}Pu in the sample.

$$pCi = \frac{C_s - C_b}{T \times D \times RF \times 2.22} ,$$

where pCi = concentration of Pu in the sample,
C_s = ^{239}Pu or ^{238}Pu counts,
C_b = background counts,
T = count length in minutes,
D = detector efficiency,
RF = recovery factor for ^{242}Pu, and
2.22 = factor used to convert dpm to pCi.

11.2.3. Urine samples are corrected for estimated 24-h excretion based on sample volume and specific gravity (corrected to 15°C).

$$T = V + [((SG - 1.000) \times 1000) \times 21] + (-415) ,$$

where T = time in minutes,
V = volume in mL of aliquot analyzed, and
SG = specific gravity.

$$EE = \frac{Pu \times 1440}{T} ,$$

where EE = estimated excretion of 24 h,
Pu = pCi of Pu in aliquot analyzed,
1440 = minutes in 24-h period, and
T = time in minutes.

11.3. Detection limits.

11.3.1. The minimum detectable amount (MDA) of plutonium alpha activity determined by this procedure is a function of the instrument background counts in the energy area of the $^{239,238}Pu$, the tracer recovery, and the counting efficiency of the system.

11.3.2. Calculation of the MDA.

$$MDA = \frac{(4.65 \times S_b + 3)}{E \times RT \times T} ,$$

where MDA = minimum detectable amount expressed in dpm,
4.65 = constant necessary to achieve desired protection against Type I and Type II statistical errors at the 0.05 confidence level,
3 = constant to allow for error of small-count statistics associated with Poisson distributions,
*S_b = the standard deviation of the population of counts obtained from the analysis of quality control blank urine samples,
E = detector counting efficiency (expressed as a fraction),
RT = chemical recovery (expressed as a fraction), and
T = standardized sample counting time (1167 min).

*The mean blank counts for the 5.15- and 5.5-keV alpha energies average 3 counts per 70,000 s, and the estimated value of S_b would equal the square root of 3, or 1.73.

11.3.3. The MDA for a sample using this formula would be 0.06 dpm or 0.03 pCi per sample aliquot. The calculation assumes a mean recovery of the tracer of 60%, a mean background of 3 counts, a 1167-min count length, and a counting efficiency of 30%. If higher tracer recoveries are achieved, >60%, a lower MDA is also achieved. MDAs are calculated for each reported sample. Correction for sample volume is not included in the above formula, and this factor must be taken into account when results are expressed per total sample volume analyzed.

11.3.4. If results are to be reported in Bq, divide the dpm by 60.

12. Source Materials

12.1. I. K. Kressin, *Anal. Chem.* **49**, 842 (1977).

12.2. I. K. Kressin, W. D. Moss, E. E. Campbell, and H. F. Schulte, *Health Phys.* **28**, 41 (1975).

12.3. E. E. Campbell and W. D. Moss, *Health Phys.* **11**, 737-42 (1965).

12.4. I. K. Kressin and G. R. Waterbury, *Anal. Chem.* **34**, 1598 (1962).

12.5. W. D. Moss, E. R. Gonzales, R. Rodriguez, G. M. Martinez, and H. M. Ide, "A Simplified Plutonium Bioassay Procedure," Thirty-Second Annual Conference on Bioassay, Analytical and Environmental Radiochemistry, National Bureau of Standards, Gaithersburg, Maryland, October 21-23, 1986.

12.6. L.A. Currie, "Limits for Qualitative Detection and Quantitative Determination," *Anal. Chem.* **40**, 586-593 (1968).

12.7. L.A. Currie, "Lower Limit of Detection: Definition and Elaboration of a Proposed Position for Radiological Effluent and Environmental Measurements," U.S. Nuclear Regulatory Commission report NUREG/CR-4007 (September 1984).

Revisions or additions to the procedure are marked (▒▒▒▒). Where a section heading is marked, the entire section has been revised.

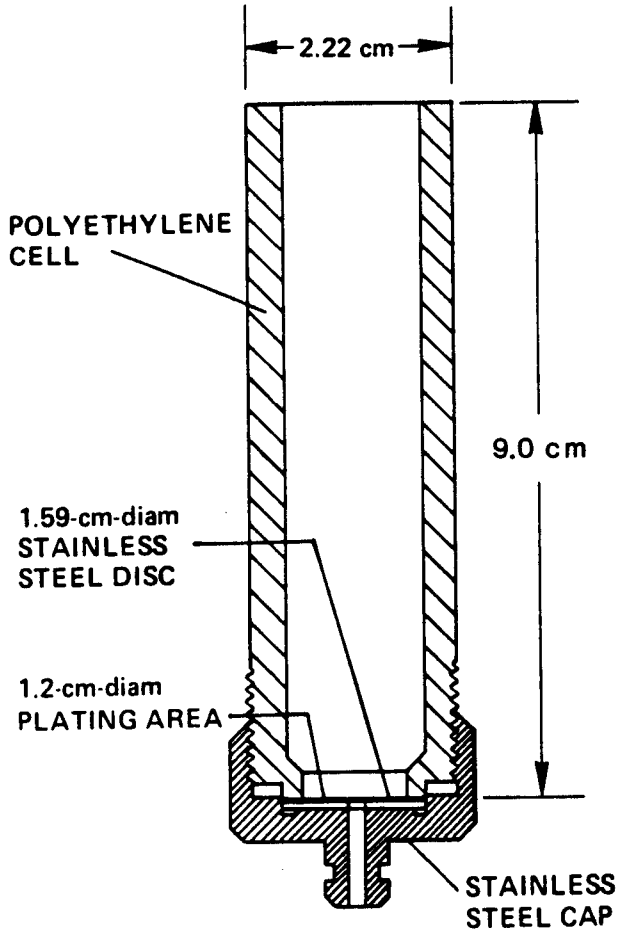

Fig. 1. Electrolytic cell.

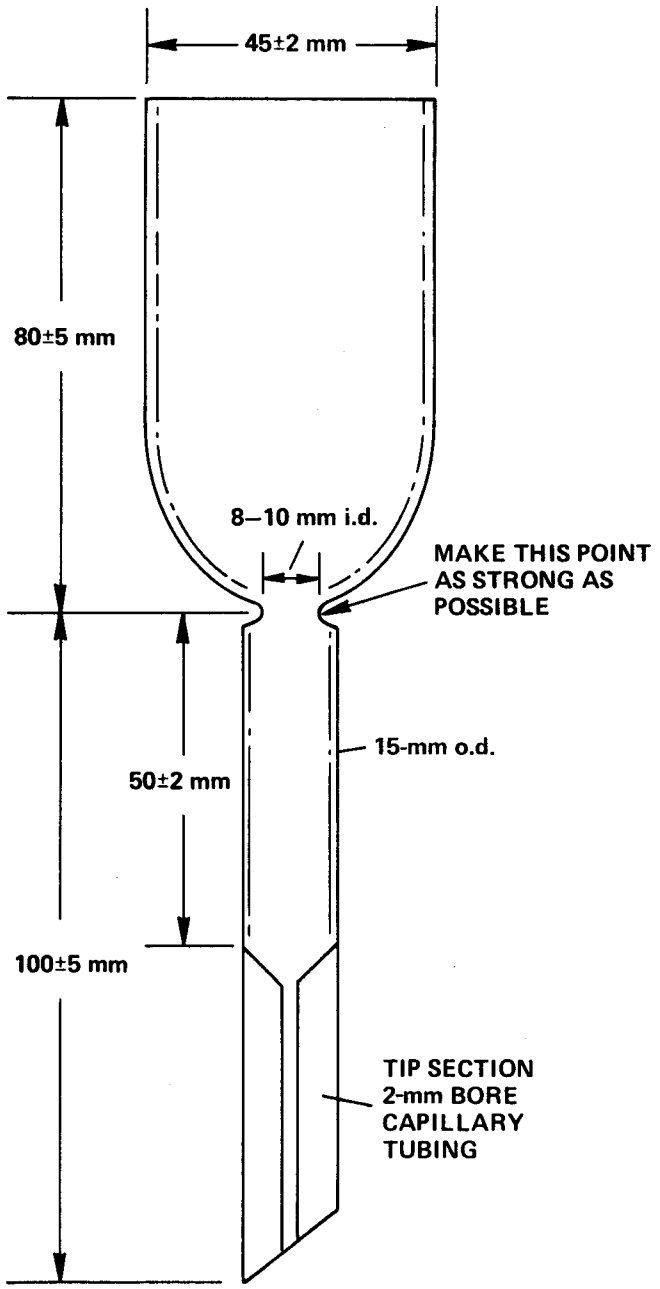

Fig. 2. Ion exchange column.

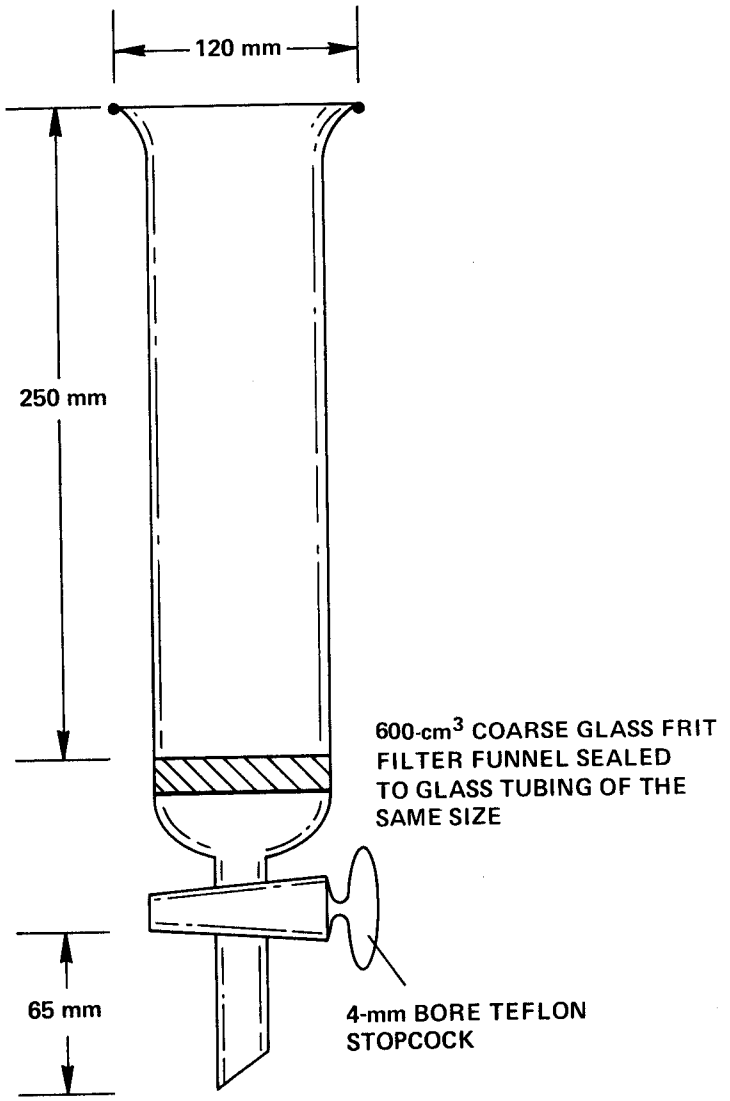

Fig. 3. Column for resin conditioning.

TABLE I. ENERGY SPECTRUM FROM ALPHA SPECTROMETER

Channel	Counts	Channel	Counts
30	1	71	360—Peak ^{239}Pu
31	4	72	279 (5.15 MeV)
32	2	73	154
33	7	74	76
34	5*	75	16
35	5	76	3
36	7	77	1*
37	11	78	1
38	12	79	0
39	30	80	0
40	35	81	0
41	58	82	0
42	71	83	0
43	130	84	0
44	127	85	1
45	171	86	0
46	181—Peak ^{242}Pu	87	0
47	133 (4.9 MeV)	88	0
48	66	89	0
49	25	90	1
50	2	91	3*
51	1	92	0
52	4*	93	0
53	1	94	1
54	1	95	1
55	0	96	3
56	6	97	5
57	5	98	7
58	7	99	9
59	7*	100	19
60	12	101	21
61	21	102	28
62	24	103	50—Peak ^{238}Pu
63	31	104	32 (5.5 MeV)
64	50	105	31
65	81	106	27
66	109	107	22
67	145	108	4
68	215	109	0*
69	270	110	0
70	335	111	0

***Counts integrated over 19 channels, 12 to the left and 6 to the right of the energy peak.**

PLUTONIUM IN URINE—A RAPID METHOD FOR ANALYSIS

Analyte: Plutonium	**Method No:** R190
Matrix: Urine	**Accuracy and Precision:** 94% ± 13% (mean ± 1 sigma) at the 0.8-pCi level
Author: Harold M. Ide	
Minimum Detectable Activity: 1.6 pCi/L	
Procedure: Coprecipitation and Alpha Phosphor Scintillation Counting	**Effective Date:** 12/01/82 to 01/01/89

1. Principle of Method

1.1. Plutonium is coprecipitated with Sulkowitch reagent as calcium ammonium oxalate.

1.2. The precipitate is collected on a 6-cm-diameter millipore filter.

1.3. The alpha activity is determined by zinc sulfide phosphor counting methods.

2. Sensitivity

2.1. Sensitivity is limited by the counter background.

2.2. For routine measurements with a 60-minute counting period and a counting efficiency of 28-50%, the minimum detection limit (the 95th percentile of the background distribution) is 0.13 pCi per 80-cm^3 sample.

3. Accuracy and Precision

3.1. The accuracy of the method is dependent on the self-absorption of each urine sample. For a series of urine samples spiked with 0.8 pCi of ^{239}Pu, the mean counting efficiency was 37% ± 8% (mean ± 1 sigma). This would be equal to an overall accuracy of 94% ± 13%.

4. Collection and Storage of Samples

4.1. Samples are collected in glass specimen bottles.

4.2. Retain remaining sample until the result is reported.

5. Apparatus

5.1. Centrifuge tubes: 90-cm^3.

5.2. Water bath.

5.3. Glass stirring rods.

5.4. Polyethylene wash bottle: 16-oz.

5.5. Millipore filters: 6-mm diameter, 0.8-μm pore size.

5.6. Glass filtration system: fritted, supports 6-mm-diameter filters.

5.7. Suction flask: 2-liter.

5.8. Laboratory vacuum system.

5.9. Ring and disk sets: 7-cm diameter, fabricated at Los Alamos.

5.10. Phosphor disks: type AST-3. The phosphor is a standard Sylvania Type 130 phosphor coated on one side of 0.0127-cm Mylar. Cut the phosphor into 6-cm-diameter disks. Obtain from Wm. B. Johnson Associates, Inc., P. O. Box 415, Mountain Lakes, New Jersey 07046.

5.11. Mylar: 0.0025-cm-thick film, Cadillac Plastic Co., 2305 W. Beverly Blvd., Los Angeles, California.

5.12. Vacuum dessicator.

5.13. Alpha scintillation-counting system equipped with 3-inch photomultiplier tubes.

6. Reagents

6.1. Sulkowitch reagent. Add 25 g oxalic acid, 25 g ammonium oxalate, and 50 cm^3 glacial acetic acid to 500 cm^3 H_2O. Dilute to 750 cm^3 with H_2O.

6.2. Ammonium hydroxide (1%). Dilute 10 cm^3 of concentrated NH_4OH to 1 liter with H_2O.

7. Calibration and Standards

7.1. A plutonium-239 stock solution.

7.2. Make dilutions equivalent to 0.4 pCi, 0.8 pCi, and 1.2 pCi per cm^3 for preparation of the calibration curve.

8. Procedure

8.1. Heat the water in the water bath to boiling.

8.2. Place 80 cm^3 of urine in a 90-cm^3 centrifuge tube and place in the water bath.

8.3. Heat the sample for 20 minutes.

8.4. Add 250 μL of Sulkowitch reagent while stirring.

8.5. Heat for an additional 20 minutes.

8.6. Remove the sample from the water bath and cool to room temperature.

8.7. Place the 6-cm-diameter millipore filter into the glass filtration system and attach it to the suction flask.

8.8. Turn on the vacuum and wet the filter with H_2O to assure that the filter seals properly.

8.9. Transfer the entire sample to the filtration system.

8.10. Wash the filter with 1% ammonium hydroxide solution.

8.11. Turn off the vacuum. Remove the filter and place it in a vacuum dessicator for 40 minutes.

8.12. Remove filter from the dessicator and place on the assembled ring and disk-counting apparatus.

8.13. Determine the dis/min of gross alpha activity by alpha phosphor scintillation counting.

9. Operation of the Alpha Phosphor Scintillation Counter

9.1. Refer to the operating manual for the alpha phosphor scintillation counter.

10. Calculations

10.1. Plot the standard curve on linear graph paper with counts on the y-axis and concentration of Pu on the x-axis.

10.2. Determine the concentration of the samples from the standard curve.

10.3. Report results as pCi/80 cm^3 of sample.

THORIUM IN URINE — COLORIMETRIC PROCEDURE

Analyte: Thorium	**Method No:** R210
Matrix: Urine	**Accuracy and Precision:** 95% ± 3% (mean ± 1 sigma) at 20 μg/L
Author: Ivan K. Kressin	
Minimum Detectable Activity: 20.0 μg/L	
Procedure: Anion Exchange and Colorimetry	**Effective Date:** 01/01/63 to 01/01/89

1. Principle of Method

1.1. Thorium is coprecipitated with alkaline earth phosphate.

1.2. The precipitate is dissolved in 7.8 N HNO_3 and adsorbed onto anion exchange resin.

1.3. The thorium is eluted from the anion exchange resin and determined colorimetrically using arsenazo-III dye as a chromogen for the isolated thorium.

2. Sensitivity

2.1. The sensitivity of the method using a 50-cm^3 sample is 0.02 μg/cm^3.

3. Accuracy and Precision

3.1. Average recovery of the standards is 95% ± 1σ 3% at the 20-μg/50-cm^3 concentration level.

4. Interferences

4.1. Plutonium is the only element which may be eluted from the anion exchange resin with the thorium. Since the final determination is done colorimetrically rather than radiometrically, plutonium should not be present in quantities large enough to interfere.

5. Collection and Storage of Samples

5.1. Urine samples are submitted to the laboratory in glass sampling bottles for analysis.

5.2. Refrigerate samples prior to analysis.

6. Apparatus

6.1. Centrifuge: clinical centrifuge with head to accept 90-cm^3 centrifuge tubes.

6.2. Centrifuge tubes: 90-cm^3 capacity, borosilicate glass.

6.3. Columns: borosilicate glass used to hold anion exchange resin (Fig. 1).

6.4. Hot plate.

6.5. Spectrophotometer: Cary 14.

6.6. Spectrophotometric cells: matched cells with a light path of 1 cm.

7. Reagents

7.1. Arsenazo-III solution (0.05%) w/v aqueous solution. Arsenazo-III may be purchased from Aldrich Chemical Co., Milwaukee, Wisconsin.

7.2. Ammonium hydroxide (concentrated), reagent-grade.

7.3. Calcium carrier (saturated solution), $Ca(NO_3)_2$.

7.4. Hydrogen peroxide (30%), reagent-grade.

7.5. Hydrochloric acid (6 M). Add 1 volume of concentrated HCl to an equal volume of distilled water.

7.6. Nitric acid (concentrated), reagent-grade.

7.7. Nitric acid (10 M). Add 320 cm^3 concentrated HNO_3 and dilute to 500 cm^3 with distilled water.

7.8. Bio-Rad anion exchange resin (AG 1-X4, 100-200 mesh), Bio-Rad Laboratories, Richmond, California 94804.

7.9. Phosphoric acid (85%), specific gravity 1.70.

8. Calibration and Standards

8.1. Primary standards are prepared by weighing 0.2380 g of solid $Th(NO_3)_4 \cdot 4H_2O$ and dissolving it in 500 cm^3 of 1% HNO_3 solution to give a concentration of 200 $\mu g/cm^3$.

8.2. Secondary standards are prepared by adding the required amount of primary standard solution to 50-cm^3 blank urine samples.

8.3. Process the standards through the analytical procedure.

9. Procedure

9.1. Add enough concentrated HNO_3 to each sample or standard to make the pH less than four. Shake thoroughly.

9.2. Transfer a 50-cm^3 aliquot of the urine to a 90-cm^3 centrifuge tube using a graduated cylinder.

9.3. Add two drops of calcium carrier and mix thoroughly.

9.4. Add 2 cm^3 of concentrated NH_4OH and stir until the resulting precipitate is uniformly distributed throughout the centrifuge tube.

9.5. Allow the precipitate to stand for at least 10 minutes and then separate the precipitate by centrifuging for 10 minutes at 1200 rpm.

9.6. Carefully decant the supernate and add approximately 2 cm^3 of concentrated HNO_3 to the precipitate in the centrifuge tube.

9.7. Quantitatively transfer the contents of each centrifuge tube into a 250-cm^3 beaker with more 10 M HNO_3 and bring the total volume of the solution to approximately 100 cm^3 with 10 M HNO_3.

9.8. Prepare the anion exchange column as follows:

9.8.1. Mix one part Bio-Rad AG 1-X4 (100-200 mesh) resin with an equal amount of distilled water to make a resin slurry.

9.8.2. Insert a glass wool plug at the bottom of a glass column.

9.8.3. Pour the slurry into the glass column until the resin reaches the bottom of the column reservoir. Avoid trapping air in the resin while pouring.

9.8.4. Convert the resin to the nitrate form by washing the resin bed three times with 10 cm^3 of 10 M HNO_3.

9.9. Transfer the sample solution into the column reservoir and allow it to flow through the resin bed.

9.10. Wash the resin bed with three 10-cm^3 washes of 10 M HNO_3.

9.11. Elute the thorium off the column with three 10-cm^3 portions of 6 M HCl and collect the eluate in a 50-cm^3 beaker.

9.12. Evaporate the eluate to dryness on a hot plate and convert the residue to the chloride form by treating it with 1 cm^3 of concentrated HCl.

9.13. Dissolve the dry residue in 4 cm^3 of 6 M HCl and quantitatively transfer the solution into a 10-cm^3 volumetric flask with 4 cm^3 of the 6 M HCl.

9.14. Add 1 cm^3 of aqueous 0.05% arsenazo-III solution to the volumetric flask and add enough 6 M HCl to bring the total solution to 10 cm^3.

9.15. Shake the contents of the flask and allow the thorium-arsenazo-III color to develop for 15 minutes.

9.16. Determine the thorium concentration colorimetrically using a spectrophotometer set to scan 660 nm.

10. Calculations

10.1. The amount of thorium in each sample is determined from an absorbance versus concentration plot obtained from the urine standards analyzed.

10.2. Plot the standard curve using linear graph paper with absorbance on the y-axis and concentration of thorium on the x-axis.

10.3. Determine the concentration of the samples from the standard curve.

10.4. Multiply the amount of thorium determined from the curve by 20 and report as μg per liter.

11. Source Material

11.1 O. Samuelson, *Ion Exchange Separations in Analytical Chemistry* (John Wiley & Sons, Inc., New York, 1963) pp. 312-314.

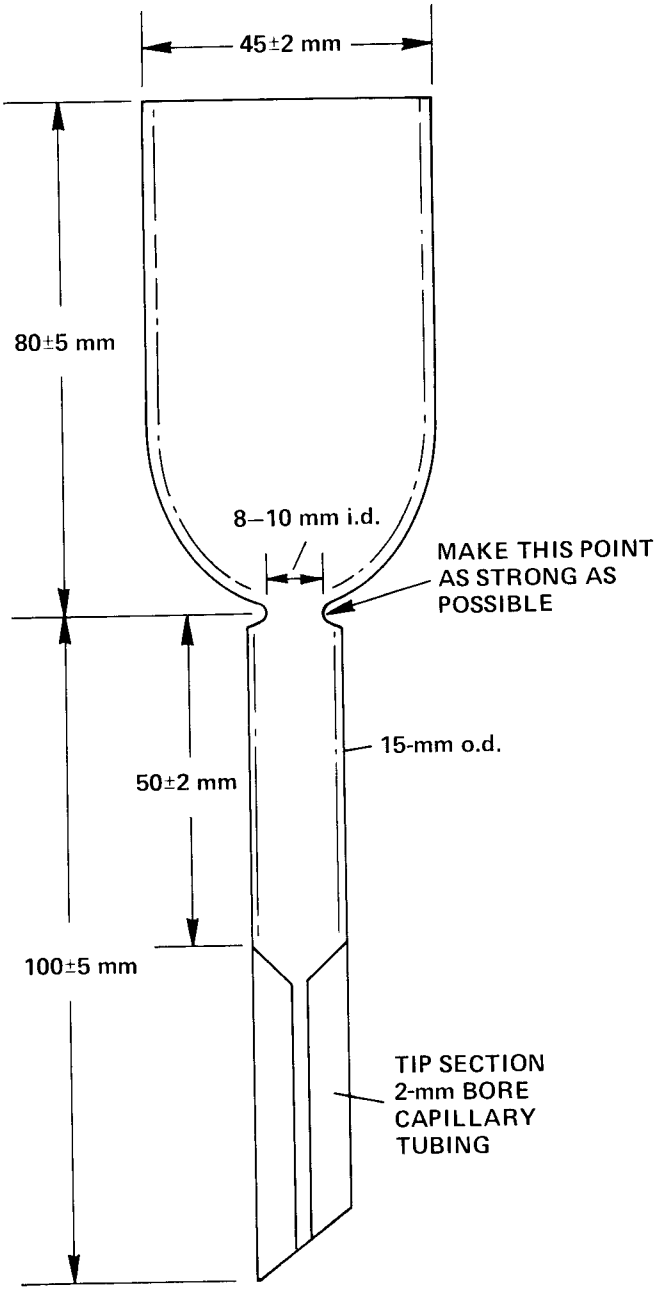

Fig. 1. Ion exchange column.

TRITIUM (T_2O OR TOH)—DIRECT PROCEDURE

Analyte: Tritium (Tritiated Water)	**Method No.:** R230
Matrix: Urine, water, oil, mercury	**Accuracy and Precision:** 100% ±5% (mean ±1 sigma) at the 1.0-μCi/L level
Minimum Detectable Activity: 0.03 μCi/L	**Acceptable Minimum Detectable Activity:** Urine 0.1 μCi/L
Procedure: Liquid Scintillation Spectrometry	
Effective Date: 01/01/81	**Author:** William D. Moss

SAFETY NOTE: Before beginning this procedure, read all of the Material Safety Data Sheets for the chemicals listed in Sec. 7. Read Sec. 4.3 of the EM-9 Safety Manual for information on personal protective clothing and equipment. Read Sec. 12 of this procedure and Source Materials 13.5 and 13.6 for proper waste disposal practices.

1. Principle of Method

1.1. The liquid sample is pipetted directly into a liquid scintillation vial to which a scintillation solution is added.

1.2. The sample is counted in a liquid scintillation spectrometer.

2. Sensitivity and Range

2.1. The method is valid over a range limited by the counter background and the electronic resolution time of the liquid scintillation spectrometer.

2.2. For routine measurements with a 10-min counting period, the minimum detection limit (the 95th percentile of the background distribution) is 0.03 μCi/L (with 140 counts per 10-min background counting period) and the upper limit is approximately 1000 μCi/L (5×10^5 counts/min).

3. Accuracy and Precision

3.1. The accuracy is 100% with a precision of ±5% at 1.0 μCi/L.

4. Interferences

4.1. All urine samples with color will cause count quench.

4.2. Samples that are suspected to contain other radionuclides shall be distilled to confirm the tritium concentration, using method R240.

5. Collection and Storage of Samples

5.1. Collect urine samples in specimen bottles. Collect other sample types in suitable containers free of contamination.

5.2. Refrigerate samples before analysis. Retain samples until results are reported.

6. Apparatus

6.1. Eppendorf pipette: 200-μL, with disposable tips, VWR Scientific, Los Alamos, N. M. 87545.

6.2. Plastic scintillation-counting vials: 25-mL, with plastic caps.

6.3. Packard Scintillation Counter: Model No. 2500, Packard Instrument Company, Inc., Downers Grove, IL 60515.

7. Reagents

7.1. Scintillation solution. Ultima Gold (Packard Instrument Company Inc., Catalogue No. 6013324, VWR Scientific, Los Alamos, N. M. 87545) or other similar commercial product. Evaluate each new lot number to assure reproducibility of results.

7.2. Low-background water. Obtain from a water source free of radionuclide contamination (deep well water, Well No. PM-1, is obtained from EM-8). This source of water will average 140 ± 12 (1 sigma) recorded counts per 10-min counting period.)

8. Calibration, Quality Assurance Materials, and Blanks

8.1. Calibration

8.1.1. In order to provide accurate analysis for each type of matrix encountered, matrix-specific calibration quench curves must be established.

8.1.1.1. Prepare a set of 10 samples in the matrix-specific liquid scintillation cocktail (10 mL for the bioassay program, 15 mL for the environmental program).

8.1.1.2. All samples will be overspiked with equal levels of ^{3}H standard (determine the amount that will provide adequate counting statistics within a reasonably short time).

8.1.1.3. Prepare a concentrated salt solution (5 g NaI + 40 mL deionized H_2O) as the quench agent.

8.1.1.4. Vary the amount of quench agent that is added to each of the 10 samples (usually ranging from 0 to 70 μL).

8.1.1.5. Count the samples in the liquid scintillation counting system. Use the appropriate counting protocol for the matrix of interest (i.e., bioassay or environmental program).

8.1.1.6. When initializing the liquid scintillation system, provide the appropriate input for the quench curve program. This will require the amount of standard added to the samples, the decay date of the standard, and any additional information that may be added to the comment field.

8.1.1.7. After the counting cycle is complete, the quench curve information may need to be copied to the counting protocols (2200CA counting system). The information is used automatically by the 2500TR counting system.

8.2. Quality Assurance Materials

8.2.1. Open Quality Assurance Materials

8.2.1.1. Prepare a set of samples that match the matrix of interest in the sample-to-cocktail load.

8.2.1.2. Make several sets of various overspikes utilizing an NIST H-3 standard, 4361B-57. Suitable activity ranges are 100-1000 pCi/L for the Environmental program and 1000-10,000 pCi/L for the Bioassay program.

8.2.1.3. Document the activity levels in the various QCs as a permanent marking on the samples.

8.2.1.4. These samples can be run with any sample set. The information gathered from the analysis of these samples will provide the count room personnel with a high degree of confidence that the current set of samples that were analyzed were completed within acceptable analytical limits.

8.2.2. Blind Quality Assurance Materials

8.2.2.1. Blind QC samples are usually run with every set. These samples are provided by the sample receiving section in EM-9. The QCs are provided with the sample set, the specific samples are unknown to the analyst.

8.2.2.2. The QC samples are run with the routine samples. The exact nature of the samples is not known until the final data reduction and report generation has taken place.

8.3. Blanks

8.3.1. Matrix blanks should be run with every set.

8.3.1.1. Four sets of three blanks each should be generated for each matrix. Obtain some deep-well water for the blank substrate.

8.3.1.2. Run one set of three blanks with each sample set, at the beginning of the set. These samples will then be used in the data reduction program.

9. Procedure

9.1. Using an Eppendorf pipette, pipette a 200-μL aliquot of the secondary tritium standard into a scintillation vial. Label the vial cap "Standard."

9.2. Prepare a blank with 200 μL of low-background water. Label the vial cap "Blank."

9.3. Preparation of samples.

9.3.1. URINE. Pipette a 200-μL aliquot of the sample into a scintillation vial. Label the vial cap with the sample number.

9.3.2. OIL. Pipette a 200-μL aliquot of the sample into a scintillation vial. Label the vial cap with the sample number.

9.3.3. MERCURY. Add an equal volume of water to the mercury and shake vigorously. After 10 minutes, pipette a 200-μL aliquot of the water into a scintillation vial. Label the vial cap with the sample number.

9.3.4. WATER. Pipette a 200-μL aliquot of the sample into a scintillation vial. Label the vial cap with the sample number.

9.4. Add 10 mL of scintillation solution to each sample, standard, and blank vial.

9.5. Shake each vial vigorously and wipe the outside with a tissue.

9.6. Submit the samples to the count room for liquid scintillation counting.

9.7. Cool all standards, blanks, and samples in the counter at 9°C for 30 min before counting to reduce the effect of photoluminescent and chemiluminescent reactions.

9.8. Count samples for 10 min.

10. Operation of Instrument

10.1. Loading the liquid scintillation counter.

10.1.1. Tighten the lid on the scintillation vial and shake vigorously to ensure complete mixing of the sample and cocktail.

10.1.2. Wipe the outside of the vial with a tissue and place the vial in the scintillation counter sample tray.

10.1.3. Write the sample number in the appropriate position on the tritium counting data sheet (Fig. 1).

10.1.4. Repeat the above procedure with the tray containing the standards and blanks. This tray should have the appropriate program indicator.

10.1.5. Place the samples in the sample tray in the following order: three blanks, two samples, the open QCs, and the remaining samples.

10.1.6. Place the samples in the liquid scintillation instrument, and let cool for approximately 1/2 h before beginning the count sequence. This will eliminate or at least minimize the effects of photoluminescent reactions.

10.2. To begin the counting sequence, depress the **F2** key on the 2200CA system, or the **GREEN** button on the 2500 TR system. This will automatically load and count the samples, providing both a hard copy and a disk file for electronic transfer to the VAX system.

10.3. Simultaneously press the **ENABLE** and **FORWARD** keys on the counter to begin counting.

10.4. For further information concerning the operation of the instrument systems, refer to the EM-9 Nuclear Counting Facilities Operating Procedures manual, procedure CR180.

11. Calculations

11.1. Calculations of radiometric counting data for determinations are made without a radiotracer. Most data values are assumed to have a Poisson distribution and all time-measurement errors are assumed to be insignificant.

11.2. Counting efficiency.

11.2.1. The counting efficiency of the counter for a single standard run is calculated by the counter using an external standard and an established quench correction curve.

11.3. Background.

11.3.1. Background decompositions per minute are calculated by the counter. The calculation program averages three background counts to determine the background.

11.3.2. The running average background count rate is calculated by

$$\overline{B} = \frac{\Sigma_1^3 B}{3} ,$$

where B = background count rate and
$\overline{B}$ = average background count rate.

11.3.3. The standard deviation for the average background count rate is calculated by

$$SD(\overline{B}) = \frac{3 \times \sqrt{C_b}}{\overline{B}} ,$$

where SD $(\overline{B})$ = standard deviation of the running average of the background,
$\overline{B}$ = average background from Step 11.3.2,
n = number of values used, and
C_b = gross background count.

11.4. Sample activity.

11.4.1. The activity in the samples is given by

$$A_x = (A - \overline{B}) ,$$

where A_x = net sample activity (dis/min per sample),
A = gross sample dis/min from the counter, and
$\overline{B}$ = average background from Step 11.3.2.

11.4.2. The standard deviation of the activity in the sample is given by:

$$\frac{3 \times \sqrt{A_x}}{A} ,$$

where $SD(A_x)$ = standard deviation of sample activity (dis/min) and
A = gross sample dis/min.

11.4.3. The minimum detectable activity for high-background instruments is determined to be three times the standard deviation of the background:

$$MDA = \frac{3 \times SD(B)}{K} ,$$

where MDA = minimum detectable activity (dis/min),
SD (B) = standard deviation of the background count rate (counts/min), and
K = constant in sample units.

11.5. Calculation to put the radiometric measurement into the required form for final reporting.

11.5.1. Reported activity.

$$R_x = \frac{A_x}{K \times Q} ,$$

where R_x = sample activity in correct units for reporting (pCi/L),
A_x = sample activity (dis/min),
K = conversion factor (2.22 pCi per dis/min), and
Q = sample quantity analyzed (0.0002 L).

11.5.2. The propagated uncertainty of the reported activity is

$$U_x = |R_x| \times \sqrt{SD(A_x)^2 + SD(\overline{B})^2 + \frac{SD(Q)^2}{Q^2}} ,$$

where U_x = propagated uncertainty of the reported activity,
R_x = reported activity,
$SD(A_x)$ = standard deviation of sample activity,

SD ($\overline{B}$)	=	standard deviation of the average background,
SD (Q)	=	standard deviation of the sample quantity aliquoted, and
Q	=	sample quantity aliquoted in reporting units.

12. Proper Waste Disposal Practices

12.1. After the data has been approved, discard the excess urine from Step 9.3.1 into the acid waste system.

12.2. Return excess samples from Steps 9.3.2 and 9.3.3 to Sample Management for disposal in accordance with AR 10-3.

12.3. After the data has been approved, discard excess sample from Step 9.1.4 into the acid waste system.

12.4. Store the liquid scintillation vials in a 30-gallon drum for disposal through EM-7. Dispose of the collected drum according to EM-7, SOP 21, "Scintillation Vial Disposal."

13. Resources

13.1. M. A. Tamers, "Liquid Scintillation Counting of Low Level Tritium," Packard Technical Bulletin No. 12 (June 1964).

13.2. M. A. Gautier, E. S. Gladney, and B. T. O'Malley, "Quality Assurance for Health and Environmental Chemistry: 1985," Los Alamos National Laboratory report LA-10813-MS (1986).

13.3. "American National Standard for Performance Criteria for Radiobioassay," draft, American National Standards Institute, ANSI N13.30 (1989).

13.4 L. A. Currie, "Limits for Qualitative Detection and Quantitative Determination," *Anal. Chem.* **40**, 586-593 (1968).

13.5. "Chemical, Hazardous, and Mixed Waste," Administrative Requirement 10-3, in *Environment, Safety, and Health Manual*, Los Alamos National Laboratory Manual, Chapter 1 (most recent edition).

13.6. Stan Zygmunt, EM-7, "Scintillation Vial Disposal," SOP 21, (1989).

Revisions or additions to the procedure are marked (). Where a section heading is marked, the entire section has been revised.

Program #= 5 01/05/90 13:21

REGION A: LL-UL= 0- 19 LCR= 0 BKG= .00 % 2 SIGMA= .0

REGION B: LL-UL= 2- 19 LCR= 0 BKG= .00 % 2 SIGMA= .0

REGION C: LL-UL= 0- 0 LCR= 0 BKG= .00 % 2 SIGMA= .0

TIME= 30.00 K= .033 QIP=SIE/AEC

P#	S#	Time	CPMA/K	%DEV	CPMB/K	%DEV	CPMC/K	%DEV	SIE	SIS	MIN
5	1	30.00	585.86	8.30	537.37	8.67	.00	.00	793.	26.121	32
5	2	30.00	585.86	8.30	549.49	8.57	.00	.00	789.	26.032	63
5	3	30.00	494.95	9.04	459.60	9.38	.00	.00	781.	27.242	94
5	4	30.00	429.29	9.70	416.16	9.85	.00	.00	557.	27.493	125
5	5	30.00	480.81	9.17	459.60	9.38	.00	.00	557.	27.316	157
5	6	30.00	469.70	9.27	445.45	9.52	.00	.00	558.	27.880	188
5	7	30.00	149783.	.52	137031.	.54	.00	.00	561.	13.092	219
5	8	30.00	1084.85	6.10	998.99	6.36	.00	.00	559.	20.483	250
5	9	30.00	1239.39	5.71	1149.50	5.93	.00	.00	558.	19.838	281
5	10	30.00	1144.44	5.94	1062.63	6.17	.00	.00	558.	20.602	312
5	11	30.00	487.88	9.10	463.64	9.34	.00	.00	575.	26.037	344
5	12	30.00	457.58	9.40	434.34	9.64	.00	.00	574.	26.943	375
5	13	30.00	443.43	9.55	415.15	9.87	.00	.00	576.	25.930	406
5	14	30.00	500.00	8.99	478.79	9.19	.00	.00	576.	26.611	437
5	15	30.00	454.55	9.43	428.28	9.71	.00	.00	572.	26.366	468
5	16	30.00	2546.46	3.98	2344.44	4.15	.00	.00	586.	16.822	500
5	17	30.00	458.59	9.39	439.39	9.59	.00	.00	574.	27.297	531
5	18	30.00	446.46	9.51	424.42	9.76	.00	.00	566.	27.158	562
5	19	30.00	505.05	8.94	486.87	9.11	.00	.00	573.	26.746	593
5	20	30.00	459.60	9.38	423.23	9.77	.00	.00	569.	26.180	624

Fig. 1. Tritium counting data sheet.

TRITIUM IN URINE (T_2O or TOH) — DISTILLATION PROCEDURE

Analyte: Tritium (Tritiated Water)	**Method No:** R240
Matrix: Urine	**Accuracy and Precision:** 100% ± 5% (mean ± 1 sigma) at the 1.0-μCi/L level
Contact Person: Margaret A. Gautier	
Minimum Detectable Activity: 0.02 μCi/L	**Acceptable Minimum Detectable Activity:** 2 μCi/L
Procedure: Liquid Scintillation Spectrometry	**Effective Date:** 01/01/81 to 01/01/89

1. Principle of Method

1.1. Tritium water distilled from the sample is pipetted directly into a liquid scintillation vial to which a scintillation solution is added.

1.2. The sample is counted in a liquid scintillation spectrometer.

2. Sensitivity and Range

2.1. The method is valid over a range limited by the counter background and the electronic resolution time of the liquid scintillation spectrometer.

2.2. For routine measurements with a 10-minute counting period, the minimum detection limit (the 95th percentile of the background distribution) is 0.02 μCi/L (with a 40-count-per-minute background) and the upper limit is 1000 μCi/L (5×10^5 counts/min).

3. Accuracy and Precision

3.1. The accuracy is 100% with a precision of ± 5% at 1.0 μCi/L.

4. Collection and Storage of Samples

4.1. Collect urine samples in specimen bottles.

4.2. Refrigerate samples prior to analysis. Retain samples until the results are reported.

5. Apparatus

5.1. Aluminum block: 5.08- by 5.08- by 45.72-cm with ten 3.17- by 4.0-cm holes.

5.2. Sea sand: placed in bottom of block holes.

5.3. Strip heater: 500-watt, attached to the bottom of the block.

5.4. Round bottom flasks: 2.85-cm diameter with 4.44-cm neck and female No. 18 semiball joint (Fig. 1).

5.5. Air condenser: 17.78 cm long with male No. 18 semiball joint (Fig. 1).

5.6. Ball joint clamps (Fig. 1).

5.7. Boiling chips.

5.8. Eppendorf pipette: 200-μL, with disposable tips.

5.9. Glass scintillation-counting vials: 25-cm^3, with plastic caps.

5.10. Packard Scintillation Counter: Model 3320.

6. Reagents

6.1. Scintillation solution, Insta - Gel (Packard Instrument Company Inc., Catalogue No. 6002177), or other similar commercial product. Evaluate each new lot number to assure reproducibility of results.

6.2. Low-background water. Obtain from a water source free of radionuclide contamination.

7. Calibration and Standards

7.1. An NBS tritium standard reference material in water is used as the primary standard. (NBS-SRM-4927-B)

7.2. Prepare the secondary tritium standard so that a 200-μL aliquot will be in the range of 20-60 μCi/L. Calibrate it against the NBS standard reference material.

8. Procedure

8.1. Pipette a 200-μL aliquot of the secondary tritium standard, using an Eppendorf pipette, into a scintillation vial. Label the vial cap "Standard."

8.2. Prepare a blank with 200 μL of low-background water. Label the vial cap "Blank."

8.3. Pour approximately 2 cm^3 of sample into a round bottom flask.

8.4. Add boiling chips.

8.5. Clamp flask to condenser and place in preheated 140°C aluminum block.

8.6. Place a glass scintillation vial under the condenser to hold the distilled liquid.

8.7. Pipette 200 μL of the distilled sample into a scintillation vial, using an Eppendorf pipette and a new tip for each sample. Label the vial cap with the sample number.

8.8. Add 10 cm^3 of scintillation solution to each sample, standard, and blank vial.

8.9. Shake each vial vigorously and wipe off the outside with a tissue.

8.10. Submit the samples to the count room for liquid scintillation counting.

8.11. All standards, blanks, and samples are cooled in the counter at 9°C for 30 minutes prior to counting to reduce the effect of photoluminescent and chemiluminescent reactions.

8.12. Samples are counted for 10 minutes.

9. Operation of the Instrument

9.1. Refer to the operating manual for the Packard Tri-Carb Liquid Scintillation Counter.

10. Calculations

10.1. The total counts for each sample are printed on paper tape and the following calculations are made.

10.1.1. Determining the counter efficiency.

$$E = \frac{C_s - C_b}{T \times A}$$

where E = efficiency of the counter
C_s = counts per 200 μL of standard
C_b = counts per 200 μL of background water
T = count length in minutes
A = activity (dis/min per 200 μL of standard)

10.1.2. Determining the concentration of tritium in the sample.

$$\mu Ci/L = \frac{(C_u - C_b) \times 1000\ cm^3}{V \times T \times E \times K}$$

where C_u = counts of the unknown
C_b = counts of the background
V = sample size of the unknown in cm^3
T = count length in minutes
E = efficiency of the counter
K = 2.22×10^6 (to convert dis/min to μCi)

11. Reporting of Results

11.1. Report results less than 1 μCi/L as < 1 μCi/L.

11.2. Report positive results >1 μCi/L to one significant figure to the right of the decimal point.

12. Source Material

12.1. M. A. Tamers, "Liquid Scintillation Counting of Low Level Tritium," Packard Technical Bulletin No. 12 (June 1964).

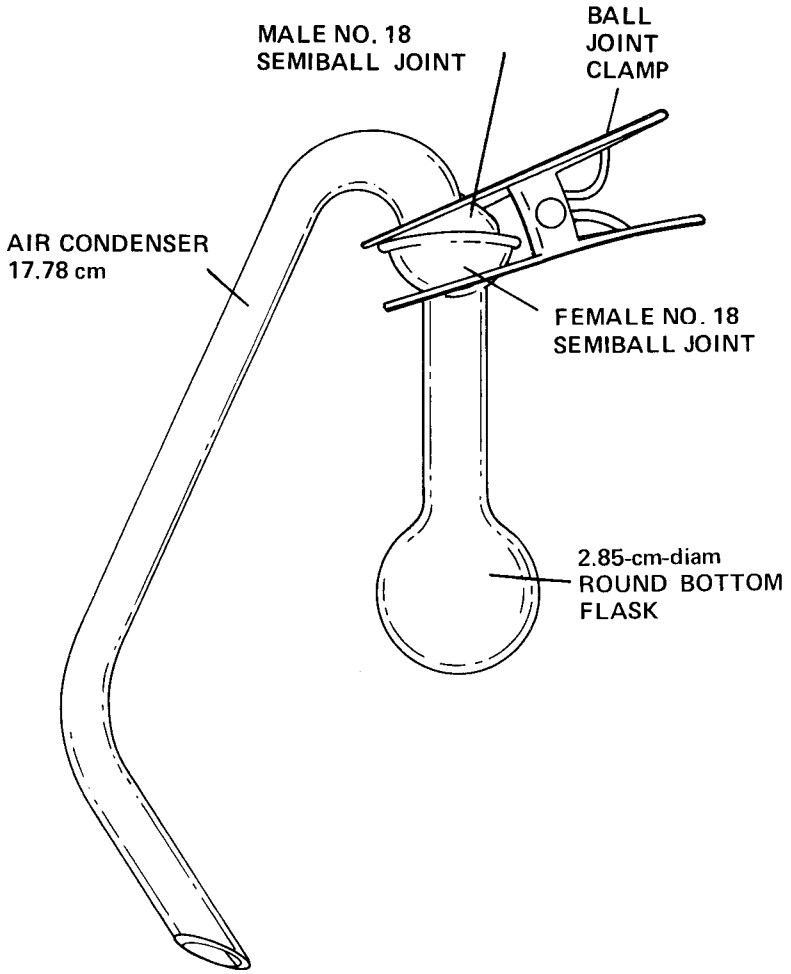

Fig. 1. Distillation apparatus.

URANIUM — DELAYED NEUTRON COUNTING

Analyte: ^{235}U and ^{238}U	**Method No.:** R250
Matrix: Urine, water **Procedure:** Delayed-neutron counting	**Accuracy and Precision:** ^{235}U 96% ±6% (mean ± 1 sigma) ^{238}U 93% ±8% (mean ± 1 sigma)
Minimum Detectable Activity: ^{235}U pCi/L (93% enrichment) ^{238}U μg/L (depleted 0.17% ^{235}U)	**Acceptable Minimum Detectable Activity:** ^{235}U 2 pCi/L ^{238}U 5 μg/L
Effective Date: 01/01/78	**Author:** William D. Moss Harold M. Ide

SAFETY NOTE: Before beginning this procedure, read all of the Material Safety Data Sheets for the chemicals listed in Sec. 7. Read Sec. 4.3 of the EM-9 Safety Manual for information on personal protective clothing and equipment.

1. Principle of Method

1.1. Counting the delayed neutrons resulting from fission of uranium after irradiation by thermal neutrons in a nuclear reactor.

1.2. The method is only sensitive to ^{238}U. Uranium-238 can be obtained only if the $^{238}U/^{235}U$ ratio is known or assumed.

2. Sensitivity

2.1. 2 pCi/L ^{235}U at 93% enrichment

2.2. 4 μg/L ^{238}U at 0.17% enrichment.

3. Accuracy and Precision

3.1. Uranium-235. This is the total uranium alpha activity including activity from ^{234}U and ^{238}U, assuming an isotopic distribution in the sample equal to SRM 930 (^{235}U=93.3%, ^{234}U=1.08%, ^{238}U=5.38%; 93% enriched ^{235}U will contain 69 pCi/μg).

Expected:	5.2 pCi/L	13.8 pCi/L	26.1 pCi/L
Measured:	5.1	13.8	24.0
Precision:	±0.4	±0.6	±1.6

3.2. Uranium-238. This is the concentration of ^{238}U assuming that the sample contains 0.17% of ^{235}U and 99.83% of ^{238}U.

Expected:	4.2 μg/L	8.5 μg/L	16.9 μg/L
Measured:	4.1	7.9	16.3
Precision:	±0.3	±0.4	±0.5

4. Interferences

4.1. Samples with greater than 200 μg of normal uranium (depleted, 0.17% ^{235}U) produce greater than 100,000 neutron counts and introduce deadtime losses in the neutron-counting system.

4.2. Plutonium-239 also undergoes fission but is not an interference unless the levels are in excess of 300 pCi/L.

4.3. Samples leaking will cause contamination of the pneumatic transfer system at the reactor.

5. Collection and Storage of Samples

5.1. Samples are collected biweekly in clear, high-impact-plastic, 120-mL containers. Los Alamos National Laboratory, Stock Number LG-3739.

5.2. Add 10 mL of HNO_3 per liter of sample and refrigerate pending analysis. Retain samples until the results are reported.

6. Apparatus

6.1. Heat-sealable pouches: 2-mil, 4-in. by 6-in., 8-oz size, 100 per package. Scotchpak Brand, Kapak Corporation, 5305 Parkdale Drive, St. Louis Park, Minnesota 55416.

6.2. Counting vials: polyethylene, 25-mL, screw cap, Los Alamos National Laboratory, Stock Number LG3713/4II-4S.

6.3. Drying Tray: 8-in. by 12-in. Pyrex pan with a Teflon insert to prevent the pouches from adhering to the Pyrex surface.

6.4. Rack: specially fabricated to support the pouches during evaporation.

6.5. Graduated cylinder: 25-mL.

7. Reagents

7.1. None required.

8. Calibration and Standards

8.1. Preparation of primary standards.

8.1.1. Prepare a ^{235}U standard solution equal to approximately 2.5 pCi/mL (93% enrichment) from NIST standard reference material, NIST SRM U930.

8.1.2. Prepare a ^{238}U standard solution equal to 1000 μg/L (0.72% ^{235}U) from NIST standard reference material, NIST SRM U950a.

8.2. Preparation of the calibration curve in blank urine.

8.2.1. Prepare a ^{235}U standard curve in concentrations from 0 pCi/L to 50 pCi/L when a 2.5-pCi/mL solution is used.

8.2.1.1. Calculation of the pCi/50 μL.

$$\frac{2.5 \text{ pCi} \times 0.05 \text{ mL}}{1 \text{ mL}} = 0.125 \text{ pCi/0.05 mL (50 } \mu\text{L)} \quad .$$

8.2.1.2. Conversion of pCi/25 mL of spike to pCi/L of urine.

$$\frac{0.125 \text{ pCi} \times 1000 \text{ mL}}{25 \text{ mL} \times 1 \text{ L}} = 5.0 \text{ pCi/L} \quad .$$

Volume of Standard	pCi/L
0 μL	0.0
50 μL	5.0
100 μL	10.0
250 μL	25.0
400 μL	40.0
500 μL	50.0
0 μL	0.0

8.2.2. Prepare a ^{238}U standard curve in concentrations from 0 μg/L to 50 μg/L when a 1-μg/mL standard is used.

8.2.2.1. Calculation of the $\mu g/50\ \mu L$ aliquot of standard.

$$\frac{1\ \mu g \times 0.05\ mL}{1\ mL} = 0.05\ \mu g/0.05\ mL\ (50\ \mu L) \quad .$$

8.2.2.2. Conversion of the $\mu g/25$ mL of spike to $\mu g/L$ of urine.

$$\frac{0.05\ \mu g \times 1000\ mL}{25\ mL \times 1\ L} = 2.0\ \mu g/L \quad .$$

8.2.2.3. The ^{238}U primary standard (Step 8.4.2) is used rather than preparing a 0.17% enriched ^{238}U standard. Conversion to a calibration against 0.17% ^{238}U is achieved by multiplying the concentration of ^{238}U by 4.24.

$$\frac{0.72\%}{0.17\%} = 4.24 \quad .$$

Volume of Standard	Normal (0.72% ^{235}U) $\mu g/L$	Depleted (0.17% ^{235}U) $\mu g/L$
0 μL	0	0.0
25 μL	1	4.24
50 μL	2	8.48
100 μL	4	16.96
250 μL	10	42.4
400 μL	16	67.84
0 μL	0	0.0

9. Procedure

9.1. Advance preparation.

9.1.1. Cut 4 cm off the top of each pouch.

9.1.2. Turn the pouches inside out. This allows the pouch to stay open at the top and allows for better evaporation of the sample.

9.2. Preparation of the notebook and sample numbering.

9.2.1. Arrange ^{238}U samples according to the computer work sheet. Every tenth sample is to be a water blank, alternating with 250 μL of ^{238}U standard.

9.2.2. Number serially.

9.2.3. Write down the ^{238}U calibration curve, allowing for seven samples, and continue the numbering.

9.2.4. Samples for both ^{238}U and ^{235}U are only irradiated once. Use the same sample number for the ^{235}U as was used for the ^{238}U.

9.2.5. Continue the numbering for the samples analyzed for ^{235}U only. Every tenth sample is to be a water blank, alternating with 250 μL of ^{235}U standard.

9.2.6. Write down the ^{235}U calibration curve, allowing for seven samples, and finish numbering.

9.3. Sample evaporation and packaging.

9.3.1. Quantitatively transfer 25 mL of sample from the collection container into a pouch. (The collection containers are difficult to pour from and may cause surface contamination if the sample drips down the sides.) If the volume of sample is less than 25 mL, note the volume in the laboratory notebook.

9.3.2. Serially number the pouches. Stand the pouch upright in the tray and heat to 90°C in a ventilation hood and take the sample to dryness (overnight).

9.3.3. After the sample has reached dryness, remove the pouch from the tray, roll the pouch up tightly, and insert it into a 25-mL rabbit.

9.3.4. Tightly screw on the cap and write the sample number on the cap with a permanent marking pen.

9.3.5. Repeat this process until all samples and standards are prepared.

9.3.6. Fill out the Omega West Reactor Irradiation Request (Fig.1) and deliver it along with the samples to the Omega West Reactor.

10. Calculations

10.1. A report is received form Reactor Research (INC-5) through interoffice mail (Fig. 2).

10.2. Transfer the counts listed under PEAK for each sample to the notebook.

10.3. Plot the standard curves using linear graph paper with delayed-neutron counts on the y-axis and concentration of uranium on the x-axis (Fig. 3). A computer code may be used to perform the calculations.

10.4. Determine the concentration of the samples from the standarad curve.

10.5 Measurement errors are calculated by computer code.

11. Source Material

11.1. H. M. Ide, W. D. Moss, M. M. Minor, and E. E. Campbell, "Analysis of Uranium in Urine by Delayed Neutrons," Health Phys. 36, 405 (1979).

Revisions or additions to the procedure are marked (▒▒▒▒). Where a section heading is marked, the entire section has been revised.

OMEGA WEST REACTOR IRRADIATION REQUEST

DATE AND TIME IRRADIATION TO BEGIN:_____

LOCATION (RABBIT OR PORT):_____

LENGTH OF IRRADIATION:_____

SAMPLE DESCRIPTION:_____

NAMES AND GROUP:_____

DESCRIPTION OF YOUR SAMPLE USAGE AFTER IRRADATION:_____

Fig. 1. Irradiation request.

DELAYED NEUTRON COUNTING 13-DEC-82 09:38:26

BACKGROUND 80. FACTOR 49500.

	SAMPLE	WGT.	PEAK	VALLEY	FLUX	PPB
1	1	25.00	133.	5.	71051.	1.5
2	2	25.00	119.	4.	72399.	1.1
3	3	25.00	155.	4.	71922.	2.1
4	4	25.00	83.	7.	71885.	0.1
5	5	25.00	253.	13.	72353.	4.7
6	6	25.00	119.	5.	71889.	1.1
7	7	25.00	129.	1.	71912.	1.3
8	8	25.00	122.	7.	72148.	1.2
9	9	25.00	85.	4.	71944.	0.1
10	10	25.00	132.	7.	71837.	1.4
11	11	25.00	123.	2.	71918.	1.2
12	12	25.00	145.	4.	72125.	1.8
13	13	25.00	114.	7.	71909.	0.9
14	14	25.00	108.	8.	71818.	0.8
15	15	25.00	97.	5.	71986.	0.5
16	16	25.00	93.	2.	71823.	0.4
17	17	25.00	101.	6.	71897.	0.6
18	18	25.00	80.	8.	71963.	0.0
19	19	25.00	92.	1.	71827.	0.3
20	20	25.00	382.	15.	71876.	8.3
21	21	25.00	115.	8.	72033.	1.0
22	22	25.00	103.	5.	72178.	0.6
23	23	25.00	108.	6.	71936.	0.8
24	24	25.00	102.	4.	71909.	0.6
25	25	25.00	114.	7.	72001.	0.9
26	26	25.00	164.	8.	71815.	2.3
27	27	25.00	105.	5.	71918.	0.7
28	28	25.00	242.	7.	71924.	4.5
29	29	25.00	73.	4.	71847.	-0.2
30	30	25.00	219.	15.	71899.	3.8
31	31	25.00	175.	4.	72014.	2.6
32	32	25.00	192.	9.	72226.	3.1
33	33	25.00	97.	5.	72382.	0.5
34	34	25.00	145.	6.	72172.	1.8
35	35	25.00	112.	4.	72256.	0.9
36	36	25.00	222.	11.	71965.	3.9
37	37	25.00	390.	20.	71348.	8.6
38	38	25.00	524.	20.	71991.	12.2
39	39	25.00	98.	4.	71738.	0.5
40	40	25.00	97.	5.	71781.	0.5
41	41	25.00	217.	15.	71828.	3.8
42	42	25.00	86.	7.	71705.	0.2
43	43	25.00	168.	12.	71838.	2.4
44	44	25.00	348.	20.	71985.	7.4

Fig. 2. Omega West Reactor report.

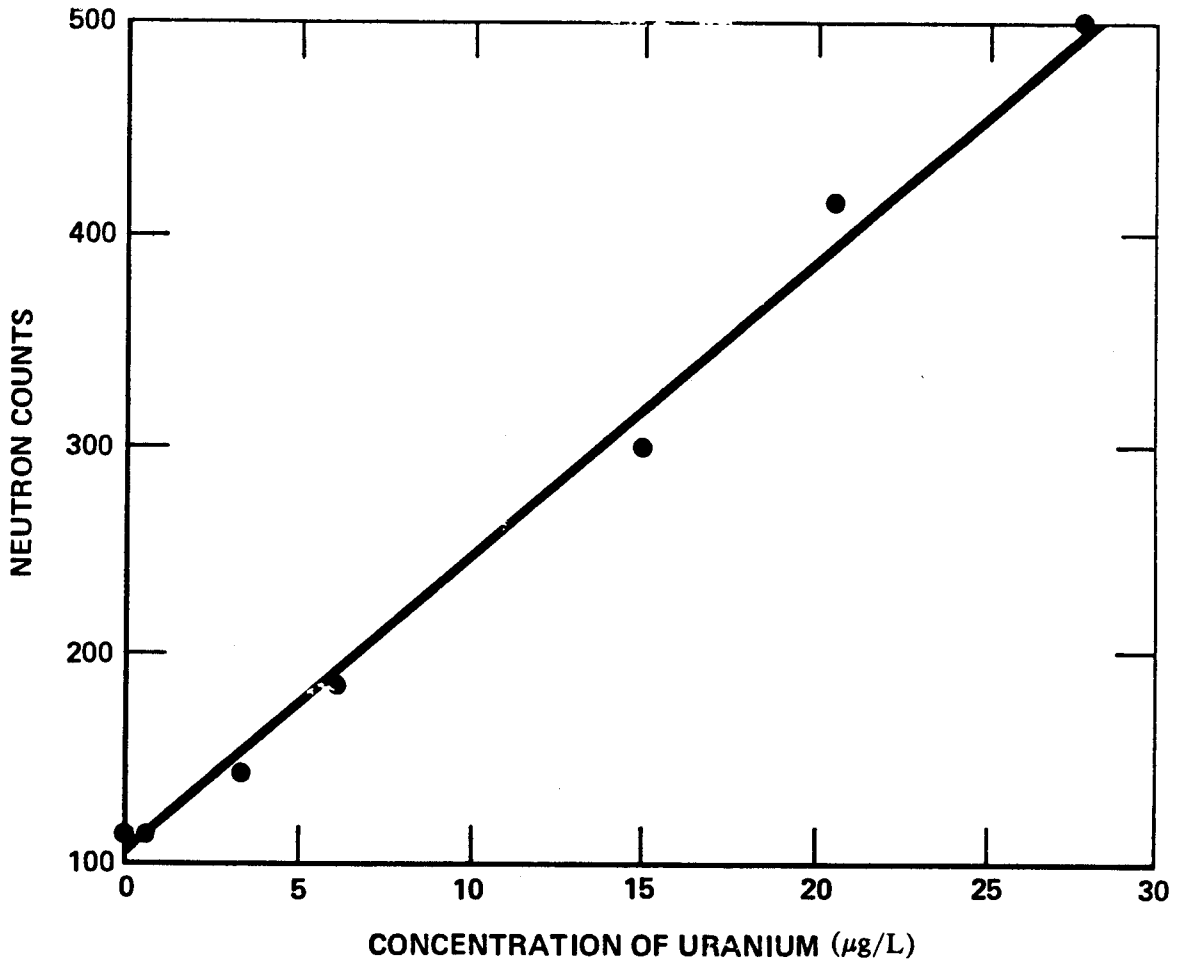

Fig. 3. Uranium calibration curve.

URANIUM IN URINE — ANION EXCHANGE AND RADIOMETRIC PROCEDURE

Analyte: Uranium (Enriched)	**Method No:** R260
Matrix: Urine	**Accuracy and Precision:** 83% ± 10% (mean ± 1 sigma) at 1 pCi/50 cm^3
Contact Person: William D. Moss	
Minimum Detectable Activity: 1.0 pCi/L (0.05 pCi/50 cm^3)	**Acceptable Minimum Detectable Activity:** 2 pCi/L
Procedure: Anion Exchange and Alpha Phosphor Scintillation Counting	**Effective Date:** 10/01/82 to 01/01/89

1. Principle of Method

1.1. Concentrated HCl is added to the sample.

1.2. Uranium is separated by anion exchange.

1.3. Uranium alpha activity is measured.

2. Sensitivity

2.1. Sensitivity is limited by the counter background.

2.2. For routine measurements with a 60,000-second counting period and a counting efficiency of 50%, the minimum detection limit (the 95th percentile of the counter background distribution) is 0.05 pCi per 50-cm^3 sample.

3. Accuracy and Precision

3.1. The average recovery of samples spiked with 1 pCi/50 cm^3 is 83% ± 10%.

4. Collection and Storage of Samples

4.1. Collect samples in clear, high-impact-plastic, 120-cm^3 containers.

4.2. Refrigerate samples prior to analysis. Retain samples until the results are reported.

5. Apparatus

5.1. Beakers: 25-cm^3 and 250-cm^3.

5.2. Ion exchange columns: Fig. 1.

5.3. Stainless steel disks: 2.2-cm (7/8-in.) disk fabricated from 15- to 20-mil 316 stainless steel, cold rolled or No. 4 finish.

5.4. Liquid scintillation vials.

5.5. Hot plates.

5.6. Filter paper: Whatman No. 541 and No. 41.

6. Reagents

6.1. Hydrochloric acid (concentrated).

6.2. Nitric acid (concentrated).

6.3. Bio-Rad anion exchange resin (AG 1-X4, 100-200 mesh).

6.4. Glass wool.

6.5. Tetrahydrofuran.

6.6. Glacial acetic acid.

6.7. Hydrochloric acid (9 M). Mix 1500 cm^3 of concentrated HCl with 500 cm^3 of H_2O.

6.8. Hydrochloric acid (1%). Mix 5 cm^3 of concentrated HCl with 500 cm^3 of H_2O.

6.9. Acetic acid solution (90%). To 180 cm^3 of glacial acetic acid, add 20 cm^3 of H_2O and stir.

6.10. Nitric acid (1 M). Dilute 12 cm^3 of concentrated HNO_3 to 200 cm^3 with H_2O.

7. Calibration and Standards

7.1. Prepare a ^{235}U standard solution equal to approximately 1000 pCi/L (93% enrichment) from NBS standard reference material, NBS-SRM-U930.

7.2. Dissolve a known amount of uranium oxide in HCl and dilute to volume in a volumetric flask.

7.3. Analyze a blank urine sample with each set of unknowns to determine the analytical background.

8. Procedure

8.1. Add 50 cm^3 of urine to a 250-cm^3 beaker.

8.2. Add 50 cm^3 of concentrated HCl or a volume equal to the sample volume if less than 50 cm^3.

8.3. Add 0.2 cm^3 of 30% H_2O_2.

8.4. Heat on a hot plate with a surface temperature of 125-150°C for 45-60 minutes. If the solution is still a dark brown color after the first 30 minutes of heating, add another 0.2 cm^3 of 30% H_2O_2.

8.5. Remove from the hot plate and add 50 cm^3 of concentrated HCl. Cool to room temperature.

8.6. Put a plug of glass wool into the bottom of the 50-mm anion exchange column and fill the column with AG 1-X4, 100-200 mesh, chloride form anion exchange resin. Wash the column with H_2O until the resin column maintains a constant level.

8.7. Wash the column with 50 cm^3 of 9 M HCl.

8.8. Filter the sample through a Whatman No. 541 paper onto the anion exchange column.

8.9. After all of the original sample has passed through the column, wash the beaker twice with 9 M HCl and add the wash to the column.

8.10. Wash the filter paper with 9 M HCl and remove the filter funnel from the column.

8.11. Wash the column reservoir twice with 9 M HCl.

8.12. Wash the column reservoir four times with tetrahydrofuran. Let the solution drain down to the top of the resin column between each wash.

8.13. Add 10 cm^3 of 90% acetic acid solution to the column and let the solution flow through the column.

8.14. Wash the column reservoir four times with 9 M HCl. Let the solution drain to the top of the resin column between each wash.

8.15. Place a 25-cm^3 beaker under the column.

8.16. Wash down the column reservoir three times with 7-8 cm^3 of 0.1 M HCl.

8.17. Place the beaker on a hot plate with a surface temperature of 120-150°C and evaporate the solution to dryness.

8.18. Remove the beaker from the hot plate and add 0.5 cm^3 of 1 M HNO_3. Wait 5 minutes.

8.19. Transfer the HNO_3 solution from the beaker to a stainless steel disk.

8.20. Evaporate the solution on the stainless steel disk to dryness.

8.21. Repeat Steps 8.18. and 8.20. two more times.

8.22. Prepare the disks for alpha phosphor scintillation counting.

8.22.1. Place a 2.86 cm of No. 41 Whatman filter paper on a molded nylon disk.

8.22.2. Place the stainless steel disk with the sample over the filter paper. Be sure these are centered.

8.22.3. Place a phosphor disk exactly in position on top of the stainless steel disk.

8.22.4. Put a strip of Mylar film over this and clamp it in place with the outer nylon ring.

8.22.5. Cut off the excess Mylar with scissors.

8.22.6. Put the sample number on the back of the assembly.

8.22.7. Count in an alpha scintillation counter for 60,000 seconds.

9. Alternate Procedure for Measuring Samples with Greater Than 5 pCi

9.1. Replace the beaker in Step 8.15. with a liquid scintillation vial.

9.2. Wash down the column reservoir three times with 6 cm^3 of 0.1 M HCl.

9.3. Place the vial on a hot plate with a surface temperature of 120-150°C and evaporate the solution to dryness.

9.4. Remove the vial from the hot plate and add 10 cm^3 of 1 M HNO_3. Wait 5 minutes.

9.5. Add 10 cm^3 of liquid scintillation cocktail.

9.6. Cap the vial and shake to mix for 3-5 minutes.

9.7. Count the sample for 100 minutes in a liquid scintillation counter.

9.8. Prepare three reagent blanks by adding 10 cm^3 of 1 M HNO_3 and 10 cm^3 of liquid scintillation cocktail to three vials.

10. Calculations

10.1. Alpha phosphor scintillation counting.

$$pCi/L = \frac{(C_s - C_b) \times 1000}{V \times T \times E \times R_c \times K}$$

where C_s = counts of the sample
C_b = counter background
V = sample size of the unknown in cm^3
T = count length in minutes (1000)
E = efficiency of the counter 0.5
R_c = chemical recovery (0.83 mean from QC Studies)
K = 2.22 (to convert dis/min to pCi)

10.2. Liquid scintillation counting.

$$pCi/L = \frac{(C_s - C_b) \times 1000}{V \times T \times E \times R_c \times K}$$

where C_s = counts of the sample
C_b = counts of the reagent blanks
V = sample size of the unknown in cm^3
T = count length in minutes (100)
E = efficiency of the counter 1.0
R_c = chemical recovery (0.83)
K = 2.22 (to convert dis/min to pCi)

11. Source Material

11.1. I. A. Dupzyk and R. J. Dupzyk, Health Phys. **36**, 526-529 (1979).

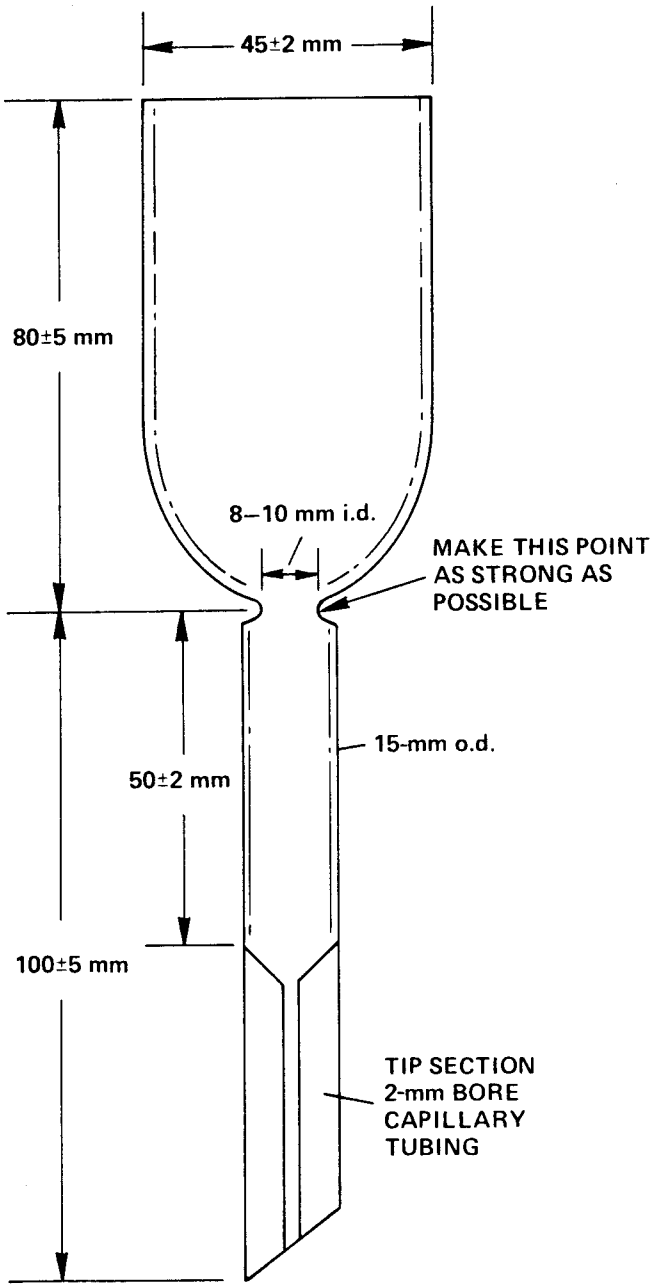

Fig. 1. Ion exchange column for uranium.

URANIUM (ISOTOPIC) IN URINE—ALKALINE EARTH PHOSPHATE AND ALPHA SPECTROMETRY

Analyte: ^{234}U, ^{235}U + ^{236}U, and ^{238}U	**Method No.:** R261
Matrix: Urine	**Minimum Detectable Activity:** 0.03 pCi per sample for each isotope
Procedure: Coprecipitation and alpha spectrometry	**Accuracy and Precision:** For natural, enriched, and depleted U, concentrations of ^{234}U and ^{238}U are accurate to better than 2%. ^{235}U + ^{236}U shows a small positive bias due to tailing of the large ^{234}U peak. Isotope ratios for normal and depleted U are generally accurate to better than 3%. Precision varies with the level of activity.
Acceptable Minimum Detectable Activity: 0.10 pCi/L	
Effective Date: 07/01/91	**Authors:** Steve Goldstein Gloria Martinez

SAFETY NOTE: Before beginning this procedure, read all of the Material Safety Data Sheets for the chemicals listed in Sec. 7. Read Sec. 4.3 of the EM-9 Safety Manual for information on personal protective clothing and equipment. Read Sec. 11 of this procedure and Source Materials 12.4 to 12.8 for proper waste disposal practices.

1. Principle of Method

1.1. Samples are equilibrated overnight with ^{232}U tracer in 3% nitric acid at 120°C.

1.2. Uranium is coprecipitated with calcium phosphate. The precipitate is dissolved in 8 M HCl and the uranium is adsorbed onto AG1-X8 anion-exchange resin.

1.3. Uranium is eluted from the column with a 0.36 M HCl + 0.01 M HF solution.

1.4. Uranium is electrodeposited on a stainless-steel disk.

1.5. The alpha activity is determined by alpha pulse-height analysis. Uranium-232 tracer is used to correct for chemical loss.

2. Sensitivity

2.1. Sensitivity is limited by the counter background obtained from analyses of chemistry blanks. On the 112-alpha counting system, chemistry blanks for

counting periods of 70,000 s are: ^{234}U = 4 counts, ^{235}U = 3 counts, and ^{238}U = 2 counts.

2.2. For routine measurements with a 70,000-s counting period, an average background per isotope of 3 counts, a chemical recovery of 60%, and a counting efficiency of 22%, the MDA is 0.03 pCi/sample for each isotope of uranium.

3. Accuracy and Precision

3.1. "Blank" urine spiked with a solution prepared from NIST SRM 4321, a natural U standard solution. Expected values for absolute isotopic concentrations are known to 0.5%. Precision is 2σ of the mean of 6 replicates.

	^{234}U	^{235}U	^{238}U	$^{234}U/^{238}U$	$^{235}U/^{238}U$
		(values in pCi)			
Measured value	4.863	0.223	4.685	0.953	0.0486
Uncertainty	0.185	0.030	0.150	-	-
Expected value	4.892	0.236	4.666	0.963	0.0460
Uncertainty	0.020	0.001	0.019	-	-
Accuracy	99.6%	105.6%	100.6%	99.0%	105.6%
Precision	±3.2%	±13.6%	±3.8%	5.0%	14.1%

3.2. "Blank" urine spiked with a solution prepared from NIST SRM U-930, a 93% enriched ^{235}U standard. Expected values for absolute isotopic concentrations are known to 10%. Precision is 2σ of the mean of 4 replicates. The positive bias on the abundance of ^{235}U + ^{236}U is due to the low-energy tail of the large ^{234}U alpha peak.

	^{234}U	$^{235}U+^{236}U$	^{238}U	$^{234}U/^{235}U+^{236}U$
		(values in pCi)		
Measured value	8.700	0.327	0.023	26.57
Uncertainty	0.140	0.018	0.012	-
Expected value	8.532	0.275	0.011	31.13
Uncertainty	0.853	0.028	0.001	-
Accuracy	102.0%	119.0%	-	85.4%
Precision	±1.6%	±5.5%	-	5.7%

3.3. "Blank" urine spiked with a depleted uranium (0.17% ^{235}U) solution prepared from NIST SRM U-005 and NIST SRM U-0002. Expected values for absolute isotopic concentrations are known to 1%. Precision is 2σ of the mean of 4 replicates.

	^{234}U	$^{235}U+^{236}U$	^{238}U	$^{234}U/^{238}U$	$^{235}U+^{236}U/^{238}U$
			(values in pCi)		
Measured value	0.598	0.059	4.035	0.148	0.979
Uncertainty	0.024	0.010	0.153	-	-
Expected value	0.600	0.057	3.954	0.152	0.954
Uncertainty	0.006	0.001	0.040	-	-
Accuracy	99.7%	103.5%	102.0%	97.7%	102.6%
Precision	4.0%	16.9%	3.8%	5.5%	17.4%

3.4. Comparison of precipitation vs. total matrix destruction (dry ashing) of a metabolized uranium sample. Listed values are the averages of two determinations for each method.

	^{238}U	
Measured value, precipitation	0.835	pCi/kg
Measured value, ashing	0.816	pCi/kg

4. Interferences

4.1. Neptunium(V,VI) and Pu(VI) are adsorbed along with U(VI) onto the anion-exchange resin in 8 M HCl and desorbed in dilute HCl. Consequently, ^{239}Pu and ^{240}Pu at 5.15 MeV are possible interferences on the ^{232}U peak, and additional chemistry is required to remove these isotopes if abundances are high (pCi levels). Neptunium-237 is also a potential interference at 4.8 MeV on the ^{234}U alpha peak.

4.2. The anion-exchange chemistry will not separate iron(III) from uranium. Because the iron will electroplate with the uranium and potentially degrade the alpha spectrum, samples with high levels of iron should be treated to remove iron by using a somewhat more elaborate ion-exchange separation involving sulfuric acid. See Step 9.4.9.

4.3. Since the daughters of ^{232}U, (^{228}Th, ^{224}Ra, etc.) will grow into the sample after chemistry, electrodeposition and counting should not be delayed for more than 10 days after ion exchange.

5. Collection and Storage of Samples

5.1. Samples are collected biweekly in a square 500-mL polyethylene container, Nalgene 2114-0016.

5.2. Samples are refrigerated until ready for analysis.

6. Apparatus

6.1. Alpha spectrometer: equipped with 300-mm^2 PIPS silicon surface barrier detectors. 512 channels/detector, at 20 keV/channel to provide adequate resolution of ^{235}U and ^{238}U.

6.2. Beakers: Pyrex 100 mL.

6.3. Coin holders: Grisby Bros., 817 N.E. Madroma, Portland, Oregon 87211, to hold disks after plating.

6.4. Electrodeposition apparatus: DC power supply to provide 600 mA of regulated current to each electrolytic cell.

6.5. Electrolytic cell: polyethylene cell body 2.22-cm o.d. by 9.0-cm long threaded on one end, and a stainless steel cap threaded to fit and hold 1.59-cm-diam stainless-steel disk in place.

6.6. Graduated cylinders: 10-, 50-, 1000-, and 4000-mL.

6.7. Hot plates: 1000-watt adjustable to 200°C.

6.8. Ion exchange columns: Bio-Rad Econo-Pac disposable columns with bed volume of 20 mL, fitted with a Nalgene 80-mm polyethylene powder funnel (Nalgene # 4252-0080) as a 100-mL reservoir.

6.9. Teflon bottles: wide-mouth, 1000-mL, VWR # 16128-535.

6.10. Stainless-steel disks: 1.59-cm (5/8 in.) disk, fabricated from 15- to 20-mil 316 stainless steel, cold rolled or No. 4 finish.

6.11. Fume hood with sink.

6.12. Polyethylene wash bottles: 500-mL and 1-L.

6.13. Filter paper: 15.0-cm, Whatman 541.

6.14. Dispensette bottles: 10- and 20-mL.

6.15. Eppendorf pipettor and pipette tips: 200-, 600-, and 1000-μL.

6.16. pH Paper: Colorphast, pH 0-14, EM Reagents.

6.17. Centrifuge: IEC Clinical Model, with fixed-angle rotor to hold six 50-mL tubes.

6.18. Centrifuge tubes: disposable, graduated, conical 50-mL, with attached screw caps, VWR # 21008-474.

6.19. Watch glass: 80-mm diam.

6.20. Transfer pipettes: 1-mL graduation, SAMCO #222.

6.21. Polyethylene dropping bottle: 125-mL capacity.

7. Reagents

7.1. Nitric acid (concentrated, 70%).

7.2. ^{232}U tracer (2-4 pCi/mL). Prepared from NIST SRM 4324 and calibrated using NIST SRM 4321 natural U standard solution.

7.3. Calcium nitrate solution. Dissolve 453 g of $Ca(NO_3)_2 \cdot 4H_2O$ and dilute to 450 mL with distilled water. Filter the solution through Whatman 541 filter paper.

7.4. Phosphoric acid (85%, specific gravity 1.70).

7.5. Hydrogen peroxide solution (30%).

7.6. Ammonium hydroxide solution (concentrated, 28-30%).

7.7. Hydrochloric acid (concentrated, 36-38%).

7.8. Hydrochloric acid (8 M). Prepare 4 L by adding 2.667 L concentrated hydrochloric acid to 1.333 L distilled water.

7.9. Bio-Rad anion exchange resin (AG1-X8, 100-200 mesh, chloride form). Add 500 mL of 0.6 M HCl to one pound of resin in a 1-L polyethylene bottle, shake thoroughly, allow to settle, and decant the solution along with the fines. Repeat 5 times.

7.10. Eluting solution (0.36 M HCl-0.01 M HF). Dilute 120 mL concentrated HCl and 920 mg ammonium bifluoride to 4 L with distilled water.

7.11. Sulfuric acid (9 M). Mix equal volumes of concentrated sulfuric acid (95-98%) and distilled water.

CAUTION: Dilution is highly exothermic and should be done in Pyrex. Store in a 500-mL polyethylene bottle.

7.12. Thymol blue solution. Mix 0.2 g of thymol blue powder with 21.5 mL of 0.02 M NaOH and dilute to 500 mL with distilled water.

7.13. Sulfuric acid (0.18 M). Add 5 mL of concentrated sulfuric acid to 495 mL of distilled water. Store in a 500-mL polyethylene bottle.

7.14. Sodium hydroxide (25%).

7.15. 8 M Hydrochloric acid - 3 M sulfuric acid solution. Add 667 mL of hydrochloric acid and 166.7 mL of sulfuric acid to a 1-L flask containing 167 mL of water.

7.16. Acetone.

8. Calibration and Standards

8.1. Uranium-232 tracer.

8.1.1. Quantitatively prepare a ^{232}U tracer equal to approximately 2-4 pCi/mL from NIST standard reference material, NIST-SRM-4324. Dilute 2 g of NIST-SRM-4324 solution to 1000 mL using 2 M nitric acid (prepared from distilled nitric acid and distilled water).

8.1.2. Quantitatively prepare a ^{238}U standard solution equal to approximately 20 pCi/g from NIST standard reference material, NIST-SRM-4321. Dilute 3 g of SRM 4321 solution to 1000 mL using 2 M nitric acid (prepared from distilled nitric acid and distilled water).

8.1.3. Prepare six mixtures of the ^{232}U tracer and ^{238}U standard solution and take to dryness with 5 mL of concentrated nitric acid. Pass through a small 1-mL anion-exchange column to remove daughter isotopes from ^{232}U and electrodeposit as described in Section 9.5. The ^{232}U tracer concentration measured from calibration should equal the expected value based on NIST certification.

8.2. Calibration of the alpha spectrometer.

8.2.1. The alpha secondary standards contain the isotopes ^{241}Am, ^{239}Pu, and ^{242}Pu and are standardized in a gas flow proportional counter using the NIST ^{238}Pu (NIST-SRM-4906-B15) primary standard.

8.2.2. Calibration counts are taken for 1020 s.

8.2.3. Background counts are accumulated for each energy spectrum for each detector for 70,000 s, using plates containing procedural blanks.

8.2.4. Standard plates are prepared from NIST-SRM-4321, a natural uranium isotopic-standard, to check the linearity of the alpha spectrometer in the lower energy range of the uranium isotopes (4.3 to 5.3 MeV). For each of 16 plates, 1 mL of the diluted SRM-4321 solution from Step 8.1.2. is taken to dryness and electrodeposited, producing 16 standard plates with approximately 20 pCi each of ^{234}U and ^{238}U and a known $^{234}U/^{238}U$ activity ratio of 0.963.

9. Procedure

9.1. Sample weighing.

9.1.1. Tare weigh the 2000 g top-loading balance with an empty sample kit on the balance. (Make sure the balance is level and in calibration).

9.1.2. Place the sample kit on the balance. Record the sample weight in grams in the chemistry notebook.

9.2. Tracer-sample equilibration.

9.2.1. Shake the sample bottle to loosen any precipitate and pour the entire sample into a clean 1-L Teflon bottle.

9.2.2. Completely rinse each sample bottle with two 10-mL aliquots of 8 M nitric acid. Add the acid wash to the sample.

9.2.3. <u>This is the most important step</u>. Carefully add exactly 1 mL of ^{232}U tracer solution (4 pCi/mL).

9.2.4. Cap loosely and place on a hot plate at 120°C overnight to allow tracer and sample to equilibrate.

9.3. Calcium phosphate precipitation.

9.3.1. Remove the bottle from the hot plate.

9.3.2. Add 400 μL of calcium nitrate solution (68 mg Ca).

9.3.3. Add 1 mL of concentrated phosphoric acid.

9.3.4. Add 20 mL of hydrogen peroxide solution (30%).

9.3.5. Add 10 mL of concentrated ammonium hydroxide solution. Cap and shake sample for 5 s.

9.3.6. Check the pH of the solution using color-sensitive pH paper. The solution should be pH 8-9 and a white precipitate should be apparent.

9.3.7. If the pH is <8, add 1 mL of concentrated ammonium hydroxide, shake, and recheck the pH.

9.3.8. If the pH is >9, add 1 mL of concentrated nitric acid, shake, and recheck the pH.

9.3.9. Repeat Steps 9.3.7. and 9.3.8. until the pH is adjusted to 8-9.

9.3.10. Cap and shake the bottle again for 20 s.

9.3.11. Loosen the cap and let the precipitate settle for at least 4 h.

9.3.12. Remove the cap and carefully and slowly decant the supernatant. The remaining slurry should be approximately 100 mL in volume.

9.3.13. Shake the slurry and transfer it to new 50-mL centrifuge tubes. Place four properly balanced and tightly sealed centrifuge tubes in the centrifuge. Centrifuge at speed 7 for 1 min. Remove the tubes and decant the supernatant.

9.3.14. Repeat 9.3.13. until all sample has been centrifuged.

9.3.15. Add 25 mL of concentrated HCl to the centrifuge tube and transfer the precipitate to a Teflon bottle. Rinse the centrifuge tube with two 25-mL aliquots of 8 M HCl and transfer to the Teflon bottle. Add 1 mL of H_2O_2 to the solution.

9.3.16. Cap the Teflon bottles, swirl, and let stand on the hotplate at 120-150°C overnight.

9.4. Anion-exchange separation.

9.4.1. Securely insert a clean 80-mm funnel into a new disposable Econo-column. Mark the 10-mL level on the column with a pen and break off the column tip. Rinse the column and funnel with distilled water.

9.4.2. Insert the column into a column holder and fill the column with AG1-X8, 100-200 mesh, anion-exchange resin to the 10-mL level. Rinse any resin from the upper part of the column or funnel to the resin bed using distilled water. The resin column should maintain a constant level at 10 mL after rinsing with water.

9.4.3. Condition the column with 50 mL of 8 M hydrochloric acid.

9.4.4. Insert a folded filter paper into the funnel.

9.4.5. Add sample (75 mL) to the column through the filter paper and allow to drain.

9.4.6. Rinse the bottle with 10 mL of 8 M HCl, add it to the column, and allow to drain.

9.4.7. Carefully remove the filter paper. Wash the column with three 50-mL aliquots of 8 M HCl and allow to drain.

9.4.8. For samples with low levels of iron, proceed to Step 9.4.10.

9.4.9. Wash the column with 10 mL of 8 M hydrochloric acid-3 M sulfuric acid solution and allow to drain. Wash the column with 30 mL of 0.18 M sulfuric acid solution and allow to drain.

9.4.10. Elute the U with two 50-mL aliquots of eluting solution (0.36 M HCl-0.01 M HF). Collect in a clean 100-mL Pyrex beaker.

9.4.11. Place the beaker on a hotplate at 120-150°C and take to dryness overnight.

9.5. Electrodeposition.

9.5.1. Add 20 mL of concentrated nitric acid to the sample residue. Cover with a clean watch glass and reflux for 4 h on a hotplate set at 150°C.

9.5.2. Remove the watch glass and take the solution to dryness. The sample should be colorless.

9.5.3. Add 0.6 mL of 9 M sulfuric acid. Heat on a hotplate at 200°C until strong fumes are produced. Remove the beaker from the hotplate and let cool for 10 min.

9.5.4. Rinse the sides of the beaker with 3 mL of distilled water.

9.5.5. Add 2 drops of thymol blue indicator. The solution should turn purple.

9.5.6. Add 15% ammonium hydroxide (dilute concentrated reagent with an equal volume of water) dropwise until the solution turns salmon pink to straw yellow.

9.5.7. Assemble the electrodeposition cell. Peel the backing from a stainless steel disk, wash the disk with acetone, place the disk in the bottom depression of the cap, tightly screw a new polyethylene cell into the cap, and rinse with distilled water. Check for leaks and discard the water.

9.5.8. Add the sample solution to the cell. Rinse the sample beaker with three 1.0-mL aliquots of 0.18 M sulfuric acid and add the wash to the cell.

9.5.9. Carefully swirl the cell to homogenize the solution. Readjust the pH by adding drops of ammonium hydroxide until the solution again turns salmon pink to straw yellow (4-5 drops).

9.5.10. Rinse the electrodes on the electrodeposition rack with distilled water and dry with a towel.

9.5.11. Insert the cells into the electrodeposition rack. Cover each cell with a plastic cover.

9.5.12. Turn on the main switch of the electrodeposition unit. Connect the cathode lead to the cell cap. Set current to 600 mA.

9.5.13. Electroplate for 2.5 h.

9.5.14. Add 1 mL of 25% NaOH to the cell, and after 1-2 minutes, disconnect the cell.

9.5.15. Pour the solution out of the cell and disassemble the cell. Wash the stainless steel disk with pH = 8 water. Do not touch the surface of the disk.

9.5.16. Dry the disks in the coin holder on a hot plate. Write the sample number on the back of the disk with a marking pen and submit to the count room for alpha spectrometry.

10. Calculations

10.1. Count samples for 70,000 s.

10.2. Detector counting efficiency determination.

10.2.1. The counting efficiency of the counter for a standard run is given by:

$$E = \frac{\left(\frac{C_s}{T_s} - \overline{B}_s\right)}{A_s}$$

where E = counting efficiency in the peak of interest (counts per disintegration),

C_s = gross counts for the standard,

T_s = counting time for standard (min),
$\overline{B}_s$ = background count rate in the peak of interest, and
A_s = activity in the standard (dis/min).

10.2.2. The average counter efficiency is calculated from a running average of the last n values of individual E determinations.

$$\overline{E} = \frac{\sum_{i=1}^{n} E_i}{n}$$

where $\overline{E}$ = the running average of the counting efficiency,
n = the number of measurements used for calculation, and
E_i = the individual counting efficiencies from Step 10.2.1.

10.3. Background determination. There will be different backgrounds for the tracer (B_t), and the analyte (B_x) peaks, but the calculations will be the same.

10.3.1. Background count rate is:

$$B = \frac{C_b}{T_b}$$

where B = background count rate (counts/min),
C_b = gross counts of background, and
T_b = count time of the background (min).

10.3.2. Running average background count rate is calculated by:

$$\overline{B} = \frac{\sum_{i=1}^{n} B}{n}$$

where B = background count rate,
$\overline{B}$ = average background count rate, and
n = number of values used.

10.3.3. Standard deviation for the average background count rate is calculated by:

$$SD(\overline{B}) = \overline{B} \times \sqrt{\frac{\sum_{i=1}^{n} (B - \overline{B})^2}{(n - 1)}}$$

where $SD(\overline{B})$ = standard deviation of the running average of the background,
$\overline{B}$ = average background from Step 10.3.2.,
B = individual background count rate, and
n = number of values used.

10.3.4. The MDA of activity for low background instruments is determined by:

$$MDA = \frac{[4.65 \times SD(B_x)] + 3}{K \times T_x}$$

where MDA = minimum detectable amount (dis/min),
$SD(B_x)$ = standard deviation of the background count rate (counts/min),
K = constant in sample units, and
T_x = count time.

10.4 Tracer recovery.

10.4.1. The tracer recovery is calculated from:

$$R_t = \frac{C_t}{T_t \times E \times A_t}$$

where R_t = fraction of the tracer recovered,
C_t = total counts in the tracer peak,
T_t = count time for the tracer (min),
E = counting efficiency, and
A_t = tracer added to the sample (dis/min).

10.4.2. Standard deviation of the tracer recovery is:

$$SD(R_t) = R_t \times \sqrt{\frac{\frac{C_t}{T_t^2} + SD(B_t)}{\left(\frac{C_t}{T_t} - \overline{B}_t\right)^2} + \frac{\sigma_{A_t}^2}{A_t^2}}$$

where $SD(R_t)$ = standard deviation of the tracer recovery,
R_t = tracer recovery fraction,
C_t = counts in the tracer peak,
T_t = count time (min),
$SD(B_t)$ = standard deviation of the background in the tracer peak,
B_t = the background in the tracer peak,
σ_{A_t} = standard deviation of the known value of A_t, and
A_t = activity of the standard.

10.5. Sample activity.

10.5.1. The activity in the samples is given by:

$$A_x = \frac{\left(\frac{C_x}{T_x} - \overline{B}_x\right)}{\overline{E} \times R_t}$$

where A_x = sample activity (dis/min per sample),
C_x = gross counts of sample,
T_x = count time of sample (min),
$\overline{B}_x$ = background count rate (counts/min),
$\overline{E}$ = average counting efficiency, and
R_t = tracer recovery.

For $^{235}U + ^{236}U$;

$$A_x = \frac{\left(\frac{C_x}{T_x} - \overline{B}_x\right)}{\overline{E} \times R_t} \; 1.11$$

where the factor 1.11 corrects for ^{235}U counts in the ^{238}U region of interest.

For ^{238}U;

$$A_{238} = \frac{\left(\frac{C_x}{T_x} - \overline{B}_x\right)}{\overline{E} \times R_t} - 0.10\, A_{235+236}$$

where the factor 0.10 corrects for ^{235}U counts in the ^{238}U region of interest.

10.5.2. The standard deviation of the activity in the sample is given by:

$$SD(A_x) = |A_x| \times \sqrt{\frac{\frac{C_x}{T_x^2} + SD^2(\overline{B}_x)}{\left(\frac{C_x}{T_x} - \overline{B}_x\right)^2}}$$

where $SD(A_x)$ = uncertainty of sample activity (dis/min),
$|A_x|$ = absolute value of A_x from Step 10.5.1.,
C_x = gross counts of sample,
T_x = sample count time,
$\overline{B}_x$ = background count rate, and
$SD(\overline{B}_x)$ = standard deviation of the background.

10.6. Calculation to correct the radiometric measurement into the required form for final reporting.

10.6.1. Reported activity.

$$R_x = \frac{A_x}{K \times Q}$$

where R_x = sample activity in correct units for reporting (pCi/L),
A_x = sample activity (dis/min per sample),
K = conversion factor (2.22 pCi per dis/min), and
Q = sample quantity analyzed.

10.6.2. Propagated uncertainty of the reported activity is calculated by:

$$U_x = |R_x| \times \sqrt{\frac{SD\ (A_x)^2}{A_x^2} + \frac{SD\ (R_t)^2}{R_t^{\ 2}} + \frac{SD\ (Q)^2}{Q^2}}$$

where U_x = propagated uncertainty of the reported activity,
R_x = reported activity,
$SD\ (A_x)$ = standard deviation of sample activity measurement,
$SD(R_t)$ = standard deviation of the tracer recovery,
$SD\ (Q)$ = standard deviation of the sample quantity aliquoted,
A_x = sample activity,
R_t = tracer recovery, and
Q = sample quantity taken for analysis in reporting units.

11. Proper Waste Disposal Practices

11.1. Liquid chemical and radioactive waste.

11.1.1. All liquid chemical and radioactive wastes may be disposed of in standard acid drains.

11.2. Hazardous waste.

11.2.1. Acetone-contaminated wipers should be treated as hazardous waste and stored in a hazardous waste satellite storage area, according to Standard Operating Procedure SOP 3, "Handling and Disposal of Hazardous Materials," and Administrative Requirement AR10-3, "Chemical, Hazardous, and Mixed Waste."

11.2.2. The satellite storage area should be properly identified. Wipers should be stored in a sealed can, properly labeled as hazardous waste and the contents identified.

11.2.3. When 80% capacity is reached, a waste profile is completed and the waste management group (EM-7) is contacted for disposal.

11.3. Solid radioactive waste.

11.3.1. Sample planchets are stored for approximately one year. The planchets are then disposed of in the low-level radioactive waste according to SOP 2.

11.3.2. A waste profile form should be completed and forwarded to the EM-9 radioactive-waste coordinator for each addition of waste to the container.

11.4. Biological waste.

11.4.1. Excess urine is disposed of in standard acid drains according to Standard Operating Procedure SOP 4, "Handling Human Biological Fluids and Tissues."

11.4.2. After disposal of urine, the sink should be washed with 4 L of Clorox solution containing 50-60 mL of bleach and flushed with water.

11.4.3. The acid-rinsed urine specimen bottles should be rinsed with water and placed in the regular trash.

12. Source Material

12.1. L. A. Currie, "Limits for Qualitative Detection and Quantitative Determination," *Anal. Chem.* **40**, 586-593 (1968).

12.2. N. A. Talvitie, "Electrodeposition of Actinides for Alpha Spectrometric Determination," *Anal. Chem.* **44**, 280-283, (1972).

12.3. L. A. Currie, G. M. France III, and P. A. Mullen, "Radiochemical Determination of Uranium of Low Activity," *Health Phys.* **10**, 751-755, (1964).

12.4. "Chemical, Hazardous, and Mixed Waste," Administrative Requirement 10-3, in Environmental Chemistry Group: Environment, Safety, and Health Manual, Appendix V (most recent edition).

12.5. "Disposal of Solid Radioactive Waste from EM-9 Group Areas at TA-59, OH-1," SOP 2, in Environmental Chemistry Group: Environment, Safety and Health Manual, Appendix III (most recent edition).

12.6. "Handling and Disposal of Hazardous Materials," SOP 3, in Environmental Chemistry Group: Environment, Safety, and Health Manual, Appendix III (most recent edition).

12.7. "Handling Human Biological Fluids and Tissues," SOP 4, in Environmental Chemistry Group: Environment, Safety, and Health Manual, Appendix III (most recent edition).

12.8. "Disposal of Solid Radioactive Waste from EM-9 Group Areas at TA-59, OH-1," SOP 2 in Environmental Chemistry Group: Environment, Safety, and Health Manual, Appendix III.

URANIUM IN URINE — ANION EXCHANGE AND COLORIMETRIC PROCEDURE

Analyte: Uranium	**Method No:** R270
Matrix: Urine	**Accuracy and Precision:** 83% ± 8% (mean ± 1 sigma) at 11 μg/50 cm^3
Author: Ivan K. Kressin	
Minimum Detectable Activity: 20 μg/L	**Acceptable Minimum Detectable Activity:** 5 μg/L
Procedure: Anion Exchange and Colorimetry	**Effective Date:** 10/01/82 to 01/01/89

1. Principle of Method

1.1. Concentrated HCl is added to the sample.

1.2. Uranium is separated by anion exchange of the uranyl chloride complex ($UO_2Cl_4^{-2}$).

1.3. Uranium is measured spectrophotometrically as the arsenazo-III complex.

1.4. This procedure is used to confirm positive results greater than 30 μg/L as determined by the delayed-neutron-counting procedure (R250).

2. Sensitivity

2.1. The sensitivity of the method is 1 μg/50 cm^3 of urine.

3. Accuracy and Precision

3.1. Average recovery of the standard is 83% ± 8% at the 11-μg/50-cm^3 concentration level.

4. Collection and Storage of Samples

4.1. Collect samples in 120-cm^3, clear, high-impact-plastic containers.

4.2. Refrigerate samples prior to analysis. Retain samples until the results are reported.

5. Apparatus

5.1. Spectrophotometer: Cary, Model 14.

5.2. Beakers: 250-cm^3.

5.3. Ion exchange columns: Fig. 1.

5.4. Erlenmeyer flasks: graduated, 25-cm^3.

5.5. Absorbance cells: 2-cm.

5.6. Fluted funnels: 75-mm.

5.7. Filter paper: Whatman No. 541, 11-cm diameter.

6. Reagents

6.1. Hydrochloric acid (concentrated, specific gravity 1.18).

6.2. Bio-Rad anion exchange resin (AG 1-X4, 100-200 mesh).

6.3. Glass wool.

6.4. Tetrahydrofuran.

6.5. Glacial acetic acid.

6.6. Hydrochloric acid (9 M). Mix 1500 cm^3 of concentrated HCl with 500 cm^3 of H_2O.

6.7. Hydrochloric acid (1%). Mix 5 cm^3 of concentrated HCl with 500 cm^3 of H_2O.

6.8. Ascorbic acid solution (5%). Dissolve 2.5 g of ascorbic acid in 50 cm^3 of H_2O. Prepare fresh daily.

6.9. Bromophenol blue indicator, Eastman Kodak Co.

6.10. Bromophenol blue indicator solution (0.04%). Dissolve 80 mg of indicator in 200 cm^3 of H_2O.

6.11. Disodium ethylenediaminetetraacetic acid (EDTA).

6.12. EDTA indicator solution (0.035 M). Dissolve 2.6 g of disodium ethylenediaminetetraacetic acid in 170 cm^3 of H_2O. After all of the EDTA has dissolved, add 30 cm^3 of a 0.04% aqueous solution of bromophenol blue and mix the solution.

6.13. Arsenazo-III [0-(1,8-dihydroxy-3,6-disulfonanaphthylene-2,7-bisazo) bisbenzene-arsonic acid]. Aldrich Chemical Co., Milwaukee, Wisconsin.

6.14. Arsenazo-III solution (0.03%). Dissolve 300 mg of arsenazo-III in 200 cm^3 H_2O and 25 cm^3 of glacial acetic acid. (This should dissolve in less than 30 minutes.) Filter the solution through a Whatman No. 54 or 541 filter paper into a 1000-cm^3 volumetric flask. Wash the filter paper twice with glacial acetic acid. Dilute to 1000 cm^3 with glacial acetic acid and stir.

6.15. Acetic acid solution (90%). To 180 cm^3 of glacial acetic acid, add 20 cm^3 of H_2O and stir.

6.16 Hydrochloric acid (10%). Dilute 10 cm^3 of concentrated HCl to 100 cm^3 with H_2O.

6.17 Sodium hydroxide (25% solution). Dilute the 50% reagent solution NaOH with an equal volume of H_2O.

7. Calibration and Standards

7.1. Prepare a normal uranium standard solution equal to 10,000 μg/L (0.72% ^{235}U) from NBS standard reference material, NBS-SRM-950a.

7.2. Preparation of the calibration curve.

7.2.1. Prepare the standard curve using three concentration levels between 0 and 20 μg. Each concentration level should be prepared in duplicate.

7.2.2. Determine the slope of the calibration curve using $y = a + bx$. This may be calculated using a desk calculator programmed for linear regression.

7.2.3. The average slope value for the calibration curve obtained at Los Alamos was 21.5 ± 1.0. If the slope of the calibration curve is outside ± 2 sigma (19.5-22.5), a new calibration curve should be prepared. If the second curve is again outside the two sigma limits, a new arsenazo-III solution should be prepared.

8. Procedure

8.1. Anion exchange of uranium.

8.1.1. Analyze a blank urine sample with each set of unknowns to determine the analytical background.

8.1.2. Aliquot 50 cm^3 of urine into a 250-cm^3 beaker.

8.1.3. Add 50 cm^3 of concentrated HCl.

8.1.4. Add 0.2 cm^3 (4 drops) of 30% H_2O_2.

8.1.5. Heat the sample on a hot plate with a surface temperature of 125-150°C for 45-60 minutes. If the solution is still a dark brown color after the first 30 minutes of heating has elapsed, add another 0.1 cm^3 (2 drops) of 30% H_2O_2.

8.1.6. Remove from the hot plate and add 50 cm^3 of concentrated HCl. Cool to room temperature.

8.1.7. Put a plug of glass wool into the bottom of the 50-mm anion exchange column and fill the column with Bio-Rad, AG 1-X4, 100-200 mesh, chloride form anion exchange resin. Wash the column with H_2O until the resin column maintains a constant level. Wash the column with 25-50 cm^3 of 9 M HCl solution.

8.1.8. Filter the sample through a Whatman No. 541 paper onto the anion exchange column.

8.1.9. Wash the beaker twice with 9 M HCl and add the wash to the column after all of the original sample has passed through the column.

8.1.10. Wash the filter paper with 3-5 cm^3 of 9 M HCl. Remove the filter funnel from the column.

8.1.11. Wash the column reservoir three times with 3-5 cm^3 of 9 M HCl.

8.1.12. Wash the column reservoir four times with 3-5 cm^3 of tetrahydrofuran. Let the solution drain to the top of the resin column between each wash.

8.1.13. Add 10 cm^3 of 90% acetic acid solution to the column and allow the solution to flow through the column.

8.1.14. Wash the column reservoir four times with 3-5 cm^3 of 9 M HCl. Allow the solution to drain to the top of the resin column between each wash.

8.1.15. Add 3.0 cm^3 of 0.1 M HCl to the column. Do not add more than 3 cm^3 (one column volume).

8.1.16. Place a 25-cm^3 graduated Erlenmeyer flask under the column.

8.1.17. Elute the uranium with two 7- to 8-cm^3 increments of 0.1 M HCl into the flask.

8.2. Spectrophotometric determination of uranium as the arsenazo-III complex.

8.2.1. Add 1 cm^3 of 5% ascorbic acid solution to the Erlenmeyer flask. Swirl the flask for 15 seconds and let stand one minute.

8.2.2. Add 1 cm^3 of 0.035 M EDTA indicator solution.

8.2.3. Swirl the solution and add 25% NaOH dropwise until the solution turns blue.

8.2.4. Add 10% HCl solution dropwise until the solution turns yellow. Add two more drops.

8.2.5. Prepare three reagent blanks following Steps 8.2.1. to 8.2.4. using 10 cm^3 of H_2O and three drops of concentrated HCl.

8.2.6. The following steps must be completed on each sample before you proceed to the next sample:

8.2.6.1. Add 5 cm^3 of 0.03% arsenazo-III solution.

8.2.6.2. Dilute to 25 cm^3 with H_2O. Stopper the flask and shake to mix.

8.2.6.3. Measure the absorbance against air in a 2-cm cell at 653 nm.

9. Operation of the Spectrophotometer

9.1. Refer to the Cary, Model 14 instruction manual.

10. Calculations

10.1. Data reduction using linear regression.

10.1.1. The linear regression curve fit from the calibration data in Step 7.2.2. is used in reverse to calculate the uranium concentration in each unknown sample.

$$\mu g\ U = \frac{A - a}{b}$$

where A = absorbance
a = intercept
b = slope (21.3 is the average slope value of the calibration curve)

10.1.2. Calculating net uranium concentration.

$$\mu g\ U_{net} = \mu g_c - \mu g_b$$

where μg_c = μg from regression curve
μg_b = μg from urine blank

10.2. Data reduction using linear graph paper.

10.2.1. Plot the standard curve with the absorbance on the y-axis and concentration of U on the x-axis. See Fig. 2.

10.2.2. Determine the concentration of the samples from the standard curve.

10.2.3. Report results less than 1.0 μg/L as <1.0 μg/L.

10.2.4. Report positive results greater than 1.0 μg/L to one significant figure to the right of the decimal point.

10.2.5. Report results as μg/L.

11. Source Materials

11.1. I. A. Dupzyk and R. J. Dupzyk, Health Phys. **36**, 526-529 (1979).

11.2. S. B. Savvin, Talanta **8**, 673-685 (1961).

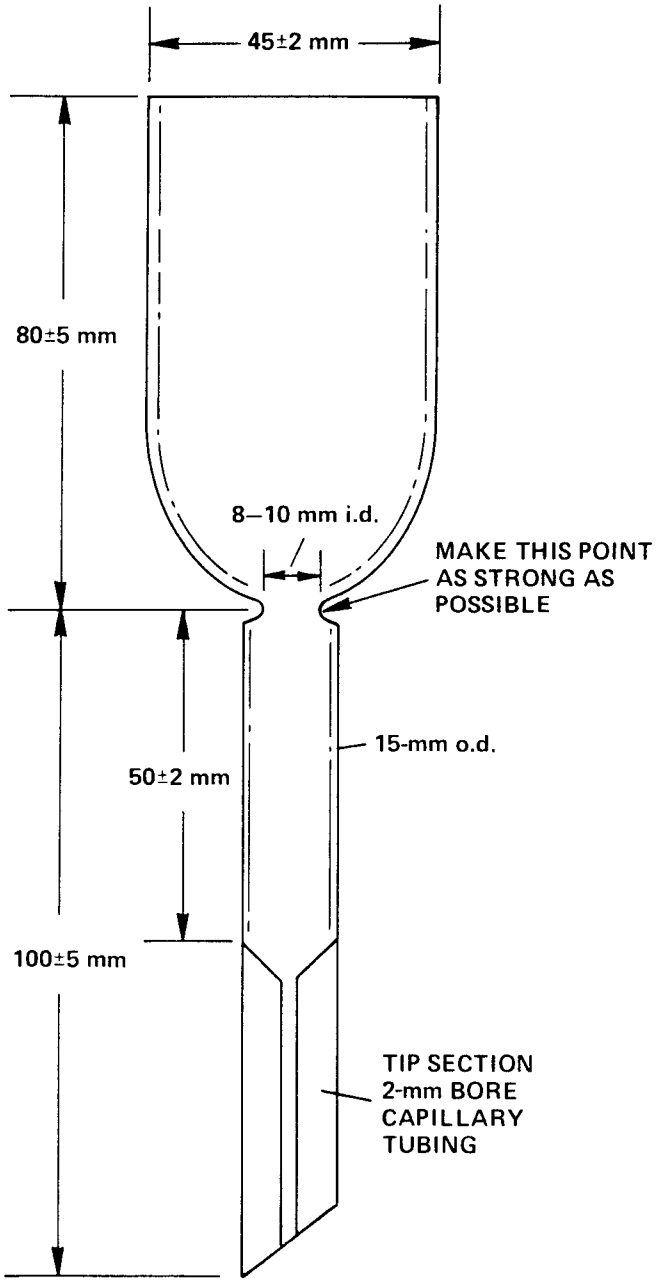

Fig. 1. Ion exchange column for uranium.

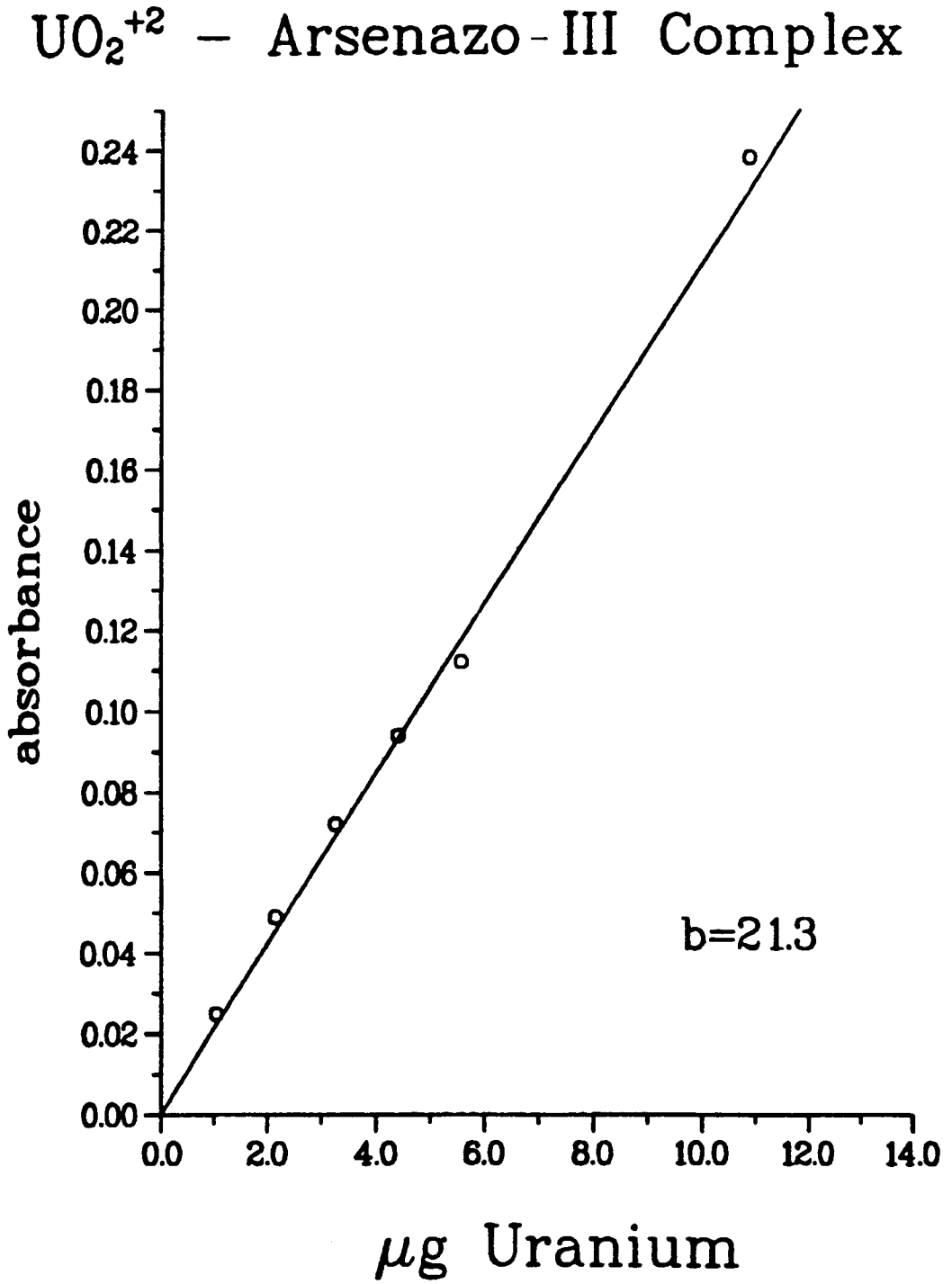

Fig. 2. Calibration curve.

URANIUM-238 FLUOROMETRIC PROCEDURE

Analyte: Uranium-238	**Method No:** R280
Matrix: Urine **Contact Person:** Margaret A. Gautier	**Accuracy and Precision:** 100% ± 4% (mean ± 1 sigma) at 20 μg/L
Minimum Detectable Activity: 1μg/L	**Acceptable Minimum Detectable Activity:** 5 μg/L
Procedure: Solvent Extraction and Fluorimetry	**Effective Date:** 01/01/76 to 01/01/89

1. Principle of Method

1.1. Uranium-238 is first separated by an alkaline earth phosphate precipitation. The precipitate is wet-ashed.

1.2. The final separation of ^{238}U is by extraction with tri-iso-octylamine (TIOA) in xylene.

1.3. A 0.2-cm^3 aliquot of the organic phase is fused into a NaF-LiF flux pellet and the concentration of the ^{238}U in the pellet is determined fluorometrically.

2. Sensitivity

2.1. For a 50-cm^3 urine sample, the sensitivity is 0.4 μg/1000 cm^3.

2.2. Extending the range of the fluorometer or using a smaller sample volume will extend the range of the method.

2.3. The ^{238}U procedure is empirical, and strict attention must be paid to each detail for reproducible and reliable results.

3. Accuracy and Precision

3.1. The accuracy and precision of the method is 100% ± 4% at 20 μg/L.

4. Interferences

4.1. Most interferences are eliminated in the TIOA solvent extraction step. One notable exception is Fe^{3+}, which is quantitatively extracted if present. The Fe^{3+} interference may be eliminated by reducing the Fe^{3+} to Fe^{2+}, using ascorbic acid, but normally urine samples do not contain enough Fe^{3+} to warrant a reduction step.

5. Collection and Storage of Samples

5.1. Collect samples in clear, high-impact-plastic, 120-cm^3 containers.

5.2. Acidify each sample with 1 cm^3 concentrated HNO_3 per liter of sample.

5.3. Refrigerate samples prior to analysis. Retain samples until results are reported.

6. Apparatus

6.1. Blast burner: Fletcher Burner available from Central Scientific Company (Catalog No. 11085), with modifications made to attain a uniform and reproducible flame of sufficient temperature (Fig. 1). Dimensions are listed below.

6.1.1. Stainless steel support ring: 0.5- by 11.1-cm i.d. by 16.5-cm o.d., with a 12.0-cm-diam lip.

6.1.2. Nicrome wire screen: 8-mesh, 12-cm o.d.

6.1.3. Brass retaining ring: 11.1-cm o.d. by 10.0-cm i.d.

6.1.4. Stainless steel plate 304: 0.7 cm thick by 10.4-cm o.d., with 488 spaced and drilled 0.3-cm-diam holes.

6.1.5. Stainless steel screen: 8-mesh, 9.3-cm diam.

6.1.6. Brass retaining ring insert: 9.5-cm o.d. by 8.9-cm i.d.

6.1.7. Stainless steel screen: 100-mesh, 9.3-cm diam.

6.1.8. Ring support pins (3).

6.1.9. Gas-mixing vents (2): 10-mil stainless steel sheet, with 0.3-cm-diam holes.

6.2. Centrifuge: International Centrifuge, Model K, capable of holding eight 90-cm^3 centrifuge tubes.

6.3. Chromalox radiant heater: Catalog No. RADZ083PIA, Edwin L. Wiegand Co., 753A Thomas Blvd., Pittsburgh, Pennsylvania, used to dry the xylene in the platinum dishes.

6.4. Didymium glasses: used to observe the molten flux in the flame.

6.5. Erlenmeyer flasks: 25-cm^3 capacity, with glass stopper.

6.6. Fluorometer: Galvanek - Morrison Fluorometer Mark V, with reflectance attachment and modified digital readout, Jarrel-Ash Co., 26 Farwell St., Newtonville, Massachusetts (Fig. 2).

6.7. Hot plate and aluminum block: capable of holding sixteen 90-cm^3 centrifuge tubes.

6.8. Pipettes: Eppendorf, with disposable tips.

6.9. Platinum dishes: fabricated at Los Alamos National Laboratory from 20-mil platinum (Fig. 3).

6.10. Sample dish adapter: anodized aluminum, cut to hold a platinum dish flush with the sample holder of the Jarrell-Ash fluorometer, with a lengthened and deepened lip depression to allow for removal of the dish with forceps.

6.11. Sodium fluoride flux dispenser: a stainless steel tube with a Teflon-tipped plunger used to transfer an exact amount of flux powder to each platinum dish (Fig. 4).

6.12. Powder blender: 2000-cm^3 capacity, used to mix the LiF-NaF flux.

6.13. Screens: 11.8-cm-diameter circular screens cut from 8-mesh, 0.041-in.-diameter nichrome wire cloth with 0.084-in. openings and 45.2% open area. Purchased from Newark Wire Cloth Co., 351 Verona Avenue, Newark, NJ 07104.

6.14. Centrifuge tubes: 90-cm^3 capacity.

7. Reagents

7.1. Ammonium hydroxide, concentrated, reagent-grade.

7.2. Calcium carrier. Saturated $Ca(NO_3)_2$ solution.

7.3. Flux (2% LiF-98% NaF). Place 350 g of NaF powder into the 2000-cm^3 powder blender and add 7 g of LiF. Seal the blender and mix for 8 hours. Complete mixing is critical.

7.4. Hydrogen peroxide, 30%, reagent-grade.

7.5. Hydrochloric acid (6 N). Add 500 cm^3 of concentrated HCl to 250 cm^3 of distilled water in a 1000-cm^3 volumetric flask. Cool and add distilled water to the 1000-cm^3 mark. Mix thoroughly.

7.6. Hydrofluoric acid, 48%, reagent-grade.

7.7. Lithium fluoride, anhydrous powder, reagent-grade.

7.8. Nitric acid, concentrated 69%, specific gravity 1.42, reagent-grade.

7.9. Phosphoric acid, concentrated 85%, reagent-grade.

7.10. Propane, commercially bottled.

7.11. Sodium fluoride, anhydrous powder, fluorometric-grade. The uranium content cannot exceed 0.5 PPB by weight of NaF. B & A, fluorometric-grade, Allied Chemical, Specialty Chemicals Division, P.O. Box 70, Morristown, New Jersey. The NaF is tested by running blanks on each lot.

7.12. Tri-iso-octylamine solution, 5% in xylene. Obtained from Bram Metallurgical Chemial Co., 245 W. Chatten Ave., Philadelphia, PA 19144.

8. Preparation of Standards

8.1. Primary standard.

8.1.1. Ignite approximately 1 g of NBS standard reference material, NBS-SRM-950b, U_3O_8 for one hour at 900°C.

8.1.2. Quantitatively transfer 0.5896 g of the U_3O_8 to a 50-cm^3 beaker with 20 cm^3 of a 1:1 dilution of HNO_3.

8.1.3. The U_3O_8 is dissolved in the acid and evaporated to near dryness.

8.1.4. Dissolve the residue (nitrate) in 10 cm^3 of a 1% HNO_3 solution and transfer quantitatively to a 500-cm^3 volumetric flask. Bring to volume with 1% HNO_3 solution and transfer quantitatively to a 500-cm^3 volumetric flask. Bring to volume with 1% HNO_3 and thoroughly shake. This solution contains 1 mg U/cm^3.

8.2. Secondary standard.

8.2.1. Dilute 1 cm^3 of the primary solution to 1000 cm^3 with 1% HNO_3 and thoroughly shake. This solution contains 1 μg U/cm^3.

8.3. Dilute standards.

8.3.1. Prepare a 350-cm^3 blank by pooling urine samples from persons who work in areas containing no possible source of uranium contamination.

8.3.2. Transfer 50 cm^3 of the pooled urine blank into a clean, 90-cm^3 centrifuge tube and add 1.0 cm^3 of the secondary standard. This solution represents a sample which contains 20 μg U/1000 cm^3.

8.3.3. Repeat the above step with the remaining blank urine using 0.0, 0.10, 0.25, 0.50, and 0.75 cm^3 of the secondary standard to give standard solutions containing 0, 2, 5, 10, and 15 μg U/1000 cm^3, respectively.

8.3.4. Process these standards through the chemical analysis. See Step 9.2.

9. Procedure

9.1. Cleaning platinum dishes.

9.1.1. Platinum dishes should be handled with either platinum-tipped or smooth-tipped forceps.

9.1.2. Place the dishes in a beaker and flood with hot tap water until all excess flux is dissolved and washed away.

9.1.3. Cover the dishes with concentrated HNO_3 and add one drop of HF. Boil the dishes on a hot plate for about 1/2 hour at low heat.

9.1.4. Cool and pour off the HNO_3.

9.1.5. Rinse the dishes with tap water to remove all the acid.

9.1.6. Rinse again with distilled water. Do not touch the dishes with fingers after the final rinsing.

9.1.7. Place the beaker containing the dishes inside a drying oven and store them until ready for use.

9.1.8. If contamination is suspected, check the dishes by analyzing fused sodium fluoride flux blanks in them. Repeat the cleaning procedure if the blank readings are high.

9.2. Chemical analysis.

9.2.1. Shake sample thoroughly before aliquoting. Pour a 50-cm^3 aliquot of the acidified sample or standard into a 90-cm^3 centrifuge tube.

9.2.2. Add 0.25 cm^3 of Ca^{2+} carrier and 0.5 cm^3 of 85% H_3PO_4 to each sample and standard. Mix thoroughly with a glass stirring rod.

9.2.3. Add 2 cm^3 of concentrated NH_4OH and stir until the resulting precipitate is uniformly distributed throughout the centifuge tube.

9.2.4. Allow the precipitate to stand for at least 10 minutes. Separate the precipitate by centrifuging for 10 minutes at 1200 rpm.

9.2.5. Carefully decant the supernate and add 2 cm^3 of concentrated HNO_3 to the precipitate in the centrifuge tube.

9.2.6. Wet-ash the precipitate on an aluminum block at 300°C using concentrated HNO_3 and 30% H_2O_2.

Caution: Do not add H_2O_2 unless there is concentrated HNO_3 in the tube. Do not add more than 0.2 cm^3 of H_2O_2 at a time.

9.2.7. When the ashed urine samples become white on drying, remove the tubes from the aluminum block and dissolve the ash in about 10 cm^3 of 6 N HCl.

9.2.8. Quantitatively transfer the contents of the centrifuge tubes into the 25-cm^3 Erlenmeyer flasks using another 10 cm^3 of 6 N HCl.

9.2.9. Pipette exactly 2 cm^3 of 5% TIOA xylene solution into the flask and extract the ^{238}U by shaking the stoppered flasks for 30 seconds.

9.2.10. Allow the phases to separate for at least 15 minutes.

9.2.11. Place 10 clean platinum dishes on top of a numbered nichrome grid and record the dish and screen numbers on a ^{238}U work sheet (Fig. 5). Include three standards per grid.

9.2.12. Transfer several grams of flux powder into a beaker and press the powder into the flux dispenser.

9.2.13. Use the flux dispenser to transfer about 0.4 g of flux into each of the platinum dishes.

9.2.14. Pipette 0.2 cm^3 of the xylene phase from the Erlenmeyer flasks to the dishes containing the flux.

9.2.15. Record the sample number on the work sheet (Fig. 5) under the appropriate grid number.

9.2.16. Place the screens containing the flux and organic phase under the strip heater for about 30 minutes to evaporate the xylene in the flux.

9.2.17. Remove the grids from the strip heater and place them on the blast burner.

9.2.18. Ignite the burner with the air flow through the burner set at 500 standard cubic feet per hour (SCFH) and the propane gas flow set at 10 liters per minute.

9.2.19. After 90 seconds, adjust the gas flow to 20 liters per minute.

9.2.20. Heat the samples for another 60 seconds. Shut off the gas and air flows.

Caution: The gas should be shut off before the air.

9.2.21. Cool the screen containing the platinum dishes for 3 minutes and remove the grid with the dishes from the burner.

9.2.22. Read the fluorescence of the pellets in a calibrated fluorometer approximately 15 minutes after fusion. The dishes may be covered with tissue until they are read.

9.3. Fluorometer operation and calibration.

9.3.1. Connect the fluorometer to a grounded 110-volt, 60-cycle-ac source.

9.3.2. Turn the SENSITIVITY knob to the "5" position.

9.3.3. Switch the power switch to ON and allow a 20- to 30-minute warmup time. (The instrument should be turned off when not in use.)

9.3.4. Turn the CAL-OP switch to OPERATE, push the sample slide into the machine, and pull the ZERO key. The digital readout should read 0. If necessary, adjust the ZERO control (screwdriver adjustment at top rear of unit).

9.3.5. Turn the CAL-OP switch to CALIBRATE and set the GAIN pot so the meter reads 100.

9.3.6. Switch the CAL-OP switch to OPERATE and place the blank pellet into the sample dish in the sample slide.

9.3.7. Slide the sample into the reading position, pull the 0.01 sensitivity key, and adjust the readout to 0 using the FINE VOLTS knob and BACKGROUND knob.

9.3.8. Replace the blank with the 20 μg U/1000 cm^3 standard, pull the 0.1 sensitivity key, and adjust the readout to 100 using the GAIN knob.

9.3.9. Repeat steps 9.3.7. and 9.3.8. until the standard reads 100 and the blank reads 0 with no further adjustment.

9.3.9.1. A final adjustment may be made using the BACKGROUND knob to set 0 and the GAIN knob to set 100.

9.3.9.2. The instrument is now ready for unknowns. The settings should be checked periodically during use since the settings tend to drift.

9.3.9.3. The standard curve is usually prepared with the 0.01 and 0.1 sensitivity keys, but calibration curves may also be made for the 1.0 and 10.0 keys if necessary.

9.3.10. Record the reading for the blanks, standards, and samples on the ^{238}U work sheet.

9.3.11. If the readings are above 20, using the 0.1 key, approximately 4 μg/1000 cm^3, the samples are rerun in triplicate.

10. Calculations

10.1. Plot the standard curve using linear graph paper with the fluorometric reading on the y-axis and concentration of U on the x-axis.

10.2. Determine the concentration of the samples from the standard curve.

10.3. Results less than 1 μg/L are reported as <1 μg/L.

11. Source Materials

11.1. F. E. Butler, "Rapid Bioassay Methods for Plutonium, Neptunium, and Uranium," Health Phys. **15**, 9-24 (1967).

11.2. F. A. Centanni, A. M. Ross, and M. A. DeSesa, Anal. Chem. **28**, 1651-1657 (1956).

11.3. J. E. Dummer, Editor, "General Handbook for Radiation Monitoring," Los Alamos Scientific Laboratory Report LA-1835 (3rd ed.) (November 1958).

11.4. "Instruction and Method Manual, Galvanek-Morrison Fluorometer Mark V for Both Reflectance and Solution Attachments," Jarrell-Ash Company, 26 Farwell Street, Newtonville, Massachusetts (December 1959).

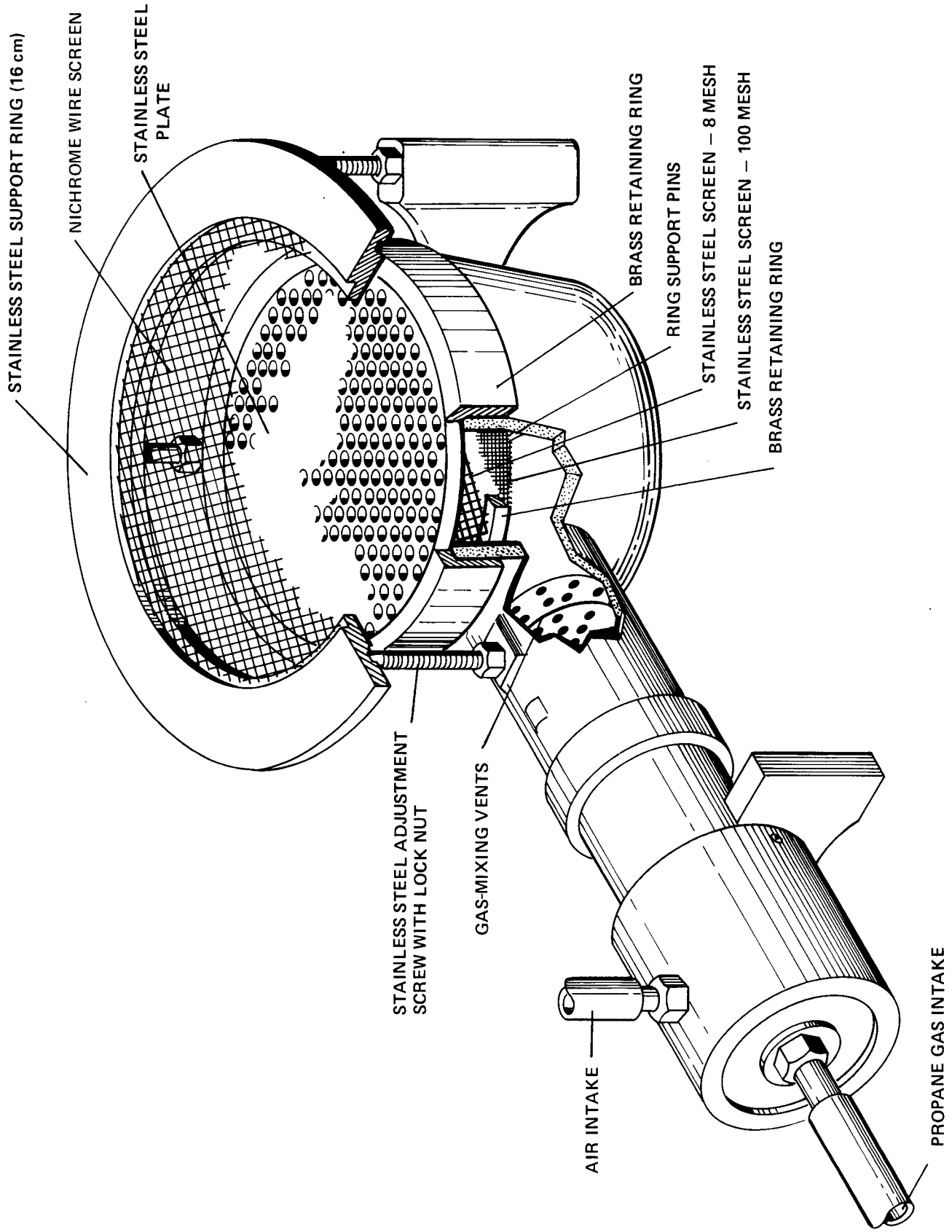

Fig. 1. Blast burner.

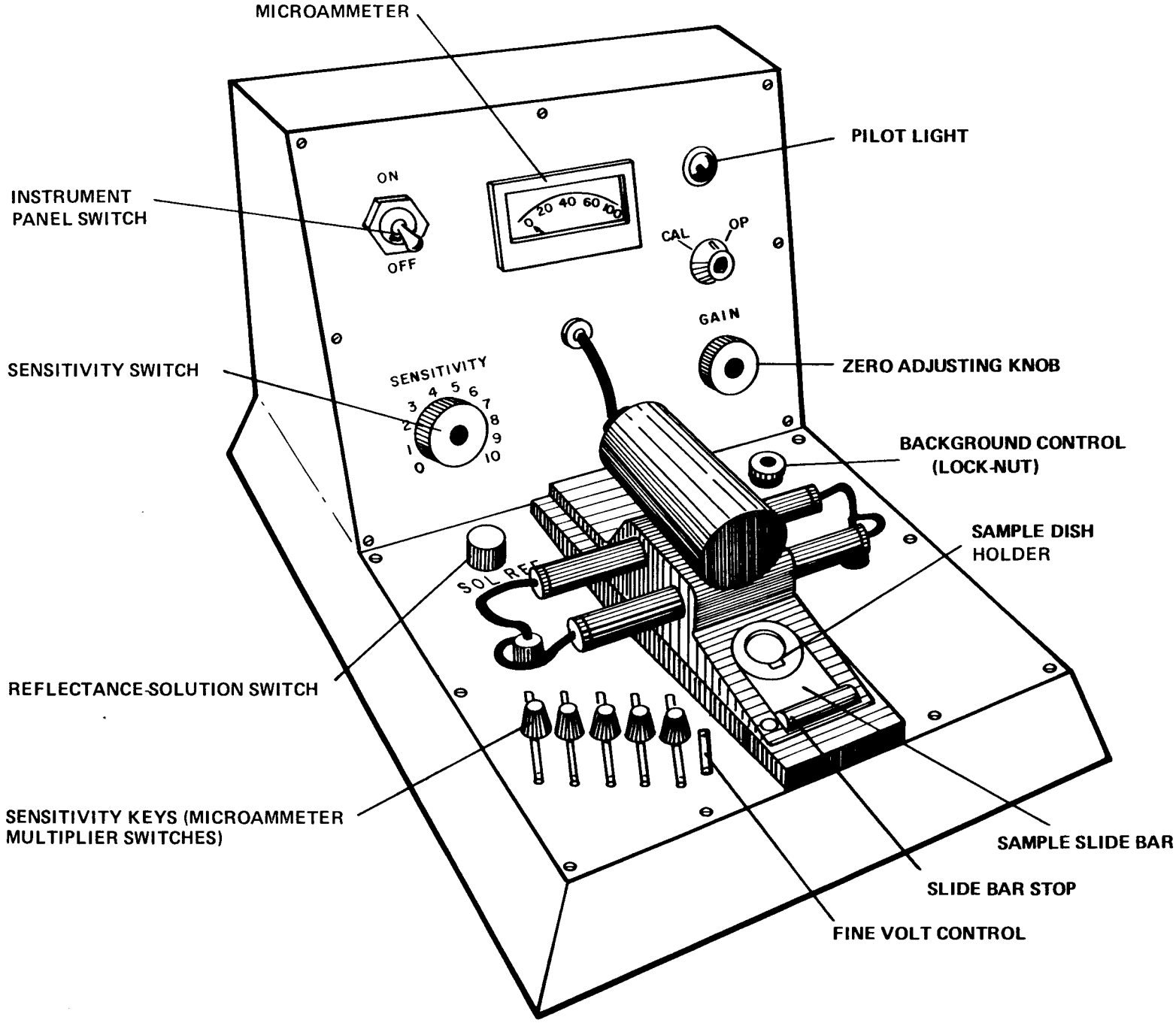

Fig. 2. Fluorometer.

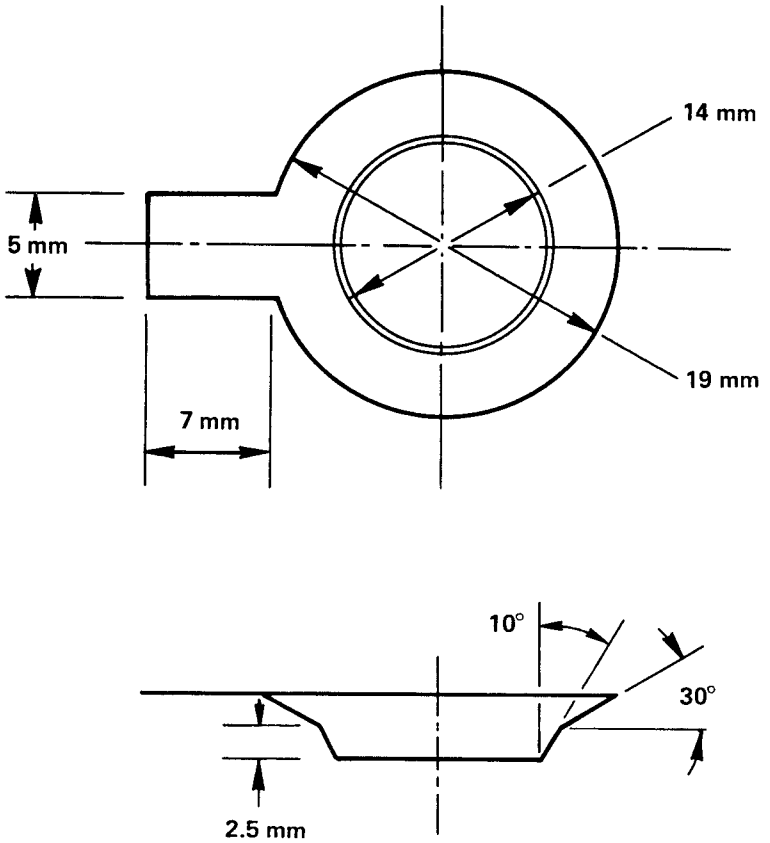

Fig. 3. Platinum dishes.

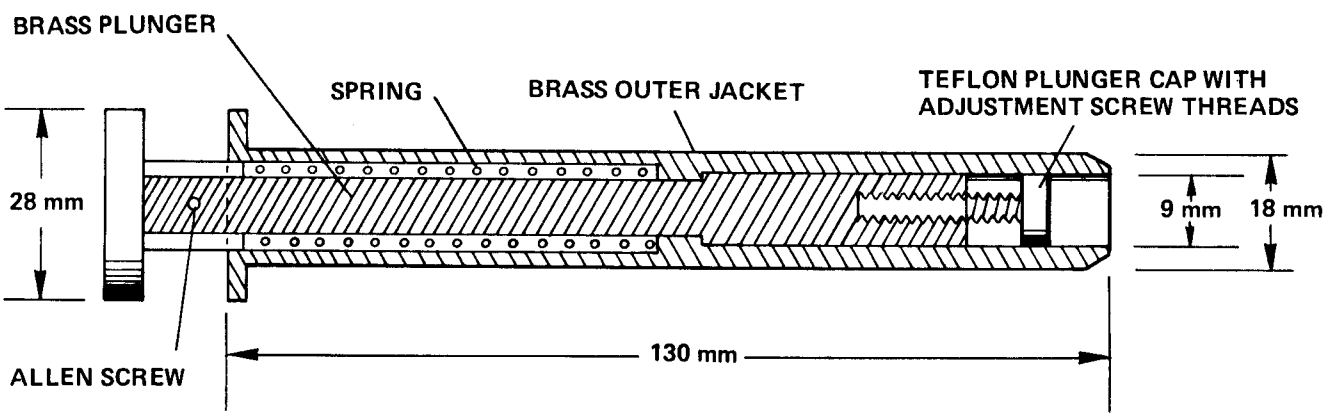

Fig. 4. Flux dispenser.

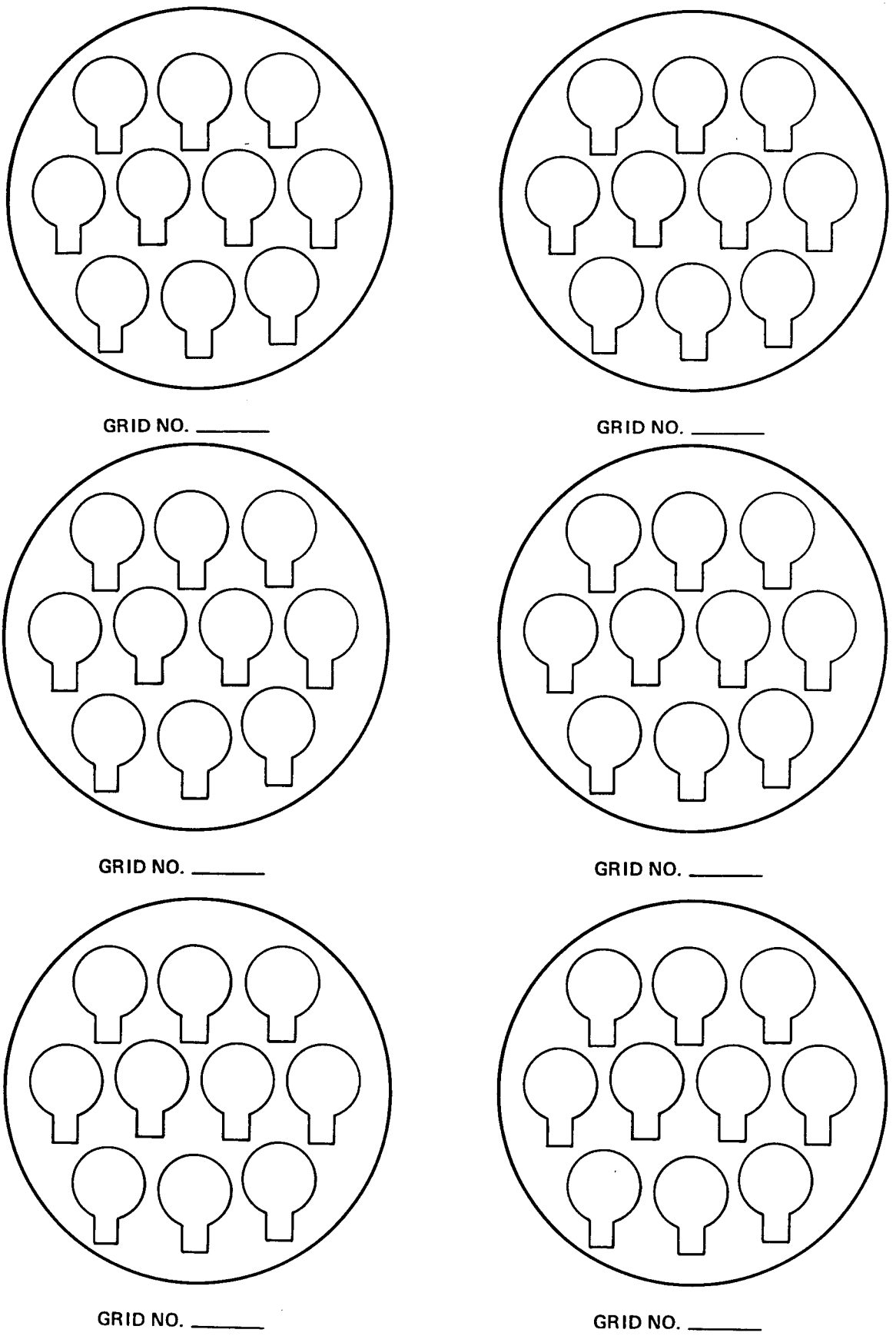

Fig. 5. Sample work sheet.

URANIUM IN URINE — ICPMS

Analyte: Uranium	**Method No.:** R290
Matrix: Urine	**Minimum Detectable Activity:** 0.2 μg/L
Procedure: Inductively coupled plasma mass spectrometry	**Accuracy and Precision:** 98% ± 3%
Effective Date: 09/01/89	**Authors:** Michael G. Bell Ernest S. Gladney

SAFETY NOTE: Before beginning this procedure, read all of the Material Safety Data Sheets for the chemicals listed in Sec. 7. Read Sec. 4.3 of the EM-9 Safety Manual for information on personal protective clothing and equipment.

1. Principle of Method

1.1. The urine is directly aspirated into the ICPMS after an initial dilution of 1:1 with 1% low temperature redistilled nitric acid. A standard curve and internal standard are used to compensate for the instrument drift and for variations in nebulization over the course of the analysis.

2. Sensitivity

2.1. The sensitivity of the ICPMS for uranium is 0.2 μg/L in the urine matrix. The standard curve must be made so that the limit of quantification is at 0.1 μg/L.

3. Accuracy and Precision

3.1. Analysis of spiked urine QC samples prepared in 1987 and 1988 using this procedure gave a mean recovery of 106% ± 7%. The data have been published in Source Materials 12.4 and 12.5 and are summarized below.

URANIUM SPIKE RECOVERY AS A FUNCTION OF CONCENTRATION

Year	Spike level (μg/L)	Mean ± RSD (%)	Number of samples
1987	8.0	111 ± 2	6
	13.0	100 ± 2	3

URANIUM SPIKE RECOVERY AS A FUNCTION OF CONCENTRATION (cont)			
Year	Spike level (μg/L)	Mean ± RSD (%)	Number of samples
1988	3.0	103 ± 7	9
	13.0	97	1
	31.0	111 ± 5	6
	50.0	102 ± 7	12
	68.0	110 ± 6	6

4. Interferences

4.1. There is no instrumental interference at the high mass range around uranium. The matrix interference is currently under study.

5. Collection and Storage of Samples

5.1. Spike samples with 0.25 mL of low-temperature redistilled nitric acid upon receipt. Refrigerate pending analysis.

6. Apparatus

6.1. Inductively coupled plasma mass spectrometer: VG Plasmaquad or equivalent, equipped with a Gilson model 221 Autosampler.

6.2. Autosampler: Gilson model 221.

6.3. Bottles: 125-mL, high-density linear polyethylene.

6.4. Test tubes: 15-mL, polypropylene.

6.5. Pipettes: 100-, 250-, 500-, and 1000-μL.

6.6. Pipette tips for above pipettes.

7. Reagents

7.1. Nitric acid (concentrated, low-temperature redistilled, LTRD).

7.2. Uranium standard: stock standard (100 mg/L). Spex Industries, Inc., Edison, New Jersey.

7.2.1. Prepare a 1 mg/L standard solution by diluting 1 mL of 100 μg/mL uranium standard to 100 mL with 1% LTRD HNO_3.

7.2.2. Prepare a 10 μg/L standard solution by diluting 1 mL of 1 mg/L uranium standard to 100 mL with 1% LTRD HNO_3.

7.3. Rhenium standard (100 mg/L). Spex Industries, Inc., Edison, New Jersey.

7.4. Blank urine for standard curve.

7.5. Urine QCs (5 to 100 μg/L). Prepare in a urine/HNO_3 matrix made by mixing equal volumes of urine and 1% LTRD HNO_3.

8. Calibration and Standards

8.1. Prepare a calibration curve at the following concentrations: (Blank, 100 ng/L, 1 μg/L, 10 μg/L, 25 μg/L, 50 μg/L, and 100 μg/L).

8.1.1. Prepare the blank by adding 50 mL of urine to 50 mL of 1% HNO_3.

8.1.2. Prepare the 100 ng/L standard by adding 1 mL of 10 μg/L standard to 100 mL of 1:1 urine and 1% HNO_3.

8.1.3. Prepare the 1 μg/L standard by adding 100 μL of 1 mg/L standard to 100 mL of 1:1 urine and 1% HNO_3.

8.1.4. Prepare the 10 μg/L standard by adding 1 mL of 1 mg/L standard to 100 mL of 1:1 urine and 1% HNO_3.

8.1.5. Prepare the 25 μg/L standard by adding 0.25 mL of 10 mg/L standard to 100 mL of 1:1 urine and 1% HNO_3.

8.1.6. Prepare the 50 μg/L standard by adding 0.50 mL of 10 mg/L standard to 100 mL of 1:1 urine and 1% HNO_3.

8.1.7. Prepare the 100 μg/L standard by adding 1 mL of 10 mg/L standard to 100 mL of 1:1 urine and 1% HNO_3.

8.2. All solutions use ^{187}Re as an internal standard. Spike 0.1 mL (100 mg/L) of ^{187}Re into each 100 mL sample. The internal standard concentration will be 100 μg/L.

9. Procedure

9.1. Set up an element menu on the ICPMS with the following elements and isotopes: ^{187}Re, ^{235}U, and ^{238}U.

9.2. Make a procedure definition on the ICPMS consisting of the following parameters.

ICPMS PROCEDURE DEFINITIONS	
Sample	No. of runs
Blank	3
100 ng/L	3
1 μg/L	3
10 μg/L	3
25 μg/L	3
50 μg/L	3
100 μg/L	3
Blank	3
QC sample	3
8 samples/spikes	3
Blank	3
8 samples/spikes	3
Blank	3
8 samples/spikes	3
Blank	3
QC sample	3
10 μg/L	3
50 μg/L	3
100 μg/L	3

10. Operation of Equipment

10.1. Set the following argon flow parameters:

- Auxiliary gas 0.1 L/min,
- Cooling gas 13.0 L/min,

- Nebulizer gas 0.68 L/min.

10.2. Set the sample introduction flow rate at 0.8 mL/min.

10.3. Set the water temperature of the water-cooled Scott spray chamber at 7°C.

10.4. Set the Mienhard nebulizer type C to 3 mL/min at 30 psi.

10.5. Set the rf generator power at 1350.

10.6. Program settings for the element menu are as follows:

- Mass range = 185-240 amu,
- MCA channels = 1024,
- Number of sweeps = 400,
- Dwell time = 160 μs,
- Baseline resolution between Pb 206-207-208.

11. Calculations

11.1. Prepare a calibration curve using a blank and six standards. Plot this data as counts versus concentration. Determine the concentration of the unknown from the curve.

11.2. If available, use a Lotus spreadsheet to do blank subtraction, internal standard corrections, and calculations of the unknowns and standard references materials. This method of calculations is fast and reduces errors.

12. Source Materials

12.1. VG Instruments manual for the operation of the ICPMS series PQ1, (V. G. Instruments, 32 Commerce Center, Danvers, MA. 01923).

12.2. A. Montaser and D. Golightly, *Inductively Coupled Plasmas in Analytical Atomic Spectrometry* (VCH Publishers, Inc., New York, 1987).

12.3. E. S. Gladney, W. D. Moss, M. A. Gautier, and M. G. Bell, "Determination of U in Urine: Comparison of ICP-Mass Spectrometry and Delayed Neutron Assay," *Health Physics* **57**, 171-175 (1989).

12.4. M. A. Gautier, E. S. Gladney, M. B. Philips, and B. T. O'Malley, "Quality Assurance for Health and Environmental Chemistry: 1987," Los Alamos National Laboratory report LA-11454-MS (1988).

12.5. M. A. Gautier, E. S. Gladney, M. B. Philips, and B. T. O'Malley, "Quality Assurance for Health and Environmental Chemistry: 1988," Los Alamos National Laboratory report LA-11637-MS (1989).

Radiotissue Chemistry

CONTENTS

Preface RT-3

Acknowledgments RT-5

Abstract RT-7

The page numbering convention used in this manual consists of the specific procedure number (shown at left in list below) followed by the page number for that procedure. Thus, RT100-2 is page two of procedure RT100. The right column in the list below gives each procedure's status or effective date.

Radiotissue Chemistry Analytical Techniques

Radiotissue Analytical Procedures

RT100 Tissue Ashing, Sample Dissolution, Sample Aliquot Selection, and Tracer Addition for Anion Exchange Isolation of Radionuclides 05/92

RT200 Anion Exchange Isolation of Plutonium from Prepared Tissue Solutions 05/92

RT300 Anion Exchange Isolation of Americium from Prepared Tissue Solutions 02/93

Anion Exchange Isolation of Thorium from Prepared Tissue Solutions ..... In Progress

RT400 Anion Exchange Isolation of Uranium from Prepared Tissue Solutions 02/93

RT500 Electroplating Americium, Plutonium, and Uranium 10/92

RT600 Alpha Spectrometry Measurement for Radionuclides of Americium 02/93

RT700 Alpha Spectrometry Measurement for Radionuclides of Plutonium 02/93

RT750 Alpha Spectrometry Measurement for Radionuclides of Thorium 04/93

RT800 Alpha Spectrometry Measurement for Radionuclides of Uranium 02/93

RT900 Measurement of Actinium in Tissue Samples — Gamma Spectroscopy 11/92

Appendix

ALPHA 1 Computer Code 09/87

PREFACE

This collection of radiochemistry procedures was prepared to document the analytical methodology used by the Tissue Project of the Environmental Chemistry Group. The analytical work performed by this section is funded by the Department of Energy (DOE), in support of the US Transuranium Registry (USTR), to measure and characterize the concentration of radionuclides in the tissues of deceased workers that were employed in the nuclear industry. This section of the manual contains analytical procedures used for the isolation, identification and quantitative determination of the radionuclides of uranium, americium, and plutonium in human tissue samples. These procedures measure the concentration of the analyses with the precision, accuracy, and specificity required by the USTR. They are part of the documentation effort to support the health and safety programs of the Los Alamos National Laboratory.

The analytical procedures were developed and modified by the staff of the Environmental Chemistry Group. The procedures have been extensively tested for their ability to quantify unknown concentrations of each analyte. Some sample materials, however, may not achieve the desired preparation characteristics because of ashing, dissolution, or electroplating problems. These problem samples may require individual attention to achieve tracer recovery consistent with that required to measure concentrations of unknown nuclides at stated detection limits. Analytical notes are included to assist analysts with the logic behind these procedures. As the state of the art for analytical chemistry and measurement methods is improved, procedures will be updated. Precision and accuracy statements derived from the analysis of reagent blanks and tissue samples spiked with known concentrations of Am, Pu, and U are provided.

For the successful application and interpretation of results produced using these procedures, it should be noted that the work must be performed in laboratory areas free from possible sample radionuclide contamination. It is also desirable that the laboratory area be as free as possible from iron. The presence of small amounts of iron in the electroplated preparation (0.1 mg per electroplated sample) will result in a degraded alpha spectrum and an apparent low chemical recovery of tracer. Each procedure is presented in a simple and concise manner. It is hoped that these procedures will be usable in their written form by any competent analyst.

The appendix to this section contains the FORTRAN computer code used for the reduction of alpha spectrometry data.

ACKNOWLEDGMENTS

The first recorded chemical analysis of human tissue for concentrations of plutonium was performed at Los Alamos in November 1944. This analysis was performed on a small piece of skin taken from a Los Alamos worker who received a stab wound from a plutonium-contaminated object. The reported concentration of plutonium was expressed as less than five counts per minute and was considered to be a background level of activity. Tissues have continued to be analyzed in connection with other contamination accidents, with the human plutonium injection studies, with interest in atomic bomb testing fallout studies, and with studies for the USTR program. All of these past efforts have contributed to the development of the present analytical chemistry procedures.

A special note of appreciation is extended to William D. Moss who, while in the position of Section Leader, provided the leadership, direction, and impetus behind this documentation effort and who subsequently reviewed all procedures for technical content.

Recognition is also due the following individuals for their general contribution in developing, evaluating, or writing the methods contained herein:

Daryl Knab, Radiochemistry Section Leader
Howard A. Boyd
Bernard C. Eustler
Edward Gonzales
Hal M. Ide
James D. McInroy
John J. Miglio
William D. Moss
Diane L. Noveroske
Anthony J. Sanchez
Linda C. Willis

This section is prepared in loose-leaf form to facilitate revisions of the procedures and the inclusion of additional procedures or data sheets. Requests for clarification or help in resolving difficulties encountered while using the procedures are welcome.

Margaret A. Gautier
Editor

Radiotissue Chemistry
Analytical Techniques

Edited by

Margaret A. Gautier

ABSTRACT

This section of the manual has been prepared to document the analytical methodology used by the Los Alamos National Laboratory Tissue Project of the Environmental Chemistry Group. The procedures used for chemical isolation and quantitative determination of ^{241}Am, ^{238,239}Pu, and ^{234,235,238}U in human tissues (liver, lung, muscle, bone, etc.) are presented. The procedures permit the preparation of complete organs and individual bones for chemical analysis. Tissue samples are air-dried, muffle-ashed at 450°C, and acid-ashed. The tissues are then dissolved in 8 M HCl and aliquoted. Appropriate radiotracers (^{243}Am, ^{242}Pu, and ^{232}U) are added, and aliquots are evaporated to dryness. The samples are redissolved and radionuclides are isolated by anion exchange. Samples analyzed for americium require solvent extraction before anion exchange. The radionuclides are electroplated on stainless steel planchets and measured for concentrations of each analyte by alpha spectrometry.

The minimum detectable amount (MDA) of alpha activity is limited by the alpha spectrometer background in the energy area associated with each radionuclide. The MDA for ^{241}Am, ^{238,239}Pu, and ^{234,238}U is 0.001 Bq (0.06 dis/min) per sample aliquot. Lower MDAs (0.0005 Bq) may be obtained by selection of counting variables; for example, lower detector backgrounds, higher tracer recovery, and longer counting periods. The measurement of ^{235}U in a sample is dependent on the resolution of the alpha energy spectrum. For this reason, detection of 0.001 Bq of ^{235}U may not always be achieved. The MDA for uranium mass, in terms of total uranium mass for samples containing normal uranium (0.001 Bq of both ^{238}U and ^{234}U), would correspond to 0.06 μg. Samples that have ^{234}U/^{238}U ratios other than one must be evaluated to calculate the corresponding mass of uranium. The chemical recovery of each tracer, at its indicated concentration, averages 84% ± 10% for ^{242}Pu (0.15 Bq), 77% ± 7% for ^{243}Am (0.07 Bq), and 90% ± 8% (0.07 Bq) for ^{232}U.

TISSUE ASHING, SAMPLE DISSOLUTION, SAMPLE ALIQUOT SELECTION, AND TRACER ADDITION FOR ANION EXCHANGE ISOLATION OF RADIONUCLIDES

Analytes: Americium, plutonium uranium, and thorium	**Method No.:** RT100
Matrix: Tissue	**Procedure:** Muffling, acid-ashing, and dissolution in 8 M HCl
Effective Date: 01/01/86	**Author:** Edward R. Gonzales

SAFETY NOTE: Before beginning this procedure, read all of the Material Safety Data Sheets for the chemicals listed in Sec. 3. Read Sec. 4.3 of the EM-9 Safety Manual for information on personal protective clothing and equipment.

1. Principle of Method

1.1. The selected tissue is air-dried, muffled at 450°C, alternately wet- and dry-ashed,and dissolved in acid (usually 8 M HCl).

1.2. The solution is aliquoted and tracer isotopes are added.

2. Apparatus

2.1. Beakers: borosilicate glass, various sizes.

2.2. Balance: with at least two-decimal-place accuracy.

2.3. Watch glasses: sizes to fit beakers in use.

2.4. Drying oven, vented.

2.5. Muffle furnace: adjustable to 450°C.

2.6. Fume hood.

2.7. Hot plates: adjustable to 140°C.

2.8. Hot plates: magnetic stirring, adjustable to 140°C.

2.9. Stirring bars: Teflon-coated.

2.10. Beakers: Teflon, with covers.

2.11. Bottles: flint-glass, 8-, 16-, and 32-oz.

3. Reagents

3.1. Nitric acid (concentrated, 69-71%, reagent-grade).

3.2. Hydrochloric acid (concentrated, 36.5-38%, reagent-grade).

3.3. Hydrochloric acid (8 M). Dilute 667 mL of concentrated HCl to 100 mL with distilled H_2O.

3.4. Hydrofluoric acid (48.0-51.0%).

3.5. Hydrogen peroxide (30%).

3.6. Plutonium-242 tracer solution.

3.7. Americium-243 tracer solution.

3.8. Uranium-232 tracer solution.

3.9. Thorium-229 or -234 tracer solution.

4. Sample Drying

4.1. Record the sample number (using pencil) on a clean, tared, borosilicate glass beaker. Place the tissue in the beaker. Record sample net weight in the notebook.

4.2. Spike general population tissue samples with appropriate isotopes.

4.3. Dry sample for 2-5 days. Drying time is dependent on size and moisture content of the sample. Small tissue samples will dry within 2 days and may then be removed from the oven.

4.4. Cover the beaker with a watch glass if possible.

5. Sample Muffle-Ashing

5.1. Transfer dry samples to a muffle furnace and heat samples according to the following schedule. Increase temperature in increments of 50°C every 4 h until final temperature for the day and then hold.

Day 1	150°C start 250°C hold
Day 2	250°C start, move to 300°C

	300°C hold
Day 3	300°C start, move to 450°C
	450°C hold
Days 4-6	450°C; maintain temperature at 450°C for 72 h, shut off furnace, and allow samples to cool.

5.2. Cool bone samples to room temperature. Record weight of bone ash.

6. Acid-Ashing

6.1. To sample muffled add, by rinsing sides of beaker, sufficient amounts of concentrated HNO_3 to completely cover the ash. Place beaker on hot plate set at 120°C-140°C.

6.2. Add a small amount of 30% H_2O_2 (1-2 mL) to the beaker. Periodically add small amounts of H_2O_2. Allow foaming to subside between additions. Add concentrated HNO_3 as necessary to prevent ash from drying. Ashing is complete when the sample loses its brownish color.

6.3. If sample ash remains black and viscous after repeating Steps 6.1 and 6.2 several times, proceed as follows.

6.3.1. Cover beaker with a watch glass and reflux on a hot plate set at 140°C until sample loses its viscosity.

6.3.2. Remove the watch glass and reduce hot plate temperature to 100°C. Allow sample to dry thoroughly. Use care to avoid splattering the sample. When sample appears dry, increase hot plate temperature to 140°C. Heat for several hours to ensure dryness.

6.3.3. Cover the sample beaker with a watch glass and place the sample in the muffle furnace. Set the furnace at 200°C, and increase the temperature by 100°C every 2 h until 450°C is reached. Hold at 450°C until ash whitens (usually requires several hours).

6.3.4. Remove sample from muffle furnace and repeat Steps 6.1 and 6.2 until the ash material whitens or is cream or purple in color.

NOTE: All lung and lymph node tissues require HF treatment. Proceed to Step 7.6.

7. Sample Ash Dissolution

7.1. To the beaker containing the ashed tissue sample, add 5-10 mL each of concentrated HCl and 5-10 mL of concentrated HNO_3 to loosen the ash from the beaker bottom. Place the beaker on a hot plate set to 140°C.

NOTE: Experience has shown that the addition of small amounts of HNO_3 at this step will aid in the dissolution of the ash in the 8 M HCl added in Step 7.2.

7.2. Add 50-900 mL of 6-8 M HCl to the sample beaker. Place a watch glass on the beaker and reflux until the ash is dissolved.

NOTE: The amount of acid required to dissolve the sample ash will vary between samples and will, to some extent, depend on the mass of the sample ash and tissue type. The amount of HCl used should be limited to the quantity required for complete ash dissolution. In general, bone samples will require more acid than soft tissues, and large samples will require more acid than small samples. The final sample weight, measured in grams of HCl, will be adjusted in Step 8.2 to between 100 and 1000 g.

7.3. To check ash for undissolved particles, shine the light from a flashlight through the beaker bottom (in a darkened room). If the sample solution is clear, proceed to Step 8.

7.4. If light is reflected from particles of ash, additional treatment will be necessary. Place the sample on a stirring hot plate, add a Teflon-coated stirring bar, and stir-heat for one hour. If the sample remains undissolved, add 6-8 M HCl and stir-heat for several hours. If the sample still remains undissolved, proceed to Step 7.6.

7.5. Bone samples with undissolved ash.

NOTE: Bone samples are not treated with HF because the acid will precipitate the calcium phosphate and carry with it the analyte nuclide.

7.5.1. If the bone sample has not dissolved, evaporate ash to dryness on a hot plate set at 140°C and add enough concentrated HNO_3 to cover the salts. Cover the sample with a watch glass and reflux for 1 h.

7.5.2. Remove the watch glass and dry thoroughly. Repeat Step 6.3.3 and Steps 7.1 through 7.4. If the sample is still not dissolved, record this information in the notebook and proceed to Step 8.

7.6. Hydrofluoric acid digestion of soft tissue.

7.6.1. Transfer the sample into the proper size Teflon beaker using 6-8 M HCl. If necessary, use a rubber policeman to dislodge ash from sides of the beaker.

7.6.2. Evaporate sample to dryness at 120°C.

7.6.3. Add concentrated HNO_3 to completely cover the ash. Heat the sample for several minutes.

7.6.4. Estimate the volume of HNO_3 added and add one-fifth that volume of HF.

CAUTION: Use extreme care with HF. Double gloves are recommended. Wash gloves after use.

7.6.5. Cover a Teflon beaker with a Teflon cover and reflux for 8 h or overnight.

7.6.6. Remove the cover and evaporate the sample to dryness.

7.6.7. Wash down the beaker with enough concentrated HNO_3 to cover the bottom of the beaker and heat to dryness. Repeat twice.

7.6.8. Add enough 8 M HCl to dissolve the sample as directed in Steps 7.1 through 7.3.

8. Sample Storage

8.1. Transfer the cooled sample to a tared flint-glass bottle of appropriate size. Rinse the beaker with 6-8 M HCl and pour rinse into the bottle. Repeat twice.

8.2. Using 6-8 M HCl, bring the solution level up to the nearest weight: 100, 200, 250, 400, 500, 800, or 1000 g.

9. Sample Aliquot Selection for Radiochemical Analysis

9.1. Determine the sample aliquot volume required to detect the analyte of interest from the estimated gross concentration of alpha activity and ash weight of the tissue.

9.2. Tare the beaker selected to contain the aliquot volume and transfer an appropriate aliquot. Record the sample weight.

9.3. Add tracers.

9.4. Place the sample beaker on a hot plate with a surface temperature of 100°C.

9.5. Take the sample to dryness. Do not bake. Allow the sample to cool.

9.6. Proceed to appropriate procedure for anion-exchange isolation from prepared tissue solutions.

10. Source Material

10.1. H. A. Boyd, B. C. Eutsler, and J. F. McInroy, "Determinations of Americium and Plutonium in Autopsy Tissue: Methods and Problems," in Actinides in Man and Animals, Proceedings of the Snowbird Actinide Workshop, Oct. 15-17, 1979, M. E. Wrenn, scientific editor (R. D. Press, Salt Lake City, Utah, 1981), pp.43-52.

Revisions or additions to the procedure are marked (▒▒▒▒). Where a section heading is marked, the entire section has been revised.

ANION EXCHANGE ISOLATION OF PLUTONIUM FROM PREPARED TISSUE SOLUTIONS

Analyte: Plutonium-238 and Plutonium-239	**Method No.:** RT200
Matrix: Tissue	**Accuracy and Precision:** 84% ± 10% (mean ±1 sigma) at 0.15-Bq level (9 dis/min)
Procedure: Isolation by anion exchange	**Minimum Detectable Activity:** 0.001 Bq (0.06 dis/min) of $^{238,239}Pu$ per sample aliquot
Effective Date: 01/01/79	**Authors:** Howard A. Boyd Edward R. Gonzales Linda C. Willis

SAFETY NOTE: Before beginning this procedure, read all of the Material Safety Data Sheets for the chemicals listed in Sec. 5. Read Sec. 4.3 of the EM-9 Safety Manual for information on personal protective clothing and equipment.

1. Principle of Method

1.1. Radionuclides of plutonium are isolated from ashed and acid-dissolved tissue samples.

1.2. An aliquot of the tissue sample solution is selected for analysis on the basis of wet sample mass and estimated sample alpha activity.

1.3. Plutonium-242 tracer is added to the aliquot. Plutonium is isolated by anion exchange and electroplated on stainless-steel disks.

1.4. Concentrations of ^{238}Pu and ^{239}Pu are determined by alpha spectrometry.

1.5. Chemical losses are identified and corrected on the basis of the recovery of the added ^{242}Pu tracer.

2. Sensitivity

2.1. Sensitivity is limited by the counter background.

2.2. For routine measurements with a 70,000-s counting period, 60% tracer recovery, and a counting efficiency of 30%, the minimum detectable activity

(the 95th percentile of the background distribution) is 0.001 Bq per sample (0.06 dis/min) of $^{238,239}Pu$.

3. Accuracy and Precision

3.1. Average recovery of ^{242}Pu tracer is 84% ± 10% at the 0.15-Bq (9-dis/min) concentration level.

4. Apparatus

4.1. Hot plates.

4.2. Magnetic stirring hot plates.

4.3. Stirring bars: Teflon-coated.

4.4. Thermometer.

4.5. Watch glasses: assorted sizes to fit beakers used.

4.6. Ion-exchange columns: borosilicate glass column, approximate dimensions 130-mm-long by 17-mm-o.d. (14-mm-i.d.), with a reservoir at the top, 80-mm-long by 35-mm-o.d., and a stopcock at the bottom.

4.7. Rack: to support ion-exchange columns.

4.8. Glass wool: Pyrex.

4.9. Graduated cylinders.

4.10. Beakers: various sizes.

4.11. Automatic pipettor: variable volume dispenser.

5. Reagents

5.1. Hydrochloric acid (concentrated, reagent-grade).

5.2. Hydrogen peroxide (30%).

5.3. Hydrochloric acid (9 M HCl-Cl_2). Add 9 mL H_2O_2 (30%) and 1350 mL concentrated HCl to 450 H_2O. Heat for 1 h at 120°C.

5.4. Hydrochloric acid (0.6 M). Dilute 50 mL of concentrated HCl to 1000 mL with distilled H_2O.

5.5. Bio-Rad anion-exchange resin (AG 1-X4, 100-200 mesh), chloride form. Add 500 mL of 0.6 M HCl to one pound of resin, shake thoroughly, allow to settle, and decant the solution along with the fines. Each new batch of resin (different lot number) should be checked by running QC samples to check quality.

5.6. Nitric acid (concentrated, reagent-grade).

5.7. Nitric acid (8 M). Dilute concentrated HNO_3 with an equal volume of H_2O.

5.8. Hydrochloric acid (1.2 M HCl). Dilute 100 mL of concentrated HCl to 1000 mL with H_2O.

6. Procedure

6.1. Sample preparation.

6.1.1. Refer to procedure RT100, Tissue Ashing, Sample Dissolution, Sample Aliquot Selection, and Tracer Addition for Anion Exchange Isolation of Radionuclides, for sample preparation.

6.2. Sample dissolution.

6.2.1. To the prepared sample, add enough (a minimum of 100 mL is needed) 9 M HCl-Cl_2 to completely dissolve the sample when heated to 120°C on a hot plate. Use stirring hot plates with magnetic stirring bars to hasten the dissolution of large samples. Cover the beaker with a watch glass while heating.

NOTE: A concentration of 25 mg ash per mL of 9 M HCl should not be exceeded. Ash weights for bones will have been determined. Ash weights of soft tissues are assumed to be 1% of fresh weights.

6.2.2. When the sample has dissolved, heat it for 5-10 min on a hot plate with a surface temperature of 120°C. Remove the sample from the hot plate and allow it to cool to room temperature.

6.3. Anion exchange separation.

6.3.1. Tamp a glass wool plug, approximately 1 cm thick, firmly into the ion exchange column. This is not necessary if the column has a permanent plug.

6.3.2. Using a graduated cylinder and H_2O, measure a 12-mL volume above the plug and mark the column at this level. Drain off the H_2O.

6.3.3. Fill the column with a slurry of AG 1-X4 resin in 0.6 M HCl to a settled volume of 12 mL. Place a small plug of glass wool over the top of the resin to prevent disturbance as reagents are added.

6.3.4. Wash the column with 5 column volumes of 9 M HCl-Cl_2, allowing this to drip into waste beakers. Discard this solution.

6.3.5. If americium is also to be determined in the sample, place a collection beaker under the column. This must be large enough to contain the sample volume plus the 7 column volumes of 9 M HCl-Cl_2 wash that will follow.

6.3.6. Pour the sample onto the column. Rinse the beaker twice with 9 M HCl-Cl_2, adding the washings to the column.

6.3.7. Adjust the flow rate as nearly as possible to 2 ± 1 mL/min.

6.3.8. When the solution has drained to the top of the resin bed, pour 7 column volumes of 9 M HCl-Cl_2 through the column.

6.3.9. When this solution has reached the top of the resin bed, remove the americium collection beaker, if used, and replace it with a waste beaker for the next wash. Evaporate the americium fraction to dryness on a hot plate with a temperature not greater than 120°C.

NOTE: Proceed to procedure RT300, Anion Exchange Isolation of Americium from Prepared Tissue Solutions, for the determination of americium.

6.3.10. Wash the column with 10 column volumes of 8 M HNO_3. If the sample is also to be analyzed for uranium, discard the first 2.5 column volumes of this wash. Replace the waste beaker with a 100-mL beaker and save the remaining 7.5 column volumes for the uranium procedure, RT400. Evaporate this uranium fraction to dryness on a hot plate.

NOTE: Washing with 8 M HNO_3 removes the iron from the resin bed.

6.3.11. When the wash solution has reached the top of the resin bed, replace the waste beaker with a small beaker for the collection of the plutonium fraction.

6.3.12. Elute the plutonium with 7 column volumes of 1.2 M HCl containing 2 mL H_2O_2 per 100 mL 1.2 M HCl.

6.3.13. Evaporate the eluate to dryness on a hot plate.

6.4. Proceed to procedure RT500, Electroplating Americium, Plutonium, Thorium, and Uranium.

7. Source Materials

7.1. I. K. Kressin, *Anal. Chem.* **49**, 842 (1977).

7.2. I. K. Fressin, W. D. Moss, E. E. Campbell, and H. F. Schulte, *Health Phys.* **28**, 41 (1975).

Revisions or additions to the procedure are marked (). Where a section heading is marked, the entire section has been revised.

ANION EXCHANGE ISOLATION OF AMERICIUM FROM PREPARED TISSUE SOLUTIONS

Analyte: ^{241}Am	**Method No.:** RT300
Matrix: Tissue	**Accuracy and Precision:** 77% ± 7% (mean ± 1 sigma) at 0.07 Bq level (4 dis/min)
Procedure: Isolation by anion exchange	**Minimum Detectable Activity:** 0.001 Bq (0.06 dis/min) per sample aliquot
Effective Date: 01/01/86	**Authors:** Edward R. Gonzales Linda C. Willis Daryl Knab

SAFETY NOTE: Before beginning this procedure, read all of the Material Safety Data Sheets for the chemicals listed in Sec. 5. Read Sec. 4.3 of the EM-9 Safety Manual for information on personal protective clothing and equipment. Read Sec. 7 of this procedure and Source Materials 8.3 and 8.4 for proper waste disposal practices.

1. Principle of Method

1.1. Radionuclides of americium are isolated from ashed and acid-dissolved tissue samples.

1.2. An aliquot of the tissue sample solution is selected for analysis based on wet sample mass and estimated sample alpha activity.

1.3. Americium-243 tracer is added to the aliquot. Americium is separated from prepared tissue solutions by solvent extraction and anion exchange and is electroplated on stainless-steel disks.

1.4. Concentrations of ^{241}Am are determined by alpha spectrometry.

1.5. Chemical losses are identified and corrected on the basis of the recovery of the added ^{243}Am tracer.

2. Sensitivity

2.1. Sensitivity is limited by the counter background.

2.2. For routine measurements with a 70,000-s counting period, a tracer recovery of 60%, and a counting efficiency of 30%, the minimum detectable activity (the 95th percentile of the background distribution) is 0.001 Bq per sample (0.06 dis/min) of ^{243}Am.

3. Accuracy and Precision

3.1. Average recovery of ^{243}Am tracer is equal to 77% ± 7% at the 0.07 Bq (4 dis/min) concentration level.

4. Apparatus

4.1. Fume hood.

4.2. Beakers: 100-, 150- and 2000-mL.

4.3. Magnetic stirring hot plates: Corning PC-351 or equivalent.

4.4. Stirring bars: Teflon-coated, 1-in.

4.5. Funnel: 2-L Buchner, fritted disc.

4.6. Wash bottle: 250-mL.

4.7. Hot plates: Thermolyne Model 2200 or equivalent.

4.8. Separatory funnels: 125-, 250-, or 500-mL.

4.9. Funnel support: adjustable height.

4.10. Watch glasses: 2- or 2.5-in.-diam.

4.11. Ion-exchange columns (Fig. 1): borosilicate glass barrel with polypropylene reservoir, column tip, and bed support, 20 cm long by 1.0 cm i.d., Catalog No. 737-1020, Bio-Rad Laboratories, Chemical Division Sales Office, 2200 Wright Avenue, Richmond, CA 94804.

4.12. Rack: equipped with three-prong clamps to support ion-exchange columns.

4.13. Funnel: powder, 50-mL.

4.14. Graduated cylinders: 10-, 100-, 500-, and 1000-mL.

4.15. Thermometer: dial-type, metal, Celsius.

4.16. Automatic pipettors: variable volume dispenser with a 1000-mL capacity reservoir. Nalge, Stock No. 3702-3260.

4.17. Automatic dispensing pipettors: to dispense 5-mL volume, with an 8-oz. reservoir. Nalge, Stock No. 3700-0005.

4.18. Dispensers: Bottle-Top Dispensette, Brinkman, No. 50-03-020-2.

5. Reagents

5.1. Nitric acid (concentrated 69-71%, reagent-grade).

5.2. Nitric acid (1 M). Add 125 mL of concentrated HNO_3 to 1875 mL of distilled water.

5.3. Silver nitrate (1%). Add 1 g of $AgNO_3$ to 100 mL of distilled water.

5.4. Bio-Rad anion-exchange resin (AG MP-1, 100-200 mesh) chloride form, for americium. Convert the chloride form to the nitrate form.

5.4.1. Transfer 1 pound of resin to a 2-L beaker using a small amount of 1 M HNO_3.

5.4.2. Add 1 L of 1 M HNO_3 to the resin and stir on a magnetic stirrer for 15 min.

5.4.3. Slowly filter the resin through a 2-L fritted-disc Buchner funnel.

5.4.4. Wash the resin twice with 1-L aliquots of 1 M HNO_3.

5.4.5. Test the effluent for Cl^- by adding one drop of 1% $AgNO_3$. A white precipitate indicates the presence of Cl^-.

5.4.6. If a white precipitate forms, continue washing the resin with 1 M HNO_3 until no precipitate is formed when $AgNO_3$ is added.

5.4.7. Air-dry the resin and store in the original bottle.

5.4.8. Label the bottle as "Nitrate-Form Resin" and date.

5.4.9. Aliquot an amount of resin sufficient to analyze a set of samples and transfer to a 250-mL wash bottle.

5.4.10. Add a sufficient amount of 60:40 ethanolic nitric acid, Reagent A, to the wash bottle to form a slurry.

5.5. Sodium nitrite.

5.6. DDCP (Dibutyl-N,N-diethylcarbamoyl phosphonate, technical-grade). Columbia Organic Chemicals Co., Inc., Camden, SC 29020.

5.7. Dodecane (A.C.S. reagent-grade).

5.8. Nitric acid (2 M). Add 250 mL of concentrated HNO_3 to 1750 mL of distilled water.

5.9. Nitric acid (2.5 M). Add 78 mL of concentrated HNO_3 to 422 mL of distilled water.

5.10. Nitric acid (6 M). Add 750 mL of concentrated HNO_3 to 1250 mL of distilled water.

5.11. Nitric acid (12 M). Add 1500 mL of concentrated HNO_3 to 500 mL of distilled water.

5.12. Ethanol (absolute).

5.13. Ethanol nitric acid, Reagent A (60:40 mixture of EtOH and 6 M HNO_3). Add 280 mL of 6 M nitric acid to 420 mL of ethanol. Prepare fresh.

5.14. EtOH-$NaNO_2$ (saturated). Add $NaNO_2$ to ethanol and shake well.

5.15. Methanol (absolute, ACS reagent-grade).

5.16. Methanol nitric acid, Reagent B (75:25 mixture of MeOH and 6 M HNO_3). Add 175 mL of 6 M nitric acid to 525 mL of methanol. Prepare fresh.

5.17. Methanol nitric acid, Reagent C (60:40 mixture of MeOH and 6 M HNO_3). Add 280 mL of 6 M nitric acid to 420 mL of methanol. Prepare fresh.

5.18. Methanol nitric acid, Reagent D (60:40 mixture of MeOH and 2.5 M HNO_3). Add 280 mL of 2.5 M nitric acid to 420 mL of methanol. Prepare fresh.

6. Procedure

6.1. Sample preparation.

6.1.1. Refer to procedure RT100, Tissue Ashing, Sample Dissolution, Sample Aliquot Selection, and Tracer Addition for Anion Exchange Isolation of Radionuclides, for sample preparation.

6.2. Sample dissolution.

6.2.1. Add 5 mL of concentrated HCl to the sample and heat at 80-100°C.

6.2.2. Add 20 mL of 12 M HNO_3 and heat, using a magnetic stirrer, if necessary, to dissolve the sample. Add 15 mL of concentrated HNO_3. If the sample does not dissolve, add an additional 5 mL of concentrated

HCl, 20 mL of 12 M HNO_3, and 15 mL of concentrated HNO_3. Repeat these additions until the sample is dissolved. Bring the final volume to 40, 90, 140, 190 mL, etc., by adding 12 M HNO_3.

NOTE: An alternate method may be more successful for certain samples, especially those containing cartilage. To the 5 mL of concentrated HCl added in Step 6.2.2, slowly add 5 mL of H_2O. Heat until the sample is dissolved or nearly dissolved and then add 30 mL of concentrated HNO_3. It may be necessary to use multiples of these amounts depending on the size and difficulty of the sample.

6.3. Extraction of americium.

6.3.1. Transfer the solution to an appropriate size (125-, 250-, 500-mL) separatory funnel. Rinse the beaker with 5 mL of 12 M HNO_3 and add the rinse to the separatory funnel. Repeat rinse.

6.3.2. Add 1 mL of undiluted DDCP per 50 mL of solution and shake for 20 s. Allow to stand until the phases separate (several hours or overnight).

6.3.3. Drain the lower aqueous phase and discard.

6.3.4. Add 10 mL of 12 M HNO_3 to the DDCP solution. Shake vigorously for 10 s. Allow the phases to separate.

6.3.5. Remove the stopper and drain and discard the aqueous phase.

6.3.6. Add 5 mL of dodecane for each 1 mL of DDCP used in Step 6.3.2.

6.3.7. Add 20 mL of 2 M HNO_3 for each 1 mL of DDCP used in Step 6.3.2.

6.3.8. Insert a glass stopper in the separatory funnel and shake vigorously for 10 s. Allow the phases to separate.

6.3.9. Remove the glass stopper and drain the aqueous solution into a 100- or 150-mL beaker.

NOTE: The 2 M HNO_3 added in Steps 6.3.7 and 6.3.10 strips the americium.

6.3.10. Repeat Steps 6.3.7 through 6.3.9.

NOTE: Evaporation of the stripping solution from Step 6.3.11 may be started while phases are separating.

6.3.11. Discard the organic solution into a plastic-coated glass bottle containing 200 mL of H_2O. Label as organic waste. Seal the bottle with a stopper

compatible with the solution, that will release if pressure builds up in the container.

6.3.12. Place the beaker on a hot plate with a surface temperature of 80-90°C and take to dryness.

6.3.13. Add 10 mL of concentrated HNO_3 to the beaker and take to dryness.

6.3.14. Repeat Step 6.3.12.

6.4. Methanol nitric acid anion exchange.

6.4.1. Add 5 mL of 6 M HNO_3 to the sample. Cover with a watch glass and heat between 80-90°C for 10-15 min to dissolve the sample.

NOTE: It may be necessary to increase the volume of 6 M HNO_3 in order to get the sample into solution. Increase the volume of ethanol used in Step 6.4.3 proportionately. If the sample appears to be insoluble in 6 M HNO_3, evaporate it to dryness, dissolve the sample in concentrated HNO_3, add enough distilled water to make the solution 6 M HNO_3, and multiply the total volume by 1.5 to find the amount of ethanol to use in Step 6.4.3.

6.4.2. Cool for at least 10 min.

6.4.3. Add 7.5 mL of EtOH saturated with $NaNO_2$ to the sample. Cover and allow to stand while the column is prepared.

6.4.4. Measure 7 mL of water into the column and mark the column at the water level. Discard the water. Add a slurry of AG MP-1 (100-200 mesh) nitrate-treated resin as prepared in Steps 5.4.1 through 5.4.10, allowing it to settle to the mark.

6.4.5. Add 21 mL of 60:40 ethanol nitric acid, Reagent A, to the column, drain, and discard.

6.4.6. Transfer the sample to the column funnel. Rinse the beaker with 5 mL of 60:40 ethanol nitric acid, Reagent A, and add to the column. Repeat this rinse and add it to the column.

6.4.7. Firmly place a 50-mL funnel into the top of the column.

6.4.8. Wash the column with 30 mL of 75:25 methanol nitric acid, Reagent B.

6.4.9. Wash the column with 30 mL of 60:40 methanol nitric acid, Reagent C.

6.4.9.1. Add 200 mL H_2O to the column washes. Evaporate on low heat to 50 mL. Save this solution until sample recovery has been determined. If recoveries are low, reanalyze this solution.

6.4.10. Elute the americium from the column with 40 mL of 60:40 MeOH and 2.5 M HNO_3, Reagent D, and collect in a 100-mL beaker for electroplating.

6.4.11. Evaporate the eluate to dryness on a hot plate.

6.5. Proceed to procedure RT500, Electroplating Americium, Plutonium, and Uranium.

7. Proper Waste Disposal Practices

7.1. Discard the acid solutions from Steps 6.3.3 and 6.3.5 into the acid waste system.

7.2. Discard the solution from Step 6.4.9.1 into the acid waste system after determining sample recovery.

7.3. Discard the organic solution from Step 6.1.11 into a plastic-coated sealed glass waste container containing 200 mL H_2O , labeled organic waste. Seal the container with a stopper compatible with the solution that will release if pressure builds up in the container.

7.4. Waste pickup.

7.4.1. See AR 10-3 for general Laboratory policy on waste disposal.

7.4.2. Fill out the waste Profile Request Form (PRF) and send it to EM-8 along with all pertinent MSDS sheets. The form will be returned to the group waste management coordinator, who will return it to the waste generator.

7.4.3. After the PRF is returned signed off by EM-8 and with a reference number, fill out the Chemical Waste Disposal Request (CWDR) form. Send this form and the original PRF(s) to EM-7.

7.4.4. After the CWDR is returned call HS-1 to have an HP technician monitor and tag the container.

7.4.5. After the container has been tagged by the technician call EM-7 to arrange for pickup of the container.

8. Source Materials

8.1. J.F. McInroy, H.A. Boyd, B.C. Eutsler, and D. Romero, "Part IV: Preparation and Analysis of the Tissues and Bones," *Health Phys.* **49**, 587-621 (1985).

8.2. D. Knab, "Determination of Americium in Small Environmental Samples," *Anal. Chem.* **51**, 1095 (1979).

8.3. "Chemical, Hazardous, and Mixed Waste," Administrative Requirement 10-3, in *Environment, Safety, and Health Manual*, Los Alamos National Laboratory Manual, Chapter 1 (most recent edition).

8.4. "Disposal of Solid Radioactive Waste from EM-9 Group Areas at TA-59, OH-1," SOP2, in *Environmental Chemistry Group: Environment, Safety and Health Manual*, Appendix III (most recent edition).

Revisions or additions to the procedure are marked (▒▒▒▒). Where a section heading is marked, the entire section has been revised.

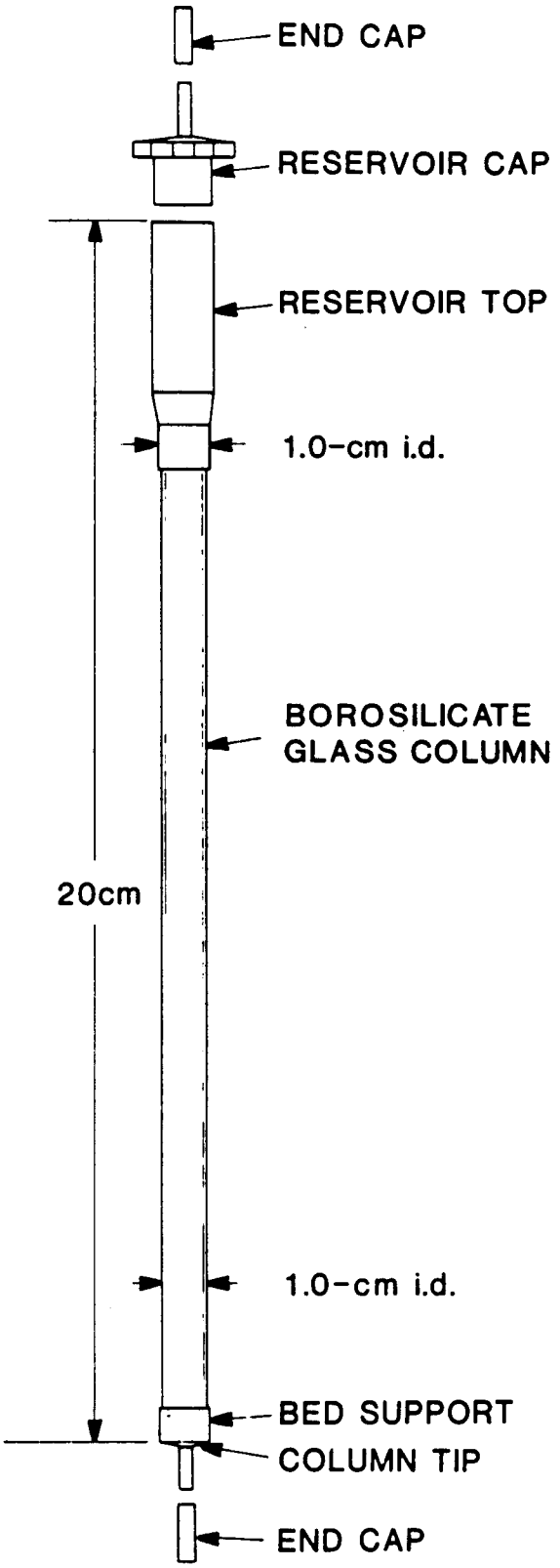

Fig. 1. Ion exchange column for americium.

ANION EXCHANGE ISOLATION OF URANIUM FROM PREPARED TISSUE SOLUTIONS

Analyte: Radionuclides of ^{234}U, ^{235}U, and ^{238}U	**Method No.:** RT400
Matrix: Tissue	**Accuracy and Precision:** 90% ± 8% (mean ± 1 sigma) at 0.07 Bq level (4 dis/min) of ^{232}U
Procedure: Isolation by anion exchange	**Minimum Detectable Activity:** 0.01 Bq (0.06 dis/min) of ^{238}U and ^{234}U per sample aliquot
Effective Date: 01/01/86	**Authors:** Edward R. Gonzales Linda C. Willis

SAFETY NOTE: Before beginning this procedure, read all of the Material Safety Data Sheets for the chemicals listed in Sec. 5. Read Sec. 4.3 of the EM-9 Safety Manual for information on personal protective clothing and equipment. Read Sec. 7 of this procedure and Source Material 8.1 for proper waste disposal practices.

1. Principle of Method

1.1. Radionuclides of uranium are isolated from ashed and acid-dissolved tissue samples.

1.2. An aliquot of the tissue sample solution is selected for analysis based on wet sample mass and estimated sample alpha activity.

1.3. Uranium-232 tracer is added to the aliquot. Uranium is isolated by anion exchange and is electroplated on stainless-steel disks.

1.4. Concentrations of ^{234}U, ^{235}U, and ^{238}U are determined by alpha spectrometry.

1.5. Chemical losses are identified and corrected on the basis of the recovery of the added ^{232}U tracer.

2. Sensitivity

2.1. Sensitivity is limited by the counter background.

2.2. For routine measurements with a 70,000-s counting period, a tracer recovery of 60%, and a counting efficiency of 17%, the minimum detectable activity (the 95th percentile of the background distribution) is 0.001 Bq per sample (0.06 dis/min) of ^{234}U and ^{238}U. This amount of ^{238}U alpha activity is

equivalent to 0.06 μg of normal uranium (0.0715% ^{235}U) if the ratio of $^{238}U/^{234}U$ activity is equal to one and the sample is known to contain only normal uranium.

NOTE: Measurement of samples for their concentrations of ^{235}U will be less exact because of the possible tailing of ^{234}U into the energy spectrum area of ^{235}U. Measurement of samples for ^{235}U concentration may require special counting measures to resolve the ^{234}U and ^{235}U energy peaks (e.g., lower counting efficiency and longer counting periods).

3. Accuracy and Precision

3.1. Average recovery of ^{232}U tracer is equal to 90% ± 8% at the 0.07 Bq (4.2 dis/min) concentration level.

4. Apparatus

4.1. Beakers: 100- and 250-mL.

4.2. Watch glasses: assorted sizes to fit beakers used.

4.3. Ion-exchange columns (Fig. 1): borosilicate glass column, 130-mm-long by 17-mm-o.d. (14-mm-i.d.), with a reservoir at the top, 80-mm-long by 35-mm-o.d., and a stopcock at the bottom.

4.4. Ion-exchange columns (Fig 2.): borosilicate glass barrel with polypropylene reservoir, column tip, and bed support, 14 cm long by 0.7 cm i.d., Catalog No. 737-1222, Bio-Rad Laboratories, Chemical Division Sales Office, 2200 Wright Avenue, Richmond, CA 94804.

4.5. Rack: equipped with three-prong clamps to support ion exchange columns.

4.6. Fume hood.

4.7. Graduated cylinders: 100- and 1000-mL.

4.8. Hot plates: Thermolyne Model 2200 or equivalent.

4.9. Glass wool: Pyrex.

4.10. Magnetic stirring hot plates: Corning PC 351 or equivalent.

4.11. Stirring bars: 1-in., Teflon-coated.

5. Reagents

5.1. Bio-Rad anion-exchange resin (AG 1-X4, 100-200 mesh) chloride form. Add 500 mL of 0.6 M HCl to one pound of resin, shake thoroughly, allow to settle, and decant the solution along with the fines.

5.2. Hydrochloric acid (concentrated 36.5-38%, reagent-grade).

5.3. Hydrochloric acid (8 M). Add 670 mL of concentrated HCl to 330 mL of distilled H_2O.

5.4. Hydrochloric acid (1.2 M). Add 100 mL of concentrated HCl to 900 mL of distilled H_2O.

5.5. Hydrochloric acid (0.6 M). Add 50 mL of concentrated HCl to 950 mL of distilled H_2O.

5.6. Nitric acid (concentrated 69-71%, reagent-grade).

5.7. Nitric acid (8 M). Add 500 mL of concentrated HNO_3 to 500 mL of distilled H_2O.

6. Procedure

6.1. Sample preparation.

6.1.1. Refer to procedure RT100, Tissue Ashing, Sample Dissolution, Sample Aliquot Selection, and Tracer Addition for Anion Exchange Isolation of Radionuclides, for sample preparation.

NOTE: If the samples contain plutonium, it should be removed using procedure RT200, Anion Exchange Isolation of Plutonium from Prepared Tissue Solutions. Then follow this procedure using the small columns mentioned in 6.3.11.

6.2. Sample dissolution.

6.2.1. To the previously prepared sample, add enough 8 M HCl to completely dissolve the sample when heated to 120°C on a hot plate. Use stirring hot plates and magnetic stirring bars to hasten the dissolution of large samples. Cover the beaker with a watch glass while heating.

6.2.2. Remove the sample from the hot plate and allow it to cool to room temperature.

6.3. Anion exchange separation.

6.3.1. Tamp a glass wool plug, approximately 1 cm thick, firmly into the ion exchange column. Place a 400-mL beaker under the column.

6.3.2. Using a graduated cylinder and H_2O, measure a 12-mL volume above the glass wool plug and mark the column at this level. Drain off the water.

6.3.3. Fill the column with a slurry of AG 1-X4 resin in 0.6 M HCl to a settled volume of 12 mL.

6.3.4. Wash the column with 5 column volumes of 8 M HCl and allow the solution to drain to the top of the resin.

6.3.5. Transfer the sample from Step 6.2.2. to the ion exchange column.

6.3.6. Rinse the beaker twice with 5 mL of 8 M HCl. Add rinses to the column. Allow sample and rinses to drain down to the top of the resin.

6.3.7. Wash the column with 7 column volumes of 8 M HCl. Allow the solution to drain to the top of the resin.

6.3.8. Wash the column with 2.5 column volumes of 8 M HNO_3. This will remove iron from the resin bed.

NOTE: This amount of acid will not remove all of the iron, but if larger amounts of 8 M HNO_3 are used, uranium will also be removed from the resin bed.

6.3.9. After all the wash solution has drained through the column, replace the 400-mL beaker with a 100-mL beaker.

6.3.10. Elute the uranium with an additional 7.5 column volumes of 8 M HNO_3.

6.3.11. Place the sample beaker on a hot plate with a surface temperature of 100-120°C and evaporate the sample to dryness.

NOTE: If the eluted sample contains noticeable amounts of iron in the elution residue, as evidenced by yellow color on the bottom of the beaker, a second ion-exchange separation is required. Repeat Steps 6.2.1 through 6.3.10, dissolving the sample in only 10 mL of 8 M HCl and using 3 mL of resin in the small ion-exchange column shown in Fig. 2.

6.4. Proceed to procedure RT500, Electroplating Americium, Plutonium, and Uranium.

7. Proper Waste Disposal Practices

7.1. Discard the solution from Step 6.3.8 into the acid waste system according to Source Material 8.1.

8. Source Material

8.1. "Chemical, Hazardous, and Mixed Waste," Administrative Requirement 10-3, in *Environment, Safety, and Health Manual*, Los Alamos National Laboratory Manual, Chapter 1 (most recent edition).

Revisions or additions to the procedure are marked (▒▒▒▒). Where a section heading is marked, the entire section has been revised.

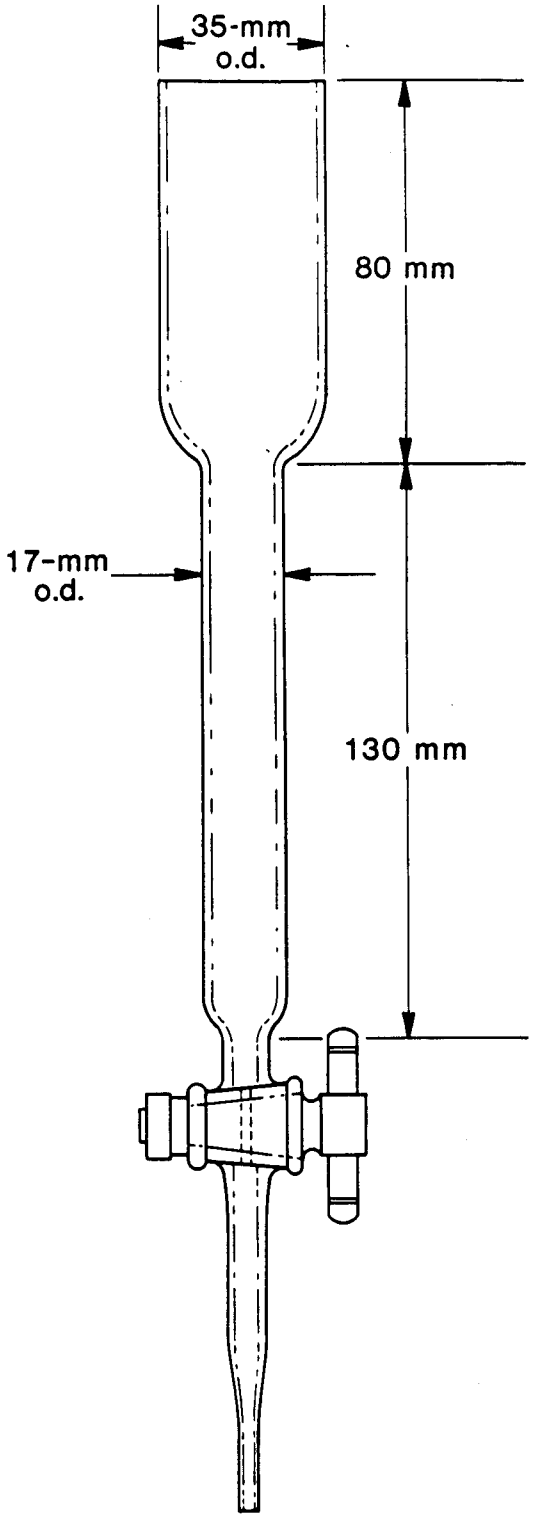

Fig. 1. Ion exchange column for uranium.

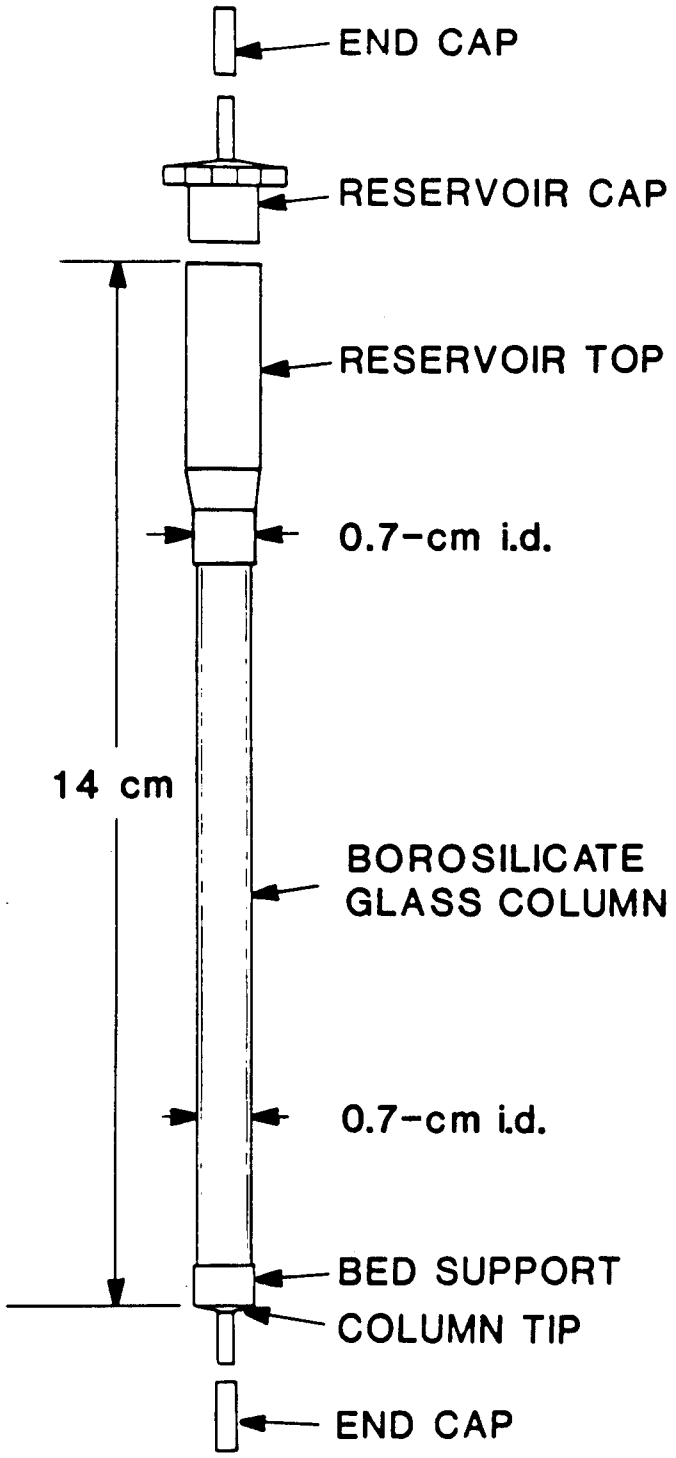

Fig. 2. Ion exchange for second uranium ion exchange separation.

ELECTROPLATING AMERICIUM, PLUTONIUM, THORIUM, AND URANIUM

Analyte: Americium, plutonium, uranium, and thorium	**Method No.:** RT500
Principle: Electroplating americium, plutonium, thorium, and uranium from a sulfate electrolyte	
Effective Date: 10/01/79	**Authors:** Edward Gonzales Steve Goldstein Daryl Knab

SAFETY NOTE: Before beginning this procedure, read all of the Material Safety Data Sheets for the chemicals listed in Sec. 3. Read Sec. 4.3. of the EM-9 Safety Manual for information on personal protective clothing and equipment. Read Sec. 6 of this procedure and Source Material 7.3 and 7.4 for proper waste disposal practices.

1. Principle of Method

1.1. Radionuclides isolated using the anion-exchange procedures for americium, plutonium, thorium, and uranium are electroplated from a sulfate electrolyte on electropolished stainless-steel disks.

2. Apparatus

2.1. Stainless-steel disks: 1.59-cm (5/8-in.)-diam disk, fabricated from 20-mil 316 stainless steel cold-rolled or No. 4 finish.

2.2. Coin holders.

2.3. Electrolytic cell: polyethylene cell body (Fig. 1).

2.4. Plastic covers for cells.

2.5. Electrodeposition apparatus: dc power supply to provide up to 550 mA of regulated current to each electrolytic cell.

NOTE: If separate units cannot be used for electropolishing and electroplating, the platinum electrodes must be cleaned by soaking in HNO_3 for several hours between these steps.

2.6. Hot plate.

2.7. Pasteur pipettes.

2.8. Rubber bulbs: to fit Pasteur pipettes.

3. Reagents

3.1. Sulfuric acid (concentrated, reagent-grade).

3.2. Phosphoric acid (concentrated, reagent-grade).

3.3. Thymol blue indicator. Mix 0.2 g of thymol blue powder with 21.5 mL of 0.02 M NaOH and dilute to 500 mL with distilled H_2O.

3.4. Sulfuric acid (0.18 M). Mix 10 mL of concentrated sulfuric acid with 990 mL of distilled H_2O.

3.5. Ammonium hydroxide (concentrated, reagent-grade).

3.6. Ammonium hydroxide (1.5 M). Mix 100 mL of concentrated NH_4OH with 900 mL of distilled water.

3.7. NH_3 gas from NH_4OH. Pass a stream of air through warm (approximately 80-90°C) ammonium hydroxide.

3.8. Sulfuric acid (9M). Add 500 mL of concentrated sulfuric acid to 500 mL of distilled H_2O.

CAUTION: Solution gets very hot. Mix in a Pyrex beaker.

3.9. Electropolishing solution. Add 450 mL of concentrated H_3PO_4 and 350 mL of concentrated H_2SO_4 to 200 mL of distilled H_2O.

3.10. Ethanol absolute.

4. Electropolishing Sample Disks

4.1. Assemble cells by placing a prenumbered disk (numbered side down) into the bottom depression of the cap and screw together. Tighten with pliers.

4.2. Add 6 mL of electropolishing solution to each cell.

4.3. Place each cell in the electrodeposition rack and attach the cathode to the cell cap.

4.4. Turn on the main power switch of the electrodeposition unit. Turn the switch on each unit to negative.

4.5. Electropolish the blank disks for 7 min at 1.0 A.

NOTE: Clean the platinum electrodes with nitric acid between electropolishing and electroplating to prevent polonium contamination from the electropolishing solution and to prevent the plating of iron.

4.6. Turn off the main power switch.

4.7. Remove the plating cells and rinse with distilled H_2O. Again tighten cell cap with pliers.

5. Electrodeposition

5.1. Add 0.6 mL of 9 M H_2SO_4 to the sample and heat until the H_2SO_4 fumes. Heat an additional 10 min.

5.2. Allow the sample to cool. Wash down the sides of the beaker with 3 mL of distilled H_2O and add 1 drop of thymol blue indicator.

5.3. Adjust color to a salmon pink end point using NH_3 gas.

5.4. Transfer the solution to a plating cell using a Pasteur pipette. Rinse the beaker twice with 1.5 mL of 0.18 M H_2SO_4. Add the rinses to the plating cell.

5.5. Adjust the solution in the plating cell to a salmon pink end point (pH 2-2.3) using NH_3 gas.

5.6. Place the cell in the electrodeposition rack and cover with a plastic cover. Attach cathode lead to the cell cap.

5.7. Turn on the main power switch of the electrodeposition unit. Turn the switch on each unit to positive and set the current to 0.55 A.

5.8. Electroplate plutonium, thorium, and uranium for 2 h and americium for 2.5 h.

5.9. Fill the cell with 1.5 M NH_4OH and continue plating for 1 min.

5.10. Turn off main power switch of electrodeposition unit.

5.11. Disconnect the cathode lead.

5.12. Remove plating cell from rack and discard contents into the acid waste system.

5.13. Rinse plating cell three times with distilled water.

5.14. Disassemble the cell, rinse disk with H_2O, and air dry.

5.15. Heat disk for 5-10 min on a hot plate set at 225-250°C to dry.

5.16. Place the disk in a coin holder, label the holder with sample set number, and submit to count room for alpha spectrometric measurement.

5.17. Proceed to procedure RT600 (americium), RT700 (plutonium), RT750 (thorium), or RT800 (uranium) for Alpha Spectrometry Measurement for Radionuclides.

6. Proper Waste Disposal Practices

6.1. Dispose of the electrodeposition supernate in the acid waste system.

6.2. Retain the plates for five years and then discard in the radioactive waste container in Room 114 according to SOP 2.

7. Source Materials

7.1. H. A. Boyd, B. C. Eutsler, J. F. McInroy, "Determinations of Americium and Plutonium in Autopsy Tissue: Methods and Problems," in *Actinides in Man and Animals*, Proceedings of the Snowbird Actinide Workshop, Oct. 15-17, 1979, M. E. Wrenn, scientific editor (R. D. Press, Salt Lake City, Utah, 1981), pp. 43-52.

7.2. N. A. Talvitie, "Electrodeposition of Actinides for Alpha Spectrometric Determination," *Anal. Chem.* **44**, 280-283 (1972).

7.3. "Chemical, Hazardous, and Mixed Waste," Administrative Requirement 10-3 in *Environment, Safety, and Health Manual*, Los Alamos National Laboratory Manual, Chapter 1 (most recent edition).

7.4. "Disposal of Solid Radioactive Waste from EM-9 Group Areas at TA-59, OH-1," Environmental Chemistry Group: ES&H Program, Appendix III, SOP 2.

Revisions or additions to the procedure are marked (). Where a section heading is marked, the entire section has been revised.

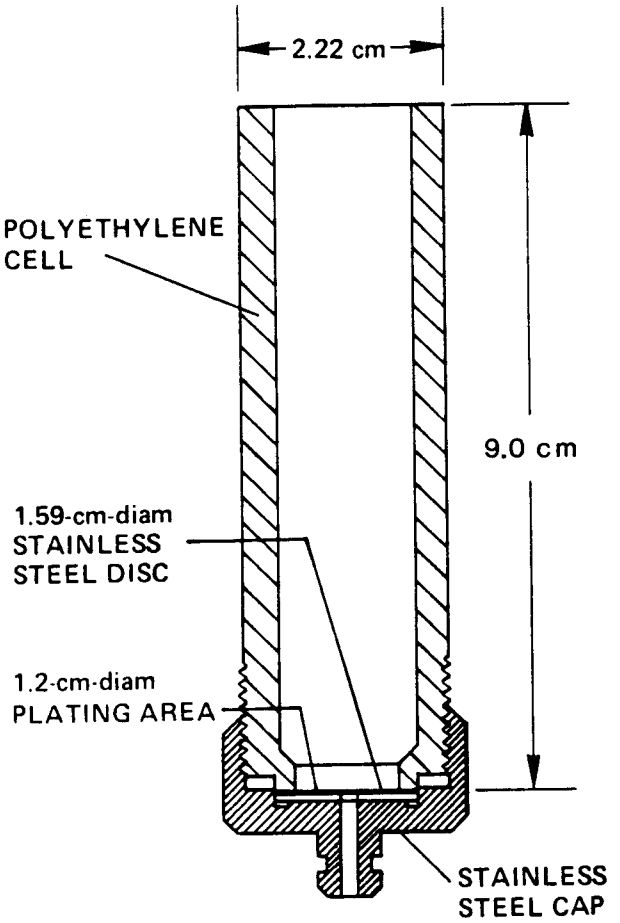

Fig. 1. Electrolytic cell.

ALPHA SPECTROMETRY MEASUREMENT FOR RADIONUCLIDES OF AMERICIUM

Procedure: Measurement by alpha spectrometry of alpha activity on electroplated disks	**Method No.:** RT600
Effective Date: 01/01/86	**Authors:** William D. Moss George H. Brooks

SAFETY NOTE: Before beginning this procedure, read Sec. 4.3 of the EM-9 Safety Manual for information on personal protective clothing and equipment. Read Sec. 6 of this procedure for proper waste disposal practices.

1. Principle of Method

1.1. Electroplated samples containing americium are measured for alpha activity using alpha spectrometry.

1.2. Detection limits for alpha activity are based on instrument background count data collected in energy areas associated with the alpha decay spectrum for each nuclide of interest and recovery of radiotracer added to each sample.

1.3. Multinuclide alpha secondary standards (No. EM-9-16, ^{241}Am, ^{239}Pu, and ^{242}Pu) are used to set the alpha spectrometer energy peak locations and determine the counting efficiency of each of the 16 detectors.

1.4. Quality control records are maintained on each detector's background and counting efficiency and used to determine if the detector is out of control relative to its previously established mean counting efficiency and background profile. See Fig. 1.

1.5. Detection of 0.001 Bq (0.06 dis/min) of ^{241}Am is achieved with 95% confidence from prepared plates that have better than 60% tracer recovery and a mean background of <4 counts in 70 000 s. Detectors that have background counts >10 counts on two consecutive measurements are considered out of control.

2. Apparatus

2.1. Alpha spectrometer: Canberra Series 35 Plus, 4096-channel analyzer, equipped with sixteen 300- or 450-mm^2 silicon surface barrier detectors.

3. Calibration and Standards for Americium

3.1. Use multielement electroplated secondary standards containing ^{242}Pu, ^{239}Pu, and ^{241}Am. Average total gross activity of the plates is 2045 dis/min (^{242}Pu = 30.6%, ^{239}Pu = 35.2%, and ^{241}Am = 34.2%).

3.2. Calibrate the spectrometer to record, in 128 channels per detector, alpha activity with alpha decay energies between 4 and 6 MeV. Table I lists the counts recorded for the location of ^{241}Am, ^{239}Pu, and ^{242}Pu peaks that are used to calibrate each detector.

3.3. Set the energy peak locations as follows:

Isotope	Energy, MeV	Peak channel	Integration channels
^{242}Pu	4.9	46	39 to 52
^{239}Pu	5.15	70	63 to 76
^{241}Am	5.5	106	99 to 112

3.4. Response to the detection of alpha particles for each nuclide decay energy is linear over the energy range between 3.5 and 6 MeV. Integrate counts recorded in 1020 s over 14 channels (7 channels to the left of the energy peak and 6 channels to the right of the peak) of the energy spectrum for the ^{242}Pu isotope. This estimate of counting efficiency is used to calculate a "relative estimate" of the chemical recovery of the ^{243}Am tracer added to each sample. Samples with tracer recovery less than 60% should be reanalyzed as a matter of good laboratory practice.

NOTE: Tracer recovery is a relative term and will be a function of the sample energy resolution compared against the calibration energy plate resolution. The term "percent tracer recovery" is not used to calculate concentration of the unknown analyte and is recorded only to reflect the relative quality of tracer data.

3.5. Spectra that are not degraded because of excess Fe or other material deposited on the electroplated sample disk will have full-width half-maximum (FWHM) energy resolution of less than 50 keV. Spectra with greater than 50 keV FWHM energy resolution should be reanalyzed as a matter of good practice when the apparent sample counts in the area of ^{241}Am are equivalent to the detector background counts and the ^{243}Am tracer recovery is less than 60%.

4. Calculation of Sample Concentration for Americium Content

4.1. Samples are counted for 70,000 s for the Bioassay program and for 80,000 s for the Environmental Program.

4.2. A measurement data sheet from the alpha spectrometer, supplied by the count room, will list the recorded counts by channel location. Areas selected by the calibration for americium isotope integration are:

Isotope	Energy, MeV	Peak channel	Integration channels
^{243}Am	5.28	84	77 to 90
^{241}Am	5.5	106	99 to 112

These same areas are used to determine detector background activity for each nuclide. The calibration and background measurements are made before sample measurement.

4.3. Americium-243 tracer recovery factor.

$$R = \frac{Ct - Cb}{T \times D} ,$$

where Ct = tracer counts in isotope integrated area,
Cb = background counts in isotope integrated area,
T = count length (1167 min),
D = tracer activity (dis/min), and
R = recovery factor for ^{243}Am.

4.4. Tracer recovery factor relative to detector counting efficiency.

$$RT = \frac{R}{G} ,$$

where R = recovery factor for ^{243}Am,
G = counting efficiency (will average 0.30 for each detector), and
RT = chemical recovery (expressed as a fraction).

4.5. The following equation is used to calculate ^{241}Am concentrations:

$$\text{dis/min/sample volume} = \frac{(Cs - Cb) \times Vs}{T \times Va \times R} ,$$

where Cs = sample counts in isotope integrated area,
Cb = background counts in isotope integrated area,
Vs = sample volume (mL),
Va = sample aliquot volume (mL),
R = tracer recovery factor, and
T = count length (1167 min).

5. Detection Limits

5.1. The minimum detectable amount (MDA) of americium alpha activity determined by this procedure is a function of the instrument background counts in the energy area of the ^{241}Am, the percent tracer recovery, and the counting efficiency of the system.

5.2. Calculation of MDA.

$$MDA = \frac{(4.65 \times S_b + 3)}{E \times RT \times T} ,$$

where 4.65 = constant necessary to achieve desired protection against Type I and Type II statistical errors at the 0.05 confidence level,

3 = constant to allow for error of small-count statistics associated with Poisson distributions,

S_b = the standard deviation of the population of counts obtained from the analysis of chemical reagent blank quality control samples (see note below),

E = detector counting efficiency (expressed as a fraction),

RT = chemical recovery (expressed as a fraction), and

T = standardized sample counting time (1167 min).

NOTE: Blanks are processed as samples and are analyzed concurrently with sets of tissue samples. The blank counts for the americium sample average 3 counts per 70 000 s, and the estimated value of S_b is the square root of 3, or 1.73.

5.3. The MDA for a sample using this formula would be 0.06 dis/min or 0.001 Bq per sample aliquot. The calculation assumes a mean recovery of the tracer of 60%, a mean background of 3 counts, a 1167-min count length, and a counting efficiency of 30%. MDAs are calculated for each reported sample. Correction for sample volume is not included in the above formula, and this factor must be taken into account when results are expressed per total sample volume.

5.4. If results are to be reported in Bq, divide the dis/min by 60.

6. Proper Waste Disposal Practices

6.1. This procedure does not generate any waste.

7. Source Materials

7.1. L. A. Currie, "Limits for Qualitative Detection and Quantitative Determination," *Anal. Chem.* **40**, 586-593 (1968).

7.2. L. A. Currie, "Lower Limit of Detection: Definition and Elaboration of a Proposed Position for Radiological Effluent and Environmental Measurements," U.S. Nuclear Regulatory Commission report NUREG/CR-4007 (September 1984).

Revisions or additions to the procedure are marked (▒▒▒▒). Where a section heading is marked, the entire section has been revised.

TABLE I. ENERGY SPECTRUM FOR ALPHA SPECTROMETER

Channel	Counts		Channel	Counts	
31			76	7	
32			77	11*	
33			78	14	
34	1		79	31	
35	5		80	41	
36	5		81	68	
37	8		82	110	
38	13*		83	194	
39	37		84	279	— Peak ^{243}Am
40	56		85	260	(5.28 MeV)
41	105		86	102	
42	148		87	43	
43	189		88	24	
44	257		89	31	
45	392		90	21 *	
46	626	—Peak ^{242}Pu	91	12	
47	510	(4.9 MeV)	92	12	
48	123		93	3	
49	4		94	2	
50	0		95		
51	0		96	1	
52	0		97	2	
53			98	7 *	
54			99	18	
55			100	29	
56			101	35	
57			102	44	
58			103	56	
59			104	72	
60			105	84	—Peak ^{238}Pu
61			106	72	^{241}Am
62			107	34	(5.5 MeV)
63			108	7	
64			109	5	
65			110	0	
66			111	0 *	
67			112		
68			113		
69			114		
70		—Peak ^{239}Pu	115		
71		(5.15 MeV)	116		
72			117		
73			118		
74			119		
75	6		120		

***Counts integrated over 14 channels, 7 to the left and 6 to the right of the energy peak.**

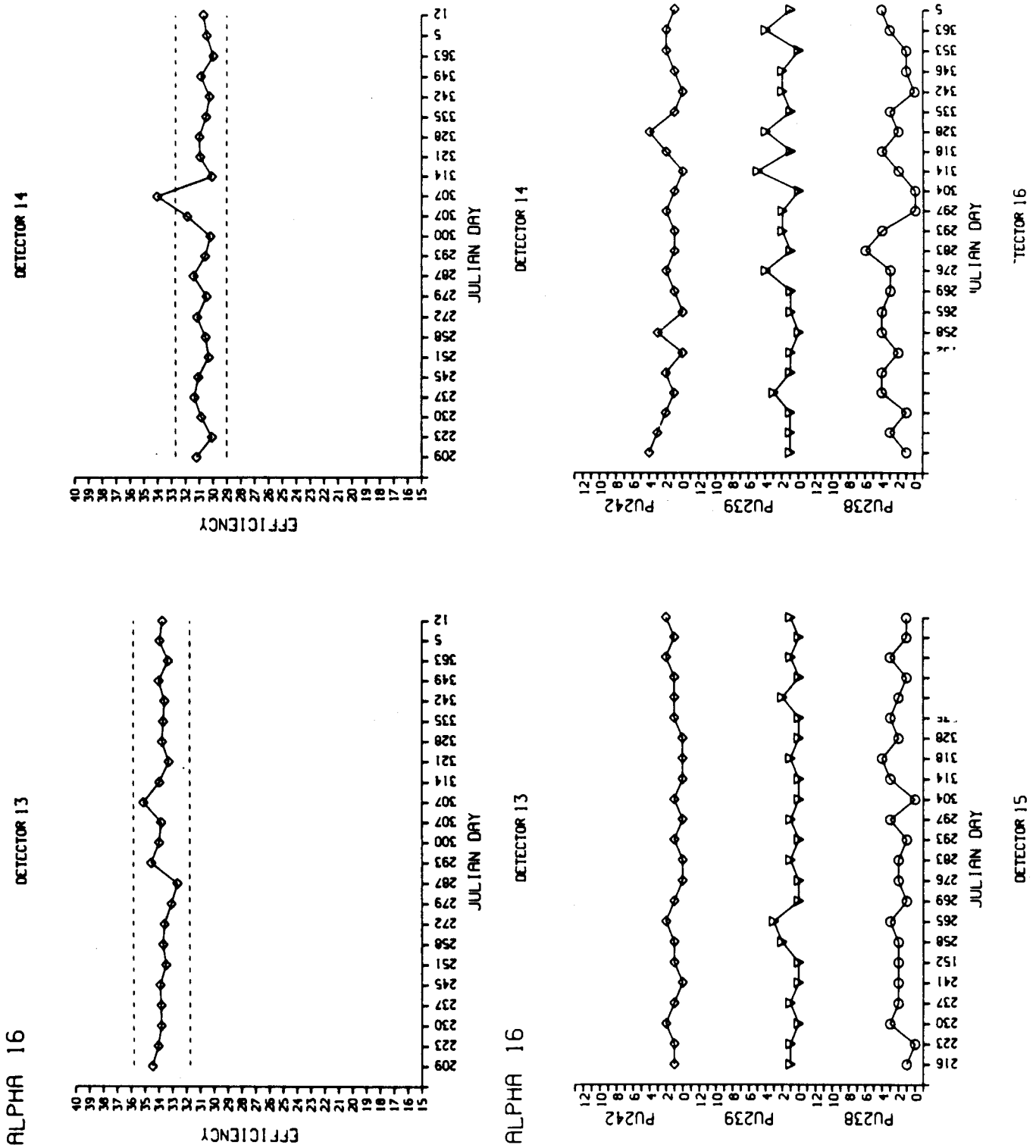

Fig. 1. Calibration and background plots.

ALPHA SPECTROMETRY MEASUREMENT FOR RADIONUCLIDES OF PLUTONIUM

Procedure: Measurement by alpha spectrometry of alpha activity on electroplated disks	**Method No.:** RT700
Effective Date: 01/01/86	**Authors:** William D. Moss George H. Brooks

SAFETY NOTE: Before beginning this procedure, read Sec. 4.3 of the EM-9 Safety Manual for information on personal protective clothing and equipment. Read Sec. 6 of this procedure for proper waste disposal practices.

1. Principle of Method

1.1. Electroplated samples containing plutonium are measured for alpha activity using alpha spectrometry.

1.2. Detection limits for alpha activity are based on instrument background count data collected in energy areas associated with the alpha decay spectrum for each nuclide of interest and recovery of radiotracer added to each sample.

1.3. Multinuclide alpha secondary standards (No. EM-9-16, ^{241}Am, ^{239}Pu, and ^{242}Pu) are used to set the alpha spectrometer energy peak locations and determine the counting efficiency of each of the 16 detectors.

1.4. Quality control records are maintained on each detector's background and counting efficiency and used to determine if the detector is out of control relative to its previously established mean counting efficiency and background profile. See Fig. 1.

1.5. Detection of 0.001 Bq (0.06 dis/min) of ^{238}Pu and ^{239}Pu is achieved with 95% confidence from prepared plates that have better than 60% tracer recovery and a mean background of <4 counts in 70 000 s. Detectors that have background counts >10 counts on two consecutive measurements are considered out of control.

2. Apparatus

2.1. Alpha spectrometer: Canberra Series 35 Plus, 4096-channel analyzer, equipped with sixteen 300- or 450-mm^2 silicon surface barrier detectors.

3. Calibration and Standards for Plutonium

3.1. Use multielement electroplated secondary standards containing ^{242}Pu, ^{239}Pu, and ^{241}Am. Average total gross activity of the plates is 2045 dis/min (^{242}Pu - 30.6%, ^{239}Pu = 35.2%, and ^{241}Am = 34.2%).

3.2. Calibrate the spectrometer to record, in 128 channels per detector, alpha activity with decay energies between 4 and 6 MeV. Table I lists the counts recorded for the location of ^{241}Am, ^{239}Pu, and ^{242}Pu peaks that are used to calibrate each detector.

3.3. Set the energy peak locations as follows:

Isotope	Energy, MeV	Peak channel	Integration channels
^{242}Pu	4.9	46	34 to 52
^{239}Pu	5.15	70	58 to 76
^{241}Am	5.5	106	94 to 112

3.4. Response to the detection of alpha particles for each nuclide decay energy is linear over the energy range between 3.5 and 6 MeV. Integrate counts recorded in 1020 s over 19 channels (12 channels to the left of the energy peak and 6 channels to the right of the peak) of the energy spectrum for the ^{242}Pu isotope. This estimate of counting efficiency is used to calculate a "relative estimate" of the chemical recovery of the ^{242}Pu tracer added to each sample. Samples with tracer recovery less than 60% should be reanalyzed as a matter of good laboratory practice.

NOTE: Tracer recovery is a relative term and will depend on the sample energy resolution compared with the calibration energy plate resolution. The percent tracer recovery is not used to calculate concentration of the unknown analyte and is recorded only to reflect the relative quality of tracer data.

3.5. Spectra that are not degraded because of excess Fe or other material deposited on the electroplated sample disk will have full-width half-maximum (FWHM) energy resolution of less than 50 keV. Spectra with greater than 50 keV FWHM energy resolution should be reanalyzed as a matter of good practice when the apparent sample counts in the area of ^{239}Pu and ^{238}Pu are equivalent to the detector background counts and the ^{242}Pu tracer recovery is less than 60%.

4. Calculation of Sample Concentration for Plutonium Content

4.1. Samples are counted for 70,000 s for the Bioassay program, 80,000 s for the Environmental Program.

4.2. A measurement data sheet from the alpha spectrometer, supplied by the count room, will list the recorded counts by channel location. Areas selected by the calibration for plutonium isotope integration are:

Isotope	Energy, MeV	Peak channel	Integration channels
^{242}Pu	4.9	46	34 to 53
^{239}Pu	5.15	70	58 to 76
^{238}Pu	5.5	106	94 to 112

These same areas are used to determine detector background activity for each nuclide. The calibration and background measurements are made before sample measurement.

4.3. Plutonium-242 tracer recovery factor.

$$R = \frac{Ct - Cb}{T \times D} ,$$

where Ct = tracer counts in isotope integrated area,
Cb = background counts in isotope integrated area,
T = count length (1167 min),
D = tracer activity (dis/min), and
R = recovery factor for ^{242}Pu.

4.4. Tracer recovery factor relative to detector counting efficiency.

$$RT = \frac{R}{G} ,$$

where R = recovery factor for ^{242}Pu,
G = counting efficiency (will average 0.30 for each detector), and
RT = chemical recovery (expressed as a fraction).

4.5. The following equation is used to calculate ^{238}Pu and ^{239}Pu concentrations:

$$\text{dis/min/sample volume} = \frac{(Cs - Cb) \times Vs}{T \times Va \times R} ,$$

where Cs = sample counts in isotope integrated area,
Cb = background counts in isotope integrated area,
Vs = sample volume (mL),
Va = sample aliquot volume (mL),
R = tracer recovery factor, and
T = count length (1167 min).

5. Detection Limits

5.1. The minimum detectable amount (MDA) of plutonium alpha activity determined by this procedure depends on the instrument background counts in the energy areas of the ^{239}Pu and ^{238}Pu, the percent tracer recovery, and the counting efficiency of the system.

5.2. Calculation of MDA.

$$MDA = \frac{(4.65 \times S_b + 3)}{E \times RT \times T},$$

where 4.65 = constant necessary to achieve desired protection against Type I and Type II statistical errors at the 0.05 confidence level,

3 = constant to allow for error of small-count statistics associated with Poisson distributions,

S_b = the standard deviation of the population of counts obtained from the analysis of chemical reagent blank quality control samples (see note below),

E = detector counting efficiency (expressed as a fraction),

RT = chemical recovery (expressed as a fraction), and

T = standardized sample counting time (1167 min).

NOTE: Blanks are processed as samples and are analyzed concurrently with sets of tissue samples. The blank counts for the plutonium samples average 3 counts per 70 000 s, and the estimated value of S_b is the square root of 3, or 1.73.

5.3. The MDA for a sample using this formula would be 0.06 dis/min or 0.001 Bq per sample aliquot. The calculation assumes a mean recovery of the tracer of 60%, a mean background of 3 counts, a 1167-min count length, and a counting efficiency of 30%. MDAs are calculated for each reported sample. Correction for sample volume is not included in the above formula, and this factor must be taken into account when results are expressed per total sample volume.

5.4. If results are to be reported in Bq, divide the dis/min by 60.

6. Proper Waste Disposal Practices

6.1. This procedure does not generate any waste.

7. Source Materials

7.1. L. A. Currie, "Limits for Qualitative Detection and Quantitative Determination," *Anal. Chem.* 40, 586-593 (1968).

7.2. L. A. Currie, "Lower Limit of Detection: Definition and Elaboration of a Proposed Position for Radiological Effluent and Environmental Measurements," U.S. Nuclear Regulatory Commission report NUREG/CR-4007 (September 1984).

Revisions or additions to the procedure are marked (▒▒▒▒). Where a section heading is marked, the entire section has been revised.

TABLE I. ENERGY SPECTRUM FOR ALPHA SPECTROMETER

Channel	Counts	Channel	Counts	Channel	Counts
31		61	6	91	12
32		62	7	92	12
33		63	11	93	3 *
34	1 *	64	14	94	2
35	5	65	31	95	0
36	5	66	41	96	1
37	8	67	68	97	2
38	13	68	110	98	7
39	37	69	194	99	18
40	56	70	279 —Peak ^{239}Pu	100	29
41	105	71	260 (5.15 MeV)	101	35
42	148	72	102	102	44
43	189	73	43	103	56
44	257	74	24	104	72
45	392	75	31	105	84 —Peak ^{238}Pu
46	626 —Peak ^{242}Pu	76	21 *	106	72 ^{241}Am
47	510 (4.9 MeV)	77		107	34 (5.5 MeV)
48	123	78		108	7
49	4	79		109	5
50	0	80		110	0
51	0	81		111	0 *
52	0 *	82		112	
53		83		113	
54		84		114	
55		85		115	
56		86		116	
57		87		117	
58	0 *	88		118	
59	0	89		119	
60	0	90		120	

***Counts integrated over 19 channels, 12 to the left and 6 to the right of the energy peak.**

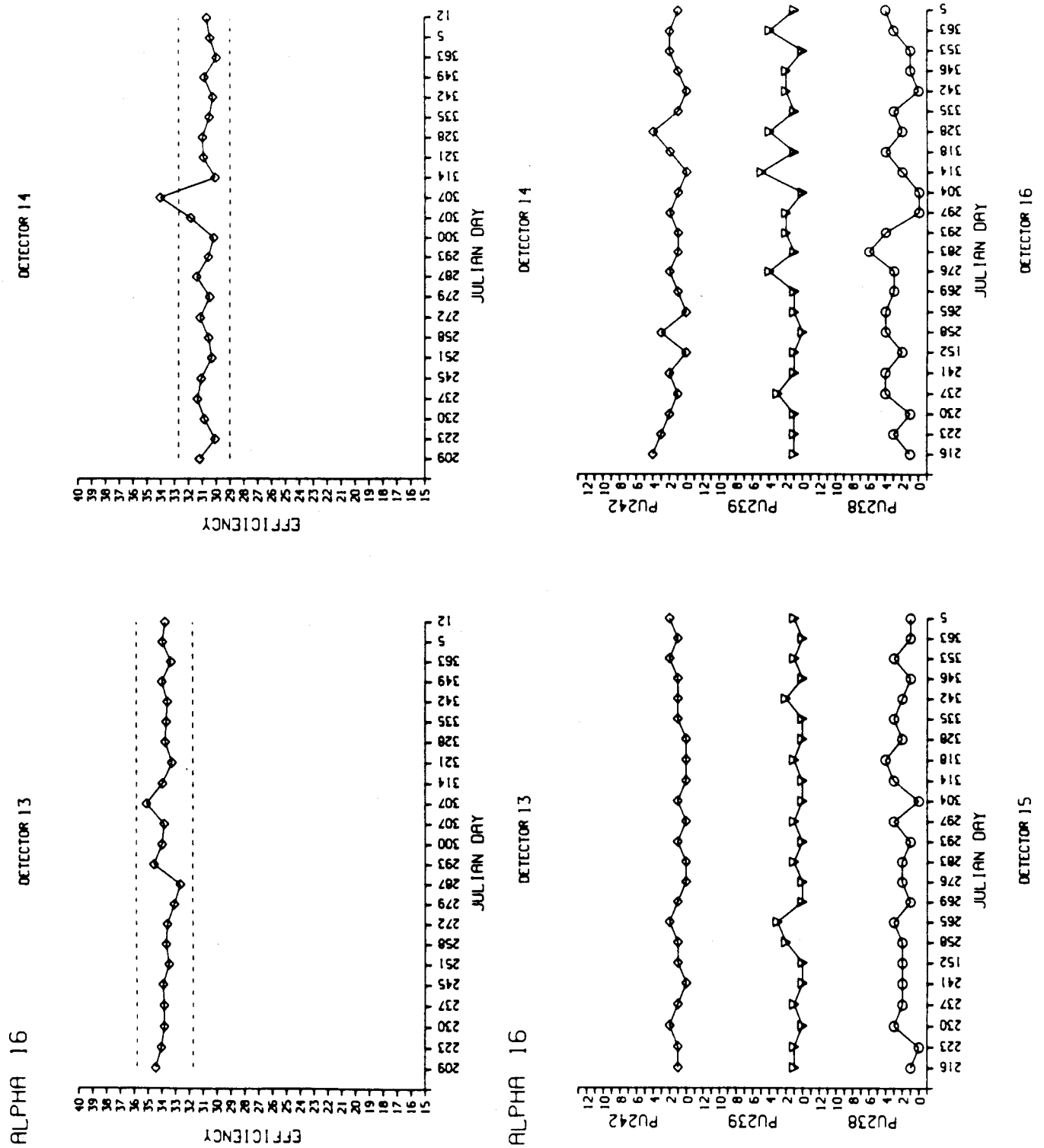

Fig. 1. Calibration and background plots.

ALPHA SPECTROMETRY MEASUREMENT FOR RADIONUCLIDES OF THORIUM

Procedure: Measurement by alpha spectrometry of alpha activity on electroplated disks	**Method No.:** RT750
Effective Date: 07/11/90	**Authors:** George H. Brooks Daryl Knab

SAFETY NOTE: Read Section 4.3 of the EM-9 Safety Manual for information on personal protective clothing and equipment. Read Sec. 7 of this procedure and Source Material 8.3 for proper waste disposal practices.

1. Principle of Method

1.1. Electroplated samples containing thorium are measured for alpha activity using alpha spectrometry.

1.2. Detection limits for alpha activity are based on (1) instrument background-count data collected in energy areas associated with the alpha decay spectrum for each nuclide of interest and (2) recovery of radiotracer added to each sample.

1.3. Multinuclide alpha secondary standards (EM-9-16, ^{241}Am, ^{239}Pu, and ^{242}Pu) are used to set the alpha spectrometer energy peak locations and to determine the counting efficiency of each of the 16 detectors.

1.4. Quality-control records on each detector's background and counting efficiency are maintained and used to determine if the detector is out of control relative to its previously established mean counting efficiency and background profile. See the EM-9 Nuclear Counting Facilities Operation Procedure No. CR370 for a more detailed explanation of the quality-control factors and their use in the Alpha Counting Facility.

2. Apparatus

2.1. Alpha spectrometer: Canberra Series 35 Plus or equivalent, 4096-channel analyzer, 16-input mixer/router, analog-to-digital converter, equipped with sixteen 300-mm^2 silicon surface-barrier detectors (100-μm depletion depth), and a preamp.

3. Calibration and Standards for Thorium

3.1. Use multielement electroplated secondary standards containing ^{242}Pu, ^{239}Pu, and ^{241}Am. Total gross mean activity of the plates (^{242}Pu = 34.6%, ^{239}Pu = 15.8%, and ^{241}Am = 49.5%) is approximately 2084 dis/min.

3.2. Calibrate the 96 alpha spectrometer to record, in 128 channels per detector, alpha activity with decay energies between 3.6 and 5.6 MeV. Table I lists the counts recorded for the location of ^{242}Pu, ^{239}Pu, and ^{241}Am peaks that are used to calibrate each detector.

TABLE I. ENERGY SPECTRUM FOR ALPHA SPECTROMETER

Channel	Counts	Channel	Counts
70	0	100	40
71	0	101	7
72	40 *	102	2 *
73	59	103	0
74	80	104	0
75	119	105	0
76	196	106	0
77	260	107	0
78	346	108	0
79	390	109	0
80	463 — Peak ^{242}Pu	110	0
81	406 (4.9 MeV)	111	0
82	187	112	33 *
83	32	113	63
84	4	114	87
85	0	115	124
86	0	116	194
87	0	117	399
88	0	118	374
89	0	119	510
90	16*	120	613 — Peak ^{241}Am,
91	37	121	569 ^{238}Pu
92	48	122	368 (5.5 MeV)
93	84	123	154
94	72	124	74 *
95	122	125	0
96	171	126	0
97	196	127	0
98	235 — Peak ^{239}Pu	128	0
99	142 (5.15 MeV)		

* Counts are integrated 240 KeV to the left and 120 keV to the right of the energy peak.

3.3. Set the energy peak locations as follows:

Isotope	Energy, MeV	Peak channel	Integration channels
^{242}Pu	4.9	80	72 to 84
^{239}Pu	5.15	100	90 to 102
^{241}Am	5.5	120	112 to 124

3.4. Response to the detection of the alpha particles for each nuclide decay energy is linear over the energy range between 3.7 and 5.6 MeV. Integrate the counts recorded in 1020 s (over the channels 240 keV to the left and 120 keV to the right of the energy peak) of the energy spectrum for the ^{242}Pu isotope on the calibration plate. This estimate of counting efficiency is used to calculate a "relative estimate" of the chemical recovery of the ^{234}Th tracer added to each sample. Samples with tracer recovery less than 60% should be reanalyzed as a matter of good laboratory practice.

NOTE: Tracer recovery is a relative term and will be a function of the sample energy resolution compared against the calibration energy plate resolution. The term "percent tracer recovery" is not used to calculate the quantity of the analyte and is recorded only to reflect the relative quality of tracer data.

3.5. Spectra not degraded by excess Fe or other material deposited on the electroplated sample disk should have full-width-at-half-maximum (FWHM) energy resolution of less than 35 keV. Spectra with greater than 50 keV FWHM energy resolution should be reanalyzed as a matter of good practice.

4. Calculation of Sample Concentration for Thorium Content

4.1. Samples are counted for 70,000 s.

4.2. A measurement data sheet from the alpha spectrometer, supplied by the count room, lists the recorded counts by channel location. The Alpha1 computer code used by the Tissue Analysis program integrates alpha spectra over an energy range selected by the analyst rather than a preset number of channels. This allows for variations in individual detector characteristics by integrating over a constant energy range. The energy resolution of the detectors used for counting thorium samples is set at approximately 20.0 keV per channel. For thorium, the code integrates counts 240 keV below and 120 keV above the identified peak channel. This corresponds to approximately 16 channels to the left and 8 channels to the right of the peak. Areas selected by the calibration for thorium integration are as follows:

Isotope	Energy, MeV	Peak channel	Integration channels
^{232}Th	4.0	20	4 to 28
^{234}Th	4.3[a]	41	40 to 42
^{230}Th	4.7	65	49 to 73
^{228}Th	5.4	114	98 to 122

[a]See discussion of tracer recovery below.

These same areas are used to determine detector background activity for each nuclide. The calibration and background measurements are made weekly.

4.3. Thorium-234 tracer recovery factor.

If an appropriate long-lived alpha-emitting isotope of thorium is not available for use as a tracer, ^{234}Th can be used. (Thorium-234 is a beta emitter and should not be used if alternatives are available.) When using ^{234}Th, the electrodeposition plates containing the thorium must be counted for beta activity to determine the chemical recovery of the thorium. The percent recovery for each sample is used to calculate the number of counts to be inserted into the sample alpha spectra to enable the computer code to calculate the adjusted thorium activity for the sample. The tracer counts to be added to the spectra are calculated as follows:

$$T = D \times F \times E \times T \quad ,$$

where T = tracer counts to be added,
D = tracer activity added to sample (dis/min),
F = fraction of thorium recovered (determined by β counting),
E = efficiency of individual alpha detector, and
T = time of sample count (1167 min).

For our calculations, a fictitious alpha energy of 4.265 MeV was assigned to the ^{234}Th and the data entered into the Isotope Library. The data was integrated 15 keV below and 15 keV above this energy to provide an artificial peak with which the Alpha1 program can integrate. The calculated tracer count was inserted into channel 41.

$$R = \frac{C_t - C_b}{T \times D} \quad ,$$

where R = recovery factor for ^{234}Th,
C_t = tracer counts in isotope integrated area,
C_b = background counts in isotope integration area,
T = count length (1167 min), and
D = tracer activity (dis/min).

4.4. Tracer recovery factor relative to detector counting efficiency.

$$C_r = \frac{R}{G} ,$$

where R = recovery factor for ^{234}Th,
G = counting efficiency (will average 0.19 for each detector), and
C_r = chemical recovery (expressed as a fraction).

4.5. The following equation is used to calculate ^{228}Th, ^{230}Th, and ^{232}Th concentrations:

$$D = \frac{(C_s - C_b) \times V_s}{T \times V_a \times R} ,$$

where D = dis/min in the total volume,
C_s = sample counts in isotope integrated area,
C_b = background counts in isotope integrated area,
V_s = sample volume (mL),
V_a = sample aliquot volume (mL),
R = tracer recovery factor, and
T = count length (1167 min).

5. Detection Limits

5.1. The minimum detectable amount (MDA) of thorium alpha activity determined by this procedure is a function of the instrumental background counts in the energy areas of ^{228}Th, ^{230}Th, and ^{232}Th, the percent tracer recovery, and the counting efficiency of the system.

5.2. Calculation of MDA.

$$MDA = \frac{2.71 + (4.65 \times S_b)}{E \times RT \times T} ,$$

where 4.65 = constant necessary to achieve desired protection against Type I and Type II statistical errors at the 0.05 confidence level,

2.71 = constant to allow for error of small-count statistics associated with Poisson distributions, to be used when the total counts are 70 or less,

S_b = the standard deviation of the population of counts obtained from the analysis of chemical reagent blank quality control samples (blanks are processed as samples and are analyzed concurrently with sets of tissue samples).

E = detector counting efficiency (expressed as a fraction),

RT = chemical recovery (expressed as a fraction), and

T = standardized sample counting time (1167 min).

5.3. The MDA for a sample using the above formula would be 0.09 dis/min or 0.002 Bq per sample aliquot. The calculation assumes a mean recovery of the tracer of 60%, a mean background of 5 counts, a 1167-min count length, and a counting efficiency of 19%. Correction for sample volume is not included in the above formula, and this factor must be taken into account when results are expressed per total sample volume. The MDA will increase as the percent recovery decreases.

5.4. If results are to be reported in Bq, divide the dis/min by 60.

6. Interferences

6.1. Samples containing more than 6 dis/min of ^{232}Th show severe attenuation of the emitted alphas due to electrodeposition of a thick layer of thorium on the surface of the planchet. Aliquot size must be selected, therefore, to contain < 6 dis/min ^{232}Th.

7. Proper Waste Disposal Practices

7.1. The stainless-steel sample discs are discarded into the solid radioactive waste container after five years.

7.2. Waste pickup.

7.2.1. See Source Material 8.3 for general Laboratory policy on waste disposal.

7.2.2. Fill out the waste Profile Request Form (PRF) and send it to EM-8 along with all pertinent MSDS sheets. The form will be returned to the group waste management coordinator who will return it to the waste generator.

7.2.3. After the PRF is signed off by EM-8 and with a reference number, fill out the Radioactive Solid Waste Disposal request (RSWD) form. Send this form and the original PRF(s) to EM-7.

7.2.4. After the RSWD is returned, call HS-1 to have the monitor come and monitor and tag the container.

7.2.5. After the container has been tagged by the monitor, call EM-7 to arrange for pickup of the container.

8. Source Material

8.1. L. A. Currie, "Limits for Qualitative Detection and Quantitative Determination," *Anal. Chem.* **40**, 586-593 (1968).

8.2. L. A. Currie, "Lower Limit of Detection: Definition and Elaboration of a Proposed Position for Radiological Effluent and Environmental Measurements," U.S. Nuclear Regulatory Commission report NUREG/CR-4007 (September 1984).

8.3. "Chemical, Hazardous, and Mixed Waste," Administrative Requirement 10-3, in *Environment, Safety, and Health Manual*, Los Alamos National Laboratory Manual, Chapter 1 (most recent edition).

Revisions or additions to the procedure are marked (▒▒▒▒). Where a section heading is marked, the entire section has been revised.

ALPHA SPECTROMETRY MEASUREMENT FOR RADIONUCLIDES OF URANIUM

Procedure: Measurement by alpha spectrometry of alpha activity of electroplated disks	**Method No.:** RT800
Effective Date: 01/01/86	**Authors:** William D. Moss George H. Brooks

SAFETY NOTE: Before beginning this procedure, read Sec. 4.3 of the EM-9 Safety Manual for information on personal protective clothing and equipment. Read Sec. 6 of this procedure for proper waste disposal practices.

1. Principle of Method

1.1. Electroplated samples containing uranium are measured for alpha activity using alpha spectrometry.

1.2. Detection limits for alpha activity are based on instrument background count data collected in energy areas associated with the alpha decay spectrum for each nuclide of interest and recovery of radiotracer added to each sample.

1.3. Multinuclide alpha secondary standards (No. EM-9-16, ^{241}Am, ^{239}Pu, and ^{242}Pu) are used to set the alpha spectrometer energy peak locations and determine the counting efficiency of each of the 16 detectors.

1.4. Quality control records are maintained on each detector's background and counting efficiency and used to determine if the detector is out of control relative to its previously established mean counting efficiency and background profile. See Fig. 1.

1.5. Detection of 0.001 (0.06 dis/min) of ^{238}Pu is achieved with 95% confidence from prepared plates that have better than 60% tracer recovery and a mean background of <2 counts in 70 000 s. Detectors that have background counts >10 counts on two consecutive measurements are considered out of control.

2. Apparatus

2.1. Alpha spectrometer: Canberra Series 35 Plus, 4096-channel analyzer, equipped with sixteen 300-or 450-mm^2 silicon surface barrier detectors.

3. Calibration and Standards for Uranium

3.1. Use multielement electroplated secondary standards containing ^{242}Pu, ^{239}Pu, and ^{241}Am. Average total gross activity of the plates is 2045 dis/min (^{242}Pu = 30.6%, ^{239}Pu = 35.2%, and ^{241}Am = 34.2%).

3.2. Calibrate the spectrometer to record, in 128 channels per detector, alpha activity with decay energies between 3.5 and 6 MeV. Table I lists the counts recorded for the four uranium isotopes of interest in this energy range: ^{232}U, ^{234}U, ^{235}U, and ^{238}U. Included in Table I are the locations of ^{241}Am, ^{239}Pu, and ^{242}Pu peaks that are used to calibrate each detector.

3.3. Set the energy peak locations as follows:

Isotope	Energy, MeV	Peak channel	Integration channels
^{242}Pu	4.9	74	67 to 78
^{239}Pu	5.15	87	80 to 91
^{241}Am	5.5	106	99 to 110

3.4. Response to the detection of alpha particles for each nuclide decay energy is linear over the energy range between 3.5 and 6 MeV. Integrate counts recorded in 1020 s over 11 channels (7 channels to the left of the energy peak and 3 channels to the right of the peak) of the energy spectrum for the ^{242}Pu isotope. This estimate of counting efficiency is used to calculate a "relative estimate" of the chemical recovery of the ^{232}U tracer added to each sample. Samples with tracer recovery less than 60% should be reanalyzed as a matter of good laboratory practice.

NOTE: Tracer recovery is a relative term and will be a function of the sample energy resolution compared against the calibration energy plate resolution. The percent tracer recovery is not used to calculate concentration of the unknown analyte and is recorded only to reflect the relative quality of tracer data.

3.5. Spectra that are not degraded because of excess Fe or other material deposited on the electroplated sample disk will have full-width half-maximum (FWHM) energy resolution of less than 50 keV. Spectra with greater than 50 keV FWHM energy resolution should be reanalyzed as a matter of good practice when the apparent sample counts in the area of ^{238}U and ^{234}U are equivalent to the detector background counts and the ^{232}U tracer recovery is less than 60%.

4. Calculation of Sample Concentration for Uranium Content

4.1. Samples are counted for 70,000 s.

4.2. A measurement data sheet from the alpha spectrometer, supplied by the count room, will list the recorded counts by channel location. Areas selected by the calibration for uranium isotope integration are:

Isotope	Energy, MeV	Peak channel	Integration channels
^{238}U	4.2	38	30 to 41
^{235}U	4.4	48	42 to 53
^{234}U	4.8	67	59 to 70
^{232}U	5.3	96	87 to 98

These same areas are used to determine detector background activity for each nuclide. The calibration and background measurements are made before sample measurement.

4.3. Uranium-232 tracer recovery factor.

$$R = \frac{Ct - Cb}{T \times D} ,$$

where Ct = tracer counts in isotope integrated area,
Cb = background counts in isotope integrated area,
T = count length (1167 min),
D = tracer activity (dis/min), and
R = recovery factor for ^{232}U.

4.4. Tracer recovery factor relative to detector counting efficiency.

$$RT = \frac{R}{G} ,$$

where R = recovery factor for ^{232}U,
G = counting efficiency (will average 0.17 for each detector), and
RT = chemical recovery (expressed as a fraction).

4.5. The following equation is used to calculate ^{234}U, ^{235}U, and ^{238}U concentrations:

$$\text{dis/min/sample volume} = \frac{(Cs - Cb) \times Vs}{T \times Va \times R},$$

where Cs = sample counts in isotope integrated area,
Cb = background counts in isotope integrated area,
Vs = sample volume (mL),
Va = sample aliquot volume (mL),
R = tracer recovery factor, and
T = count length (1167 min).

5. Detection Limits

5.1. The minimum detectable amount (MDA) of uranium alpha activity determined by this procedure is a function of the instrument background counts in the energy areas of the ^{234}U, ^{235}U, and ^{238}U, the percent tracer recovery, and the counting efficiency of the system.

5.2. Calculation of MDA.

$$MDA = \frac{(4.65 \times S_b + 3)}{E \times RT \times T},$$

where 4.65 = constant necessary to achieve desired protection against Type I and Type II statistical errors at the 0.05 confidence level,
3 = constant to allow for error of small-count statistics associated with Poisson distributions,
S_b = the standard deviation of the population of counts obtained from the analysis of chemical reagent blank quality control samples (see note below),
E = detector counting efficiency (expressed as a fraction),
RT = chemical recovery (expressed as a fraction), and
T = standardized sample counting time (1167 min).

NOTE: Blanks are processed as samples and are analyzed concurrently with sets of tissue samples. The blank counts for the uranium samples average 1 count per 70 000 s, and the estimated value of S_b would equal the square root of 1 or 1.

5.3. The MDA for a sample using this formula would be 0.06 dis/min or 0.001 per sample aliquot. The calculation assumes a mean recovery of the tracer of 60%, a mean background of 1 count, a 1167-min count length, and a counting efficiency of 17%. MDAs are calculated for each reported sample. Correction

for sample volume is not included in the above formula, and this factor must be taken into account when results are expressed per total sample volume.

5.4. Measurement of the concentration of ^{235}U in a sample will be less certain than measurement of other uranium isotopes because of the tailing of the ^{234}U counts into the spectrum area of ^{235}U. If the concentration of ^{235}U is required, additional evaluation of the spectrum may be required to subtract the contribution of the ^{234}U tailing into the spectrum area corresponding to the ^{235}U activity. Additional measurements using longer counting periods and lower counting efficiency may also be used to achieve resolution of ^{235}U counts.

5.5. If results are to be reported in Bq, divide the dis/min by 60.

6. Proper Waste Disposal Practices

6.1. This procedure does not generate any waste.

7. Source Materials

7.1. L. A. Currie, "Limits for Qualitative Detection and Quantitative Determination," *Anal. Chem.* **40**, 586-593 (1968).

7.2. L. A. Currie, "Lower Limit of Detection: Definition and Elaboration of a Proposed Position for Radiological Effluent and Environmental Measurements," U.S. Nuclear Regulatory Commission report NUREG/CR-4007 (September 1984).

Revisions or additions to the procedure are marked (▒). Where a section heading is marked, the entire section has been revised.

TABLE I. ENERGY SPECTRUM FOR ALPHA SPECTROMETER

Channel	Counts		Channel	Counts		Channel	Counts	
31	0 *		61	0 *		91	2	
32	0		62	0		92	18	
33	0		63	0		93	76	
34	6		64	5		94	101	
35	3		65	7		95	123	
36	2		66	7		96	262	—Peak^{232}U
37	4		67	19		97	234	(5.3 MeV)
38	13	—Peak^{238}U	68	20	—Peak^{234}Pu	98	28	
39	2	(4.2 MeV)	69	0	(4.8 MeV)	99	0 *	
40	0		70	0		100		
41	0 *		71	0 *		101		
42	0		72			102		
43	1		73			103		
44	2		74		—Calibration	104		
45	3		75		Peak^{242}Pu	105		
46	4		76		(4.9 MeV)	106		—Calibration
47	9		77			107		Peak^{241}Am
48	10	—Peak^{235}U	78			108		(5.5 MeV)
49	5	(4.4 MeV)	79			109		
50	1		80			110		
51	0		81			111		
52	0 *		82			112		
53			83			113		
54			84			114		
55			85			115		
56			86		—Peak^{238}Pu	116		
57			87		(5.1 MeV)	117		
58			88			118		
59			89	1 *		119		
60			90	3		120		

***Counts integrated over 11 channels, 7 to the left and 3 to the right of the energy peak.**

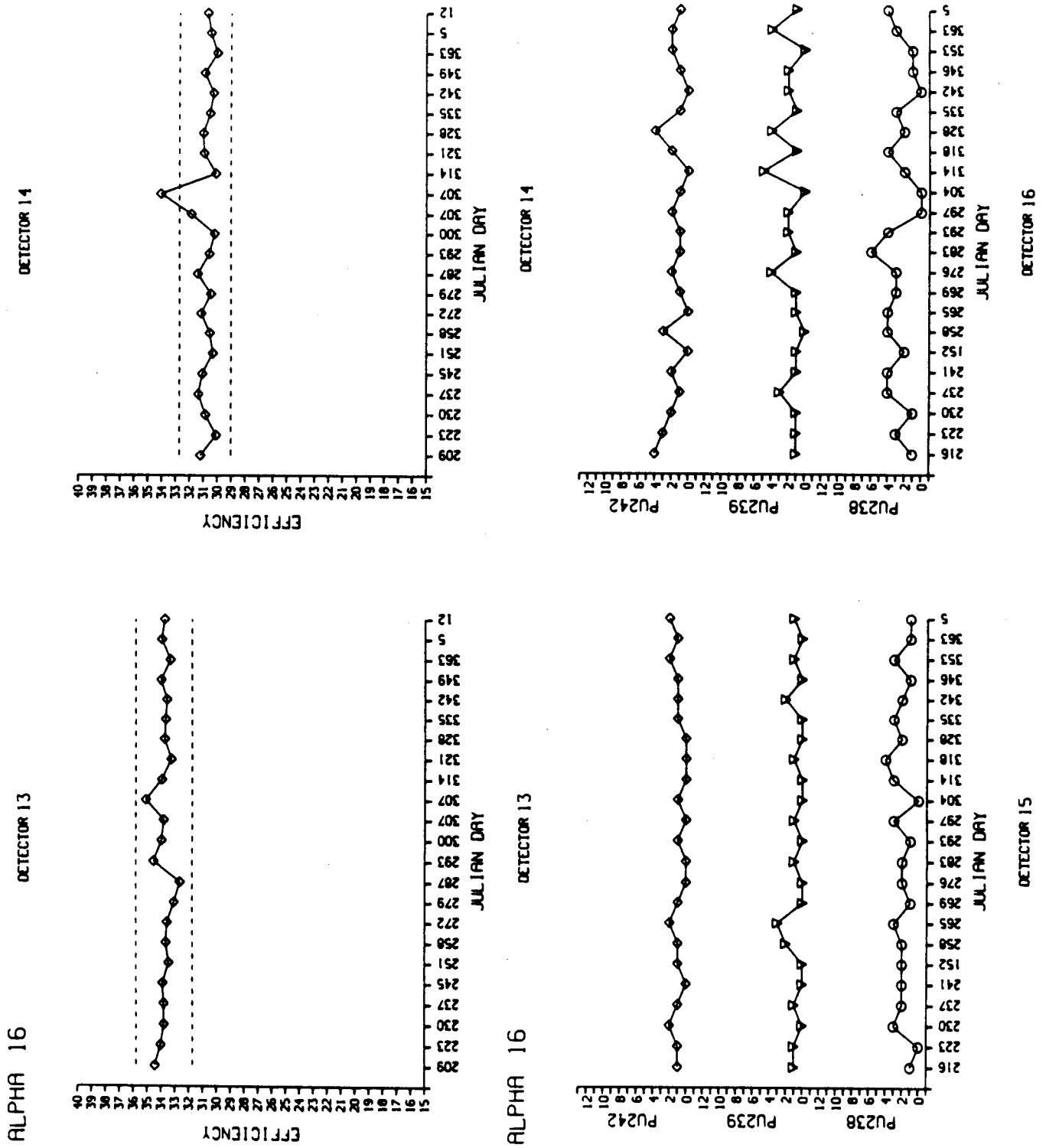

Fig. 1. Calibration and background plots.

MEASUREMENT OF ACTINIUM IN TISSUE SAMPLES — GAMMA SPECTROSCOPY

Analyte: Dissolved tissue samples are gamma counted	**Method No.:** RT900
Effective Date: 07/11/90	**Author:** George H. Brooks

SAFETY NOTE: Before beginning this procedure, read all of the Material Safety Data Sheets for the chemicals listed in Section 6. Read Section 4.3 of the EM-9 Safety Manual for information on personal protective clothing and equipment.

1. Principle of Method

1.1. Dissolved tissue samples containing isotopes of actinium are measured for gamma activity using gamma spectroscopy.

1.2. Detection limits for gamma activity are determined by using appropriate blank count data (independent of sample matrix type). This data is integrated within the specific energy areas associated with the gamma spectrum for the actinium nuclides of interest within each sample.

1.3. A tri-energetic source (NBS Mixed Radioactivity Point Source, SRM-4216, #33, using Cs-137 and Co-60 at 661.6, 1173.2 and 1132.5 keV) is used to set the energy calibration of the gamma counting system.

1.4. A set of NIST SRM-4339 #11 ^{228}Ra standards (or similar NIST Standard Solution) in 8.0 N HNO_3 carrier is used to determine the peak centroid, range of integration, and counting efficiency of the detector. The set consists of five 500-mL Nalgene bottles with the same amount of standard and a varying volume of liquid in each bottle.

1.5. Quality-control records are maintained on the detector's background and on in-house quality-control samples. These records are used to monitor the detector performance and determine if the detector is out of control relative to previously established limits for background and QC samples (see Figs. 1 and 2).

1.6 A limit of detection (L_d) for ^{228}Ac of 70 dis/min per sample (1.17 Bq) has been achieved at the 95% confidence level using a 500-mL sample and a 7200-s counting period (independent of sample matrix type).

2. Detection Limits

2.1 The limit of detection (L_d) for ^{228}Ac is a function of the instrument background counts within the integrated region of interest (ROI) of the ^{228}Ac peaks, the counting efficiency of the system, and the counting time for the samples.

2.2. The following equation is used to calculate the limit of detection (L_d):

$$L_d = \frac{2.71 + 4.65\sqrt{C_b}}{T \times E_v} ,$$

where L_d = limit of detection,
2.71 = constant to allow for error of small-count statistics associated with Poisson distributions,
4.65 = constant to protect against Type I and Type II statistical errors at the 0.05 confidence level,
C_b = background counts obtained from the analysis of chemical reagent blank quality-control samples,
T = count length (120 or 833.3 min), and
E_v = volume-based efficiency.

2.3. The L_d for a blank sample with a 7200-s count time is 70 dis/min per sample (1.17 Bq). This calculation assumes an average background of 21,200 counts, a 120-min count length, and a counting efficiency of 8.01% using a 500-mL sample volume. (The exact limit of detection will vary according to the background rate at the time of sample count). The L_d will change as a function of the volume of the sample; it decreases as the sample volume decreases.

3. Accuracy and Precision

3.1. Quality-control samples (blind and non-blind) of "tissue equivalent" 8.0 N HNO_3 NIST SRM-4339 ^{228}Ra solutions are run with every set of samples.

3.2. The following table is a summary of the mean recoveries of the QC samples that were run during 1990 and 1991.

Sample No.	Mean ± std dev (%)	(n)
#1	108.0 ± 13.0	2
#2	101.0 ± 10.0	3
#3	103.0 ± 11.0	3
#4	100.0 ± 8.0	5
#5	97.0 ± 9.0	4
#6	104.0 ± 7.0	3

4. Interferences

4.1. Any gamma emitter that decays with an energy between 800-1050 keV can interfere.

5. Apparatus

5.1. Bicron NaI(Tl) well counter with an efficiency of 48.6% at 661.6 keV, with a PHR of 7.5%. This is coupled to a Canberra Series 35 Plus 4096-channel pulse height analyzer through an external analog-to-digital converter and amplifier.

6. Calibration and Standards for Actinium

6.1. Use an NIST (NBS) SRM-4216 #33 point source containing ^{137}Cs and ^{60}Co isotopes as the energy calibration source.

6.2. Calibrate the detector to respond to the peak energies (centroids) at the following specified channels:

Isotope	Energy, keV	Peak channel
^{137}Cs	661.6	662
^{60}Co	1173.2	1173
^{60}Co	1332.5	1332

6.3. Use the 500-mL NIST SRM-4339 radium-228 solution standard as the source of signal to determine correct regions of integration. Collect approximately 5000 counts (to provide adequate counting statistics) within the peak centroid response (channel 910). Set the ROIs on the lower and upper limits of the peak, where the slope is approximately zero. These integration limits will encompass the 911.1 keV line (27.7% abundance), along with the second most abundant peak at 968.9 keV (16.6% abundance). Activate the integration function on the multichannel analyzer by depressing the "integrate" key. Read the integrated counts in the lower left-hand region of the display.

6.4. Use the NIST SRM-4339 ^{228}Ra standard in 7.2 N HNO_3 (5 samples with volumes varying from 100 to 500 mL) and count each standard for 7200 s. Record the integrated counts within the specified ROI.

6.5. Calculate the absolute efficiency for each volume from the known amount of standard added to the various volumes. Graph the efficiency as a function of sample volume (Fig. 3). Determine the equation of line that best fits this response ($y = a + bx$), i.e., the equation of line that produces the highest correlation coefficient ($r = 1.0$ is a perfect fit). This will allow the interpolation of an efficiency for any volume between the calculated ranges.

6.6. NaI(Tl) systems characteristically have relatively poor resolution compared to HPGE systems, but the quality of the spectra can still be a measure of the quality of the signal. If the full width at half maximum (FWHM) is greater than approximately 100 keV, because of the complexity of the combination of the singlet and doublet, the sample should be recounted as a matter of good spectroscopic technique. Another indicator of problems is spectrum shift. If the peak centroid is not evenly distributed within the ROIs, shift has occurred and will result in erroneous calculated data. If this occurs, recalibrate the system with the mixed $^{137}Cs/^{60}Co$ point source.

7. Calculation of Sample Activity for Actinium-228 Content

7.1. Routine samples are counted for 7200 s. Samples analyzed over the weekend are counted for 50,000 seconds.

7.2. A sample-counting log sheet accompanies the NaI(Tl) counting system. Record all pertinent sample information (sample identification, volume or weight of the sample, date counted, the integrated counts, and comments) on the log sheet. The data is used in the calculation of the final results.

7.3. Use the following equation to calculate ^{228}Ac activity:

$$A = \frac{(C_s - C_b)}{T \times E_v} ,$$

where A = ^{228}Ac activity (dis/min per sample),
C_s = sample counts within the integrated region,
C_b = background counts within the integrated region,
T = count length (120 or 833.3 min), and
E_v = efficiency based on volume of sample.

7.4. The following equation is used to calculate the 3-sigma standard deviation associated with the result:

$$SD = 3 \times \sqrt{A} \quad ,$$

where SD = standard deviation of sample activity and
A = sample activity (dis/min per sample).

8. Proper Waste Disposal Practices

8.1. No waste is produced using this procedure.

9. Source Materials

9.1. L. A. Currie, "Limits for Qualitative Detection and Quantitative Determination," *Anal. Chem.* **40**, 586-593 (1968).

9.2. W. W. Bowman and K. W. MacMurdo, "Radioactive-Decay Gammas," *Atomic Data and Nuclear Data Tables* **13**, 89-292 (1974).

9.3. A. S. Goldin, P. J. Magno, and F. Geiger, "Radionuclides in Autopsy Samples from Thorotrast Patients," *Health Physics* **22**, 471-482 (1972).

9.4. R. A. Dudley, "Bone Irradiation in Thorotrast Cases: Results of Measurements at IAEA," *Health Physics* **35**, 103-112 (1978).

9.5. H. F. Lucas, Jr., N. S. MacDonald, and J. Sweeney, "Thorium Daughters in the Spleen of a Thorotrast Case," *Health Physics* **23**, 575-576 (1972).

Revisions or additions to the procedure are marked (▒). Where a section heading is marked, the entire section has been revised.

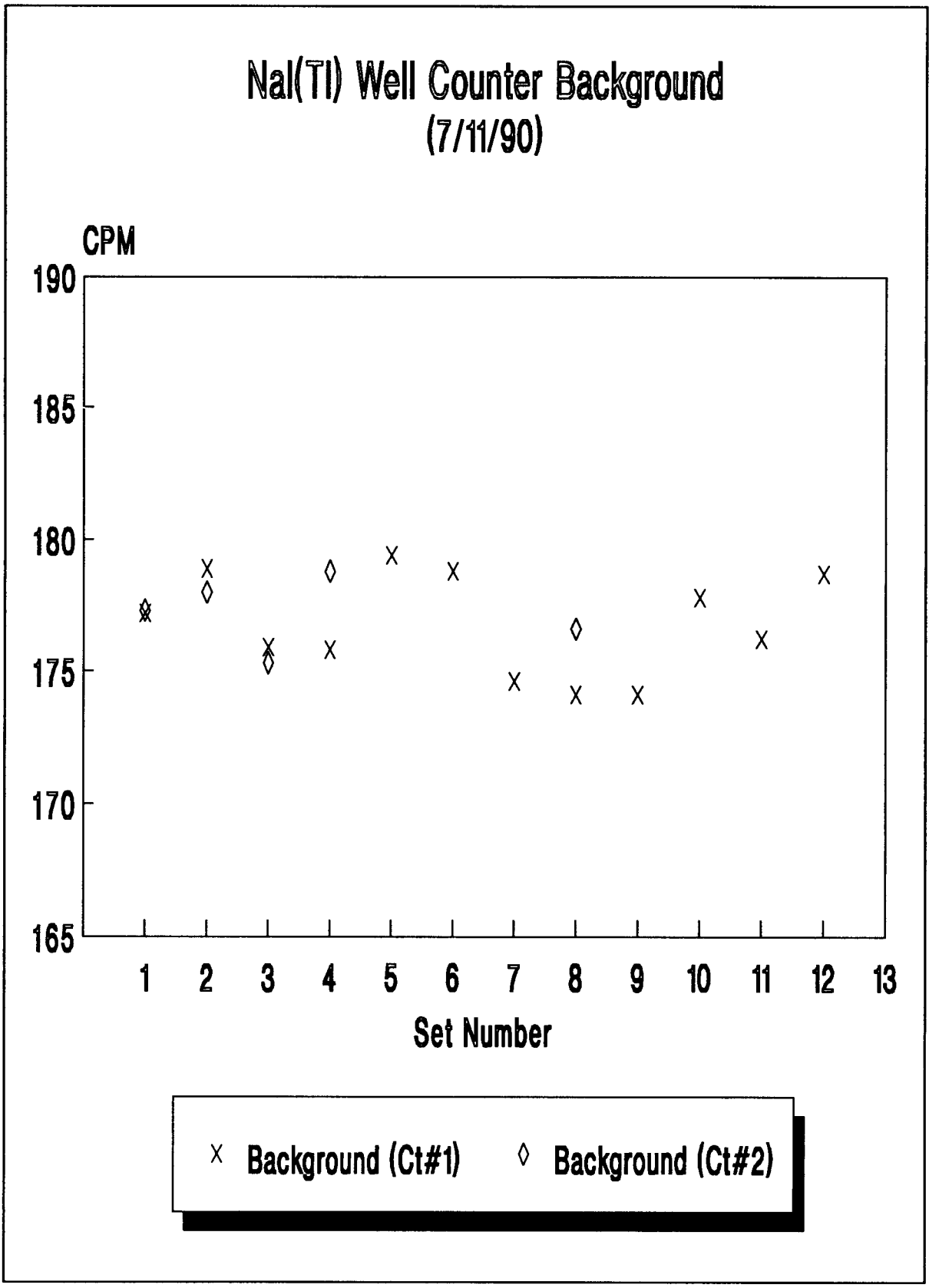

Fig. 1. Detector background.

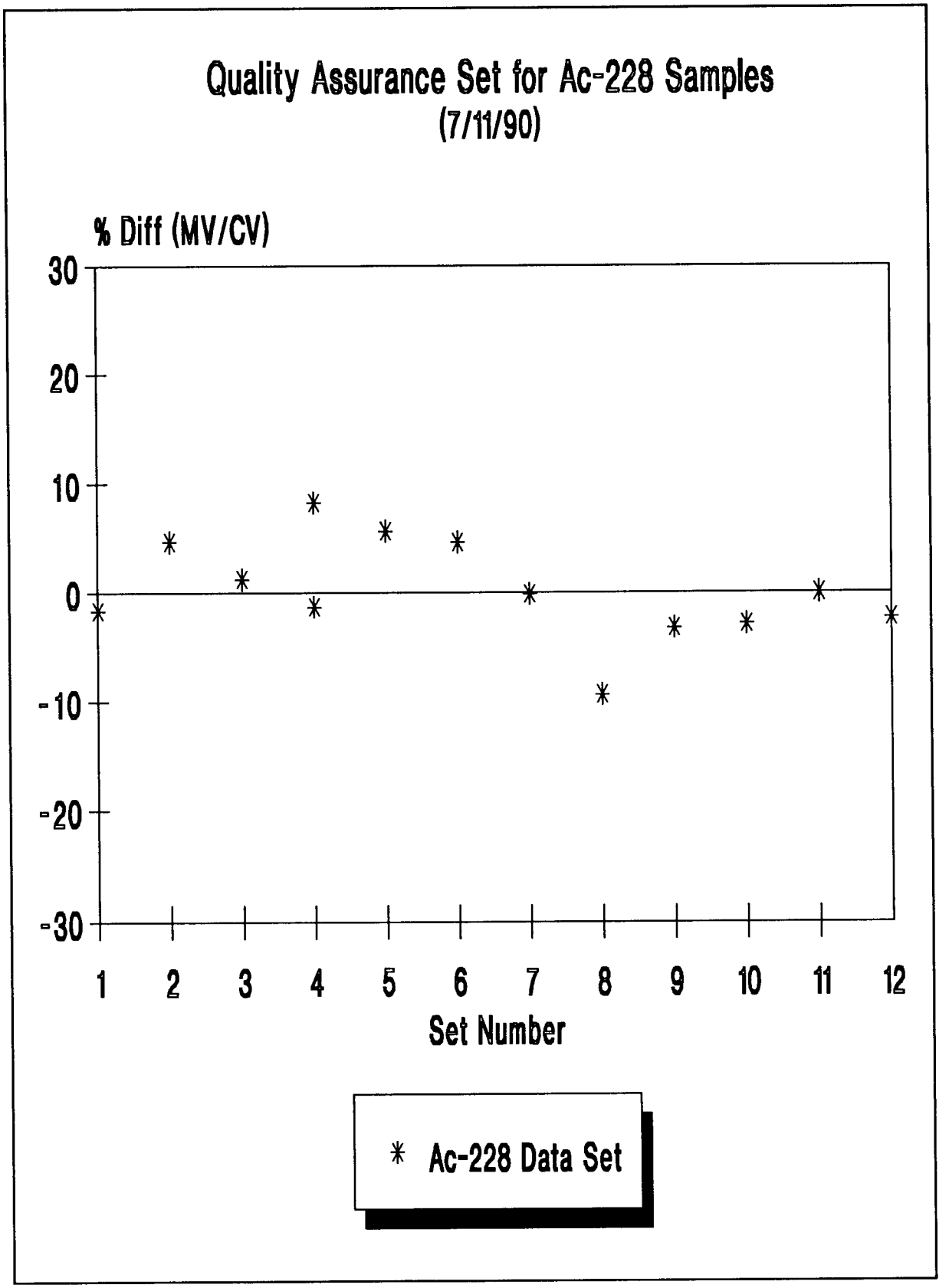

Fig. 2. In-house quality control samples.

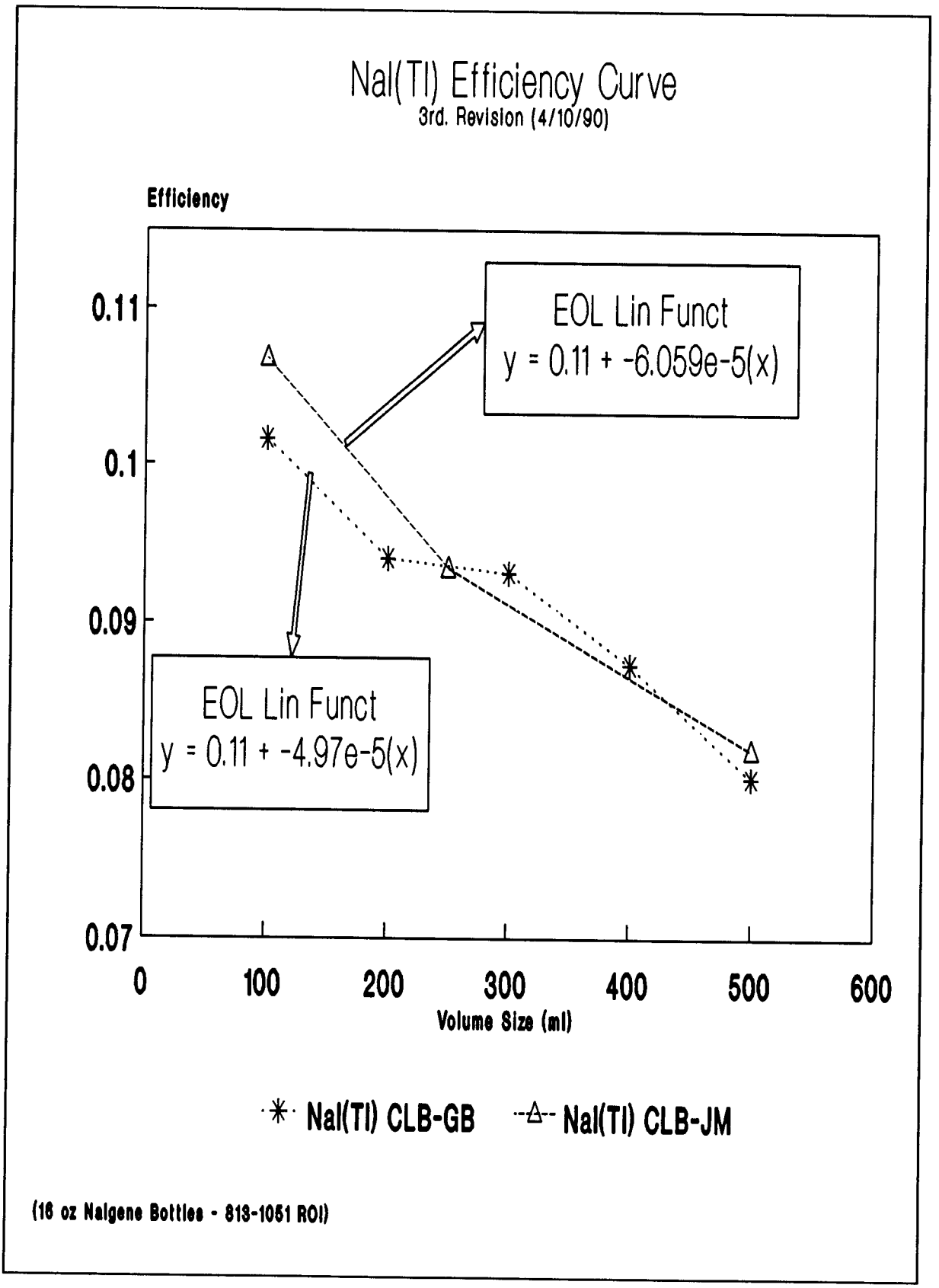

Fig. 3. Efficiency as a function of sample volume.

APPENDIX

ALPHA 1 Computer Code

```
      PROGRAM MAIN(INPUT,OUTPUT,TAPE9,TAPE3,
     C    TAPE8,TAPE11=INPUT)
C
C-----------------------------------------------------------------------
C
C     COPYRIGHT, 1986, THE REGENTS OF THE UNIVERSITY OF CALIFORNIA.
C     THIS SOFTWARE WAS PRODUCED UNDER A U.S. GOVERNMENT CONTRACT
C     (W-7405-ENG-36) BY THE LOS ALAMOS NATIONAL LABORATORY, WHICH
C     IS OPERATED BY THE UNIVERSITY OF CALIFORNIA FOR THE U.S. DEPARTMENT
C     OF ENERGY.  THE U.S. GOVERNMENT IS LICENSED TO USE, REPRODUCE, AND
C     DISTRIBUTE THIS SOFTWARE. PERMISSION IS GRANTED TO THE PUBLIC TO
C     COPY AND USE THIS SOFTWARE WITHOUT CHARGE, PROVIDED THAT THIS NOTICE
C     AND ANY STATEMENT OF AUTHORSHIP ARE REPRODUCED ON ALL COPIES.
C     NEITHER THE GOVERNMENT NOR THE UNIVERSITY MAKES ANY WARRANTY, EXPRESS
C     OR IMPLIED, OR ASSUMES ANY LIABILITY OR RESPONSIBILITY FOR THE USE OF
C     THIS SOFTWARE.
C
C-----------------------------------------------------------------------
C
C   FILE DEFINITIONS
C
C   TAPE9 - ISOTOPE LIBRARY
C   TAPE3 - SYSTEM LIBRARY
C   TAPE4 - BACKGROUND LIBRARY
C   TAPE6 - CALIBRATION LIBRARY
C   TAPE8 - OUTPUT FILE (ROUTE TO PRINTER)
C   TAPE90-94 - OUTPUT FILES (ADD TO FILE TO2K)
C               EACH FILE CONTAINS DATA FOR 1 TYPE OF ISOTOPE
C
      CHARACTER*10 CLOCK,DATE,ICLOCK,IDATE
C
      IDATE=DATE()
      ICLOCK=CLOCK()
C
      PRINT 1003, IDATE, ICLOCK
 1003 FORMAT(/,' WELCOME TO ALPHA ',2X,A10,1X,A10)
C
  100 PRINT 1000
 1000 FORMAT(/' THE FOLLOWING USER FUNCTIONS ARE AVAILABLE:'/
     C 6X,'"I" TO UPDATE THE ISOTOPE LIBRARY'/
     C 6X,'"D" TO UPDATE THE DETECTOR SYSTEM LIBRARY'/
     C 6X,'"B" TO UPDATE THE BACKGROUND DATA FILE'/
     C 6X,'"C" TO UPDATE CALIBRATION FILE AND DO CALCULATIONS'/
     C 6X,'"S" TO PERFORM SAMPLE DATA CALCULATIONS'/
     C 6X,'"E" TO END')
      READ (11,1001,END=500) IFUNC
 1001 FORMAT(A3)
      IF(IFUNC.EQ.1HI) CALL UISOLB(*100)
      IF(IFUNC.EQ.1HD) CALL USYSLB(*100)
      IF(IFUNC.EQ.1HB) CALL UBKGLB(*100)
      IF(IFUNC.EQ.1HC) CALL UCLBLB(*100)
      IF(IFUNC.EQ.1HS) CALL SAMPLE(*100)
      IF(IFUNC.EQ.1HE) GOTO 200
      PRINT 1002,IFUNC
 1002 FORMAT(1X,A3,'  IS NOT A VALID FUNCTION.')
      GOTO 100
C
  500 IF(EOF(11).NE.0) GOTO 100
  200 STOP
      END
      SUBROUTINE UISOLB(*)
C
C   THIS SUBROUTINE PROCESSES OPTIONS FOR UPDATING THE
C        ISOTOPE LIBRARY
C
      COMMON /C1/ ISOIND(201),IUNIT,EISO(10,200),ELIM(2,200)
      COMMON /C2/ INDSYS(20),ISUNIT,NDET(2,20),EBASE(16,10,20)
      COMMON /C3/ ERES(16,10,20),CLEFF(16,20),AVEFF(16,20),NDATE(10,20)
      COMMON /C4/ INDEX(502),INDBKG(1001),NAMSYS,NSYS,IDATE,TBAK
      COMMON /C5/ INDEXC(502),INDCLB(1001),NUMISO
      PRINT 1000
 1000 FORMAT(' FUNCTION - UPDATE ISOTOPE LIBRARY')
      IUNIT=9
      REWIND IUNIT
      READ(IUNIT,END=300) ISOIND,EISO,ELIM
  100 PRINT 1001
 1001 FORMAT(/' TYPE "A" FOR ADD OR REPLACE'/6X,'"D" FOR DELETE'/
     C    6X,'"L" FOR LIST'/6X,'"E" FOR END')
      READ (11,1002,END=500) IOPT
 1002 FORMAT(A3)
```

```
      IF(IOPT.EQ.1HE) GOTO 200
      IF(IOPT.EQ.1HA) CALL AISOLB(*100)
      IF(IOPT.EQ.1HD) CALL DISOLB(*100)
      IF(IOPT.EQ.1HL) CALL LISOLB(*100)
      IF(IOPT.EQ.3HINT) CALL IISOLB(*100)
      PRINT 1003,IOPT
 1003 FORMAT(//A3,' IS AN INVALID OPTION. TRY AGAIN.')
      GOTO 100
C
  500 IF (EOF(11).NE.0) GOTO 100
C
  300 CALL IISOLB(*100)
C
  200 REWIND IUNIT
      WRITE(IUNIT) ISOIND,EISO,ELIM
      ENDFILE IUNIT
      RETURN 1
      END
      SUBROUTINE AISOLB(*)
C
C   ENTRY POINT - ADD/REPLACE ENTRY IN ISOTOPE LIBRARY
C
      COMMON /C1/ ISOIND(201),IUNIT,EISO(10,200),ELIM(2,200)
      COMMON /C2/ INDSYS(20),ISUNIT,NDET(2,20),EBASE(16,10,20)
      COMMON /C3/ ERES(16,10,20),CLEFF(16,20),AVEFF(16,20),NDATE(10,20)
      COMMON /C4/ INDEX(502),INDBKG(1001),NAMSYS,NSYS,IDATE,TBAK
      COMMON /C5/ INDEXC(502),INDCLB(1001),NUMISO
      IUNIT=9
      PRINT 1000
 1000 FORMAT('    ADDING ISOTOPES TO LIBRARY')
   50 PRINT 1001
 1001 FORMAT('    TYPE ISOTOPE NAME OR "END"')
      READ (11,1002,END=700) ISO
 1002 FORMAT(A5)
      IF(ISO.EQ.3HEND) RETURN 1
      NN=ISOIND(1)+1
      DO 70 I=2,NN
      NISO=I
      IF(ISO.EQ.ISOIND(I))GOTO 80
   70 CONTINUE
      NISO=NN+1
      ISOIND(1)=NN
   80 PRINT 1003
 1003 FORMAT('     TYPE IN PRIMARY PEAK ENERGY(MEV)')
      ISOIND(NISO)=ISO
      READ (11,1004,END=702) EISO(1,NISO)
      DO 100 I=2,10
  101 PRINT 1005
 1005 FORMAT('     TYPE IN SECONDARY PEAK (MEV) OR "0." TO END')
      READ (11,1004,END=701) EISO(I,NISO)
 1004 FORMAT(F10.0)
      IF(EISO(I,NISO).EQ.0.) GOTO 200
  100 CONTINUE
  200 PRINT 1013
 1013 FORMAT(5X,'TYPE IN LEFT INTEGRATION LIMIT (KEVS FROM PRI PEAK)')
      READ (11,1015,END=703) ELIM(1,NISO)
 1015 FORMAT(3PF6.0)
  102 PRINT 1014
 1014 FORMAT(5X,'TYPE IN RIGHT INTEGRATION LIMIT (KEVS FROM PRI PEAK)'
     C )
      READ (11,1015,END=704) ELIM(2,NISO)
      GOTO 50
C
  700 IF(EOF(11).NE.0) GOTO 50
  701 IF(EOF(11).NE.0) GOTO 101
  702 IF(EOF(11).NE.0) GOTO 80
  703 IF(EOF(11).NE.0) GOTO 200
  704 IF(EOF(11).NE.0) GOTO 102
  705 IF(EOF(11).NE.0) GOTO 300
C
C   ENTRY POINT - DELETE ENTRY FROM ISOTOPE LIBRARY
C
      ENTRY DISOLB(*)
      PRINT 1007
 1007 FORMAT(4X,'DELETING ISOTOPES FROM LIBRARY')
  300 PRINT 1001
      READ (11,1002,END=705) ISO
      IF(ISO.EQ.3HEND)·RETURN 1
      NN=ISOIND(1)+1
      DO 370 I=2,NN
```

```
      NISO=I
      IF(ISO.EQ.ISOIND(I))GOTO 380
  370 CONTINUE
      PRINT 1006,ISO
 1006 FORMAT(1X,A10,' NOT FOUND IN ISOTOPE LIBRARY')
      GOTO 300
  380 ISOIND(NISO)=ISOIND(NN)
      ISOIND(1)=ISOIND(1)-1
      DO 400 I=1,10
  400 EISO(I,NISO)=EISO(I,NN)
      DO 450 I=1,2
  450 ELIM(I,NISO)=ELIM(I,NN)
      GOTO 300
C
C   ENTRY POINT - LIST ISOTOPE LIBRARY
C
      ENTRY LISOLB(*)
      PRINT 1008
 1008 FORMAT(10X,'LISTING ISOTOPE LIBRARY')
      NN=ISOIND(1)+1
      PRINT 1009,ISOIND(1)
      IF(ISOIND(1).EQ.0) RETURN 1
 1009 FORMAT(10X,I5,' ENTRIES IN LIBRARY')
      PRINT 1010
 1010 FORMAT(//' ISOTOPE',20X,'PRIMARY/SECONDARY PEAK ENERGIES (MEV)')
      DO 500 I=2,NN
      PRINT 1011,ISOIND(I),(EISO(N,I),N=1,10)
 1011 FORMAT(1X,A5,1X,10F7.3)
      PRINT 1012,ELIM(1,I),ELIM(2,I)
 1012 FORMAT(20X,'INTEGRATION LIMITS ',3PF6.2,' - ',3PF6.2,' KEVS')
  500 CONTINUE
      RETURN 1
C
C   ENTRY POINT - INITIALZE ISOTOPE LIBRARY
C
      ENTRY IISOLB(*)
      PRINT 1016
 1016 FORMAT('INITIALIZING ISOTOPE LIBRARY')
      ISOIND(1)=0
      DO 600 I=1,200
      ELIM(1,I)=ELIM(2,I)=0.
  600 ISOIND(I+1)=0
      DO 610 I=1,200
       DO 610 J=1,10
  610 EISO(J,I)=0.
      REWIND IUNIT
      WRITE(IUNIT) ISOIND,EISO,ELIM
      ENDFILE IUNIT
      RETURN 1
      END
      SUBROUTINE USYSLB(*)
C
C   THIS SUBROUTINE PROCESSES OPTIONS FOR UPDATING THE
C       DETECTOR SYSTEM LIBRARY
C
      COMMON /C1/ ISOIND(201),IUNIT,EISO(10,200),ELIM(2,200)
      COMMON /C2/ INDSYS(20),ISUNIT,NDET(2,20),EBASE(16,10,20)
      COMMON /C3/ ERES(16,10,20),CLEFF(16,20),AVEFF(16,20),NDATE(10,20)
      COMMON /C4/ INDEX(502),INDBKG(1001),NAMSYS,NSYS,IDATE,TBAK
      COMMON /C5/ INDEXC(502),INDCLB(1001),NUMISO
      PRINT 1000
 1000 FORMAT(' FUNCTION - UPDATE SYSTEM LIBRARY')
C     IUNIT=9
C     REWIND IUNIT
C     READ(IUNIT,END=120) ISOIND,EISC,ELIM
      ISUNIT=3
      REWIND ISUNIT
      READ(ISUNIT,END=110) INDSYS,NDET,EBASE,ERES,CLEFF,AVEFF,NDATE
  100 PRINT 1001
 1001 FORMAT(/' TYPE "A" FOR ADD OR REPLACE'/6X,'"D" FOR DELETE'/
     C    6X,'"L" FOR LIST'/6X,'"E" FOR END')
      READ (11,1002,END=500) IOPT
 1002 FORMAT(A3)
      IF(IOPT.EQ.1HE) GOTO 200
      IF(IOPT.EQ.1HA) CALL ASYSLB(*100)
      IF(IOPT.EQ.1HD) CALL DSYSLB(*100)
      IF(IOPT.EQ.1HL) CALL LSYSLB(*100)
      IF(IOPT.EQ.3HINT) CALL ISYSLB(*100)
      PRINT 1003,IOPT
 1003 FORMAT(//A3,' IS AN INVALID OPTION. TRY AGAIN.')
```

```
      GOTO 100
C
  500 IF(EOF(11).NE.0) GOTO 100
C
  110 CALL ISYSLB(*100)
C
  200 REWIND ISUNIT
      WRITE(ISUNIT) INDSYS,NDET,EBASE,ERES,CLEFF,AVEFF,NDATE
      ENDFILE ISUNIT
      RETURN 1
      END
      SUBROUTINE ASYSLB(*)
C
C   ENTRY POINT - ADD/REPLACE ENTRY IN SYSTEM LIBRARY
C
      COMMON /C1/ ISOIND(201),IUNIT,EISO(10,200),ELIM(2,200)
      COMMON /C2/ INDSYS(20),ISUNIT,NDET(2,20),EBASE(16,10,20)
      COMMON /C3/ ERES(16,10,20),CLEFF(16,20),AVEFF(16,20),NDATE(10,20)
      COMMON /C4/ INDEX(502),INDBKG(1001),NAMSYS,NSYS,IDATE,TBAK
      COMMON /C5/ INDEXC(502),INDCLB(1001),NUMISO
      PRINT 1000
 1000 FORMAT('       ADDING A DETECTOR SYSTEM TO THE LIBRARY')
   50 PRINT 1001
 1001 FORMAT('       TYPE SYSTEM NAME OR "END"')
      READ (11,1002,END=700) NAMSYS
 1002 FORMAT(A8)
      IF(NAMSYS.EQ.3HEND) RETURN 1
      NN=INDSYS(1)+1
      DO 70 I=2,NN
      NSYS=I
      IF(NAMSYS.EQ.INDSYS(I)) GOTO 80
   70 CONTINUE
      NSYS=NN+1
      INDSYS(1)=NN
   80 PRINT 1003
 1003 FORMAT('       TYPE IN NUMBER OF DETECTORS IN SYSTEM (MAX=16)')
      INDSYS(NSYS)=NAMSYS
      READ (11,1004,END=701) NDET(1,NSYS)
 1004 FORMAT(I4)
      IF(NDET(1,NSYS).LE.16) GOTO 100
      PRINT 1005,NDET(1,NSYS)
 1005 FORMAT(I5,' IS MORE THAN MAX ALLOWED.')
      GOTO 80
  100 PRINT 1006
 1006 FORMAT('       TYPE IN NUMBER OF CHANNELS PER DETECTOR (MAX=1024)')
      READ (11,1007,END=702) NDET(2,NSYS)
 1007 FORMAT(I4)
      IF(NDET(2,NSYS).LE.1024) GOTO 200
      PRINT 1005,NDET(2,NSYS)
      GOTO 100
  200 PRINT 1030
 1030 FORMAT('       TYPE IN CHANNEL 0 ENERGY (MEV)')
      READ (11,1031,END=703) ENO
 1031 FORMAT(F7.0)
  201 PRINT 1032
 1032 FORMAT('       TYPE IN CHANNEL RESOLUTION (KEV/CHANNEL)')
      READ (11,1033,END=704) ERBASE
 1033 FORMAT(3PF7.0)
      IDET=NDET(1,NSYS)
      NDATE(1,NSYS)=1
      DO 260 I=1,IDET
      EBASE(I,1,NSYS)=ENO
      ERES(I,1,NSYS)=ERBASE
      AVEFF(I,NSYS)=0.
  260 CLEFF(I,NSYS)=0.
      DO 270 I=2,10
  270 NDATE(I,NSYS)=0
  280 PRINT 1009,NAMSYS
 1009 FORMAT(1X,A8,' HAS BEEN ADDED TO THE LIBRARY')
      GOTO 50
C
  700 IF(EOF(11).NE.0) GOTO 50
  701 IF(EOF(11).NE.0) GOTO 80
  702 IF(EOF(11).NE.0) GOTO 100
  703 IF(EOF(11).NE.0) GOTO 200
  704 IF(EOF(11).NE.0) GOTO 201
  705 IF(EOF(11).NE.0) GOTO 300
C
C   ENTRY POINT - DELETE ENTRY FROM SYSTEM LIBRARY
C
```

```
      ENTRY DSYSLB(*)
      PRINT 1010
 1010 FORMAT('       DELETE A DETECTOR SYSTEM FROM THE LIBRARY')
  300 PRINT 1001
      READ (11,1002,END=705) NAMSYS
      IF(NAMSYS.EQ.3HEND) RETURN 1
      NN=INDSYS(1)+1
      DO 370 I=2,NN
      NSYS=I
      IF(NAMSYS.EQ.INDSYS(I)) GOTO 380
  370 CONTINUE
      PRINT 1012,NAMSYS
 1012 FORMAT(1X,A8,' NOT FOUND IN SYSTEM LIBRARY')
      GOTO 300
  380 INDSYS(NSYS)=INDSYS(NN)
      INDSYS(1)=INDSYS(1)-1
      DO 400 I=1,2
  400 NDET(I,NSYS)=NDET(I,NN)
      DO 410 I=1,16
      CLEFF(I,NSYS)=CLEFF(I,NN)
      AVEFF(I,NSYS)=AVEFF(I,NN)
      DO 410 J=1,10
      EBASE(I,J,NSYS)=EBASE(I,J,NN)
  410 ERES(I,J,NSYS)=ERES(I,J,NN)
      PRINT 1019,NAMSYS
 1019 FORMAT(1X,A8,' HAS BEEN DELETED FROM THE SYSTEM')
      GOTO 300
C
C   ENTRY POINT - INITIALIZE SYSTEM LIBRARY
C
      ENTRY ISYSLB(*)
      PRINT 1025
 1025 FORMAT('INITIALIZING SYSTEM LIBRARY')
      DO 500 I=1,20
  500 INDSYS(I)=0
      DO 510 I=1,40
  510 NDET(I,1)=0
      DO 520 I=1,16
      DO 520 J=1,20
      AVEFF(I,J)=CLEFF(I,J)=0.
      DO 520 K=1,10
  520 EBASE(I,K,J)=ERES(I,K,J)=0.
      RETURN 1
C
C   ENTRY POINT - LIST SYSTEM LIBRARY
C
      ENTRY LSYSLB(*)
      PRINT 1020
 1020 FORMAT(10X,'LISTING DETECTOR SYSTEM LIBRARY')
      NN=INDSYS(1)+1
      PRINT 1021,INDSYS(1)
 1021 FORMAT(10X,I5,' ENTRIES IN LIBRARY')
      IF(INDSYS(1).EQ.0) RETURN 1
      DO 600 I=2,NN
      IDET=NDET(1,I)
      PRINT 1022,INDSYS(I),NDET(1,I),NDET(2,I)
 1022 FORMAT(' SYSTEM NAME IS ',A8,2X,'NUMBER OF DETECTORS IS ',I3
     C  ,2X,'CHANNELS/DETECTOR IS ',I5)
      DO 570 IDK=1,10
      IF(NDATE(IDK,I).EQ.0) GOTO 570
      PRINT 1023,NDATE(IDK,I),
     C    (EBASE(N,IDK,I),ERES(N,IDK,I),N=1,IDET)
 1023 FORMAT(6X,'CALIBRATION DATE',I8,
     C   ' CHANNEL 0 ENERGY(MEV)/RESOLUTION(KEV)'/
     C  (10X,4(OPF8.3,'/',3PF5.2)))
  570 CONTINUE
      PRINT 1024,(AVEFF(N,I),CLEFF(N,I),N=1,IDET)
 1024 FORMAT(30X,'AVERAGE EFFICIENCIES/CONTROL LIMITS'/
     C  (10X,4(F8.5,'/',F6.5)))
  600 CONTINUE
      RETURN 1
      END
      SUBROUTINE UBKGLB(*)
C
C   THIS SUBROUTINE PROCESSES OPTIONS FOR UPDATING THE
C      BACKGROUND DATA LIBRARY
C
      COMMON /C1/ ISOIND(201),IUNIT,EISO(10,200),ELIM(2,200)
      COMMON /C2/ INDSYS(20),ISUNIT,NDET(2,20),EBASE(16,10,20)
      COMMON /C3/ ERES(16,10,20),CLEFF(16,20),AVEFF(16,20),NDATE(10,20)
```

```
      COMMON /C4/ INDEX(502),INDBKG(1001),NAMSYS,NSYS,IDATE,TBAK
      COMMON /C5/ INDEXC(502),INDCLB(1001),NUMISQ
      COMMON CNTS(1024,16)
      PRINT 1000
 1000 FORMAT(' FUNCTION - UPDATE BACKGROUND LIBRARY')
      ISUNIT=3
      REWIND ISUNIT
      READ(ISUNIT) INDSYS,NDET,EBASE,ERES,CLEFF,AVEFF,NDATE
      CALL OPENMS(4,INDEX,502,0)
C     PRINT 105
C 105 FORMAT ('INITIALIZE LIBRARY? Y/N')
C     READ (11,1002) IANS
C     IF (IANS.EQ.1HY) CALL IBKGLB(CNTS,IDET,ICHAN,*999)
  999 CALL READMS(4,INDBKG,1001,1)
  100 PRINT 1001
 1001 FORMAT(' TYPE "A" FOR ADD OR REPLACE'/6X,'"D" FOR DELETE'/
     C    6X,'"L" FOR LIST'/
     C    6X,'"P" TO PRINT INTEGRATED/AVERAGED BKG COUNTS'/
     C    6X,'"E" FOR END')
      READ (11,1002,END=500) IOPT
 1002 FORMAT(A10)
      IF(IDET.EQ.0) IDET=1
      IF(ICHAN.EQ.0) ICHAN=1
      IF(IOPT.EQ.1HE) GOTO 200
      IF(IOPT.EQ.1HA) CALL READBK(*100)
      IF(IOPT.EQ.1HD) CALL DBKGLB(CNTS,IDET,ICHAN,*100)
      IF(IOPT.EQ.1HL) CALL LBKGLB(CNTS,IDET,ICHAN,*100)
      IF(IOPT.EQ.1HP) CALL PBKGLB(CNTS,IDET,ICHAN,*100)
      IF(IOPT.EQ.3HINT) CALL IBKGLB(CNTS,IDET,ICHAN,*100)
      PRINT 1003,IOPT
 1003 FORMAT(//A10,' IS AN INVALID OPTION. TRY AGAIN.')
      GOTO 100
C
  500 IF(EOF(11).NE.0) GOTO 100
C
  200 CALL WRITMS(4,INDBKG,1001,1,-1)
      CALL CLOSMS(4)
      RETURN 1
      END
      SUBROUTINE READCT(NUNIT,CNTS,IDET,ICHAN,NC)
C
C      THIS MODULE READS THE RAW COUNT DATA CONTAINING
C        CALIBRATION,BACKGROUND AND SAMPLE DATA
C
      INTEGER X,Y
      DIMENSION CNTS(NC)
C
      X=1
      Y=8
      DO 100 I=1,4
        DO 90 J=1,3
          READ(NUNIT,1000)
   90   CONTINUE
        DO 80 K=1,57
          READ(NUNIT,1001)(CNTS(I1),I1=X,Y)
          X=X+8
          Y=X+7
   80   CONTINUE
  100 CONTINUE
      DO 70 L=1,3
        READ(NUNIT,1000)
   70 CONTINUE
      DO 60 M=1,28
        READ(NUNIT,1001)(CNTS(I1),I1=X,Y)
        X=X+8
        Y=X+7
   60 CONTINUE
C
 1000 FORMAT(80X)
 1001 FORMAT(8X,8(F8.0))
      RETURN
      END
      SUBROUTINE ABKGLB(CNTS,IDET,ICHAN,NAMFIL,*)
      COMMON /C1/ ISOIND(201),IUNIT,EISO(10,200),ELIM(2,200)
      COMMON /C2/ INDSYS(20),ISUNIT,NDET(2,20),EBASE(16,10,20)
      COMMON /C3/ ERES(16,10,20),CLEFF(16,20),AVEFF(16,20),NDATE(10,20)
      COMMON /C4/ INDEX(502),INDBKG(1001),NAMSYS,NSYS,IDATE,TBAK
      COMMON /C5/ INDEXC(502),INDCLB(1001),NUMISO
      COMMON /PRT1/ NCAL(5,16),REC(16),DPM(5,16),ID(8),ISO(5)
      COMMON /PRT2/ NCHNL(5,16),NCHNR(5,16),NCHN(5,16),RECMIN,RECMAX
```

```
      COMMON /PRT3/ERRL(5,16),ERRU(5,16),ERR(5,16),CSUM(5,16),BSUM(5,16)
      DIMENSION CNTS(ICHAN,IDET)
      DIMENSION EPEAK(5),EL(5),ER(5),NISO(5)
C
C     ENTRY POINT - ADD BACKGROUND DATA TO LIBRARY
C
      NUNIT=30
      PRINT 1000
 1000 FORMAT(6X,'ADDING BACKGROUND DATA TO THE LIBRARY.')
      NC=IDET*ICHAN
      CALL READCT(NUNIT,CNTS,IDET,ICHAN,NC)
      CALL BKSRCH(NUMREC)
      IF(NUMREC.EQ.0) GOTO 200
      PRINT 1002,NAMSYS,IDATE,NAMFIL
 1002 FORMAT(6X,'REPLACE BACKGROUND DATA. SYSTEM = ',A8,' DATE = ',I6,
     C  ' FILE NAME = ',A7)
      CALL WRITMS(4,CNTS,NC,NUMREC,-1)
      RETURN
  200 CALL BKOLD(JDATE,NUMREC)
      IF(NUMREC.EQ.0) GOTO 300
      PRINT 1003,NAMSYS,JDATE,NAMFIL
 1003 FORMAT(6X,'DELETE BACKGROUND DATA. SYSTEM = ',A8,' DATE = ',I6,
     C  ' FILE NAME = ',A7)
      PRINT 1004,NAMSYS,IDATE,NAMFIL
 1004 FORMAT(6X,'ADD BACKGROUND DATA. SYSTEM = ',A8,' DATE = ',I6,
     C  ' FILE NAME = ',A7)
      CALL WRITMS(4,CNTS,NC,NUMREC,-1)
      NBKG=(NUMREC-2)*3+3
      INDBKG(NBKG)=IDATE
      INDBKG(NBKG+1)=NAMFIL
      RETURN
  300 NN=3*INDBKG(1)+1
      DO 400 I=2,NN,3
      NBKG=I
      NUMREC=I/3+2
      IF(INDBKG(I+1).NE.0) GOTO 400
      IF(INDBKG(I).EQ.NAMSYS) GOTO 500
  400 CONTINUE
      INDBKG(1)=INDBKG(1)+1
      NUMREC=INDBKG(1)+1
      NBKG=(NUMREC-2)*3+2
  500 PRINT 1004,NAMSYS,IDATE,NAMFIL
      CALL WRITMS(4,CNTS,NC,NUMREC,0)
      INDBKG(NBKG)=NAMSYS
      INDBKG(NBKG+1)=IDATE
      INDBKG(NBKG+2)=NAMFIL
      RETURN
C
C      ENTRY POINT - INITIALIZE BACKGROUND LIBRARY
C
      ENTRY IBKGLB(CNTS,IDET,ICHAN,*)
      PRINT 1013
 1013 FORMAT('INITIALIZING BACKGROUND LIBRARY')
      DO 600 I=1,1001
  600 INDBKG(I)=0
      CALL WRITMS(4,INDBKG,1001,1,-1)
      RETURN 1
C
C       ENTRY POINT - DELETE ENTRY FROM BACKGROUND LIBRARY
C
      ENTRY DBKGLB(CNTS,IDET,ICHAN,*)
      PRINT 1005
 1005 FORMAT(6X,'DELETING BACKGROUND DATA FROM LIBRARY.')
      CALL ASKID(NAMSYS,IYR,MONTH,IDAY,IDATE)
      CALL BKSRCH(NUMREC)
      IF(NUMREC.NE.0) GOTO 700
      PRINT 1006,NAMSYS,IDATE
 1006 FORMAT(6X,'BACKGROUND TAKEN ON SYSTEM ',A8,' WITH DATE ',I6/
     C ' IS NOT IN LIBRARY')
      RETURN 1
  700 NBKG=(NUMREC-2)*3+3
      INDBKG(NBKG)=0
      PRINT 1007,NAMSYS,IDATE
 1007 FORMAT(6X,'BACKGROUND TAKEN ON SYSTEM ',A8,' WITH DATE ',I6/
     C   'HAS BEEN DELETED FROM THE LIBRARY')
      RETURN 1
C
C      ENTRY POINT - LIST BACKGROUND LIBRARY
C
      ENTRY LBKGLB(CNTS,IDET,ICHAN,*)
```

```
      PRINT 1008,INDBKG(1)
 1008 FORMAT(6X,'LIST BACKGROUND LIBRARY'/6X,I4,' ENTRIES IN FILE')
      NN=3*INDBKG(1)+1
      NSLOT=0
      PRINT 1015
 1015 FORMAT(10X,' SYSTEM ',2X,'DATE (YR/MON/DAY)',2X,'FILE NAME')
      IF(INDBKG(1).EQ.0) RETURN 1
      DO 800 I=2,NN,3
      IF(INDBKG(I+1).EQ.0) GOTO 750
      PRINT 1009,INDBKG(I),INDBKG(I+1),INDBKG(I+2)
 1009 FORMAT(10X,A8,7X,I6,9X,A7)
      GOTO 800
  750 NSLOT=NSLOT+1
  800 CONTINUE
      PRINT 1010,NSLOT
 1010 FORMAT(6X,I5,' EMPTY RECORDS IN LIBRARY')
  850 PRINT 1011
 1011 FORMAT(5X,'FULL LIST OF A BACKGROUND DATA SET? (Y OR N)')
      READ (11,1012,END=552)IANS
 1012 FORMAT(A1)
      IF(IANS.EQ.1HN) RETURN 1
      CALL ASKID(NAMSYS,IYR,MONTH,IDAY,IDATE)
      CALL BKSRCH(NUMREC)
      IF(NUMREC.NE.0) GOTO 900
      PRINT 1006,NAMSYS,IDATE
      GOTO 850
  900 NN=INDSYS(1)+1
      DO 910 I=2,NN
      NSYS=I
      IF (NAMSYS.EQ.INDSYS(I)) GOTO 920
  910 CONTINUE
  920 IDET=NDET(1,NSYS)
      ICHAN=NDET(2,NSYS)
      NC=IDET*ICHAN
      CALL READMS(4,CNTS,NC,NUMREC)
      K=(NUMREC-2)*3+4
      NAMFIL=INDBKG(K)
      CALL PRTCNT(CNTS,IDET,ICHAN,NAMSYS,IDATE,NAMFIL)
      GOTO 850
C
  552 IF(EOF(11).NE.0) GOTO 850
C
C      ENTRY POINT - PRINT BACKGROUND COUNTS (INTEGRATED AND AVERAGED)
C
      ENTRY PBKGLB(CNTS,IDET,ICHAN,*)
      IUNIT=9
      REWIND IUNIT
      READ(IUNIT) ISOIND,EISO,ELIM
  941 PRINT 2000
 2000 FORMAT(6X,'TYPE IN SYSTEM NAME OR "END"')
      READ (11,2001,END=941) NAMSYS
 2001 FORMAT(A8)
      IF(NAMSYS.EQ.3HEND) RETURN 1
      NN=INDSYS(1)+1
      DO 940 I=2,NN
      NSYS=I
      IF(NAMSYS.EQ.INDSYS(I)) GOTO 944
  940 CONTINUE
      PRINT 2002,NAMSYS
 2002 FORMAT(6X,A8,' IS NOT IN SYSTEM LIBRARY')
      GOTO 941
  944 CALL ASKISO(ISO,NUMISO,ISOTYP)
      DO 950 I=1,NUMISO
      CALL ISOSRC(ISO(I),NISO(I),*999)
      K=NISO(I)
      EPEAK(I)=EISO(1,K)
      EL(I)=ELIM(1,K)
      ER(I)=ELIM(2,K)
  950 CONTINUE
      IDET=NDET(1,NSYS)
      ICHAN=NDET(2,NSYS)
      CALL PRTBKG(CNTS,IDET,ICHAN,EPEAK,EL,ER,ERR,BSUM)
  999 RETURN 1
      END
      SUBROUTINE PRTCNT(CNTS,IDET,ICHAN,NAMSYS,IDATE,NAMFIL)
C
C      THIS MODULE PRINTS OUT RAW COUNT DATA AT THE TERMINAL
C        OR ON THE LINE PRINTER
C
      INTEGER CT16(16)
```

```
      DIMENSION CNTS(ICHAN,IDET),ICNTS(16)
      DATA CT16 /16 * 0/
  101 PRINT 1000
 1000 FORMAT(5X,' PRINT OUT AT TERMINAL? (Y OR N)')
      READ (11,1001,END=101) IANS
 1001 FORMAT(A1)
      IF (IANS.EQ.1HY) GOTO 300
      WRITE(8,1010) NAMSYS,IDATE,NAMFIL
 1010 FORMAT(' DATA TAKEN ON SYSTEM ',A8,' ON DATE ',I6,
     C  ' FROM FILE ',A7)
      WRITE(8,1011) (I,I=1,IDET)
 1011 FORMAT(1H0,5X,16I7)
      DO 100 I=1,ICHAN
      DO 90 ND=1,IDET
   90 ICNTS(ND)=CNTS(I,ND)
      WRITE(8,1014) I,(ICNTS(ND),ND=1,IDET)
 1014 FORMAT(I4,4X,16I7)
  100 CONTINUE
C
C        CALCULATE AND PRINT TOTAL COUNTS/DETECTOR
C
      DO 10 J = 1, IDET
        DO 10 I = 1, ICHAN
   10 CT16(J) = CT16(J) + INT(CNTS(I,J))
C         SUBTRACT FIRST AND SECOND CHANNEL TIME
C         VALUES FROM FIRST DETECTOR TOTAL
      CT16(1) = CT16(1) - CNTS(1,1) - CNTS(2,1)
      WRITE (8,1015) (CT16(I),I=1,16)
 1015 FORMAT (/,'TOTAL',3X,16I7,/)
      RETURN
  300 ND1=MINO(IDET,8)
      ND11=ND1+1
      PRINT 1010,NAMSYS,IDATE,NAMFIL
      PRINT 1012,(I,I=1,ND1)
 1012 FORMAT(1H0,5X,8I8)
      DO 400 I=1,ICHAN
      DO 390 ND=1,ND1
  390 ICNTS(ND)=CNTS(I,ND)
      PRINT 1013,I,(ICNTS(ND),ND=1,ND1)
 1013 FORMAT(I4,4X,8I8)
  400 CONTINUE
      IF(IDET.EQ.ND1) RETURN
      PRINT 1012,(I,I=ND11,IDET)
      DO 450 I=1,ICHAN
      DO 440 ND=ND11,IDET
  440 ICNTS(ND)=CNTS(I,ND)
  450 PRINT 1013,I,(ICNTS(ND),ND=ND11,IDET)
      RETURN
      END
      SUBROUTINE BKSRCH(NUMREC)
C
C       THIS MODULE SEARCHES THE BACKGROUND LIBRARY INDEX FOR A
C           DATA DECK IDENTIFIED BY ITS SYSTEM NAME AND DATE. IT RETURNS
C           THE RECORD NUMBER OF THE DATA OR ZERO IF NOT FOUND.
C
      COMMON /C1/ ISOIND(201),IUNIT,EISO(10,200),ELIM(2,200)
      COMMON /C2/ INDSYS(20),ISUNIT,NDET(2,20),EBASE(16,10,20)
      COMMON /C3/ ERES(16,10,20),CLEFF(16,20),AVEFF(16,20),NDATE(10,20)
      COMMON /C4/ INDEX(502),INDBKG(1001),NAMSYS,NSYS,IDATE,TBAK
      COMMON /C5/ INDEXC(502),INDCLB(1001),NUMISO
      NN=INDBKG(1)*3+1
      DO 100 I=2,NN,3
      IF(NAMSYS.NE.INDBKG(I)) GOTO 100
      JDATE=INDBKG(I+1)
      IF(IDATE.NE.JDATE) GOTO 100
      NUMREC=I/3+2
      RETURN
  100 CONTINUE
      NUMREC=0
      RETURN
      END
      SUBROUTINE BKOLD(JOLD,NUMREC)
C
C       THIS MODULE SEARCHES THE BACKGROUND LIBRARY FOR THE OLDEST
C         DECK IN THE LIBRARY FOR A PARTICULAR SYSTEM. IT RETURNS THE
C         RECORD NUMBER OF THE DECK UNLESS THERE ARE LESS THAN 10 DECKS
C         IN THE LIBRARY UNDER THE GIVEN SYSTEM NAME IN WHICH CASE IT
C         RETURNS A ZERO
C
      COMMON /C1/ ISOIND(201),IUNIT,EISO(10,200),ELIM(2,200)
```

```
      COMMON /C2/ INDSYS(20),ISUNIT,NDET(2,20),EBASE(16,10,20)
      COMMON /C3/ ERES(16,10,20),CLEFF(16,20),AVEFF(16,20),NDATE(10,20)
      COMMON /C4/ INDEX(502),INDBKG(1001),NAMSYS,NSYS,IDATE,TBAK
      COMMON /C5/ INDEXC(502),INDCLB(1001),NUMISO
      JOLD=9999999
      NDATA=0
      JD=999
      NN=INDBKG(1)*3+1
      DO 200 I=2,NN,3
      IF(NAMSYS.NE.INDBKG(I)) GOTO 200
      JDATE=INDBKG(I+1)
      NDATA=NDATA+1
      IF(JDATE.GT.JOLD) GOTO 200
      JOLD=JDATE
      NUMREC=I/3+2
  200 CONTINUE
      IF(NDATA.LT.10) NUMREC=0
      RETURN
      END
      SUBROUTINE ASKID(NAMSYS,IYR,MONTH,IDAY,IDATE)
C
C      ASK FOR DETECTOR SYSTEM NAME AND DATE OF A BACKGROUND DECK
C
  101 PRINT 1000
 1000 FORMAT(6X,'TYPE SYSTEM NAME ON WHICH BACKGROUND WAS TAKEN')
      READ (11,1005,END=501) NAMSYS
 1005 FORMAT(A8)
      PRINT 1001
 1001 FORMAT(6X,'INPUT DATE THAT BACKGROUND WAS TAKEN')
  102 PRINT 1008
 1008 FORMAT(6X,'TYPE 2-DIGIT YEAR, 2-DIGIT MONTH, 2-DIGIT DAY'/
     C  '          SEPARATED BY DASHES OR SLASHES, I.E. 86/02/03')
      READ (11,1002,END=500) IYR, MONTH, IDAY
 1002 FORMAT(I2,1X,I2,1X,I2)
      IDATE=IYR*10000+MONTH*100+IDAY
      RETURN
  500 IF(EOF(11).NE.0) GOTO 102
  501 IF(EOF(11).NE.0) GOTO 101
      END
      SUBROUTINE READBK(*)
C
C      READ 2 LINE HEADER ON BACKGROUND COUNT DATA
C
      COMMON /C1/ ISOIND(201),IUNIT,EISO(10,200),ELIM(2,200)
      COMMON /C2/ INDSYS(20),ISUNIT,NDET(2,20),EBASE(16,10,20)
      COMMON /C3/ ERES(16,10,20),CLEFF(16,20),AVEFF(16,20),NDATE(10,20)
      COMMON /C4/ INDEX(502),INDBKG(1001),NAMSYS,NSYS,IDATE,TBAK
      COMMON /C5/ INDEXC(502),INDCLB(1001),NUMISO
      COMMON CNTS(1024,16)
      DIMENSION WSA(8)
      CHARACTER*7 NAMFIL
C
      NUNIT=30
  101 PRINT 1001
 1001 FORMAT(5X,'TYPE FILE NAME CONTAINING BACKGROUND DATA')
      READ (11,1003,END=500) NAMFIL
 1003 FORMAT (A7)
      OPEN (UNIT=NUNIT,IOSTAT=IOS,ERR=103,FILE=NAMFIL,RECL=80)
      REWIND NUNIT
      READ(NUNIT,2000,END=102) (WSA(I),I=1,8)
      PRINT 2000, (WSA(I),I=1,8)
 2000 FORMAT(8A10)
C     DECODE(80,1000,WSA) NAMSYS,MONTH,IDAY,IYR
C1000 FORMAT(12X,A8,30X,I2,1X,I2,1X,I2)
C     IDATE=IYR*10000+MONTH*100+IDAY
      CALL ASKID (NAMSYS,IYR,MONTH,IDAY,IDATE)
      NN=INDSYS(1)+1
      DO 70 I=2,NN
      NSYS=I
      IF(NAMSYS.EQ.INDSYS(I))GOTO 100
   70 CONTINUE
      PRINT 1006,NAMSYS
 1006 FORMAT(1X,A8,' IS NOT IN DETECTOR SYSTEM LIBRARY')
      RETURN 1
  100 IDET=NDET(1,NSYS)
      ICHAN=NDET(2,NSYS)
      READ (NUNIT,2000,END=102) WSA
      CALL ABKGLB(CNTS,IDET,ICHAN,NAMFIL)
      RETURN 1
```

```
  500 IF(EOF(11).NE.0) GOTO 101
C
  102 IF(EOF(3).NE.0) CONTINUE
      PRINT 1005, NAMFIL
 1005 FORMAT(A7,' DOES NOT EXIST IN LOCAL SPACE '/
     C  '  PLEASE "GET" IT ')
      RETURN 1

  103 PRINT 1007, IOS
 1007 FORMAT ('OPEN NAMFIL FAILED WITH IOSTAT=',I4)
      RETURN 1
      END
      SUBROUTINE UCLBLB(*)
C
C    THIS SUBROUTINE PROCESSES OPTIONS FOR UPDATING THE
C       CALIBRATION DATA LIBRARY
C
      COMMON /C1/ ISOIND(201),IUNIT,EISO(10,200),ELIM(2,200)
      COMMON /C2/ INDSYS(20),ISUNIT,NDET(2,20),EBASE(16,10,20)
      COMMON /C3/ ERES(16,10,20),CLEFF(16,20),AVEFF(16,20),NDATE(10,20)
      COMMON /C4/ INDEX(502),INDBKG(1001),NAMSYS,NSYS,IDATE,TBAK
      COMMON /C5/ INDEXC(502),INDCLB(1001),NUMISO
      COMMON CNTS(1024,16)
      PRINT 1000
 1000 FORMAT(' FUNCTION - UPDATE CALIBRATION LIBRARY')
      ISUNIT=3
      REWIND ISUNIT
      READ(ISUNIT) INDSYS,NDET,EBASE,ERES,CLEFF,AVEFF,NDATE
      CALL OPENMS(6,INDEXC,502,0)
C     PRINT 999
C 999 FORMAT ('INITIALIZE CALIB LIB? Y/N')
C     READ (11,1002) IANS
C     IF (IANS.EQ.1HY) CALL ICLBLB(CNTS,IDET,ICHAN,*992)
C 992 CONTINUE
      CALL READMS(6,INDCLB,1001,1)
  100 PRINT 1001
 1001 FORMAT(/' TYPE "A" FOR ADD OR REPLACE'/6X,'"D" FOR DELETE'/
     C    6X,'"L" FOR LIST'/6X,'"C" TO RUN CALIBRATION CALCULATIONS'/
     C    6X,'"E" FOR END')
      READ (11,1002,END=500) IOPT
 1002 FORMAT(A10)
      IF(IDET.EQ.0) IDET=1
      IF(ICHAN.EQ.0) ICHAN=1
      IF(IOPT.EQ.1HE) GOTO 200
      IF(IOPT.EQ.1HA) CALL READCL(*100)
      IF(IOPT.EQ.1HD) CALL DCLBLB(CNTS,IDET,ICHAN,*100)
      IF(IOPT.EQ.1HL) CALL LCLBLB(CNTS,IDET,ICHAN,*100)
      IF(IOPT.EQ.1HC) CALL CALIB(*100)
      IF(IOPT.EQ.3HINT) CALL ICLBLB(CNTS,IDET,ICHAN,*100)
      PRINT 1003,IOPT
 1003 FORMAT(//A10,' IS AN INVALID OPTION. TRY AGAIN.')
      GOTO 100
C
  500 IF(EOF(11).NE.0) GOTO 100
C
  200 CALL WRITMS(6,INDCLB,1001,1,-1)
      CALL CLOSMS(6)
      RETURN 1
      END
      SUBROUTINE ACLBLB(CNTS,IDET,ICHAN,NAMFIL,*)
      COMMON /C1/ ISOIND(201),IUNIT,EISO(10,200),ELIM(2,200)
      COMMON /C2/ INDSYS(20),ISUNIT,NDET(2,20),EBASE(16,10,20)
      COMMON /C3/ ERES(16,10,20),CLEFF(16,20),AVEFF(16,20),NDATE(10,20)
      COMMON /C4/ INDEX(502),INDBKG(1001),NAMSYS,NSYS,IDATE,TBAK
      COMMON /C5/ INDEXC(502),INDCLB(1001),NUMISO
      DIMENSION CNTS(ICHAN,IDET)
C
C     ENTRY POINT - ADD/REPLACE DATA IN CALIBRATION DATA FILE
C
      NUNIT=31
      PRINT 1000
 1000 FORMAT(6X,'ADDING CALIBRATION DATA TO THE LIBRARY.')
      NC=IDET*ICHAN
      CALL READCT(NUNIT,CNTS,IDET,ICHAN,NC)
      CALL CLSRCH(NUMREC)
      IF(NUMREC.EQ.0) GOTO 200
      PRINT 1002,NAMSYS,IDATE,NAMFIL
 1002 FORMAT(6X,'REPLACE CALIBRATION DATA. SYSTEM = ',A8,' DATE = ',I6,
     C ' FILE NAME = ',A7)
      CALL WRITMS(6,CNTS,NC,NUMREC,-1)
```

```
      RETURN
  200 CALL CLBOLD(JDATE,NUMREC)
      IF(NUMREC.EQ.0) GOTO 300
      PRINT 1003,NAMSYS,JDATE,NAMFIL
 1003 FORMAT(6X,'DELETE CALIBRATION DATA. SYSTEM = ',A8,' DATE = ',I6,
     C ' FILE NAME = ',A7)
      PRINT 1004,NAMSYS,IDATE,NAMFIL
 1004 FORMAT(6X,'ADD CALIBRATION DATA. SYSTEM = ',A8,' DATE = ',I6,
     C ' FILE NAME = ',A7)
      CALL WRITMS(6,CNTS,NC,NUMREC,-1)
      NCLB=(NUMREC-2)*3+3
      INDCLB(NCLB)=IDATE
      INDCLB(NCLB+1)=NAMFIL
      RETURN
  300 NN=3*INDCLB(1)+1
      DO 400 I=2,NN,3
      NCLB=I
      NUMREC=I/3+2
      IF(INDCLB(I+1).NE.0) GOTO 400
      IF(INDCLB(I).EQ.NAMSYS) GOTO 500
  400 CONTINUE
      INDCLB(1)=INDCLB(1)+1
      NUMREC=INDCLB(1)+1
      NCLB=(NUMREC-2)*3+2
  500 PRINT 1004,NAMSYS,IDATE,NAMFIL
      CALL WRITMS(6,CNTS,NC,NUMREC,0)
      INDCLB(NCLB)=NAMSYS
      INDCLB(NCLB+1)=IDATE
      INDCLB(NCLB+2)=NAMFIL
      RETURN
C
C       ENTRY POINT - INITIALIZE CALIBRATION LIBRARY
C
      ENTRY ICLBLB(CNTS,IDET,ICHAN,*)
      PRINT 1013
 1013 FORMAT('INITIALIZING CALIBRATION LIBRARY')
      DO 600 I=1,1001
  600 INDCLB(I)=0
      CALL WRITMS(6,INDCLB,1001,1,-1)
      RETURN 1
C
C       ENTRY POINT - DELETE DATA FROM CALIBRATION LIBRARY
C
      ENTRY DCLBLB(CNTS,IDET,ICHAN,*)
      PRINT 1005
 1005 FORMAT(6X,'DELETING CALIBRATION DATA FROM LIBRARY.')
      CALL ASKCID(NAMSYS,IYR,MONTH,IDAY,IDATE)
      CALL CLSRCH(NUMREC)
      IF(NUMREC.NE.0) GOTO 700
      PRINT 1006,NAMSYS,IDATE
 1006 FORMAT(6X,'CALIBRATION TAKEN ON SYSTEM ',A8,' WITH DATE ',I6/
     C ' IS NOT IN LIBRARY')
      RETURN 1
  700 NCLB=(NUMREC-2)*3+3
      INDCLB(NCLB)=0
      PRINT 1007,NAMSYS,IDATE
 1007 FORMAT(6X,'CALIBRATION TAKEN ON SYSTEM ',A8,' WITH DATE ',I6/
     C   'HAS BEEN DELETED FROM THE LIBRARY')
      RETURN 1
C
C       ENTRY POINT - LIST CALIBRATION LIBRARY
C
      ENTRY LCLBLB(CNTS,IDET,ICHAN,*)
      PRINT 1008,INDCLB(1)
 1008 FORMAT(6X,'LIST CALIBRATION LIBRARY'/6X,I4,' ENTRIES IN FILE')
      NN=3*INDCLB(1)+1
      NSLOT=0
      PRINT 1015
 1015 FORMAT(10X,' SYSTEM ',2X,'DATE (YR/MON/DAY)',2X,'FILE NAME')
      IF(INDCLB(1).EQ.0) RETURN 1
      DO 800 I=2,NN,3
      IF(INDCLB(I+1).EQ.0) GOTO 750
      PRINT 1009,INDCLB(I),INDCLB(I+1),INDCLB(I+2)
 1009 FORMAT(10X,A8,7X,I6,9X,A7)
      GOTO 800
  750 NSLOT=NSLOT+1
  800 CONTINUE
      PRINT 1010,NSLOT
 1010 FORMAT(6X,I5,' EMPTY RECORDS IN LIBRARY')
  850 PRINT 1011
```

```
 1011 FORMAT(5X,'FULL LIST OF A CALIBRATION DATA SET? (Y OR N)')
      READ (11,1012,END=550) IANS
 1012 FORMAT(A1)
      IF(IANS.EQ.1HN) RETURN 1
      CALL ASKCID(NAMSYS,IYR,MONTH,IDAY,IDATE)
      CALL CLSRCH(NUMREC)
      IF(NUMREC.NE.0) GOTO 900
      PRINT 1006,NAMSYS,IDATE
      GOTO 850
  900 NN=INDSYS(1)+1
      DO 910 I=2,NN
      NSYS=I
      IF (NAMSYS.EQ.INDSYS(I)) GOTO 920
  910 CONTINUE
  920 IDET=NDET(1,NSYS)
      ICHAN=NDET(2,NSYS)
      NC=IDET*ICHAN
      CALL READMS(6,CNTS,NC,NUMREC)
      K=(NUMREC-2)*3+4
      NAMFIL=INDCLB(K)
      CALL PRTCNT(CNTS,IDET,ICHAN,NAMSYS,IDATE,NAMFIL)
      GOTO 850
C
  550 IF(EOF(11).NE.0) GOTO 850
C
      END
      SUBROUTINE CLSRCH(NUMREC)
C
C      THIS MODULE SEARCHES THE CALIBRATION LIBRARY INDEX FOR A
C          DATA DECK IDENTIFIED BY ITS SYSTEM NAME AND DATE. IT RETURNS
C          THE RECORD NUMBER OF THE DATA OR ZERO IF NOT FOUND.
C
      COMMON /C1/ ISOIND(201),IUNIT,EISO(10,200),ELIM(2,200)
      COMMON /C2/ INDSYS(20),ISUNIT,NDET(2,20),EBASE(16,10,20)
      COMMON /C3/ ERES(16,10,20),CLEFF(16,20),AVEFF(16,20),NDATE(10,20)
      COMMON /C4/ INDEX(502),INDBKG(1001),NAMSYS,NSYS,IDATE,TBAK
      COMMON /C5/ INDEXC(502),INDCLB(1001),NUMISO
      NN=INDCLB(1)*3+1
      DO 100 I=2,NN,3
      IF(NAMSYS.NE.INDCLB(I)) GOTO 100
      JDATE=INDCLB (I+1)
      IF(IDATE.NE.JDATE) GOTO 100
      NUMREC=I/3+2
      RETURN
  100 CONTINUE
      NUMREC=0
      RETURN
      END
      SUBROUTINE CLBOLD(JOLD,NUMREC)
C
C      THIS MODULE SEARCHES THE CALIBRATION LIBRARY FOR THE OLDEST
C        DECK IN THE LIBRARY FOR A PARTICULAR SYSTEM. IT RETURNS THE
C        RECORD NUMBER OF THE DECK UNLESS THERE ARE LESS THAN 10 DECKS
C        IN THE LIBRARY UNDER THE GIVEN SYSTEM NAME IN WHICH CASE IT
C        RETURNS A ZERO
C
      COMMON /C1/ ISOIND(201),IUNIT,EISO(10,200),ELIM(2,200)
      COMMON /C2/ INDSYS(20),ISUNIT,NDET(2,20),EBASE(16,10,20)
      COMMON /C3/ ERES(16,10,20),CLEFF(16,20),AVEFF(16,20),NDATE(10,20)
      COMMON /C4/ INDEX(502),INDBKG(1001),NAMSYS,NSYS,IDATE,TBAK
      COMMON /C5/ INDEXC(502),INDCLB(1001),NUMISO
      JOLD=9999999
      NDATA=0
      JD=999
      NN=INDCLB(1)*3+1
      DO 200 I=2,NN,3
      IF(NAMSYS.NE.INDCLB(I)) GOTO 200
      JDATE=INDCLB(I+1)
      NDATA=NDATA+1
      IF(JDATE.GT.JOLD) GOTO 200
      JOLD=JDATE
      NUMREC=I/3+2
  200 CONTINUE
      IF(NDATA.LT.10) NUMREC=0
      RETURN
      END
      SUBROUTINE ASKCID(NAMSYS,IYR,MONTH,IDAY,IDATE)
C
C      ASK FOR DETECTOR SYSTEM NAME AND DATE OF A CALIBRATION DECK
C
```

```
  101 PRINT 1000
 1000 FORMAT(6X,'TYPE SYSTEM NAME ON WHICH CALIBRATION WAS TAKEN')
      READ (11,1005,END=501) NAMSYS
 1005 FORMAT(A8)
      PRINT 1001
 1001 FORMAT(6X,'INPUT DATE THAT CALIBRATION WAS TAKEN')
  102 PRINT 1008
 1008 FORMAT(6X,'TYPE 2-DIGIT YEAR, 2-DIGIT MONTH, 2-DIGIT DAY'/
     C     '          SEPARATED BY DASHES OR SLASHES, I.E. 86/02/03')
      READ (11,1002,END=500) IYR, MONTH, IDAY
 1002 FORMAT(I2,1X,I2,1X,I2)
      IDATE=IYR*10000+MONTH*100+IDAY
      RETURN
  500 IF(EOF(11).NE.0) GOTO 102
  501 IF(EOF(11).NE.0) GOTO 101
      END
      SUBROUTINE READCL(*)
C
C      READ 2 LINE HEADER ON CALIBRATION COUNT DATA
C
      COMMON /C1/ ISOIND(201),IUNIT,EISO(10,200),ELIM(2,200)
      COMMON /C2/ INDSYS(20),ISUNIT,NDET(2,20),EBASE(16,10,20)
      COMMON /C3/ ERES(16,10,20),CLEFF(16,20),AVEFF(16,20),NDATE(10,20)
      COMMON /C4/ INDEX(502),INDBKG(1001),NAMSYS,NSYS,IDATE,TBAK
      COMMON /C5/ INDEXC(502),INDCLB(1001),NUMISO
      COMMON CNTS(1024,16)
      CHARACTER*7 NAMFIL
      DIMENSION WSA(8)
C
      NUNIT=31
  101 PRINT 1001
 1001 FORMAT(5X,'TYPE FILE NAME CONTAINING CALIBRATION DATA')
      READ (11,8000,END=500) NAMFIL
 8000 FORMAT (A7)
      OPEN(UNIT=NUNIT,IOSTAT=IOS,ERR=103,FILE=NAMFIL,RECL=80)
      REWIND NUNIT
      READ (NUNIT,2000,END=102) (WSA(I),I=1,8)
      PRINT 2000,(WSA(I),I=1,8)
 2000 FORMAT(8A10)
C     DECODE(80,1000,WSA) NAMSYS,MONTH,IDAY,IYR
C1000 FORMAT(12X,A8,33X,I2,1X,I2,1X,I2)
C     IDATE=IYR*10000+MONTH*100+IDAY
      CALL ASKCID (NAMSYS,IYR,MONTH,IDAY,IDATE)
      NN=INDSYS(1)+1
      DO 70 I=2,NN
      NSYS=I
      IF(NAMSYS.EQ.INDSYS(I))GOTO 100
   70 CONTINUE
      PRINT 1006,NAMSYS
 1006 FORMAT(1X,A8,' IS NOT IN DETECTOR SYSTEM LIBRARY')
      RETURN 1
  100 IDET=NDET(1,NSYS)
      ICHAN=NDET(2,NSYS)
      READ(NUNIT,2000,END=102)
      CALL ACLBLB(CNTS,IDET,ICHAN,NAMFIL)
      RETURN 1
C
  500 IF(EOF(11).NE.0) GOTO 101
C
  103 PRINT 1008, IOS
 1008 FORMAT('OPEN CAL NAMFIL FAILED WITH IOS= ',I4)
      RETURN 1
C
  102 PRINT 1005, NAMFIL
 1005 FORMAT(A7,' DOES NOT EXIST IN LOCAL SPACE  '/
     C '  PLEASE "GET" IT ')
      RETURN 1
      END
      SUBROUTINE CALIB(*)
      COMMON /C1/ ISOIND(201),IUNIT,EISO(10,200),ELIM(2,200)
      COMMON /C2/ INDSYS(20),ISUNIT,NDET(2,20),EBASE(16,10,20)
      COMMON /C3/ ERES(16,10,20),CLEFF(16,20),AVEFF(16,20),NDATE(10,20)
      COMMON /C4/ INDEX(502),INDBKG(1001),NAMSYS,NSYS,IDATE,TBAK
      COMMON /C5/ INDEXC(502),INDCLB(1001),NUMISO
      COMMON CNTS(1024,16)
C
C     THIS SUBROUTINE PROCESSES OPTIONS FOR RUNNING CALIBRATION
C          CALCULATIONS. IT CALLS SUBROUTINE ELIN TO DO ACTUAL
C           CALCULATIONS.
C
```

```
      IUNIT=9
      ISUNIT=3
   10 PRINT 1000
 1000 FORMAT(6X,'TYPE IN SYSTEM NAME OR "END"')
      READ (11,1001,END=600) NAMSYS
 1001 FORMAT(A8)
      IF(NAMSYS.EQ.3HEND) RETURN 1
      REWIND IUNIT
      READ(IUNIT) ISOIND,EISO,ELIM
      REWIND ISUNIT
      READ(ISUNIT) INDSYS,NDET,EBASE,ERES,CLEFF,AVEFF,NDATE
      NN=INDSYS(1)+1
      DO 50 I=2,NN
      NSYS=I
      IF(NAMSYS.EQ.INDSYS(I)) GOTO 90
   50 CONTINUE
      PRINT 1002,NAMSYS
 1002 FORMAT(6X,A8,' IS NOT IN SYSTEM LIBRARY')
      GOTO 10
   90 IDET=NDET(1,NSYS)
      ICHAN=NDET(2,NSYS)
      CALL ELIN(CNTS,IDET,ICHAN,*500)
      REWIND ISUNIT
      WRITE(ISUNIT) INDSYS,NDET,EBASE,ERES,CLEFF,AVEFF,NDATE
  500 RETURN 1
  600 IF(EOF(11).NE.0) GOTO 10
      END
      SUBROUTINE PEAK(NCHN,CNTS)
C
C       SEARCH FOR CHANNEL WITH MAX COUNTS. SEARCH WITHIN +/-4 OF
C          INITIAL CHANNEL. IF MAX COUNTS OCCURS IN 2 CHANNELS, THEN
C          PICK CHANNEL CLOSEST TO INITIAL CHANNEL
C
      DIMENSION CNTS(1)
      CMAX=CNTS(NCHN)
      NI=NCHN-4
      NL=NCHN+4
      IF(NI.LT.0) NI=0
      DO 100 I=NCHN,NL
      IF(CMAX.GE.CNTS(I)) GOTO 100
      CMAX=CNTS(I)
      NCHN=I
  100 CONTINUE
      I=NCHN
  200 I=I-1
      IF(I.LT.NI) RETURN
      IF(CMAX.GE.CNTS(I)) GOTO 200
      CMAX=CNTS(I)
      NCHN=I
      GOTO 200
      END
      SUBROUTINE ISOSRC(ISO,NISO,*)
C
C      SEARCH ISOTOPE LIBRARY FOR A PARTICULAR ISOTOPE NAME
C        RETURN WITH INDEX OF THE ISOTOPE
C
      COMMON /C1/ ISOIND(201),IUNIT,EISO(10,200),ELIM(2,200)
      COMMON /C2/ INDSYS(20),ISUNIT,NDET(2,20),EBASE(16,10,20)
      COMMON /C3/ ERES(16,10,20),CLEFF(16,20),AVEFF(16,20),NDATE(10,20)
      COMMON /C4/ INDEX(502),INDBKG(1001),NAMSYS,NSYS,IDATE,TBAK
      COMMON /C5/ INDEXC(502),INDCLB(1001),NUMISO
      NN=ISOIND(1)+1
   10 DO 100 I=2,NN
      NISO=I
      IF(ISO.EQ.ISOIND(I)) RETURN
  100 CONTINUE
   20 PRINT 1000,ISO
 1000 FORMAT(1X,A5,' IS NOT IN ISOTOPE LIBRARY.'/
     C' TYPE IN CORRECT ISOTOPE NAME OR "END" TO END CALCULATIONS')
      READ (11,1001,END=500) ISO
 1001 FORMAT(A5)
      IF(ISO.EQ.5HEND  ) RETURN 1
      GOTO 10
  500 IF(EOF(11).NE.0) GOTO 20
      END
      SUBROUTINE ELIN(CNTS,IDET,ICHAN,*)
      LOGICAL LIMOUT
      COMMON /C1/ ISOIND(201),IUNIT,EISO(10,200),ELIM(2,200)
      COMMON /C2/ INDSYS(20),ISUNIT,NDET(2,20),EBASE(16,10,20)
      COMMON /C3/ ERES(16,10,20),CLEFF(16,20),AVEFF(16,20),NDATE(10,20)
```

```
      COMMON /C4/ INDEX(502),INDBKG(1001),NAMSYS,NSYS,IDATE,TBAK
      COMMON /C5/ INDEXC(502),INDCLB(1001),NUMISO
      COMMON */STD/DPM(3)
      DIMENSION NCHN(3,16),EPEAK(3),ISO(3),NDEF(3)
      DIMENSION CNTS(ICHAN,IDET)
      DIMENSION ERR(16),EL(3),ER(3),EFF(16)
      DIMENSION SE(16),SEE(16),AEFF(16)
      DATA NDEF/22,35,52/
C
C
C       CALIBRATION CALCULATIONS DONE HERE -
C          1. USE HAL STD NO.5 OR INPUT A USER STD
C          2. CALIBRATE DETECTOR SYSTEM - ENERGY AS A LINEAR FUNCTION
C                   OF CHANNEL NUMBER
C              LINEAR COEFS FOR EACH CALIBRATION DECK ARE STORED IN
C                   THE DETECTOR SYSTEM LIBRARY
C          3. CALCULATE DETECTOR EFFICIENCIES, AVERAGE OVER ALL DECKS
C                   AND STORE IN DETECTOR SYSTEM LIBRARY
C          4. CALCULATE STD DEVIATIONS OF THE EFFICIENCIES AND
C                STORE IN DETECTOR SYSTEM LIBRARY
C
      LIMOUT=.FALSE.
      NUMISO=3
      NC=IDET*ICHAN
      DO 95 I=1,IDET
      AEFF(I)=0
      SE(I)=SEE(I)=0.
   95 CONTINUE
      DO 96 I=1,10
   96 NDATE(I,NSYS)=0
      IDECK=0
      NN=INDCLB(1)*3+1
      PRINT 1000,NAMSYS
 1000 FORMAT(1X,' RUNNING CALIBRATION CALCULATIONS FOR SYSTEM ',A8)
   10 PRINT 1004
 1004 FORMAT(' USE HAL''S STD NO. 5? (Y OR N)')
      READ (11,1005,END=550) IANS
 1005 FORMAT(A1)
      IF(IANS.EQ.1HY) GOTO 98
   20 PRINT 1006
 1006 FORMAT(' TYPE IN THE 3 ISOTOPES IN YOUR CALIBRATION STD')
      READ (11,1007,END=551) ISO
 1007 FORMAT(A5)
   30 PRINT 1008
 1008 FORMAT(' TYPE IN THE ACTIVITY OF EACH ISOTOPE (DPM)')
      READ (11,1009,END=552) DPM
 1009 FORMAT(F6.0)
      GOTO 99
C
  550 IF(EOF(11).NE.0) GOTO 10
  551 IF(EOF(11).NE.0) GOTO 20
  552 IF(EOF(11).NE.0) GOTO 30
C
   98 ISO(1)=5HPU242
      ISO(2)=5HPU239
      ISO(3)=5HPU238
      DPM(1)=407.
      DPM(2)=482.
      DPM(3)=468.
C          CODE FROM LABEL 99 TO 210 READS THE CALIBRATION LIBRARY,
C          FINDS MATCHING SYSEM NAMES, LOCATES THE SYSTEM IN THE
C          ISOTOPE LIBRARY, DETERMINES THE INITIAL CHANNEL, AND
C          FINDS THE PEAK CHANNEL
   99 DO 210 M=2,NN,3
      IF(NAMSYS.NE.INDCLB(M)) GOTO 210
      IF(INDCLB(M+1).EQ.0) GOTO 210
      NUMREC=M/3+2
      CALL READMS(6,CNTS,NC,NUMREC)
      IDECK=IDECK+1
      NDATE(IDECK,NSYS)=INDCLB(M+1)
      DO 200 ND=1,IDET
      DO 100 I=1,3
      CALL ISOSRC(ISO(I),NISO,*900)
      IF(ERES(ND,IDECK,NSYS).EQ.0)
     C  NCHN(I,ND)=(EISO(1,NISO)-EBASE(ND,1,NSYS))/
     C  ERES(ND,1,NSYS)+.5
      IF(ERES(ND,IDECK,NSYS).NE.0)
     C  NCHN(I,ND)=(EISO(1,NISO)-EBASE(ND,IDECK,NSYS))/
     C  ERES(ND,IDECK,NSYS)+.5
      EPEAK(I)=EISO(1,NISO)
```

```
          .(I)=ELIM(1,NISO)
        ER(I)=ELIM(2,NISO)
        CALL PEAK(NCHN(I,ND),CNTS(1,ND))
  100 CONTINUE
        ERR(ND)=(EPEAK(3)-EPEAK(1))/(NCHN(3,ND)-NCHN(1,ND))
        EBASE(ND,IDECK,NSYS)=EPEAK(1)-NCHN(1,ND)*ERR(ND)
        ERES(ND,IDECK,NSYS)=ERR(ND)
  200 CONTINUE
C
C           CODE FROM LABEL 210 TO LABEL 300 READS THE CALIBRATION
C           AND ISOTOPE LIBRARIES, DETERMINES THE INITIAL CHANNEL,
C           FINDS THE PEAK AND DETERMINES THE AVERAGE EFFICIENCY
C
  210 CONTINUE
        IDECK=0
        DO 300 M=2,NN,3
        IF(NAMSYS.NE.INDCLB(M)) GOTO 300
        IF(INDCLB(M+1).EQ.0) GOTO 300
        NUMREC=M/3+2
        CALL READMS(6,CNTS,NC,NUMREC)
        IDECK=IDECK+1
        NDATE(IDECK,NSYS)=INDCLB(M+1)
        DO 250 ND=1,IDET
        DO 250 I=1,3
        CALL ISOSRC(ISO(I),NISO,*900)
        NCHN(I,ND)=(EISO(1,NISO)-EBASE(ND,IDECK,NSYS))/
      C  ERES(ND,IDECK,NSYS)+.5
        EPEAK(I)=EISO(1,NISO)
        EL(I)=ELIM(1,NISO)
        ER(I)=ELIM(2,NISO)
        CALL PEAK(NCHN(I,ND),CNTS(1,ND))
  250 CONTINUE
        CALL AVGEFF
      C  (CNTS,IDET,ICHAN,NCHN,EPEAK,EL,ER,
      C   ERES(1,IDECK,NSYS),EFF,INDCLB(M+1))
        CALL CHKEFF(EFF,IDET,IDECK,LIMOUT)
        CALL SIGEFF(EFF,SE,SEE,IDET)
        DO 290 ND=1,IDET
  290 AEFF(ND)=AEFF(ND)+EFF(ND)
  300 CONTINUE
        DO 400 ND=1,IDET
        AVEFF(ND,NSYS)=AEFF(ND)/IDECK
        VAR=SEE(ND)-SE(ND)*SE(ND)/IDECK
        IF(VAR.LT.1.E-8) VAR=0
        CLEFF(ND,NSYS)=0.
        IF(IDECK.GT.1) CLEFF(ND,NSYS)=3.*SQRT(VAR/(IDECK-1))
  400 CONTINUE
        PRINT 1001,IDECK
        WRITE(8,1001) IDECK
 1001 FORMAT(' DETECTORS CALIBRATED USING ',I3,' DATA SETS')
        DO 500 IDK=1,IDECK
        WRITE(8,1002) NDATE(IDK,NSYS),
      C   (EBASE(N,IDK,NSYS),ERES(N,IDK,NSYS),N=1,IDET)
  500 PRINT 1002,NDATE(IDK,NSYS),
      C   (EBASE(N,IDK,NSYS),ERES(N,IDK,NSYS),N=1,IDET)
 1002 FORMAT(6X,' CALIBRATION DATE ',I8,
      C  '  CHANNEL O ENERGY(MEV)/RESOLUTION(KEV)'/
      C  (10X,4(OPF8.3,'/',3PF5.2)))
        PRINT 1003,(AVEFF(N,NSYS),CLEFF(N,NSYS),N=1,IDET)
        WRITE(8,1003)(AVEFF(N,NSYS),CLEFF(N,NSYS),N=1,IDET)
 1003 FORMAT(30X,'AVERAGE EFFICIENCIES/CONTROL LIMITS'/
      C   (10X,4(F8.5,'/',F6.5)))
        IF(LIMOUT) GOTO 800
        RETURN
  800 PRINT 1010
 1010 FORMAT(' ONE OR MORE DETECTOR EFFICIENCIES ARE OUTSIDE'/
      C  '    THE CONTROL LIMITS.'/
      C  '   DO YOU WANT TO SAVE THESE CALCULATIONS? (Y OR N)')
        READ (11,1005,END=554) IANS
        IF (IANS.EQ.1HN) GOTO 850
        IF(IANS.NE.1HY) GOTO 800
        RETURN
  554 IF(EOF(11).NE.0) GOTO 800
  850 PRINT 1011
 1011 FORMAT('  CALIBRATION CALCULATIONS NOT SAVED..')
  900 RETURN 1
        END
        SUBROUTINE CHKEFF(EFF,IDET,IDECK,LIMOUT)
C
C       CHECK A DETECTOR EFFICIENCY AGAINST ITS CONTROL LIMITS
```

```
C         PRINT WARNING IF OUSIDE RANGE
C
      COMMON /C1/ ISOIND(201),IUNIT,EISO(10,200),ELIM(2,200)
      COMMON /C2/ INDSYS(20),ISUNIT,NDET(2,20),EBASE(16,10,20)
      COMMON /C3/ ERES(16,10,20),CLEFF(16,20),AVEFF(16,20),NDATE(10,20)
      COMMON /C4/ INDEX(502),INDBKG(1001),NAMSYS,NSYS,IDATE,TBAK
      COMMON /C5/ INDEXC(502),INDCLB(1001),NUMISO
      LOGICAL LIMOUT
      DIMENSION EFF(IDET)
      DO 100 I=1,IDET
      CL1=AVEFF(I,NSYS)-CLEFF(I,NSYS)
      CL2=AVEFF(I,NSYS)+CLEFF(I,NSYS)
      IF(CL1.LE.EFF(I).AND.CL2.GE.EFF(I)) GOTO 100
      PRINT 1000,NDATE(IDECK,NSYS),I,EFF(I),CL1,CL2
 1000 FORMAT('  WARNING .. DETECTOR EFFICIENCY OUT OF LIMITS.'/
     C  '          DATE = ',I6,'  DETECTOR NO. = ',I4/
     C  '          EFFICIENCY = ',F10.5,'  CONTROL LIMITS = ',F10.5,'-',
     C F10.5)
      LIMOUT=.TRUE.
  100 CONTINUE
      RETURN
      END
      SUBROUTINE AVGEFF(CNTS,IDET,ICHAN,NCHN,EPEAK,EL,ER,ERR,EFF,NDATE)
C
C       CALCULATE AVG DETECTOR EFFICIENCIES
C
      COMMON /STD/DPM(3)
      DIMENSION CSUM(5,16),BSUM(5,16),CNTS(ICHAN,IDET)
      DIMENSION NL(3),NR(3),EFF(16),NCHN(3,16)
      DIMENSION EL(3),ER(3),ERR(16),EPEAK(3)
      TMIN=CNTS(1,1)/60.
      DO 200 ND=1,IDET
      DO 100 I=1,3
      NL(I)=EL(I)/ERR(ND)+.5
  100 NR(I)=ER(I)/ERR(ND)+.5
  200 CALL INTGRT(CNTS(1,ND),NCHN(1,ND),NL,NR,CSUM(1,ND),3)
      CALL AVGBKG(CNTS,IDET,ICHAN,EPEAK,EL,ER,ERR,BSUM)
      DO 300 ND=1,IDET
      EFF(ND)=D=0
      DO 300 I=1,3
      EFF(ND)=EFF(ND)+(CSUM(I,ND)/TMIN-BSUM(I,ND))
  300 D=DPM(I)+D
      DO 400 ND=1,IDET
  400 EFF(ND)=EFF(ND)/D
      PRINT 1000,NDATE,(EFF(ND),ND=1,IDET)
      WRITE(8,1000) NDATE,(EFF(ND),ND=1,IDET)
 1000 FORMAT(' AVGEFF',2X,I6/(2X,8F12.5))
      RETURN
      END
      SUBROUTINE SIGEFF(EFF,SE,SEE,IDET)
C
C     DO THE SUMS USED IN CALCULATING THE STANDARD DEVIATION OF THE
C          EFFICIENCIES
C
      DIMENSION EFF(16),SE(16),SEE(16)
      DO 100 I=1,IDET
      SE(I)=SE(I)+EFF(I)
  100 SEE(I)=SEE(I)+EFF(I)*EFF(I)
      RETURN
      END
      SUBROUTINE INTGRT(CNTS,NCHN,NL,NR,SUM,NUMISO)
C
C     SUM THE COUNTS FROM "NL" CHANNELS LEFT OF NCHN TO
C        "NR" CHANNELS RIGHT OF NCHN
C
      DIMENSION SUM(1),CNTS(1),NCHN(1),NL(1),NR(1)
      DO 100 I=1,NUMISO
      SUM(I)=0
      N1=NCHN(I)-NL(I)
      N2=NCHN(I)+NR(I)
      IF(N1.LT.0) N1=0
      DO 50 N=N1,N2
   50 SUM(I)=SUM(I)+CNTS(N)
  100 CONTINUE
      RETURN
      END
      SUBROUTINE AVGBKG(CNTS,IDET,ICHAN,EPEAK,EL,ER,ERR,BSUM)
C
C      AVERAGE THE BACKGROUND DECKS FOR A PARTICULAR DETECTOR
C         SYSTEM
```

```
C
      COMMON /C1/ ISOIND(201),IUNIT,EISO(10,200),ELIM(2,200)
      COMMON /C2/ INDSYS(20),ISUNIT,NDET(2,20),EBASE(16,10,20)
      COMMON /C3/ ERES(16,10,20),CLEFF(16,20),AVEFF(16,20),NDATE(10,20)
      COMMON /C4/ INDEX(502),INDBKG(1001),NAMSYS,NSYS,IDATE,TBAK
      COMMON /C5/ INDEXC(502),INDCLB(1001),NUMISO
      DIMENSION SUM(5),BSUM(5,16),CNTS(ICHAN,IDET)
      DIMENSION NL(5),NR(5),EL(5),ER(5),NCHN(5),ERR(16),EPEAK(5)
      DIMENSION BCNT(5,16)
      EQUIVALENCE (BCNT,CLEFF)
      LOGICAL PRTOUT
      PRTOUT=.FALSE.
      CALL OPENMS(4,INDEX,502,0)
      CALL READMS(4,INDBKG,1001,1)
   30 NC=IDET*ICHAN
      DO 50 ND=1,IDET
   50 BSUM(1,ND)=BSUM(2,ND)=BSUM(3,ND)=BSUM(4,ND)=BSUM(5,ND)=0.
      IDECK=0
      NN=INDBKG(1)*3+1
      DO 300 M=2,NN,3
      IF(NAMSYS.NE.INDBKG(M)) GOTO 300
      IF(INDBKG(M+1).EQ.0) GOTO 300
      NNDATE=0
      DO 70 I=1,10
      IF(NDATE(I,NSYS).EQ.0) GOTO 70
      IF(INDBKG(M+1).LT.NDATE(I,NSYS)) GOTO 70
      IF(NNDATE.GT.NDATE(I,NSYS)) GOTO 70
      ICAL=I
      NNDATE=NDATE(I,NSYS)
   70 CONTINUE
      IF(NNDATE.NE.0) GOTO 90
      NNDATE=99999999
      DO 80 I=1,10
      IF(NDATE(I,NSYS).EQ.0) GOTO 80
      IF(NDATE(I,NSYS).GE.NNDATE) GOTO 80
      ICAL=I
      NNDATE=NDATE(I,NSYS)
   80 CONTINUE
   90 NUMREC=M/3+2
      CALL READMS(4,CNTS,NC,NUMREC)
      IDECK=IDECK+1
      TBAK=CNTS(1,1) /60.
      DO 200 ND=1,IDET
      DO 100 I=1,NUMISO
      NCHN(I)=(EPEAK(I)-EBASE(ND,ICAL,NSYS))/ERES(ND,ICAL,NSYS)+.5
      NL(I)=EL(I)/ERES(ND,ICAL,NSYS)+.5
  100 NR(I)=ER(I)/ERES(ND,ICAL,NSYS)+.5
      CALL INTGRT(CNTS(1,ND),NCHN,NL,NR,SUM,NUMISO)
      DO 110 I=1,NUMISO
      IF(PRTOUT) BCNT(I,ND)=SUM(I)
  110 BSUM(I,ND)=BSUM(I,ND)+SUM(I)
  200 CONTINUE
      IF(.NOT.PRTOUT) GOTO 300
      WRITE(8,1000) NAMSYS,INDBKG(M+1),(ND,ND=1,IDET)
 1000 FORMAT(2X,'INTEGRATED BACKGROUND COUNTS FOR ',A8,2X,I6/
     C ' PEAK(MEV)',16I7)
      WRITE(8,1001) (EPEAK(I),(BCNT(I,ND),ND=1,IDET),I=1,NUMISO)
 1001 FORMAT(1X,F8.3,1X,16F7.0)
  300 CONTINUE
      IF(PRTOUT) WRITE(8,1002)NAMSYS,(ND,ND=1,IDET)
 1002 FORMAT(2X,'AVERAGED BACKGROUND COUNTS FOR ',A8/
     C  ' PEAK(MEV)',16I7)
      DO 400 I=1,NUMISO
      DO 400 ND=1,IDET
      IF(PRTOUT) BCNT(I,ND)=BSUM(I,ND)/IDECK
  400 BSUM(I,ND)=BSUM(I,ND)/IDECK/TBAK
      IF(.NOT.PRTOUT) GOTO 410
      WRITE(8,1003) (EPEAK(I),(BCNT(I,ND),ND=1,IDET),I=1,NUMISO)
 1003 FORMAT(1X,F8.3,1X,16F7.2)
  410 IF(.NOT.PRTOUT) CALL CLOSMS(4)
      RETURN
C
C     ENTRY POINT TO PRINT OUT INTEGRATED BKG COUNTS AND AVERAGES
C
      ENTRY PRTBKG(CNTS,IDET,ICHAN,EPEAK,EL,ER,ERR,BSUM)
      PRTOUT=.TRUE.
      GOTO 30
      END
      SUBROUTINE ASKSID(NAMSYS,IYR,MONTH,IDAY,IDATE)
C
```

```
C      CHARACTER*8 NAMSYS, SYSNAM
C       ASK FOR DETECTOR SYSTEM NAME AND DATE OF A CALIBRATION DECK
C
C      NAMSYS = '16 ALPHA'
  101 PRINT 1000
 1000 FORMAT(6X,'TYPE SYSTEM NAME ON WHICH SAMPLE WAS TAKEN')
C     C  8X,'DEFAULT = 16 ALPHA')
      READ (11,1005,END=510) NAMSYS
  510 IF (EOF(11).NE.0) GOTO 101
C     NAMSYS = SYSNAM
 1005 FORMAT(A8)
  104 PRINT 1001
 1001 FORMAT(6X,'INPUT DATE THAT SAMPLE WAS TAKEN')
  102 PRINT 1008
 1008 FORMAT(6X,'TYPE 2-DIGIT YEAR, 2-DIGIT MONTH, 2-DIGIT DAY'/
     C     '          SEPARATED BY DASHES OR SLASHES, I.E. 86/02/03')
      READ (11,1002,END=500) IYR, MONTH, IDAY
 1002 FORMAT(I2,1X,I2,1X,I2)
      IDATE=IYR*10000+MONTH*100+IDAY
      RETURN
  500 IF(EOF(11).NE.0) GOTO 102
      END
      SUBROUTINE READSA(IDET,ICHAN,CNTS,*)
C
C       READ HEADER LINES FROM FRONT OF SAMPLE DATA COUNTS
C          THEN CALL READCT TO READ RAW DATA COUNTS
C
      COMMON /C1/ ISOIND(201),IUNIT,EISO(10,200),ELIM(2,200)
      COMMON /C2/ INDSYS(20),ISUNIT,NDET(2,20),EBASE(16,10,20)
      COMMON /C3/ ERES(16,10,20),CLEFF(16,20),AVEFF(16,20),NDATE(10,20)
      COMMON /C4/ INDEX(502),INDBKG(1001),NAMSYS,NSYS,IDATE,TBAK
      COMMON /C5/ INDEXC(502),INDCLB(1001),NUMISO
      COMMON /SDATA1/ NTISS(16),WETWGT(16),WTAN(16),WT(16)
      COMMON /SDATA2/ SETNO(16),BOOK(16),PAGE(16)
      COMMON /PRT1/ NCAL(5,16),REC(16),DPM(5,16),ID(8),ISO(5)
      COMMON /PRT2/ NCHNL(5,16),NCHNR(5,16),NCHN(5,16),RECMIN,RECMAX
      COMMON /PRT3/ERRL(5,16),ERRU(5,16),ERR(5,16),CSUM(5,16),BSUM(5,16)
      CHARACTER*7 NAMFIL, FILNAM
      INTEGER PAGE
      DIMENSION WSA(8)
C
      NUNIT=32
  101 PRINT 1001
 1001 FORMAT(5X,'TYPE FILE NAME CONTAINING SAMPLE DATA')
      READ(11,8000,END=500) NAMFIL
 8000 FORMAT (A7)
      OPEN(UNIT=NUNIT,IOSTAT=IOS,ERR=103,FILE=NAMFIL,RECL=80)
      REWIND NUNIT
      READ(NUNIT,2000,END=102) (ID(I),I=1,8)
   68 PRINT 2000, (ID(I),I=1,8)
 2000 FORMAT(8A10)
C     DECODE(80,1000,WSA) NAMSYS,ID,MONTH,IDAY,IYR
C1000 FORMAT(12X,A8,11A4,I2,1X,I2,1X,I2)
C     IDATE=IYR*10000+MONTH*100+IDAY
      CALL ASKSID(NAMSYS,IYR,MONTH,IDAY,IDATE)
      NN=INDSYS(1)+1
      DO 70 I=2,NN
      NSYS=I
      IF(NAMSYS.EQ.INDSYS(I)) GOTO 100
   70 CONTINUE
      PRINT 1006,NAMSYS
 1006 FORMAT(1X,A8,' IS NOT IN DETECTOR SYSTEM LIBRARY')
      PRINT 1007
 1007 FORMAT(2X,'UNABLE TO CONTINUE.. RETURNING TO MAIN MENU.')
      RETURN 1
  100 IDET=NDET(1,NSYS)
      ICHAN=NDET(2,NSYS)
      NC=IDET*ICHAN
      READ(NUNIT,2000,END=102) (WSA(K),K=1,8)
C
  301 PRINT 3000
 3000 FORMAT ('ENTER THE NAME OF YOUR JIMX FILE')
      READ(11,8000,END=502) FILNAM
      OPEN(UNIT=35,IOSTAT=IOS,ERR=888,FILE=FILNAM,RECL=80)
      REWIND 35
  201 PRINT 105, FILNAM
  105 FORMAT('ENTER THE NUMBER OF LINES IN ',A7)
      READ(11,106,END=501) NUMJIM
  106 FORMAT (I2)
C
```

```
      DO 200 I=1,NUMJIM
      READ(35,1010,END=108) SETNO(I),NTISS(I),WETWGT(I),BOOK(I),PAGE(I),
     C     WTAN(I),WT(I)
  200 CONTINUE
 1010 FORMAT(A5,5X,I4,16X,F7.2,1X,A6,I3,13X,F7.2,2X,F7.2)
C
      CALL READCT(NUNIT,CNTS,IDET,ICHAN,NC)
      RETURN
C
  500 IF(EOF(11).NE.0) GOTO 101
  501 IF(EOF(11).NE.0) GOTO 201
  502 IF(EOF(11).NE.0) GOTO 301
C
  102 PRINT 1005, NAMFIL
 1005 FORMAT(A7,' DOES NOT EXIST IN LOCAL SPACE '/
     C '  PLEASE "GET" IT ')
      RETURN 1
C
  108 II=I-1
      PRINT 1003, II, FILNAM
 1003 FORMAT (' THERE ARE ONLY ',I2,' LINES IN ',A7,/,
     C  '  PLEASE START OVER')
      RETURN 1
C
  888 PRINT 1009, FILNAM, IOS
 1009 FORMAT('OPEN ',A7,' FAILED WITH IOS = ',I4)
C
  103 PRINT 1008, NAMFIL, IOS
 1008 FORMAT ('OPEN SAMPLE ',A7,' FAILED WITH IOS= ',I4)
      RETURN 1
      END
      SUBROUTINE SAMPLE(*)
      COMMON /C1/ ISOIND(201),IUNIT,EISO(10,200),ELIM(2,200)
      COMMON /C2/ INDSYS(20),ISUNIT,NDET(2,20),EBASE(16,10,20)
      COMMON /C3/ ERES(16,10,20),CLEFF(16,20),AVEFF(16,20),NDATE(10,20)
      COMMON /C4/ INDEX(502),INDBKG(1001),NAMSYS,NSYS,IDATE,TBAK
      COMMON /C5/ INDEXC(502),INDCLB(1001),NUMISO
      COMMON /SDATA1/ NTISS(16),WETWGT(16),WTAN(16),WT(16)
      COMMON /SDATA2/ SETNO(16),BOOK(16),PAGE(16)
C
      DIMENSION CNTS(1024,16), PKFLAG(1024,16)
C
C       1. READ UP ISOTOPE AND SYSTEM LIBRARIES
C       2. CALL READSA TO READ SAMPLE DATA
C.      3. CALL SACALC TO ANALYZE SAMPLE DATA
C
C
      IUNIT=9
      ISUNIT=3
      REWIND IUNIT
      REWIND ISUNIT
      READ(IUNIT) ISOIND,EISO,ELIM
      READ(ISUNIT) INDSYS,NDET,EBASE,ERES,CLEFF,AVEFF,NDATE
      NN=INDSYS(1)+1
      CALL READSA(IDET,ICHAN,CNTS,*900)
      CALL SACALC(IDET,ICHAN,CNTS,PKFLAG)
      CLOSE (32)
      PRINT 1000
 1000 FORMAT(/' SAMPLE CALCULATIONS COMPLETED SUCCESSFULLY,'/
     C '     RETURNING TO MAIN MENU . . .')
  900 RETURN 1
      END
      SUBROUTINE SACALC(IDET,ICHAN,CNTS,PKFLAG)
C
C       1. ASK USER FOR SPIKE, MIN/MAX RECOVERIES, ISOTOPE TYPE
C       2. CALL FINDCA TO FIND APPROPRIATE CALIBRATION DECK
C       3. CALL AVGBKG TO GET AVERAGED BACKGROUNDS
C       4. CALCULATE RECOVERY AND DPM
C       5. CALL ERROR TO CALCULATE PROPAGATION OF ERRORS
C       6. CALL PRTRAW AND PRTRES TO OUTPUT RAW DATA AND RESULTS
C
      COMMON /C1/ ISOIND(201),IUNIT,EISO(10,200),ELIM(2,200)
      COMMON /C2/ INDSYS(20),ISUNIT,NDET(2.20),EBASE(16,10,20)
      COMMON /C3/ ERES(16,1C,20),CLEFF(16,20),AVEFF(16,20),NDATE(10,20)
      COMMON /C4/ INDEX(502),INDBKG(1001),NAMSYS,NSYS,IDATE,TBAK
      COMMON /C5/ INDEXC(502),INDCLB(1001),NUMISO
      COMMON /SDATA1/ NTISS(16),WETWGT(16),WTAN(16),WT(16)
      COMMON /SDATA2/ SETNO(16),BOOK(16),PAGE(16)
      COMMON /PRT1/ NCAL(5,16),REC(16),DPM(5,16),ID(8),ISO(5)
      COMMON /PRT2/ NCHNL(5,16),NCHNR(5,16),NCHN(5,16),RECMIN,RECMAX
```

```
      COMMON /PRT3/ERRL(5,16),ERRU(5,16),ERR(5,16),CSUM(5,16),BSUM(5,16)
      DIMENSION EPEAK(5),EL(5),ER(5),NISO(5),NL(5),NR(5)
      DIMENSION CNTS(ICHAN,IDET), PKFLAG(ICHAN,IDET)
      DIMENSION NDIFF(5)
C
C
      PRINT 1006,IDATE
 1006 FORMAT('  RUNNING CALCULATIONS FOR SAMPLES DATED ',I6)
      DO 10 J=1,16
      DO 9 I=1,5
        NCAL(I,J) = 0
        DPM(I,J) = 0
        NCHN(I,J) = 0
        NCHNL(I,J) = 0
        NCHNR(I,J) = 0
        ERR(I,J) = 0
        ERRL(I,J) = 0
        ERRU(I,J) = 0
        BSUM(I,J) = 0
        CSUM(I,J) = 0
    9 CONTINUE
   10 CONTINUE
      DO 8 I=1,ICHAN
        DO 8 J=1,IDET
          PKFLAG(I,J)= 1H
    8 CONTINUE
      DO 11 I=1,16
   11 REC(I)=0
      CALL ASKISO(ISO,NUMISO,ISOTYP)
  101 PRINT 1004
 1004 FORMAT('  TYPE IN SPIKE LEVEL (DPM)')
      READ (11,1005,END=600) SPLEV
 1005 FORMAT(F7.4)
      RECMIN=40.
      RECMAX=150.
  102 PRINT 1007
 1007 FORMAT('  TYPE IN MIN RECOVERY IN PERCENT -- DEFAULT = 40')
      READ (11,1005,END=201) MIN
  201 IF(EOF(11).NE.0) GOTO 103
      RECMIN=MIN
  103 PRINT 1008
 1008 FORMAT('  TYPE IN MAX RECOVERY IN PERCENT -- DEFAULT = 150')
      READ (11,1005,END=202) MAX
  202 IF(EOF(11).NE.0) GOTO 104
      RECMAX=MAX
  104 RECMIN=RECMIN/100.
      RECMAX=RECMAX/100.
  120 CALL FINDCA(ICAD)
      TMIN=CNTS(1,1)/60.
      PRINT 1000, CNTS(1,1)
 1000 FORMAT ('ENTER COUNT TIME IN SECONDS--DEFAULT IS ',F6.0)
      READ (11,1001,END=222) TTIME
 1001 FORMAT (F7.0)
  222 IF (EOF(11).NE.0) GOTO 223
      TMIN=TTIME/60.
  223 CONTINUE
      DO 400 ND=1,IDET
      DO 250 I=1,NUMISO
      CALL ISOSRC(ISO(I),NISO(I),*900)
      K=NISO(I)
      EPEAK(I)=EISO(1,K)
      EL(I)=ELIM(1,K)
  250 ER(I)=ELIM(2,K)
      K1=NISO(1)
      XCHN=(EISO(1,K1)-EBASE(ND,ICAD,NSYS))/ERES(ND,ICAD,NSYS)
      NCHN(1,ND)=XCHN+.5
      DO 300 I=2,NUMISO
      K=NISO(I)
      XDIFF=(EISO(1,K1)-EISO(1,K))/ERES(ND,ICAD,NSYS)
      IF(XDIFF.LT.0.) NDIFF(I)=XDIFF-.5
      IF(XDIFF.GE.0.) NDIFF(I)=XDIFF+.5
  300 NCAL(I,ND)=NCHN(1,ND)-NDIFF(I)
      NCAL(1,ND)=NCHN(1,ND)
      CALL PEAK(NCHN(1,ND),CNTS(1,ND))
      L=NCHN(1,ND)
      PKFLAG(L,ND)=1H<
      DO 320 I=2,NUMISO
  320 NCHN(I,ND)=NCHN(1,ND)-NDIFF(I)
      DO 340 I=2,NUMISO
      ICHN=LCHN=NCHN(I,ND)
```

```
      CALL PEAK(LCHN,CNTS(1,ND))
C     GOTO 330
C     IF(LCHN.EQ.NCHN(I,ND)) GOTO 330
C     CLIM=3
C
C        THE NEXT LINE OF CODE CHECKS TO SEE IF THE SAMPLE PEAK
C        IS MORE THAN 3 CHANNELS FROM THE CALIBRATION PEAK.  IF
C        IT IS, THEN USE THE CALIBRATION PEAK.  JOHN DECIDED TO
C        USE THE SAMPLE PEAK ALWAYS.
C
C     IF((CNTS(ICHN,ND)-CNTS(LCHN,ND)).LT.CLIM) GOTO 330
C 330 CONTINUE
      NCHN(I,ND)=LCHN
      L=NCHN(I,ND)
      PKFLAG(L,ND)=1H<
  340 CONTINUE
      DO 350 I=1,NUMISO
      K=NISO(I)
      NL(I)=ELIM(1,K)/ERES(ND,ICAD,NSYS)+.5
      NR(I)=ELIM(2,K)/ERES(ND,ICAD,NSYS)+.5
      NCHNL(I,ND)=NCHN(I,ND)-NL(I)
      NCHNR(I,ND)=NCHN(I,ND)+NR(I)
      IL=NCHNL(I,ND)
      IR=NCHNR(I,ND)
      PKFLAG(IL,ND)=1H*
      PKFLAG(IR,ND)=1H*
  350 CONTINUE
      CALL INTGRT(CNTS(1,ND),NCHN(1,ND),NL,NR,CSUM(1,ND),NUMISO)
  400 CONTINUE
      CALL PRTRAW(CNTS,IDET,ICHAN,TMIN,NAMSYS,IDATE,NUMISO,PKFLAG)
      CALL AVGBKG(CNTS,IDET,ICHAN,EPEAK,EL,ER,ERR,BSUM)
      DO 500 ND=1,IDET
      REC(ND)=(CSUM(1,ND)/TMIN-BSUM(1,ND))/AVEFF(ND,NSYS)/SPLEV
      DO 450 I=2,NUMISO
      IF(REC(ND).GE..1) THEN
         DPM(I,ND)=(CSUM(I,ND)/TMIN-BSUM(I,ND))/AVEFF(ND,NSYS)/REC(ND)
      ELSE
         DPM(I,ND)=(CSUM(I,ND)/TMIN-BSUM(I,ND))/AVEFF(ND,NSYS)
      ENDIF
  450 CONTINUE
  500 CONTINUE
      CALL ERROR(TMIN,IDET,ICHAN,SPLEV)
      CALL PRTRES(IDET,ICHAN,TMIN,SPLEV,ISOTYP)
  900 RETURN
C
  600 IF(EOF(11).NE.0) GOTO 101
C
      END
      SUBROUTINE FINDCA(ICAD)
C
C   SEARCH FOR CALIBRATION DATA THAT IS CLOSEST TO DATE OF SAMPLE
C      DATA BUT IS ALSO EARLIER THAN SAMPLE DATA DATE
C
      COMMON /C1/ ISOIND(201),IUNIT,EISO(10,200),ELIM(2,200)
      COMMON /C2/ INDSYS(20),ISUNIT,NDET(2,20),EBASE(16,10,20)
      COMMON /C3/ ERES(16,10,20),CLEFF(16,20),AVEFF(16,20),NDATE(10,20)
      COMMON /C4/ INDEX(502),INDBKG(1001),NAMSYS,NSYS,IDATE,TBAK
      COMMON /C5/ INDEXC(502),INDCLB(1001),NUMISO
      COMMON /SDATA1/ NTISS(16),WETWGT(16),WTAN(16),WT(16)
      COMMON /SDATA2/ SETNO(16),BOOK(16),PAGE(16)
      ICAD=1
      MAX=0
      DO 100 I=1,10
      IF(NDATE(I,NSYS).EQ.0) GOTO 100
      ICAD=I
      IF(IDATE.LT.NDATE(I,NSYS)) GOTO 100
      IF(IDATE.EQ.NDATE(I,NSYS)) GOTO 200
      IF(MAX.GE.NDATE(I,NSYS)) GOTO 100
      MAX=NDATE(I,NSYS)
      MAXI=I
  100 CONTINUE
      IF(MAX.EQ.0) GOTO 300
      ICAD=MAXI
 1000 FORMAT('  CALIBRATION DATA USED IS DATED ',I8)
  200 PRINT 1000,NDATE(ICAD,NSYS)
      RETURN
  300 MIN=99999999
      DO 350 I=1,10
      IF(NDATE(I,NSYS).EQ.0) GOTO 350
      IF(MIN.LE.NDATE(I,NSYS)) GOTO 350
```

```
      MIN=NDATE(I,NSYS)
      ICAD=I
  350 CONTINUE
      GOTO 200
      END
      SUBROUTINE PRTRAW(CNTS,IDET,ICHAN,TMIN,NAMSYS,IDATE,NUMISO,PKFLAG)
      DIMENSION CNTS(ICHAN,IDET),ICNTS(16),PKFLAG(ICHAN,IDET),CT16(16)
      COMMON /PRT1/ NCAL(5,16),REC(16),DPM(5,16),ID(8),ISO(5)
      COMMON /PRT2/ NCHNL(5,16),NCHNR(5,16),NCHN(5,16),RECMIN,RECMAX
      COMMON /PRT3/ERRL(5,16),ERRU(5,16),ERR(5,16),CSUM(5,16),BSUM(5,16)
      INTEGER CT16
      DATA CT16 /16*0/
C
      WRITE (8,999) (ID(I),I=1,8)
  999 FORMAT (8A10)
      WRITE(8,1000)NAMSYS,IDATE
 1000 FORMAT('THIS DATA COLLECTED ON ',A8,' SYSTEM ON DATE ',I8)
      CALL DATE(JDATE)
      WRITE(8,1001)JDATE,TMIN
 1001 FORMAT(' COMPUTER RUN DATE ',A10,' COUNT TIME IS ',F6.1,' MINS')
      WRITE(8,1002)(I,I=1,IDET)
 1002 FORMAT(' DET',16I7)
      DO 100 I=1,ICHAN
      DO 90 ND=1,IDET
   90 ICNTS(ND)=CNTS(I,ND)
      WRITE(8,1003) I,(ICNTS(ND), PKFLAG(I,ND), ND=1,IDET)
 1003 FORMAT(I5,1X,16(I6,A1))
  100 CONTINUE
C
C   CALCULATE AND PRINT TOTAL COUNTS/DETECTOR
C
      DO 10 J=1,IDET
        DO 10 I=1,ICHAN
   10 CT16(J)=CT16(J) + INT(CNTS(I,J))
C       SUBTRACT THE FIRST 2 CHANNEL TIME COUNTS
C       FROM FIRST DETECTOR TOTAL COUNTS
      CT16(1) = CT16(1) - CNTS(1,1) - CNTS(2,1)
      WRITE(8,1006)(CT16(I),I=1,16)
 1006 FORMAT ('TOTAL',16I7,/)
      WRITE(8,1004) (ISO(J),J=1,3)
 1004 FORMAT('DET NO.',3(10X,A5,10X)/9X,
     C          3('PEAK',2X,'LEFT',1X,'RIGHT',1X,'COUNTS',2X))
      DO 200 ND=1,IDET
  200 WRITE(8,1005) ND,(NCHN(I,ND),NCHNL(I,ND),NCHNR(I,ND),
     C        CSUM(I,ND),I=1,NUMISO)
 1005 FORMAT(I6,3(3I6,F7.0))
      RETURN
      END
      SUBROUTINE PRTRES(IDET,ICHAN,TMIN,SPLEV,ISOTYP)
      COMMON /C1/ ISOIND(201),IUNIT,EISO(10,200),ELIM(2,200)
      COMMON /C2/ INDSYS(20),ISUNIT,NDET(2,20),EBASE(16,10,20)
      COMMON /C3/ ERES(16,10,20),CLEFF(16,20),AVEFF(16,20),NDATE(10,20)
      COMMON /C4/ INDEX(502),INDBKG(1001),NAMSYS,NSYS,IDATE,TBAK
      COMMON /C5/ INDEXC(502),INDCLB(1001),NUMISO
      COMMON /SDATA1/ NTISS(16),WETWGT(16),WTAN(16),WT(16)
      COMMON /SDATA2/ SETNO(16),BOOK(16),PAGE(16)
      COMMON /PRT1/ NCAL(5,16),REC(16),DPM(5,16),ID(8),ISO(5)
      COMMON /PRT2/ NCHNL(5,16),NCHNR(5,16),NCHN(5,16),RECMIN,RECMAX
      COMMON /PRT3/ERRL(5,16),ERRU(5,16),ERR(5,16),CSUM(5,16),BSUM(5,16)
      DIMENSION TISS(640)
      INTEGER PAGE
C
      DATA (TISS(I),I=1,40)/
     110HLIVER      ,10HLUNG       ,10HLUNG-R     ,10HLUNG-L     ,
     210HLUNG PAREM,10HPLEURA      ,10HMEDSTI TIS,10HLUNG-FLUID,
     310HBRON. TREE,10HLARYNX      ,10HEPIGLOTTIS,10HTRACHEA    ,
     410HTRAC SCRAP,10HLYMPH NODE,10HTBLN        ,10HTBLN #1    ,
     510HTBLN #2    ,10HTBLN #3    ,10HTBLN #4    ,10HLN-HILAR   ,
     610HLN-HILAR L,10HLN-HILAR R,10HLN-MEDSTI.,10HLN-PULMON.,
     710HLN-THORACI,10HLN-ABDOM.  ,10HLN-PERIPTL,10HKIDNEY     ,
     810HKIDNEY-R   ,10HKIDNEY-L   ,10HFAT R-KID ,10HFAT L-KID ,
     910HPERIHEPAT ,10HADRENALS   ,10HADRENAL-R ,10HADRENAL-L ,
     X10HTUMOR      ,10HHEART      ,10HPERICARD   ,10HAORTA      /
      DATA (TISS(I),I=41,80)/
     110HAORT ARCH ,10HDESC AORTA,10HCAROTID AR,10HBLOOD      ,
     210HBLOOD-LIVR,10HPANCREAS   ,10HSPLEEN     ,10HESOPHAGUS ,
     310HDIAPHRAGM ,10HSTOMACH    ,10HSTMCH CONT,10HGALL BLADR,
     410HGALL STONE,10HBILE       ,10HDUODENUM   ,10HDUOD CHYME,
     510HJEJUNUM    ,10HGI TRACT   ,10HINTESTINE ,10HINT. CONT.,
     610HSM. INTEST,10HGI CONTENT,10HGI CHYME   ,10HILEUM      ,
```

```
710HAPPENDIX   ,10HLG. INTEST,10HASCD COLON,10HTRAN COLON,
810HDECEND COL,10HLOW LG.INT,10HFECES      ,10HOMENTUM   ,
910HMESENTERY ,10HFAT-MESENT,10HFAT-PELVIC,10HFAT-ABDOM ,
X10H           ,10H           ,10H           ,10H           /
 DATA (TISS(I),I=81,120)/
110HBLADDER    ,10HPROSTATE   ,10HGONAD      ,10HTESTES     ,
210HTESTIS-R   ,10HTESTIS-L   ,10HPERITESTIC,10HPENIS      ,
310HSCROTUM    ,10HOVARIES    ,10HOVARY-R    ,10HOVARY-L    ,
410HOVARY      ,10HUTERUS     ,10H           ,10H           ,
510HBRAIN      ,10HBRAIN FLUD,10HCEREBRUM   ,10HCEREBELLUM,
610HBRAIN STEM,10HMENINGES   ,10HPITUITARY ,10HEYES       ,
710HEYE-R      ,10HEYE-L      ,10HEYE LENS-R,10HEYE LENS-L,
810HTHYROID    ,10HHAIR       ,10HHAIR-HEAD ,10HHAIR-BODY ,
910H           ,10H           ,10H           ,10H           ,
X10H           ,10H           ,10H           ,10H           /
 DATA (TISS(I),I=121,160)/
110HSKIN       ,10HSKIN HEAD ,10HSKN-UP R A,10HSKN-R F'AR,
210HSKN-R HAND,10HSKN-UP L A,10HSKN-L F'AR,10HSKN-L HAND,
310HSKIN STERN,10H           ,10H           ,10H           ,
410HSKN THRX 1,10HSKN THRX 2,10HSKN THRX 3,10HSKN THRX 4,
510HSKN ABDO 1,10HSKN ABDO 2,10HSKN ABDO 3,10HSKN ABDO 4,
610HSKN-R THI ,10HSKN-R CALF,10HSKN-R FOOT,10HSKN-L THI ,
710HSKN-L CALF,10HSKN-L FOOT,10HMOLE       ,10HCYST       ,
810HSALV GLAND,10HSAL GLD SL,10HSAL GLD SM,10H           ,
910H           ,10H           ,10H           ,10H           ,
X10H           ,10HEARS       ,10HEAR-R      ,10HEAR-L      /
 DATA (TISS(I),I=161,200)/
110HMUSL HEAD ,10HTONGUE     ,10HMUS-R UP A,10HMUL-R F'AR,
210HMUS-R HAND,10HMUS-L UP A,10HMUL-L F'AR,10HMUS-L HAND,
310HMUS R SHLD,10HMUS L SHLD,10HMUSCLE     ,10HMUSL SCRAP,
410HMUS-THX #1,10HMUS-THX #2,10HMUS-THX #3,10HMUS-THX #4,
510HMUS-R SCAP,10HMUS-L SCAP,10HMUS-R CLAV,10HMUS-L CLAV,
610HMUS STERN ,10HMUSL-TORSO,10HMUS-LO ABD,10HMUS-R L AB,
710HMUS-L L AB,10HMUS-ABDOME,10HMUS-ABD #1,10HMUS-ABD #2,
810HMUS-ABD #3,10HMUS-ABD #4,10HMUS-R THI ,10HMUS-R CALF,
910HMUS-R FOOT,10HMUS-L THI ,10HMUS-L CALF,10HMUS-L FOOT,
X10HILIOPSOAS ,10HPSOAS-R    ,10HPSOAS-L    ,10HBODY FAT  /
 DATA (TISS(I),I=201,240)/
110HCALVARIUM ,10HFRONTAL#1 ,10HFRONTAL#2 ,10HFRONTAL#3 ,
210HPARIETAL#1,10HPARIETAL#2,10HOCCIPITAL ,10HTEMPORAL#1,
310HTEMPORAL#2,10HTEMPORAL#3,10HMAXILLA   ,10HMANDIBLE  ,
410HTEETH      ,10HINCISR RU1,10HINCISR RU2,10HCANINE RU3,
510HPREMLR RU4,10HPREMLR RU5,10HMOLAR RU6 ,10HMOLAR RU7 ,
610HMOLAR RU8 ,10HINCISR RL1,10HINCISR RL2,10HCANINE RL3,
710HPREMLR RL4,10HPREMLR RL5,10HMOLAR RL6 ,10HMOLAR RL7 ,
810HMOLAR RL8 ,10HINCISR LU1,10HINCISR LU2,10HCANINE LU3,
910HPREMLR LU4,10HPREMLR LU5,10HMOLAR LU6 ,10HMOLAR LU7 ,
X10HMOLAR LU8 ,10HINCISR LL1,10HINCISR LL2,10HCANINE LL3/
 DATA (TISS(I),I=241,280)/
110HPREMLR LL4,10HPREMLR LL5,10HMOLAR LL6 ,10HMOLAR LL7 ,
210HMOLAR LL8 ,10HHYOID      ,10H           ,10HVERTEBRAE ,
310HVERT. C-1 ,10HVERT. C-3A,10HVERT. C-3B,10HVERT. C-5A,
410HVERT. C-5B,10HVERT. C-7A,10HVERT. C-7B,10HVERT. T-1A,
510HVERT. T-1B,10HVERT. T-3A,10HVERT. T-3B,10HVERT. T-5A,
610HVERT. T-5B,10HVERT. T-7A,10HVERT. T-7B,10HVERT. T-8A,
710HVERT. T-8B,10HVERT. T-9A,10HVERT. T-9B,10HVERT T-11A,
810HVERT T-11B,10HVERT. L-1A,10HVERT. L-1B,10HVERT. L-3A,
910HVERT. L-3B,10HVERT. L-5A,10HVERT. L-5B,10H           ,
X10HVERT. C-2 ,10HVERT. C-2A,10HVERT. C-2B,10HVERT. C-4 /
 DATA (TISS(I),I=281,320)/
110HVERT. C-4A,10HVERT. C-4B,10HVERT. C-6 ,10HVERT. C-6A,
210HVERT. C-6B,10HVERT. T-2 ,10HVERT. T-2A,10HVERT. T-2B,
310HVERT. T-4 ,10HVERT. T-4A,10HVERT. T-4B,10HVERT. T-6 ,
410HVERT. T-6A,10HVERT. T-6B,10HVERT. T-8 ,10HVERT. T-8A,
510HVERT. T-8B,10HVERT. T-10,10HVERT T-10A,10HVERT T-10B,
610HVERT T-12 ,10HVERT T-12A,10HVERT T-12B,10HVERT. L-2 ,
710HVERT. L-2A,10HVERT. L-2B,10HVERT. L-4 ,10HVERT. L-4A,
810HVERT. L-4B,10HPELVIS     ,10HILIUM      ,10HILIUM CRST,
910HILIUM BODY,10HISCHIUM    ,10HPELV FLUID,10HSACRUM     ,
X10HCOCCYX     ,10HSPINAL CRD,10H           ,10H           /
 DATA (TISS(I),I=321,360)/
110H           ,10H           ,10HRIB        ,10HRIB#1 SE   ,
210HRIB#1 MS   ,10HRIB#1 VE   ,10HRIB#2 SE   ,10HRIB#2 MS   ,
310HRIB#2 VE   ,10HRIB#3 SE   ,10HRIB#3 MS   ,10HRIB#3 VE   ,
410HRIB#4 SE   ,10HRIB#4 MS   ,10HRIB#4 VE   ,10HRIB#5 SE   ,
510HRIB#5 MS   ,10HRIB#5 VE   ,10HRIB#6 SE   ,10HRIB#6 MS   ,
610HRIB#6 VE   ,10HRIB#7 SE   ,10HRIB#7 MS   ,10HRIB#7 VE   ,
710HRIB#8 SE   ,10HRIB#8 MS   ,10HRIB#8 VE   ,10HRIB#9 SE   ,
810HRIB#9 MS   ,10HRIB#9 VE   ,10HRIB#10 SE  ,10HRIB#10 MS  ,
910HRIB#10 VE  ,10HRIB#11 SE  ,10HRIB#11 MS  ,10HRIB#11 VE  ,
```

```
X10HRIB#12 SE ,10HRIB#12 MS ,10HRIB#12 VE ,10H
 DATA (TISS(I),I=361,400)/
110HR-RIB #1  ,10HR-RIB #2  ,10HR-RIB #3  ,10HR-RIB #4  ,
210HR-RIB #5  ,10HR-RIB #6  ,10HR-RIB #7  ,10HR-RIB #8  ,
310HR-RIB #9  ,10HR-RIB #10 ,10HR-RIB #11 ,10HR-RIB #12 ,
410HL-RIB #1  ,10HL-RIB #2  ,10HL-RIB #3  ,10HL-RIB #4  ,
510HL-RIB #5  ,10HL-RIB #6  ,10HL-RIB #7  ,10HL-RIB #8  ,
610HL-RIB #9  ,10HL-RIB #10 ,10HL-RIB #11 ,10HL-RIB #12 ,
710HCARTILAGE ,10HCOSTAL CAR,10HCOS CAR-R ,10HCOS CAR-L ,
810HCOS CAR R1,10HCOS CAR R2,10HCOS CAR R3,10HCOS CAR R4,
910HCOS CAR R5,10HCOS CAR R6,10HCOS CAR R7,10HCOS CAR R8,
X10HCOS CAR R9,10HCOS CAR 10,10HCOS CAR 11,10HCOS CAR 12/
 DATA (TISS(I),I=401,440)/
110HNASAL CART,10H          ,10H          ,10H          ,
210H          ,10H          ,10H          ,10HSTERNUM   ,
310HSTERN BODY,10HSTR BODY 1,10HSTR BODY 2,10HHUMERUS PE,
410HHUMERUS PS,10HHUMERUS DS,10HHUMERUS DE,10HRADIUS PE ,
510HRADIUS PS ,10HRADIUS DS ,10HRADIUS DE ,10HULNA PE   ,
610HULNA PS   ,10HULNA DS   ,10HULNA DE   ,10HSCAPHOID  ,
710HLUNATE    ,10HTRIANGILAR,10HPISIFORM  ,10HHAMATE   ,
810HCAPITATE  ,10HTRAPEZOIDE,10HTRAPEZIUM ,10HMETACARP#1,
910HMETACARP#2,10HMETACARP#3,10HMETACARP#4,10HMETACARP#5,
X10HPHALAN P-1,10HPHALAN P-2,10HPHALAN P-3,10HPHALAN P-4/
 DATA (TISS(I),I=441,480)/
110HPHALAN P-5,10HPHALAN M-2,10HPHALAN M-3,10HPHALAN M-4,
210HPHALAN M-5,10HPHALAN D-1,10HPHALAN D-2,10HPHALAN D-3,
310HPHALAN D-4,10HPHALAN D-5,10HFINGERNAIL,10HSESAMOID-H,
410HCLAVICL SE,10HCLAV SHAFT,10HCLAV ACROM,10HCLAVICLE  ,
510HSCAPULA PE,10HSCAP SPINE,10HSCAPULA DE,10HSCAP #1   ,
610HSCAP #2   ,10HSCAP #3   ,10HSCAP #4   ,10HSCAP #5   ,
710HSCAP #6   ,10H          ,10H          ,10H          ,
810HFEMUR     ,10HFEMUR PE  ,10HFEMUR PS  ,10HFEMUR MS  ,
910HFEMUR DS  ,10HFEMUR DE  ,10HPATELLA   ,10HPATELLA-R ,
X10HPATELLA-L ,10H          ,10H          ,10HFIBULA PE /
 DATA (TISS(I),I=481,520)/
110HFIBULA PS ,10HFIBULA MS ,10HFIBULA DS ,10HFIBULA DE ,
210HTIBIA PE  ,10HTIBIA PS  ,10HTIBIA MS  ,10HTIBIA DS  ,
310HTIBIA DE  ,10HTALUS     ,10HCALCANEUS ,10HCUBOID    ,
410HNAVICULAR ,10HM CUNEIFOR,10HI CUNEIFOR,10HL CUNEIFOR,
510HMETATARS#1,10HMETATARS#2,10HMETATARS#3,10HMETATARS#4,
610HMETATARS#5,10HFT PHA P-1,10HFT PHA P-2,10HFT PHA P-3,
710HFT PHA P-4,10HFT PHA P-5,10HFT PHA M-2,10HFT PHA M-3,
810HFT PHA M-4,10HFT PHA M-5,10HFT PHA D-1,10HFT PHA D-2,
910HFT PHA D-3,10HFT PHA D-4,10HFT PHA D-5,10HTOENAILS  ,
X10HSESAMOID-F,10H          ,10H          ,10H          /
 DATA (TISS(I),I=521,560)/
110HFETUS     ,10HFETL PARTS,10HFETAL HEAD,10HFETAL BODY,
210HPLACENTA  ,10HUMBIL CORD,10H          ,10H          ,
310HFILTER    ,10HFILTER-LNG,10HFILTER-LIV,10HFILTER-BON,
410H          ,10H          ,10H          ,10H          ,
510HRIB-L1 BON,10HRIB-L1 MAR,10HRIB-L2 BON,10HRIB-L2 MAR,
610HRIB-L3 BON,10HRIB-L3 MAR,10HRIB-L4 BON,10HRIB-L4 MAR,
710HRIB-L5 BON,10HRIB-L5 MAR,10HRIB-L6 BON,10HRIB-L6 MAR,
810HRIB-L7 BON,10HRIB-L7 MAR,10HRIB-L8 BON,10HRIB-L8 MAR,
910HRIB-L9 BON,10HRIB-L9 MAR,10HRIB-L10 BN,10HRIB-L10 BN,
X10HRIB-L11 BN,10HRIB-L11 MA,10HRIB-L12 BN,10HRIB-L12 MA/
 DATA (TISS(I),I=561,600)/
110HVRTC-2A BN,10HVRTC-2A MA,10HVRTC-2B BN,10HVRTC-2B MA,
210HVRTC-4A BN,10HVRTC-4A MA,10HVRTC-4B BN,10HVRTC-4B MA,
310HVRTC-6A BN,10HVRTC-6A MA,10HVRTC-6B BN,10HVRTC-6B MA,
410HVRTT-2A BN,10HVRTT-2A MA,10HVRTT-2B BN,10HVRTT-2B MA,
510HVRTT-4A BN,10HVRT7-4A MA,10HVETT-4B BN,10HVRTT-4B MA,
610HVRTT-6A BN,10HVRTT-6A MA,10HVRTT-6B BN,10HVRTT-6B MA,
710HVRTT-8A BN,10HVRTT-8A MA,10HVRTT-8B BN,10HVRTT-8B MA,
810HVRTT-10A B,10HVRTT-10A M,10HVRTT-10B B,10HVRTT-10B M,
910HVRTT-12A B,10HVRTT-12A M,10HVRTT-12B B,10HVRTT-12B M,
X10HVRTL-2A BN,10HVRTL-2A MA,10HVRTL-2B BN,10HVRTL-2B MA/
 DATA (TISS(I),I=601,640)/
110HVRTL-4A BN,10HVRTL-4A MA,10HVRTL-4B BN,10HVRTL-4B MA,
210HFMR SH-1 B,10HFMR SH-1 M,10HFMR SH-2 B,10HFMR SH-2 M,
310HFMR SH-3 B,10HFMR SH-3 M,10HFMR SH-4 B,10HFMR SH-4 M,
410HFMR PE#1 B,10HFMR PE#1 M,10HFMR PE#2 B,10HFMR PE#2 M,
510HFMR PE#3 B,10HFMR PE#3 M,10HFMR DE#1 B,10HFMR DE#1 M,
610HFMR DE#2 B,10HFMR DE#2 M,10HFMR DE#3 B,10HFMR DE#3 M,
710HFMR DE#4 B,10HFMR DE#4 M,10H          ,10H          ,
810H          ,10H          ,10H          ,10H          ,
910H          ,10H          ,10H          ,10H          ,
X10H          ,10HBODY FLUID,10HQC        ,10HBLANK     /
C
 WRITE(8,1000) (ID(I),I=1,8)
```

```
  200 WRITE(8,1002) ISO(2),ISO(3),ISO(1)

      DO 210 I=1,IDET
      IT=NTISS(I)
      IF(IT.EQ.0) IT=640
      WRITE(8,1004)I,BOOK(I),PAGE(I),TISS(IT),WETWGT(I),WT(I),WTAN(I),
     C  (DPM(J,I),ERR(J,I),ERRL(J,I),ERRU(J,I),J=2,3),REC(I)
  210 CONTINUE
      IF(NUMISO.LE.3) GOTO 205
      WRITE(8,1002) ISO(4),ISO(5),ISO(1)
      DO 208 I=1,IDET
      IT=NTISS(I)
      IF(IT.EQ.0) IT=640
  208 WRITE(8,1004)I,BOOK(I),PAGE(I),TISS(IT),WETWGT(I),WT(I),WTAN(I),
     C  (DPM(J,I),ERR(J,I),ERRL(J,I),ERRU(J,I),J=4,5),REC(I)
  205 WRITE(8,1000) (ID(I),I=1,8)
      CALL DATE(JDATE)
      WRITE(8,1001) JDATE,TMIN
      WRITE(8,1003) ISO(1),ISO(2),ISO(3)
      DO 220 I=1,IDET
      DO 202 L=1,NUMISO
  202 BSUM(L,I)=BSUM(L,I)*TMIN
      IT=NTISS(I)
      IF(IT.EQ.0) IT=640
      WRITE(8,1005) I,BOOK(I),PAGE(I),TISS(IT),NCAL(1,I),NCHN(1,I),
     C  BSUM(1,I),CSUM(1,I),REC(I),NCAL(2,I),NCHN(2,I),BSUM(2,I),
     C  CSUM(2,I),NCAL(3,I),NCHN(3,I),BSUM(3,I),CSUM(3,I),AVEFF(I,NSYS)
  220 CONTINUE
      WRITE(8,1006) SPLEV
      IF(NUMISO.LE.3) GOTO 260
      WRITE(8,1003) ISO(1),ISO(4),ISO(5)
      DO 250 I=1,IDET
      IT=NTISS(I)
      IF(IT.EQ.0) IT=640
      WRITE(8,1005) I,BOOK(I),PAGE(I),TISS(IT),NCAL(1,I),NCHN(1,I),
     C  BSUM(1,I),CSUM(1,I),REC(I),NCAL(4,I),NCHN(4,I),BSUM(4,I),
     C  CSUM(4,I),NCAL(5,I),NCHN(5,I),BSUM(5,I),CSUM(5,I),AVEFF(I,NSYS)
  250 CONTINUE
      WRITE(8,1006) SPLEV
  260 CONTINUE
      IF (ISOTYP.EQ.2HPU) THEN
        K=88
        OPEN (UNIT=90,IOSTAT=IOS,ERR=888,FILE='TAPE90',STATUS='OLD',
     C              RECL=80)
        OPEN (UNIT=91,IOSTAT=IOS,ERR=889,FILE='TAPE91',STATUS='OLD',
     C               RECL=80)
      ELSE IF (ISOTYP.EQ.2HAM) THEN
        K=90
        OPEN (UNIT=92,IOSTAT=IOS,ERR=890,FILE='TAPE92',STATUS='OLD',
     C              RECL=80)
      ELSE
        RETURN
      ENDIF
      DO 320 J=2,NUMISO
      IUNIT=K+J
      DO 310 I=1,IDET
      IF(REC(I).LT.RECMIN.OR.REC(I).GT.RECMAX) GOTO 310
C     IF(NTISS(I).EQ.43.OR.NTISS(I).EQ.52) GOTO 310
C     IF(NTISS(I).EQ.53.OR.NTISS(I).EQ.56) GOTO 310
C     IF(NTISS(I).EQ.313.OR.NTISS(I).EQ.317) GOTO 310
C     IF(NTISS(I).EQ.318.OR.NTISS(I).EQ.319) GOTO 310
      IF (IUNIT.EQ.90) PAGE(I) = PAGE(I) + 1
      IF (IUNIT.EQ.92) PAGE(I) = PAGE(I) + 3
      WRITE(IUNIT,1010) BOOK(I),PAGE(I),NTISS(I),DPM(J,I),ERR(J,I),
     C  WETWGT(I),WTAN(I),WT(I),REC(I),SETNO(I)
 1010 FORMAT(A6,I3,1X,I3,5(OPF10.3),2PF10.3,2X,A5)
  310 CONTINUE
  320 CONTINUE
      RETURN
 1000 FORMAT (////,8A10)
 1001 FORMAT      (' COMPUTER RUN DATE ',A10,' COUNT LENGTH = ',F9.2,' MI
     1NUTES = T',/,'  CALIBRATED WITH HAL''S 16 STDS, 242,239PU, 241AM 1
     2434  +-15 D/M  1/1/82 242PU = 407 D/M OR 94% OF 242PU COUNTS'/)
 1002 FORMAT(63X,A5,30X,A5/' DET LAB NO.  TISSUE',
     1'     WET WGT    WEIGHT     WEIGHT',4X,'SAMPLE',3X,'STANDARD',6X,'RAN
     2GE',8X,'SAMPLE',2X,'STANDARD',5X,'RANGE',11X,A5/' NO.',10X,'SAMPLE
     3     TISSUE    SOLUTION  ANALYZED    D/M      DEVIATION    PLUS-MINUS
     4      D/M    DEVIATION  PLUS-MINUS          PERCENT'/22X,'  (GRAM)
     5  (G)        (G)',    16X,'D/M          TWO S.D.',16X,'D/M        TWO S
     6.D.','        RECOVERY')
```

```
 1004 FORMAT(I2,1X,A6,I3,2X,A10,F7.2,2F9.2,F9.3,F10.4,2X,F7.3,1X,1H/,
     1F6.3,2X,F8.3,F8.4,3X,F6.3,1X,1H/,F6.3,3X,2PF8.2)
 1003 FORMAT(40X,A10,20X,A10,20X,A10/
     C '0 DET LAB NO.  TISSUE',
     1 10X,' PEAK    AVE   TOTAL  RECOVERY',
     C 2(5X,'PEAK     AVE    TOTAL  '),5X,'DET'/
     2'  NO.',10X,'SAMPLE',9X,'CHANNEL',3X,'BKG',3X,'SAMPLE',2X,'SPIKE',
     3 4X,' CHANNEL',4X,'BKG',4X,'SAMPLE',4X,' CHANNEL',3X,'BKG',
     C 4X,'SAMPLE',6X,'EFF'/
     4 30X,'CAL-SMP',3X,'CNTS',4X,'CNTS',3X,'PRCNT',
     5 5X,'CAL-SMP',4X,'CNTS',3X,'CNTS',6X,'CAL-SMP',3X,'CNTS',
     6 4X,'CNTS',7X,'CNTS')
 1005 FORMAT(I2,1X,A6,I3,1X,A10,4X,I4,'-',I4,1X,F6.1,2X,F5.0,2PF8.2,
     1  2(4X,I4,'-',I4,2X,OPF5.2,2X,OPF6.0),5X,F7.5)
 1006 FORMAT(//,10X,'SPIKE LEVEL = ',F7.4)
C
  888 PRINT 8888, IOS
 8888 FORMAT ('OPEN TAPE90 FAILED WITH IOS= ',I4)
      RETURN
  889 PRINT 8889, IOS
 8889 FORMAT ('OPEN TAPE91 FAILED WITH IOS= ',I4)
      RETURN
  890 PRINT 8890, IOS
 8890 FORMAT ('OPEN TAPE92 FAILED WITH IOS= ',I4)
      RETURN
      END
      SUBROUTINE ERROR(TMIN,IDET,ICHAN,SPLEV)
C
C       CALCULATE PROPAGATION OF ERROR
C
      COMMON /C1/ ISOIND(201),IUNIT,EISO(10,200),ELIM(2,200)
      COMMON /C2/ INDSYS(20),ISUNIT,NDET(2,20),EBASE(16,10,20)
      COMMON /C3/ ERES(16,10,20),CLEFF(16,20),AVEFF(16,20),NDATE(10,20)
      COMMON /C4/ INDEX(502),INDBKG(1001),NAMSYS,NSYS,IDATE,TBAK
      COMMON /C5/ INDEXC(502),INDCLB(1001),NUMISO
      COMMON /SDATA1/ NTISS(16),WETWGT(16),WTAN(16),WT(16)
      COMMON /SDATA2/ SETNO(16),BOOK(16),PAGE(16)
      COMMON /PRT1/ NCAL(5,16),REC(16),DPM(5,16),ID(8),ISO(5)
      COMMON /PRT2/ NCHNL(5,16),NCHNR(5,16),NCHN(5,16),RECMIN,RECMAX
      COMMON /PRT3/ERRL(5,16),ERRU(5,16),ERR(5,16),CSUM(5,16),BSUM(5,16)
      F=.02
      DO 300 ND=1,IDET
      DO 100 I=2,NUMISO
      ERR2=0.
      IF(REC(ND).LT..1) GOTO 60
      CMBS=CSUM(1,ND)-BSUM(1,ND)*TMIN
      CMBX=CSUM(I,ND)-BSUM(I,ND)*TMIN
      CPBS=CSUM(1,ND)+BSUM(1,ND)*TMIN
      CPBX=CSUM(I,ND)+BSUM(I,ND)*TMIN
      IF(CMBS.EQ.0.) GOTO 50
      X1=SPLEV*SPLEV/CMBS/CMBS
      X2=F*F+CPBS/CMBS/CMBS
      ERR2=X1*(X2*CMBX*CMBX+CPBX)
      IF(ERR2.LT.0.) ERR2=0
   50 ERR(I,ND)=SQRT(ERR2)
      GOTO 70
   60 CMBX=CSUM(I,ND)-BSUM(I,ND)*TMIN
      CPBX=CSUM(I,ND)+BSUM(I,ND)*TMIN
      E=AVEFF(ND,NSYS)
      SIGE=CLEFF(ND,NSYS)/3.
      ERR2=CPBX+CMBX*CMBX*SIGE*SIGE/E/E
      ERR(I,ND)=SQRT(ERR2)/E/TMIN
   70 ERRU(I,ND)=DPM(I,ND)+ERR(I,ND)*2.
      ERRL(I,ND)=DPM(I,ND)-ERR(I,ND)*2.
  100 CONTINUE
  300 CONTINUE
      RETURN
      END
      SUBROUTINE ASKISO(ISO,NUMISO,ISOTYP)
C
C     ASK USER FOR ISOTOPE TYPE TO BE USED IN SA^
C     IF TYPE IS UNKNOWN, ASK USER FOR TRACER, NO. OF ISTOPES AND
C     REMAINING ISOTOPES
C
      DIMENSION ISO(3)
      DO 10 I=1,5
   10 ISO(I)=5H
  101 PRINT 1000
 1000 FORMAT('  INPUT ISOTOPE TYPE')
      READ (11,1001,END=500) ISOTYP
```

```
 1001 FORMAT(A2)
      IF(ISOTYP.NE.2HPU) GOTO 50
      NUMISO=3
      ISO(1)=5HPU242
      ISO(2)=5HPU238
      ISO(3)=5HPU239
      RETURN
C
  500 IF(EOF(11).NE.0) GOTO 101
  501 IF(EOF(11).NE.0) GOTO 102
  502 IF(EOF(11).NE.0) GOTO 103
  503 IF(EOF(11).NE.0) GOTO 99
C
   50 IF(ISOTYP.NE.2HAM) GOTO 60
      NUMISO=2
      ISO(1)=5HAM243
      ISO(2)=5HAM241
      ISO(3)=5H
      RETURN
   60 PRINT 1002
 1002 FORMAT(' ISOTOPE TYPE NOT IN DATA FILES')
  102 PRINT 1003
 1003 FORMAT(' TYPE IN TRACER ISOTOPE')
      READ (11,1004,END=501) ISO(1)
 1004 FORMAT(A5)
  103 PRINT 1005
 1005 FORMAT(' TYPE IN NUMBER OF ISOTOPES (INCLUDING TRACER)')
  100 READ (11,1001,END=502) NUMISO
      IF(NUMISO.LE.5) GOTO 110
      PRINT 1008
 1008 FORMAT(' NUMBER OF ISOTOPES MAY NOT EXCEED 5')
      GOTO 100
  110 PRINT 1007
 1007 FORMAT(' TYPE IN REMAINING ISOTOPE NAMES (EACH FOLLOWED BY CR)')
      DO 900 I=2,NUMISO
   99 CONTINUE
  900 READ (11,1004,END=503) ISO(I)
      RETURN
      END
      SUBROUTINE DOCUM
C   PURPOSE - THIS PROGRAM ANALYZES ALPHA PARTICLE ENERGY SPECTRA
C             FROM RADIOACTIVE TISSUE SAMPLES
C
C   LAYOUT - THE PROGRAM IS MENU DRIVEN. IT HAS 5 FUNCTIONS
C            EACH PROCESSED BY A SEPARATE SUBROUTINE CALL IN THE
C            MAIN PROGRAM.
C
C           FUNCTION 1 - UPDATE THE ISOTOPE LIBRARY.
C                      A. ADD ENTRIES
C                      B. DELETE ENTRIES
C                      C. LIST ALL ENTRIES
C                      D. INITIALZE LIBRARY
C
C           FUNCTION 2 - UPDATE THE SYSTEM LIBRARY.
C                      A. ADD ENTRIES
C                      B. DELETE ENTRIES
C                      C. LIST ENTRIES
C                      D. INITIALIZE
C
C           FUNCTION 3 - UPDATE BACKGROUND LIBRARY
C                      - THIS LIBRARY CONTAINS THE TEN MOST RECENT
C                        DATA SETS FOR EACH DETECTOR SYSTEM
C                      A. ADD DATA SETS TO LIBRARY
C                      B. DELETE DATA SETS
C                      C. LIST DATA SET IDENTIFIERS AND/OR COMPLETE
C                           DATA SET
C                      D. INITIALIZE
C                      E. CALCULATE INTEGRATED BACKGROUND COUNTS,
C                           AVERAGE OVER ALL DECKS AND PRINT OUT
C
C           FUNCTION 4 - UPDATE CALIBRATION LIBRARY AND RUN
C                          CALIBRATION CALCULATIONS
C                      A. ADD DATA SETS
C                      B. DELETE DATA SETS
C                      C. LIST DATA SET IDENTIFIERS AND/OR COMPLETE
C                          DATA SET
C                      D. INITIALIZE
C                      E. RUN CALIBRATION CALCULATIONS FOR A PARTICULAR
C                          DETECTOR SYSTEM. THIS OPTION TAKES ALL DATA
C                          SETS THAT ARE IN THE LIBRARY UNDER A GIVEN
```

```
C                           SYSTEM AND USES THEM TO CALIBRATE THE
C                           DETECTOR CHANNELS IN A LINEAR MANNER.
C                           PARAMETERS CALCULATED ARE: CHANNEL O ENERGY,
C                           CHANNEL RESOLUTION, DETECTOR EFFICIENCY AND
C                           CONTROL LIMITS (3* STD DEV) AVERAGED OVER ALL
C                            DATA DECKS. INDIVIDUAL DETECTOR EFFICIENCIES
C                           ARE CHECKED AGAINST THE PRIOR CONTROL LIMITS
C                           AND FLAGGED IF OUTSIDE LIMITS. RESULTS ARE THEN
C                            STORED IN THE DETECTOR SYSTEM LIBRARY.
C
C                 FUNCTION 5. - RUN CALCULATIONS ON TISSUE SAMPLE
C                           A. THERE ARE NO OPTIONS UNDER THIS FUNCTION
C                              THE CALCULATIONS ARE RUN USING CALIBRATION
C                              DATA STORED IN THE DETECTOR SYSTEM LIBRARY.
C                              BACKGROUND AVERAGES ARE SUBTRACTED OUT OF
C                              THE SAMPLE DATA. THE BACKGROUND AVERAGES
C                              ARE AVERAGED OVER ALL DATA SETS IN THE
C                              BACKGROUND LIBRARY FOR THE APPROPRIATE
C                              DETECTOR SYSTEM.
C
C    SPECIAL PROGRAMMING CONSIDERATIONS:
C          FILE DEFINITIONS - STANDARD FTN FILES ARE DEFINED IN MAIN PROGRAM
C          RECORD MANAGER USE - THIS PROGRAM USES EXPLICIT RECORD MANAGER
C                   CALLS TO READ INPUT FILES CONTAINING CALIBRATION,
C                   BACKGROUND, AND SAMPLE COUNTS. THIS WAS DONE SO THAT
C                   THE FILE NAMES COULD BE CHANGED AT EXECUTION TIME. THE
C                   USER IS ASKED FOR THE FILE NAME CONTAINING THE DATA.
C                   THIS FILE NAME IS THEN STORED IN THE RECORD MANAGER FIT.
C          READMS AND WRITMS USE - THIS PROGRAM USES THE INDEXED SEQUENTIAL
C                   FILE STRUCTURE AVAILABLE IN THE CDC FTN MASS STORAGE
C                   ROUTINES. THE USAGE IS STANDARD.
C          MEMORY MANAGEMENT - THIS PROGRAM MAKES SYSTEM CALLS TO RFL UP
C                   OR DOWN. FIELD LENGTH IS DYNAMIC AND DEPENDS UPON THE
C                   AMOUNT OF MEMORY NEEDED TO READ IN THE RAW COUNTS DATA.
C                   THE COUNT DATA IS READ INTO THE ARRAY "CNTS". IT
C                   IS DIMENSIONED 1 AND RESIDES AS THE LAST ARRAY IN BLANK
C                   COMMON. THE PROGRAM DETERMINES THE AMOUNTS OF COUNTS
C                   THAT WILL BE READ IN (=NO. OF DETECTORS * CHANNELS/DET)
C                   AND REQUESTS THIS ADDITIONAL AMOUNT OF MEMORY. THE
C                   PROGRAM THEN EXCEEDS THE DIMENSIONS OF THE CNTS ARRAY
C                   WITHOUT ERROR. WHEN THIS ARRAY IS NO LONGER NEEDED,
C                   FIELD LENGTH IS REDUCED. THE CDC COMMON MEMORY MANAGER
C                   ROUTINES ARE NOT USED AND MUST BE TURNED OFF BY
C                   USING THE "STATIC" OPTION ON THE FTN COMPILE CARD.
C           COMPILATION - DUE TO THE ABOVE DISCUSSION, ALWAYS USE THE
C                   "STATIC" OPTION WHEN COMPILING THIS PROGRAM.
      END
```

Industrial Hygiene Chemistry

CONTENTS

Preface IH-5

Acknowledgments IH-7

Abstract IH-9

Suggested Handling of Emergency Samples IH-11

The page numbering convention used in this manual consists of the specific procedure number (shown at left in list below) followed by the page number for that procedure. Thus, IH110-2 is page two of procedure IH110. The right column in the list below gives each procedure's status or effective date.

Industrial Hygiene Chemistry Analytical Techniques

Industrial Hygiene Analytical Procedures

IH100 Aliphatic Amines in Air ..... Retired

IH110 Anions by Ion Chromatography ..... Retired

IH120 Aromatic Amines in Air ..... Retired

IH130 Aromatic Amines—A Chemical Spot Test ..... Retired

IH135 Arsenic and Gallium on Air Filters—IENA ..... Retired

IH140 Asbestos Fibers in Air ..... Retired

IH150 Beryllium on Air Filters 09/87

IH155 Breathing Air 04/93

IH160 Cadmium in Urine—Flame AA ..... Retired

IH161 Cadmium in Urine—Flameless AA ..... Retired

IH170 Cholinesterase in Serum ..... Retired

IH180	N,N-Dimethylaminoazobenzene—A Chemical Spot Test	Retired
IH190	Fluoride in Urine	Retired
IH200	Formaldehyde in Air—Alumina Tube Collection	Retired
IH210	Formaldehyde in Air—Impinger Collection	Retired
IH214	Halogens and Sulfur in Liquids—NAA	Retired
IH220	Metals on Air Filters—NIOSH PAT Samples	03/93
IH230	Mercury in Urine	Retired
IH240	Metals—General Procedure	Retired
IH250	Aromatic Nitro-Compounds—A Chemical Spot Test	Retired
IH260	Organic Solvents in Air—General Procedure	05/86
IH270	Organic Solvents—NIOSH PAT Samples	05/86
IH273	Perchlorate in Waters—Colorimetric	09/92
IH274	Petroleum Hydrocarbons, Total Recoverable in Soil	01/92
IH275	Petroleum Hydrocarbons, Total Recoverable in Water	01/92
IH280	Phenol in Urine—Gas Chromatography	Retired
IH290	Phenol in Urine—HPLC	Retired
IH300	Phenol in Water—HPLC	Retired
IH310	Polychlorinated Biphenyls (PCBs) in Air	Retired
IH320	Polychlorinated Biphenyls (PCBs) in Oil	Retired
IH321	Polychlorinated Biphenyls (PCBs)—Screening by NAA	Retired
IH330	Polynuclear Aromatic Hydrocarbons in Air—HPLC	05/86
IH340	Polynuclear Aromatic Hydrocarbons in Air—GC	04/93

IH345 Thallium in Urine—ICPMS 10/90

Trace Metals in Air Filters . . . . . In Progress

IH350 Trichloroacetic Acid in Urine . . . . . Retired

Instrument Procedures

IH800 Gas Chromatography and Mass Spectrometry—
General Procedure . . . . . Retired

IH810 Infrared Spectroscopy—General Procedure . . . . . Retired

PREFACE

The Health and Safety and Environmental Management Divisions are engaged in work to identify hazards to the Los Alamos National Laboratory worker population. Decisions that must be made regarding the worker and his environment depend upon the availability of sound data. Procedures for the measurement of the presence and concentration of substances hazardous to human health as well as an evaluation of the quality of the environment are essential to satisfactory decision making.

An important tool for evaluating the exposure of workers to toxic substances is the analytical method. This section of the manual is a collection of analytical methods used by the occupational health chemist. These methods measure the concentration of the analytes with the precision, accuracy, and specificity required by the industrial hygienist. It is part of the overall quality control effort to support the health and safety programs of the Laboratory.

The analytical procedures were developed by the staff of the Environmental Chemistry Group or were modified from methods developed and evaluated by the National Institute for Occupational Safety and Health (NIOSH) and others for use with industrial hygiene sample. Each procedure is presented simply and concisely. It is hoped that the procedures in this section will be usable by any competent analyst.

ACKNOWLEDGEMENTS

The encouragement, leadership, and support offered by analytical chemistry management are appreciated. Special recognition is also due the following individuals for their general contribution in developing, evaluating, or writing the methods contained herein:

Chris Leibman, Organic Section Leader
Michael G. Bell
George H. Brooks
Daryl Knab
Stuart D. Nielsen
Lawrence W. Ortiz
Ava M. Salman

The section is prepared in loose leaf form to facilitate revisions of the procedures and the inclusion of additional procedures or data sheets. Request for clarification or for help in resolving difficulties encountered while using the procedures are welcome.

Margaret A. Gautier
Editor

Industrial Hygiene Chemistry
Analytical Techniques

Edited by

Margaret A. Gautier

ABSTRACT

This section of the manual has been prepared to document the analytical methodology used by the Los Alamos National Laboratory Environmental Chemistry Group. It is part of the overall quality control effort to support the health and safety programs of the Laboratory. the section contains analytical methods for use in industrial hygiene chemistry. some of the procedures are useful for measuring toxic constituents in blood or urine, but the majority are intended for use in personal air exposure monitoring. The analytical procedures were developed by the Environmental Chemistry staff, were modified from methods developed and evaluated by the National Institute for Occupational Safety and Health (NIOSH), or were adapted from procedures found in the literature. The procedures have been tested by chemists and technicians to prove their validity. The methods measure the concentration of the desired analytes with the precision, accuracy, and specificity required by the industrial hygienist. The procedures utilize equipment and skills available in modern industrial hygiene chemistry laboratories. Precision and accuracy statements are provided where such data are available. Each procedure is presented in a simple and concise manner and includes interferences, apparatus, reagent preparation, calibration methods, and data reduction formulas.

SUGGESTED HANDLING OF EMERGENCY SAMPLES

1. Introduction

Rapid and accurate response to emergency situations related to Industrial Hygiene is a primary responsibility of the industrial hygiene chemist. It is necessary to provide the information needed to help make decisions regarding the best response to an emergency situation. For this reason the analysis of emergency samples must be carried out using an organized plan that avoids unnecessary and unfruitful effort. This outline is presented as a guide to assist in planning these analyses; it is not mandatory that it be rigorously followed.

This guide presupposes that the identity of the sample(s) is completely unknown. If one is analyzing for a specific compound or substance, it is better and quicker to go directly to a procedure specifically for that material.

2. Notification of an Emergency Condition

Notification of an emergency will usually be given before the arrival of the samples. At this time, the situation surrounding the incident should be discussed with those responding to the emergency in an effort to obtain as much information as possible concerning the conditions in the vicinity of the incident, the chemicals involved in the incident, and the number and types of samples to expect. Information sufficient to handle the situation can be obtained at this time, and the more complete information needed to document the incident can be obtained later. Guidance should be given by the industrial hygiene chemist concerning the method of sampling to ensure that the sampling will be adequate to answer the questions asked. Section personnel should be given instructions and should get all necessary instruments and equipment ready before the samples arrive.

3. Receipt of Samples

3.1. Chain of Custody. For legal purposes, it is imperative that the chain of custody of the samples be documented. Obtain a completed Sampling Data Sheet with the samples. Discuss the incident with the person taking the samples to obtain any additional clues that may have been observed regarding sample identity during the sampling.

3.2. Group Office Approval. Obtain approval from the Group Office for emergency priority but do not delay work on the samples while awaiting this approval. It is better to downgrade efforts in the event that the Group Office decides that the situation does not warrant an Emergency Priority than to delay the analyses in a true emergency.

3.3. Radioactive Samples. If there is any indication that they may be radioactive, samples should be checked for radioactivity before an analysis is started. If they are radioactive, special precautions must be taken to protect the analyst and to prevent any radioactive contamination of the building.

3.4. Sample Documentation. Log the samples into the sample management data base to document their receipt and their assignment to an analyst.

3.5. Suggested Analytical Methods. The sample types by category and the sections that discuss the suggested methods of analysis are listed below.

Bulk Solid	Section 4
Filters	Section 5
Bulk Liquids	Section 6
Adsorption Tubes & Badges	Section 7
Gaseous Samples	Section 8

4. Analysis of Bulk Solids

4.1. Infrared Spectroscopy. Prepare a KBr pellet and run an infrared spectrum by the methods described in procedure **IH810**. If the spectrum obtained is not sufficient to identify the material, proceed to Step 4.2. for materials that appear to be organic or to Step 4.3. for those that appear to be inorganic.

4.2. Organic Samples. If the sample appears to be organic, dissolve a portion of the sample in an appropriate solvent, such as hexane, methylene chloride, or methanol. Run a GC/MS analysis of the solution using the methods described in procedure **IH800**. Good operating conditions to employ for substances whose identity is completely unknown, assuming that a 30-m SE-54 fused-silica capillary column or the equivalent is in the instrument, are as follows:

- GC oven program of 100-250°C at 10°C/min, holding at 250°C for the remainder of the run.
- Scan start delay of 2.5 min.
- Injector temperature of 270°C.
- Scan over the mass range of 35-400 amu.
- Injection volume of 2 μL.
- Injection time of 30 s.

4.3. Inorganic Samples. If the sample appears to be inorganic, dissolve a portion of the sample in water or dilute nitric or hydrochloric acid solution. If it dissolves, the resulting solution may be analyzed for selected metals by atomic absorption using procedure **IH240**. If the sample will not dissolve, a metals analysis can be obtained from the Aerosol Science Section using the x-ray fluorescence spectrometer attachment to the electron microscope.

If the sample has dissolved in water and the anion is not apparent from the infrared spectrum, analyze for anions by ion chromatography as in procedure **IH110**.

5. Analysis of Filter Samples

5.1. Specific Metals. If the analysis is for specific metals, analyze by atomic absorption as in Procedure **IH240**.

5.2. Organic Compounds. If organics are of interest, extract the filter with an appropriate solvent, such as hexane, acetone, methylene chloride, or methanol, and analyze the resulting solution by GC/MS as in Procedure **IH800**.

5.3. GC/MS and AA on the Same Filter. If care is taken in the extraction, it is sometimes possible to do both GC/MS and AA on the same filter to give qualitative results.

Carefully extract the filter to remove the organics without dislodging the insolubles. This can often be accomplished in a Buchner funnel such as those sold by Gelman or Millipore for use with membrane filters. Because it is difficult to assure complete extraction or complete retention of insolubles, quantitative results following this extraction would be suspect.

6. Analysis of Bulk Liquids

If the liquid is an aqueous solution, proceed to Section 6.1. If the liquid is an organic, proceed to Section 6.2.

6.1. Aqueous Solutions.

Analyze for **specific metals** in aqueous solutions by atomic absorption using procedure **IH240**. Analyze for **common anions** in aqueous solutions by ion chromatography using procedure **IH110**. Both methods require little pretreatment of the sample. **Volatile organics** in aqueous solutions, if present in relatively high concentrations, can be analyzed by treating the headspace over the liquid as a gaseous sample, Section 8.2.

Analyze for **volatile organics at low concentrations in water** by purge and trap methods. The quickest purge and trap method for qualitative results is to place the sample in a bubbler and bubble nitrogen gas or air through the sample, passing the effluent from the bubbler through a charcoal tube. The charcoal tube is then treated as in Section 7.

If the Hewlett-Packard purge and trap instrument is attached to a gas chromatograph, it will give better results than the previously described method, particularly with highly volatile compounds. However, it takes a long time to set up and get into operation, and the chromatograph cannot be used for other types of samples if the purge and trap instrument is left attached.

For **lower volatility neutral or basic organic materials in aqueous solutions**, make the sample basic to pH 10 (as tested with Hydrion paper) with KOH and extract it with an appropriate solvent, such as methylene chloride or hexane. Dry the extract with

anhydrous Na_2SO_4 and concentrate the extract to a small volume using a Kuderna-Danish evaporator. This solution is now treated as a nonaqueous liquid sample, Section 6.2.

For **lower volatility acidic organic materials in aqueous solution**, make the sample acidic to pH 4 (as tested with Hydrion paper) with sulfuric acid and extract it with methylene chloride. Dry the extract with anhydrous Na_2SO_4 and concentrate the extract to a small volume using a Kuderna-Danish evaporator. This solution is treated as a nonaqueous liquid sample, Section 6.2.

For samples whose identity is completely unknown, and where it may be desirable to look for more than one type of organic, the best sequence is 1) purge and trap for volatiles, 2) extract for basic and neutral compounds, and 3) extract acidic compounds.

6.2. Nonaqueous Liquids

Run a GC/MS analysis, procedure **IH800**, for **nonaqueous liquid samples**. Good operating conditions to employ for a sample whose identity is not known (using a 30-m SE-54 fused-silica capillary column or the equivalent) are as follows:

- Program the GC oven from 30 to 250°C at 10°C/min, holding at 250°C for the remainder of the run.
- Injector temperature of 270°C.
- Scan over the mass range of 35-400 amu.
- Minijector (Precision Sampling Corp., Baton Rouge, Louisiana) with a volume of 0.05 µL for the solvent.
- Scan start delay of 0 s.
- Injection time of 30 s.

To analyze for solutes in a known, **highly volatile solvent** like methylene chloride, use a 2.0-µL injection volume, a scan start delay of 3.0 min, and a 40-s injection time.

To analyze for **solutes in an unknown solvent**, make a first run with an injection volume of 2.0 µL, a scan start delay of 0, and a 40-s injection time. The instrument will probably shut the run down automatically when the solvent elutes. If so, make a second run with an injection volume of 2.0 µL, an injection time of 40 s, and a scan start delay sufficient to clear the solvent, i.e., approximately 1 min past where the instrument automatically shuts down.

CAUTION: When the instrument automatically shuts down due to excess solvent, the oven temperature program will continue. It is best to allow the instrument to sit for sufficient time to complete the temperature program before making a subsequent run to ensure a clean column.

For analysis of nonaqueous liquids that appear to be relatively pure, i.e., for major components, obtain an infrared spectrum using methods in procedure **IH810**.

7. Analysis of Adsorption Tubes and Badges

Elute the adsorbent with an appropriate solvent. The adsorbent will usually be charcoal and should be desorbed using 1.0 mL of carbon disulfide. Run the resulting solution on the GC/MS as in procedure **IH800** using the conditions given in Step 6.2.

8. Analysis of Gaseous Samples

8.1. Infrared Spectroscopy. If there is sufficient sample (greater than 7 liters is best), obtain an infrared spectrum as described in procedure **IH810** using the 20-m cells. If obtaining the IR spectrum will use up all of the sample, first complete the chromatogram as given in Section 8.2. and then obtain the spectrum on the remaining sample. After the spectrum is obtained, treat the contents of the 20-m cell as described in Section 8.3.

8.2. GC/MS Chromatography. Obtain a GC/MS chromatogram of the gaseous sample using procedure **IH800**. Assuming that a 30-m SE-54 fused-silica capillary column or the equivalent is in the instrument, good starting conditions are as follows:

- GC oven program of 30-250°C at 10°C/min, with an initial temperature hold for 3 min and a final temperature hold for the remainder of the run.
- Injector temperature of 270°C.
- Scan range of 35-400 amu allows detection of materials with molecular weights greater than 35 without interference from the normal components of the air.
- Injection volume of 5.0 mL with a gas syringe.
- Injection time of 30 s.
- Scan start delay of 0 s.

Lower molecular weight materials can be detected by dropping the lower end of the scan range to 10 amu, but the large amount of air present complicates the detection. Carbon monoxide cannot be determined on our low-resolution mass spectrometer because its nominal molecular weight, 28 amu, is the same as that of nitrogen.

8.3. Evacuate Cell. After obtaining the infrared spectrum, evacuate the 20-m cell by pumping the sample through a charcoal tube. This can be done by attaching the charcoal tube between the sample inlet valve of the cell and the room air valve on the vacuum system, using rubber tubing. Shut off the sample cell valve on the main panel and the main valve to the pump. Open the valves at the two ends of the rubber tubing and then slowly open the valve to the pump. When the gauge reads less than 10 mm

pressure and there is no longer the sound of air through the tubing, shut off the valves at the two ends of the rubber tubing, open the sample cell valve to complete evacuation of the cell, and remove the charcoal tube. Elute the charcoal tube with 1.0 mL of carbon disulfide and run the resulting solution on the GC/MS as in procedure **IH800** using the conditions given in Section 6.2.

ALIPHATIC AMINES IN AIR

Analyte: Aliphatic Amines	**Method No.:** IH100
Matrix: Air	**Range:** 0.05-120 mg/m^3 in a 100-L air sample
Procedure: Adsorption on silica gel; elution with acid; GC analysis before and after reaction with benzaldehyde	**Precision:** 3-20% RSD
Effective Date: 03/01/75 to 09/10/92	**Author:** Gerry Wood

1. Principle of Method

1.1. A known volume of air is drawn through a tube containing silica gel to trap aliphatic amines.

1.2. The silica gel is transferred to glass-stoppered tubes and treated with hydrochloric acid. A portion of the resulting acid solution is made alkaline with an excess of sodium hydroxide, and an aliquot of the alkaline solution is analyzed by gas chromatography (GC) with a flame ionization detector.

1.3. A second portion is made alkaline and reacted with benzaldehyde before analysis by gas chromatography.

1.4. The method may be used to determine a single aliphatic amine or to determine two or more amines in a single sample. The method has been applied to the following individual compounds:

Butylamine	Ethylamine
Diethylamine	Isopropylamine
Diisopropylamine	Methylamine
Dimethylamine	Triethylamine

2. Range, Sensitivity, and Detection Limit

2.1. The range of the method is at least from 0.05 to 12 mg/sample.

2.2. The lower limit of quantitation of 0.05 mg/sample is the lowest value at which the desorption and analysis procedure was found to be acceptably precise (see Step 3.2) and quantitative (see Step 3.6). This limit corresponds to 0.5 mg/m^3 methylamine in a 100-L air sample.

2.3. The upper limit is at least 12 mg of amine per sample. This amount of methylamine was retained by the 600-mg section of silica gel in the sampling tube without breakthrough when 93 L of high-humidity (93% RH) air containing 129 mg/m^3 of methylamine was sampled. This limit corresponds to 120 mg/m^3 in a 0.100 m^3 air sample.

3. Accuracy and Precision

3.1. The volume of the air sample can be measured to within ±5% if a pump with a calibrated volume indicator is used. Volumes calculated from initally set flow rates may be less accurate because of changes in flow rate during sampling.

3.2. The collection efficiency for aliphatic amines is essentially 100% under most conditions as confirmed by negligible amounts of amine collected in the backup sections of the sorbent tubes.

3.3. The high molecular weight amines and small amounts of all amines are incompletely desorbed. When a correction is made for desorption efficiency as described in Step 9.3., the accuracy approaches 100%. Desorption efficiencies can be improved by using 20% methanol in the acid eluent. Methanol may interfere with the analyses of some of the lighter (underivatized) amines.

3.4. Some loss (9%) of butylamine has been observed in sealed tubes stored for a month. Similar losses occur for other amines.

3.5. The precision of the analysis is dependent upon the precision and sensitivity of the technique used to quantitate the gas chromatographic peaks of samples and standards. Electronic digital integrators with base-line correction capabilities will maximize analytical precision, particularly at lower concentrations. For lower concentrations (0.01 to 0.2 mg/sample) the analytical precision may be ±20%; at higher concentrations it approaches ±3%.

3.6. A relative standard deviation of 3% has been determined for the analysis of 10 samples of 1.2 mg of methylamine collected from 4 L of air (300 mg/m^3) with a personal sampling pump. The recovery was 99%.

4. Interferences

4.1. The most common sampling interference is water vapor. With the sorbent tube described, at least 96 L of 100% relative humidity air can be sampled over an 8-h period at 200 mL/min without displacement of the collected aliphatic amines by water vapor.

4.2. Any compound that has nearly the same retention time on the GC column as one of the subject aliphatic amines or its derivative is an interferent. This type of interference can often be overcome by changing the GC operating conditions or by selecting another column. Retention time data on a single column, or even on a number of columns, cannot be considered as conclusive proof of chemical identity. It is important that a sample of the bulk amine or mixture of amines be submitted at the same time as the sample tubes so that chemical identification of possible interferents can be made.

5. Advantages and Disadvantages

5.1. The sampling method uses a small, portable device involving no liquids. The sorbent tube can be used for at least 8 h to measure an average workday concentration, or for only 15 min to measure an excursion concentration. Desorption of the sample and preparation for analysis are simple. The analysis is accomplished by a rapid instrumental method.

5.2. Most analytical interferences can be eliminated by altering the GC operating conditions.

5.3. Several aliphatic amines can be collected and determined simultaneously. This is especially useful when the identity and composition of the amine vapors are not known.

5.4. A disadvantage is the tendency of amines to oxidize while absorbed on surfaces exposed to air. This can be overcome by addition of concentrated hydrochloric acid to the sorbent sections soon after sampling rather than during desorption.

6. Apparatus

6.1. Air sampling equipment.

6.1.1. Sorbent tubes. The sorbent tubes consist of Pyrex glass tubes 125-mm long and 8-mm i.d., packed with three separate sections of 45/60-mesh activated silica gel. The weights of the three sections of silica gel are, in order, 600, 150, and 150 mg; these tubes are designed for sample flow in either direction. Plugs of 100-mesh stainless-steel screen are used to contain the silica-gel sections. These plugs of negligible pressure drop are prepared from 7-mm discs of screen held in place by Teflon rings. Pieces of Pyrex tubing 12-mm long and 7 mm in o.d. are located between the sorbent sections to inhibit migration of the amines. The ends of the tubes are flamesealed after packing to prevent contamination before use for sampling. The pressure drop across the tubes does not exceed 6 cm of water at a flow rate of 200 mL/min. The silica gel should be the equivalent of Silica Gel D-08, Chromatographic Grade, Activated and Fines Free, 45/60-mesh, as supplied by Applied Science Laboratories, Inc., State College, Pennsylvania. Polyethylene caps should be provided to seal the tubes after sampling has been completed.

6.1.2. Personal sampling pump. The personal sampling pump should be capable of operation at a constant flow rate of 200 mL/min for up to 8 h. A sample volume indicator is desirable. The pump should be calibrated with a representative sorbent tube in the line. A wet or dry test meter or a glass rotameter capable of measuring a flow rate of 200 mL/min to within ±5% may be used in the calibration.

6.2. Gas chromatograph: equipped with a flame ionization detector and linear temperature programming.

6.3. Silanized glass column: 1.8-m by 4-mm, packed with 60/80-mesh Chromosorb 103 (Johns-Manville).

6.4. GC column: 1.8-m by 4-mm-i.d., glass, silanized and packed with 10% (by weight) silicone SE-30 on 80/100-mesh Supelcoport or equivalent support.

6.5. Recorder with an electronic digital integrator.

6.6. Test tubes or flasks: glass-stoppered.

6.7. Glass microsyringes: 10-μL.

6.8. Pipettes and volumetric flasks for preparation of standard solutions.

7. Reagents

7.1. Hydrochloric acid (1.0 N).

7.2. Sodium hydroxide (1.1 N).

7.3. Aliphatic amines. Reagent grade or as aqueous solutions prepared from reagent grade chemicals to be used as standards.

7.4. Helium (Bureau of Mines, Grade A).

7.5. Hydrogen (prepurified).

7.6. Air (compressed and filtered).

8. Calibration and Standards

8.1. For accuracy in the preparation of standards, it is recommended that an initial standard be prepared in a relatively large volume and at a high concentration. Aliquots of this standard can then be diluted to prepare other standards.

8.1.1. Prepare the initial standard by pipetting an appropriate volume of amine into a 100-mL volumetric flask and adding distilled water to the mark. Check the concentration of this solution by titrating with standard hydrochloric acid.

8.1.2. Make the first dilution by adding an equal volume of 2.0 N hydrochloric acid to an aliquot of the initial standard.

8.1.3. Make additional dilutions with 1.0 N hydrochloric acid so that the final concentration of hydrochloric acid will be the same in standards and samples.

8.2. Example of standard preparation.

8.2.1. Prepare butylamine standards by adding 1.0 mL of butylamine to a 100-mL volumetric flask and diluting to the mark with water. The concentration of this initial standard is 7.39 mg/mL or 0.101 M. This concentration can be easily checked by titration with 0.100 N hydrochloric acid.

8.2.2. Dilute a 2-mL aliquot of the initial standard with 25 mL of 2.0 N hydrochloric acid to give a second standard of 3.695 mg/mL in 1.0 N hydrochloric acid.

8.2.3. Dilute 1.0 mL of this second standard to 25 mL with 1.0 N hydrochloric acid to give a concentration of 0.148 mg/mL.

8.2.3.1. This concentration in 1.0 N hydrochloric acid is comparable to that obtained by sampling butylamine in air at its TLV concentration (15 mg/m^3) on 600 mg of silica gel for 6 h at 200 mL/min and desorbing into 8 mL of 1.0 N hydrochloric acid.

8.2.3.2. If the desorption efficiency is 100%, the resulting concentration of butylamine is 0.135 mg/mL.

8.2.4. Various volumes of the second standard (3.695 mg/mL) should be diluted to 25 mL to give a series of working standards covering the range of interest.

8.3. A 0.5 mL aliquot of each standard is transferred to another container and 0.5 mL of 1.1 N sodium hydroxide is added. These aliquots should be analyzed under the same gas chromatographic conditions and during the same time period as the unknown samples. This will minimize the effect of day-to-day variation in the response of the flame ionization detector.

8.4. A calibration curve is prepared for each amine by plotting average peak area against concentration of the standard solution in mg/mL (mg of amine per mL of 1.0 N hydrochloric acid).

9. Procedure

9.1. Cleaning of equipment.

9.1.1. Wash all glassware with RBS-35 laboratory cleaning solution and rinse with tap water, distilled water, and reagent-grade methanol.

9.1.2. Dry in an oven.

9.2. Analysis of samples.

9.2.1. Preparation of samples.

9.2.1.1. Remove and discard the plugs and glass spacers and transfer each section of silica gel to a separate glass-stoppered test tube or flask.

9.2.1.2. Label the samples and sections of silica gel and analyze each section separately.

9.2.2. Desorption.

9.2.2.1. Desorb the amines from silica gel by adding 2 mL of 1.0 N hydrochloric acid to the 150-mg sections and 8 mL to the 600-mg section. Use water if HCl was added before storage.

9.2.2.2. Shake the sample mixtures occasionally over a period of 1 h. Tests have indicated that desorption reaches a maximum in an hour.

9.2.3. Neutralization.

9.2.3.1. Transfer a 0.5 mL aliquot to another container and add 0.5 mL of 1.1 N sodium hydroxide to make the solution alkaline and to regenerate the free amines. Check with a drop on litmus paper.

9.2.3.2. An aliquot of this solution is analyzed by gas chromatography.

9.2.4. Gas chromatographic conditions.

9.2.4.1. Typical operating conditions for the gas chromatograph to analyze underivatized amines on the Chromosorb 103:

- Helium carrier gas flow rate, 120 mL/min.
- Hydrogen gas flow rate to detector, 40 mL/min.
- Air flow rate to detector, 540 mL/min.
- Injection port temperature, 160°C.
- Detector temperature, 190°C.
- Column temperature, 115 to 180°C at 10°C/min; hold for 4 min. For a sample containing only one amine or a sample containing two closely eluting amines, the column temperature may be kept isothermal at 115°C.

9.2.4.2. Typical operating conditions for the SE-30 column:

- Helium gas flow rate, 50 mL/min.
- Injection port temperature, 150°C.
- Detector temperature, 200°C.
- Column temperature, 100°C.

Under these conditions, unreacted benzaldehyde elutes at 190 s and benzylideneaminomethane elutes at 425 s.

For higher amines, use temperature programming to the column temperature limit (300°C).

9.2.5. Preparation and reaction.

9.2.5.1. Transfer 0.5 mL of each eluate and each prepared standard to other test tubes or vials.

9.2.5.2. Add 0.5 mL of alkalinizing solution and mix thoroughly.

9.2.5.3. Verify the basicity of the solution with a drop on litmus paper.

9.2.5.4. Add 10 μL of benzaldehyde, mix thoroughly, and allow at least 5 min for reaction.

9.2.6. Injection of sample.

9.2.6.1. To eliminate difficulties arising from blowback or distillation within the syringe, use the solvent flush injection technique as given below.

9.2.6.2. Flush the 10-μL syringe several times with distilled water to set the barrel and plunger. Draw in 3 μL of water.

9.2.6.3. With the needle removed from the water, pull the plunger back about 0.2 μL to draw in a pocket of air.

9.2.6.4. Immerse the needle in the sample solution and withdraw a 3-μL aliquot taking into consideration the volume in the needle.

9.2.6.5. After the needle is removed from the sample solution and before injection, pull the plunger back a short distance to minimize evaporation at the tip of the needle.

9.2.6.6. Inject duplicate 3-μL aliquots of each sample and standard.

9.2.7. Measurement of peak area.

9.2.7.1. Measure the area of each amine peak with an electronic digital integrator or other suitable means of area measurement.

9.2.7.2. Estimate the amount of each individual amine from calibration curves prepared as described in Section 8.

9.3. Determination of desorption efficiency.

9.3.1. Importance of determination.

9.3.1.1. Desorption efficiency for a particular compound can vary from one lot of silica gel to another, and also from one laboratory to another. It is necessary to determine, at least once, the desorption efficiency for each amine with each lot of silica gel used.

9.3.1.2. Among the aliphatic amines listed in Step 1.4., desorption efficiency decreases with increasing molecular weight. Desorption efficiency increases with increasing ratio of hydrochloric acid to silica gel; however, an increase in this ratio results in a reduction in analytical sensitivity. A compromise ratio of 75 mg of silica gel per mL of hydrochloric acid is recommended.

9.3.1.3. Desorption efficiency may also vary with the amount of amine present on the silica gel. Measurements of efficiency should, therefore, be made for at least two quantities within the normal range of sample size.

9.3.2. Procedure for determination of desorption efficiency.

9.3.2.1. Place 150 mg of silica gel in a 2-mL glass-stoppered tube. The silica gel must be from the same lot as that used in collecting the sample. It can be obtained from unused sorbent tubes.

9.3.2.2. With a microliter syringe, inject a known amount of the amine, either pure or in water solution, directly onto the silica gel. Close the tube with the glass stopper and allow it to stand at least overnight to assure complete adsorption of the amine.

9.3.2.3. Prepare at least three tubes for each of at least two different quantities of amine. These tubes are referred to as samples.

9.3.2.4. Prepare a blank in the same manner, as in Steps 9.3.2.1. and 9.3.2.2., omitting the amine.

9.3.2.5. Analyze the samples and blank as described in Section 9.2.

9.3.2.6. Analyze three standards prepared by adding identical amounts of the amine to 2.0 mL of 0.1 N hydrochloric acid.

9.3.2.7. Determine the concentration of the amine in the blank, samples, and standards using calibration curves prepared as described in Section 8.

9.3.2.8. The desorption efficiency is calculated by dividing the concentration of amine found in the sample by the concentration obtained for the corresponding standard.

10. Calculations

10.1. Read the weights (mg) of sample on each tube section corresponding to each measured peak area using the calibration curve. Correct each value for the weight found in the blank, if any. Add the weights found in the front and backup sections of the sample tube to obtain the total weight of compound in the air volume sampled.

10.2. Divide the total weight by the desorption efficiency to obtain the corrected sample weight.

10.3. Determine the volume V_s (m^3) of air sampled at ambient conditions based on the appropriate information, such as flow rate (L/min) multiplied by sampling time (min) and 10^{-3} m^3/L.

10.3.1. If a pump using a rotameter for flow rate control was used for sample collection, a pressure and temperature correction must be made for the indicated flow rate as is given in Step 10.3.2.

10.3.2. The expression for this corrected volume is

$$V_s = 10^{-3} \times f \times t \sqrt{\frac{P_1}{P_2} \times \frac{T_2}{T_1}} \quad ,$$

where V_s = volume of air sampled,

f = sample flow rate (L/min),

t = sampling time (min),

P_1 = pressure during calibration of sampling pump (torr),

P_2 = pressure of air samples (torr),

T_1 = temperature during calibration of sampling pump (K), and

T_2 = temperature of air sampled (K).

10.4. Divide the total corrected weight (mg) of amine by V_s (m^3) to obtain the concentration of amine in the air sampled (mg/m^3).

11. Source Materials

11.1. E. E. Campbell, G. O. Wood, and R. G. Anderson, "Development of Air-Sampling Techniques, October 1, 1973—March 31, 1974," Los Alamos Scientific Laboratory report LA-5634-PR (1974). Also available from the National Technical Information Services, Springfield, Virginia.

11.2. E. E. Campbell, G. O. Wood, and R. G. Anderson, "Development of Air-Sampling Techniques, April 1—September 30, 1974," Los Alamos Scientific Laboratory report LA-5973-PR (1975). Also available from the National Technical Information Services, Springfield, Virginia.

11.3. E. E. Campbell, G. O. Wood, and R. G. Anderson, "Development of Air-Sampling Techniques, October 1, 1974—March 31, 1975," Los Alamos Scientific Laboratory report LA-6057-PR (1975). Also available from the National Technical Information Services, Springfield, Virginia.

11.4. E. E. Campbell, G. O. Wood, and R. G. Anderson, "Development of Air-Monitoring Techniques Using Solid Sorbents, April 1—September 30, 1975," Los Alamos Scientific Laboratory report LA-6216-PR (1976). Also available from the National Technical Information Services, Springfield, Virginia.

11.5. G. O. Wood and R. G. Anderson, "Development of Air-Monitoring Techniques Using Solid Sorbents, October 1, 1975—March 31, 1976," Los Alamos Scientific Laboratory report LA-6513-PR (1976). Also available from the National Technical Information Services, Springfield, Virginia.

11.6. G. O. Wood and J. W. Nickols, "Development of Air-Monitoring Techniques Using Solid Sorbents, October 1, 1976—December 31, 1977," Los Alamos Scientific Laboratory report LA-7295-PR (1978). Also available from the National Technical Information Services, Springfield, Virginia.

ANIONS BY ION CHROMATOGRAPHY

Analyte: Inorganic Anions	**Method No.:** IH110
Matrix: Aqueous solutions	**Accuracy and Precision:** 100% ±5% (mean ±1 sigma) at 10 ppm
Procedure: Selective anion elution and detection	**Minimum Detectable Level:** Varies with the anion; approximately 1 ppm
Effective Date: 05/20/83 to 01/06/92	**Contact Person:** Daryl Knab

1. **Principle of Method**

   1.1. Anions are selectively eluted from an ion exchange column and detected by a conductivity detector.

2. **Accuracy and Precision**

   2.1. Average recovery of the standards is 100 ±5% (± one standard deviation) at the 10 ppm concentration level.

3. **Apparatus**

   3.1. Ion chromatograph: Dionex Model 2010 with an anion fiber suppressor, Dionex, Inc., Sunnyvale, California.

   3.2. Micropipettes: Eppendorf 50-, 100-, 500-, and 1000-µL.

   3.3. Micropipettes: Eppendorf variable volume, 20-100 µL and 100-1000 µL.

   3.4. Pipettes: 2-, 3-, 5-, and 10-mL.

   3.5. Polyethylene bottles: 500- and 1000-mL with screw cap.

   3.6. Syringe: 10-mL, with Luer fitting.

   3.7. Compressed air cylinder: equipped with a two-stage regulator to reduce pressure to 80-120 psi.

   3.8. Polyethylene bottles: 4-L with spigot.

   3.9. Tygon tubing: 1/8-in. i.d. for connection from gas cylinder to the chromatograph.

   3.10. Recorder: with 0-1 V input. An integrator that calculates peak height is desirable.

4. Reagents

4.1. Sulfuric acid (ACS reagent-grade). Concentrated H_2SO_4 (specific gravity 1.84). If the sulfuric acid has any coloration, choose another bottle.

4.2. Sodium chloride, sodium nitrate, sodium bromide, sodium fluoride, sodium phosphate, sodium sulfate (ACS reagent-grade). Prepare individual solutions in H_2O of each salt to give a concentration of 1 mg/mL of the anion.

4.3. Sulfuric acid (0.025 N). A regenerant solution for the fiber suppressor. Add 2.8 mL of concentrated H_2SO_4 to 4L of H_2O and stir.

4.4. Sodium bicarbonate/sodium carbonate eluent. Dissolve 0.974 g of $NaHCO_3$ and 0.975 g of $NaCO_3$ in 4 L of H_2O.

4.5. Sodium borate eluent. Required only for formaldehyde determination. Dissolve 7.63 g of sodium borate in water and dilute to 4 L with H_2O.

5. Calibration and Standards

5.1. Dilute the solutions in Step 4.2. to 1000 mL to give standards in the ppm range.

5.2. Prepare a calibration curve by running various concentrations of each anion of interest.

5.3. The calibration should yield a straight line passing through zero. Record the retention time for each anion that is to be measured.

6. Procedure

6.1. Preparation of the chromatograph.

6.1.1. Turn on the compressed air and set the regulator for 80-120 psi.

6.1.2. Start the flow of the H_2SO_4 regenerant solution by setting a 4-L bottle on the floor and inserting the drain tube. The flow should be 2-3 mL/min.

6.1.3. Fill the H_2O bottle and the eluent solution bottle.

6.2. Priming the manifold.

6.2.1. Connect the 10-mL syringe to the Luer fitting of valve No. 5 (regenerant solution). Open the stopcock and turn on the valve. Withdraw 2-5 mL of the solution. Close the stopcock but **do not** turn off the valve. **The regenerant solution is always primed first.**

6.2.2. Connect the syringe to the No. 6 stopcock (H_2O), open the stopcock, and turn on the valve. Turn off valve No. 5. Withdraw 2-5 mL of solution and close the stopcock.

NOTE: When making an eluent change while the pump is running, first select the new eluent, wait 1-2 s, and then turn off the old eluent. This prevents the formation of bubbles in the eluent manifold during the change.

6.2.3. Repeat Step 6.2.2. for the $NaHCO_3/Na_2CO_3$ eluent or any other eluent that will be used for the analysis.

6.2.4. Turn on the pump and set the pump flow to 2 mL/min.

6.2.5. Set the upper pressure limit switch to 1500 psi and the lower pressure limit switch to zero.

6.3. Suppressor regeneration.

6.3.1. Turn on valve No. 5 and turn off other valves.

6.3.2. After 10 min, turn on valve No. 6 (H_2O) and turn off valve No. 5. Rinse with H_2O for 10 min. During the rinse cycle all valves and tubing in the pump eluent manifold are automatically rinsed with H_2O, eliminating possible contamination from the regenerant.

6.4. Sample run.

6.4.1. Turn on the eluent valve (generally this is No. 1) and turn off No. 6.

6.4.2. Turn on the conductivity cell. Be certain that the cell is in **LOCAL** mode and the **AUTO OFFSET** is off.

6.4.3. Set the conductivity cell range to 1K.

6.4.4. Turn on the recorder.

6.4.5. Be certain that the valve for the proper eluent is turned on and that the sample port **LOAD** switch is on.

6.4.6. Let the eluent flow through the system until a stable base line is obtained on the recorder chart when the 100 µS scale is used.

6.4.6.1. The conductivity cell should read less than 50 µS (about 25-35) in less than 10 min.

NOTE: The height of the regenerant reservoir above the end of the waste line should be approximately 5 ft. The regenerant flow should be 2-3 mL/min. If the flow rate is too low, the conductivity will remain high.

6.4.6.2. If the base line drifts upward or downward, adjust the suppressor regenerant flow rate to level the base line. Generally, decreasing the flow rate causes the base line to rise, and increasing the flow rate causes the base line to drop.

6.4.6.3. When using strong eluents such as 0.008 M Na_2CO_3, increase the regenerant flow rate. If the background conductivity remains high, increase regenerant concentration to 0.05 N H_2SO_4.

6.4.7. Set the **LOAD/INJECT** valve to **LOAD**.

6.4.8. Flush the sample loop by injecting at least 1 mL of H_2O.

6.4.9. Turn on the **AUTO OFFSET** and zero the recorder at 10% of full scale.

6.4.10. Inject a minimum of 0.5 mL of sample (0.25 mL can be used for successive aliquots of the same sample).

6.4.11. Turn on the **INJECT** valve.

6.4.12. In about 30 s a valve can be heard closing with a thump. At that instant, turn on the **LOAD** valve and at the same time reset the **AUTO OFFSET** to zero by turning off the **AUTO OFFSET** and then turning on the **AUTO OFFSET**.

6.4.13. The results for the first injection of each type of sample will be low; therefore, two injections of a sample type will be required.

6.4.14. After the last sample injection, flush the system by injecting at least 1 mL of H_2O. Also flush with H_2O between different types of samples.

6.5. Short-term shutdown (overnight).

6.5.1. Regenerate the suppressor column.

6.5.2. Turn off the pump and recorder.

6.5.3. Set the conductivity detector range to 10K and turn off the cell.

6.5.4. Leave the main power on.

6.6. Long-term shutdown.

6.6.1. Follow Steps 6.5.1. to 6.5.3. In addition, turn off the main power and close the valve on the air cylinder.

7. Calculations

7.1. Plot the standard curves using linear graph paper with retention time on the y-axis and anion concentration on the x-axis.

7.2. Determine the concentration of the samples from the standard curve.

8. Source Materials

8.1. *Operator's Manual for System 2010 Ion Chromatograph* (Dionex Corp., Sunnyvale, California, February 1981).

8.2. R. Wetzel, F. C. Smith, Jr., and E. Cathers, "Rapid Analysis of Multiple-Ion Industrial Samples," *Industrial Research and Development* (January 1981).

AROMATIC AMINES IN AIR

Analyte: Aromatic Amines[a]	**Method No.:** IH120
Matrix: Air	**Range:** 0.01-14 mg/sample
Procedure: Adsorption on silica gel; elution by ethanol; GC analysis	**Precision:** ±4.5% RSD
Effective Date: 04/01/75 to 09/10/92	**Author:** Gerry Wood

1. Principle of Method

1.1. A known volume of air is drawn through a tube containing two silica-gel sections to trap the aromatic amines present.

1.2. The silica gel in the tube is transferred to a glass-stoppered tube and the amines desorbed with ethanol.

1.3. An aliquot of the desorbed aromatic amines in ethanol is injected into a gas chromatograph (GC).

1.4. Peak areas are determined and compared with calibration curves obtained from the injection of standards.

2. Range and Sensitivity

2.1. The lower limit of this method using a flame ionization detector is 0.01 mg/sample for any one compound listed in Table I when the analyte is desorbed with 5 mL of ethanol and a 10-μL aliquot is injected into the gas chromatograph. Sensitivity for p-nitroaniline is five times less.

2.2. The upper limit is at least 14 mg/sample. This is the minimum amount of aniline that the large section (700 mg) and the center section (150 mg silica gel) of the sampling tube will retain before 2% of the sample is found on the third (150 mg) section after 8 h of sampling. The corresponding upper limit for sampling in the reverse direction through the tube is 3.5 mg/sample. The less volatile substituted anilines have higher upper limits of detection than aniline.

[a]The list of aromatic amines for which this method has been specifically developed is given in Table I.

TABLE I. AROMATIC AMINES FOR WHICH THE METHOD HAS BEEN TESTED

	OSHA Standard		Recommended Sampling Volume (liters)	
	(ppm)	(mg/m^3)[a]	Minimum[b]	Maximum[c]
Aniline	5	19	5	150
N,N-Dimethylaniline	5	25	5	190
o-Toluidine	5	22	5	300
2,4-Xylidine	5	25	5	430
o-Anisidine	0.1	0.5	250	35 800
p-Anisidine	0.1	0.5	250	33 000
p-Nitroaniline	1	6	80	12 100

[a]Taken or calculated from *Federal Register* 37, No. 202, 22139 (18 October 1972).
[b]Based on analytical sensitivity and 0.1 of the OSHA standard when using the large section as the initial section (see 2.1.). When the smaller section is used as the initial section, divide these minimum volumes by 5.
[c]Based on breakthrough studies at high humidities and a concentration of 5 times the OSHA standard when using the large section as the initial section. When the smaller section is used as the initial section, divide these maximum volumes by 5.

3. Accuracy and Precision

3.1. The accuracy of the method depends upon collection efficiencies and desorption efficiencies. If a negligible amount of aromatic amine is detected on the backup section, the collection efficiency of the tube must be essentially 100%. Desorption efficiencies for the range of 1-8 mg have been found to be 100% within experimental error of ±5%.

3.2. Precision of the analysis is very dependent upon the precision and sensitivity of the technique used to quantitate gas chromatographic peaks of samples and standards. Electronic digital integrators with base-line correction capabilities can be used to maximize analytical precision, particularly at lower concentrations.

3.3. Precision in preparation of chemical standards can be ±1%.

3.4. The precision of the overall method, ±4.5% relative standard deviation, has been determined from eight consecutive identical samples taken with a personal sampling pump.

3.5. Analytical precision can be improved by reducing or eliminating the error associated with syringe injection into the gas chromatograph.

3.5.1. This is best accomplished by the addition of an internal standard to the ethanol used to both prepare standards and elute samples from the silica gel.

3.5.2. It is recommended that a solution containing 0.1% n-heptanol in ethanol be used as an internal standard.

3.5.3. n-Octanol may be preferable for isothermal analyses at temperatures above 120°C.

4. Interferences

4.1. The most common possible sampling interference is water vapor. The sampling tube has been designed so that 96 L of high humidity (100%) air can be sampled over an 8-h period at 200 mL/min without displacement of the collected aromatic amines by water vapor.

4.2. Any compound that has nearly the same retention time as one of the Table I aromatic amines at the gas chromatograph analytical conditions described in this method is an interference. This type of interference can often be overcome by changing the operating conditions of the gas chromatograph or selecting another column. Retention time data on a single column, or even on a number of columns, cannot be considered as conclusive proof of chemical identity in all cases. For this reason it is important that, whenever practical, a sample of the bulk compound or mixture be submitted at the same time as the sample tube so that chemical identification can be made by other means.

5. Advantages and Disadvantages

5.1. The sampling method uses a small, portable device involving no liquids. Taking the effect of humidity into account, a sampling time of up to 8 h can be taken for an average workday concentration or a 15-min sample can be taken to test for excursion concentrations. Desorption of the collected sample is simple and is accomplished with a solvent of low toxicity. The analysis is accomplished by a quick instrumental method. Most analytical interferences that occur can be eliminated by altering gas chromatographic conditions. Several aromatic amines can be collected and analyzed simultaneously. This is useful where the composition of the aromatic amine vapors may not be known.

5.2. A major disadvantage is that the precision of the method is limited by using the personal sampling pumps currently available. After initial adjustment of flow, any change in the pumping rate will affect the volume of air actually sampled. If the pump used is calibrated for one tube only, as is often the case, the precision of the volume of air sampled will be limited by the reproducibility of the pressure drop across the tubes.

6. Apparatus

6.1. Gas chromatograph: equipped with a flame ionization detector. Linear temperature programming capability is desirable but not essential.

6.2. Column: (1.22-m by 3.3-mm-o.d.) packed with Silicone OV-25 liquid phase, 10% on 80/100 mesh Supelcoport (or equivalent support). A column (2-ft by 1/8-in.-o.d.) packed with Chromosorb 103 (80/100 mesh) can be used to analyze all the amines of Table I except p-nitroaniline.

6.3. Recorder and electronic integrator.

6.4. Tubes or flasks: glass-stoppered, 1- and 10-mL.

6.5. Syringes: 10-μL.

6.6. Pipettes and volumetric flasks for preparation of standard solutions.

7. Reagents

7.1. Ethanol (95%).

7.2. n-Heptanol (reagent-grade).

7.3. n-Octanol (reagent-grade).

7.4. Aromatic amine standards (reagent-grade).

7.5. Helium (Bureau of Mines, Grade A).

7.6. Hydrogen (prepurified).

7.7. Air (filtered and compressed).

8. Calibration and Standards

8.1. For accuracy in the preparation of standards, it is recommended that one standard be prepared in a relatively large volume and at a high concentration. Aliquots of this standard can then be diluted to prepare other standards.

8.1.1. The solvent and diluent used must be the same ethanol/n-heptanol mixture used for the elution of the sample.

8.1.2. For example, to prepare a 100-mL standard corresponding to a 96-L air sample containing 95 mg/m^3 of aniline (density = 1.022 g/mL) desorbed with 5 mL,

$$\frac{(95\ \text{mg/m}^3)\,(0.096\ \text{m}^3)}{5\ \text{mL}} \times \frac{100\ \text{mL}}{1.022\ \text{mg/}\mu\text{L}} = 178\ \mu\text{L}$$

of aniline that is added to a 100-mL volumetric flask and diluted to the mark. The resulting concentration is as follows:

$$\frac{(178\ \mu L)\ (1.022\ mg/\mu L)}{100\ mL} = 1.82\ mg/mL \quad .$$

If 2 mL of this solution is diluted to 10 mL in a volumetric flask with the ethanol/n-heptanol mixture, the resulting concentration is as follows:

$$(1.82\ mg/mL)\ \frac{2\ mL}{10\ mL} = 0.365\ mg/mL \quad .$$

8.2. When microliter pipettes are used instead of microliter syringes, it is better to prepare standards using a round number of microliters (e.g., 200 µL of aniline instead of 178 µL). For solids, the amount of compound used for the first standard should be weighed on an analytical balance. A series of standards is prepared varying in concentration over the range of interest.

8.3. The standards prepared should be analyzed under the same GC conditions and during the same time period as the unknown samples. This will minimize the effect of day-to-day variations of the flame ionization detector response.

8.3.1. A standard curve is prepared for each compound by plotting ratios of peak areas of the compound to the internal standard against the concentration of the compound.

8.3.2. Determine the concentration of the eluted sample from the standard curve.

8.3.3. The concentration in mg/mL is converted to total sample weight by multiplying by the amount of ethanol used for that section (1 or 5 mL).

9. Procedure

9.1. Cleaning of equipment.

9.1.1. All glassware used for the laboratory analysis is washed with RBS-35 glassware cleaner followed by tap and distilled water rinses and a final rinse with reagent-grade methanol.

9.1.2. The glassware is to be dried in an oven.

9.2. Storage.

9.2.1. After sampling, tubes should be tightly capped and not subjected to extremes of high temperature or low pressure.

9.2.2. If the analysis is to be delayed beyond one week after sampling, each tube should be filled with an inert gas (helium, nitrogen, etc.) to prevent loss of sample by oxidation.

9.2.3. Refrigeration is recommended.

9.3. Analysis of samples.

9.3.1. The silica-gel sections are transferred to separate glass-stoppered tubes or flasks (2 mL for the smaller sections and 10 mL for the larger section) by removing and discarding the stainless steel plugs and glass spacers. Label the sections and analyze each section separately.

9.3.2. Desorption of samples.

9.3.2.1. Before analysis, ethanol containing 0.1% n-heptanol internal standard is pipetted into each flask, 5 mL for the large section and 1 mL for all other sections.

9.3.2.2. Tests indicate that desorption will be complete in 30 min if the sample is stirred or shaken occasionally.

9.3.3. Gas chromatograph conditions.

- Carrier flow, 25 mL He/min.
- Injection port, 150°C.
- Flame ionization detector, 250°C, 50 mL/min H_2, 470 mL/min air.
- Oven temperature program, 100°C for 4 min, then increase to 225°C at 8°C/min.

9.3.4. Injection of sample.

9.3.4.1. With an internal standard in the eluent, direct injection of up to 10 µL with a microliter syringe is acceptably precise.

9.3.4.2. At least duplicate injections of the same sample or standard are recommended.

9.3.5. Measurement of peak area.

9.3.5.1. The areas of the sample peak and the internal standard peak are measured by an electronic integrator or some other suitable method of area measurement.

9.3.5.2. The ratio of these areas is calculated and used to determine sample concentration in the eluent by using a standard curve.

10. Calculations

10.1. Corrections for the blank must be made for each sample.

$$\text{Correct mg} = mg_s - mg_b \quad ,$$

where mg_s = mg found in front section of sample tube and

mg_b = mg found in front section of blank tube.

A similar procedure is followed for the backup sections.

10.2. Add the corrected amounts present in the front and backup sections of the same sample tube to determine the total measured amount (w) in the sample.

10.3. Convert the volume of air sampled to standard conditions of 25°C and 760 mm Hg.

$$V_s = V \times \frac{P}{760} \times \frac{298}{T + 273} \quad ,$$

where V_s = volume of air in L at 25°C and 760 mm Hg,

V = volume of air in L as calculated (sampling time × correct flow rate),

P = barometric pressure in mm Hg, and

T = temperature of air in °C.

10.4. The concentration of the organic solvent in the air sampled can be expressed in mg/m^3, which is numerically equal to μg/L of air.

$$mg/m^3 = \mu g/L = \frac{w\,(mg) \times 1000\,(\mu g/mg)}{V_s} \quad .$$

10.5. Another method of expressing concentration is ppm, defined as μL of compound vapor per liter of air.

$$ppm = \mu L \text{ of vapor}/V_s \quad ;$$

$$ppm = \frac{w\,(\mu g)}{V_s} \times \frac{24.45 \text{ L/mole}}{MW} \quad ,$$

where 24.45 L/mole = molar volume at 25°C and 760 mm Hg and

MW = molecular weight of the compound (g/mole).

11. Source Materials

11.1. G. O. Wood and R. G. Anderson, "Personal Air Sampling for Vapors of Aniline Compounds," *Am. Ind. Hyg. Assoc. J.* **36** 538-548 (1975).

11.2. G. O. Wood and J. W. Nickols, "Development of Air-Monitoring Techniques Using Solid Sorbents," Los Alamos Scientific Laboratory report LA-7295-PR (July 1978). Also available from the National Technical Information Services, Springfield, Virginia.

AROMATIC AMINES - A CHEMICAL SPOT TEST

Analyte: Aromatic Amine Compounds	**Method No.:** IH130
Matrix: Metal, painted, or concrete surfaces	**Sensitivity:** <100 ng/cm^2 on metal or painted surfaces; 5 μg/cm^2 on concrete surfaces
Procedure: Surface swipe followed by chemical spot test	**Precision:** Not applicable
Effective Date: 01/12/76 to 09/10/92	**Author:** Robert W. Weeks, Jr.

1. Principle of Method

1.1. A piece of filter paper is moistened with methanol and swiped across the surface suspected of being contaminated with aromatic amines.

1.2. Ehrlich's reagent (an acidified methanolic p-dimethylaminobenzaldehyde solution) is added to the filter paper, and the presence of aromatic amines is given by the formation of a yellow or an orange color.

2. Accuracy and Precision

2.1. As the method is designed to be qualitative or semiquantitative, the terms precision and accuracy are not applicable.

3. Interferences

3.1. Other primary amines, isocyanates, urethane paints that could undergo acid hydrolysis to amines, indoles, hydrazines, tryptophan, pyrroles, hydrogen peroxide, or phenols that are present on the surface being monitored could possibly interfere with this test.

3.2. Interferences may occur by transferring amino acids from the hands to the filter paper during handling. **It is important to handle the filter papers only with polyethylene-gloved hands** to avoid this possible source of contamination.

4. Advantages and Disadvantages

4.1. The method is sensitive, rapid, and very simple to use.

4.2. The method will allow rapid on-site detection of aromatic amines, compounds which in some cases are carcinogenic to man.

4.3. The principal disadvantage of the method is that it is not specific, and the existence of a positive spot test will require sampling and subsequent confirmation by laboratory analysis.

5. Apparatus

5.1. Bags: polyethylene, 5- by 7-in., or equivalent, with ties .

5.2. Black light: UVSL-25, or equivalent (Mineralight Ultraviolet Products, Inc., San Gabriel, California).

5.3. Filter paper: 7-cm-diam (Whatman No. 42, Whatman, Inc., Clifton, New Jersey).

5.4. Reagent bottle: 4-oz polyethylene with screw-on dropper nozzle.

5.5. Safety goggles.

5.6. Safety gloves: polyethylene, disposable (rubber gloves may cause interferences).

5.7. Spatula: metal, 15-20 cm in length.

6. Reagents

6.1. Use chemicals whose minimum purity is at least that of ACS reagent grade.

6.2. p-Dimethylaminobenzaldehyde (Ehrlich's reagent) solution.

6.2.1. Add 1.7 mL of concentrated hydrochloric acid to 100 mL of ethanol.

6.2.2. Dissolve 0.25 g of p-dimethylaminobenzaldehyde in the above ethanolic hydrochloric acid.

6.2.3. As prepared above, the shelf life of this reagent is greater than one year when stored at 23°C in a capped glass bottle.

7. Procedure

Note: Wear safety goggles and polyethylene gloves.

7.1. Formation of highly colored derivatives.

7.1.1. Metal or painted surfaces.

7.1.1.1. Place five drops of methanol upon the center of a 7-cm-diam filter paper and rub across approximately 500 cm^2 of the surface being monitored. **Apply pressure sufficient to ensure intimate contact, but do not tear paper. Remove paper from surface.**

7.1.1.2. Place three droplets of p-dimethylaminobenzaldehyde solution upon that area of the above filter paper used to swipe the monitored surface and also place a drop upon an area of the paper that has not contacted this surface. **(Do not touch bottle nozzle to paper.)** A blank adjacent to the test area is thus provided.

7.1.1.3. Allow paper to dry for 3 min and then examine both sides for color formation. The formation of a yellow or orange color (see Table I below), whose intensity is greater than its corresponding blank, indicates the possible presence of a cancer-suspect agent aromatic amine. Collect samples and submit them to an analytical laboratory for confirmation.

7.1.2. Concrete surfaces.

7.1.2.1. To form colored derivatives on concrete, place three drops of Ehrlich's reagent upon the concrete surface.

7.1.2.2. After 30 s reaction time, examine the surface for yellow-brown or orange-brown color.

7.1.2.3. If either color is present, collect a sample and submit it to an analytical laboratory for confirmation.

8. Source Materials

8.1. "Code of Federal Regulations," Title 29, Chapter XVII, Part 1910, *Federal Register* **39**, 20 (Part III), 3758-3797 (January 29, 1974).

8.2. F. Feigl (translated by R. E. Oesper), *Spot Tests in Organic Analysis* (Elsevier Publishing Co., New York, 1966), p. 243.

8.3. M. Roth, "Fluorescence Reaction for Amino Acids," *Anal. Chem.* **40**, 880-882 (1971).

8.4. W. Troll and E. Rinde, "Metabolism of Benzidine and Benzidine Azo Dyes," presented at National Cancer Institute Carcinogenesis Program, Third Annual Collaborative Conference, Orlando, Florida (February 2-5, 1975).

8.5. K. Imai, P. Bohlen, S. Stein, and S. Udenfriend, "Detection of Fluorescamine-Labeled Amino Acids, Peptides, and Other Primary Amines on Thin-Layer Chromatography," *Arch. of Biochem. Biophys.* **161**, 161-163 (1974).

TABLE I. COLOR OF P-DIMETHYLAMINOBENZ-ALDEHYDE DERIVATIVE FROM PAINTED OR METAL SURFACES

Cancer-Suspect Agent	Derivative Color
4,4′-Methylenebis(2-chloroaniline)	Yellow
Benzidine	Orange
3,3′-Dichlorobenzidine	Orange
alpha-Naphthylamine	Yellow
beta-Naphthylamine	Yellow
4-Aminobiphenyl	Yellow

8.6. D. B. Robinson, "Atmospheric Determination of Toluene Diisocyanate," *Amer. Indus. Hyg. Assoc. J.* **23**, 226-230 (1962).

8.7. J. D. Roberts and M. C. Caserio, *Basic Principles of Organic Chemistry* (W. A. Benjamin, Inc., New York, 1965), p. 686.

8.8. B. R. DasGupta and D. A. Boreff, "Quantitative Spectrophotometric Determination of Hydrogen Peroxide with *para*-Dimethylaminobenzaldehyde," *Anal. Chem.* **40**, 2060-2062 (1968).

8.9. G. J. Kapadia, J. R. Mosley, G. G. Kapadia, and T. B. Zalucky, "Color Reactions of 4-Alkylresorcinols and Some Naturally Occurring Phenolics with Ehrlich's Reagent," *J. Chromatogr.* **12**, 420-421 (1963).

8.10. G. J. Kapadia, J. R. Mosley, G. G. Kapadia, and T. B. Zalucky, "Structure-Chromogenic Activity Relation of Phenolic Compounds with Ehrlich's Reagent," *J. Pharm. Sci.* **54**, 41-48 (1965).

ARSENIC AND GALLIUM ON AIR FILTERS - IENA

Analyte: Arsenic and Gallium	**Method No:** IH135
Matrix: Filter	**Sensitivity:** 0.01 μg/filter
Procedure: Instrumental epithermal neutron activation (IENA)	**Precision:** ±10% above 1 μg/filter
Effective Date: 01/01/86 to 09/15/92	**Authors:** Ernest S. Gladney George H. Brooks

1. Principle of Method

1.1. Filters are irradiated in the epithermal neutron flux of the Omega West Reactor to activate As and Ga. Induced radioactivity is observed on large Ge(Li) or intrinsic Ge detectors multiplexed to 4096-channel pulse-height analyzers. All determinations are done instrumentally without the use of chemical separation.

1.2. Epithermal neutron activation reduces the intense levels of activity observed in thermal neutron activation from several elements commonly found in cellulose-based filters (e.g., Al, Mn, Cl, Na). This property provides an important advantage for the determination of certain elements that are preferentially activated by epithermal neutrons (i.e., those that possess significant neutron capture cross-sectional resonances in the epithermal region). Both As and Ga fall into this category.

2. Sensitivity

2.1. The detection limit (3 sigma above background) for cellulose-based filters is 0.01 μg/filter for both As and Ga. Lower detection limits can be achieved on cleaner Nuclepore filters (these are not currently being employed in the Los Alamos industrial hygiene program).

3. Accuracy and Precision

3.1. The results of in-house spiked quality control filter samples spiked between 3 and 20 ug/filter are shown in Table I. Mean recoveries of 107% ± 6% and 106% ± 5% were observed for As and Ga respectively.

3.2. The results of analyses of NBS SRM 2677, Beryllium and Arsenic on Filter Media, are shown in Table II. All results for arsenic are within the experimental uncertainty of the NBS certified values.

TABLE I. ARSENIC AND GALLIUM RESULTS ON HSE-9 QUALITY ASSURANCE AIR FILTERS (μg/FILTER)			
Element	**Measured**	**Spiked**	**Recovery (%)**
As	3.6 ± 0.7	3.0 ± 0.3	120
	4.2 ± 0.4	4.0 ± 0.4	105
	5.3 ± 0.5	5.0 ± 0.5	106
	6.6 ± 0.8	6.5 ± 0.6	102
	6.9 ± 0.7	6.5 ± 0.6	106
	10.3 ± 1.0	10.0 ± 1.0	103
		Mean ± Std Dev	107 ± 6
Ga	6.9 ± 1.0	6.0 ± 0.6	115
	8.1 ± 0.8	8.0 ± 0.8	101
	8.6 ± 1.0	8.2 ± 0.8	105
	8.8 ± 1.3	8.2 ± 0.8	107
	10.2 ± 1.0	10.0 ± 1.0	102
	21.6 ± 2.0	20.0 ± 1.0	108
		Mean ± Std Dev	106 ± 5

TABLE II. CONCENTRATION OF ARSENIC IN NBS SRM 2677 FILTER MEDIA		
Filter No.	**HSE-9 (μg/filter)**	**NBS (μg/filter)**
Series I	0.10 ± 0.01	0.103 ± 0.005
Series II	1.02 ± 0.09	1.07 ± 0.05
Series III	10.6 ± 0.8	10.5 ± 0.05
Blank	< 0.02	< 0.002

4. Interferences

4.1. Bromine provides the most severe interference problem. Bromine is a common constituent of cellulose-based filters and activates readily with epithermal neutrons. Nuclepore filters are relatively free of bromine interference.

4.2. Bromine has gamma rays at 554 and 828 keV that can easily be mistaken for the 559 keV As-76 and 834 keV Ga-72 lines. The problem is illustrated in Fig. 1(a-f). Figure 1(a) shows a pure 559 keV As-76 standard on filter paper. Figure 1(b) shows an actual sample filter containing significant amounts of As as well as the Br-82 background. Figure 1(c) illustrates the potential identification problem encountered when careful attention is not paid to energy calibration. The spectrum contains a large 554 keV Br-82 line and almost detection limit quantities of As-76. Figure 1(d) shows a pure 834 keV Ga-72 standard on filter paper. Figure 1(e) shows an actual sample filter

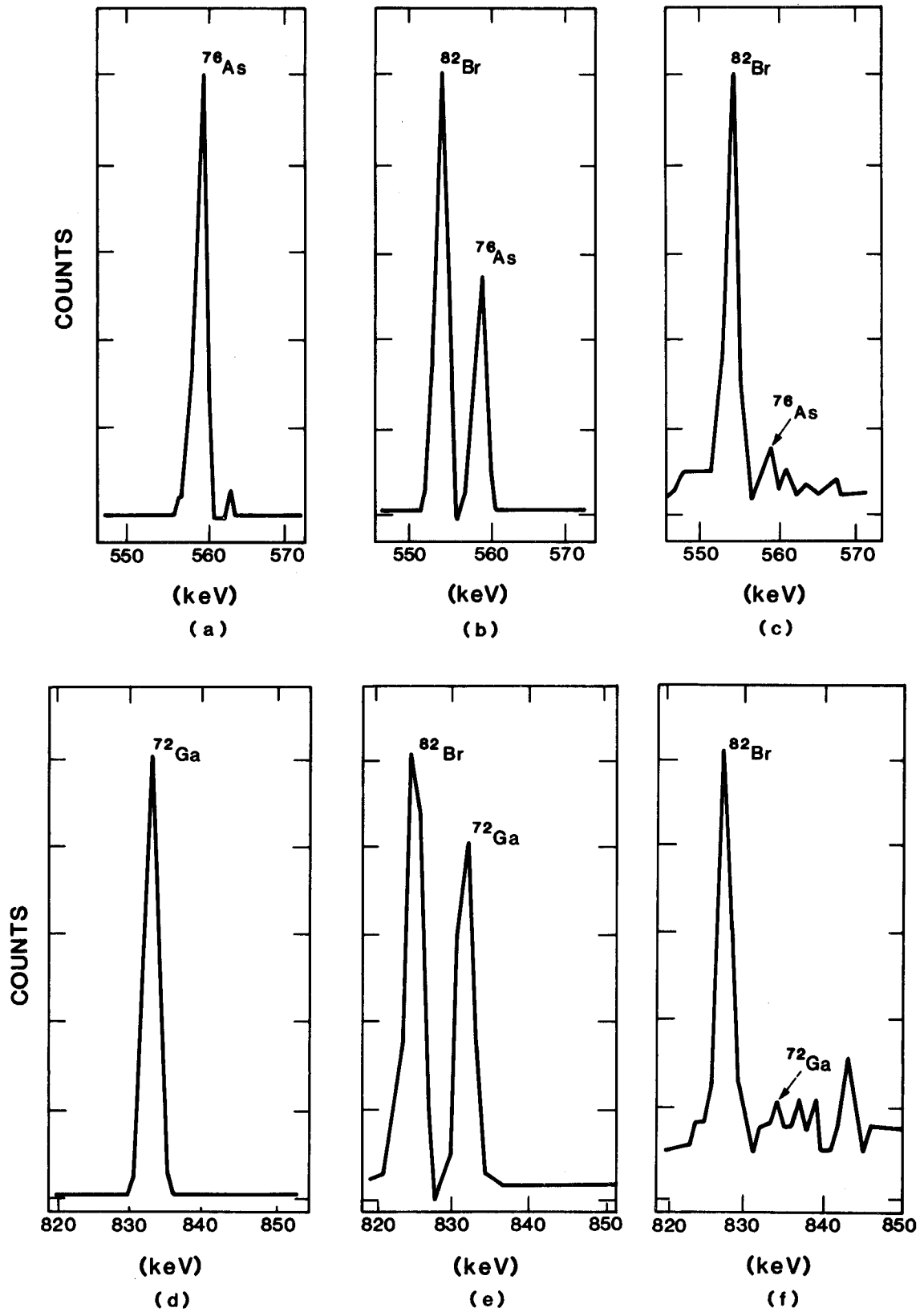

Fig. 1. Gamma-ray spectra of arsenic and gallium on filter media.

containing significant amounts of Ga as well as the Br background. Figure 1(f) contains a large Br-82 line and almost no Ga-72. Careful energy calibration of the gamma-ray spectrometer will minimize this problem.

4.3. Intense bromine activity raises the Compton background in the detector and decreases the sensitivity.

4.4. Antimony-122 has a gamma ray at 561 keV that can overlap the 559 keV As-76 line if Sb is much more abundant than As. Since Sb has a longer half-life than As, longer decay periods do not help. Careful tuning of the gamma-ray spectrometer to achieve high resolution will minimize the problem.

4.5. Manganese-54 from the Fe-54(n,p)Mn-54 reaction will produce a direct spectral interference at the 834 keV Ga-72 line. Because the Mn-54 has a much longer half-life than Ga-72, the normal procedure is to recount the sample in exactly the same geometry on the same detector about one week later and subtract the 834 keV activity on this later count (now due exclusively to Mn-54) from the total 834 keV activity observed earlier. The Ga concentrations are then calculated on the resulting net 834 keV activity. Because the cross section for this interfering reaction is small relative to that for Ga-71(n,gamma)Ga-72, this correction is rarely needed for filter materials. It is commonly required for geologicals or air particulates of crustal origin (soil) because Fe is much more abundant than Ga in most natural silicate materials.

5. Collection and Storage of Samples

5.1. Whatman or Nuclepore filters are the preferred collection media. They are easy to handle, have reasonably low blanks, and suffer little embrittlement during neutron bombardment. Millipore filters can be used, but their brittle nature makes them hard to package for irradiation, and they tend to crumble into highly electrostatically charged fragments during neutron irradiation.

5.2. Glass fiber filters should not be used because of the high blank levels of many elements.

5.3. There are no special storage requirements.

6. Apparatus

6.1. Pipettes with disposable tips: Eppendorf, 50-, 500-, and 1000-μL.

6.2. Vials: 25-mL, plastic scintillation, acid-washed.

6.3. Vials: polyethylene, snap-cap, Beem Size No. 3 (small), Ladd Research, Burlington, Vermont.

6.4. Vials: polyethylene, 4-cm^3, Omega West Reactor irradiation "rabbits."

6.5. Filter paper: 4.25-cm-diam, Whatman.

6.6. Filter supports: polyethylene caps from 250-mL Nalgene bottles.

6.7. Tweezers: stainless steel.

6.8. Volumetric flasks: 10- and 100-mL.

6.9. Polyethylene film: 1-mil-thick, 1.5-in. flat, tubing.

6.10. Nuclear reactor: Los Alamos Omega West Reactor, with boron-filtered epithermal irradiation facility.

7. Reagents

7.1. Nitric acid (concentrated, reagent-grade).

7.2. Arsenic standard solution (1000 ppm): Spex Industries, Inc., Metuchen, New Jersey.

7.3. Gallium standard solution (1000 ppm): Spex Industries, Inc., Metuchen, New Jersey.

7.4. Gold standard solution (1000 ppm): Spex Industries, Inc., Metuchen, New Jersey.

7.5. Distilled water (highest purity available).

8. Calibration and Standards

8.1. Prepare three working standards.

8.1.1. Pipette 1 mL of concentrated As stock and 1 mL of concentrated Ga stock into an acid-washed plastic scintillation vial. This standard is 500 ppm of each metal.

8.1.2. Pipette 500 µL of each concentrated stock into a 10-mL volumetric flask and dilute to volume with distilled water. This standard is 50 ppm of each metal.

8.1.3. Pipette 500 µL of each concentrated stock into a 100-mL volumetric flask and dilute to volume with distilled water. This standard is 5 ppm of each metal.

8.2. Prepare at least three filter standards at each concentration.

8.2.1. Place 250-mL polyethylene bottle caps upside down and insert a new 4.25-cm Whatman filter into each cap. Carefully pipette 50 µL of each working standard solution onto separate filters, spotting the drops uniformly about the face of the filter. Be sure that no liquid touches the edge or the filter holders. Discard any filters where liquid touches the holder and wash the holder in 7 N nitric acid. Prepare several filter blanks to check for As and Ga background in the standards.

8.2.2. Air dry the standard filters, roll to fit the Beem vials, insert individually, and close the snap-cap lids.

8.3. Simultaneously irradiate the standards and the sample filters.

8.4. Prepare flux monitors for each irradiation rabbit.

8.4.1. Place 250-mL polyethylene bottle caps upside down and insert a new 4.25-cm Whatman filter into each cap. Carefully pipette 50 μL of concentrated gold stock solution onto separate filters, spotting the drops uniformly about the face of the filter. Be sure that no liquid touches the edge or the filter holders. Discard any filters where liquid touches the holder and wash the holder in 7 N nitric acid.

8.4.2. Air dry the flux monitor filters, roll to fit the Beem vials, insert individually, and close the snap-cap lids.

9. Procedure

9.1. Sample packaging.

9.1.1. Fold samples to fit Beem vials, insert individually, and close the snap-cap lids. Number outside of Beem vials with black "Sharpie" marker, which has a very low trace element background.

9.1.2. Insert two samples and one gold flux monitor into an irradiation rabbit, noting the positions of the samples in a Laboratory notebook. Always place the flux monitor in last. Fill the remaining space in the rabbit with polyethylene film material. Because flux gradients in the epithermal irradiation facility can be severe, each irradiation position within the rabbit must be calibrated separately.

9.1.3. Package standards in the same manner as samples. Place a flux monitor in the same position in each rabbit.

9.2. Irradiate the rabbits one at a time in the epithermal facility of the Los Alamos Omega West Reactor for 15 min. Be sure to record the time at the end of irradiation.

9.3. Count all samples the next day at the face of high-resolution Ge(Li) or intrinsic Ge gamma-ray detectors, multiplexed to 4096-channel pulse-height analyzers. Store the gamma-ray spectra on disc for off-line data reduction. Note beginning-of-count time, detector, counting geometry, and computer file number in a Laboratory notebook.

NOTE: Data reduction is simplified if all samples from the first irradiation position are counted in the same geometry on the same detector and the samples from the second irradiation position are counted in the same geometry on the same detector.

9.4. Count all standards from the first irradiation position in the same geometry and detector as samples from the first position. Treat the standards from the second irradiation position in the same manner as the samples from that irradiation position.

9.5. Flux monitors may be counted on any detector but they must **ALL** be counted in the **SAME** geometry on the **SAME** detector.

9.6. Counting times may vary with the activities of the samples. Count until 10 000 counts are observed in the gamma-ray lines of interest, or for 1000 s, whichever is shorter. Flux monitors normally require only 5-min counts.

10. Operation of the Instrument

10.1. See gamma-ray spectrometry instrument procedure.

11. Calculations

11.1. The 559 keV gamma ray from As-76 and the 834 keV gamma ray from Ga-72 are numerically integrated in each spectra, using the HSE-9 GAMS computer program for digital integration of gamma-ray spectra. Quantitation may be approached in two ways.

11.2. Multi-point calibration method.

11.2.1. Correct each gamma-ray peak for decay from beginning-of-count back to time-out-of-reactor and for variations in neutron flux using

$$B = A[e^{L(t_1 - t_2)}]/F \quad ,$$

where A = integrated peak area,

B = decay corrected peak area,

L = decay constant (0.693/half-life of isotope),

t_1 = beginning-of-count time,

t_2 = time-out-of-reactor time, and

F = decay corrected peak area from gold flux monitor.

11.2.2. Plot standard curves on 3-cycle log-log graph paper with the element concentration on the x-axis and the net peak area on the y-axis. Fit the curve to the data using least-squares or linear regression techniques.

11.2.3. Read the sample concentrations from the calibration curve using the decay and flux corrected net peak areas.

11.3. Since neutron activation is linear over 3-4 orders of magnitude of concentration, single point calibration methods may be used if one is careful to determine the range of linearity through experience.

11.3.1. All calculations may be done in a single equation using only one standard concentration:

$$Z = \frac{(B_1)\ (C)\ (F_2)}{(B_2\ (F_1)} \quad ,$$

where Z = final elemental concentration (μg/filter),

B_1 = decay corrected sample peak area,

B_2 = decay corrected standard peak area,

C = standard concentration (μg/filter),

F_1 = decay corrected sample flux from gold flux monitor, and

F_2 = decay corrected sample flux from gold flux monitor.

Decay corrections use the following equation:

$$B = A[e^{L(t_1 - t_2)}] \quad ,$$

where A = integrated peak area,

B = decay corrected peak area,

L = decay constant (0.693/half-life of isotope),

t_1 = beginning-of-count time, and

t_2 = time-out-of-reactor time.

12. Source Materials

12.1. E. S. Gladney, D. B. Curtis, D. R. Perrin, J. W. Owens, and W. E. Goode, "Nuclear Techniques for the Chemical Analysis of Environmental Materials," Los Alamos Scientific Laboratory report LA-8192-MS (January 1980).

12.2. L. E. Wangen and E. S. Gladney, "Determination of Arsenic and Gallium in Standard Materials by Instrumental Epithermal Neutron Activation Analysis,"*Analytica Chimica Acta* **96**, 271-277 (1978).

12.3. E. S. Gladney, D. R. Perrin, J. P. Balagna, and C. L. Warner, "Evaluation of a Boron-Filtered Epithermal Neutron Irradiation Facility," *Analytical Chemistry* **52**, 2128-2132 (1980).

12.4. National Bureau of Standards, Certificate of Analysis, SRM 2677, Beryllium and Arsenic on Filter Media (1985).

ASBESTOS FIBERS IN AIR

Analyte: Asbestos fibers	**Method No.:** IH140
Matrix: Air	**Range:** 0.1-60 fibers/mL
Procedure: Filter collection, optical microscopic count	**Precision** (CV_T): 0.11 to 0.41
Effective Date: 03/30/77 to 01/06/92	**Contact Persons:** Larry Ortiz Stuart D. Nielsen

1. Principle of Method

1.1. This method describes the equipment and procedures for mounting and counting asbestos fibers on cellulose ester membrane filters in the evaluation of personal samples of airborne asbestos fibers. The purpose of the method is to determine an employee's index of exposure to airborne asbestos fibers. The method is primarily a personal monitoring technique but can also be used for area monitoring.

1.2. The sample is collected by drawing air through a membrane filter with a battery-powered personal sampling pump. The filter is transformed from an opaque solid membrane to a transparent optically homogeneous gel. The fibers are sized and counted using a phase-contrast microscope at 400-450X magnification.

1.3. Definitions. Asbestos fiber, for counting purposes, means a particulate that has a physical dimension longer than 5 μm and a length-to-diameter ratio of 3 to 1 or greater. Asbestos includes chrysotile, cummingtonite-grunerite (amosite), crocidolite, fibrous tremolite, fibrous anthophyllite, and fibrous actinolite.

1.4. Any laboratory attempting to use this procedure should have at least one counter attend a training course conducted by an experienced, proficient laboratory. Novice, untutored counters, using only published instructions, can easily obtain counts of only one-half those obtained by experienced, proficient counters. Large differences between laboratories can be caused by 1) differences in technique and observing ability among counters and 2) small, but significant, differences between microscopes meeting the basic specifications of Section 5.1. The following procedures are recommended:

1.4.1. All microscopists who perform asbestos counting should meet for an "asbestos counting workshop" at least quarterly. This is best accomplished with counters from several laboratories using their own microscopes.

1.4.2. Each microscopist should count the same series of slides and the results should be compared.

1.4.3. Differences between counters should be resolved with side-by-side counting of the fields by the different counters.

2. Range and Sensitivity

2.1. The usable range is primarily a function of sample volume, microscope count field area, and background airborne particulates. The minimum total fiber count in 100 fields considered adequate for reliable quantitation is ten fibers.

2.2. This method considers only fibers with a length-to-diameter ratio of 3 to 1 or greater and a length greater than 5 μm.

3. Interferences

In an atmosphere known to contain asbestos, all particulates with a length-to-diameter ratio of 3 to 1 or greater and a length greater than 5 μm should, in the absence of other information, be considered to be asbestos fibers and counted as such.

4. Accuracy and Precision

4.1. Sources of variation in the counting procedure.

4.1.1. Random variations exist in the fiber distribution of a filter wedge (intrawedge variability). The industrial hygiene literature has seen considerable debate in the last 20 years concerning whether or not the distribution of mineral dust or asbestos fibers on a filter surface is adequately described by a Poisson distribution probability density function. Leidel and Busch (10.3.) found excellent agreement between empirical error variance and theoretical variance calculated from the assumption of Poisson distributed true counts. They concluded that there was not excessive variation among count fields for a filter wedge and that clumping of fibers (nonrandom coalescence) did not occur.

4.1.2. Variations exist in the fiber distribution on the total filter surface (interwedge variability) due to the random or nonrandom distribution of fibers across the total surface of the filter. This type of variation is easily confused with intrawedge variations. The count procedure does not require counting of multiple sectors of the filter. There may be significant differences between average counts for different wedges, or the fiber distribution variations for the total filter surface may be greater than the variations of the Poisson distribution. If either of these occurs experimentally, one must use the experimental variations to estimate the minimum precision of the count procedure. The minimum precision is governed by the variation of the fiber distribution on the total surface of the filter.

Conway and Holland (10.2.) concluded that the distribution of fibers on filters is not uniform and that the distribution of fiber counts is more disperse than Poisson. For their filters, which had significant variations in fiber concentrations between sectors (as much as 50-60% of the total filter mean), they described the following relation for the standard deviation of the total number of fibers counted on a wedge (N):

empirical $s(N) = 1.6\,(N)^{1/2}$

where N is about 100. The Poisson standard deviation would be

Poisson $\sigma(N) = (N)^{1/2}$.

Rajhans and Bragg (10.5.), in Series I of their study, found significant variation between filter segments and rejected the Poisson distribution for the filter surface. However, in Series II of their study, utilizing various experimental modifications, they found no significant variation between filter segments and no reason to reject the assumption of Poisson distributed fiber counts.

Hook, Feigley, and Ludwig (10.14.) found that the primary cause of fiber variation on the filters is the design of the cassette, the trench pattern of the cassette probably causing an uneven distribution of airflow through the filter. The radial trenches cause significant differences between wedges, and the two circular trenches appear to cause different deposition patterns within each wedge. However, they conclude that, because the pattern of fiber deposition is affected by many factors, counting exclusively on-trench or off-trench wedges would not be of significant benefit.

4.1.3. Systematic variations because of differences between microscopes were studied by Leidel and Busch (10.3.). In their study using five different brands of microscopes, they found no significant differences among four, but the fifth gave counts approximately 45% higher on the average than the other four.

4.1.4. Variations because of differences between counters should be examined at three levels: experienced counters occasionally counting, experienced counters routinely counting, and inexperienced (new or untutored) counters. Leidel and Busch (10.3.) studied five experienced counters and three inexperienced counters. They found statistically significant differences between the means of both the experienced and inexperienced counters that typically were in the range ±5-15%. They concluded that experience as a fiber counter is not a significant parameter affecting intercounter variations.

Rajhans and Bragg (10.5.) found no significant differences among means of five experienced counters in Series I of their study. But in their carefully controlled Series II, an analysis of variance showed significant variations among counters that were in the range ±1-15%.

4.2. Until recently, the total coefficient of variation (CV_T) for the sampling and counting procedure was best estimated from the work of Conway and Holland (10.2.). The conclusions of their study included:

4.2.1. The precision of their procedure for filters not containing an abundance of fine fibers can be estimated by a coefficient of variation of 16.2%. This value includes variation among counters and observed interaction effects.

4.2.2. The accuracy of the procedure for similar filters may be estimated for a 100-fiber count by a coefficient of variation of 21.4%. This assumes that the contribution of the overall variance from the nonuniform fiber distribution is additive.

4.2.3. A high percentage of very fine fibers on the filter can significantly affect the standard deviation and confidence limits for counts by different counters. After combining variations in fiber concentrations over the entire filter with those for different counters, it was concluded:

4.2.3.1. For filters with a low concentration of fine fibers, the coefficient of variation is estimated at 21% and the 95% confidence interval is ±43%.

4.2.3.2. For filters with a high concentration of fine fibers, the coefficient of variation is estimated at 25% and the 95% confidence interval is ±50%.

4.2.4. The Johns-Manville Corporation conducted an in-house investigation of the asbestos count method (10.9.). The study data contained total fiber counts for over 100 filters with each filter counted by two to five counters. From the Johns-Manville data, NIOSH calculated over 100 estimates of the count CV for the method (10.10.). The NIOSH CV estimates included random intrafilter variations and intercounter variations but did not include random pump flow rate variations. It was found that the count coefficient of variation (all random variations except for pump variations) was a function of the total fiber count. NIOSH then included a CV of 0.05 for random pump variations in the CV-estimator equation to obtain a CV_T-estimator. The CV_T-estimator line is plotted on Fig. 1 for total fiber counts in the range of 10 to 100 fibers, or the following equation can be used:

$$CV_T = [(CV'_F)^2 + (0.05)^2]^{1/2} \quad ,$$

where $CV'_F = \text{antilog}_{10}[0.0595 - 0.3241(\log FB) - 0.0158(\log^2 FB)] - 0.12$

FB = total fiber count as discussed in Section 9.

Figure 1 demonstrates that, for a total count of 100, the best CV_T is attainable with the appropriate sampling times and the count rules in 8.2.9. When making decisions regarding compliance with the OSHA asbestos exposure standards in 29 CFR 1910.1001, the statistical procedures given in Busch et al. (10.10.) should be followed. The procedures are based on statistical theory and assumptions given in Source Materials 10.11. and 10.12.

Because of the possibility of systematic biases caused by differences between microscopes, counters, and laboratories as discussed above, it is strongly recommended that any laboratory counting asbestos should participate in an interlaboratory quality control program that includes the counting of standard reference filters. These standard filters are available from NIOSH through the

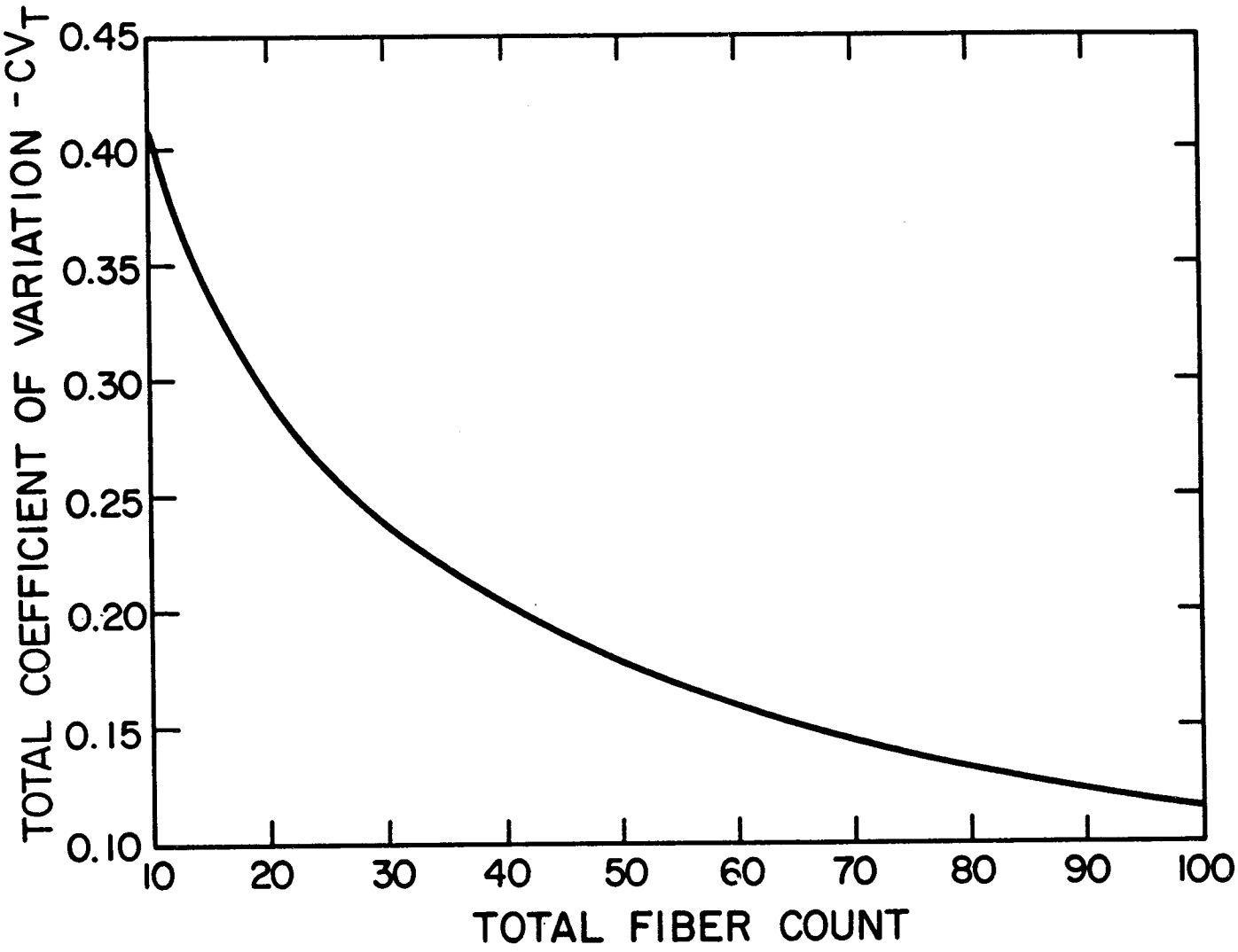

Fig. 1. Total coefficient of variation as a function of total fiber count (including pump error).

Proficiency Analytical Testing (PAT) Program. The PAT Program is used by the American Industrial Hygiene Association (AIHA) as part of its Laboratory Accreditation Program. Each laboratory's quality control program must include procedures for routinely adjusting and calibrating sampling and counting equipment plus training and evaluation programs for counters.

5. Apparatus

5.1. Optical equipment and microscope features.

5.1.1. Microscope body with binocular head.

5.1.2. Huygenian 10X eyepieces are recommended. Other eyepieces can be substituted if necessary. Wide field eyepieces can be used; however, wide field eyepieces may yield a count field area less than 0.003 mm^2 with the Porton reticle. This is not always desirable from the standpoint of obtaining optimum sampling times. If wide field eyepieces are used, it is preferable to use the Patterson Globe and Circle reticle to obtain a larger count field area.

5.1.3. Koehler illumination (preferably built-in with provisions for adjusting light intensity).

5.1.4. A Porton reticle is recommended. Others such as the Patterson Globe and Circle can be substituted.

5.1.5. Mechanical stage.

5.1.6. Phase-contrast condenser with a numerical aperture (N.A.) equal to or greater than the N.A. of the objective.

5.1.7. Phase contrast achromatic objective 40-45X (N.A. 0.65-0.75).

5.1.8. Phase-ring centering telescope or Bertrand lens.

5.1.9. Green or blue filter, if recommended by microscope manufacturer.

5.1.10. Stage micrometer with 0.01 mm subdivisions.

5.2. Filter mounting equipment. Experience has shown that certain equipment is useful for efficient sample mounting. The following items are recommended for extracting and mounting a portion of the filter for counting:

5.2.1. Microscope slides: 2.5- by 7.5-cm glass slides are most commonly used. Sample number, data, initials, etc., can be conveniently written on a frosted end slide.

5.2.2. Cover slips: a necessary part of the slide mount and optical system. The shape should be appropriate for the size of the filter wedge. The appropriate cover slip depends upon the objective to be used. Ordinarily, objectives are optically corrected for a No. 1-1/2 (0.17 mm) thickness cover slip. Improper cover glass thickness will detract from the final image quality.

5.2.3. Scalpel: to cut out a portion of the filter to be examined. A number ten curved-blade scalpel is recommended.

5.2.4. Tweezers: fine-tipped to remove the membrane filter slice from the field monitor and place it upon the slide.

5.2.5. Lens tissue: lint-free tissue is recommended. This tissue should also be used for wiping mounting tools and for cleaning slides and cover slips.

5.2.6. Wheaton balsam bottle: This special glass container has a glass top that prevents contamination of the mounting solution. A glass rod is included for dispensing the solution.

6. Reagents

6.1. Dimethyl phthalate.

6.2. Diethyl oxalate.

NOTE: Avoid getting the mounting solution on the skin. Wash skin promptly with soap and water if skin contact occurs.

7. Calibration and Standards

7.1. Microscope setup.

7.1.1. Porton reticle and the counting field. The asbestos fiber count procedure consists of comparing fiber length to the diameters of calibrated circles of a Porton reticle and counting all fibers greater than 5 μm in length lying within a given counting field area. The Porton reticle is a glass plate inscribed with a series of circles and rectangles. The left half of the reticle is divided into six rectangles constituting the counting field. The counting field is illustrated in Figs. 2 through 7.

7.1.2. Placement in eyepiece. The Porton reticle is placed inside the Huygenian eyepiece where it rests on the field-limiting diaphragm. If other types of eyepieces are used, it may be necessary to insert a counting collar for retaining the reticle. The reticle should always be kept clean, because dirt on the reticle is in focus and could complicate the counting and sizing process.

7.1.3. Stage micrometer. The Porton reticle cannot be used for counting until it has been properly calibrated with a stage micrometer. Most stage micrometer scales are approximately 2 mm long and are divided into units of .01 mm (10 μm).

7.1.4. Microscope adjustment. When adjusting the microscope, follow the manufacturer's instructions while observing the following guidelines:

7.1.4.1. The light source image must be in focus and centered on the condenser iris or annular diaphragm.

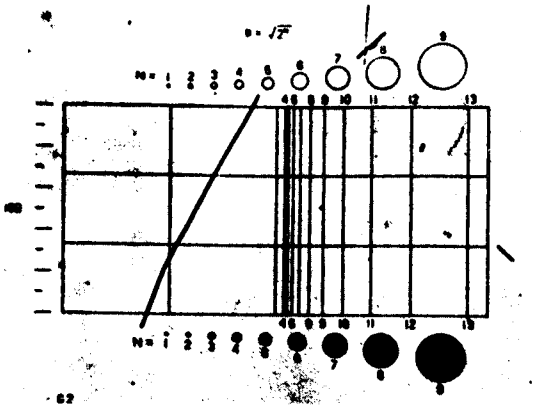

Fig. 2. **DO NOT COUNT.**
Fiber crosses top and bottom sides.

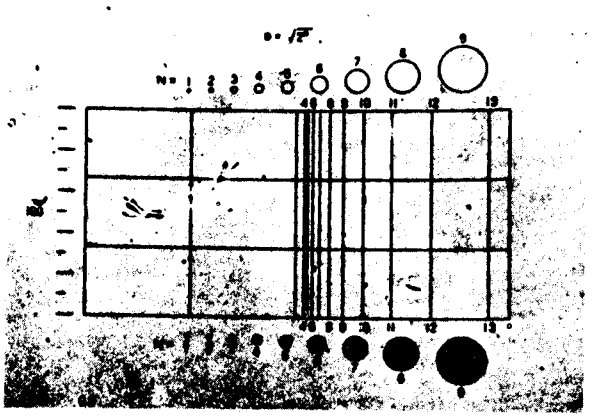

Fig. 3. **COUNT.** One fiber.

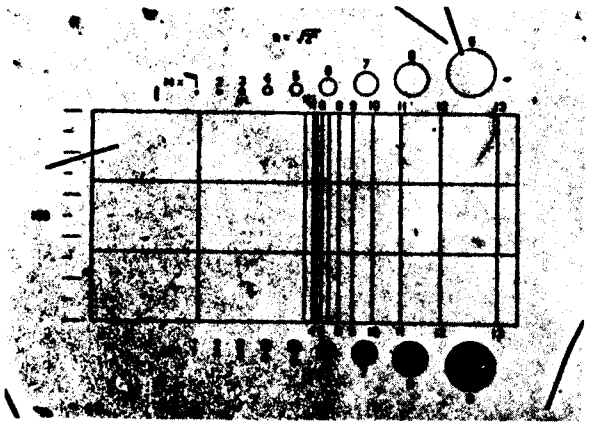

Fig. 4. **COUNT.** One-half fiber. Fiber crosses left side and one end lies within count area.

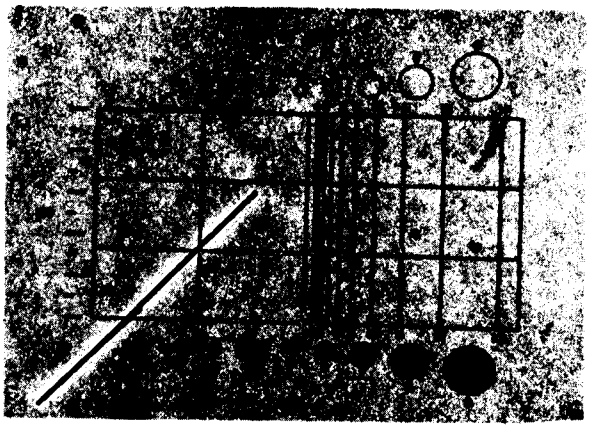

Fig. 5. **COUNT.** One-half fiber. Fiber crosses bottom side and one end lies within count area.

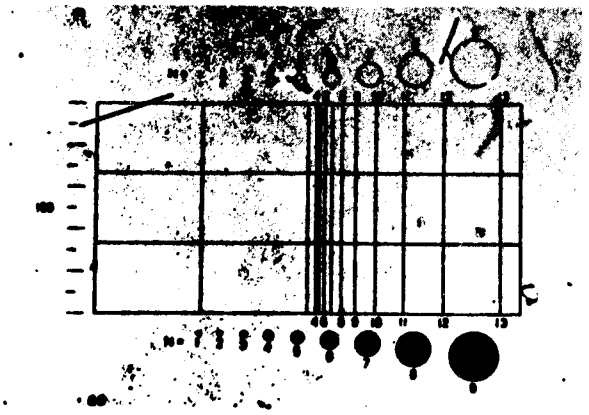

Fig. 6. **DO NOT COUNT.**
Fiber crosses two sides.

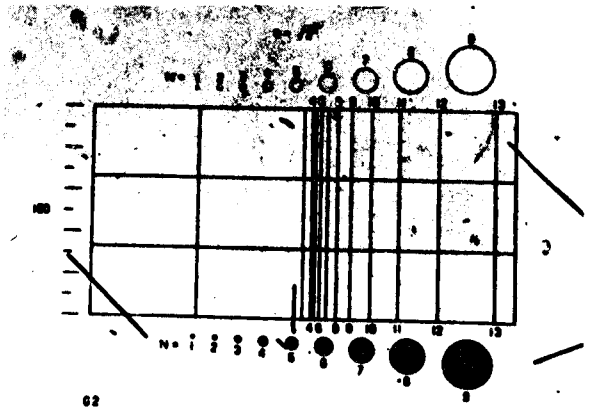

Fig. 7. **DO NOT COUNT.** Fiber crosses two sides (bottom left corner). **COUNT.** One-half fiber. Fiber crosses bottom side and one end lies within count area. **COUNT.** One fiber (top right corner).

7.1.4.2. The particulate material to be examined must be in focus.

7.1.4.3. The illuminator field iris must be in focus, centered on the sample, and opened only to the point where the field of view is illuminated.

7.1.4.4. The phase rings (annular diaphragm and phase-shifting elements) must be concentric.

7.1.5. Porton reticle calibration procedure.

7.1.5.1. Each eyepiece-objective-reticle combination on the microscope must be calibrated. Should any of the three be changed (disassembly, replacement, zoom adjustment, etc.), the combination must be recalibrated. Calibration may change if interpupillary distance is changed.

7.1.5.2. For proper calibration, follow this procedure closely. With a 10X objective in place, place the stage micrometer on the mechanical stage, focus the mm scale, and center the image. Change to the 40-45X objective and adjust the first mm scale division to coincide with the left boundary of the Porton rectangle. Measure the distance between the left and extreme right boundaries of the Porton rectangle, estimating any portion of the final division. This measurement represents 200 L units. The rectangle is 100 L units on the short vertical dimension. The calculated L is inserted into the formula $D = L(2^N)^{1/2}$ where N is the circle number (indicated on the reticle) and D is the circle diameter. Since the circle diameters vary logarithmically, every other circle doubles in diameter. For example, Circle No. 3 is twice the diameter of No. 1; No. 4 is twice the diameter of No. 2. When the circle sizes have been determined, the counting field area that consists of the left six smaller rectangles can be calculated from the relation $10{,}000\ L^2$. This completes the reticle calibration for this specific objective-eyepiece-reticle combination.

7.1.5.3. Example for Porton reticle. The following calibration was obtained for a pair of 10X Huygenian eyepieces and a 43X objective:

$200\ L = 0.148\ mm = 148\ \mu m;$

$100\ L = 0.074\ mm = 74\ \mu m;$

One L-unit $= 0.74\ \mu m.$

Thus, Circle No. 1 has a diameter $D = L(2^N)^{1/2}$

$= 0.74\ (2^1)^{1/2} = 0.74\,(1.414) = 1.05\ \mu m.$

The circle diameter calibration table is as follows:

Diameter of Circle No. 1 = 1.05 μm;

No. 2 = 1.48 μm;

No. 3 = 2.09 μm;

No. 4 = 2.96 μm;

No. 5 = 4.19 μm;

No. 6 = 5.92 μm.

Field area = (10,000) (L^2)

= (100 L) (100 L)

= (0.074 mm) (0.074 mm)

= 0.0055 mm^2.

Thus, fibers with a length greater than a distance halfway between the diameters of the No. 5 and No. 6 circles would be counted.

7.1.5.4. If a Patterson Globe and Circle reticle is used, a different calculation procedure is required. The circle diameters are related as follows. The No. 25 circle diameter is (0.1) (reticle length). The circle diameters are proportional to the ratio of their numbers. Thus, the No. 20 circle diameter is (20/25) or 0.8 times the No. 25 circle diameter.

8. Procedure

8.1. Sample preparation.

8.1.1. Preparation of mounting solution.

8.1.1.1. A very important part of the sample evaluation is the mounting process. This process involves a special mounting medium of prescribed viscosity and refractive index. The proper viscosity is important in order to expedite filter dissolving and still minimize particle migration. After the sample has been mounted, an elapsed time of approximately 60 min is needed before the sample is ready for evaluation.

8.1.1.2. Combine the dimethyl phthalate and diethyl oxalate in a one-to-one ratio by volume and pour into a Wheaton balsam bottle. Add approximately 0.05 (±0.005) g of new membrane filter per mL of solution to reach the necessary viscosity. The mixture must be stirred periodically until the filters have dissolved and a homogeneous mixture is formed. The normal shelf life of the mounting solution is about 3 months. Twenty mL of mounting solution will prepare approximately 300 samples.

8.1.2. Sample mounting. Cleanliness is important. A dirty working area may result in sample contamination and erroneous counts. Follow these steps when mounting a sample:

8.1.2.1. Clean the slides and cover slips with lens tissue. Lay each slide down on a clean surface with the frosted end up. It is a good practice to rest one edge of the cover slip on the slide and the other edge on the working surface. By doing this, you keep the bottom surface (the one that contacts the filter) from becoming contaminated.

8.1.2.2. Wipe all of the mounting tools clean with lens tissue and place them on a clean surface (such as lens tissue). All tools should be wiped clean before mounting each sample.

8.1.2.3. Using the glass rod supplied with the Wheaton balsam bottle, apply a drop of mounting solution to the center of the slide. It may be necessary to adjust the quantity of solution so that, after the cover slip has been placed on top, the solution extends only slightly beyond the filter boundary. If the quantity is greater than this, particle migration may occur.

8.1.2.4. Using another glass rod, spread the mounting media into a triangular shape. The size of this triangle should coincide with the dimension of the filter wedge.

8.1.2.5. Separate the middle and bottom sections of the field monitor case to expose the filter. Cut a triangular wedge from the center to the edge of the filter using the scalpel. The size of the wedge should approximate one-eighth of the filter surface. The filter can be very carefully removed from the cassette for cutting, but this should only be done with great care.

8.1.2.6. Grasp the filter wedge with the tweezers on the perimeter of the filter that was clamped between the monitor case sections. **Do not touch the filter with your fingers**. Place the wedge, sample side up, on the mounting medium.

8.1.2.7. Pick up a clean cover slip with tweezers and carefully place it on the filter wedge. Once this contact has been made, do not reposition the cover slip.

8.1.2.8. Label the slide with the sample number and current date before proceeding to the next filter. On the bottom (backside) of the slide, trace the perimeter of the filter wedge with a felt-tip marking pen. This will enable the counter, after the filter has become transparent, to stay within the filter perimeter when counting.

8.1.2.9. The sample should become transparent within 15 min. If the filter appears cloudy, it may be necessary to press very lightly on the cover slip. This is rarely necessary; however, counting should not be started until 1 h after the mounting. This allows the microscopic texture of the filter to become invisible to microscope viewing.

8.1.2.10. Discard the sample mount after two days if it has not been counted. Crystals appearing similar to asbestos fibers may begin to grow at the mounting media/air interfaces. They seldom present any problems if the slide is examined before two days. In any case, stay away from the filter's edges when counting and sizing.

8.2. Counting of fibers.

8.2.1. Place the slide on the mechanical stage of the microscope and position the center of the wedge under the objective lens and focus upon the sample. Start counting from one end of the wedge and progress along a radial line to the other end (count in either direction from perimeter to wedge tip). Random fields are selected, without looking into the eyepieces, by slightly advancing the slide in one direction with the mechanical stage control.

8.2.2. It is essential to continually scan over a range of focal planes (generally the upper 10 to 15 μm of the filter surface) with the fine focus control during each field count. This is especially necessary for asbestos fibers because of their impaction into the filter matrix.

8.2.3. On most airborne samples, asbestos fibers will generally have fiber diameters less than 1 μm. Therefore, it is necessary to look carefully for faint fiber images.

8.2.4. Regularly check phase-ring alignment.

8.2.5. When an agglomerate (mass of material) covers a significant portion of the field of view (approx 1/6 or greater), reject the field and select another. (Do not include it in the number of fields counted). However, report the fact as it may have meaning on other data collection.

8.2.6. Bundles of fibers are counted as one fiber unless both ends of the fiber can be clearly resolved.

8.2.7. Count only fibers with a length-to-width ratio greater than or equal to 3:1.

8.2.8. Count only fibers greater than 5 μm in length. (Be as accurate as possible in accepting fibers near this length.) Measure curved fibers along the curve to estimate the total length.

8.2.9. Count as many fields as necessary to yield a total count of at least 100 fibers. Exceptions: a) count at least 20 fields even if you count more than 100 fibers and b) stop at 100 fields even if you haven't reached 100 fibers.

8.2.10. For fibers that cross either one or two sides of the counting field, the following procedure is used to obtain a representative count:

> **COUNT** any fiber greater than 5 μm in length that lies entirely within the counting area. **COUNT** as 1/2 fiber any fiber with only one end lying within the counting area. **DO NOT COUNT** any fiber crossing any two sides.
>
> Reject and do not count all other fibers. Refer to Figs. 2 through 7. Note that the fibers in Figs. 2 through 7 are not representative of the appearance of most asbestos fibers. Most fibers have a very faint image.

9. Calculations

9.1. The average airborne asbestos fiber concentration estimated by the filter sample may be calculated from the following formula:

$$AC = \frac{[(FB/FL) - (BFB/BFL)]\ (ECA)}{(1000)\,(FR)\,(T)\,(MFA)} ,$$

where AC = airborne fiber concentration in (fibers >5 μm)/mL,

BFB = total number of fibers counted in the BFL fields of the blank or control filters in fibers >5 μm,

BFL = total number of fields counted on the blank or control filters,

ECA = effective collecting area of filter (855 mm^2 for a 37-mm filter with effective diameter of 33 mm),

FR = pump flow rate in liters/min,

FB = total number of fibers counted in the FL fields in fibers >5 μm,

FL = total number of fields counted on the filter,

MFA = microscope count field area in mm^2 (generally 0.003 to 0.006), and

T = sample collection times (min).

9.2. Recount criteria.

It is very desirable for a counter to conduct a blind recount for about 1 in every 10 filter wedges (slides) counted. Alternatively, a second counter could perform the blind recount. In training sessions for novice counters, the trainee should conduct a blind recount for filter wedges counted by an experienced, proficient counter. In all cases, we will observe differences between the first and second counts of the same filter wedge. Most of these differences will be due to chance alone, that is, due to random variability (precision) of the count method. Statistical recount criteria enable us to decide whether observed differences can reasonably be explained as being due to chance alone or are probably due to systematic differences between counters or microscopes or due to some other biasing factor.

The following recount criterion is for a pair of counts that estimate some airborne fiber concentration (AC) in fibers/mL. The criterion is given at the type-I error level. That is, there is a 5% maximum risk that we will reject a pair of counts for the reason that one might be biased, when the large observed difference is really due to chance.

Reject a pair of counts because one might be biased if

$$(AC_2 - AC_1) \text{ exceeds } 2.77\,(\bar{AC})(CV_{FB}) \quad ,$$

where AC_1 = lower estimated airborne fiber concentration,

AC_2 = higher estimated airborne fiber concentration,

$\bar{AC}$ = average of the two airborne concentration estimates,

CV_{FB} = average CV for the two concentration estimates that are a function of the total fiber count (FB) in each case.

For a pair of counts on the same filter, reject the pair because one might be biased if

$$(FB_2 - FB_1) \text{ exceeds } 2.77(\bar{FB})(CV_{\bar{FB}}) \quad ,$$

where FB_1 = lower fiber count on the filter (total fibers),

FB_2 = higher fiber count on the filter (total fibers),

$\bar{FB}$ = average of the two total fiber counts, and

$CV_{\bar{FB}}$ = CV_T for the value FB.

10. Source Materials

10.1. R. B. Weidner and H. E. Ayer, "Dust Exposure in Asbestos Processing," in *Transactions of the Thirty-Fourth Annual Meeting of the American Conference of Governmental Industrial Hygienists* (San Francisco, California, May 1972), pp. 103-121.

10.2. R. E. Conway and W. D. Holland, "Statistical Evaluation of the Procedure for Counting Asbestos Fibers on Membrane Filters" (LFE Corporation, Richmond, California). Prepared for the Asbestos on Membrane Assoc. of North America, New York (1973).

10.3. N. A. Leidel and K. A. Busch, "An Evaluation of Phase Contrast Microscopes for Asbestos Counting," presented at the 1974 American Industrial Hygiene Association Conference, Miami Beach, Florida, May 18, 1974.

10.4. S. T. Beckett and M. D. Attfield, "Inter-Laboratory Comparison of the Counting of Asbestos Fibers Sampled on Membrane Filters," *Ann. Occup. Hyg.* **17**, 85-96 (1974).

10.5. G. S. Rajhans and G. M. Bragg, "A Statistical Analysis of Asbestos Fiber Counting in the Laboratory and Industrial Environment," *Am. Ind. Hyg. Assoc. J.* **36**, 909-915 (1975).

10.6. N. A. Leidel and K. A. Busch, "Statistical Methods for the Determination of Noncompliance with Occupational Health Standards," NIOSH Technical Publication 75-159 (1975).

10.7. N. A. Leidel, K. A. Busch, and J. R. Lynch, "Occupational Exposure Sampling Strategy Manual," NIOSH Technical Publication 77-173 (1977).

10.8. N. A. Leidel, K. A. Busch, and W. E. Crouse, "Exposure Measurement Action Level and Occupational Environmental Variability," NIOSH Technical Publication 76-131 (1975).

10.9. "Comments of the Johns-Manville Corporation with Respect to the Notice of Proposed Rulemaking: Occupational Exposure to Asbestos," *Federal Register*, October 9, 1975. Submitted to the public record at the U.S. Department of Labor, Occupational Safety and Health Administration (April 1976).

10.10. K. A. Busch, N. A. Leidel, R. W. Hornung, R. J. Smith, "Unbiased Estimates of Coefficients of Variation for Asbestos Counting Determined from Johns-Manville Data," in *Proceedings of the Society for Occupational and Environmental Health Conference on Occupational Exposures to Fibrous and Particulate Dust and Their Extension to the Environment*, August 1978.

10.11. G. H. Needham, *The Practical Use of the Microscope* (Charles C. Thomas Publishing Corporation, Springfield, Illinois, 1958).

10.12. G. L. Clark, *The Encyclopedia of Microscopy* (Rheinhold Publishing Corporation, New York, 1961).

10.13. W. C. McCrone and J. G. Delly, *The Particle Atlas, Edition Two* (Ann Arbor Science Publishers, Inc., Ann Arbor, Michigan, 1973).

10.14. W. B. Hook, C. E. Feigley, and D. A. Ludwig, "Interwedge Variation in the Membrane Filter Method for Airborne Asbestos Fibers," *Am. Ind. Hyg. Assoc. J.* **44**, 542-6 (1983).

BERYLLIUM ON AIR FILTERS

Analyte: Beryllium	**Method No:** IH150
Matrix: Filter	**Sensitivity:** 0.1 μg/filter
Procedure: Acid digestion and atomic absorption spectrophotometry	**Precision:** 4-5% RSD
Effective Date: 07/22/86	**Authors:** Ava M. Salman Michael G. Bell

1. Principle of Method

1.1. Filters are wet-ashed using nitric acid and perchloric acid to destroy the organic matrix.

1.2. The resulting solutions are aspirated into the nitrous oxide-acetylene flame of an atomic absorption spectrophotometer and the absorbance measured at 234.9 nm.

2. Sensitivity

2.1. Detection limits of 0.1 μg/filter can be achieved, based upon the minimum readable signal from the atomic absorption spectrophotometer.

3. Accuracy and Precision

3.1. Analyses of in-house spiked quality control filter samples gave a mean recovery of 106% ± 4.3%. The data are listed in Table I.

3.2. Analyses of twenty externally spiked quality control filter samples gave a mean recovery of 106% ± 2.8%. The data are listed in Table II.

4. Interferences

4.1. Sodium, magnesium, aluminum, and silicon depress beryllium sensitivity.

5. Collection and Storage of Samples

5.1. Millipore or Whatman filters are the preferred collection media. There are no special storage requirements.

6. Apparatus

6.1. Aluminum block: 23.5- by 10-cm with 3.4-cm-diam holes 8.5-cm deep, to receive 100-mL centrifuge tubes.

TABLE I. BERYLLIUM RECOVERY ON INTERNAL QUALITY ASSURANCE SAMPLES

Beryllium (μg/filter)		Recovery
Measured conc.	Spiked conc.	%
4.2	4.0	105
9.2	9.0	102
9.5	9.0	106
5.1	5.0	102
5.0	5.0	100
7.4	7.0	106
9.6	9.0	107
2.2	2.0	110
9.3	9.0	103
9.3	9.0	103
9.3	9.0	103
2.1	2.0	105
4.5	4.0	112
7.9	7.0	113
8.1	7.0	116
4.5	4.0	112
10.6	10.0	106
4.4	4.0	110
10.2	10.0	102
11.0	10.0	110
10.8	10.0	108
4.4	4.0	110
2.1	2.0	105
4.3	4.0	108
2.0	2.0	100
4.1	4.0	102
	Mean ± Std Dev	106.4 ± 4.3

TABLE II. BERYLLIUM RECOVERY ON OAK RIDGE QUALITY ASSURANCE SAMPLES

Beryllium (μg/filter)		Recovery
Measured conc.	Spiked conc.	%
10.8	10.0	108
23.9	25.0	96
53.5	50.0	107
106.0	100.0	106
10.9	10.0	109
10.7	10.0	107
26.8	25.0	107
26.8	25.0	107
53.9	50.0	108
53.9	50.0	108
106.0	100.0	106
104.0	100.0	104
105.0	100.0	105
52.4	50.0	105
26.8	25.0	107
10.5	10.0	105
10.7	10.0	107
26.0	25.0	104
53.2	50.0	106
102.7	100.0	103
	Mean ± Std Dev	105.8 ± 2.8

6.2. Sea sand: 1-2 cm placed in the bottom of the block holes.

6.3. Hot plate: Thermolyne Type 2600, to hold aluminum block.

6.4. Atomic absorption spectrophotometer: Model 551, Instrumentation Laboratoı Wilmington, Massachusetts.

6.5. Nitrous oxide-acetylene burner head.

6.6. Beryllium hollow cathode lamp.

6.7. Centrifuge tubes: Pyrex, 100-mL.

6.8. Pipettes: Eppendorf or equivalent, various sizes.

6.9. Repipettor: 1-10 mL variable dispenser, safe for acids.

6.10. Flasks: 10-mL, volumetric.

7. Reagents

7.1. Nitrous oxide.

7.2. Acetylene.

7.3. Nitric acid (concentrated, reagent-grade).

7.4. Perchloric acid (concentrated, reagent-grade).

7.5. Beryllium stock standard (1000 ppm). Spex Industries, Inc., Metuchen, New Jersey.

8. Calibration and Standards

8.1. Prepare two working standards by diluting 0.100 mL and 1.00 mL of stock beryllium standard into two 10-mL volumetric flasks. Bring to volume with 3% HNO_3. These solutions are 10 and 100 ppm beryllium respectively.

8.2. Prepare the standard curve by spiking filters with working standard and proceed with Steps 8.2.1. through 8.2.3. The standard curve may be prepared in a 3% HNO_3 solution and used directly.

8.2.1. Spike the first two filters with 10 and 100 µL of the 10 ppm working standard. This gives concentrations of 0.1 and 1.0 µg beryllium per filter.

8.2.2. Spike three more filters with 50, 100, and 200 µL of the 100 ppm working standard. This gives concentrations of 5.0, 10.0, and 20.0 µg beryllium per filter.

8.2.3. Ash the standard filters in the same manner as the sample filters.

8.3. Prepare the standard curve by aspirating each prepared standard, recording absorbances, and calculating concentration using a data regression program (e.g., Lotus 1-2-3, Version 2A).

9. Procedure

9.1. Place sample filters into 100-mL centrifuge tubes.

9.2. Place blank filters into 100-mL centrifuge tubes and spike with appropriate amounts of standard solution.

9.3. Add 200 µL of perchloric acid to each tube.

9.4. Add 8 mL of concentrated nitric acid to each tube.

9.5. Place all tubes in the aluminum block and heat on high heat, about 200°C, until all nitric acid has evaporated and perchloric acid fumes are observed.

9.6. If filters are completely dissolved, the liquid in the tubes should be clear or a very pale yellow. Continue heating to dryness. If residue is observed, add 5 mL of concentrated nitric acid to these tubes and continue heating. Continue adding 5 mL aliquots of nitric acid until little or no residue remains.

9.7. Cool all tubes and add 10 mL of 3% nitric acid to each tube.

9.8. Analyze each sample by atomic absorption spectrophotometry.

10. Operation of the Instrument

10.1. Procedures for operation of the Instrumentation Laboratory Model 551 atomic absorption spectrophotometer can be found in the *Atomic Absorption Methods Manual,* Vol. 1, *Standard Conditions for Flame Operation,* published by the Instrumentation Laboratory. Operating parameters and conditions are listed for each element.

11. Calculations

11.1. The Instrumentation Laboratory Model 551 atomic absorption spectrophotometer gives readings in absorbance.

11.2. Plot the standard curve using linear graph paper with concentration on the x-axis and the absorbance on the y-axis. Determine the concentration of the samples from the standard curve.

11.3. Linear regression may be used to calculate the standard curve and determine the concentration.

12. Source Materials

12.1. R. J. Sherman, "Stability of Beryllium on Filters When Analyzed by Atomic Absorption Spectroscopy," presented at the Rio Grande Section, AIHA, Annual Meeting, Albuquerque, New Mexico, October 29, 1982.

12.2. D. T. Coker and J. M. Ottaway, "Formation of Free Atoms in Air-Acetylene Flames Used in Atomic Absorption Spectrometry," *Nature Physical Science* **20**, 156-157 (1971).

12.3. B. Fleet, K. V. Liberty, and T. S. West, "A Study of Some Matrix Effects in the Determination of Beryllium by Atomic Absorption Spectroscopy in the Nitrous Oxide-Acetylene Flame," *Talanta* **17**, 203-210 (1970).

12.4. *Atomic Absorption Methods Manual,* Vol. 1, *Standard Conditions for Flame Operation* (Instrumentation Laboratory, Analytical Instrument Division, Wilmington, Massachusetts, 1975).

BREATHING AIR

Analyte: Oxygen, carbon dioxide, methane, nitrous oxide, nitrogen dioxide, sulfur dioxide, carbon monoxide, acetylene, condensable hydrocarbons, halogenated hydrocarbons	**Method No.:** IH155
Matrix: Air	**Range:** Unknown
Procedure: Infrared spectrophotometry, Beckman oxygen analyzer	**Precision:** Unknown
Effective Date: 08-01-78	**Author:** Stuart D. Nielsen

SAFETY NOTE: Before beginning this procedure, read all of the Material Safety Data Sheets for the chemicals listed in Sec. 7. Read Sec. 4.3 of the EM-9 Safety Manual for information on personal protective clothing and equipment and Sec. 5.13 for information on the handling of compressed gases. Read Sec. 11 of this procedure for proper waste disposal practices.

1. Principle of Method

1.1. The oxygen content of the air is determined using the Beckman OM-14 oxygen analyzer. The other analytes are determined by infrared spectrophotometry using long-path-length cells.

2. Range, Sensitivity, and Detection Limit

2.1. The range and sensitivity vary significantly with each analyte. By varying the path length of the cells, the range extends from the detection limit to the pure analyte.

2.2. The detection limits of the analytes, defined as sufficient material to give an absorbance peak of at least three times the noise level at the longest path length of the cells, are given in Table I.

TABLE I. DETECTION LIMITS	
Analyte	Limit
Oxygen	0.05 %
Carbon dioxide	1.0 ppm
Methane	0.5 ppm
Nitrous oxide	0.2 ppm
Nitrogen dioxide	0.5 ppm
Sulfur dioxide	1.0 ppm
Carbon monoxide	2.0 ppm
Acetylene	0.5 ppm
Condensable hydrocarbons	1.0 ppm
Halogenated hydrocarbons	2.0 ppm

3. Accuracy and Precision

3.1. Precision and accuracy data are not currently available.

4. Interferences

4.1. Any gaseous material present in the sample which has an absorption band at the analytical wavelength of one of the analytes would interfere.

5. Advantages and Disadvantages

5.1. The advantage of this procedure is that all of the desired analytes can be determined using only two instruments.

6. Apparatus

6.1. Beckman OM-14 oxygen analyzer.

6.2. Gas flow meter capable of measuring gas flows between 0 and 500 mL/min.

6.3. Infrared spectrophotometer.

6.4. Long-path-length gas cells to fit the infrared spectrophotometer. At least a 10-m path length is required to achieve the required detection limits.

6.5. Vacuum system to pump down the long-path-length gas cells, protected with a molecular sieve trap between the cells and the pump and a carbon filter and/or oil mist eliminator on the exhaust of the pump.

7. Reagents

7.1. Compressed room air.

7.2. Standard gas mixtures containing the analytes at concentrations around the maximum allowable concentration in the sample, with nitrogen making up the balance.

8. Calibration and Standards

8.1. Although the standard curve is theoretically linear from zero absorbance to infinite absorbance, precision and accuracy for any infrared determination are highest when the absorbances are kept between 0.1 and 1.0 absorbance units (10% to 80% transmittance).

8.2. Compressed room air, defined to contain 20.94 percent oxygen, is used to calibrate the Beckman oxygen analyzer.

8.3. Commercially prepared cylinders of nitrogen gas containing known quantities of the analytes are used to calibrate the infrared spectrophotometer.

9. Procedure

9.1. Turn on the compressed room air and adjust the flow rate to 250 ± 50 mL/min.

9.2. Attach the air line to the Beckman oxygen analyzer and adjust the reading on the display to read 20.94 ± 0.01.

9.3. Open the valve on the sample cylinder and adjust the flow rate to 250 ± 50 mL/min.

9.4. Attach the line from the sample cylinder to the Beckman oxygen analyzer. Allow the reading to settle down and record the reading.

9.5. Repeat Steps 9.2 and 9.4 at least four times.

9.6. Evacuate the long-path-length cells, both the sample cell and the reference cell, to less than 5 mm pressure.

9.7. Run an infrared scan of the empty cell from 4000 cm^{-1} to below 625 cm^{-1}.

9.8. Isolate the reference cell and the vacuum pump from the sample cell. Attach the sample cylinder to the inlet of the sample cell and fill the cell to atmospheric pressure with the sample.

9.9. Run an infrared scan of the sample from 4000 cm^{-1} to below 625 cm^{-1}.

9.10. Examine the spectrum obtained for absorbances at the various analytical wavelengths (see Table II). If any absorbances are detected, run additional shorter scans around the detected absorbances. Run three to nine scans around each detected absorbance.

TABLE II. ANALYTICAL WAVELENGTHS

Analyte	Wavelengths[a]
Carbon dioxide	2350 cm^{-1}
Methane	3020 (1300) cm^{-1}
Nitrous oxide	2230 (1300) cm^{-1}
Nitrogen dioxide	1620 (1750, 1270) cm^{-1}
Sulfur dioxide	1360 cm^{-1}
Carbon monoxide	2150 cm^{-1}
Acetylene	730 (3300) cm^{-1}
Condensable hydrocarbons	2930 (1470) cm^{-1}
Halogenated hydrocarbons	650-850 cm^{-1}

[a]Numbers in parentheses are confirmation wavelengths or alternate analytical wavelengths.

9.11. If any absorbances were detected for the different analytes, evacuate the sample cell to less than 5 mm pressure and fill it using the appropriate commercial gas standard(s). Run short scans around the analytical wavelength(s) for the analyte(s) in the standard(s).

10. Calculations

10.1 Average the readings from the Beckman oxygen analyzer to calculate the oxygen content of the gas. Calculate the standard deviation for the readings. The uncertainty is considered to be three standard deviations.

10.2. Draw a baseline for each absorbance detected. Measure the maximum absorbance and the baseline absorbance. Calculate the absorbance due to the

sample by subtracting the baseline absorbance from the maximum absorbance. (If the scans were run in transmission mode, convert the data first to absorbance mode and then subtract.)

10.3. Average the absorbances for each analyte.

10.4. Determine the concentrations of each analyte by comparing the resulting absorbances with the absorbances obtained for the corresponding standard.

11. Proper Waste Disposal Practices

11.1. No wastes are generated directly by this procedure.

12. Source Materials

12.1. None.

Revisions or additions to the procedure are marked (▒▒▒). Where a section heading is marked, the entire section has been revised.

CADMIUM IN URINE - FLAME AA

Analyte: Cadmium	**Method No.:** IH160
Matrix: Urine	**Sensitivity and Precision:** 0.022 μg/mL ±3%
Procedure: Chelate cadmium with sodium diethyldithiocarbamate; extract chelate into an organic solvent; analyze by flame atomic absorption spectrophotometry.	**Detection Limit:** <0.002 μg/mL
Effective Date: 02/11/84 to 01/02/92	**Author:** Ruth Sherman

1. Principle of Method

1.1. A known volume of urine is chelated with sodium diethyldithiocarbamate (DDC).

1.2. The chelate is extracted into methyl isobutyl ketone (MIBK).

1.3. The organic layer is aspirated into a flame atomic absorption spectrophotometer (AAS).

1.4. A hollow cathode lamp for cadmium is used to provide a characteristic cadmium line at 228.3 nm. The absorbance is proportional to the cadmium concentration.

2. Sensitivity, Precision, and Detection Limit

2.1. A sensitivity of 0.022 μg/mL is the calculated value of a concentration that will give an absorbance value of 0.004. This is calculated from the absorbance value of one standard.

2.2. A precision of 3% relative standard deviation is determined by averaging the relative standard deviation of all standards.

2.3. Detection limit is twice the average standard deviation of the blank.

3. Advantages and Disadvantages of Method

3.1. The probability that cadmium has been separated from urine into a detectable compound is greater than if the samples are run without separation.

3.2. Sample separation is time consuming, and some sample may be lost.

4. Collection and Storage of Samples

4.1. The urine samples are collected in clean, disposable plastic containers and refrigerated upon receipt.

4.2. Add concentrated hydrochloric acid to the urine samples to attain an acidity of 1% if samples must be stored longer than 2-3 days.

5. Apparatus

5.1. Pipettes: Eppendorf or equivalent, various sizes.

5.2. Centrifuge tubes: 10-mL, graduated, with screw tops.

5.3. pH meter: Orion Research, Cambridge, Massachusetts.

5.4. Wrist action shaker: Burrell Corp., Pittsburgh, Pennsylvania.

5.5. Atomic absorption spectrophotometer: Model 551, Instrumentation Laboratory, Wilmington, Massachusetts.

5.6. Centrifuge: IEC Clinical, Needham Heights, Massachusetts.

5.7. Air-acetylene burner head: Instrumentation Laboratory, Wilmington, Massachusetts.

5.8. Cadmium hollow cathode lamp: Instrumentation Laboratory, Wilmington, Massachusetts.

6. Reagents

6.1. Hydrochloric acid. Concentrated reagent-grade, J. T. Baker Chemical Company, Phillipsburg, New Jersey.

6.2. Sodium hydroxide. Mallinckrodt, Inc., St. Louis, Missouri.

6.3. Sodium diethyldithiocarbamate. Eastman Kodak Company, Rochester, New York.

6.4. Methyl isobutyl ketone. Burdick-Jackson, Muskegon, Michigan.

6.5. pH standard 7. VWR Scientific, San Francisco, California.

6.6. Cadmium stock standard (1000 μg/mL). Fisher Scientific Company, Fair Lawn, New Jersey.

6.7. Nitric acid. Concentrated reagent-grade, J. T. Baker Chemical Company, Phillipsburg, New Jersey.

7. Calibration and Standards

7.1. Prepare a working standard of 100 µg/mL by diluting 1 mL of stock cadmium standard in 10 mL of 2% HNO_3.

7.2. Place 3 mL aliquots of urine into 10-mL centrifuge tubes and spike with the 100-µg/mL working standard as follows:

Tube No.	Amount (µL)	Concentration (µg/mL)
1	0	0.000
2	5	0.167
3	10	0.333
4	20	0.667
5	40	1.333
6	50	1.667

7.3. Prepare the standard curve by aspirating each standard into the instrument.

7.4. Absorbance is proportional to sample concentration.

8. Procedure

8.1. Adjust pH between 6.0 and 7.5 with 2.5 N NaOH.

8.2. Measure 3 mL of each urine sample into centrifuge tubes as described in Step 7.2. There is a separate series of tubes for each sample.

8.3. Add 1 mL of 1% DDC solution in water to each tube and vortex.

8.4. Add 5 mL of MIBK, cap securely, and place in the shaker for 10 min.

8.5. Centrifuge the tubes for 5 min.

8.6. Aspirate the organic layer into the AAS for analysis.

9. Operation of Equipment

9.1. Procedures for operation of the Instrumentation Laboratory Model 551 atomic absorption spectrophotometer can be found in the operator's manual.

10. Calculations

10.1. Average the absorbance values of samples and of samples with standard additions.

10.2. Plot a calibration curve with concentration on the x-axis and absorbance on the y-axis.

10.3. Determine the concentration of the samples from the standard curve.

11. Source Materials

11.1. R. C. Baselt, *Biological Monitoring Methods for Industrial Chemicals* (Biomedical Publications, Davis, California, 1980), pp. 55-56.

11.2. *Operator's Manual Model IL551 AA/AE Spectrophotometer* (Instrumentation Laboratory, Analytical Instrument Division, Wilmington, Massachusetts, 1978).

11.3. *Atomic Absorption Methods Manual*, Vol. 1, *Standard Conditions for Flame Operation* (Instrumentation Laboratory, Analytical Instrument Division, Wilmington, Massachusetts, 1975).

CADMIUM IN URINE - FLAMELESS AA

Analyte: Cadmium	**Method No.:** IH161
Matrix: Urine	**Detection Limit:** 0.005 mg/L
Procedure: Urine is diluted in a matrix solution of NH_4F, followed by flameless atomic absorption spectrophotometry	**Precision:** 25% RSD
Effective Date: 05/01/85 to 01/02/92	**Author:** Ruth Sherman

1. **Principle of Method**

   1.1. Urine is diluted with 0.25 M NH_4F.

   1.2. The solution is aspirated into a flameless atomic absorption spectrophotometer (AAS).

   1.3. A hollow cathode lamp for cadmium is used to provide a characteristic cadmium line at 228.3 nm. The absorbance is proportional to the cadmium concentration.

2. **Precision and Detection Limit**

   2.1. A precision of 25% relative standard deviation (RSD) was determined by averaging the RSD of 10 quality control samples.

   2.2. A minimum detection limit of 0.005 mg/L was the lowest concentration of cadmium found in 30 normal samples.

3. **Advantages and Disadvantages**

   3.1. Because there is no acid or peroxide digestion or other extensive chemistry involved in preparation of the sample, there is virtually 100% recovery of the sample.

   3.2. Preparation time is minimal and contamination problems are minimized.

   3.3. Detectability is improved one order of magnitude over other methods.

   3.4. Analysis by flameless AAS, as opposed to flame, is slow.

4. **Apparatus**

   4.1. Pipettes: Eppendorf, various sizes.

   4.2. Test tubes: polypropylene.

4.3. Separatory funnel.

4.4. Graduated cylinder: Teflon.

4.5. Funnel: Teflon.

4.6. Filter paper: Whatman No. 42.

4.7. Sample bottle: 100-mL, Teflon.

4.8. Atomic absorption spectrophotometer: Model 551, Instrumentation Laboratory, Wilmington, Massachusetts.

4.9. Graphite furnace: Model 555, Instrumentation Laboratory, Wilmington, Massachusetts.

4.10. Autosampler: Model 254, Instrumentation Laboratory, Wilmington, Massachusetts.

4.11. Cadmium hollow cathode lamp: Instrumentation Laboratory, Wilmington, Massachusetts.

5. **Reagents**

5.1. Water (distilled in glass).

5.2. Ammonium fluoride. Mallinckrodt, Inc., St. Louis, Missouri.

5.3. Ammonium pyrrolidine dithiocarbamate. Fisher Scientific Company, Fair Lawn, New Jersey.

5.4. Methyl isobutyl ketone. Burdick-Jackson, Muskegon, Michigan.

5.5. Cadmium stock standard. Fisher Scientific Company, Fair Lawn, New Jersey.

6. **Preparation of Standards and Matrix Solution**

6.1. Prepare a working standard of 100 μg/L by diluting 0.1 mL of 1000 ppm standard cadmium in 10 mL of 2% HNO_3. Further dilute 0.1 mL of this solution in 10 mL of 2% HNO_3.

6.2. Prepare the matrix solution.

6.2.1. Dissolve 1.0 g of ammonium fluoride (NH_4F) in 100 mL of distilled water.

6.2.2. Dissolve 1.0 g of ammonium pyrrolidine dithiocarbamate (APDC) in 100 mL of distilled water.

6.2.3. Add 10 mL APDC solution to 50 mL of NH_4F solution, pour into a separatory funnel, and shake.

6.2.4. To the solution in the separatory funnel, add 10 mL of methyl isobutyl ketone, and shake well.

6.2.5. After the layers separate, filter the water layer. This is the cadmium-free matrix solution.

7. Procedure

7.1. If samples must be stored longer than 2-3 days, acidify the samples to 1% with concentrated hydrochloric acid.

7.2. Aliquot 1.0 mL of urine into each of four tubes.

7.3. Add 1.0 mL of matrix solution to each tube.

7.4. Prepare standards from 100 µg/L stock solution (Step 6.1.) as follows:

Tube No.	Amount (µL)	Concentration (µg/mL)
1	0	0.0
2	20	2.0
3	50	5.0
4	100	10.0

7.5. Vortex the solutions.

7.6. Aspirate sample and standard additions into the AAS. Repeat Steps 7.2. through 7.6. for each sample.

8. Operation of the Instrument

8.1. Procedures for operation of the Instrumentation Laboratory Model 551 atomic absorption spectrophotometer and Instrumentation Laboratory Model 555 graphite furnace can be found in the operator's manuals for these instruments.

9. Calculations

9.1. Plot the average absorbance value for each sample and standard addition with concentration on the x-axis and absorbance on the y-axis.

9.2. Determine the concentration of cadmium in the original sample by linear regression.

10. Source Materials

10.1. V. Lagesson and L. Andrasko, "Direct Determination of Lead and Cadmium in Blood and Urine by Flameless Atomic Absorption Spectrophotometry," *Clin. Chem.* **25**, 11, 1948-1953 (1979).

10.2. *Operator's Manual Model IL551 AA/AE Spectrophotometer* (Instrumentation Laboratory, Analytical Instrument Division, Wilmington, Massachusetts, 1978).

10.3. *Atomic Absorption Methods Manual,* Vol. 2, *Flameless Operations* (Instrumentation Laboratory, Analytical Instrument Division, Wilmington, Massachusetts, 1978).

10.4. E. F. Perry, S. R. Koirtyohann, and H. M. Perry, Jr., "Determination of Cadmium in Blood and Urine by Graphite Furnace Atomic Absorption Spectrophotometry," *Clin. Chem.* **21**, 626-629 (1975).

10.5. D. H. K. Lee, *Metallic Contaminants and Human Health* (Academic Press, New York, New York, 1972), p. 236.

10.6. P. A. Ullucci and J. Y. Hwang, "Determination of Cadmium in Biological Materials by Atomic Absorption," *Talanta* **21**, 745-750 (1974).

CHOLINESTERASE IN SERUM

Analyte: Cholinesterase Activity	**Method No.:** IH170
Matrix: Blood Serum	**Detection Limit:** 50 μmol/min/L
Procedure: Rate of acetylthiocholine hydrolysis as observed by visible light absorption	**Precision:** 7% RSD
Effective Date: 10/01/82 to 09/10/92	**Author:** Stuart D. Nielsen

1. **Principle of Method**

   1.1. An aliquot of blood serum is diluted with a buffer solution and is mixed with solutions of acetylthiocholine and 5,5'-dithiobis(2-nitrobenzoic acid), and the rate of yellow color formation is measured at 410 nm.

   1.2. The rate of formation of color is proportional to the activity of the serum cholinesterase.

2. **Sensitivity**

   2.1. A detection limit in a determination of this type is meaningless as high results are good and low results indicate exposure to enzyme inhibiting materials.

   2.2. The detection limit is 50 micromoles per minute per liter of serum (μmol/min/L) and the range is from 50 to greater than 12,000 μmol/min/L.

   2.3. The normal activity range observed in unexposed, healthy adults is 1000-3500 μmol/min/L.

3. **Accuracy and Precision**

   3.1. The pooled relative standard deviation for the method was 7% for 30 samples ranging in activity from 900 to 4000 μmol/min/L.

4. **Interferences**

   4.1. Cholinesterase is inhibited by a large number of compounds, particularly organophosphorus compounds. It is important that all glassware be clean and that only distilled water be used in preparing solutions.

5. **Collection and Storage of Samples**

   5.1. Because of the wide variation in the levels observed among healthy individuals, a base line should be obtained before any potential exposure. This should consist of three samples taken a minimum of 4 days apart.

5.2. The blood samples are drawn by the Occupational Medicine group (HSE-2), who also separates the serum.

5.3. The serum samples should be stored in a refrigerator before analysis.

5.4. Serum samples have been stored for up to 2 weeks without measurable change in cholinesterase activity.

6. Apparatus

6.1. Pipettes: Eppendorf or equivalent, 10-, 20-, 100-, 1000-μL.

6.2. Volumetric flasks: 1-, 10-, 50-, 100-, 1000-mL.

6.3. Ultraviolet-visible spectrophotometer: capable of time drive of the chart and pen at constant wavelength.

6.4. Cuvettes: to fit above spectrophotometer, preferably 1-cm square. Disposable plastic cuvettes are acceptable.

6.5. Analytical balance: capable of weighing to 0.1 mg.

6.6. Stopwatch.

7. Reagents

7.1. Hydrochloric acid (concentrated, density 1.18 g/mL).

7.2. tris(Hydroxymethyl)aminomethane (THAM) buffer solution. Dissolve 9.68 g of THAM per liter of final solution and adjust the pH of the solution to 7.4 with concentrated hydrochloric acid.

7.3. 5,5'-Dithiobis(2-nitrobenzoic acid) (DTNB) solution. Dissolve 396.5 mg of DTNB in 100 cm^3 of THAM buffer. This solution is stable for weeks when stored in a refrigerator at 5°C. This is a saturated solution of DTNB.

7.4. Acetylthiocholine iodide (ASChI) solution. Dissolve 21.6 mg of ASChI in 1 mL of distilled water. This solution is unstable and should be made fresh at least daily.

8. Procedure

8.1. Turn on the spectrophotometer, set the wavelength to 410 nm, and allow it to warm up for at least 15 min.

8.2. Set the instrument to operate in the absorbance mode.

8.3. Set the zero absorbance using reagent blanks in both the reference and sample positions.

8.3.1. The reagent blank consists of 3.0 mL of buffer solution and 100 μL of DTNB solution.

8.3.2. If ASChI solution is added to the reference mixture, it will slowly hydrolyze and increase the absorbance of the reference causing negative absorbance values for the sample solutions.

8.4. Dilute 100 μL of blood serum to 1 mL with buffer solution in a volumetric flask. Shake to mix the solution.

8.5. Add 3.0 mL buffer solution, 100 μL of DTNB solution, and 20 μL of ASChI solution to the sample cuvette.

8.6. Add 100 μL of the blood serum solution to the solution in the cuvette, start the stopwatch, stir the contents, and place the cuvette into the sample compartment.

8.7. After 15 s, start the spectrophotometer and record the absorbance of the sample solution for 15 to 75 s.

8.8. Run each serum solution in triplicate.

9. Calculations

9.1. The activity of the cholinesterase is calculated from the equation

$$Ac = \frac{(A_{15} - A_{75}) \times V \times 1000}{13.6 \times S} ,$$

where Ac = activity of cholinesterase,

A_{15} = absorbance at 15 s,

A_{75} = absorbance at 75 s,

V = total volume in cuvette (3.22 mL),

1000 = factor to convert mL to L,

13.6 = molar absorptivity,

S = volume of serum used in mL (0.010).

9.2. Express activity as micromoles of acetylthiocholine iodide hydrolyzed per minute per liter of serum (μmol/min/L).

9.3. The normal range of activity for healthy adults is 1000-3500 μmol/min/L.

10. Source Material

10.1. This information was provided by D. Stitcher, U.S. Army Medical Research and Development Center, Aberdeen Proving Grounds, Aberdeen, Maryland, 1982.

N,N-DIMETHYLAMINOAZOBENZENE - A CHEMICAL SPOT TEST

Analyte: N,N-Dimethylaminoazobenzene	**Method No.:** IH180
Matrix: Metal, painted, or concrete surfaces	**Detection Limit:** 30 mg/cm^2 on metal or painted surfaces; 5 μg/cm^2 on concrete surfaces
Procedure: On metal or painted surfaces, the surface is swiped with filter paper and a chemical spot test performed. On concrete, the chemical spot test is performed directly on the surface.	
Effective Date: 01/12/76 to 09/10/92	**Author:** Robert W. Weeks, Jr.

1. Principle of Method

1.1. N,N-Dimethylaminoazobenzene will react with dilute hydrochloric acid to form a highly colored red/magenta complex.

2. Accuracy and Precision

2.1. As this procedure is designed to be qualitative, the terms precision and accuracy are not applicable.

3. Interferences

3.1. Other species, such as N,N-dimethyl-p-(m-tolylazo)aniline, a colorimetric indicator that reacts with acid to form magenta-colored derivatives, will interfere.

3.2. Other brightly colored red or blue chemical entities may obscure the magenta of this test if their concentration is sufficiently great relative to that of the present test compound (N,N-dimethylaminoazobenzene).

4. Advantages and Disadvantages

4.1. The method is sensitive, rapid, selective, and simple to use.

4.2. The method will allow rapid on-site detection of N,N-dimethylaminoazobenzene, a compound thought to be carcinogenic in man.

4.3. The principal disadvantage of the method is that it is not specific, and the existence of a positive spot test will require sampling and subsequent confirmation by laboratory analysis.

5. Apparatus

5.1. Bag: polyethylene, 5- by 7-in. or equivalent, with ties.

5.2. Filter paper: 7-cm-diam (Whatman 42, Whatman, Inc., Clifton, New Jersey, or S & S 559 Blue Ribbon, Schleicher & Schuell, Keene, New Hampshire, or equivalent).

5.3. Reagent bottle: 4-oz polyethylene with screw-on dropper nozzle.

5.4. Safety goggles.

5.5. Spatula: metal, 15-20 cm in length.

5.6. Safety gloves: polyethylene, disposable (Gauntlet cuff HANDGARDS, Handgards, Inc., Pittsburg, CA 94565) or equivalent.

6. Reagents

6.1. Methanol

6.2. Hydrochloric Acid (dilute). **SLOWLY AND WITH STIRRING**, add 7 mL of concentrated hydrochloric acid to 93 mL of distilled water.

7. Procedure

NOTE: Wear safety goggles and polyethylene gloves.

7.1. Metal or painted surfaces.

7.1.1. Place five drops of methanol on a 7-cm-diam filter paper.

7.1.2. Using pressure sufficient to ensure intimate contact, but being careful to not tear the paper, rub the filter paper over approximately 500 cm^2 of the area being monitored.

7.1.3. Place three drops of dilute hydrochloric acid solution upon that area of the filter paper that had swiped the monitored surface and also place a drop upon an area of the paper that has not touched the surface.

7.1.4. Allow the paper to dry for one minute and examine. The presence of a magenta color, whose intensity is greater than that of the corresponding blank, indicates the possible presence of the cancer-suspect agent N,N-dimethylaminoazobenzene.

7.1.5. If the test is positive, collect a sample in a polyethylene bag and submit it to an analytical laboratory for confirmation.

7.2. Concrete surfaces.

7.2.1. Place three drops of dilute hydrochloric acid directly upon the concrete surface being monitored.

7.2.2. Examine immediately after applying the acid to the surface. The presence of a magenta color, even though transient, indicates the possible presence of the cancer-suspect agent N,N-dimethylaminoazobenzene.

7.2.3. If the test is positive, collect a sample in a polyethylene bag and submit it to an analytical laboratory for confirmation.

8. Source Materials

8.1. *Handbook of Chemistry and Physics*, 55th ed., R. D. Weast, Ed., (CRC Press, Cleveland, 1974), p. D-115.

8.2. R. W. Weeks, Jr., B. J. Dean, and S. K. Yasuda, "Detection Limits of Chemical Spot Tests Toward Certain Carcinogens on Metal, Painted, and Concrete Surfaces," *Anal. Chem.* **48**, 2227-2233 (1976).

FLUORIDE IN URINE

Analyte: Fluoride	**Method No.:** IH190
Matrix: Urine	**Detection Limit:** 0.1 μg/mL
Procedure: Fluoride selective electrode	**Precision:** ±1% RSD
Effective Date: 02/02/81 to 01/02/92	**Contact Person:** Carol Sutcliffe

1. **Principle of Method**

   1.1. An aliquot of urine is diluted with distilled water and treated with a special buffer to control the pH and to complex interfering ions.

   1.2. The fluoride ion concentration in the buffered urine solution is determined potentiometrically using an ion-selective fluoride electrode in conjunction with a standard single-junction electrode.

2. **Lower Detection Limit and Precision**

   2.1. The lower detection limit (LDL) of the electrode for fluoride ion is about 0.05 μg/mL, which makes the LDL of the method equal to 0.1 μg/mL.

   2.2. The precision of the method is ±1% relative standard deviation.

3. **Interferences**

   3.1. Extremes in pH interfere, but the addition of a pH 5.0 buffer controls the pH.

   3.2. Levels of aluminum or iron higher than 5 ppm will complex fluoride. Consult the Instruction Manual (see Source Material 9.3.) for modification of the TISAB buffer solution to free fluoride from higher levels of these metal ions.

4. **Apparatus**

   4.1. Fluoride electrode: Orion Ionanalyzer Fluoride Electrode, Model 94-09A (Orion Research, Inc., Cambridge, Massachusetts).

   4.2. Reference electrode: Orion Single Junction Electrode, Model 90-01.

   4.3. Specific ion meter: Orion Model 701A.

   4.4. Graduated cylinders: polyethylene.

4.5. Magnetic stirrer with Teflon-coated stirring bar.

4.6. Beakers: polyethylene.

5. **Reagents**

5.1. TISAB. Total ionic strength activity buffer, Catalogue No. 94-09-09, Orion Research, Inc., Cambridge, Massachusetts.

5.2. Fluoride solution (0.10 M), Catalogue No. 94-09-06, Orion Research, Inc., Cambridge, Massachusetts.

6. **Calibration and Standards**

6.1. Prepare five fluoride standards.

6.1.1. Standard 1 (114 µg/mL). Dilute 3 mL of 0.1 M standard fluoride solution to 50 mL with H_2O.

6.1.2. Standard 2 (11.4 µg/mL). Dilute 5 mL of standard 1 to 50 mL with H_2O.

6.1.3. Standard 3 (1.14 µg/mL). Dilute 5 mL of standard 2 to 50 mL with H_2O.

6.1.4. Standard 4 (0.228 µg/mL). Dilute 10 mL of standard 3 to 50 mL with H_2O.

6.1.5. Standard 5 (0.114 µg/mL). Dilute 5 mL of standard 3 to 50 mL with H_2O.

6.2. Check the calibration of the Orion 701A specific ion meter.

6.2.1. Place 50 mL of H_2O and 50 mL of TISAB in a 150-mL beaker.

6.2.2. Turn the function switch to the mV position and place the electrodes in the solution to a depth of 3 cm.

6.2.3. Pipette 1 mL of 0.1 M fluoride standard solution into the beaker. Stir the solution and record the electrode potential in mV.

6.2.4. Add 10 mL of 0.1 M fluoride standard solution to the beaker. Stir the solution and record the potential in mV.

6.2.5. Determine the difference between the first and second potential readings.

6.2.6. Proper electrode operation is indicated by a difference in potential of 58 ±1 mV with a solution temperature between 20 and 25°C.

6.2.7. If the difference in potential is outside this range, consult the Instruction Manual for the Orion Model 94-09A Fluoride Electrode.

7. Procedure

7.1. Add 25 mL of each standard and sample to polyethylene beakers containing 25 mL of TISAB and a stirring bar.

7.2. Place the electrodes in the solution and set the meter to mV.

7.3. Stir the solution for 60 s and record the potential.

8. Calculations

8.1. Plot the standard curve using semilog graph paper with fluoride ion concentration in μg/mL on the x-axis and mV reading on the y-axis.

8.2. Determine the concentration of the samples from the standard curve.

9. Source Materials

9.1. *Annual Book of ASTM Standards*, Part 23, Designation: D 1179-72 (American Society for Testing and Materials, Philadelphia, Pennsylvania, 1973), pp. 315-317.

9.2. J. Tuvl, "Fluoride Ion Activity Electrode as a Suitable Means for Exact Direct Determination of Urinary Fluoride," *Anal. Chem.* **44**, 1693-1694 (1972).

9.3. *Instruction Manual for Orion Model 94-09A Fluoride Electrode* (Orion Research, Inc., Cambridge, Massachusetts, 1973) p. 9.

FORMALDEHYDE IN AIR - ALUMINA TUBE COLLECTION

Analyte: Formaldehyde	**Method No.:** IH200
Matrix: Air	**Range:** 0.4-52 mg/m^3 in a 6-L sample
Procedure: Alumina collection; methanol-water elution; spectrophotometric measurement	**Precision:** 6% RSD at 3.5 or 3.9 mg/m^3
Effective Date: 06/30/76 to 09/10/92	**Author:** Gerry Wood

1. Principle of Method

1.1. Formaldehyde is collected from air on alumina.

1.2. The sample is stabilized immediately after collection by desorption into a 1% solution of methanol in water.

1.3. The formaldehyde in the methanol solution is determined by the chromotropic acid-sulfuric acid spectrophotometric method.

2. Range and Detection Limits

2.1. The linear range of the spectrophotometric analysis extends from a detection limit of about 1 µg to an amount near 20 µg or about 0.1 to 2 µg/mL in the final solution. This corresponds to approximately 0.4 to 0.9 mg/m^3 (0.3 to 0.7 ppm) of formaldehyde in a 6-L sample of air.

2.2. The absorbance of the sample solution at the detection limit is about 0.05 units greater than that of the reagent blank.

2.3. The capacity of the sorbent tube at high humidity is at least 312 µg. This corresponds to a concentration of 52 mg/m^3 when 6 L of air are sampled. At lower humidities the capacity of the sorbent tube is higher.

3. Accuracy and Precision

3.1. The precision of the overall sampling and analytical procedure has been determined at 3.5 and 3.9 mg/m^3 of formaldehyde in air. The analysis of two sets of seven consecutive samples, one set exposed at each concentration, indicated a relative standard deviation for all results of 6%.

3.2. The accuracy of the sorbent tube sampling method relative to impinger sampling has been measured to be 101% at 2.7 mg/m^3 and 107% at 6.6 mg/m^3.

4. Interferences

4.1. The interferences discussed below have been evaluated for the chromotropic acid procedure described in Source Material 11.3., which involves the collection of formaldehyde in an impinger-bubbler containing 0.1% chromotropic acid in concentrated sulfuric acid. These interferences have not been evaluated for the overall sorbent collection and analysis procedure described here.

4.2. The chromotropic acid procedure for formaldehyde receives very little interference from other aldehydes. Saturated aldehydes give less than 0.01% positive interference. Ethanol and higher molecular weight alcohols and olefins in mixtures with formaldehyde are negative interferences. Concentrations of alcohols in air are usually much lower than formaldehyde concentrations; therefore, alcohols are not serious interferents.

4.3. Phenols cause 10 to 20% negative interference when present at an 8:1 excess over formaldehyde. They are ordinarily present at lower concentrations than formaldehyde and, therefore, are not serious interferents.

4.4. Ethylene and propylene in a 10:1 excess over formaldehyde in air cause a 5 to 10% negative interference and 2-methyl-1,3-butadiene in a 15:1 excess over formaldehyde in air causes a 15% negative interference. Aromatic hydrocarbons also constitute a negative interference. It has recently been found that cyclohexanone causes a bleaching of the final color.

5. Advantages and Disadvantages

5.1. Advantages.

5.1.1. The sampling device contains a solid sorbent rather than a liquid absorbing solution. This results in easier sample handling without danger of spillage. The sorbent tube is smaller and less subject to accidental breakage than impingers.

5.1.2. Eluted alumina sections are transported to the laboratory in small, easily packed containers.

5.1.3. Formaldehyde is stabilized in the 1% methanol eluent. Eluted samples can be shipped and stored at 20 ± 5°C for at least one month without loss.

5.2. Disadvantages.

5.2.1. A significant loss of formaldehyde absorbed on alumina occurs after one hour. Therefore, the sampling period is limited to 30 min and immediate elution is required.

5.2.2. The absorbance of the solution increases slowly on standing. An increase of 3% in absorbance was noted after the solution stood for one day, and an increase of 10% was noted after the solution stood for eight days.

6. Apparatus

6.1. Spectrophotometer or colorimeter: capable of measuring absorbance at 580 nm.

6.2. Centrifuge tubes: 2- and 10-mL, glass-stoppered.

6.3. Centrifuge: capable of handling tubes containing 10 mL of solution.

6.4. Pipettes: 10-mL.

6.5. Erlenmeyer flasks: assorted sizes.

6.6. Microburette.

6.7. Microliter syringe.

6.8. Volumetric flasks: assorted sizes.

7. Reagents

7.1. Chromotropic acid reagent. Dissolve in distilled water 0.10 g of 4,5-dihydroxy-2, 7-naphthalenedisulfonic acid, disodium salt (Eastman Kodak Company, Rochester, New York, Cat. No. P230, or equivalent). Dilute to 10 mL with water. Filter, if necessary, and store in a brown bottle. Prepare a fresh solution weekly. Discard the solution if it darkens.

7.2. Sulfuric acid (concentrated).

7.3. Formaldehyde standard solution A (1 mg/mL). Dilute about 3 mL of 37% formalin solution to 1 L with distilled water. This solution must be standardized as described in Section 8.1. The solution is stable for at least 3 months. Sodium formaldehyde bisulfite (Eastman Kodak Company, Cat. No. P6450, or equivalent) can also be used as a primary standard (Source Material 11.4.). Dissolve 4.190 g in distilled water and dilute to 1 L.

7.4. Formaldehyde standard solution B (10 μg/mL). Dilute 1 mL of standard solution A to 100 mL with distilled water. Make up fresh daily.

7.5. Iodine (approximately 0.1 N). Dissolve 25 g of potassium iodide in about 25 mL of water. Add 12.7 g of iodine and dilute to 1 L.

7.6. Iodine (0.01 N). Dilute 100 mL of the 0.1 N iodine solution to 1 L. Standardize against sodium thiosulfate.

7.7. Starch solution (1%). Make a paste of 1 g of soluble starch and 2 mL of water and slowly add the paste to 100 mL of boiling water. Cool. Add several mL of chloroform as a preservative and store in a stoppered bottle. Discard when a mold growth is noticeable.

7.8. Buffer solution. Dissolve 80 g of anhydrous sodium carbonate in about 500 mL of water. Slowly add 20 mL of glacial acetic acid and dilute to 1 L.

7.9. Sodium bisulfite (1%). Dissolve 1 g of sodium bisulfite in 100 mL of water. Prepare a fresh solution weekly.

7.10. Methanol (1%, v/v). Dilute 10 mL of reagent-grade methanol to 1 L with double-distilled water.

8. Calibration and Standards

8.1. Standardization of formaldehyde solution.

8.1.1. Pipette 1 mL formaldehyde standard solution A into an iodine flask. Pipette 1 mL of distilled water into another flask for a blank.

8.1.2. Add 10 mL of 1% sodium bisulfite and 1 mL of 1% starch solution to each flask.

8.1.3. Titrate with 0.1 N iodine to a dark blue color.

8.1.4. Destroy the excess iodine with 0.05 N sodium thiosulfate.

8.1.5. Add 0.01 N iodine until a faint blue end point is reached. The excess inorganic bisulfite is now completely oxidized to sulfate, and the solution is ready for the assay of the formaldehyde-bisulfite addition product.

8.1.6. Chill the flask in an ice bath and add 25 mL of chilled buffer solution. Using a microburette, titrate the liberated sulfite with 0.01 N iodine to a faint blue end point. The amount of iodine added in this step must be accurately measured and recorded.

8.1.7. Since 1 mL of 0.01 N I_2 solution is equivalent to 0.15 mg of formaldehyde, the concentration of the standard formaldehyde solution (in mg/mL) is given by

$$C_s = V_{I_2} \times N_{I_2} \times 15 \quad ,$$

where C_s = concentration of the standard formaldehyde solution,

V_{I_2} = volume (mL) of 0.01 N I_2 solution used to titrate the liberated sulfite, corrected for the blank, and

N_{I_2} = the exact normality of the 0.01 N I_2 solution.

8.2. Preparation of calibration curve.

8.2.1. Pipette 0, 0.1, 0.3, 0.5, 0.7, 1.0, and 2.0 mL of formaldehyde standard solution B into glass-stoppered test tubes.

8.2.2. Dilute each standard to 4 mL with distilled water.

8.2.3. Develop the color as described in the analysis procedure (Section 9.2.).

8.2.4. The amount of formaldehyde in each standard is based on the standardization value of solution A.

9. Procedure

9.1. Cleaning of equipment.

9.1.1. Care must be exercised to ensure the absence of contaminants such as organic materials that can be charred by concentrated sulfuric acid.

9.1.2. Soak glassware for 1 h in a 1:1 mixture of nitric and sulfuric acids and follow by thoroughly rinsing with distilled water to remove all possible organic contaminants.

9.2. Analysis of samples.

9.2.1. If the analysis is to be conducted soon after sampling, allow at least 1 h for desorption of formaldehyde from the alumina. Gently agitate the mixtures several times.

9.2.2. Pipette a 4 mL aliquot from each of the sample solutions into glass-stoppered test tubes. If the formaldehyde content of the aliquot is anticipated to exceed the limit of the method, dilute a smaller aliquot to 4 mL with the 1% methanol solution.

9.2.3. Pipette 4 mL of the 1% methanol solution for a reagent blank.

9.2.4. Add 0.1 mL of the 1% chromotropic acid reagent to the blank and samples and mix.

9.2.5. **SLOWLY AND CAUTIOUSLY** pipette 6 mL of concentrated sulfuric acid into the solution. The solution becomes extremely hot during the addition of the sulfuric acid. If the acid is not added slowly, some loss of sample could occur because of spattering.

9.2.6. Allow the sample solution to cool to room temperature.

9.2.7. Centrifuge to separate the alumina from the solution.

9.2.8. Determine the absorbance of the solution at 580 nm in a spectrophotometer with a 1-cm cell. No change in absorbance has been noted over a 3-h period after color development.

9.3. Determination of Desorption Efficiency

9.3.1. Add 1.65 g of alumina (from the same batch as that used in the sampling tubes) to a 2-mL glass-stoppered tube.

9.3.1.1. With a microliter syringe, evenly distribute 18 μL of standard solution A (1 μg/μL) in the alumina in the tube. Note the exact time.

9.3.1.2. Seal the tube and gently shake the alumina. This amount of formaldehyde (18 μg) corresponds to a 6-L air sample collection at a concentration of 3 mg/m^3 (2 ppm), the Occupational Safety and Health Administration (OSHA) standard. Smaller or larger amounts may be used as desired.

9.3.2. Prepare at least three samples in this manner for each amount of formaldehyde tested.

9.3.2.1. Exactly 30 min after the time of addition of the standard, transfer each portion of alumina to 10 mL of the 1% methanol solution and extract for at least 1 h.

9.3.2.2. Prepare a "desorption" blank in the same manner, omitting the formaldehyde.

9.3.3. For each amount of formaldehyde tested, prepare three standards by injecting with the same syringe the same volume of standard solution A into 10 mL of the 1% methanol solution.

9.3.4. Analyze these samples, blanks, and standards as described in Section 9.2.

9.3.5. The desorption efficiency is the amount of formaldehyde found in a sample (after correction for the desorption blank) divided by the amount found for the corresponding standards.*

$$DE = \frac{S - B}{St} ,$$

where DE = desorption efficiency,

S = μg in the sample,

B = μg in the blank, and

St = μg in the standard.

*An average desorption efficiency of 0.85 has been found for amounts of formaldehyde added to alumina in the range of 10 to 37 μg.

10. Calculations

10.1. Plot the standard curve on linear graph paper with concentration of formaldehyde in μg/4 mL on the x-axis and absorbance on the y-axis.

10.2. Subtract the absorbance of the reagent blank from the absorbance of the samples.

10.3. Determine the formaldehyde content of the samples from the standard curve.

10.4. Calculate the total amount of formaldehyde in the sample using the following equation:

$$W = \frac{2.5}{DE} \times (W_1 + W_2 - W_b) \quad ,$$

where W = total amount of formaldehyde in the sample (μg),

2.5 = factor to correct for dilution,

DE = desorption efficiency,

W_1 = amount of formaldehyde found in the extract of the first sorbent section (μg),

W_2 = amount found in the extract of the backup sorbent section (μg), and

W_b = total amount found in the blank tube (μg).

10.5. The concentration of formaldehyde in air may be expressed in mg/m^3, which is numerically equivalent to μg/L.

$$C = \frac{W}{V} \quad ,$$

where C = concentration (mg/m^3) of formaldehyde in air,

V = volume of air sampled (L), and

W = total amount of formaldehyde (μg) from Step 10.4.

10.6. The concentration may also be expressed in terms of parts per million by volume at standard conditions of 25°C and 760 mm Hg.

$$C = \frac{W}{V} \times \frac{24.45}{MW} \times \frac{760}{P} \times \frac{(T + 273)}{298} \quad ,$$

where C = concentration of formaldehyde (ppm),

W = total amount of formaldehyde (μg),

V = volume of air sampled (L),

24.45 = molar volume (L) at standard conditions of 25°C and 760 mm Hg,

MW = molecular weight of formaldehyde (30.03),

P = pressure of air sampled (mm Hg), and

T = temperature of air sampled (°C).

11. Source Materials

11.1. F. Feigl, *Spot Tests in Organic Analysis*, 7th ed. (American Elsevier Publishing Company, New York, 1966), p. 434.

11.2. E. Eegriwe, "Reaktionen und Reagenzien zum Nachweis Organischer Verbindungen IV," *Z. Anal. Chem.* **110**, 22 (1937).

11.3. S. F. Sleva, "Selected Methods for the Measurement of Air Pollutants," Public Health Service Publication No. 999-AP-11, H-1 (1965).

11.4. A. P. Altshuller, L. J. Leng, and A. F. Wartburg, "Source and Atmospheric Analyses for Formaldehyde by Chromotropic Acid Procedure," *Int. J. Air Water Pollut.* **6**, 381 (1962).

11.5. E. E. Campbell, G. O. Wood, and R. G. Anderson, "Development of Air-Sampling Techniques," Los Alamos Scientific Laboratory report LA-5973-PR (July 1975).

11.6. Intersociety Committee, *Methods of Air Sampling and Analysis* (American Public Health Association, Washington, DC, 1972), pp. 194-198.

11.7. W. E. MacDonald, "Formaldehyde in Air—A Specific Field Test," *Am. Ind. Hyg. Assoc. Q.* **15**, 217 (1954).

11.8. F. P. Treadwell and W. T. Hall, *Analytical Chemistry, Vol. II*, 9th English ed. (John Wiley & Sons, Inc., New York, 1951), pp. 588-590.

11.9. G. O. Wood and R. G. Anderson, "Development of Air-Monitoring Techniques Using Solid Sorbents," Los Alamos Scientific Laboratory report LA-6216-PR (February 1976).

FORMALDEHYDE IN AIR - IMPINGER COLLECTION

Analyte: Formaldehyde	**Method No.:** IH210
Matrix: Air	**Range:** 0.1-5.0 ppm
Procedure: Collection in impingers containing 1% sodium sulfite, reaction with chromotropic acid-sulfuric acid solution and spectrophotometric analysis	**Precision:** ±5%
Effective Date: 09/01/84 to 09/10/92	**Contact Person:** Carol Sutcliffe

1. **Principle of Method**

   1.1. Sample is collected by pulling air through impingers filled with a solution of sodium sulfite.

   1.2. Formaldehyde reacts with chromotropic acid-sulfuric acid solution to form a purple monocationic chromogen. The absorbance of the colored solution is read in a spectrophotometer at 580 nm and is proportional to the quantity of formaldehyde in the solution (see Source Materials 12.2., 12.3., and 12.5.).

2. **Range and Sensitivity**

   2.1. From 0.1 μg/mL to 5.0 μg/mL of formaldehyde can be measured in the color-developed solution.

   2.2. A concentration of 0.1 ppm of formaldehyde can be determined in a 25-L air sample based on an aliquot of 4 mL from 20 mL of absorbing solution and a difference of 0.05 absorbance unit from the blank.

3. **Interferences**

   3.1. The chromotropic acid procedure has very little interference from other aldehydes. Saturated aldehydes give less than 0.01% positive interference, and the unsaturated aldehyde acrolein results in a few percent positive interference. Ethanol and higher molecular weight alcohols and olefins in mixtures with formaldehyde are negative interferences. However, concentrations of alcohols in air are usually much lower than formaldehyde concentrations and are not a serious interference.

   3.2. Phenols result in a 10 to 20% negative interference when present at an 8:1 excess over formaldehyde. They are, however, ordinarily present in the atmosphere at lower concentrations than formaldehyde and, therefore, are not a serious interference.

3.3. Ethylene and propylene in a 10:1 excess over formaldehyde result in a 5 to 10% negative interference, and 2-methyl-1,3-butadiene in a 15:1 excess over formaldehyde showed a 15% negative interference. Aromatic hydrocarbons also constitute a negative interference (see Source Material 12.5.). It has been found that cyclohexanone causes a bleaching of the final color.*

4. Accuracy and Precision

4.1. The method was checked for reproducibility by having three different analysts in three different laboratories analyze standard formaldehyde samples. The results listed in Table I agreed within ±5%.

5. Advantages and Disadvantages

5.1. Results checked for reproducibility agreed within ±5%. See Table I.

5.2. The absorbance of the reaction product increases slowly on standing. An increase of 3% in absorbance was noted after allowing the samples to stand for one day and an increase of 10% after eight days (see Source Material 12.5.). The most stable readings are obtained after allowing the samples to stand for 2 h.

5.3. No information is available on the effect of storage on the collected air sample.

6. Apparatus

6.1. Sampling equipment.

6.1.1. A graduated midget impinger containing 15 mL of 1% sodium sulfite solution.

6.1.2. A pump suitable for delivering flow rates of 1 L/min for 24 h.

TABLE I. COMPARISON OF FORMALDEHYDE RESULTS FROM THREE LABORATORIES

Micrograms Formaldehyde	Absorbance		
	Lab 1	Lab 2	Lab 3
1	0.057	0.063	0.061
3	0.183	0.175	0.189
5	0.269	0.279	0.262
7	0.398	0.381	0.392
10	0.566	0.547	0.537
20	1.02	0.980	1.07

*Information provided by M. Feldstein, Bay Area Air Pollution Control District, March 1968.

6.1.3. An integrating volume meter such as a dry gas or wet test meter.

6.1.4. Thermometer.

6.1.5. Manometer.

6.1.6. Stopwatch.

6.2. Spectrophotometer or colorimeter: Perkin-Elmer Lambda 7.

6.3. Graduated cylinders: 25-mL.

6.4. Glass pipettes: 4- and 6-mL volumetric, and 1.0-mL serologic.

6.5. Test tube with glass stopper.

6.6. Disposable micro cuvettes: 1.5-mL.

6.7. Volumetric flasks: 10-mL, brown; 100-mL and 1-L.

6.8. Balance: capable of 0.1 mg resolution.

7. Reagents

7.1. Chromotropic acid reagent. Dissolve 0.10 g of 4,5-dihydroxy-2, 7-naphthalenedisulfonic acid disodium salt in water and dilute to 10 mL. Filter, if necessary, and store in a brown bottle. Make up fresh weekly (Eastman Kodak Company, Rochester, New York, Cat. No. P230).

7.2. Sulfuric acid (concentrated).

7.3. Formaldehyde standard solution "A" (1 mg/mL). Dilute 2.7 mL of 37% formalin solution to 1 L with distilled water. The solution is stable for at least a 3-month period.

7.4. Chromerge. Add 25 mL chromium trioxide to 2 L of sulphuric acid. Add approximately 5 mL at a time and shake well (VWR Scientific).

7.5. Formaldehyde standard solution "B" (10 µg/mL). Dilute 1 mL of standard solution "A" to 100 mL with 1% sodium sulfite. Make up fresh daily.

7.6. Sodium sulfite, $NaSO_3$ (1%). Dissolve 1 g of sodium sulfite in 100 mL of water. Prepare a fresh solution weekly.

8. Collection and Storage of Samples

8.1. Cleaning of equipment. Care must be exercised to ensure the absence of probable contaminants like organic materials that can be charred by concentrated sulfuric acid. Wash glassware with soap and rinse with distilled water. Soak in Chromerge solution (VWR) for 10 min, rinse with distilled water, and dry in an oven at 150°C for 1 h.

8.2. Pour 15 mL of the absorbing solution (1% sodium sulfite) into each graduated midget impinger.

8.3. Connect two impingers in series to the vacuum pump (via the absorption tube) and the prefilter assembly (if needed) with short pieces of flexible tubing. The minimum amount of tubing necessary to make the joint between the prefilter and impingers should be used. The air being sampled should not be passed through any other tubing or other equipment before entering the impingers.

8.4. It has been recommended that two impingers must be used in series because, under conditions of sampling, the collection efficiency of only one impinger is approximately 80%. With two impingers in series the total collection efficiency is approximately 95%. The contents of each impinger should be analyzed separately.

8.5. Turn on pump to begin sample collection. Care should be taken to measure the flow rate, time, and/or volume as accurately as possible. The sample should be taken at a flow rate of 1 L/min.

8.6. Record the temperature and pressure before and after sampling.

8.7. After sampling, the impinger stem can be removed and cleaned. Tap the stem gently against the inside wall of the impinger bottle to recover as much of the sampling solution as possible. Wash the stem with a small amount (1-2 mL) of unused absorbing solution and add the wash to the impinger. Seal the impinger with a hard, nonreactive stopper (preferably Teflon). Do not seal with rubber.

8.8. Care should be taken to minimize spillage or loss by evaporation at all times. Refrigerate samples if analysis cannot be done within a day.

8.9. A "blank" impinger should be handled as the other samples (fill, seal, and transport) except that no air is sampled through this impinger.

9. Procedure

9.1. Transfer the sample from each impinger to a 25-mL graduate. Bring sample back to 15 mL volume with 1% sodium sulfite.

9.2. Pipette a 4-mL aliquot from each of the sampling solutions into glass-stoppered test tubes. Run a blank containing 4 mL of 1% sodium sulfite. If the formaldehyde content of the aliquot exceeds the limit of the method, a smaller aliquot diluted to 4 mL with 1% sodium sulfite is used.

9.3. Add 0.1 mL of 1% chromotropic acid reagent to the solution and mix.

9.4. To the solution pipette **slowly and cautiously** 6 mL of concentrated sulfuric acid.

NOTE: The solution becomes extremely hot during the addition of the sulfuric acid. If the acid is not added slowly, some loss of sample could occur because of spattering.

9.5. Allow to sit at room temperature for 2 h. Read at 580 nm in a suitable spectrophotometer using a 1.5 mL cell. Determine the formaldehyde content of the sampling solution from a curve previously prepared from standard formaldehyde solutions.

9.6. During the analysis procedure, it is good practice to group together the two impingers from each sampling series and label them as "A" and "B". The formaldehyde content calculated in "A" is added to that calculated in "B" to give the total amount sampled in the atmosphere by the impingers in series.

10. Calibration and Standards

10.1. Pipette the following volumes of standard solution "B" into glass-stoppered test tubes.

Volume of Standard "B" (mL)	Concentration of Formaldehyde (µg/mL)
0	0
0.1	0.25
0.3	0.75
0.5	1.25
0.7	1.75
1.0	2.50
2.0	5.00

10.2. Dilute each standard to 4 mL with 1% sodium sulfite.

10.3. Develop the color as described in the analysis procedure (Steps 9.3. through 9.5.).

10.4. Plot absorbance on the x-axis against concentration of formaldehyde in the color-developed solution and obtain a least-squares fit.

11. Calculations

11.1. Convert the volume of air sampled (V) to the volume of air at standard conditions (V_S) of 760 mm of mercury and 25°C, using the correction formula:

$$V_S = V \times \frac{P}{760} \times \frac{298}{(T + 273)} \quad ,$$

where V_S = volume of air at standard conditions (L),

V = volume of air sampled (L),

P = barometric pressure of mercury (mm), and

T = temperature of sample air (°C).

11.2. Determine the total concentration (C_t) of formaldehyde present in the two sample impingers in series, A and B.

$$C_t = C_A \times F_A + C_B \times F_B \quad ,$$

where C_t = total μg of formaldehyde in the sample,

C_A and C_B = respective formaldehyde concentration in μg/mL of the sample aliquots taken from impingers A and B as determined from the calibration curve, and

F_A and F_B = respective aliquot factor, sampling solution volume (mL).

11.3. The concentration of formaldehyde in the sampled atmosphere may be calculated using the following equation, assuming standard conditions are taken as 760 mm of mercury and 25°C:

$$\text{ppm (volume)} = \frac{C_t \times 24.47}{V_S \times MW} \quad ,$$

where V_S = air sampled at standard conditions (L),

MW = molecular weight of formaldehyde (30.03), and

24.27 = μL of formaldehyde gas in one micromole at 760 mm Hg and 25°C.

12. Source Materials

12.1. A. P. Altshuller, L. J. Leng, and A. F. Wartburg, "Source and Atmospheric Analyses for Formaldehyde by Chromotropic Acid Procedure," *Int. J. Air Wat. Poll.* **6**, 381 (1962).

12.2. E. Eegriwe, "Reaktionen and Reagenzien zum Nachweis Organischer Verbindungen IV," *Z. Anal. Chem.* **110**, 22 (1937).

12.3. F. Feigl, *Spot Tests in Organic Analysis*, 7th ed. (American Elsevier Publishing Company, New York, 1966) p. 434.

12.4. W. E. MacDonald, "Formaldehyde in Air - A Specific Field Test," *Amer. Ind. Hyg. Assoc. Quarterly* **15**, 217 (1954).

12.5. S. F. Sleva, "Determination of Formaldehyde: Chromotropic Acid Method. Selected Methods for the Measurement of Air Pollutants," Public Health Service Publication No. 999-AP-11, H-1, 1965.

12.6. F. P. Treadwell and W. T. Hall, *Analytical Chemistry*, Vol. II, 9th English ed. (John Wiley & Sons, Inc., New York, 1951), p. 590.

12.7. Treadwell and Hall, p. 588.

HALOGENS AND SULFUR IN LIQUIDS - NEUTRON ACTIVATION ANALYSIS

Analyte: F, Cl, Br, and I	**Method No.:** IH214
Matrix: Oil, organic solvents, water	**Minimum Detectable Concentration:** F 10.0 µg/g Cl 0.1 µg/g Br 0.1 µg/g I 0.05 ug/g S 200.0 ug/g
Procedure: Instrumental thermal neutron activation (ITNA) analysis	**Authors:** Ernest S. Gladney Carol R. Sutcliffe Dee Seitz
Effective Date: 10/01/86 to 09/15/92	George H. Brooks

1. Principle of Method

1.1. Instrumental thermal neutron activation analysis is a rapid, multielement method that permits nearly simultaneous determination of the four halogen elements and sulfur in aqueous and organic solutions. The analysis can be automated.

1.2. Measurement of halogen and sulfur concentrations is often required by waste disposal or incineration facilities to meet the specific requirements of their Environmental Protection Agency (EPA) permits.

2. Sensitivity

2.1. The ultimate sensitivity is limited primarily by the reproducibility of the system blank. Using 1-mL samples in the standard 4-mL irradiation container at the Los Alamos Omega West Reactor, the following detection limits may be obtained in manual operation mode without transferring the sample to a "cold" container after irradiation:

Element	Detection Limit (µg/g)
F	10.0
Cl	2.0
Br	0.3
I	0.2
S	200.0

2.2. The chlorine sensitivity is strongly limited by the irradiation vial blank. If the oil is transferred to a clean container at the conclusion of the neutron irradiation but before sample counting, detection limits may be improved (at the sacrifice of fluorine measurement) to the following:

Element	Detection Limit (μg/g)
Cl	0.1
Br	0.1
I	0.05
S	200.0

3. Accuracy and Precision

3.1. Accuracy and precision for total chlorine determination in oil is demonstrated by the results of analyses of NBS SRM 1818, chlorine in oil, listed in Table I.

3.2. Accuracy and precision for total sulfur determination in oil is demonstrated in Table II by the results of analyses of NBS SRM 1819, sulfur in oil.

3.3. Accuracy and precision for fluorine, bromine, and iodine have been evaluated using in-house organohalogen preparations. These results are listed in Table III.

3.4. The great solubility of inorganic chlorides and relative insolubility of organochlorine compounds in aqueous media renders ITNA ineffective as a screening method for PCBs in water without chemical separation (e.g., absorption of organochlorine compounds on activated charcoal).

TABLE I. ITNA DETERMINATION OF CHLORINE IN NBS SRM 1818

	Chlorine (μg/g)	
SRM	**ITNA**	**Certified**
1818-I	**26.8 ± 1.4**	**29 ± 5**
1818-II	**62.2 ± 2.5**	**63 ± 4**
1818-III	**79.7 ± 2.8**	**78 ± 4**
1818-IV	**223.0 ± 4.0**	**231 ± 6**
1818-V	**549.0 ± 16.0**	**558 ± 11**

TABLE II. ITNA DETERMINATION OF SULFUR IN NBS SRM 1819

	Sulfur (μg/g)	
SRM	**ITNA**	**Certified**
1819-I	**320 ± 120**	**299 ± 8**
1819-II	**1200 ± 100**	**1070 ± 40**
1819-III	**2930 ± 270**	**2865 ± 70**
1819-IV	**6140 ± 580**	**6030 ± 130**
1819-V	**10800 ± 400**	**10500 ± 260**

TABLE III. ITNA ANALYSIS OF HALOGEN SPIKES IN OIL (μg/g)

Compound	Element	Calc. Conc. (ppm)	ITNA (ppm)
Fluorobenzene	F	1107	975 ± 200
	Cl	0	<3
	F	115	100 ± 25
	Cl	0	<3
	F	13	10 ± 4
	Cl	0	<3
Fluorobiphenyl	F	882	810 ± 160
	Cl	0	<3
	F	97	70 ± 25
	Cl	0	<3
	F	10	7 ± 4
	Cl	0	<3
Bromobenzene	Br	1489	1280 ± 100
	Cl	0	<3
	Br	104	86 ± 8
	Cl	0	<3
	Br	10.5	8.7 ± 0.8
	Cl	0	<3
2,4-Tribromo-biphenyl	Br	550	540 ± 30
	Cl	0	<3
	Br	91	80 ± 6
	Cl	0	<3
	Br	9.3	8.0 ± 0.9
	Cl	0	<3
Iodobenzene	I	1669	1570 ± 100
	Cl	0	<3
	I	108	96 ± 8
	Cl	0	<3
	I	11	10 ± 1
	Cl	0	<3
Diiodopentane	I	2403	2260 ± 200
	Cl	0	<3
	I	85	80 ± 8
	Cl	0	<3
	I	8.1	7.4 ± 0.8
	Cl	0	<3
Iodopropane	I	1816	1275 ± 90
	Cl	0	<3
	I	83	53 ± 5
	Cl	0	<3
	I	8.5	5.0 ± 0.7
	Cl	0	<3

TABLE III. ITNA ANALYSIS OF HALOGEN SPIKES IN OIL (μg/g) (cont)

Compound	Element	Calc. Conc. (ppm)	ITNA (ppm)
Combination-I	F	605	350 ± 70
	Cl	658	620 ± 40
	Br	2454	2100 ± 200
	I	1745	1600 ± 200
Combination-II	F	90	---
	Cl	98	100 ± 9
	Br	365	295 ± 30
	I	260	230 ± 20
Combination-III	F	9.2	---
	Cl	10.0	11 ± 3
	Br	37.1	29 ± 3
	I	26.4	24 ± 2

3.5. The usefulness of ITNA for screening soils and sediments for organochlorine is limited by the intense induced activity in aluminum, a major element in these materials. The use of longer decay periods before counting would reduce this interference and might prove effective for the identification of highly contaminated materials. Potential organochlorine contaminants are more effectively removed by organic solvent extraction, with ITNA screening of the extract.

4. Interferences

4.1. This procedure makes no distinction between inorganic and organic halogens or sulfur, so that aqueous sample matrices that may contain high levels of soluble inorganic elements are not adaptable to direct determination of the organic/inorganic nature of measured elements. An organic extraction separation may make this information readily available.

4.2. High concentrations of certain metals dissolved in oil will raise the Compton background in the gamma-ray spectrometer and, thereby, raise the detection limits. Manganese, sodium, and calcium are the primary elements of concern.

4.3. There is a potential spectral interference between the 617 keV gamma ray of Br-80 and a double escape from the 1642 keV line of Cl-38 that falls at 620 keV. Careful correction or attention to spectrometer resolution is required.

4.4. There is a potential spectral interference between the 3083 keV line of Ca-49 and the 3102 keV transition from S-37. Careful attention to maintain base-line resolution in this energy region is required.

5. Collection and Storage of Samples

5.1. Glass containers with Teflon-lined lids are recommended because organic liquids tend to penetrate and soften plastic containers.

6. Apparatus

6.1. Nuclear reactor: equipped with pneumatic transfer capability for the thermal column irradiation facility.

6.2. Gamma-ray spectrometer: equipped with a fixed geometry sample holder, Ge(Li) or intrinsic Ge gamma-ray detector, preamplifier, linear amplifier, high-voltage bias supply, and pulse-height analyzer. Additional data storage media (tape, disc, etc.) are desirable but not essential.

6.3. Irradiation vials ("rabbits"): 4-mL, screw-cap, polyethylene, Los Alamos National Laboratory, Los Alamos, New Mexico.

6.4. Beem vials for inserts: size 00, regular tip, Ladd Research, Burlington, Vermont.

6.5. Sample collection bottles: glass.

6.6. Transfer pipettes: disposable.

6.7. Soldering iron: adjustable temperature, Wells EC 2000.

6.8. Analytical balance: top-loading, 100-g capacity.

6.9. Electric motor: 10-100 rpm with vial holder for vial sealing.

7. Reagents

7.1. Distilled water.

7.2. Sodium chloride or potassium chloride (highest purity available).

7.3. Sodium fluoride (highest purity available).

7.4. Potassium bromide or sodium bromide (highest purity available).

7.5. Potassium iodate (highest purity available).

7.6. Potassium sulfate (highest purity available).

7.7. Elemental standard solutions (100 to 10 000 mg/L). Spex Industries, Inc., Box 798, Metuchen, New Jersey 08840.

8. Calibration and Standards

8.1. There is no need to prepare organic matrix standards since the neutron moderating properties of water and organic liquids are very similar.

8.2. Commercially prepared elemental standard solutions at concentrations of 100 to 10 000 mg/L are available.

8.3. Standard solutions may be prepared as follows:

8.3.1. Dissolve the following quantities of inorganic salts in separate 1000 mL volumes of high-purity distilled water to make 100 μg/g solutions: 0.165 g NaCl, 0.149 g KBr, 0.165 g KIO_3, 0.221 g NaF.

8.3.2. Dissolve 5.44 g of K_2SO_4 in 100 mL high-purity distilled water (10 000 μg/g solution).

8.4. Preparation of oil-base organohalogenated standards.

8.4.1. The liquid halogenated compounds in Table III are directly added to a weighed amount of blank oil, one compound per aliquot of oil. Solid compounds are first weighed into a clean glass vial and dissolved in a known amount of hexane. Weighed amounts of these solutions are then added to weighed amounts of blank oil. Final oil solution weights are obtained in both cases.

8.4.2. Lower concentrations may be prepared by serial dilution of the concentrated oil stock solutions. Weigh a known amount of the concentrated stock and dilute with a weighed amount of blank oil.

8.4.3. Place samples in a sonicator at least overnight to ensure homogeneous mixing. Mix well before each use. These standards can be stored for up to 4 months in a cool, dark area.

8.5. Calibrate the gamma-ray spectrometer daily by running several chloride standards under the same irradiation and counting conditions as those used for the samples. Daily standardization is strongly recommended although the calibration of the system has been stable over a period of several months.

9. Procedure

9.1. Sample packaging for irradiation.

9.1.1. Pipette 1 mL of the oil sample into a polyethylene reactor irradiation "rabbit."

9.1.2. Tare a top-loading balance with an empty rabbit and rabbit holder. A scintillation vial without cap is a good holder to prevent oil from spilling during weighing.

9.1.3. Weigh the rabbit with the oil sample and record the net weight of the oil in the Laboratory notebook.

9.1.4. Remove the cap from a Beem "00" vial and plug the top of the rabbit by inserting the tapered end of the Beem into the rabbit and pushing it all the way in. The fit should be tight.

9.1.5. Heat seal the Beem plug to the top of the rabbit using a soldering iron set to about 690°F.

9.1.6. Place a polyethylene screw cap on the rabbit and heat seal the cap to the rabbit body with the soldering iron while rotating the vial holder.

9.2. Sample irradiation and counting.

9.2.1. Irradiate the sample in one of the pneumatic transfer, thermal neutron facilities of the Los Alamos Omega West Reactor for 1 min. The highest available neutron flux is preferred to maintain the best detection limits. Record neutron flux read-out on the irradiation counter/timer system. Start decay stop watch as soon as the auto-eject system fires.

9.2.2. Wipe the outside of the sample vial to remove surface radioactive contamination. **RUSH** the sample to the count room and insert in slot No. 2 of the constant geometry sample holder in front of the Ge(Li) detector. Count the sample for 60 s, beginning at 20 s total decay time. Note system dead time in the notebook. If the dead time exceeds 10%, these data are not acceptable, and reirradiation after Step 9.2.6. with counting at another more distant geometry will be necessary. Only fluorine is determined on this initial count.

9.2.3. Transfer the data to magnetic tape or disc for off-line data reduction. If these storage media are unavailable, integrate the 1633 keV F-20 line manually on the CRT display of the multichannel analyzer (MCA) and record this peak area information in the notebook.

9.2.4. Briefly count the sample on the MCA to determine dead time. If dead time still exceeds 10%, move the sample further back in the holder until a dead time of less than 10% is achieved. Record the geometry setting in the notebook. Be sure to erase MCA memory.

9.2.5. Count the sample for 200 s, beginning at 2 min total decay time.

9.2.6. Transfer the data to magnetic tape or disc for off-line data reduction. If these storage media are unavailable, integrate the gamma-ray peaks shown in Table IV (except F) manually on the CRT display of the MCA and record this peak area information in the notebook.

TABLE IV. ISOTOPES USED IN ITNA DETERMINATIONS

Isotope	Half-Life	Gamma-Ray Energy (keV)
F-20	11.0 s	1633
S-37	5.0 min	3102
Cl-38	37.2 min	2167
Br-80	17.7 min	617
I-128	25.0 min	442

9.2.7. Repeat Steps 9.2.1. through 9.2.5. for each sample. Each day run at least three blanks and three elemental standards in each counting geometry used.

10. Operation of Equipment

10.1. See the gamma-ray spectrometry instrument procedure.

11. Calculations

11.1. Total elemental content of the sample is determined using the following equation:

$$Cl = \frac{(A - B) \times C}{(D - B) \times E} ,$$

where A = gross peak area of sample,

B = gross peak area of blank,

C = weight of element in standard (μg),

D = gross peak area of standard, and

E = sample weight (g).

11.2. The halogen concentration of the organohalogen compounds dissolved in oil is calculated as follows:

$$X_1 = \frac{XW \times P \times 10^6}{TW} ,$$

where X_1 = concentration of halogen in oil (μg/g),

XW = weight of halogen compound added to blank oil (g),

P = wt % of halogen present in halogenated compound, and

TW = total weight of oil plus compound.

Concentrations in dilutions are calculated as follows:

$$X_2 = \frac{WX_1 \times X_1}{TW} ,$$

where X_2 = concentration of halogen in diluted standard (μg/g),

WX_1 = weight of concentrated standard used (g),

X_1 = concentration of concentrated standard (μg/g), and

TW = total weight of new diluted standard (g).

12. Source Material

12.1. E. S. Gladney, D. B. Curtis, D. R. Perrin, J. W. Owens, and W. E. Goode, "Nuclear Techniques for the Chemical Analysis of Environmental Materials," Los Alamos Scientific Laboratory report LA-8192-MS (January 1980).

METALS ON AIR FILTERS—NIOSH PAT SAMPLES

Analyte: Cadmium, lead, zinc, and chromium	**Method No.:** IH220
Matrix: Filters	**Accuracy and Precision:** 10-20% ± 10%
Procedure: Acid digestion and atomic absorption spectrometry	**Detection Limit:** 0.1 μg/filter
Effective Date: 02/04/85	**Author:** Malti Bhatia

SAFETY NOTE: Before beginning this procedure, read all of the Material Safety Data Sheets for the chemicals listed in Sec. 5. Read Sec. 4.3 of the EM-9 Safety Manual for information on personal protective clothing and equipment. Read Sec. 10 of this procedure and Source Material 11.3 for proper waste disposal practices.

1. Principle of Method

1.1. Filters are wet-ashed using nitric acid and perchloric acid to destroy the organic matrix.

1.2. The resulting solutions are aspirated into the air-acetylene flame of an atomic absorption spectrophotometer and the absorbance measured. The absorbance is proportional to the concentration of the analyte.

2. Interferences

2.1. These volatile metals may be lost during prolonged heating if samples are allowed to go to dryness.

2.2. Environmental concentrations of Zn may cause contamination.

3. Collection and Storage of Samples

3.1. Filters are stored at room temperature.

4. Apparatus

4.1. Aluminum block: 23.5- by 10-cm with 3.4-cm-diam holes 8.5-cm deep, to receive 100-mL centrifuge tubes.

4.2. Sea sand: 1-2 cm is placed in the bottom of the block holes.

4.3. Hot plate: Thermolyne Type 2600, to hold aluminum block.

4.4. Atomic absorption spectrophotometer: Perkin Elmer Model 5000.

4.5. Air-acetylene burner head: 3-slit for Cd, Pb, and Cr.

4.6. Air-acetylene burner head: single-slit for Zn.

4.7. Hollow-cathode or electrodeless discharge lamps (EDLs): for Cd, Pb, Zn, and Cr. EDL lamps are preferred over hollow-cathode lamps.

4.8. Centrifuge tubes: 100-mL, Pyrex.

4.9. Watch glasses: 4-cm-diam.

4.10. Pipettes: Class A or equivalent automatic pipettes.

4.11. Polystyrene centrifuge tubes: 15-mL.

5. Reagents

5.1. Nitric acid (concentrated, reagent-grade): redistilled in Teflon sub-boiling still.

5.2. Perchloric acid (concentrated, reagent-grade, ultrapure).

5.3. Cadmium, zinc, lead, and chromium stock standards (1000 mg/L): Spex Industries, Inc., Edison, NJ 08820.

5.4. Air and acetylene gases.

6. Calibration and Blank Spikes

6.1. Calibration standards. Calibrate the instrument using standards with the concentrations tabulated below.

Zn[a] (mg/L)	Zn (mg/L)	Cd (mg/L)	Pb (mg/L)	Cr (mg/L)
0.0	0.0	0.0	0.0	0.0
0.5	0.25	0.05	0.5	0.5
2.5	0.5	0.25	1.0	1.0

Zn[a] (mg/L)	Zn (mg/L)	Cd (mg/L)	Pb (mg/L)	Cr (mg/L)
5.0	1.0	0.5	2.5	2.0
10.0[b]	1.5	1.0[b]	5.0[b]	4.0[b]
25.0[b]	2.0[b]	2.0[b]	10.0[b]	5.0[b]

[a] Use these higher-concentration standards if burner head is in the diagonal position (see Step 7.9).

[b] Standards used for instrument calibration; the rest are used to check instrument performance and linearity of absorbance readings.

6.2. Calibration standards should be validated against QCs of known value.

6.3. Spike three filters with the amounts shown below to run through the digestion procedure as QCs.

Filter	Zn (μg/filter)	Cd (μg/filter)	Pb (μg/filter)	Cr (μg/filter)
1	75	7.5	20	10
2	100	10.0	40	20
3	150	15.0	60	40

7. Procedure

7.1. Place the blank, spikes, QCs, and sample filters into 100-mL centrifuge tubes. Push each filter to the bottom of its tube.

7.2. Add 8 mL of concentrated nitric acid and 200 μL of perchloric acid to each tube and cover with a watch glass.

7.3. Place the tubes in an aluminum block and heat in a fume hood at approximately 150°C until all the nitric acid has evaporated and white clouds of perchloric acid fumes are observed. Do not let the contents go completely dry.

7.4. The liquid in the tubes should be clear when the filters are completely dissolved.

7.5. Cool the tubes.

7.6. Bring the residual liquid up to 10 mL with 2.5% nitric acid.

7.7. Transfer contents to 15-mL polystyrene centrifuge tubes.

7.8. Analyze each sample by atomic absorption.

7.9. Proficiency Analytical Testing (PAT) samples for zinc have high concentrations that require dilution. One way to avoid dilution errors is to use the air-acetylene burner head in a diagonal position in the optical path rather than the normal parallel position. Care should be taken to make sure that the burner head is engaged in a slot. Higher-concentration standards should be used if this is done. Standards should be calibrated only after the change in the burner head position has been made.

8. Operation of Instrument

8.1. Procedures for operation of the Perkin Elmer Model 5000 can be found in *Analytical Methods for Atomic Absorption Spectrophotometry*, "Standard Conditions for Flame Operation," published by Perkin Elmer (see Source Material 10.2).

8.2. Recommended flame conditions for Pb, Zn, and Cd is lean blue and for Cr is rich yellow.

9. Calculations

9.1. Calculate concentrations of each metal as follows.

$$C = R \times D \quad ,$$

where C = concentration of metal on the filter (μg/filter),
R = result from the instrument reading (μg/mL), and
D = volume of dilution (mL).

10. Proper Waste Disposal Practices

10.1. Solid Waste

10.1.1. Solid waste contaminated with hazardous chemicals above the level of concern is not generated during this analysis.

10.1.2. If a solid waste is generated that may be contaminated at a level of concern, the appropriate paperwork is completed on a case-by-case basis.

10.1.2.1. A Waste Profile Request Form (WPRF) is completed describing the solid waste and is sent to the Waste Management group for review.

10.1.2.2. If the Waste Management group determines that the solid waste is contaminated below the level of concern, the waste is disposed of as ordinary laboratory trash.

10.1.2.3. If the Waste Management group determines that the solid waste is contaminated above the level of concern, pickup of the contaminated waste is requested as described in Sec. 10.3.

10.2. Liquid Waste

10.2.1. Liquid waste containing hazardous contaminants, such as solutions of trace metals, is accumulated in a coated glass jar in a secondary containment tray and is kept segregated from liquid waste contaminated with organic or radioactive substances or cyanide.

10.2.2. The bottle is labeled with a hazardous waste level and a label indicating its use for trace metal waste.

10.2.3. The bottle is opened only for the period of time necessary to add waste to it.

10.2.4. When the bottle is full, it is capped and kept in the secondary containment tray pending pickup by the Waste Management group.

10.2.5. A new bottle is labeled for further use.

10.3. Waste Pickup

10.3.1. Pickup by the Waste Management group of solid waste or a full bottle of liquid waste containing trace metals is requested using the current Chemical Waste Disposal Request form (CWDR). The current Waste Profile Request Form (WPRF) which describes the waste is referenced on the CWDR.

10.3.2. The Waste Management group picks up the waste for disposal in accord with Laboratory policy.

11. Source Materials

11.1. R. S. Sherman, "Stability of Beryllium on Filters When Analyzed by Atomic Absorption Spectroscopy," presented at the Rio Grande Section, American Industrial Hygiene Association Annual Meeting, Albuquerque, New Mexico, October 29, 1982.

11.2. *Analytical Methods for Atomic Absorption Spectrophotometry, Perkin Elmer 5000.* (Perkin-Elmer Corporation, Norwalk, Connecticut, 1982).

11.3. "Chemical, Hazardous, and Mixed Waste," Administrative Requirement 10-3, in *Environment, Safety, and Health Manual*, Los Alamos National Laboratory Manual, Chapter 1 (most recent edition).

Revisions or additions to the procedure are marked (▒▒▒▒▒▒▒▒). Where a section heading is marked, the entire section has been revised.

MERCURY IN URINE

Analyte: Mercury	**Method No.:** IH230
Matrix: Urine	**Detection Limit:** 0.020 µg/mL
Procedure: Oxidation, reduction, and aeration into mercury analyzer	**Precision:** 3% RSD
Effective Date: 12/07/82 to 01/02/92	**Author:** Ruth Sherman

1. **Principle of Method**

   1.1. The sample is oxidized with nitric acid.

   1.2. Mercury is reduced to the elemental state with stannous chloride.

   1.3 Elemental mercury is aerated from solution into a closed system.

   1.4. Transmission is measured at 253.7 nm in a quartz-windowed cell.

2. **Accuracy and Precision**

   2.1. The relative standard deviation of the analytical measurement is approximately 3%.

   2.2. Ten quality control samples spiked from 0.04 to 0.08 µg/mL gave recoveries of 101% ±5%.

3. **Advantages and Disadvantages**

   3.1. The procedure is free from interferences due to organic matter or other volatile constituents of the sample.

   3.2. Sensitivity is 100 times greater than flame atomic absorption spectrophotometry.

   3.3. Large amounts of easily reducible elements must be absent from the sample.

4. **Apparatus**

   4.1. Coleman Mercury Analyzer MAS-50.

   4.2. Erlenmeyer flasks: 125-mL.

   4.3. Pipettes: Eppendorf or equivalent, various sizes.

   4.4. Volumetric flasks: 10-mL and 100-mL.

5. **Reagents**

5.1. Hydrochloric acid (6N). **Slowly and with stirring** add 60 mL of concentrated hydrochloric acid to 60 mL of H_2O.

5.2. Stannous chloride (20%). Dissolve 20 g of stannous chloride in 100 mL 6N HCl.

5.3. Mercury standard. Certified atomic absorption standard, 1000 ppm mercuric chloride in distilled water. Fisher Scientific Company, Fair Lawn, New Jersey.

6. **Calibration and Standards**

6.1. Prepare a 100 ppm standard solution by pipetting 1 mL of 1000 ppm mercury standard into a 10-mL volumetric flask and diluting to volume with H_2O.

6.2. A 1 ppm working mercury standard is prepared by pipetting 1 mL of the 100 ppm solution into a 100-mL volumetric flask and diluting to volume with H_2O.

6.3. Place 1 mL of blank urine in each of four 125-mL Erlenmeyer flasks.

6.4. Prepare calibration standards by adding 20, 40, 50, and 100 μL respectively of 1 ppm mercury standard solution to each separate flask. This gives concentrations of 0.02, 0.04, 0.05, and 0.1 μg/mL of urine.

7. **Procedure**

7.1. The calibration standards are run through the entire procedure along with the samples.

7.2. Place 1 mL of the urine sample into a 125-mL Erlenmeyer flask.

7.3. Add 5 mL of concentrated HNO_3.

7.4. Allow all flasks to stand for 3 min.

7.5. Add 100 mL of water to each flask.

7.6. Add 1 mL of 20% stannous chloride to the first sample and immediately aerate into the instrument.

7.7. Read the concentration of the sample directly from the instrument.

7.8. Repeat Steps 7.6. and 7.7. for the rest of the unknown and calibration samples.

8. **Operation of the Instrument**

8.1. Procedures for operation of the instrument are described in the Perkin-Elmer Coleman Mercury Analyzer MAS-50 Operating Manual.

9. Calculations

9.1. Plot the standard curve on linear graph paper with concentration in μg/mL on the x-axis and instrument reading on the y-axis.

9.2. Plot the instrument reading of the samples on the curve to determine sample concentration.

10. Source Materials

10.1. *Perkin-Elmer Coleman Mercury Analyzer MAS-50 Operating Manual* (Perkin-Elmer Corp., Norwalk, Connecticut, 1972), pp. 50-900.

10.2. *NIOSH Manual of Analytical Methods*, 2nd ed., Vol. 1 (U.S. Government Printing Office, Washington, D.C., 1977), pp. 165-1 to 165-7.

METALS - GENERAL PROCEDURE

Analyte: Trace Metals, see Tables I and II	**Method No.:** IH240
Matrix: Air	**Precision:** 3% RSD
Procedure: Filter collection, acid digestion, atomic absorption spectrophotometry	**Detection Limit and Sensitivity:** Varies with analyte
Effective Date: 12/07/82 to 01/02/92	**Contact Person:** Ruth Sherman

1. Principle of Method

1.1. The procedure is a general method for the dissolution and determination of trace metals in industrial and ambient airborne material.

1.2. Collect samples on cellulose ester membrane filters and treat with nitric acid to ash the organic matrix and to dissolve the metals present in the sample.

1.3. The analysis is made by atomic absorption spectrophotometry (AAS).

1.3.1. Aspirate samples and standards into the appropriate AAS flame.

1.3.2. A source of characteristic radiant energy is necessary for each metal. The absorption of this characteristic energy by the atoms of interest in the flame is related to the concentration of the metal in the aspirated sample.

1.3.3. The flames and operating conditions for each element are listed in Table I.

2. Working Range, Sensitivity, and Detection Limit

2.1. The sensitivity, detection limit, and optimum working range for each metal are given in Table II.

2.2. The sensitivity is defined as the concentration of a given element that will absorb 1% of the incident radiation (0.0044 absorbance units) when aspirated into the flame.

2.3. The detection limit is defined as the concentration of a given element that produces a signal equivalent to two times the standard deviation of the blank signal for aqueous solutions. Detection limits and blank values for real samples may be greater than those given in Table II because the blanks resulting from the reagents and the filter material have not been taken into account.

2.4. The working range for an analytical precision better than 3% is generally defined as those sample concentrations that will absorb greater than 10% of the incident radiation and are in the linear region of the calibration curve.

TABLE I. INSTRUMENT PARAMETERS

Element	Type of Flame o = oxidizing r = reducing	Analytical Wavelength (nm)	Interferences[b]	Remedy[b]	Source Material
Ag	Air-C_2H_2(o)	328.1	IO_3^{-1},WO_4^{-2},MN_4^{-3}	c	5
Al[a]	N_2O-C_2H_2(r)	309.3	Ionization, V,Fe,HCl	c,d,e	4,6
As	Air-C_2H_2(o)	193.7	Background absorption	g	6
Ba	N_2O-C_2H_2(r)	553.6	Ionization, large conc. of Ca	d,f	1,4
Be[a]	N_2O-C_2H_2(r)	234.9	Al,Si,Mn	e,c,g	4
Bi	Air-C_2H_2(o)	223.1		g	
Ca	Air-C_2H_2(o) N_2O-C_2H_2(r)	422.7	Ionization and chemical	d,e	1,4
Cd	Air-C_2H_2(o)	228.8		e,g	
Co[a]	Air-C_2H_2(o)	240.7		e,g	
Cr[a]	Air-C_2H_2(o)	357.9	Fe,Ni	e,c	4
Cu	Air-C_2H_2(o)	324.8			
Fe	Air-C_2H_2(o)	248.3	High Ni conc.,Si	c,g	1,4
In	Air-C_2H_2(o)	303.9	Al,Mg,Cu,Zn,$H_xPO_4^{x-3}$	c	10
K	Air-C_2H_2(o)	766.5	Ionization	d	1,4
Li	Air-C_2H_2(o)	670.8	Ionization	d	11
Mg	Air-C_2H_2(o) N_2O-C_2H_2(r)	285.2	Chemical ionization	e d	1,4
Mn	Air-C_2H_2(o)	279.5			
Mo	N_2O-C_2H_2(r)	313.5	Ca and other ions	e,h	6
Na	Air-C_2H_2(o)	589.6	Ionization	e	1,4
Ni	Air-C_2H_2(o)	232.0		e,g	
Pb	Air-C_2H_2(o)	217.0 283.3	Ca,High conc., $SO_4^{=}$	e,c,g	7
Pd	Air-C_2H_2(o)	247.6	Al,Co,Ni,Pt,Rh,Ru	e	6
Rb	Air-C_2H_2(o)	780.0	Ionization	d	1,8
Si	N_2O-C_2H_2(r)	251.6	Avoided by not using multi-element lamp containing Fe		

TABLE I. INSTRUMENT PARAMETERS (cont)

Element	Type of Flame o = oxidizing r = reducing	Analytical Wavelength (nm)	Interferences[b]	Remedy[b]	Source Material
Sr	Air-C_2H_2(o) N_2O-C_2H_2(r)	460.7	Ionization and chemical	d,e	1,8
Te	Air-C_2H_2(o)	241.3		g	6
Tl	Air-C_2H_2(o)	276.8			
Va	N_2O-C_2H_2(r)	318.4			
Zn	Air C_2H_2(o)	213.9		g	

[a]Some compounds of these elements will not be dissolved by the procedure described here. When determining these elements, one should verify that the types of compounds suspected in the sample will dissolve using this procedure (see Step 3.2.).

[b]High concentrations of silicates in the sample can cause an interference for many of the elements in this table and may cause aspiration problems. No matter what elements are being measured, if large amounts of silicates are extracted from the samples, the samples should be allowed to stand for several hours and centrifuged or filtered to remove the silicates.

[c]Samples are periodically analyzed by the method of standard additions to check for chemical interferences. If interferences are encountered, determinations must be made by the standard additions method or, if the interferent is identified, it may be added to the standards.

[d]Ionization interferences are controlled by bringing all solutions to 1000 µg/mL $CsNo_3$ (samples and standards) or 0.2 mL/10 mL sample.

[e]1000 µg/mL solution of La as a releasing agent is added to all samples and standards. A releasing agent releases an element from its matrix.

[f]In the presence of very large Ca concentrations (greater than 0.1%) a molecular absorption from $CaOH_2$ may be observed. This interference may be overcome by using background correction when analyzing for Ba.

[g]Use D_2 or H_2 continuum for background correction.

[h]Add 1000 µg/mL $AlNO_3$ to both standards and samples.

TABLE II. SENSITIVITY DATA

Element	Sensitivity[a] (μg/mL)	Solution Detection Limits[a] (μg/mL)	Range[a,b] (μg/mL)	Range[a,b] ($\mu g/m^3$)[c,d]	Minimum[e,f] TLV $\mu g/m^3$
Ag	0.06	0.002	0.5–4.0	21–170	10 (metal and soluble compounds)
Al	1.0	0.02	5–50	210–2100	NL
As	0.8	0.2	10–50	420–2100	50 (arsenic trioxide production)
					500 (arsenic and compounds as As)
Ba	0.4	0.008	1–25	42–1050	500 (soluble compounds)
Be	0.025	0.001	0.1–2.0	4.2–84	2
Bi	0.5	0.025	1–30	42–1250	NL
Ca	0.08	0.005	0.1–5.0	4.2–210	2 000 (CaO)
Cd	0.025	0.001	0.1–2.0	4.2–84	50 (metal dust, soluble salts, cadmium oxide fume)
Co	0.15	0.01	0.5–5.0	21–210	50 (metal fume and dusts)
Cr	0.1	0.003	0.5–5.0	21–210	500 (soluble chromic, chromous salts)
					100 (chromic acid and chromate, as CrO_3)
					100 (chromite ore processing, as CrO_3)
Cu	0.09	0.002	0.5–5.0	21–210	1 000 (dust and mists)
					200 (fume)
Fe	0.12	0.005	0.5–5.0	21–210	5 000 (iron oxide fume, as iron oxide)
					1 000 (soluble compounds)
In	0.7	0.02	5–50	210–2100	100 (metal and compounds)
K	0.04	0.002	0.1–2.0	4.2–84	2 000 (as KOH)
Li	0.035	0.0003	0.1–2.0	4.2–84	25 (as lithium hydride)
Mg	0.007	0.0001	0.05–0.50	2.1–21	10 000 (as magnesium oxide fume)
Mn	0.055	0.002	0.5–3.0	21–125	5 000 (metal and compounds)
Mo	0.5	0.02	15–40	625–1650	5 000 (soluble, as Mo)
					10 000 (insoluble, as Mo)
Na	0.015	0.0002	0.05–1.0	2.1–42	2 000 (as NaOH)
Ni	0.15	0.005	0.5–5.0	21–210	100 (metal and soluble compounds)
Pb	0.5	0.01	1–20	42–840	150 (inorganic compounds, fumes and dusts)
Pd	0.25	0.02	4–15	170–625	NL

TABLE II. SENSITIVITY DATA (cont)

Element	Sensitivity[a] (μg/mL)	Solution Detection Limits[a] (μg/mL)	Range[a,b] (μg/mL)	Range[a,b] ($\mu g/m^3$)[c,d]	Minimum[e,f] TLV $\mu g/m^3$
Rb	0.1	0.002	0.5–5.0	21–210	NL
Si	1.8	0.02	50–150	2100–6300	10 000
Sr	0.12	0.002	0.5–5.0	21–210	NL
Te	0.5	0.03	5–25	210–1050	100
Tl	0.5	0.01	5–20	210–840	100 (soluble compounds)
Va	1.7	0.04	10–150	420–6300	500 (V_2O_5 dust)
					50 (V_2O_5 fume)
Zn	0.018	0.001	0.1–1.0	4.2–42	5 000 (ZnO fume)

[a]Data from "Analytical Methods for Atomic Absorption Spectrophotometry," Perkin-Elmer Corporation, Norwalk, Connecticut (1976).

[b]Data from "Analytical Methods for Flame Spectroscopy," Varian Techtron, Australia (1972).

[c]The atmospheric concentrations were calculated assuming a collection volume of 0.24 m^3 (2 Lpm for 2 h) and an analyte volume of 10 mL for the entire sample.

[d]For elements whose Threshold Limit Value (TLV) is less than the lower limits of the range, a larger sample volume will be required. TLVs refer to airborne concentrations of substances and represent conditions under which it is believed that nearly all workers may be repeatedly exposed day after day without adverse effect.

[e]TLVs of airborne contaminants and physical agents with intended changes adopted by the American Conference of Governmental Industrial Hygienists (ACGIH) for 1976. All values listed are expressed as elemental concentrations except as noted.

[f]NL signifies No Limit expressed for this element or its compounds.

2.5. The values for the sensitivity and detection limits are instrument dependent and may vary from instrument to instrument.

3. Interferences

3.1. The known interferences and correction methods for each metal are indicated in Table I. The methods of standard additions and background monitoring and correction are used to identify the presence of an interference problem. The matrices of the standards and samples are matched to minimize possible interference problems.

3.1.1. Background or nonspecific absorption can occur from particles produced in the flame that can scatter the incident radiation causing an apparent absorption signal. Light scattering problems may be encountered when solutions of high salt content are being analyzed. Light scattering problems are most severe when measurements are made at the lower wavelengths below about 250 nm. Background absorption may also occur as the result of the formation of various molecular species that can absorb light. The background absorption should be accounted for by the use of background correction techniques (use of D_2 or H_2 continuum or a nearby nonabsorbing wavelength).

3.1.2. Spectral interferences occur as the result of an atom different from that being measured absorbing a portion of the incident radiation. Such interferences are extremely rare in atomic absorption. In some cases, multi-element hollow cathode lamps having closely adjacent radiation lines from two different elements may cause a spectral interference. In such instances, multi-element hollow cathode lamps should not be used. Narrower spectral slits or alternate wavelengths may be used to alleviate the problem.

3.1.3. Ionization interferences can occur when easily ionized atoms are being measured. The degree to which such atoms are ionized is dependent upon the atomic concentration and presence of other easily ionized atoms in the sample. Ionization interferences can be controlled by the addition to the sample of a high concentration of another easily ionized element that will buffer the electron concentration in the flame. Typically, 1000-2000 μg/mL of an alkali metal (K, Na, Cs) salt is added to sample and standard solutions.

3.1.4. Chemical interferences occur in atomic absorption spectrophotometry when species present in the sample cause variations in the degree to which atoms are formed in the flame. Such interferences may be corrected by controlling the sample and standard matrix, by using the method of standard additions, or by using a higher temperature flame.

3.1.5. Physical interferences may result if the physical properties of the sample vary significantly. Changes in viscosity and surface tension can affect the sample aspiration rate and thus cause erroneous results. Sample dilution or the method of standard additions or both are used to correct such interferences. High concentrations of silicates in the sample can cause an interference for

many of the elements and may cause aspiration problems. No matter what elements are being measured, if large amounts of silicates are extracted from the samples, the samples should be allowed to stand for several hours and should be centrifuged to remove the silicates.

3.2. The procedure describes a generalized method for sample preparation that is applicable to the majority of samples of interest. There are, however, some relatively rare chemical forms of a few of the elements listed in Table I that will not be dissolved by this procedure. If such chemical forms are suspected, results obtained using this procedure should be compared with those obtained using an appropriately altered dissolution procedure. Alternatively, the results may be compared with values obtained utilizing a nondestructive technique that does not require sample dissolution (for example, x-ray fluorescence, activation analysis).

4. Accuracy and Precision

4.1. The relative standard deviation of the analytical measurement is approximately 3% when measurements are made in the ranges listed in Table II. The overall relative standard deviation will be somewhat larger than this value because of errors associated with the sample collection and preparation steps.

4.2. Collaborative testing of this method by 16 laboratories, using filters loaded at three concentration levels in a dynamic aerosol generation and sampling system, indicated that the average percent recoveries and standard deviations for representative metals are: Cd, 100.8 ±9.9; Co, 97.6 ±13.9; Cr, 96.6 ±10.8; Ni, 98.6 ±10.3; and Pb, 98.7 ±12.2.

5. Advantages and Disadvantages

5.1. The sensitivity is adequate for all metals in air samples provided an adequate volume of air is sampled.

5.2. This method has been evaluated for Be, Cd, Co, Cr, Cu, Mn, Mo, Ni, and Pb and collaboratively tested for Cd, Co, Cr, Ni, and Pb.

5.3. A disadvantage of the method is that approximately 2 mL of solution is necessary for each metal determination. Also, the necessary dilution limits the detection of small quantities of analyte or replicate analyses of several elements per sample.

6. Apparatus

6.1. Cellulose ester membrane filter: 0.8-μm pore size, 37-mm, Millipore Type AA or equivalent.

6.2. Phillips or Griffin beakers: 12.5-mL with watch-glass covers.

6.3. Graduated centrifuge tubes: 15-mL.

6.4. Volumetric flasks: 10-, 100-, and 1000-mL.

6.5. Polyethylene bottles: 125-mL.

6.6. Additional auxiliary glassware such as pipettes and different size volumetric glassware will be required depending on the elements being determined and the dilutions required to have sample concentrations above the detection limit and in the linear response range (see Table II). All pipettes and volumetric flasks required in this procedure should be calibrated class A volumetric glassware.

6.7. Hot plate: suitable for operation at 165°C.

6.8. Steam bath or 100°C hot plate.

6.9. Atomic absorption spectrophotometer: equipped with burner heads for air-acetylene and nitrous oxide-acetylene flames.

6.10. Hollow cathode or electrodeless discharge lamps for each metal and a continuum lamp (D_2 or H_2).

6.11. Two-stage regulators: for air, acetylene, and nitrous oxide.

6.12. Heating tape and rheostat for nitrous oxide regulator: second regulator stage and hose connecting regulator to the instrument should be heated to approximately 60°C to prevent freeze-up.

7. Reagents and Gases

7.1. Nitric acid (68-71%). Redistilled, specific gravity 1.42, J. T. Baker Chemical Company, Phillipsburg, New Jersey.

7.2. Nitric acid (10%, V/V).

7.3. Standard stock solutions (1000 μg/mL) for each metal in Table I. Commercially prepared or prepared per instrument manufacturer's recommendations.

7.4. Lanthanum nitrate [$La(N0_3)_3 \cdot 6H_20$]. A. D. MacKay, Inc., New York, New York.

7.5. Cesium nitrate ($CsN0_3$). Aldrich Chemical Company, Milwaukee, Wisconsin.

7.6. Acetylene gas (cylinder). Use a grade specified by the manufacturer of the instrument employed. Replace cylinder when pressure drops below 100 psi.

7.7. Nitrous oxide gas (cylinder).

7.8. Air supply (with a minimum pressure of 40 psi). Filter to remove oil and water.

7.9. RBS-35 laboratory glassware cleaner. Pierce Chemical Company, Rockford, Illinois.

8. Calibration and Standards

8.1. Ionization and chemical interference suppressants.

8.1.1. Lanthanum solution (50 mg/mL).

8.1.1.1. Dissolve 156.32 g of lanthanum nitrate [$La(NO_3)_3 \cdot 6H_20$] in 2% (V/V) HNO_3.

8.1.1.2. Dilute to volume in a 1-L volumetric flask with 2% (V/V) HNO_3. When stored in a polyethylene bottle, this solution is stable for at least one year.

8.1.2. Cesium solution (50 mg/mL).

8.1.2.1. Dissolve 73.40 g of cesium nitrate ($CsNO_3$) in distilled water.

8.1.2.2. Dilute to volume in a 1-L volumetric flask with distilled water. When stored in a polyethylene bottle, this solution is stable for at least one year.

8.2. Standard metal solutions.

8.2.1. Dilute standards (100 µg metal/mL).

8.2.1.1. Pipette 10 mL of the stock (1000 µg metal/mL; Step 7.3.) into a 100-mL volumetric flask, add 10 mL HNO_3, and dilute to volume with distilled water.

8.2.1.2. Prepare these standards fresh weekly.

NOTE: Silver standards must be stored in amber bottles away from direct light.

8.2.2. Working standards.

8.2.2.1. Working standards for each metal of interest are prepared by dilution of the dilute standards (Step 8.2.1.) or the stock standards (Step 7.3.) such that the final acid concentration is approximately the same for the samples and standards (that is, 10% V/V HNO_3 in most cases).

8.2.2.2. Lanthanum or cesium is added to samples and standards as indicated in Table I so that the final concentration is 1000 µg La or Cs/mL.

8.2.2.3. Concentrations of the working standards should cover the range for the metal of interest (Table II). Prepare these solutions fresh daily.

8.2.3. Aspirate the standard solutions into the flame and record the absorbance (or concentration).

8.2.3.1. If the instrument used displays transmittance, convert these values to absorbance.

8.2.3.2. Prepare a calibration curve by plotting absorbance (units) versus metal concentration.

8.2.3.3. Fit the best fit curve (calculated by linear least-squares regression analysis) to the data points.

8.2.3.4. Use this line or the equation describing the line to obtain the metal concentration in the samples being analyzed.

8.2.4. To assure that the preparation procedure is being properly followed, spike clean membrane filters with known amounts of the elements being determined, by adding appropriate amounts of the previously described standards, and carry them through the entire procedure.

8.2.4.1. Determine the amount of metal and calculate the percent recovery.

8.2.4.2. These tests provide recovery and precision data for the procedure as it is carried out in the laboratory for the soluble compounds of the elements being determined.

8.2.5. Analysis by the method of standard additions.

8.2.5.1. In order to check for interferences, analyze samples initially and periodically by the method of standard additions and compare the results with those obtained by the conventional analytical determination.

8.2.5.2. For this method, divide the sample into three 2-mL aliquots. To one of the aliquots add an amount of metal approximately equal to that in the sample. To another aliquot add twice this amount.

NOTE: Additions should be made by micropipetting techniques so that the volume does not exceed 1% of the original aliquot volume, that is, 0.01 mL and 0.02 mL additions to a 2-mL aliquot.

8.2.5.3. Analyze the solutions and plot the absorbance readings against metal added to the original sample.

8.2.5.4. The line obtained is extrapolated to zero absorbance, and the intercept on the concentration axis is taken as the amount of metal in the original sample.

8.2.5.5. If the result of this determination does not agree to within 10% of the values obtained with the procedure described in Step 8.2.3., an interference is indicated, and standard addition techniques should be utilized for sample analysis.

9. Procedure

9.1. Cleaning of equipment.

9.1.1. Before initial use, clean glassware with a saturated solution of sodium dichromate in concentrated sulfuric acid.

NOTE: Do not use for chromium analysis.

Rinse thoroughly with warm tap water, concentrated reagent-grade nitric acid, tap water, and deionized water and then dry.

9.1.2. Soak all glassware in a mild RBS-35 detergent solution immediately after use to remove any residual grease or chemicals.

9.1.3. It is not necessary to use the chromic acid cleaning solution for glassware that has previously been subjected to the entire cleaning procedure.

9.2. Preparation of samples.

9.2.1. Transfer the samples and blanks to clean 125-mL Phillips or Griffin beakers and add 6.0 mL HNO_3.

9.2.1.1. Cover each beaker with a watch glass and heat on a hot plate at 165°C in a fume hood until the sample dissolves and a slightly yellow solution is produced. Approximately 4 h of heating will be sufficient for most air samples.

9.2.1.2. Subsequent additions of HNO_3 may be needed to completely ash and destroy high concentrations of organic material and, under these conditions, longer ashing times will be needed.

9.2.1.3. Once the ashing is complete, as indicated by a clear solution in the beaker, remove the watch glass and rinse the sample beaker with 10% HNO_3.

9.2.1.4. Place the beakers on a 100°C steam bath and allow to go to dryness.

9.2.2. Once a sample is dry, rinse the wall of the beaker with 3-5 mL of 10% HNO_3 and reheat for five minutes at 100°C to solubilize the residue.

9.2.2.1. Quantitatively transfer the solution to a 10-mL volumetric flask using 10% V/V HNO_3 to rinse the beaker.

9.2.2.2. If any elements are being determined that require the ionization buffer, add 0.2 mL of 50 mg/mL $CsNO_3$ to the volumetric flask (see Table I, footnote d).

9.2.2.3. If any elements requiring the releasing agent are being determined, add 0.2 mL of 50 mg/mL La solution to each volumetric flask (see Table I, footnote e).

9.2.2.4. Dilute the sample to volume with 10% HNO_3.

9.2.3. Analyze the 10-mL solution directly for any element of very low concentration in the sample.

9.2.3.1. Dilute aliquots to an appropriate volume for the other elements of interest present at higher concentrations.

NOTE: Approximately 2 mL of solution are required for each element being analyzed.

9.2.3.2. The dilution factor will depend upon the concentration of elements in the sample and the number of elements being determined by this procedure.

9.3. Analysis of samples.

9.3.1. Set the instrument operating conditions as recommended by the manufacturer. The instrument should be set at the radiation intensity maximum for the wavelength listed in Table I for the element being determined.

9.3.2. Standard solutions should match the sample matrix as closely as possible and should be run in duplicate.

9.3.2.1. Aspirate working standard solutions, prepared fresh daily, into the flame and record the absorbance.

9.3.2.2. Prepare a calibration graph as described in Section 8.2.3.

Note: All combustion products from the AAS flame must be removed by direct exhaustion through the use of a good separate flame ventilation system.

9.3.3. Carry blank filters through the entire procedure each time samples are analyzed.

9.3.4. Aspirate the appropriately diluted samples directly into the instrument and record the absorbance for comparison with standards.

9.3.4.1. If the absorbance is above the calibration range, dilute an appropriate aliquot to 10 mL.

9.3.4.2. Aspirate water between samples.

9.3.4.3. Aspirate a midrange standard with sufficient frequency (that is, once every five samples) to ensure the accuracy of the sample determinations.

9.3.4.4. All determinations should be based on replicate analysis.

10. Calculations

10.1. Calculate the corrected volume collected by the filter by averaging the beginning and ending sample flow rates, converting to cubic meters, and multiplying by the sample collection time.

$$V = \frac{(F_B + F_E)t}{2000} ,$$

where V = sample volume (m^3),

F_B = sample flow rate at beginning of sample collection (Lpm),

F_E = sample flow rate at end of sample collection (Lpm), and

t = sample collection time (min).

10.2. After any necessary correction for the blank has been made, calculate metal concentrations by multiplying the micrograms of metal per mL in the sample aliquot by the aliquot volume and dividing by the fraction that the aliquot represents of the total sample and the volume of air collected by the filter.

$$\mu g \text{ metal}/m^3 = \frac{(C \times V_A) - B}{V \times F} ,$$

where C = concentration (μg metal/mL) in the aliquot,

V_A = volume of aliquot (mL),

B = total μg of metal in the blank,

F = fraction of total sample in the aliquot used for measurement, and

V = volume of air sampled (m^3).

11. Source Materials

11.1. W. Slavin, *Atomic Absorption Spectroscopy* (Interscience Publishers, New York, 1968).

11.2. J. Ramirez-Muzon, *Atomic Absorption Spectroscopy* (Elsevier Publishing Company, New York, 1968).

11.3. *Flame Emission and Atomic Spectrometry: Volume 1, Theory*, J. A. Dean and T. C. Rains, Eds. (Marcel Dekker, Inc., New York, 1969).

11.4. *Spectrochemical Methods of Analysis*, J. D. Winefordner, Ed. (John Wiley & Sons, Inc., New York, 1971).

11.5. C. B. Belcher, R. M. Dagnall, and T. S. West, "An Examination of the Atomic Absorption Spectroscopy of Silver," *Talanta* **11**, 1257 (1964).

11.6. C. E. Mulford, "Gallium and Indium Determinations by Atomic Absorption," *At. Absorp. Newsl.* **5**, 28 (1966).

11.7. J. W. Robinson, *Atomic Absorption Spectroscopy* (Marcel Dekker, Inc., New York, 1966).

11.8. *Analytical Data for Elements Determined by Atomic Absorption Spectroscopy* (Varian Techtron, Walnut Creek, California, 1971).

11.9. *Detection Limits for Model AA-5 Atomic Absorption Spectrophotometer* (Varian Techtron, Walnut Creek, California, 1971).

11.10. "Collaborative Testing of NIOSH Atomic Absorption Method, Final Report," NIOSH Publication No. 79-144 (NIOSH, Cincinnati, Ohio, August 1979).

AROMATIC NITRO-COMPOUNDS - A CHEMICAL SPOT TEST

Analyte: Aromatic Nitro-Compounds	**Method No.:** IH250
Matrix: Metal, painted, or concrete surfaces	**Detection Limit:** 30 ng/cm^2 on metal surfaces; 150 ng/cm^2 on painted surfaces; 5 µg/cm^2 on concrete surfaces
Procedure: Surface swipes followed by chemical spot test	**Precision:** Not applicable
Effective Date: 01/12/76 to 09/10/92	**Author:** Robert W. Weeks, Jr.

1. Principle of Method

1.1. A methanol-moistened piece of filter paper upon which zinc powder has been dusted is swiped across the surface suspected of being contaminated with 4-nitrobiphenyl.

1.2. If a nitro compound is present, it will be reduced to an amino compound upon addition of hydrochloric acid.

1.3. The resultant amino compound is treated with an acidified ethanolic solution of p-dimethylaminobenzaldehyde. Any amino compounds present transform to a yellow/orange color.

2. Accuracy and Precision

2.1. As the method is designed to be qualitative, the terms precision and accuracy are not applicable.

3. Interferences

3.1. Other aromatic nitro compounds, primary amines, and some isocyanates, indoles, hydrazines, hydrogen peroxide, tryptophan, and pyrroles that are present may cause interferences by forming "false positives."

3.2. "False positives" may also result from the transferring of amino acids from the hands to the filter paper. Therefore, **it is important to handle the filter paper only with polyethylene-gloved hands** in order to avoid this possible source of contamination.

4. Advantages and Disadvantages

4.1. The principal advantages of the method are its simplicity in use and interpretation and its ability to detect aromatic nitro compounds.

4.2. The principal disadvantage is that it will detect primary amines and nitro compounds in general and not merely those listed as analytes above.

5. Apparatus

5.1. Bags: polyethylene, 12.5- by 17.5-cm or equivalent, with ties or Zip-Lock capability for collecting samples.

5.2. Filter paper: 7- and 10-cm-diam (Whatman 42, Whatman, Inc., Clifton, New Jersey, or equivalent).

5.3. Pasteur pipettes and bulbs.

5.4. Reagent bottles: 4-oz polyethylene with nozzles and screw-on caps.

5.5. Safety goggles: contrast control to filter UV radiation.

5.6. Safety gloves: polyethylene, disposable (rubber gloves may cause interferences).

5.7. Spatula: metal, approximately 15-20 cm in length.

6. Reagents

6.1. p-Dimethylaminobenzaldehyde.

6.2. Ethanol.

6.3. Hydrochloric acid. Slowly add 0.7 mL of concentrated hydrochloric acid to 99 mL of distilled water.

6.4. Methanol.

6.5. Chromogenic visualization reagent.

6.5.1. Slowly add 2 mL of concentrated hydrochloric acid to 98 mL of ethanol.

6.5.2. To the ethanolic hydrochloric acid solution of Step 6.5.1., add 0.2 g of p-dimethylaminobenzaldehyde.

7. Procedure

NOTE: Wear polyethylene gloves and safety goggles.

7.1. Detection of aromatic nitro-compounds on painted or metal surfaces.

7.1.1. Impregnate filter paper with zinc by dusting approximately 0.1 g of zinc powder onto one side of the filter paper and "brushing" it into the paper with a spatula.

7.1.2. Place five drops of methanol upon the zinc-impregnated filter paper.

7.1.3. Immediately rub the filter over approximately 500 cm^2 of surface being monitored, being certain to keep the zinc-impregnated side up. **Apply pressure sufficient to ensure intimate contact, but do not tear.**

7.1.4. Place two drops of 0.1 N HCl upon the zinc-impregnated side of the paper and after one minute streak visualization reagent across the side of the filter paper opposite the impregnated side. **Be careful to not touch bottle spout to paper.**

7.1.5. After a 2-min reaction period, examine the side of the paper opposite the impregnation for yellow color.

7.1.6. If the test is positive, collect samples and submit them to an analytical laboratory for confirmation.

7.2. Detection of aromatic nitro-compounds on concrete surfaces.

7.2.1. Impregnate the paper by dusting approximately 0.1 g of zinc powder upon one side of a 7-cm filter paper. "Brush" into paper with a spatula.

7.2.2. Add three drops of methanol to the above filter paper.

7.2.3. Immediately rub the filter over approximately 500 cm^2 of surface being monitored. Be certain to keep the zinc side of the paper next to the surface being monitored. **Apply sufficient pressure to ensure intimate contact, but do not tear.**

7.2.4. Place two drops of 0.1 N HCl upon the impregnated side of the paper and allow to dry.

7.2.5. Apply visualization reagent as in Step 7.1.4. and examine for yellow color.

7.2.6. If a yellow color is observed, aromatic nitro-compounds may be present. Collect a sample and submit it to an analytical laboratory for confirmation.

8. Source Materials

8.1. J. V. Crable and R. G. Smith, "Classification of Analytical Methods," *Am. Ind. Hyg. Assoc. J.* **36**, 149 (1975).

8.2. F. Feigl (translated by R. E. Oesper), *Spot Tests in Organic Analysis* (Elsevier Publishing Co., New York, 1966), p. 243.

8.3. W. Troll and E. Rinde, "Metabolism of Benzidine and Benzidine Azo Dyes," presented at National Cancer Institute Carcinogenesis Program, Third Annual Collaborative Conference, Orlando, Florida (February 2-5, 1975).

8.4. K. Imai, P. Bohlen, S. Stein, and S. Udenfriend, "Detection of Fluorescamine-Labeled Amino Acids, Peptides, and Other Primary Amines on Thin-Layer Chromatography," *Arch. of Biochem. Biophys.* **161**, 161-163 (1974).

8.5. R. W. Weeks, Jr., B. J. Dean, and S. K. Yasuda, "Detection Limits of Chemical Spot Tests Toward Certain Carcinogens on Metal, Painted, and Concrete Surfaces," *Anal. Chem.* **48**, 2227-2233 (1976).

ORGANIC SOLVENTS IN AIR - GENERAL PROCEDURE

Analyte: Organic Solvents	**Method No.:** IH260
Matrix: Air	**Detection Limit:** See Tables I and III
Procedure: Adsorption on charcoal; desorption with a suitable solvent; gas chromatographic analysis	**Accuracy and Precision (representative values):** Accuracy ±10% Precision 8% RSD
Effective Date: 12/15/84	**Author:** Carol Sutcliffe Stuart D. Nielsen

1. Principle of Method

1.1. Either a known volume of air is drawn through a charcoal tube to trap the organic vapors present or an organic vapor monitor containing a charcoal pad is exposed to the air for a known length of time.

1.2. The charcoal in the tube or the charcoal pad is transferred to a small vial and desorbed with a suitable solvent, usually carbon disulfide. On some organic vapor monitors the solvent is added directly to the pad and direct desorption is done.

1.3. An aliquot of the desorbed sample is injected into a gas chromatograph.

1.4. The area of the resulting peak is determined and compared with areas obtained from the injection of the standards.

2. Minimum Detectable Limit

2.1. The lower limit of detection varies with the type of gas chromatographic detector used and the particular organic analyte. See Tables I and III for approximate minimum detectable amounts.

3. Accuracy and Precision

3.1. Quality control sampling is used as a measurement of the standard precision and accuracy. National Bureau of Standards Standard Reference Materials are also used. Representative values observed are ±10% accuracy with 8% relative standard deviation.

4. Interferences

4.1. High humidity may interfere with the absorption of the organic vapor onto the charcoal.

TABLE I. PARAMETERS ASSOCIATED WITH THE ANALYTICAL METHOD

Analyte	Packing Type[a]	Minimum Detection[b] (µg/sample)	Column Temperature (°C)[c]	Injector Temperature (°C)	Detector Temperature (°C)
Acetone	4	5.0	150	250	250
Benzene	1 (7)	1.0	175 (90)	230	250
Benzene in kerosene	9 (12)	---	100 (150)	230	250
Butyl acetate	11 (14)	10.0	70 (90)	200	220
Carbon tetrachloride	3 (13)	200.0	130 (190)	220	250
Chloroform	2 (13)	30.0	140 (190)	230	230
Cresols	6 (4)	5.0	100 (230)	250	250
Dioctyl phthalate	10	5.0	220	250	250
Dioxane	3 (15)	50.0	100 (100)	220	250
Dodecane	12 (5)	10.0	210 (200)	250	250
Ethanol	3 (12)	1.0	100 (100)	200	200
Ethyl acetate	7 (3)	5.0	70 (70)	200	200
Ethylene glycol	3	5.0	70	200	200
Ethylene dibromide	9 (14)	20.0	150 (90)	230	250
Ethylene dichloride	9 (14)	20.0	130 (90)	230	250
Freon TF	4 (5)	10.0	200 (100)	250	250
Heptane	2 (7)	1.0	75 (175)	200	200
Hexane	2 (7)	1.0	70 (150)	200	200
Isopropanol	3 (12)	1.0	180 (100)	250	250
Methanol	3 (5)	1.0	180 (85)	250	250
Methylene chloride	3 (5)	5.0	110 (85)	230	250
Methyl chloroform	3 (5)	5.0	110 (85)	200	200
Methyl ethyl ketone	7 (3)	10.0	75 (75)	200	200
Phenol	6 (12)	2.0	100 (220)	250	250
Pyridine	8	4.0	130	230	250
Tetrachloroethylene	3 (5)	10.0	110 (170)	230	250
Toluene	5 (7)	2.0	130 (75)	200	200
Trichloroethylene	3 (5)	5.0	100 (70)	200	200
Vinyl toluene	5 (7)	10.0	150 (100)	250	250
Xylenes	1 (7)	20.0	200 (90)	250	250

[a]Packing type and column size are listed in Table II. Alternate packings are given in parentheses.
[b]Minimum detection limits are based on flame ionization detection and assume a sample injection volume of 2 µL. Use electron capture detectors for greater sensitivity when analyzing for halogenated compounds like chloroform, carbon tetrachloride, and tetrachloroethylene.
[c]Temperatures in parentheses are used with the alternate packings.

TABLE II. PACKING TYPES AND COLUMN SIZE

Phases and Support	Column Size
(1) Porapak P	6′ × 1/8″ o.d. S.S.
(2) 20% by weight Carbowax 20M on Chromosorb G	6′ × 1/8″ o.d. S.S.
(3) 10% by weight SP1000 on Chromosorb G	6′ × 1/8″ o.d. S.S.
(4) 0.5% Halocarbon K352 on Chromosorb G	12′ × 1/8″ o.d. S.S.
(5) 25% by weight Apiezon L on Chromosorb W	6′ × 1/8″ o.d. S.S.
(6) 10% OV-101 on Supelcoport 80/100	4′ × 1/8″ o.d. Glass
(7) 10% by weight SP1000 on 60/80 mesh Chromosorb W	11′ × 1/8″ o.d. S.S.
(8) 10% by weight Carbowax 20M TPA	6′ × 1/8″ o.d. S.S.
(9) 10% SE30 on Chromosorb W, 60/80 mesh	15′ × 1/8″ o.d. S.S.
(10) 15% OV-17 on Chromosorb G	1′ × 1/8″ o.d. S.S.
(11) 20% diethylene glycol succinate on anakrom ABS	6′ × 1/8″ o.d. S.S.
(12) Tenax-GC, 60/80 mesh	5′ × 1/8″ o.d. S.S.
(13) 20% OV-101, 0.1% Carbowax 1500, 80/100 mesh	20′ × 1/8″ o.d. S.S.
(14) 20% by weight FFAP on 80/90 mesh	6′ × 1/8″ o.d. S.S.
(15) 5% OV-101 on 80/100 mesh AW DMCS Chromosorb G	6′ × 1/8″ o.d. S.S.

TABLE III. PARAMETERS OF ANALYTICAL METHODS USING CAPILLARY COLUMNS

Analyte (RT)[a]	Column	MQL (µg/sample)[b]	Column Temperature (°C)	Injector Temperature (°C)	FID Temperature (°C)	Internal Standard (RT)[a]
Acetone (5.9)	60 m × .32 mm DB-1	5	30° for 8 min to 125° @ 4°/min	220	220	Chloroform (8.6)
Benzene						
Carbontetra-chloride (8.4)	30 m × .25 mm DB-5	375	25° for 5 min to 100° @ 5°/min	250	300	Chloroform (6.5)
Chloroform (6.5)	30 m × .25 mm DB-5	245	25° for 5 min to 100° @ 5°/min	250	300	Trichloroethylene (10.1)
1,2 Dichloroethane (7.8)	30 m × .25 mm DB-5	385	25° for 5 min to 100° @ 5°/min	250	300	Chloroform (6.5)
p-Dioxane (7.2)	30 m × .25 mm DB-5	60	50° for 5 min to 120° @ 10°/min	250	300	Toluene (9.1)
Ethanol (5.3)	60 m × .32 mm DB-1	110	30° for 8 min to 125° @ 4°/min	220	220	Chloroform (8.6)
Freon 113 (1.6) (1,1,2 trichloro-1,2,2,-trifluoroethane)	30 m × .25 mm DB-wax	80	30° to 130° @ 2°/min	220	220	Chloroform (6.3)
Methylene Chloride (11.7)	60 m × .32 mm DB-1	210	30° for 8 min to 125° @ 4°/min	220	220	Chloroform (8.6)
1,1,2,2-tetrabromo-ethane (11.2)	30 m × .25 mm DB-5	2940	50° to 250° @ 15°/min	250	300	1,1,2,2,-tetrachloro-ethane (6.4)
Toluene (9.1)	30 m × .25 mm DB-5		50° for 5 min to 120° @ 10°/min	250	300	Ethylbenzene
Trichloroethylene (10.1)	30 m × .25 mm DB-5	530	25° for 5 min to 100° @ 5°/min	250	300	Chloroform (6.5)
Trimethylbenzene (14.2)	30 m × .25 mm DB-5	15	40° to 180° @ 10°/min	250	300	Toluene (8.8)
m-Xylene (13.7)	30 m × .25 mm DB-5	100	50° for 1 min to 200° @ 5°/min	250	300	Toluene (9.8)
o-Xylene (14.0)	30 m × .25 mm DB-5	95	50° for 1 min to 200° @ 5°/min	250	300	Toluene (9.8)
p-Xylene (13.7)	30 m × .25 mm DB-5	100	50° for 1 min to 200° @ 5°/min	250	300	Toluene (9.8)

[a]Retention times (min) given in parentheses. The retention times may change with different columns and operating conditions.
[b]Approximate minimum quantifiable limit.

4.2. If two or more solvents are known or suspected of being present in the sample, it will be necessary to select appropriate gas chromatographic operating conditions for their separation.

4.3. Any compound that has the same retention time as the specific analyte at the operating conditions used is an interference. Retention time data alone cannot be considered proof of chemical identity.

5. Collection and Storage of Samples

5.1. Samples are collected following standard procedures.

5.2. Refrigerate samples immediately upon receipt in order to minimize analyte degradation or reaction.

5.3. Samples should not be stored longer than 2 months.

6. Apparatus

6.1. Gas chromatograph: equipped with a flame ionization detector or an electron capture detector.

6.2 Automatic liquid sampler (ALS).

6.3. Column: capable of performing the required separations. A 30-m by 0.25-mm bonded 5% phenyl-methyl silicone fused-silica capillary column is a good general column.

6.4. Strip chart recorder.

6.5. Electronic or mechanical integrator: to determine relative peak areas.

6.6. Capped glass vials: 4-mL.

6.7. Automatic liquid sampler vials: 1.5-mL with Teflon-lined caps.

6.8. Microsyringes: 10-µL and other sizes suitable for making standard solutions.

6.9. Mini-Injector: 0.01-µL. Supelco, Bellefonte, Pennsylvania.

6.10. Volumetric flasks: 10- and 200-mL.

6.11. Glass pipette: 1-mL.

7. Reagents

7.1. Gases. For operation of the gas chromatograph with the detector of choice.

7.2. Carbon disulfide (spectro-quality) or other suitable desorption solvent.

7.3. Specific solvents (chromato-quality grade) for which the determinations are to be made.

7.4. Suitable internal standard.

8. Calibration and Standards

8.1. Check the purity of all chemicals by injecting 0.01 μL in the gas chromatograph at appropriate conditions. Obtain percent purities of the chemicals from the chromatogram.

8.2. Internal standard solution.

8.2.1. Choose an internal standard having chemical properties and boiling points similar to the analytes.

8.2.2. Add the internal standard to a volume of desorption solvent sufficient to carry out the entire determination and use this for preparing the standards and for elution of the unknowns.

8.2.3. Concentration of the internal standard should be within the ranges of the analytes of interest. Concentration is determined by the following equation:

$$C_{IS} = \frac{V_{IS}}{V_T} \times d_{IS} \quad ,$$

where C_{IS} = concentration of internal standard (mg/mL),

V_{IS} = volume of internal standard added (mL),

V_T = total volume of internal standard solution (mL), and

d_{IS} = density of internal standard (mg/mL).

8.2.4. Fill a 200-mL volumetric flask three-quarters full with desorption solvent. Add the calculated amount of internal standard under the surface of the carbon disulfide with a syringe. Bring to total volume with desorption solvent. Keep stoppered, wrapped with parafilm, and in the refrigerator when not in use.

8.3. Standards.

8.3.1. Calibration range for charcoal tubes.

8.3.1.1. Run a calibration curve in the range of 0.1 to 2 times the threshold limit value (TLV) of the analyte of interest. If a TLV is not available, assume a range of 1-10 mg/tube.

8.3.1.2. Assume a sampling volume of 10 L.

8.3.1.3. An example of how to determine the calibration range is shown below.

- Obtain the TLV for the compound of interest. TLV of benzene $= 30\ mg/m^3 = 30\ \mu g/L$.
- Assume a 10 L sampling volume. $30\ \mu g/L \times 10\ L = 300\ \mu g$.
- One TLV is equivalent to 300 μg. Because the range should be 0.1-2.0 TLV, the amount of benzene spiked onto the charcoal tube would be 30-600 μg.
- With a 1 mL addition of desorption solvent, the calibration curve would range from 30 to 600 μg/mL.

8.3.2. Calibration range for an organic vapor monitor (OVM).

8.3.2.1. Occasionally, compounds will be sampled by diffusion onto an organic vapor monitor (OVM) obtained from 3M. These monitors are not suitable for all organics, and the calculations to obtain calibration ranges are different. Information on suitable solvents and calculations are obtained from Source Material 11.3.

8.3.2.2. Look up the analyte of interest in the Analysis Guide section of the above reference.

8.3.2.3. Obtain the Sampling Rate (K_O).

8.3.2.4. Look up the TLV of the analyte.

8.3.2.5. Use the following equation to determine the weight of analyte on the monitor at the TLV.

$$W = (K_o)(C)(t)(10^6\ m^3/mL)\ ,$$

where W = amount of analyte (mg),

K_o = sampling rate of monitor (mL/min),

C = TLV concentration (mg/m^3), and

t = sampling time (min); 480 min for 8-h sample.

8.3.2.6. The calibration range is 0.1-2.0 times the TLV assuming the addition of 1 mL of desorption solvent.

8.3.2.7. Make sure the calibration range does not exceed the capacity of the analyte on the monitor as listed in Source Material 11.3.

8.3.3. Stock Solution.

8.3.3.1. Prepare a solution approximately 100 times the low end of the range of the analytes of interest.

8.3.3.2. Weigh the analyte by adding dropwise to a 10-mL volumetric flask partly filled with internal standard solution. After recording the weight(s) of the analyte(s), fill the volumetric flask to volume with internal standard.

8.3.4. Prepare four to six standards.

8.3.4.1. Place approximately 1 mL of internal standard in a 2-mL volumetric flask. With a syringe transfer the proper amount of stock solution below the surface of the internal standard. Fill to volume with internal standard. Shake and transfer to two ALS vials.

8.3.4.2. Volume of stock solution transfer is determined from the following equation:

$$C_{STD} = \frac{V_S}{V_T} \times C_{STK} \quad ,$$

where C_{STD} = concentration of standard (mg/mL),

V_S = amount of stock solution injected (mL),

V_T = total volume of standard (mL), and

C_{STK} = concentration of stock solution (mg/mL).

8.3.4.3. To minimize errors caused by transfer of very small quantities of materials by microliter syringe, first prepare the standard of highest concentration and then prepare the lower concentrations by subsequent dilutions.

9. Procedure

9.1. Sample preparation.

9.1.1. Charcoal tubes.

9.1.1.1. Score each charcoal tube with a file in front of the first section of charcoal and break open.

9.1.1.2. Remove and discard the wire retainer and the glass wool.

9.1.1.3. Transfer the charcoal in this section to a vial and cap the vial.

9.1.1.4. Remove the separating section of foam and place in a second vial.

9.1.1.5. Transfer the charcoal in the second section and final foam section to the second vial and then cap the vial.

9.1.1.6. Take care in each step of the operation so that no charcoal is lost. Rubber gloves can cause static electricity, so it is recommended that they be removed during this part of the operation.

9.1.1.7. Add 1.0 mL of internal standard solution to each vial using a 1.0-mL glass pipette and recap the vials.

9.1.1.8. Allow the vials and their contents to shake for at least 30 min to assure complete desorption.

9.1.2. Organic vapor monitors.

9.1.2.1. Make sure that the white film has been removed from the monitor and that the closure cap is snapped on tightly.

9.1.2.2. Add 1 mL of internal standard to the OVM through the center port. The pouring port should also be open.

9.1.2.3. Seal both ports. Let the monitor stand with occasional shaking for at least 30 min.

9.1.2.4. Transfer the contents of the OVM to an ALS vial.

9.2. Gas chromatograph conditions.

9.2.1. Set the operating conditions on the gas chromatograph and allow equilibrium to be attained. Operating conditions will vary with the analyte and the column used. Typical operating conditions are:

- Injector temperature, 25-50°C above the boiling point of the analyte, to give flash evaporation.
- Column oven temperature, 10-30°C below the boiling point of the analyte.
- Detector temperature, at or above the injection temperature, usually 250-300°C. A high detector temperature is used to eliminate condensation of materials within the detector.
- Carrier gas flow, 30-40 mL/min for packed columns and 1-2 mL/min for capillary columns.
- For other operating conditions, see the manufacturer's instruction manual for the specific gas chromatograph and/or detector being used.

9.2.2. Recommended representative conditions are given in Table I for a variety of typical analytes.

9.3. Sample injection.

9.3.1. Inject 2.0 μL of sample into the gas chromatograph either manually or by using an automatic liquid sampler.

9.3.2. This injection is one of the more critical steps in the determination because the quality of the results relates directly to the variation in the injection volume from sample to sample, even though an internal standard is used.

9.3.3. Make three to five injections for each sample. The resulting peak heights on the recorder and/or areas on the integrator should be reasonably consistent. Large discrepancies indicate an injection problem.

9.4. Determination of desorption efficiency.

9.4.1. Charcoal tubes.

9.4.1.1. The desorption efficiency of a particular compound can vary from one batch of charcoal to another.

9.4.1.2. To determine desorption efficiency, use two to five charcoal tubes from the same batch used to obtain the samples. The tubes are opened as described in Step 9.1.1.1.

9.4.1.3. Using a microliter syringe, add a known amount of the analyte, within the range of the calibration curve, to each of the tubes and reseal.

9.4.1.3.1. Make up a stock desorption solution in carbon disulfide.

9.4.1.3.2. Spike 5 to 10 μL into the center of the front section of the tube being careful not to get the spike on the glass wool, glass walls, or separating foam.

9.4.1.3.3. Spike the same amount into 2 mL of internal standard in a vial. This solution is used as a check in determining the desorption efficiency.

9.4.1.4. Cap and seal with parafilm and allow the tubes to stand at least overnight to assure complete adsorption and equilibration of the analyte.

9.4.2. Organic vapor monitors.

9.4.2.1. Remove the plastic ring and white film from the monitor.

9.4.2.2. Place a 2.5-mm-diam Whatman No. 5 filter paper on the spacer plate.

9.4.2.3. Snap the closure cap on the monitor.

9.4.2.4. Calculate the amount of material to be injected. The following equation will calculate the injection amount, in mg, that corresponds to the amount that would be collected by a monitor at sampling conditions chosen. By varying the chosen concentration levels and exposure times, a recovery coefficient curve can be generated.

$$W = (K_o)(C)(t)(10^{-6}\ m^3/mL),$$

where W = amount of liquid injected (mg),

K_o = sampling rate of monitor (mL/min),

C = average concentration (mg/m^3), and

t = sampling time (min).

For compounds that are solid at room temperature, prepare a solution in carbon disulfide so that no more than a 5-µL injection is needed to spike the required number of mg of the compound. A suggested starting point would be to assume an average concentration of one TLV and an 8-h exposure period, as long as the amount in mg does not exceed the recommended exposure limit of the monitor.

9.4.2.5. Inject the known quantity of the organic material onto the filter paper through the center port.

9.4.2.6. Let the monitor sit 16-24 h to allow total transfer of the organic material from the filter paper to the sorbent before elution.

9.4.2.7. Remove the filter paper from the monitor.

9.4.3. Desorb and analyze the tubes or monitors as described in Steps 9.1. through 9.3.

9.4.4. The desorption efficiency is the concentration on the tubes or monitor found from the calibration curve divided by the actual concentration spiked on the tube.

10. Calculations

10.1. The analyte peak areas or peak heights are normalized relative to the internal standard peak area or peak height to correct for variation in the amount of sample injected.

$$PA_R = \frac{PA_o}{IS_o},$$

where PA_R = corrected peak areas or peak height of analyte,

PA_o = observed peak area or peak height of analyte, and

IS_o = observed peak area or peak height of internal standard.

10.2. Average the analyte peak area ratios or peak height ratios for each sample.

10.3. Prepare a standard curve using linear graph paper with the average analyte peak area ratios or peak height ratios on the y-axis and their known concentrations on the x-axis. Prepare a least-squares fit of the data. The standard curve should be a straight line passing through the origin, but it may curve downward at very high concentrations.

10.4. For the unknowns, determine from the standard curve the weight corresponding to each average corrected analyte peak area or peak height.

10.5. Correct each sample for the blank.

$$C_c = C_s - C_b \quad ,$$

where C_c = corrected concentration (mg/mL) of sample,

C_s = concentration of the sample, and

C_b = concentration of the blank.

10.6. Determine the weight of the analyte on the tube or monitor by multiplying the corrected concentration by the amount of desorption solvent (mL).

10.7. Add the corrected amounts present in the front and backup sections of the same sample tube to determine the total measured amount in the sample. A large amount found in the backup section indicates that breakthrough may have occurred because of overloading, humidity, or other reasons, and the observed results may be low. Report this along with the results.

10.8. Divide the total weight by the desorption efficiency to obtain the corrected weight for the sample.

10.9. If all the data are available, calculate the analyte concentrations in the environment in either mg/m^3 or ppm (corrected to standard conditions).

10.9.1. Charcoal tubes.

10.9.1.1. Calculate the analyte concentration in mg/m^3.

$$C = \frac{W \times K}{V} \quad ,$$

where C = analyte concentration (mg/m^3),

W = sample weight (mg),

K = 1000 (L/m^3), and

V = volume of air sampled (L).

10.9.1.2. Calculate the analyte concentration in ppm.

$$ppm = C \times \frac{24.45}{MW} \times \frac{760}{P} \times \frac{(T + 273)}{298} ,$$

where ppm = analyte concentration (ppm),

C = analyte concentration (mg/m^3),

24.45 = molar volume (L/mole at 25°C and 760 mm Hg),

MW = molecular weight of analyte,

760 = standard pressure (mm Hg),

P = pressure of air sampled (mm Hg),

T = temperature of air sampled (°C),

273 = conversion factor between °C and K, and

298 = standard temperature (K).

10.9.2. Organic vapor monitors.

10.9.2.1. The time-weighted-average concentration in mg/m of the analyte in the environment sampled can be calculated from the following equation:

$$C = \frac{W}{rt} \times A ,$$

where C = analyte concentration (mg/m^3),

W = sample weight (mg),

r = recovery coefficient as determined in Section 9.4.2. or obtained from Source Material 11.3.,

t = length of sampling period (min), and

A = calculation constant obtained from Source Material 11.3.

10.9.2.2. The time-weighted-average concentration in parts per million (ppm) of the analyte can be calculated from the following equation:

$$ppm = \frac{W}{rt} \times B \quad ,$$

where W = sample weight (mg),

r = recovery coefficient as determined in Section 9.4.2. or obtained from Source Material 11.3.,

t = length of sampling period (min), and

B = calculation constant obtained from Source Material 11.3.

11. Source Materials

11.1. D. G. Taylor, Manual Coordinator, *NIOSH Manual of Analytical Methods* (National Institute for Occupational Safety and Health, Cincinnati, Ohio, 1977).

11.2. American Conference of Governmental Industrial Hygienists, *Threshold Limit Values for Chemical Substances in the Work Environment* (Publications Office, ACGIH, Cincinnati, Ohio, 1984-85).

11.3. Occupational Health and Safety Products Division/3M, *Organic Vapor Monitor #3500 Compound Guide* (3M Corporation, St. Paul, Minnesota, 1982).

ORGANIC SOLVENTS - NIOSH PAT SAMPLES

Analyte: Organic Solvents	**Method No.:** IH270
Matrix: Charcoal tube	**Detection Limit:** See Table I
Procedure: Desorption with carbon disulfide, gas chromatographic analysis	**Accuracy and Precision (Representative Values):** Accuracy: ±10% Precision: 8% RSD
Effective Date: 01/01/85	**Author:** Carol Sutcliffe

1. Principle of Method

1.1. The charcoal in the tube is transferred to a small vial and desorbed with a measured amount of carbon disulfide containing an internal standard.

1.2. An aliquot of the desorbed sample is injected into a gas chromatograph.

1.3. The area of the resulting peak is determined and compared with areas obtained from the injection of the standards.

2. Detection Limits and Range

2.1. The lower limit of detection varies with the particular organic analyte. See Table I for approximate minimum detectable amounts.

2.2. Organic solvents are analyzed over ranges determined by the National Institute for Occupational Safety and Health (NIOSH) Proficiency Analytical Testing (PAT) Program and are listed in Table II.

3. Accuracy and Precision

3.1. Quality control samples are used to measure the accuracy and precision. National Bureau of Standards Standard Reference Materials are also used. Representative values observed are ±10% accuracy with 8% relative standard deviation.

4. Interferences

4.1. When two or more solvents are present in the sample, it is necessary to select appropriate gas chromatographic operating conditions for their separation.

4.2. Any compound that has the same retention time as the specific analyte at the operating conditions used is an interference. Retention time data alone cannot be considered proof of chemical identity.

TABLE I. GAS CHROMATOGRAPHIC PARAMETERS FOR PAT SOLVENTS

Analyte	Minimum Detection (µg/sample)	B.P. (°C)	Column Program	Injector Temp. (°C)	Detector Temp. (°C)	Retention Time (min)	Internal Standard (R.T.)
Benzene		80.1	58° for 5 min to 120°	250°	300°		Ethylbenzene
Carbon Tetrachloride	375	76.5	25° for 5 min to 100°	250°	300°	8.4	Chloroform (6.5)
Chloroform	245	61.7	25° for 5 min to 100°	250°	300°	6.5	Trichloro-ethylene (10.1)
1,2-Dichloroethane	385	57.3	25° for 5 min to 100°	250°	300°	7.8	Chloroform (6.5)
Methylene Chloride		40					
Methyl Chloroform		74.1					
Methyl Ethyl Ketone		79.6					
Methyl Isobutyl Ketone		116.9					
p-Dioxane	60	101	50° for 5 min to 120°	250°	300°	7.2	Toluene (9.12)
Toluene		110.6	50° for 5 min to 120°	250°	300°		Ethylbenzene
Trichloroethylene	530	87.0	25° for 5 min to 100°	250°	300°	10.1	Chloroform (6.5)
o-Xylene	30	144.4	50° for 5 min to 120°	250°	300°	12.7	Toluene (9.12)

TABLE II. PAT TARGET CONCENTRATIONS

Target concentration levels in the PAT Program are designed to represent concentration levels that would be found at or near current or proposed Threshold Limit Values (TLV) or Personnel Exposure Limit (PEL) levels. Organic concentration levels are calculated to represent 1/10 to 2 times TLV levels for a 10-liter sample.

Contaminant	Target Range (mg)
Benzene	0.050– 0.500
Carbon Tetrachloride	0.300– 3.000
Chloroform	0.300– 3.000
1,2-Dichloroethane	0.500– 5.000
Methylene Chloride	0.800– 8.000
Methyl Chloroform	1.000–10.000
Methyl Ethyl Ketone	1.000–10.000
Methyl Isobutyl Ketone	1.000–10.000
p-Dioxane	0.300– 3.000
Toluene	0.500– 5.000
Trichloroethylene	1.000–10.000
o-Xylene	1.000–10.000

5. Storage of Samples

5.1. Refrigerate samples immediately upon receipt in order to minimize analyte degradation or reaction.

5.2. Samples should not be stored longer than 2 months.

6. Apparatus

6.1. Gas chromatograph: Hewlett-Packard Model 5880A equipped with a flame ionization detector and an automatic liquid sampler.

6.2. Fused-silica capillary column: 30-m by 0.25-mm, DB-5.

6.3. Strip chart recorder.

6.4. Electronic or mechanical integrator: to determine relative peak areas.

6.5. Capped glass vials: 4-mL.

6.6. Microsyringes: 10-μL and other sizes suitable for making standard solutions.

6.7. Volumetric flasks: 10-mL.

6.8. Automatic liquid sampler (ALS) vials: 1-mL, with crimp-sealed Teflon-lined caps.

6.9. Glass pipette: 2-mL.

6.10. Parafilm.

6.11. Tweezers.

6.12. Dissecting probe.

7. Reagents

7.1. Gases. For operation of the gas chromatograph with the flame ionization detector.

7.2. Carbon disulfide (spectro-quality).

7.3. Specific solvents (chromato-quality grade) for which the determinations are to be made.

7.4. Suitable internal standard.

8. Calibration and Standards

8.1. Check the purity of all chemicals by injecting 0.01 μL (when checking carbon disulfide use 1.0 μL) in the gas chromatograph at appropriate conditions. See Table I. Obtain percent purities of the chemicals from the chromatogram.

8.2. Internal standard solution.

8.2.1. Choose an internal standard with chemical properties and boiling points similar to those of the analytes. See Table I.

8.2.2. Add the internal standard to a volume of carbon disulfide sufficient to carry out the entire determination. Use this solution for preparing the standards and for elution of the unknowns.

8.2.3. Concentration of the internal standard should be within the ranges of the analytes of interest. Concentration is determined by the following equation:

$$C_{IS} = \frac{V_{IS}}{V_T} \times d_{IS} \quad ,$$

where V_{IS} = volume of internal standard added (mL),

V_T = total volume of internal standard solution (mL),

d_{IS} = density of internal standard (mg/mL), and

C_{IS} = concentration of internal standard (mg/mL).

8.2.4. Fill a 200-mL volumetric flask three-quarters full with carbon disulfide. Add the calculated amount of internal standard below the surface of the carbon disulfide with a syringe. Bring to total volume with carbon disulfide. Keep stoppered, wrapped with parafilm, and in the refrigerator when not in use.

8.3. Stock solution.

8.3.1. Prepare a solution approximately 100 times the lower end of the range of the analytes of interest. See Table II.

8.3.2. Weigh the analyte by adding it dropwise to a 10-mL volumetric flask partly filled with internal standard solution. After recording the weight(s) of the analyte(s), fill the volumetric flask to volume with internal standard solution.

8.4. Standards

8.4.1. Prepare six standards: two below the low end of the range, two at the low range, one at mid range, and one at the high end of the range.

8.4.2. Place approximately 1 mL internal standard solution in a 2-mL volumetric flask. Inject a calculated amount of stock solution below the surface of the internal standard. Using a microliter syringe, fill the flask to volume with internal standard. Shake and transfer the solution to two ALS vials.

8.4.3. Determine the volume of stock solution to inject from the following equation:

$$C_{STD} = C_{STK} \times \frac{V_S}{V_T} \quad ,$$

where V_S = amount of stock solution injected in mL,

V_T = total volume of standard in mL,

C_{STK} = concentration of stock solution in mg/mL, and

C_{STD} = concentration of standard in mg/mL.

8.4.4. To minimize errors caused by transfer of very small quantities of materials by microliter syringe, first prepare the standard of highest concentration and then prepare the lower concentrations by subsequent dilutions.

8.5. Use these standards, plus a solvent blank, to prepare the standard curve.

8.6. Because of the high volatility of carbon disulfide, the standards must be stored in a freezer and are not stable for more than two days.

9. Procedure

9.1. Sample preparation.

9.1.1. Removal of charcoal from tubes.

9.1.1.1. Score each charcoal tube with a file in front of the first section of charcoal and break open.

9.1.1.2. Remove with tweezers the wire retainer and the glass wool and discard.

9.1.1.3. Transfer the charcoal in this section to a vial.

9.1.1.4. Remove the separating foam section and add to the vial. Transfer the charcoal in the second section to the vial, using a dissecting probe, and cap the vial.

9.1.1.5. Take care in each step of the operation so that no charcoal is lost. Rubber gloves can cause static electricity, so it may be best not to wear them during this part of the operation.

9.1.2. Add 2.0 mL of internal standard to each vial, using a 2.0-mL glass pipette, and recap the vials.

9.1.3. Shake the vials and their contents for at least 30 min to assure complete desorption.

9.2. Gas chromatograph conditions.

9.2.1. Set the operating conditions on the gas chromatograph and allow equilibrium to be attained. Operating conditions will vary with the analyte and the column used. Typical operating conditions are:

- Injector temperature, 250°C, to give flash evaporation.
- Column oven temperature, 10-30°C below the boiling point of the analyte.
- Detector temperature, at or above the injection temperature, usually 250-300°C. A high detector temperature is used to eliminate condensation of materials within the detector.
- Carrier gas flow, 1-2 mL/min for capillary columns.
- See Attachment 1 for other typical HP 5880 operating conditions.

9.2.2. Recommended representative conditions are given in Table I for a variety of typical analytes.

9.3. Sample injection.

9.3.1. Inject 2.0 μL of sample into the gas chromatograph, using an automatic liquid sampler.

9.3.2. Make two to three injections for each sample. The resulting peak heights on the recorder and/or areas on the integrator should be reasonably consistent. Large discrepancies indicate an injection problem.

9.4. Determination of desorption efficiency.

9.4.1. The desorption efficiency of a particular compound can vary from one batch of charcoal to another.

9.4.2. To determine desorption efficiency, use two of the blank charcoal tubes sent with the PAT samples. The tubes are opened as described in Step 9.1.1.

9.4.3. Using a microliter syringe, add a known amount of the analyte to each of the tubes and reseal with a cap and parafilm.

9.4.3.1. Make up a stock desorption solution in **carbon disulfide**.

9.4.3.2. Spike 5 to 10 μL into the center of the front section of the tube being careful not to get the spike on the glass wool, glass walls, or separating foam.

9.4.3.3. Spike the same amount into 2 mL of internal standard in a vial. This solution is used as a check in determining the desorption efficiency.

9.4.4. Allow the tubes to stand at least 4 h to assure complete adsorption and equilibration of the analyte.

9.4.5. Desorb and analyze the tubes as described in Steps 9.1. through 9.3.

9.4.6. The desorption efficiency is the concentration on the tubes found from the calibration curve divided by the actual concentration spiked on the tube.

10. Calculations

10.1. The analyte peak areas or peak heights are normalized relative to the internal standard peak area or peak height to correct for variation in the amount of sample injected.

$$PA_R = \frac{PA_O}{IS_O} ,$$

where PA_R = peak areas or peak height ratio of analyte,

PA_O = observed peak area or peak height of analyte, and

IS_O = observed peak area or peak height of internal standard.

10.2. Average the analyte peak area ratios or peak height ratios for each sample.

10.3. Prepare a standard curve using linear graph paper with the average analyte peak area ratio or peak height ratio on the y-axis and their known concentrations on the x-axis. Run a least-squares fit on the data. The standard curve should be a straight line passing through the origin, but it may curve downward at very high concentrations.

10.4. For the unknowns determine from the standard curve the concentration corresponding to each average analyte peak area ratio or peak height ratio.

10.5. Correct each sample for the blank.

$$C_C = C_S - C_B \quad ,$$

where C_C = corrected concentration of sample,

C_S = concentration of the sample, and

C_B = concentration of the blank.

10.6. Determine the weight of analyte on the tube by multiplying the corrected concentration by the volume of desorption solvent.

10.7. Divide the total weight by the desorption efficiency to obtain the corrected weight for the sample.

11. Source Materials

11.1. D. G. Taylor, Manual Coordinator, *NIOSH Manual of Analytical Methods* (National Institute for Occupational Safety and Health, Cincinnati, Ohio, 1977).

ATTACHMENT 1
TYPICAL HP 5880 OPERATING CONDITIONS

OVEN TEMP = 35°C SETPT = 35°C LIMIT = 405°C
EQUIB TIME = 1.00 MIN

OVEN TEMP PROFILE:
INITIAL VALUE = 35°C
INITIAL TIME = 8.00 MIN
POST VALUE = 150°C
POST TIME = 2.00 MIN

DET 1	TEMP = 220°C	SETPT = 220°C	LIMIT = 405°C
DET 2	TEMP = 63°C	SETPT = 123°C (OFF)	LIMIT = 405°C
INJ 1	TEMP = 52°C	SETPT = 250°C (OFF)	LIMIT = 405°C
INJ 2	TEMP = 220°C	SETPT = 220°C	LIMIT = 405°C
AUX 1	TEMP = 0°C	SETPT = 50°C (OFF)	LIMIT = 405°C
AUX 2	TEMP = 0°C	SETPT = 50°C (OFF)	LIMIT = 405°C

DEVICE 2: GC TERMINAL 1
SIGNAL = 8
PLOT = ???
CHART SPEED = 1.00 CM/MIN
ATTN = 2↑4
%OFFSET = 10
ZERO = 7.55

DEVICE 6: CARTRIDGE TAPE 1

DETECTOR 8: FLAME IONIZATION
CALIBRATION: M = 1428100 LI = 1359640 L2 = 1359970

DETECTOR C: NICKEL 63 ECD
CALIBRATION: M = 1622330 LI = 1556530 L2 = 1556530

VALVES:
VALVE 1 = OFF
VALVE 2 = OFF
VALVE 3 = OFF
VALVE 4 = OFF
VALVE 5 = OFF
VALVE 6 = OFF
VALVE 7 = OFF
VALVE 8 = OFF
VALVE 9 = OFF
VALVE 10 = OFF
VALVE 11 = OFF
VALVE 12 = OFF

THRESHOLD = 5
PEAK WIDTH = 0.04

AVAILABLE MEMORY (BYTES): 23104

PERCHLORATE IN WATERS — COLORIMETRIC

Analyte: Perchlorate	**Method No.:** IH273
Matrix: Water	**Detection Limit:** 0.2%
Procedure: Colorimetric	**Accuracy and Precision:** Qualitative
Effective Date: 08/18/92	**Author:** Daryl Knab

SAFETY NOTE: Before beginning this procedure, read all of the Material Safety Data Sheets for the chemicals listed in Sec. 6. Read Sec. 4.3 of the EM-9 Safety Manual for information on personal protective clothing and equipment. Read Sec. 10 of this procedure and Source Material 11.1 for proper waste disposal practices.

1. Principle of Method

1.1. Perchlorate precipitates with methylene blue to form an observable purple precipitate. The current method is only qualitative, but a quantitative colorimetric procedure could be developed from it. The precipitate will not coagulate below about 0.2% (2000 ppm). This level is adequate for detecting ClO_4^- when dismantling duct work.

2. Accuracy and Precision

2.1. The procedure is qualitative.

3. Interferences

3.1. Color and turbidity interfere with this method.

4. Collection and Storage of Samples

4.1. Collect and store non-acid samples in polyethylene bottles at 4°C. Filter all samples.

4.2. Complete analysis within 6 months.

5. Apparatus

5.1. Transfer pipette: 5-mL, disposable.

5.2. Pipette: 25- and 250-μL, Eppendorf.

5.3. Hot-water bath.

5.4. Test tubes: 50-mL, glass.

5.5. Filter syringe: 10-mL, 0.45-μ, and 25-mm.

6. Reagents

6.1. Methylene blue. Dissolve 100 mg of methylene blue in approximately 100 mL of water.

6.2. Perchlorate solution (2000 μg/L). Dilute 250 μL of perchloric acid (70%, 12 M) in approximately 100 mL of water.

7. Calibration and Standards

7.1. None currently used.

8. Procedure

8.1. Pipette 10 mL of water into a tube and 10 mL of the perchlorate solution into a second tube. With a filter syringe, add 10-mL aliquots of sample to two additional tubes. Add 25 μL of perchloric acid to one of the samples.

8.2. Add 2 drops of methylene blue solution to each tube, mix well, and let stand for approximately 20 min.

8.3. The presence of perchlorate is indicated by the blue methylene blue solution turning lavender. If a color change is observed, but no precipitate coagulates on stirring after 20 min, place the solutions in a hot-water bath for approximately 10 min. Let cool for approximately 20 min and check for a visible precipitate. If no precipitate is visible, the solution contains less than 2000 ppm perchlorate.

8.4. Visually compare the sample with the blank and the standard. Check to see that the spike sample formed a precipitate to determine if interferences are present.

9. Calculations

9.1. This is a qualitative determination which indicates whether perchlorate is present above the 0.2% level.

9.2. Prepare serial dilutions to estimate the concentration of a sample that actually contains perchlorates.

10. Proper Waste Disposal Practices

10.1. Discard all solutions in the acid waste system.

11. Source Materials

11.1. "Chemical, Hazardous, and Mixed Waste," Administrative Requirement 10-3, in *Environment, Safety, and Health Manual*, Los Alamos National Laboratory Manual, Chapter 1 (most recent edition).

PETROLEUM HYDROCARBONS, TOTAL RECOVERABLE IN SOIL

Analyte: Petroleum hydrocarbons	**Method No:** IH274
Matrix: Soil	**Detection Limit:** 0.6 μg/sample
Procedure: Extraction with fluorocarbon-113 and infrared spectrophotometry	**Accuracy and Precision:** Unknown
Effective Date: 06/03/91	**Author:** Stuart D. Nielsen

SAFETY NOTE: Before beginning this procedure, read all of the Material Safety Data Sheets for the chemicals listed in Sec. 7. Read Sec. 4.3 of the EM-9 Safety Manual for information on personal protective clothing and equipment.

1. Principle of Method

1.1. This method is a modification of EPA Method 418.1 (Storet No. 45501), which uses with a water matrix instead of a soil matrix.

1.2. Hydrocarbons are extracted from a known weight of soil with fluorocarbon-113 (1,1,2-trichloro-1,2,2-trifluoroethane) and the extract is analyzed by infrared spectrophotometry.

1.3. This method is applicable to the measurement of all types of aliphatic hydrocarbon mixtures, although loss of significant amounts of the more volatile hydrocarbons may occur during sample collection and manipulation.

2. Range and Detection Limit

2.1. With the sample diluted so that its absorbancy is within 0.1 and 1.0 absorbancy units, the method can detect from 0.6 μg of hydrocarbon in the sample to pure aliphatic hydrocarbon.

2.2. The lower limit of quantitation of this method was found to be 0.05 μg of hydrocarbon per milliliter of extract. This limit corresponds to 0.6 μg/sample using 12 mL of extractant.

3. Accuracy and Precision

3.1. Accuracy and precision data are not currently available.

4. Interferences

4.1. Any compound which contains an aliphatic carbon-hydrogen bond is an interference because this method measures the aliphatic carbon-hydrogen stretch band in the infrared spectrum of the analyte.

5. Advantages and Disadvantages

5.1. An advantage of the method is that it automatically measures the sum of all aliphatic hydrocarbons in the soil sample with one simple measurement.

5.2. A disadvantage of the method is that all compounds present containing aliphatic carbon-hydrogen bonds will be counted as aliphatic hydrocarbons.

6. Apparatus

6.1. Infrared spectrophotometer: preferably a computer-controlled Fourier transform spectrophotometer to more easily attain the required sensitivity.

6.2. Analytical balance: capable of weighing to at least 100 g with an accuracy of at least four decimal places.

6.3. Glass jars: 30-mL. As received from the manufacturer, many jars contain a residue containing aliphatic carbon-hydrogen bonds. Clean the jars before they are used in the analysis.

6.4. Glass syringe: 25-mL.

6.5. Spectrometer cells: 1-cm-path-length, quartz.

7. Reagents

7.1. Fluorocarbon-113 (1,1,2-trichloro-1,2,2-trifluoroethane, reagent-grade).

7.2. Aliphatic hydrocarbon mixture to use as a standard. A light mineral oil is the preferred standard, although gasoline, kerosene, or diesel fuel can be used.

8. Calibration and Standards

8.1. Although the standard curve is theoretically linear from zero absorbance to infinite absorbance, precision and accuracy for any infrared determination are highest when the absorbancies are kept between 0.1 and 1.0 absorbance units.

8.2. Calibration standards.

8.2.1. Stock standard. Weigh 2 - 5 mg of the standard hydrocarbon mixture into a tared glass jar. Add 12.0 mL of fluorocarbon-113 to the jar.

8.2.2. Working standards. Dilute portions of the stock standard to give at least three standards with concentrations between 40 and 400 μg/mL. This should give a standard curve between approximately 0.1 and 0.9 absorbance units.

9. Procedure

9.1. Weigh 10 - 11 g of the soil sample into a tared glass jar.

9.2. Add 12.0 mL of fluorocarbon-113 to the jar. Cap the jar and shake vigorously.

9.3. Sonicate the jar for 30 min.

9.4. Allow the soil to settle. Fill a clean infrared cell with the supernatant liquid.

9.5. Determine the absorbance for each sample and standard over the range from 2700 cm^{-1} through 3100 cm^{-1} using pure fluorocarbon-113 as a reference.

9.6. If the absorbance exceeds 0.9, prepare an appropriate dilution and redetermine the absorbance.

10. Calculations

10.1. Measure the peak absorbance at approximately 2930 cm^{-1}. Measure background absorbencies on both sides of the peak cluster at approximately 2800 cm^{-1} and 3010 cm^{-1}.

10.2. Calculate the background at 2930 cm^{-1} by interpolation between that measured on both sides.

10.3. Calculate the absorbance due to the sample by subtracting the calculated background at 2930 cm^{-1} from the peak absorbance.

10.4. Plot a standard curve from the data for the standards by plotting the absorbance value vs the concentration of the standard in μg/mL.

10.5. Determine the concentration of petroleum hydrocarbons in the extract by comparing the resulting absorbance against the standard curve.

10.6. Calculate the petroleum hydrocarbons in the sample using the following equation.

$$\mu g/g \text{ of soil} = \frac{(C \times V \times D)}{W} ,$$

where C = concentration determined from standard curve,
V = volume of extractant solvent used,
D = extract dilution factor, if necessary, and
W = weight of soil used (g).

11. Source Materials

11.1. "Petroleum Hydrocarbons, Total Recoverable," EPA Method 418.1 (Spectrophotometric, Infrared), Storet No. 45501 (1978).

PETROLEUM HYDROCARBONS, TOTAL RECOVERABLE IN WATER

Analyte: Petroleum hydrocarbons	**Method No.:** IH275
Matrix: Water	**Detection Limit:** 0.5 μg/sample
Procedure: Extraction with fluorocarbon-113, infrared spectrophotometry	**Accuracy and Precision:** Unknown
Effective Date: 09/03/91	**Author:** Stuart D. Nielsen

SAFETY NOTE: Before beginning this procedure, read all of the Material Safety Data Sheets for the chemicals listed in Sec. 7. Read Sec. 4.3 of the EM-9 Safety Manual for information on personal protective clothing and equipment.

1. Principle of Method

1.1. This method is equivalent to EPA Method 418.1 (Storet No. 45501).

1.2. This method measures the concentration of hydrocarbons in surface and saline waters, industrial and domestic wastes.

1.3. Hydrocarbons are extracted from a known volume of water with fluorocarbon-113 (1,1,2-trichloro-1,2,2-trifluoroethane) and the extract is analyzed by infrared spectrophotometry.

1.4. This method is applicable to measurement of all types of aliphatic hydrocarbon mixtures, although loss of significant amounts of the more volatile hydrocarbons may occur during sample collection and manipulation.

2. Range and Detection Limit

2.1. With the sample diluted so that its absorbancy is within 0.1 and 1.0 absorbance units, the theoretical range of the method is from 5.0 μg of hydrocarbon in the sample to pure aliphatic hydrocarbon.

2.2. The lower limit of quantitation of this method was found to be 0.05 μg of hydrocarbon per milliliter of extract. This limit corresponds to 0.5 μg of hydrocarbon in the extracted sample.

3. Accuracy and Precision

3.1. Accuracy and precision data are not currently available.

4. Interferences

4.1. Any compound which contains an aliphatic carbon-hydrogen bond is an interference because this method measures the aliphatic carbon-hydrogen stretch band in the infrared spectrum of the analyte.

5. Advantages and Disadvantages

5.1. An advantage of the method is that it automatically measures the sum of all aliphatic hydrocarbons in the sample with one measurement.

5.2. A disadvantage of the method is that all compounds present containing aliphatic carbon-hydrogen bonds will be counted as aliphatic hydrocarbons.

6. Apparatus

6.1. Infrared spectrophotometer: preferably a computer-controlled Fourier transform spectrophotometer to more easily attain the required sensitivity.

6.2. Separatory funnel: 200-mL, with Teflon stopcock.

6.3. Spectrometer cells: 1-, 5-, and 10-cm-path-length, quartz.

6.4. Volumetric flasks: 100-mL.

6.5. Filter funnels.

7. Reagents

7.1. Fluorocarbon-113 (1,1,2-trichloro-1,2,2-trifluoroethane, reagent-grade).

7.2. Aliphatic hydrocarbon mixture to use as a standard. A light mineral oil is the preferred standard, although gasoline, kerosene, or diesel fuel can be used.

7.3. Hydrochloric acid (1:1). Mix equal volumes of concentrated HCl and distilled water.

7.4. Sodium sulfate (anhydrous crystal).

8. Calibration and Standards

8.1. Although the standard curve is theoretically linear from zero absorbance to infinite absorbance, precision and accuracy for any infrared determination are highest when the absorbancies are kept between 0.1 and 1.0 absorbance units.

8.2. Calibration standards.

8.2.1. Stock standard. Weigh 20 - 50 mg of the standard hydrocarbon mixture into a tared 100-mL volumetric flask. Dilute to volume with fluorocarbon-113.

8.2.2. Working standards. Dilute portions of the stock standard to give at least three standards with concentrations between 40 and 400 μg/mL. This should give a standard curve between approximately 0.1 and 0.9 absorbance units.

9. Procedure

9.1. Mark the sample bottle at the water meniscus for later determination of sample volume. If the sample was not acidified at the time of collection, add 5 mL of hydrochloric acid to the sample bottle. After mixing, check the pH by touching pH-sensitive paper to the cap to ensure that the pH is 2 or lower. Add more acid if necessary.

9.2. Pour the sample into a separatory funnel.

9.3. Add 30 mL of fluorocarbon-113 to the sample bottle and rotate the bottle to rinse the sides. Transfer the solvent to the separatory funnel. Extract by shaking vigorously for 2 min. Allow the layers to separate.

9.4. Filter the solvent layer through anhydrous sodium sulfate into a 100-mL volumetric flask.

9.5. Repeat Steps 9.3 and 9.4 twice more with 30-mL portions of fresh solvent, combining all solvent into the volumetric flask.

9.6. Rinse the tip of the separatory funnel and sodium sulfate with a total of 5 - 50 mL of solvent and collect the rinsings in the volumetric flask. Dilute the extract to 100 mL.

9.7. Fill a clean 1-cm cell with the extract. Determine the absorbance over the range 2700 - 3100 cm^{-1} using pure fluorocarbon-113 as a reference. Refer to the spectrometer operation manual for instructions on how to accomplish this. If the absorbance exceeds 0.9, prepare an appropriate dilution and rerun the absorbance curve. If the absorbance is too low (<1.0), use the longer cells to improve the sensitivity.

9.8. Calibrate the instrument for the appropriate cells using a series of at least three working standards covering the range from 0.1 - 0.9 absorbance units.

10. Calculations

10.1. Measure the peak absorbance at approximately 2930 cm^{-1}. Measure background absorbencies on both sides of the peak cluster at approximately 2800 cm^{-1} and 3010 cm^{-1}.

10.2. Calculate the background at 2930 cm^{-1} by interpolation between that measured on the two sides.

10.3. Calculate the absorbance due to the sample by subtracting the calculated background at 2930 cm^{-1} from the peak absorbance.

10.4. Plot a standard curve from the data for the standards by plotting the absorbance value vs the concentration of the standard in mg of petroleum hydrocarbons per 100 mL of solution.

10.5. Determine the concentration of petroleum hydrocarbons in the extract by comparing the resulting absorbance against the standard curve.

10.6. Calculate the petroleum hydrocarbons in the sample using the following equation.

$$\text{mg/L petroleum hydrocarbons} = \frac{R \times D}{V} \quad ,$$

where R = concentration of petroleum hydrocarbons as determined from the standard curve (mg),
D = extract dilution factor, if necessary, and
V = volume of sample (L).

11. Source Materials

11.1 "Petroleum Hydrocarbons, Total Recoverable," EPA Method 418.1 (Spectrophotometric, Infrared), Storet No. 45501 (1978).

PHENOL IN URINE - GAS CHROMATOGRAPHY

Analyte: Phenol	**Method No.:** IH280
Matrix: Urine	**Detection Limit:** 2 mg/L
Procedure: Hydrolysis of phenol conjugates; extraction with ethyl acetate; GC analysis	**Precision:** ±4.1% RSD
Effective Date: 12/15/82 to 09/10/92	**Contact Person:** Stuart D. Nielsen

1. **Principle of Method**

   1.1. Phenol is the major benzene metabolite eliminated in the urine and is used to measure benzene exposure.

      1.1.1. Approximately 51-87% of the retained benzene is excreted in the urine as phenol.

      1.1.2. Urinary phenol levels in unexposed individuals are usually less than 10 mg/L. A base line should be obtained before possible exposure because of the variation in phenol levels that exists among individuals.

   1.2. Phenol conjugates are hydrolyzed by the addition of concentrated hydrochloric acid followed by heating in a water bath.

   1.3. The phenol is extracted with ethyl acetate and analyzed by gas chromatography.

2. **Accuracy and Precision**

   2.1. The accuracy of the analysis has not yet been established.

   2.2. The precision of the method is good to ±4.09%.

3. **Sensitivity**

   3.1. The method is sensitive to 2.0 mg/L of sample. A result of 75 mg/L or greater indicates a possible exposure to benzene.

4. **Interferences**

   4.1. The equivalent levels of benzene calculated from the phenol values are approximate because of biological factors that influence elimination of benzene.

   4.2. Consumption of ethyl alcohol after exposure to benzene accelerates the elimination of phenols in the urine.

5. Collection and Storage of Samples

5.1. Collect urine samples close to the end of the working day.

5.2. Add a few granules of cupric sulfate to the sample as a preservative and store in a refrigerator.

6. Apparatus

6.1. Gas chromatograph: equipped with a flame ionization detector.

6.2. Column: 30-m by 0.25-mm DB-5 fused-silica capillary.

6.3. Recorder with an electronic integrator: to measure peak areas.

6.4. Volumetric pipettes: 1-, 3-, 5-, and 10-mL.

6.5. Water bath.

6.6. Clinical centrifuge.

6.7. Microsyringe: 10-µL.

6.8. Centrifuge tubes: 12- and 40-mL.

6.9. Flask: 25-mL with glass stoppers.

7. Reagents

7.1. Phenol.

7.2. Ethyl acetate.

7.3. Hydrochloric acid (concentrated).

8. Calibration and Standards

8.1. Prepare a 10 mg/mL phenol stock solution.

8.2. Prepare a standard curve in urine from the stock phenol solution at levels of 0, 10, 25, 50, 100, and 200 µg/mL.

8.3. The standards are processed through the chemical procedure along with the samples.

9. Procedure

9.1. Hydrolysis of phenol conjugates.

9.1.1. Pipette 5 mL of the urine samples and the standards into 25-mL glass-stoppered flasks.

9.1.2. Slowly add 1 mL of concentrated HCl.

9.1.3. Heat the samples in a 95°C water bath for 2 h.

9.2. Extraction.

9.2.1. Transfer the hydrolyzates to 40-mL centrifuge tubes.

9.2.2. Add 3 mL of ethyl acetate and shake three times.

9.2.3. Remove the ethyl acetate layer to a 12-mL centrifuge tube.

9.2.4. Repeat the extraction two more times using 1 mL aliquots of ethyl acetate. Combine all the extracts in the 12-mL centrifuge tube.

9.2.5. Shake the solutions by vortexing. Centrifuge for 5 min at 3000 rpm in a clinical centrifuge.

9.2.6. Aspirate the upper layer and either concentrate the solution to 2 mL or add ethyl acetate to bring the volume up to 2 mL.

9.2.7. If it is necessary to carry the determination over to a second day, refrigerate the samples and standards to prevent possible loss of phenol.

9.3. Gas chromatographic analysis.

9.3.1. Gas chromatograph conditions representative for the Hewlett-Packard Model 5880 A.

- Helium carrier gas flow rate, 1.5 mL/min.
- Hydrogen gas flow rate, 35 mL/min.
- Air flow rate, 550 mL/min.
- Injection port temperature, 250°C.
- Detector temperature, 250°C.
- Column temperature, 100°C.

9.3.2. Inject a 2-μL aliquot of sample extract into the gas chromatograph and record the attenuation and peak area of the phenol. At least duplicate injections of the same sample or standard are recommended.

10. Calculations

10.1. Prepare the standard curve data by averaging the integrated chromatographic peak areas at each standard at each concentration.

10.2. Plot the standard curve on linear graph paper with concentration of phenol in µg/mL on the x-axis and peak area on the y-axis.

10.3. Determine the concentration of the samples from the standard curve.

10.4. An equivalent benzene exposure level corresponding to the observed phenol level is given in Table I.

TABLE I. A CORRESPONDING MG/LITER EQUIVALENT OF PHENOL TO PPM BENZENE EXPOSURE LEVEL[a]

Urinary Phenol (mg/L)	Approx Av 8 h Equiv Benzene Air Level (ppm)
100	10
120	13
140	16
160	19
180	22
200	25
220	27
240	29
260	31
280	33
300	35
320	38
340	41
360	44
380	47
400	50
420	53
440	56
460	59
480	62
500	65
520	68
540	71
560	74
580	77
600	80

[a]From Pragnatto, see Source Material 11.2, p.131.

11. Source Materials

11.1. A. M. Martinez, "A Modified Phenol Procedure," Industrial Hygiene Group Memorandum 80-799 dated July 1, 1980, Los Alamos National Laboratory.

11.2. "Occupational Exposure to Benzene," NIOSH Criteria Document 74-137, U.S. Department of Health, Education and Welfare, Public Health Service, Center for Disease Control, National Institute for Occupational Safety and Health (1974).

PHENOL IN URINE - HPLC

Analyte: Phenol	**Method No:** IH290
Matrix: Urine	**Sensitivity:** 10 mg/mL
Procedure: Hydrolysis of urine with hydrochloric acid; extraction of phenol with isopropyl ether; analysis by high-performance liquid chromatography (HPLC)	**Detection Limit:** 10 μg/mL **Precision:** 25% RSD
Effective Date: 02/10/84 to 09/10/92	**Author:** Ruth Sherman

1. **Principle of Method**

   1.1. A known volume of urine is hydrolyzed with concentrated hydrochloric acid.

   1.2. Samples and standards are extracted with isopropyl ether.

   1.3. The solvent is concentrated by a dry nitrogen stream.

   1.4. The samples and standards are redissolved in mobile phase.

   1.5. The filtrate is analyzed by HPLC.

   1.6. Integrated peak areas of standards are used to determine a standard curve.

   1.7. Integrated peak areas of samples are plotted on the standard curve.

2. **Precision and Detection Limit**

   2.1. A precision of 25% relative standard deviation is attained by averaging the integrated peak areas of several runs at a concentration of 50 μg/mL and then determining the standard deviation and the relative standard deviation.

   2.2. The detection limit is 10 μg/mL and is calculated as twice the standard deviation of integrated peaks of minimum detectable concentration.

3. **Advantages and Disadvantages of Method**

   3.1. Preparation of samples by this method is simpler than by other methods.

   3.2. Analytical time is rapid; phenol elutes in about 5 min. Several runs of one sample, plus turnaround time, take about 15 min.

3.3. Several substituted phenols, cresol, and nitrobenzene can also be analyzed using this method.

3.4. The metabolites in urine vary quantitatively and qualitatively. It is possible that a metabolite not previously seen in urine samples could interfere with the detection of phenol.

4. Apparatus

4.1. Pipettes: Eppendorf and volumetric, various sizes.

4.2. Centrifuge tubes: 15-mL, graduated.

4.3. Balance: Sartorius, Göttingen, Germany.

4.4. Volumetric flasks: 10- and 50-mL.

4.5. Ultrasonic cleaner: Branson B224, Shelton, Connecticut.

4.6. Centrifuge: IEC Clinical, Needham Heights, Massachusetts.

4.7. Hot plate: Thermolyne Type 2200.

4.8. Test tubes: 15-mL.

4.9. Sample vials: 3-mL, Supelco, Bellefonte, Pennsylvania.

4.10. Sep-Pak preparation cartridge: C_{18}, Waters Associates, Milford, Massachusetts.

4.11. Luer-lock syringe: 5-mL, Becton, Dickinson & Co., Rutherford, New Jersey.

4.12. Hypodermic syringe: Precision Sampling Corp., Baton Rouge, Louisiana.

4.13. Liquid chromatograph: Model No. 6000, Waters Associates.

4.14. Radial compression module: Model No. 100, Waters Associates.

4.15. Radial-Pak C_{18} chromatography cartridge: Waters Associates.

4.16. Variable wavelength detector: Chromonitor 785, Micrometrics Instrument Corp., Norcross, Georgia.

4.17. Digital integrator: Minigrator, Spectra-Physics Corp., Santa Clara, California.

4.18. Filter and amplifier: Model No. 1021A, Spectrum, Newark, Delaware.

4.19. Strip chart recorder: Model No. 8377-10, Cole-Parmer Instrument Company, Chicago, Illinois.

4.20. Vacuum filtering system: Millipore Corp., Bedford, Massachusetts.

4.21. Filters: 0.45-μ, Nylon 66, Rainin Instrument Company, Inc., Woburn, Massachusetts.

4.22. Stoppers: polyethylene, to fit centrifuge tubes.

5. Reagents

5.1. Methanol (HPLC-grade). J. T. Baker Chemical Company, Phillipsburg, New Jersey.

5.2. Distilled water.

5.3. Hydrochloric acid. J. T. Baker Chemical Company, Phillipsburg, New Jersey.

5.4. Isopropyl ether. Eastman Kodak Company, Rochester, New York.

5.5. Sodium sulfate. Matheson, Coleman & Bell, Norwood, Ohio.

6. Calibration and Standards

6.1. Prepare a stock standard of 1000 μg/mL of each of the following compounds in distilled water.

- p-Chlorophenol - Chem Services, Inc., West Chester, Pennsylvania.
- p-Cresol - Chem Services, Inc., West Chester, Pennsylvania.
- p-Methoxyphenol - Chem Services, Inc., West Chester, Pennsylvania.
- Nitrobenzene - Chem Services, Inc., West Chester, Pennsylvania.
- p-Nitrophenol - Chem Services, Inc., West Chester, Pennsylvania.
- Phenol - Baker Analyzed Reagent, J. T. Baker Chemical Co., Phillipsburg, New Jersey.

6.2. Preparation of standard curve.

6.2.1. Pour 3 mL of urine into 15-mL graduated centrifuge tubes.

6.2.2. Add the stock standard as follows:

	Amount (μL)	μg/mL Urine
Tube 1	30	10
Tube 2	150	50
Tube 3	300	100
Tube 4	450	150
Tube 5	600	200
Tube 6-8	0	0

6.2.3. Add 1 mL of concentrated hydrochloric acid to each tube.

6.2.4. Centrifuge each tube for 5 min.

6.2.5. Place the stoppered tubes in a water bath at 95°C for 1-1/2 hours.

6.2.6. Remove the tubes from the water bath and cool to room temperature.

6.2.7. Adjust the level of liquid in each tube to 10 mL with distilled water.

6.2.8. Place a few milligrams of sodium sulfate into clean 15-mL test tubes. Sodium sulfate is a drying agent and does not have to be weighed.

6.2.9. Add 2 mL of isopropyl ether to each tube and shake vigorously.

6.2.10. Remove the ether layer to the 15-mL test tubes.

6.2.11. Repeat Steps 6.2.9. and 6.2.10. two more times.

6.2.12. Filter the combined ether layers into a sampling vial.

6.2.13. Evaporate the solvent in dry nitrogen until concentrated to 0.5 mL.

6.2.14. Add 1 mL of methanol and let evaporate in nitrogen to 0.2 mL. Repeat.

6.2.15. Take sample to 1 mL with the mobile phase (80% water and 20% methanol).

6.2.16. Seal and refrigerate the samples pending analysis.

7. Procedure

7.1. Preparation of sample solutions.

7.1.1. Repeat Steps 6.2.1. through 6.2.16. for sample preparation, eliminating Step 6.2.2.

7.2. Analysis of standards and samples.

7.2.1. Analyze the standards and samples by HPLC using the following conditions:

- Mobile phase 80% water, 20% methanol.
- Sample injection size, 10 μL.
- Flow rate, 2 mL/min.
- UV detection wavelength, 271 nm.
- Detector sensitivity, 0.01 AUFS.
- Chart rate, 1 cm/min.

7.2.2. Alternately run the standards and the samples.

8. Calculations

8.1. Standard curve.

8.1.1. Prepare the standard curve data by averaging the integrated chromatographic peak areas of each standard at each concentration.

8.1.2. Plot the data points with concentration on the x-axis and integrated area on the y-axis.

8.1.3. Determine sample concentration by plotting sample integrated area on the standard curve.

8.2. Method of standard addition.

8.2.1. Instead of preparing standards as in Step 6.2.2., add increments of 30, 60, and 90 μL of standard phenol to each sample.

8.2.2. Determine the concentration of sample by linear regression of the above concentrations of phenol added to the original sample.

8.3. Choice of method.

8.3.1. If there are a large number of samples and/or more than one compound is being analyzed, use Section 8.1.

8.3.2. If there are very few samples and only one compound is being analyzed, use Section 8.2.

9. Source Materials

9.1. J. Angerer, "Occupational Chronic Exposure to Organic Solvents, Section V. Chromatographic Methods for the Determination of Phenols in Urine," *Int. Arch. Occup. Environ. Health* **42**, 257-269 (1979).

9.2. D. G. Taylor, ed. *NIOSH Manual of Analytical Methods*, 2nd ed. Vol. 3, (U.S. Government Printing Office, Washington, D.C., 1977), p. S330.

PHENOL IN WATER - HPLC

Analyte: Phenol	**Method No.:** IH300
Matrix: Water	**Sensitivity:** 10 µg/mL
	Precision: 8.5% RSD
Procedure: Acidify samples; inject into a high-performance liquid chromatograph (HPLC) for analysis	**Detection Limit:** 0.3 µg/mL
Effective Date: 06/11/84 to 09/10/92	**Author:** Ruth Sherman

1. **Principle of Method**

   1.1. Samples are acidified with 10% sulfuric acid.

   1.2. Samples are injected into an HPLC for analysis.

   1.3. Integrated peak areas of standards are used to determine a standard curve.

   1.4. Integrated peak areas of samples are plotted on the standard curve to obtain concentrations.

2. **Precision, Sensitivity, and Detection Limit**

   2.1. A precision of 8.5% relative standard deviation is the result of averaging the integrated peak areas of several runs at concentrations of 5 and 10 µg/mL and then determining the standard deviation and the relative standard deviation.

   2.2. The sensitivity is the minimum concentration at which 0.0005 AUFS is detected (10 µg/mL).

   2.3. The detection limit is twice the standard deviation of the integrated peaks of a minimum detectable concentration (0.3 µg/mL of phenol).

3. **Advantages and Disadvantages of Method**

   3.1. Sample preparation before analysis is minimal.

   3.2. Analytical time is rapid with phenol eluting in about 3.5 min. Several runs of one sample take about 15 min.

   3.3. The disadvantage of the method is that a compound other than phenol could be eluting at the same retention time as phenol.

4. Apparatus

4.1. Pipettes: Eppendorf and volumetric.

4.2. Balance: (±0.1 mg), or equivalent, Sartorius, Göttingen, Germany.

4.3. Volumetric flasks: 10- and 50-mL.

4.4. Hypodermic syringe: 25-μL, Precision Sampling Corp., Baton Rouge, Louisiana.

4.5. Liquid chromatograph: Model 6000, Waters Associates, Milford, Massachusetts, or equivalent.

4.6. Radial compression module: Model 100, Waters Associates.

4.7. Radial-Pak C_{18} chromatography cartridge: Waters Associates.

4.8. Variable wavelength detector: Chromonitor 785, Micrometrics Instrument Corp., Norcross, Georgia, or equivalent.

4.9. Digital integrator: Minigrator, Specta-Physics Corp., Santa Clara, California, or equivalent.

4.10. Signal filter and amplifier: Model No. 1021A, Spectrum, Newark, Delaware, or equivalent.

4.11. Strip chart recorder: Model No. 8377-10, Cole-Parmer Instrument Company, Chicago, Illinois, or equivalent.

4.12. Vacuum filtering system: Millipore Corp., Bedford, Massachusetts.

4.13. Filters: 0.45-μ, Nylon 66, Rainin Instrument Company, Inc., Woburn, Massachusetts.

5. Reagents

5.1. Methanol (HPLC-grade). J. T. Baker Chemical Company, Phillipsburg, New Jersey.

5.2. Distilled water.

5.3. Acetic acid. Mallinckrodt, Inc., St. Louis, Missouri.

5.4. Acetic anhydride. Eastman Kodak Company, Rochester, New York.

5.5. Phenol. Baker Analyzer Reagent, J. T. Baker Chemical Company.

5.6. Concentrated sulfuric acid. Mallinckrodt, Inc., Paris, Kentucky.

6. Calibration and Standards

6.1. Dissolve 50 mg of phenol in 50 mL of distilled water for a 1000-µg/mL standard solution.

6.2. Prepare a standard curve using the phenol from Step 6.1. as follows:

	Phenol (mL)	Water (mL)	µg/mL
Tube 1	0.200	9.8	20
Tube 2	0.500	9.5	50
Tube 3	0.700	9.3	70
Tube 4	1.000	9.0	100

7. Procedure

7.1. Preparation of mobile phase.

7.1.1. Dissolve acetic anhydride in glacial acetic acid to equal 2.5% by volume.

7.1.2. Add methyl alcohol to water to a concentration of 20% by volume.

7.1.3. Add the glacial acetic acid solution prepared in Step 7.1.1. to the methyl alcohol solution prepared in Step 7.1.2. to a concentration of 0.2% by volume.

7.1.4. Filter the solution through a 0.45-µ filter using a vacuum apparatus.

7.2. HPLC operating conditions.

- Mobile phase, 80% water, 20% methanol, and 0.2% acetic acid.
- Isocratic and isothermal (ambient).
- Sample injection size, 50 µL.
- Flow rate, 2 mL/min.
- Analytical wavelength, 254 nm.
- Detector sensitivity, 0.01 AUFS.
- Chart rate, 1 cm/min.

7.3. Analysis of standards and samples.

7.3.1. Acidify all samples and standards to a pH of less than 4 with 10% sulfuric acid.

7.3.2. Inject 50 µL of each standard into the HPLC to prepare the standard curve. Make two or three injections of the standard.

7.3.3. Inject 50 µL of each sample into the HPLC. Make two or three sample injections.

8. Calculations

8.1. Prepare the standard curve by averaging the integrated chromatographic peak areas of each standard at each concentration.

8.2. Plot the data points with concentration on the x-axis and integrated area on the y-axis.

8.3. Determine the sample concentration by plotting the sample integrated area on the standard curve.

9. Source Material

9.1. J. Angerer, "Occupational Chronic Exposure to Organic Solvents, Section V. Chromatographic Methods for the Determination of Phenols in Urine," *Int. Arch. Occup. Environ. Health* **42**, 257-268 (1979).

POLYCHLORINATED BIPHENYLS (PCBs) IN AIR

Analyte: Polychlorinated biphenyls (PCBs)	**Method No.:** IH310
Matrix: Air	**Precision:** 10% RSD
Procedure: Adsorption on Florisil; hexane desorption; gas chromatography with electron capture detection or via a perchlorination technique	**Detection Limit:** 0.01 μg/mL
Effective Date: 06/01/82 to 01/04/93	**Author:** Carol Sutcliffe

1. Principle of Method

1.1. Sampling. A measured volume of air is drawn through a PCB sorbing sample tube containing two sections of Florisil separated by a urethane foam.

1.2. Standard analytical procedure.

1.2.1. The collected PCBs are desorbed with hexane using lindane as an internal standard, and the resulting solutions are analyzed using gas chromatography (GC) with electron capture detection.

1.2.2. The identification of a particular PCB is determined by matching the unknown PCB chromatogram to the fingerprint pattern of standard PCB chromatograms. The concentration of PCB relative to a PCB standard is read from standard curves of five or six prominent peaks and averaged.

1.3. Perchlorination analytical procedure.

1.3.1. This procedure is used if the air sample is found to differ significantly in composition from the PCB standard or if the sample matrix is complex.

1.3.2. The sample solution is concentrated and reacted with perchlorination reagent A (Analabs, Inc.).

1.3.3. Decachlorobiphenyl, the product of perchlorination, is extracted into hexane, concentrated, and compared to a decachlorobiphenyl standard curve.

2. Range and Detection Limits

2.1. The estimated useful range of the Standard Analytical Procedure is 0.05-10 mg/m^3.

2.2. The estimated useful range of the Perchlorination Analytical Procedure is 0.01-10 mg/m^3.

3. Interferences

3.1. Special care to avoid contamination is required when using electron capture detection.

3.1.1. The syringe must be thoroughly cleaned with hexane and methanol after each injection.

3.1.2. Hexane should be injected into the system periodically for a purity check. The chromatogram should show no peaks after 3 min using a 30-m capillary column.

3.2. Any compound that has nearly the same retention time on the GC column as any of the peaks of a PCB is an interference.

3.2.1. This type of interference may be overcome by matching several peaks within the PCB fingerprint for identification and obtaining concentration values from five to six peaks. Any outlier is not considered in the average concentration.

3.2.2. Because each specific PCB fingerprint is considered unique, absolute identification can be obtained by this method. Comparison is made of the retention times and relative amounts of five to six prominent peaks. The appearance of too many outliers requires Gas Chromatography/Mass Spectrometry (GC/MS) confirmation.

3.3. Biphenyl, if present in the PCB mixture, will be an interference when samples are analyzed by perchlorination.

4. Apparatus

4.1. Personal sampling pump: to operate in the range of 50-200 mL/min. The pump should be calibrated with a representative sorbent tube in the sampling line.

4.2. Sorbent tubes: glass, at least 7-cm long with 4-mm i.d. containing two sections of 30-48 mesh deactivated Florisil.

4.3. Terminal: capable of running basic programs.

4.4. Gas chromatograph: equipped with an electron capture detector (^{63}Ni) and an integrator or recorder.

4.5. Automatic liquid sampler (ALS).

4.6. Automatic liquid sampler vials: 1-mL, with crimp-sealed Teflon-lined caps.

4.7. Fused-silica capillary column: 30-m by 0.25-mm with an SE-54 bonded liquid phase.

POLYCHLORINATED BIPHENYLS (PCBs) IN AIR

Analyte: Polychlorinated biphenyls (PCBs)	**Method No.:** IH310
Matrix: Air	**Precision:** 10% RSD
Procedure: Adsorption on Florisil; hexane desorption; gas chromatography with electron capture detection or via a perchlorination technique	**Detection Limit:** 0.01 μg/mL
Effective Date: 06/01/82	**Author:** Carol Sutcliffe

1. Principle of Method

1.1. Sampling. A measured volume of air is drawn through a PCB sorbing sample tube containing two sections of Florisil separated by a urethane foam.

1.2. Standard analytical procedure.

1.2.1. The collected PCBs are desorbed with hexane using lindane as an internal standard, and the resulting solutions are analyzed using gas chromatography (GC) with electron capture detection.

1.2.2. The identification of a particular PCB is determined by matching the unknown PCB chromatogram to the fingerprint pattern of standard PCB chromatograms. The concentration of PCB relative to a PCB standard is read from standard curves of five or six prominent peaks and averaged.

1.3. Perchlorination analytical procedure.

1.3.1. This procedure is used if the air sample is found to differ significantly in composition from the PCB standard or if the sample matrix is complex.

1.3.2. The sample solution is concentrated and reacted with perchlorination reagent A (Analabs, Inc.).

1.3.3. Decachlorobiphenyl, the product of perchlorination, is extracted into hexane, concentrated, and compared to a decachlorobiphenyl standard curve.

2. Range and Detection Limits

2.1. The estimated useful range of the Standard Analytical Procedure is 0.05-10 mg/m^3.

2.2. The estimated useful range of the Perchlorination Analytical Procedure is 0.01-10 mg/m^3.

3. Interferences

3.1. Special care to avoid contamination is required when using electron capture detection.

3.1.1. The syringe must be thoroughly cleaned with hexane and methanol after each injection.

3.1.2. Hexane should be injected into the system periodically for a purity check. The chromatogram should show no peaks after 3 min using a 30-m capillary column.

3.2. Any compound that has nearly the same retention time on the GC column as any of the peaks of a PCB is an interference.

3.2.1. This type of interference may be overcome by matching several peaks within the PCB fingerprint for identification and obtaining concentration values from five to six peaks. Any outlier is not considered in the average concentration.

3.2.2. Because each specific PCB fingerprint is considered unique, absolute identification can be obtained by this method. Comparison is made of the retention times and relative amounts of five to six prominent peaks. The appearance of too many outliers requires Gas Chromatography/Mass Spectrometry (GC/MS) confirmation.

3.3. Biphenyl, if present in the PCB mixture, will be an interference when samples are analyzed by perchlorination.

4. Apparatus

4.1. Personal sampling pump: to operate in the range of 50-200 mL/min. The pump should be calibrated with a representative sorbent tube in the sampling line.

4.2. Sorbent tubes: glass, at least 7-cm long with 4-mm i.d. containing two sections of 30-48 mesh deactivated Florisil.

4.3. Terminal: capable of running basic programs.

4.4. Gas chromatograph: equipped with an electron capture detector (^{63}Ni) and an integrator or recorder.

4.5. Automatic liquid sampler (ALS).

4.6. Automatic liquid sampler vials: 1-mL, with crimp-sealed Teflon-lined caps.

4.7. Fused-silica capillary column: 30-m by 0.25-mm with an SE-54 bonded liquid phase.

4.8. Vials: 5-mL, with Teflon-lined caps.

4.9. Microliter syringe: 10-μL.

4.10. Volumetric flasks: 10-mL, with glass stoppers.

4.11. Culture tubes: 13- by 100-mm with unlined screw-top caps.

4.12. Water bath.

4.13. Vortex mixer.

4.14. Glass pipettes: 1- and 3-mL.

4.15. Pipettes: Eppendorf or equivalent.

5. Reagents

5.1. Hexane (ACS reagent).

5.2. Nitrogen (prepurified).

5.3. PCB standards.

5.4. Perchlorination reagent A, Analabs, Inc.

5.5. Lindane.

5.6. Decachlorobiphenyl.

5.7. Sodium sulfate (anhydrous).

5.8. Hydrochloric acid (25%, aqueous).

6. Calibration and Standards

6.1. Stock standard solution.

6.1.1. Weigh out 0.001 g of PCB (≥99%). Rinse with hexane into a 10-mL volumetric flask and fill to volume. This 100 mg/mL solution is good for several months when sealed with parafilm and stored in a refrigerator.

6.1.2. A commercially prepared 100 mg/mL standard may also be used as the stock standard solution.

6.1.3. Using gas chromatography, compare the standards periodically with new standards to ensure that no evaporation of the solvent has taken place.

6.2. Internal standard solution.

6.2.1. Weigh out 0.001 g of lindane. Rinse with hexane into a 10-mL volumetric flask and fill to volume to make a 100 mg/L solution.

NOTE: Lindane is both heat and light sensitive. Seal it tightly with parafilm and store it in the refrigerator in the dark.

6.2.2. Dilute 1 mL of above solution to 100 mL in a volumetric flask to make a 1.0 mg/L internal standard solution.

6.2.3. The above solutions can be used for two months if stored properly.

6.3. Standards.

6.3.1. Prepare five standards of the PCB of interest in the range of 0.05-10.0 mg/L using the internal standard solution.

6.3.2. Place approximately 0.5 mL of internal standard in a 1-mL volumetric flask. Transfer the proper aliquot of standard stock solution below the surface of the internal standard using a microsyringe. Fill the volumetric flask to volume and mix.

6.3.3. Transfer to an ALS vial and seal.

6.3.4. Prepare standard curves for at least five of the major peaks of the PCB of interest. See Table I.

TABLE I. FACTORS TO CONVERT DECACHLOROBIPHENYL TO AN EQUIVALENT AMOUNT OF AROCLOR[a]

Aroclor	Average Molecular Weight	Q[b]
1221	189	0.38
1232	223	0.45
1242	258	0.52
1016	258	0.52
1248	292	0.59
1254	326	0.65
1260	372	0.75

[a]Taken from Source Material 9.2.
[b]Calculated by dividing the average molecular weight by the molecular weight of decachlorobiphenyl, 499.

6.3.5. Plot the standard curves on linear graph paper with concentration of PCB in mg/L on the x-axis and area of the PCB peak divided by area of 1 mg/L of lindane on the y-axis and run a least-squares fit on the data.

6.3.6. Run at least one standard solution daily because of day-to-day variation in response of the electron capture detector.

6.4. Perchlorination procedure.

6.4.1. Prepare decachlorobiphenyl standards from 0.01 mg/mL to 10 mg/mL using 1 mL of internal standard solution.

6.4.2. Plot the standard curve on linear graph paper with concentration (mg/L) on the x-axis and area of decachlorobiphenyl divided by the area of lindane on the y-axis. Run a least-squares fit on the data.

6.4.3. Determine the concentration of the unknown sample from the standard curve.

6.4.4. Run at least one standard solution daily because of day-to-day variation in the response of the electron capture detector.

7. Procedure

7.1. Cleaning of equipment.

7.1.1. Wash all glassware used for analysis with detergent and rinse with tap water, distilled water, acetone, and hexane.

7.1.2. Dry in an oven at 150°C.

7.2. Analysis of samples.

7.2.1. Preparation of samples.

7.2.1.1. Score each tube with a file and place the glass wool and sorbent from the front section of the sampling tube into a clean, dry vial.

7.2.1.2. Place the separating urethane foam plug, the back section of the sorbent, and the retaining urethane foam plug in a second vial.

7.2.1.3. If the PCBs are known to be present at small concentrations, both front and back sorbent sections and urethane foam plugs may be combined into one vial.

7.2.2. Desorption of samples.

7.2.2.1. Pipette 1.0 mL of internal standard solution into each vial. Florisil particles should not be allowed to cling to the glass above the solvent.

7.2.2.2. A minimum of 30 min desorption time is required before analysis.

7.2.3. Preliminary analysis.

7.2.3.1. Inject 1 μL of sample at the conditions specified in Step 7.2.4.

7.2.3.2. If the sample is too concentrated, dilute further to bring the sample solution into the linear range of the electron capture detector.

7.2.3.3. Compare the chromatogram of the sample to PCB standards to determine if the air sample is qualitatively similar to any PCB (see Figs. 1-8). If the sample can be matched to a standard, proceed with the standard analytical procedure, Step 7.2.5. If there is no match, follow the perchlorination analytical procedure, Step 7.2.6.

7.2.4. Gas chromatographic conditions for PCB determination:

- SE-54 fused-silica capillary column, 30-m by 0.25-mm.
- Helium carrier gas, 1-2 mL/min.
- Nitrogen make-up gas, 28-30 mL/min.
- Injection port temperature, 300°C.
- Detector temperature, 350°C.
- Column temperature, 120-220°C programmed at 15°/min, 220°-280°C programmed at 4°/min, then hold for 20 min.
- 1-μL splitless injection with a 0.55-min delay.

7.2.5. Standard analytical procedure.

7.2.5.1. Prepare a standard curve of the PCB identified in Step 7.2.3. by injecting 1 μL of standard concentrations from 0.05 to 10 mg/mL using the GC conditions listed in Step 7.2.4.

7.2.5.2. Inject 1 μL of the sample solution.

7.2.5.3. Select at least five prominent peaks from the sample chromatogram and compare with the standard curve.

7.2.6. Perchlorination analytical procedure.

7.2.6.1. Place a 200-μL aliquot of the sample into a 13- by 100-mm culture tube.

7.2.6.2. Slowly evaporate the hexane with dry nitrogen.

NOTE: Do not take to dryness.

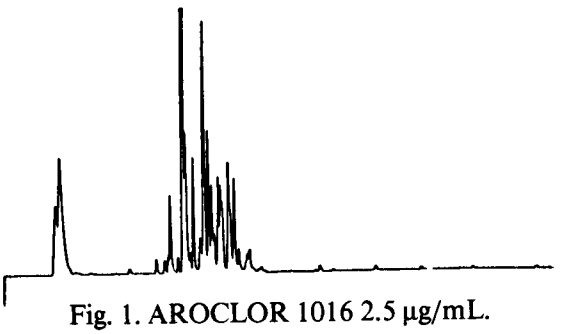

Fig. 1. AROCLOR 1016 2.5 µg/mL.

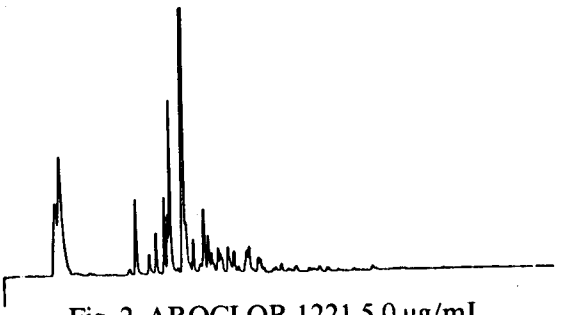

Fig. 2. AROCLOR 1221 5.0 µg/mL.

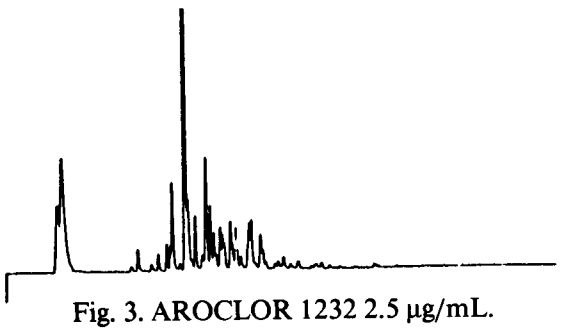

Fig. 3. AROCLOR 1232 2.5 µg/mL.

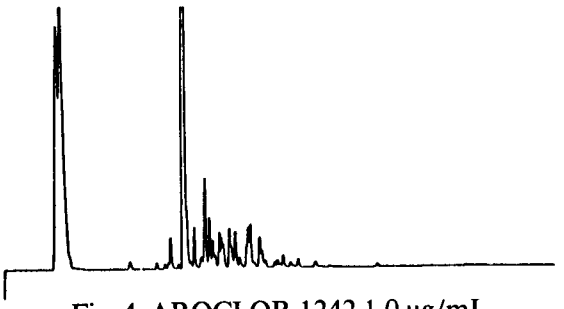

Fig. 4. AROCLOR 1242 1.0 µg/mL.

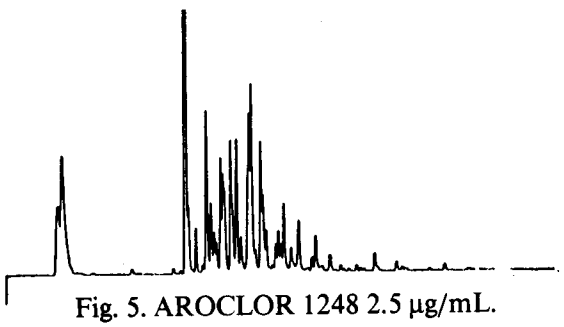

Fig. 5. AROCLOR 1248 2.5 µg/mL.

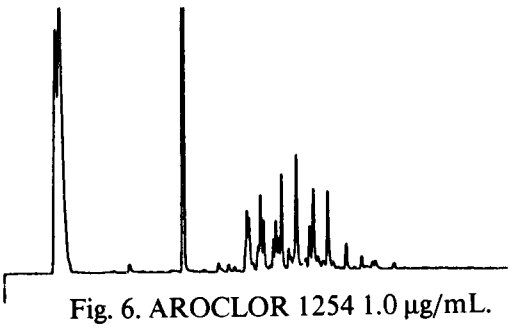

Fig. 6. AROCLOR 1254 1.0 µg/mL.

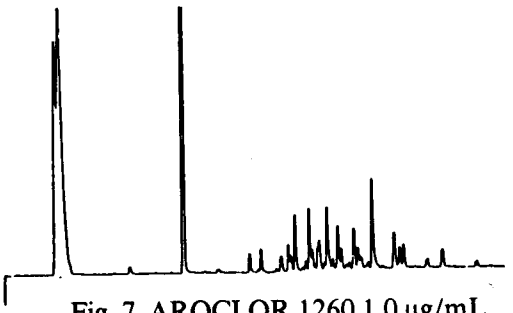

Fig. 7. AROCLOR 1260 1.0 µg/mL.

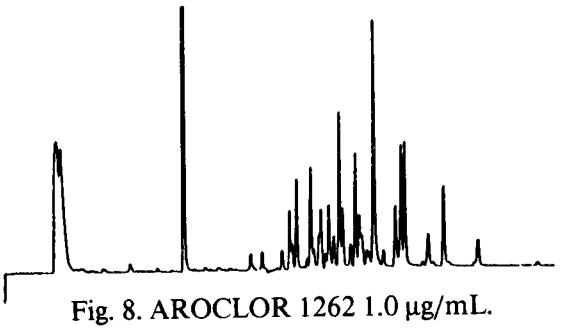

Fig. 8. AROCLOR 1262 1.0 µg/mL.

7.2.6.3. Add 1 mL of perchlorination reagent A and heat for 2 h in the loosely capped culture tube at a bath temperature of 70-75°C.

NOTE: Remove the cap liner and replace with a Teflon liner. The perchlorination reagent attacks most other liners.

Two-thirds to three-quarters of the reagent should evaporate in the 2-h period.

7.2.6.4. Add 3 mL of 25% aqueous HCl and heat the two layers at 70-75°C for 30 min.

7.2.6.5. Cool the solution and extract twice with 2 mL of hexane.

7.2.6.6. Pass each extract through a funnel containing approximately 0.5 g of anhydrous sodium sulfate. Concentrate the extract to 1 mL and proceed with the analysis as in Step 7.2.8.

CAUTION: Perchlorination reagents will react violently with water.

7.2.7. Gas chromatographic conditions for decachlorobiphenyl determination:

- SE-54 fused-silica capillary column, 30-m by 0.25-mm.
- Helium carrier gas, 1-2 mL/min.
- Nitrogen make-up gas, 28-30 mL/min.
- Injection port temperature, 300°C.
- Detector temperature, 350°C.
- Column temperature, 120-300°C at 10°/min.
- 1-µL splitless injection with a 0.55-min delay.

7.2.8. Decachlorobiphenyl analysis.

7.2.8.1. Inject 1 µL of the sample solution using the GC conditions in Step 7.2.7.

7.2.8.2. Compare the peak areas of the decachlorobiphenyl peaks to a standard curve and calculate the weight of the decachlorobiphenyl present.

8. Calculations

8.1. Standard analytical procedure.

8.1.1. Read the concentration of the sample solution from the standard curves of at least five of the major peaks in the PCB mixture. (See Table I in Method IH320 to determine which peaks to use.)

8.1.2. Average these concentrations to obtain the concentration of the sample in mg/L.

8.1.3. Multiply the concentration in mg/L of the sample by the total volume (mL) of the sample solution to calculate the weight of PCB in the sample. Corrections for the blank are made if necessary.

8.1.4. Calculate the air concentration of PCB.

$$C = \frac{W_f + W_b}{V} ,$$

where C = air concentration of PCB (mg/L),

W_f = weight of PCB on front section of tube,

W_b = weight of PCB on back section of tube, and

V = volume of air sampled (L).

8.2. Perchlorination procedure.

8.2.1. Read the concentration of decachlorobiphenyl in the sample solution directly from the calibration curve.

8.2.2. Calculate the weight of decachlorobiphenyl.

$$W_d = C \times V_t ,$$

where W_d = weight of decachlorobiphenyl,

C = concentration of sample solution from Step 8.2.1. (mg/L), and

V_t = total volume (L).

8.2.3. Calculate the weight of a specific PCB equivalent to the weight of decachlorobiphenyl using the conversion factor Q from Table I.

$$W_s = W_d \times Q ,$$

where W_s = weight of a specific PCB,

W_d = weight of decachlorobiphenyl, and

Q = conversion factor.

8.2.4. The weight of PCB in the original solution (from which the 200-μL aliquot was taken) is calculated.

$$W_t = W_s \times \frac{V}{a} \quad ,$$

where W_t = weight of PCB,

W_s = weight of a specific PCB,

V = volume of original solution (mL), and

a = volume of aliquot from the original solution (mL).

8.2.5. The weights of PCB on the front and back sections of the tube are summed, corrections for blanks are made, and the total weight of PCB in the air sample is calculated.

8.2.6. The total weight of PCB is divided by the volume of air sampled (L), and the air concentration is reported in $\mu g/m^3$.

9. Source Materials

9.1. C. S. Gian, H. S. Chan, and C. S. Neff, "Rapid and Inexpensive Method for Detection of Polychlorinated Biphenyls and Phthalates in Air," *Anal. Chem.* **47**, 2319 (1975).

9.2. J. A. Armour, "Quantitative Perchlorination of Polychlorinated Biphenyls as a Method for Confirmatory Residue Measurement and Identification," *J. Assoc. Off. Anal. Chem.* **56**, 987 (1973).

POLYCHLORINATED BIPHENYLS (PCBs) IN OIL

Analyte: Polychlorinated biphenyls (PCBs)	**Method No.:** IH320
Matrix: Oil	**Detection Limit:** 0.01 mg/L
Procedure: Gas chromatography with electron capture detection, Florisil column	**Sensitivity:** 0.01 µg/mL
Effective Date: 06/01/82 to 01/04/93	**Author:** Carol Sutcliffe

1. Principle of Method

1.1. Preliminary analytical procedure.

1.1.1. Bulk oil is run through a Clor-n-Oil kit to bracket the PCB concentration.

1.1.2. The bulk oil is diluted according to results found in Step 1.1.1. and analyzed using gas chromatography (GC) with electron capture detection.

1.1.3. The identification of a PCB is determined by matching a fingerprint pattern of retention times relative to known PCB standard chromatograms.

1.1.4. The concentration of analyte PCB relative to a given PCB standard is read from calibration curves prepared for five or six of the prominent peaks and averaged together.

1.2. Clean-up procedure.

1.2.1. If the chromatogram from Step 1.1.2. proves too complex, the bulk oil is cleaned up by eluting the bulk oil with hexane through a Florisil column.

1.2.2. The eluant is analyzed using gas chromatography with electron capture detection.

1.2.3. Identification and quantitation are determined from PCB standards.

2. Minimum Detectable Limit

2.1. The estimated useful range of the preliminary analytical procedure is 1.0-10.0 mg/L PCB using an electron capture detector.

2.2. The estimated useful range of the clean-up procedure is 0.1-10.0 mg/L with the electron capture detector.

2.3. The minimum detectable limit is very dependent on the matrix effect of the oil but is typically 1.0 μg/g oil.

3. Interferences

3.1. Strict measures to avoid contamination are required when using electron capture detection.

3.1.1. The syringe must be thoroughly cleaned after each injection by rinsing five times with hexane and five times with the new sample before injection.

3.1.2. Hexane should be injected onto the column periodically to check the column for absence of extraneous peaks. The chromatogram should show no peaks after 3 min when a 30-m capillary column is used.

3.2. Any compound having nearly the same retention time on the GC column as any of the peaks of a particular PCB being studied is an interference.

3.2.1. This type of interference may be overcome by matching several peaks within the PCB fingerprint for identification and obtaining concentration values from five to six peaks. Any outlier is not considered in the average concentration value.

3.2.2. Because each specific PCB fingerprint is considered unique, absolute identification can be obtained by this method. Comparison is made of the retention times and relative amounts of five to six prominent peaks. The appearance of too many outliers requires gas chromatography/mass spectrometry (GC/MS) confirmation.

4. Apparatus

4.1. Gas chromatograph: equipped with an electron capture detector (^{63}Ni) and an integrator or recorder.

4.2. Terminal: capable of running basic programs.

4.3. Automatic liquid sampler (ALS).

4.4. Automatic liquid sampler vials: 1-mL, with crimp-sealed Teflon-lined caps, Hewlett-Packard, Albuquerque, New Mexico.

4.5. Fused-silica capillary column: 30-m by 0.25-mm with an SE-54 or SE-30 bonded liquid phase.

4.6. Vials: 5-mL, with Teflon-lined caps.

4.7. Clor-n-Oil kits: 50- and 500-ppm test kits, Dexsil Chemical Corporation, Hamden, Connecticut.

4.8. Microliter syringe: 10-μL, assorted sizes for preparing standards.

4.9. Pyrex volumetric flasks: 1-, 10-, and 25-mL, with glass stoppers.

4.10. Vortex mixer.

4.11. Pipettes: 100-μL Eppendorf or equivalent.

4.12. Disposable pipettes.

4.13. Balance: capable of 0.1 mg resolution.

5. Reagents

5.1. Hexane (ACS-reagent).

5.2. Nitrogen (pre-purified).

5.3. PCB standards. Either 99% or as a 0.1 mg/mL solution in methanol, Chem Services, Inc., West Chester, Pennsylvania.

5.4. Lindane, Chem Services, Inc., West Chester, Pennsylvania.

5.5. Florisil.

5.6. Gases. For operation of gas chromatograph with electron capture detection.

6. Calibration and Standards

6.1. Stock standard solution.

6.1.1. Weigh out 0.001 g of PCB (≥99%). Rinse with hexane into a 10-mL volumetric flask and fill to volume. This 100 mg/mL solution is good for several months when sealed with parafilm and stored in a refrigerator.

6.1.2. A commercially prepared 100 mg/mL standard may also be used as the stock standard solution.

6.1.3. Using gas chromatography, compare the standards periodically with new standards to ensure that no evaporation of the solvent has taken place.

6.2. Internal standard solution.

6.2.1. Weigh out 0.001 g of lindane. Rinse with hexane into a 10-mL volumetric flask and fill to volume to make a 100 mg/L solution.

NOTE: Lindane is both heat and light sensitive. Seal it tightly with parafilm and store it in the refrigerator in the dark.

6.2.2. The 100 mg/L solution can be used for two months if stored properly.

6.3. Standards.

6.3.1. Prepare five standards of the PCB of interest in the range of 0.1-10.0 mg/L.

6.3.2. Place approximately 0.5 mL of hexane in a 1-mL volumetric flask. Transfer the proper aliquot of standard stock solution below the surface of the hexane using a microsyringe. Fill the volumetric flask to volume and mix.

6.3.3. The aliquots of standard stock solution added are listed below:

Volume of 100 mg/mL Stock (μL)	Concentration of PCB (mg/L)
0	0.0
1.0[a]	0.1
5.0	0.5
10.0	1.0
50.0	5.0
100.0	10.0

[a]Use 1.0 μL of 10.0 mg/L standard.

6.3.4. Add 10 μL of 100 mg/L lindane to each standard and shake.

6.3.5. Transfer to an ALS vial and seal.

6.4. Prepare standard curves for at least five of the major peaks of the PCB of interest. See Table I.

6.5. Plot the standard curves on linear graph paper with concentration of PCB in mg/L on the x-axis and area of the PCB peak divided by area of 1 mg/L of lindane on the y-axis, and run a least-squares fit on the data.

6.6. Run at least one standard solution daily because of day-to-day variation in response of the electron capture detector.

7. Procedure

7.1. Cleaning of equipment.

7.1.1. Wash all glassware used for analysis with soap and rinse with tap water, distilled water, acetone, and hexane.

7.1.2. Dry in an oven at 150°C.

7.2. Analysis of samples.

TABLE I. PEAKS USED TO QUANTIFY PCBs

PCB	Retention Time (RT)[a]	Relative Retention Time (RT-IS)[b]	Abundance Ratio [(Area Counts/Total Area Counts) × 100%]
Aroclor 1016	17.48	0.93	11.8
	18.47	1.92	39.0
	18.89	2.34	16.0
	19.23	2.68	10.9
	19.75	3.20	10.3
	20.71	4.16	12.0
Aroclor 1221	11.93	−4.64	14.7
	13.86	−2.71	6.9
	14.63	−1.94	15.8
	14.99	−1.58	9.7
	15.22	−1.35	34.1
	18.49	1.92	18.7
Aroclor 1232	15.22	−1.35	18.0
	17.50	0.93	9.9
	18.49	1.92	34.2
	18.91	2.34	13.5
	19.25	2.68	10.3
	23.47	6.90	14.1
Aroclor 1242	17.49	0.92	11.2
	18.49	1.92	36.5
	18.91	2.34	15.0
	19.25	2.68	10.1
	19.77	3.20	9.5
	23.47	6.90	17.7
Aroclor 1248	18.48	1.92	24.6
	20.72	4.16	14.1
	21.27	4.71	16.9
	22.57	6.01	24.4
	25.57	9.01	10.5
	26.98	10.42	9.5
Aroclor 1254	22.57	6.03	8.1
	23.52	6.98	13.9
	25.55	9.01	15.3
	26.95	10.41	24.1
	28.80	12.26	19.1
	30.33	13.79	19.5
Aroclor 1260	26.87	10.32	15.2
	28.23	11.68	17.4
	31.49	14.94	12.6
	33.55	17.00	11.2
	35.93	19.38	28.9
	39.30	22.75	17.7

TABLE I. PEAKS USED TO QUANTIFY PCBs (cont)

PCB	Retention Time (RT)[a]	Relative Retention Time (RT-IS)[b]	Abundance Ratio [(Area Counts/Total Area Counts) × 100%]
Aroclor 1262	26.89	10.34	9.4
	28.25	11.70	11.3
	31.51	14.96	17.8
	33.58	17.03	12.9
	35.95	19.40	32.6
	40.82	24.27	16.0

[a]These retention times may vary with different columns and chromatographic parameters.
[b]Retention time of the peak minus the retention time of the internal standard.

7.2.1. Screening of oil.

7.2.1.1. Test 5 mL of the sample oil with a Clor-n-Oil 50 ppm kit.

7.2.1.2. If the test is positive, test 5 mL of the sample oil with a Clor-n-Oil 500 ppm kit.

7.2.1.3. Depending on the results of the Clor-n-Oil test kit, dilute the sample so that the calibration curve encompasses the concentration of PCB in the sample.

NOTE: Never analyze more than 25 ppm PCB by gas chromatography/electron capture detection (GC/ECD).

7.2.1.4. Because the kits detect chlorine, false positives may be obtained if other chlorinated compounds are present.

7.2.1.5. The kits are intended for use with only light petroleum oils. Other solvents will not work.

7.2.2. Preliminary analysis.

7.2.2.1. Weigh a 1.0-mL volumetric flask half-filled with hexane. Add a 0.1-mL aliquot of bulk oil using an Eppendorf pipette with a disposable plastic tip. Rinse the tip and obtain a difference weight for the oil. Fill the volumetric flask to volume with hexane.

7.2.2.2. Make all necessary dilutions before adding the internal standard.

7.2.2.3. Add 10 μL of the 100-mg/L lindane internal standard to 1.0 mL of the diluted sample.

7.2.2.4. Inject 1 μL at the conditions specified in Step 7.2.3. using the autosampler.

7.2.2.5. If the sample is too concentrated, further dilutions are to be made to bring the sample solution into the linear range of the electron capture detector.

7.2.2.6. Compare the sample chromatogram to PCB standard chromatograms to determine if it is qualitatively similar to any of them (see Figs. 1-8). If the chromatogram is too complex to determine the PCB pattern, proceed to the clean-up procedure in Step 7.2.4.

7.2.2.7. After identification is made, prepare a standard curve for the particular PCB of interest and determine the concentration of the sample.

7.2.3. Gas chromatographic conditions for PCB determination:

- SE-54 or SE-30 bonded fused-silica capillary column, 30-m by 0.25-mm.
- Helium carrier gas, 1-2 mL/min.
- Nitrogen make-up gas, 28-30 mL/min.
- Injector temperature, 300°C.
- Detector temperature, 350°C.
- Column temperature, 120°-220°C at 15°/min, 220°-280°C at 4°/min, then hold for 20 min.
- 1-μL splitless injection with a 0.55 min delay.

7.2.4. Clean-up procedure.

7.2.4.1. Prepare a clean-up column by packing a disposable pipette with silanized glass wool and filling it three-quarters full of Florisil.

7.2.4.2. Wet the column by passing approximately 10 mL of hexane through it.

7.2.4.3. Place a 200 μL aliquot of the sample on the head of the column and elute it with 20 mL of hexane into a 25-mL volumetric flask.

7.2.4.4. Repeat Steps 7.2.2.2. through 7.2.2.6.

8. Calculations

8.1. The injection volumes of the standard and of the sample are identical. The area of the sample is divided by the area of the lindane peak. The concentration of the sample is then read directly from the standard curves.

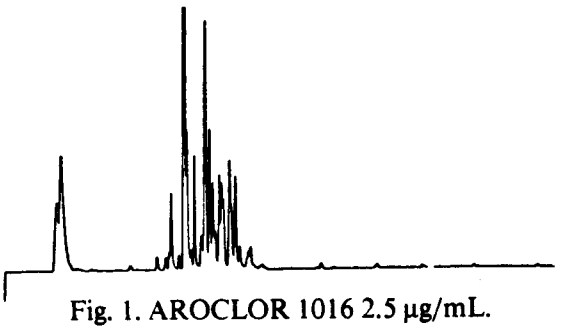

Fig. 1. AROCLOR 1016 2.5 µg/mL.

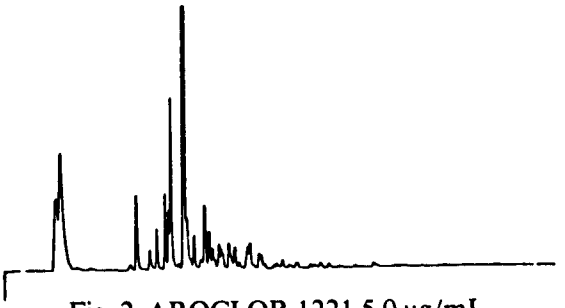

Fig. 2. AROCLOR 1221 5.0 µg/mL.

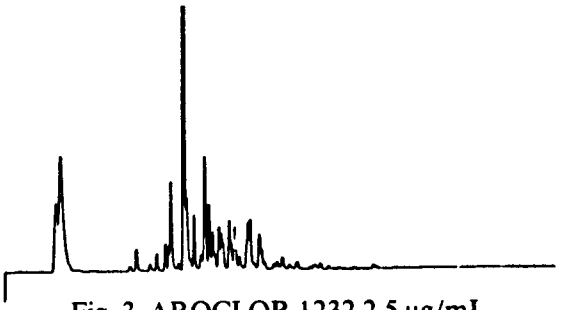

Fig. 3. AROCLOR 1232 2.5 µg/mL.

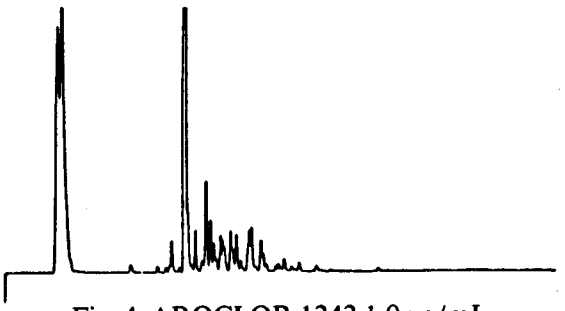

Fig. 4. AROCLOR 1242 1.0 µg/mL.

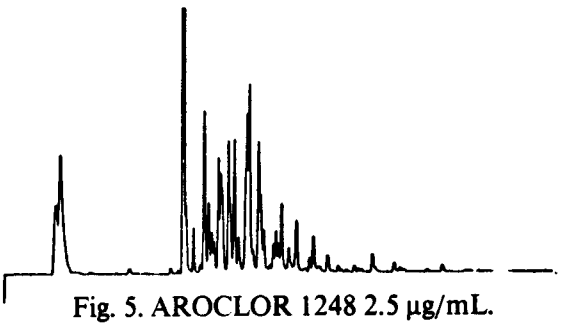

Fig. 5. AROCLOR 1248 2.5 µg/mL.

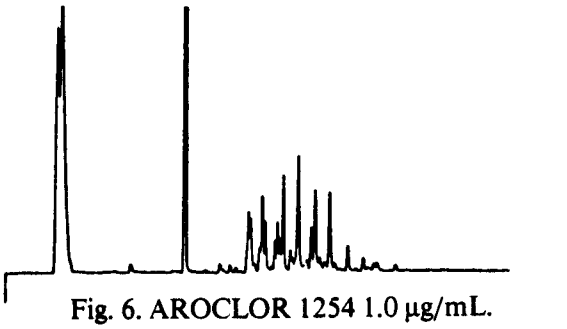

Fig. 6. AROCLOR 1254 1.0 µg/mL.

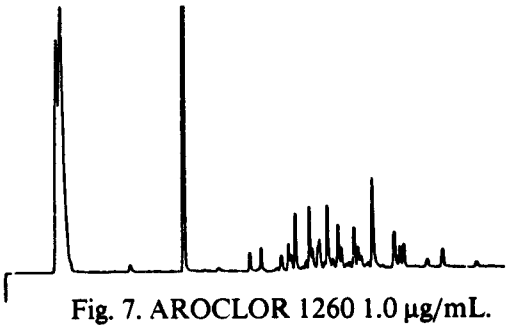

Fig. 7. AROCLOR 1260 1.0 µg/mL.

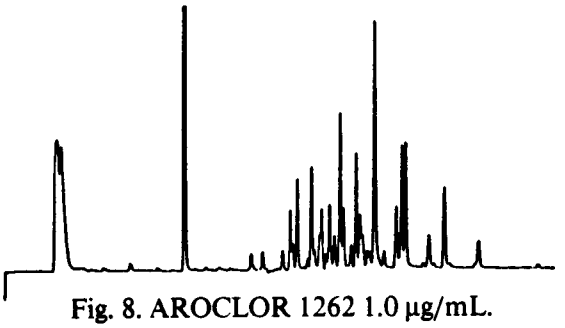

Fig. 8. AROCLOR 1262 1.0 µg/mL.

8.2. The concentrations from each curve of Step 6.4. are then averaged together to give the concentration of the sample.

9. Source Materials

9.1. S. I. Lerman, H. Gordon, and J. P. Hendricks, "Analysis of PCBs in Transformer Oils," *Am. Lab.* **14**, 176 (1982).

9.2. O. Hutzinger, S. Safe, and V. Zitko, *The Chemistry of PCBs* (CRC Press, Inc., Cleveland, Ohio, 1974).

POLYCHLORINATED BIPHENYLS (PCBs) IN OIL - SCREENING BY NAA

Analyte: Polychlorinated Biphenyls (PCBs)	**Method No.:** IH321
Matrix: Oil, nonchlorinated organic solvents	**Minimum Detectable Concentration:** 0.1 μg/g
Procedure: Instrumental thermal neutron activation (ITNA) for total chlorine and calculation of potential PCB	**Authors:** Ernest S. Gladney Carol R. Sutcliffe Dee Seitz George H. Brooks
Effective Date: 10/01/86 to 09/15/92	

1. Principle of Method

1.1. Total chlorine content of oils is measured nondestructively via thermal neutron activation analysis.

1.2. Total chlorine in an oil or nonchlorinated organic matrix may be used as an indication of potential PCB contamination. PCBs are mixtures of conogers produced by chlorinating a biphenyl compound. Table I gives various percent compositions of different commercially prepared Aroclors and the weight percent of chlorine present. This wt % chlorine is used to calculate a potential PCB value from the total chlorine content of the sample as measured by ITNA.

1.3. The most common PCBs in use are Aroclors 1242, 1254, and 1260. Assuming that Aroclor 1242 is the least chlorinated PCB found in the sample, a potential PCB value can be determined by dividing the measured concentration of total chlorine by 0.42. This will give a "conservative" estimate (erring on the side of false positives as opposed to false negatives) because the actual PCB value would be lower for the more highly chlorinated PCBs. When the total chlorine content of the sample is less than 20 ppm, the maximum PCB content is less than the Environmental Protection Agency (EPA) control limit of 50 ppm and the oil may be disposed of without further analysis. If the sample contains other commercial PCB mixtures with lower chlorination levels than Aroclor 1242, the wt % chlorine of the least chlorinated PCB expected should be used to obtain a conservative estimate of potential PCB content.

1.4. The only way to unequivocally establish the presence or absence of PCBs is with gas chromatography with electron capture or mass spectral detection (GC/ECD or GC/MS). Sample dilution is required to protect the sensitive ECD from saturation. The ITNA screening data can help determine initial dilution requirements for the more costly GC/ECD method, greatly reducing the number of samples that need to be rerun because of improper dilution.

1.5. The ITNA procedure is multielement and can simultaneously provide data on the bromine, iodine, and sulfur content of oil. These additional elemental measurements are often required by disposal facilities to meet the specific requirements of their EPA permits.

TABLE I. COMPOSITION OF COMMON AROCLORS

	Wt % Chlorine in Aroclor					
Compound	**1016**	**1221**	**1242**	**1248**	**1254**	**1260**
C12H10	---	11	---	---	---	---
C12H9Cl	1	51	3	---	---	---
C12H8Cl2	20	32	13	2	---	---
C12H7Cl3	57	4	28	18	---	---
C12H6Cl4	21	2	30	40	11	---
C12H5Cl5	1	---	22	36	49	12
C12H4Cl6	---	---	4	4	34	38
C12H3Cl7	---	---	---	---	6	41
C12H2Cl8	---	---	---	---	---	8
C12HCl9	---	---	---	---	---	1

2. Sensitivity

2.1. The ultimate sensitivity is limited primarily by the reproducibility of the system blank. Using the standard 4-mL irradiation container at the Los Alamos Omega West Reactor, a detection limit of 1-2 μg/g chlorine may be obtained without changing the irradiation container after neutron irradiation. A detection limit of 0.1 μg/g is obtained if the oil is transferred to a clean container at the conclusion of the neutron irradiation but before sample counting.

3. Accuracy and Precision

3.1. Accuracy and precision for total chlorine determination in NBS SRM 1818, chlorine in oil, is listed in Table II.

3.2. Accuracy and precision for estimated PCB using total chlorine measurement of different NBS and EPA PCB in oil reference materials is listed in Tables III through VI.

3.3. ITNA screening is **NOT** subject to false positives because of the presence of fluorinated, brominated, or iodinated halocarbons in the oils, as shown in Table VII.

3.4. One hundred and ten unknown samples have been compared by both ITNA screening and GC/ECD. Gas chromatography was assumed to be the reference method in this study. At the EPA regulation level of 50 ppm, 23% of the samples analyzed by ITNA indicated >50 ppm PCB while GC analysis showed these samples to actually be below 50 ppm. The ITNA showed a false negative rate of only 3.6%. The trend was similar at the 500 ppm regulation limit with false positives of 5% for ITNA. There were too few samples analyzed at the 500-ppm limit to adequately evaluate the false negative potential.

TABLE II. ITNA DETERMINATION OF CHLORINE IN NBS SRM 1818

SRM	Chlorine (µg/g) ITNA	Chlorine (µg/g) Certified
1818-I	26.8 ± 1.4	29 ± 5
1818-II	62.2 ± 2.5	63 ± 4
1818-III	79.7 ± 2.8	78 ± 4
1818-IV	226 ± 4	231 ± 6
1818-V	549 ± 16	558 ± 11

TABLE III. ITNA SCREENING OF TRANSFORMER OILS FOR PCB CONTENT

Agency	Aroclor	Cl (µg/g) by ITNA	PCBs (µg/g) Calculated	PCBs (µg/g) Certified
EPA	1016	4.5 ± 0.2	10.7 ± 0.4	10.1
EPA	1016	19.5 ± 0.9	47 ± 2	50.1 ± 11.0
EPA	1016	201 ± 4	478 ± 11	501 ± 100
EPA	1242	5.2 ± 1.3	12.4 ± 3.1	10.1
EPA	1242	20 ± 1	48 ± 3	50.2 ± 7.7
EPA	1242	206 ± 5	490 ± 12	501 ± 55
EPA	1254	6.0 ± 1.4	14.3 ± 3.5	10.0
EPA	1254	24.3 ± 0.7	58 ± 2	50.0 ± 8.2
EPA	1254	263 ± 6	627 ± 14	500 ± 60
EPA	1260	7.2 ± 0.5	17.2 ± 1.1	10.1
EPA	1260	27 ± 3	64 ± 6	50 ± 7
EPA	1260	284 ± 2	677 ± 5	499 ± 60
NBS	1242	41.0 ± 0.7	97 ± 2	100 ± 1
NBS	1260	58 ± 4	138 ± 9	100 ± 3

TABLE IV. ITNA SCREENING OF EPA CAPACITOR OILS FOR PCB CONTENT

Aroclor	Cl (µg/g) by ITNA	PCBs (µg/g) Calculated	PCBs (µg/g) Certified
1016	2.8 ± 0.8	6.6 ± 1.9	11.8
1016	19.9 ± 1.8	48 ± 4	51.2 ± 11
1016	200 ± 1	475 ± 2	507 ± 101
1254	7.1 ± 0.5	16.8 ± 1.3	12.7
1254	25 ± 1	60 ± 3	50 ± 10
1254	259 ± 2	616 ± 4	500 ± 60

TABLE V. ITNA SCREENING OF EPA HYDRAULIC OILS FOR PCB CONTENT

Aroclor	Cl (μg/g) by ITNA	PCBs (μg/g) Calculated	PCBs (μg/g) Certified
1016	52 ± 1	124 ± 4	11.4
1016	76 ± 3	179 ± 6	57.1 ± 12.0
1016	286 ± 6	681 ± 14	576 ± 115
1254	183 ± 5	434 ± 13	11.5
1254	80 ± 3	192 ± 8	57.6 ± 9.0
1260	55 ± 2	131 ± 4	11.7
1260	376 ± 21	894 ± 49	576 ± 67
1260	151 ± 5	360 ± 12	57.4 ± 8.2

TABLE VI. ITNA SCREENING OF NBS MOTOR OILS FOR PCB CONTENT

Aroclor	Cl (μg/g) by ITNA	PCBs (μg/g) Calculated	PCBs (μg/g) Certified
1242	46.2 ± 2.7	108 ± 4	100 ± 1
1260	58.6 ± 2.0	140 ± 5	100 ± 2

TABLE VII. ITNA ANALYSIS OF HALOGEN SPIKES IN OIL (µg/g)

Compound	Element	Calc. Conc. (ppm)	ITNA (ppm)
Fluorobenzene	F	1107	975 ± 200
	Cl	0	<3
	F	115	100 ± 25
	Cl	0	<3
	F	13	10 ± 4
	Cl	0	<3
Fluorobiphenyl	F	882	810 ± 160
	Cl	0	<3
	F	97	70 ± 25
	Cl	0	<3
	F	10	7 ± 4
	Cl	0	<3
Bromobenzene	Br	1489	1280 ± 100
	Cl	0	<3
	Br	104	86 ± 8
	Cl	0	<3
	Br	10.5	8.7 ± 0.8
	Cl	0	<3
2,4-Tribromo-biphenyl	Br	550	540 ± 30
	Cl	0	<3
	Br	91	80 ± 6
	Cl	0	<3
	Br	9.3	8.0 ± 0.9
	Cl	0	<3
Iodobenzene	I	1669	1570 ± 100
	Cl	0	<3
	I	108	96 ± 8
	Cl	0	<3
	I	11	10 ± 1
	Cl	0	<3
Diiodopentane	I	2403	2260 ± 200
	Cl	0	<3
	I	85	80 ± 8
	Cl	0	<3
	I	8.1	7.4 ± 0.8
	Cl	0	<3
Iodopropane	I	1816	1275 ± 90
	Cl	0	<3
	I	83	53 ± 5
	Cl	0	<3
	I	8.5	5.0 ± 0.7
	Cl	0	<3

TABLE VII. ITNA ANALYSIS OF HALOGEN SPIKES IN OIL (μg/g) (cont)

Compound	Element	Calc. Conc. (ppm)	ITNA (ppm)
Combination-I	F	605	350 ± 70
	Cl	658	620 ± 40
	Br	2454	2100 ± 200
	I	1745	1600 ± 200
Combination-II	F	90	---
	Cl	98	100 ± 9
	Br	365	295 ± 30
	I	260	230 ± 20
Combination-III	F	9.2	---
	Cl	10.0	11 ± 3
	Br	37.1	29 ± 3
	I	26.4	24 ± 2

4. Interferences

4.1. This screening method makes no distinction between inorganic and organic chlorine. Aqueous sample matrices that may contain high levels of soluble inorganic chlorine are not adaptable to ITNA screening procedures without first undergoing organic chemical separation.

4.2. Distinction cannot be made between PCBs and other chlorinated organic compounds. All forms of chlorine will be reported as potential PCBs.

4.3. High concentrations of certain metals dissolved or suspended in oil will raise the Compton background in the gamma-ray spectrometer and, thereby, raise the detection limits. Manganese, aluminum, sulfur, sodium, and calcium are the primary activatable elements of concern. There are no direct interferences with the high-energy chlorine gamma ray at 2167 keV.

5. Collection and Storage of Samples

5.1. Collect oil samples, minimum volume of 20 mL, in glass containers with Teflon-lined screw-cap lids.

5.2. Wash sample bottles and lids in a detergent solution and rinse with tap water and distilled water. Allow bottles and lids to dry in an uncontaminated area. Rinse the seals with pesticide-grade hexane and allow to air dry. Bottles can be either heated to 400°C for 15-20 min or rinsed with pesticide-grade hexane or acetone and air dried.

5.3. Store oil samples in a cool, dry, dark area pending analysis. Storage time should not exceed 4 weeks for unknown or undefined matrices.

6. Apparatus

6.1. Nuclear reactor: equipped with pneumatic transfer capability for the thermal column irradiation facility.

6.2. Gamma-ray spectrometer: equipped with a fixed geometry sample holder, Ge(Li) or intrinsic Ge gamma-ray detector, preamplifier, linear amplifier, high-voltage bias supply, and pulse-height analyzer. Additional data storage media (tape, disc, etc.) are desirable but not essential.

6.3. Irradiation vials ("rabbits"): 4-mL, screw-cap, polyethylene, Los Alamos National Laboratory, Los Alamos, New Mexico.

6.4. Beem vials for inserts: size 00, regular tip, Ladd Research, Burlington, Vermont.

6.5. Glass bottles: 100-mL with Teflon-lined screw-cap lids, VWR Scientific.

6.6. Transfer pipettes: glass, disposable.

6.7. Soldering iron: adjustable temperature, Wells EC 2000.

6.8. Electric motor: 10-100 rpm with vial holder for vial sealing.

6.9. Analytical balance: top-loading, 100-g capacity.

6.10. Pipettes: glass, 1- and 2-mL, graduated.

7. Reagents

7.1. Distilled water.

7.2. Sodium chloride or potassium chloride (highest purity available).

7.3. Aroclor standards. Chem Service, West Chester, Pennsylvania.

7.4. Oil. Chlorine-free and showing no interferences by GC/ECD.

7.5. Hexane (pesticide-grade).

8. Calibration and Standards

8.1. There is no need to prepare organic matrix standards because the neutron moderating properties of water and oil are very similar.

8.2. Commercially prepared chloride solutions at concentrations of 100 or 1000 mg/L may be used. A 100 μg/g chloride standard solution is prepared by dissolving 0.165 g NaCl in 1000 mL of high-purity distilled water.

8.3. Preparation of oil-based PCB standards.

8.3.1. Prepare a 5000 μg/mL stock solution of the desired PCB by dissolving 50 mg of the pure PCB in 10 mL of pesticide-grade hexane. Mix well.

8.3.2. Prepare five 50 mL aliquots of blank oil in clean glass bottles with Teflon-lined screw-cap lids. Add 0.0, 0.5, 1.0, 1.5, and 2.0 mL of stock solution to the blank oil, one concentration level per bottle. Obtain total weights. Place bottles in a sonicator at least overnight to assure homogeneous mixing. Mix well before each use.

8.3.3. These standards can be stored for up to 4 months in a cool, dark area.

8.4. Preparation of oil-base organohalogenated standards.

8.4.1. The liquid halogenated compounds in Table VII are directly added to a weighed amount of blank oil, one compound per aliquot of oil. Solid compounds are first weighed into a clean glass vial and dissolved in a known amount of hexane. Weighed amounts of these solutions are then added to weighed amounts of blank oil. Final oil solution weights are obtained in both cases.

8.4.2. Lower concentrations may be prepared by serial dilution of the concentrated oil stock solutions. Weigh a known amount of the concentrated stock and dilute with a weighed amount of blank oil.

8.4.3. Place samples in a sonicator at least overnight to ensure homogeneous mixing. Mix well before each use. These standards can be stored for up to 4 months in a cool, dark area.

8.5. Calibrate the gamma-ray spectrometer daily by running several chloride standards under the same irradiation and counting conditions as those used for the oils. Daily standardization is strongly recommended although the calibration of the system has been stable over a period of several months.

9. Procedure

9.1. Sample packaging for irradiation.

9.1.1. Pipette 1 mL of oil sample into a polyethylene reactor irradiation "rabbit."

9.1.2. Tare a top-loading balance with an empty rabbit and rabbit holder. A scintillation vial without a cap is a good holder to prevent the oil from spilling during weighing.

9.1.3. Weigh the rabbit with the oil sample and record the net weight of the oil in the Laboratory notebook.

9.1.4. Remove the cap from a Beem "00" vial and plug the top of the rabbit by inserting the tapered end of the Beem into the rabbit and pushing it all the way in. The fit should be tight.

9.1.5. Heat seal the Beem plug to the top of the rabbit using a soldering iron set to about 690°F.

9.1.6. Place a polyethylene screw cap on the rabbit and heat seal the cap to the rabbit body with the soldering iron while rotating the vial holder.

9.2. Sample irradiation and counting.

9.2.1. Irradiate the sample in one of the pneumatic transfer, thermal neutron facilities of the Los Alamos Omega West Reactor for 1 min. The highest available neutron flux is preferred to maintain the best detection limits. Record neutron flux read-out on the irradiation counter/timer system.

9.2.2. Wipe the outside of the sample vial to remove surface radioactive contamination.

9.2.3. Transfer the vial to slot No. 2 of the constant geometry apparatus in front of the Ge(Li) gamma-ray detector. Briefly count the sample on the multichannel analyzer (MCA) to determine dead time. If dead time exceeds 10%, move the sample further back in the holder until a dead time of less than 10% is achieved. Record the geometry setting in the notebook. Be sure to erase MCA memory.

9.2.4. Count the sample for 200 s, beginning at 2 min total decay time.

9.2.5. Transfer the data to magnetic tape or disc for off-line data reduction. If these storage media are unavailable, integrate the 2167 keV Cl-38 line manually on the CRT display of the MCA and record this peak area information in the notebook.

9.2.6. Repeat Steps 9.2.1. through 9.2.5. for each sample. Each day run at least three blanks and three chloride standards in each counting geometry used.

10. Operation of Equipment

10.1. See the gamma-ray spectrometry instrument procedure.

11. Calculations

11.1. Determine PCB standard concentration using the following equation:

$$PCB = \frac{AS \times CS}{W} ,$$

where AS = amount of stock solution added (mL),

CS = concentration of stock solution (μg/mL), and

W = total weight of standard.

11.2. Determine chlorine content of the standards using the following equation:

$$Cl = PCB \times W_1 \times C ,$$

where PCB = value calculated in Step 11.1.,

W_1 = sample weight (g), and

C = wt % chlorine in Aroclor used.

11.3. Total chlorine content of the sample is determined using the following equation:

$$Cl = \frac{(A - B) \times C}{(D - B) \times E} ,$$

where A = gross peak area of sample,

B = gross peak area of blank,

C = weight of chlorine in standard (μg),

D = gross peak area of standard, and

E = sample weight (g).

11.4. Potential PCB in the sample is calculated by dividing the result from Step 11.1. by 0.42 (the chlorine concentration in percent of the least chlorinated PCB present in common oil mixtures).

$$\text{Potential PCB} = \frac{Cl}{0.42} .$$

11.5. If the potential PCB value is less than the EPA concern level of 50 ppm, the oil may be disposed of in an unregulated facility. If the potential PCB value exceeds 50 ppm, GC/ECD analysis is required to determine the actual composition of the sample and disposal requirements. This approach is conservative because, if the PCB mixture is one of the more chlorinated varieties, the actual PCB content will be even less than that calculated. This relationship is shown in Table VIII.

TABLE VIII. RELATIONSHIP BETWEEN PCB AND CHLORINE CONTENT OF VARIOUS PCB MIXTURES

Aroclor Mixture	Wt % Chlorine	Potential PCB Concentrations (ppm) at 20 ppm Chlorine
1016	41	48.8
1242	42	47.6
1254	54	37.0
1260	60	33.3
1262	62	32.2

11.6. The halogen concentration of the organohalogen compounds dissolved in oil is calculated as follows:

$$X_1 = \frac{XW \times P \times 10^6}{TW} ,$$

where X_1 = concentration of halogen in oil (μg/g),

XW = weight of halogen compound added to blank oil (g),

P = wt % of halogen present in halogenated compound, and

TW = total weight of oil plus compound.

Concentrations in dilutions are calculated as follows:

$$X_2 = \frac{WX_1 \times X_1}{TW} ,$$

where X_2 = concentration of halogen in diluted standard (μg/g),

WX_1 = weight of concentrated standard used (g),

X_1 = concentration of concentrated standard (μg/g), and

TW = total weight of new diluted standard (g).

12. Source Materials

12.1. E. S. Gladney, D. B. Curtis, D. R. Perrin, J. W. Owens, and W. E. Goode, "Nuclear Techniques for the Chemical Analysis of Environmental Materials," Los Alamos Scientific Laboratory report LA-8192-MS (January 1980).

12.2. O. Hutzinger, S. Safe, and V. Zitko, *The Chemistry of PCBs* (CRC Press, Inc., Cleveland, Ohio, 1974).

12.3. M. D. Erickson, *Analytical Chemistry of PCBs* (Butterworth Publishers, Stoneham, Massachusetts, 1986).

12.4. U.S. Environmental Protection Agency, "Test Methods for Evaluating Solid Waste," *Physical/Chemical Methods,* 2nd ed., SW-846 (July 1982), Method Nos. 608 and 625.

12.5. Federal Register, Vol. 44, No.106, Thursday, May 31, 1979, Rules and Regulations, Part VI, Environmental Protection Agency, Polychlorinated Biphenyls; Criteria Modification; Hearings, pp. 31514-31568.

POLYNUCLEAR AROMATIC HYDROCARBONS IN AIR
HIGH-PERFORMANCE LIQUID CHROMATOGRAPHY

Analyte: Polynuclear Aromatic Hydrocarbons	**Method No.:** IH330
Matrix: Air	**Detection Limit:** Varies with compound
Procedure: Adsorption on filters or Tenax-GC solid sorbent; desorption with cyclohexane; analysis by high-performance liquid chromatography	**Precision:** 10% RSD
Effective Date: 12/07/82	**Author:** Ruth Sherman

1. Principle of Method

1.1. A known volume of air is pumped through a filter train consisting of a 47-mm glass fiber and a 47-mm silver membrane, followed by a glass tube containing two sections of Tenax-GC solid sorbent separated by glass wool.

1.2. The samples and standards are desorbed with cyclohexane.

1.3. After the sample is filtered, an aliquot of internal standard is added for quantitative high-performance liquid chromatography (HPLC) analysis.

1.4. Peak areas and retention times of the samples are compared to those of standards.

2. Disadvantage of Method

2.1. Absolute certainty of identification is not possible because other compounds could have similar retention times. This problem is mitigated by the use of two variable wavelength detectors set at two different wavelengths.

3. Apparatus

3.1. Test tubes: 15-mL.

3.2. Centrifuge tubes: 15-mL.

3.3. Buchner funnels: fine frit, 15-mL.

3.4. Sample vials: 3-mL.

3.5. Pipettes: Eppendorf.

3.6. Volumetric flasks: 10-mL.

3.7. Teflon cups: 1-mL, Cahn Instruments.

3.8. Teflon cup holder.

3.9. Vacuum oven: Fisher Isotemp, Model 281, Fisher Scientific Company, Pittsburgh, Pennsylvania.

3.10. Microbalance: Mettler, Model M-5, Mettler Instrument Corp., Highstown, New Jersey.

3.11. Balance: Voland, Jupiter 1000 or equivalent capable of 0.1 mg resolution, Voland Corporation, Hawthorne, New York.

3.12. Ultrasonic cleaner: Branson B224, Shelton, Connecticut.

3.13. Centrifuge: IEC Clinical, Needham Heights, Massachusetts.

3.14. Liquid chromatograph: Model 6000, Waters Associates, Milford, Massachusetts.

3.15. μ-BONDPAK C_{18} column: Waters Associates.

3.16. Two variable wavelength detectors: Chromonitor 785, Micrometrics Instrument Corp., Norcross, Georgia.

3.17. Two digital integrators: Minigrator, Spectra-Physics Corp., Santa Clara, California.

3.18. Two filters and amplifiers: Model No. 1021A, Spectrum, Newark, Delaware.

3.19. Two strip chart recorders: Model 8377-10, Cole-Parmer Instrument Company, Chicago, Illinois.

3.20. Microliter syringes: Hamilton Company, Reno, Nevada.

3.21. Vacuum filtering system with 0.45-μ filters: Rainin Instrument Company, Inc., Woburn, Massachusetts.

4. Reagents

4.1. Cyclohexane (distilled in glass). Burdick-Jackson, Inc., Muskegon, Michigan.

4.2. Acetonitrile (distilled in glass). Burdick-Jackson, Inc., Muskegon, Michigan. Filter through 0.45-μ Nylon-66 filters, Rainin Instrument Company, Inc., Woburn, Massachusetts.

4.3. Distilled water. Filter through 0.45-μ Nylon-66 filters, Rainin Instrument Company, Inc.

4.4. Acetophenone. Eastman Kodak Company, Rochester, New York.

4.5. Nitrogen (prepurified).

5. Calibration and Standards

5.1. Dilute acetophenone in acetonitrile to 1 ppm for the internal standard.

5.2. Weigh 1 mg of each of the following compounds on a Mettler balance and place into separate 10-mL volumetric flasks:

- Acenaphthene - Eastman Kodak Company, Rochester, New York.
- Acenaphthylene (99%) - Chem Services, West Chester, Pennsylvania.
- Anthracene (99.9%) - Aldrich Chemical Company, Milwaukee, Wisconsin.
- Benzo(b)fluoranthene (99%) - Chem Services, West Chester, Pennsylvania.
- Benzo(k)fluoranthene (99%) - Chem Services, West Chester, Pennsylvania.
- Benzo(ghi)perylene - Aldrich Chemical Company, Milwaukee, Wisconsin.
- Benzo(a)pyrene (99.9%) - Aldrich Chemical Company, Milwaukee, Wisconsin.
- Benzo(e)pyrene (99%) - Aldrich Chemical Company, Milwaukee, Wisconsin.
- Carbazole - Analabs, Inc., Foxboro Analabs, Foxboro, Massachusetts.
- Chrysene (95%) - Aldrich Chemical Company, Milwaukee, Wisconsin.
- Coronene - Aldrich Chemical Company, Milwaukee, Wisconsin.
- Fluoranthene (99.9%) - Aldrich Chemical Company, Milwaukee, Wisconsin.
- Fluorene (98%) - Aldrich Chemical Company, Milwaukee, Wisconsin.
- Indeno(1.2.3-c.d)pyrene (99%) - Chem Services, West Chester, Pennsylvania.
- Naphthalene - Eastman Kodak Company, Rochester, New York.
- Perylene (99%) - Aldrich Chemical Company, Milwaukee. Wisconsin.
- Phenanthrene (98+%) - Aldrich Chemical Company, Milwaukee, Wisconsin.
- Pyrene (99.9%) - Aldrich Chemical Company, Milwaukee, Wisconsin.

5.3. Bring the standards to volume with acetonitrile to make a 100 ppm W/V solution of each compound.

5.4. Sonicate for 30 min.

5.5. Place 1 mL of each solution in a 100-mL flask. Bring to volume with acetonitrile to make a 1 ppm solution of each compound.

5.6. Cover with aluminum foil and store at 6°C.

6. Procedure

6.1. Preparation of filters for sampling.

6.1.1. Before sampling, dry the filters in a desiccator at room temperature over silica gel for 24 h.

6.1.2. Weigh the filters to the nearest μg. Weighing is critical because the amounts being weighed are very close to the background of instrument variation (10-20 μg).

6.1.3. Steps 6.1.1. and 6.1.2. are repeated after sampling. The difference in these numbers gives the total particulate per filter.

6.1.4. Each filter is folded and placed in a test tube.

6.1.5. Add 5 mL of cyclohexane to each filter.

6.1.6. Place a blank filter in a test tube.

6.1.7. Add 5 mL of standard PAH solution from Step 5.5. to the blank filter.

6.1.8. Sonicate all test tubes for 5 min.

6.1.9. Decant each solution through individual Buchner funnels under nitrogen pressure into preweighed vials.

6.1.10. Pipette 1 mL of solution from each vial with a 1000-μL Eppendorf pipette and place into 1-mL Teflon cups that are in numbered slots in a Teflon holder. The cups are preweighed according to standard procedure.

6.1.11. Place the cups and holder in a vacuum oven for 2 h at 40°C under vacuum.

6.1.12. Remove the samples from the oven, cover, place in a desiccator, and let stabilize at room temperature for at least 1 h.

6.1.13. Reweigh the cups to determine cyclohexane soluble residue weight.

6.1.14. Reweigh the sampling vials to determine the volume of solution before desiccation.

6.1.15. Place the vials in the vacuum desiccator for 16 h at room temperature, under vacuum.

6.1.16. Remove the vials, seal, cover with aluminum foil and store at 6°C.

6.2. Preparation of Tenax-GC samples.

6.2.1. Removal of Tenax-GC from sampling tubes.

6.2.1.1. Place the screen, glass wool, Tenax-GC, and middle section of glass wool, all from the foresection of the sampling tube, into one centrifuge tube.

6.2.1.2. Place the Tenax-GC, glass wool, and screen, all from the back section of the sampling tube, into another centrifuge tube.

6.2.1.3. Place 0.72 g of blank Tenax-GC into another centrifuge tube.

6.2.2. Add 10 mL of cyclohexane to each tube.

6.2.3. Add 10 mL of PAH standard to the blank tube in Step 6.2.1.3.

6.2.4. Sonicate the tubes for 5 min.

6.2.5. Centrifuge the tubes for 5 min.

6.2.6. Continue with Steps 6.1.9. through 6.1.16.

6.3. Analysis of samples.

6.3.1. Dissolve all samples in 100 µL of 1 ppm acetophenone in acetonitrile.

6.3.2. Dissolve all standards in 2 mL of 1 ppm acetophenone in acetonitrile or reconstitute the standards to the amount of solution present before desiccation.

6.3.3. Sonicate all samples and standards for 5 min.

6.3.4. HPLC operating conditions:

- Sample injection, 10 µL.
- Mobile phase, gradient of 60-100% acetonitrile with water.
- Gradient curvature, concave (set at 8).
- Gradient run time, 15 min.
- Flow rate, 2 mL/min.
- Ambient temperature.
- UV, 254 nm and 280 nm.
- Sensitivity, 0.01 AUFS (absorbance units full scale).
- Chart rate, 2 cm/min.

6.3.5. Inject and run the PAH standard.

6.3.6. Inject and run each sample in duplicate.

6.3.7. Flush the injection valve after each run.

6.3.8. Repeat Steps 6.3.5. and 6.3.7. for the rest of the samples.

7. Calculations

7.1. Desorption efficiency is automatically calculated into the final result because all calculations compare the average sample result to the average standard result for each compound being analyzed.

7.2. Calculations are based on integrated areas of peaks that appear at the same retention time as those of the standard.

7.3. Peak ratios of standards and samples at 280 and 254 nm are determined.

7.4. Results are reported as μg/sample and are based on the following ratios:

$$\frac{W_s}{W_i} = \frac{KA_s}{A_i} \text{ ; therefore, } K = \frac{W_s A_i}{W_i A_s} \text{ ;}$$

$$\frac{W_u}{W_i} = \frac{KA_u}{A_i} \text{ ; therefore, } W_u = \frac{KA_u A_i}{A_i} \text{ ,}$$

where W_s = weight of standard in standard solution,

W_i = weight of internal standard (benzophenone),

K = proportionality constant,

A_s = area of response from standard,

A_i = area of response from internal standard,

W_u = weight of material in unknown, and

A_u = area of response from unknown.

8. Source Materials

8.1. "Benzene-Soluble Compounds in Air," NIOSH, Physical and Chemical Analysis Branch, Method No.: P & CAM 217, National Institute for Occupational Safety and Health, Cincinnati, Ohio (1976).

8.2. "Polynuclear Aromatic Hydrocarbons in Air," NIOSH, Physical and Chemical Analysis Branch, Method No.: P & CAM 184, National Institute for Occupational Safety and Health, Cincinnati, Ohio (1976).

8.3. P. L. Lowry and M. I. Tillery, "Filter Weight Stability Evaluation," Los Alamos Scientific Laboratory Report LA-8061-MS (October 1979).

8.4. A. Bjorseth, O. Bjorseth and P. E. Fjelstad, "Polycyclic Aromatic Hydrocarbon (PAH) in Working Atmospheres, II. Determination of the PAH-Content in a Coke Plant," to be published in *Scand. J. Work Environ. and Health.*

POLYNUCLEAR AROMATIC HYDROCARBONS IN AIR-GAS CHROMATOGRAPHY

Analyte: Polynuclear Aromatic Hydrocarbons (PAHs)	**Method No.:** IH340
Matrix: Air	**Detection Limit:** Varies with compound, see Table I
Procedure: Adsorption on filters or Tenax-GC solid sorbent; desorption with cyclohexane; analysis by gas chromatography with mass selective detection	**Precision:** ± 10% RSD
Effective Date: 12/07/82	**Author:** Stuart Nielsen

SAFETY NOTE: Before beginning this procedure, read all of the Material Safety Data Sheets for the chemicals listed in Sec. 5. Read Sec. 4.3 of the EM-9 Safety Manual for information on personal protective clothing and equipment. Read Sec. 9 of this procedure and Source Material 10.2 for proper waste disposal practices.

1. Principle of Method

1.1. A known volume of air at an average flow rate of 2.0 L/min is pumped through a filter train consisting of a 2.0-μ pore size, 37-mm-diam PTFE filter with a cellulose supporting backup pad in a three-piece polystyrene cassette. The cassette is backed up with an XAD-2 tube (Supelco ORBO-43 or equivalent) with a 100-mg front section and a 50-mg backup section.

1.2. The filters and the XAD-2 are desorbed with cyclohexane. The extracts are examined by gas chromatography with a capillary column and a mass-selective detector.

2. Precision and Detection Limits

2.1. Precision of the analytical method was determined to be ±10% by averaging the standard deviations of representative polynuclear aromatic hydrocarbons run as quality assurance samples.

2.2. Minimum detection limits vary for different analytes and are shown in Table I.

TABLE I. SELECTED COMPOUNDS FOR GAS CHROMATOGRAPHY

Analyte	Retention time (min)	Minimum detection limit per sample (μg)
Indan	9.3	.4
Indene	9.5	.3
Durene	11.3	.3
Naphthalene	13.7	.3
Quinoline	15.3	.4
Isoquinoline	16.1	.7
2-Methylnaphthalene	17.3	.3
1-Methylnaphthalene, Acenaphthene and Azulene	17.9	.4
1,1′-Biphenyl	20.0	.3
1- and 2-Ethylnaphthalene	20.6	.3
Perhydrofluorene and 2,6-Dimethylnaphthalene	21.0	.4
1,3-Dimethylnaphthalene	21.5	.4
2,3-Dimethylnaphthalene	22.2	.4
1,5-Dimethylnaphthalene and 2-Methylbiphenyl	22.4	.4
2,7-Dimethylnaphthalene	22.6	.4
1,2-Dimethylnaphthalene and Acenaphthene	22.8	.3
1,8-Dimethylnaphthalene	23.5	.3
1,4-Dimethylnaphthalene and 4-Methylbiphenyl	23.9	.4
Fluorene	27.1	.4
9,10-Dihydroanthracene	30.0	.3
Perhydropyrene	32.7	.6
Phenanthrene	33.3	.3
Anthracene	33.6	.3
Acridine	33.9	.5
Phenanthridine	34.6	.4
Carbazole	34.7	.4
1-Phenylnaphthalene	35.3	.3
2-Methylanthracene	37.0	.7
9-Methylanthracene	38.5	.3
Fluoranthene	41.3	.3
Pyrene	42.8	.3
9,10-Dimethylanthracene	43.1	1.0

TABLE I. SELECTED COMPOUNDS FOR GAS CHROMATOGRAPHY

Analyte	Retention time (min)	Minimum detection limit per sample (μg)
1,2-Benzofluorene	45.1	.3
2,3-Benzofluorene	45.5	.4
9-Phenylanthracene	49.8	.3
Perylene	50.9	.4
Chrysene and Triphenylene	51.1	.3
Benzo(b)fluoranthene	58.9	.4
Benzo(k)fluoranthene	60.0	.4
Benzo(e)pyrene	61.2	.4
Benzo(a)pyrene	61.6	.5
1,2-Benzanthracene	62.4	.4
3-Methylcholanthracene	65.2	.4
9,10-Diphenylanthracene	66.7	.4
1,2:3,4- and 1,2:5,6-Dibenzanthracene	73.8	.3
Benzo(ghi)perylene	77.1	.5

Note: Actual retention times will vary with individual columns and column age.

3. Interferences

3.1. Any compound with the same retention time as one of the polynuclear aromatic hydrocarbons (PAH) of interest could interfere. Extraction solvent blanks should be run before the extractions to check for interferences.

3.1.1. This interference may be overcome by changing the GC operating conditions and/or selecting another column.

3.1.2. Retention time data on a single column cannot be considered conclusive proof of chemical identity. Use the mass spectrum of the peak in question to confirm the identity of the compound. A sample of bulk mixture can be submitted at the same time as the sample tubes so that chemical identification of possible interferences can be made.

4. Apparatus

4.1. Sampling pump.

4.2. Three-piece polystyrene cassette: Supelco, Bellefonte, Pennsylvania, or equivalent.

4.3. Zefluor^R (PTFE) filter: 2.0-μ pore size and 37-mm diam, Supelco, Bellefonte, Pennsylvania, or equivalent.

4.4. Millipore cellulosic support pad: 37-mm, Supelco, Bellefonte, Pennsylvania, or equivalent.

4.5. ORBO-43 sorbent tube: glass, 100 mg of XAD-2 in front section and 50 mg in backup section, Supelco, Bellefonte, PA, or equivalent.

4.6. Gas chromatograph: Hewlett-Packard Model 5890 with mass-selective detector, or equivalent.

4.7. Fused-silica capillary column: 50-m by 0.31-mm, crosslinked 5% phenylmethylsilicone liquid phase.

4.8. Vials: 20-mL, scintillation, with Teflon-lined caps.

4.9. Microliter syringe: 10- and 100-μL.

4.10. Volumetric flasks: 1- and 10-mL.

4.11. Glass pipettes: 1- and 3-mL.

4.12. Balance: capable of 0.1 mg resolution.

4.13. Tweezers.

4.14. File.

4.15. Autosampler vials: 1-mL, amber, Hewlett Packard, Albuquerque, NM.

4.16. Ultrasonic cleaner: Branson B224, Shelton, CT.

5. Reagents

5.1. Cyclohexane (pesticide-grade). Burdick & Jackson, Muskegon, MI, or equivalent.

5.2. 2,2′-Binaphthyl. Chem Services, Inc., West Chester, PA.

5.3. PAH standards. Appropriate to PAH-containing matrix sampled. If possible, obtain commercially prepared solutions containing 100 μg/mL (mg/L) of the PAH.

6. Calibration and Standards

6.1. Check the purity of standards used by injecting 1.0 μL of 100 μg/mL solutions into the gas chromatograph using conditions listed in Step 7.2.1. Obtain percent purities from the chromatograms.

6.2. Internal standard solution.

6.2.1. Weigh out 20 mg of 2,2′-binaphthyl into a 10-mL volumetric flask. Fill to volume with cyclohexane. This 2000 mg/L solution is used to spike all standards and samples.

6.2.2. Stopper the flasks, wrap the top with parafilm, and store in the refrigerator when not in use. Solution is good for several months.

6.3. Composite standards.

6.3.1. Prepare appropriate composite standards to run with each batch of samples or use commercial mixes of the PAHs at the proper concentrations.

6.3.2. To make up the composite standards, add the following amounts of 100 μg/mL PAH standards to the receiving flask of a Kuderna-Danish concentrator.

Volume of 100 μg/mL standard	Concentration (μg/mL)
200 μL	20.0
100 μL	10.0
50 μL	5.0
10 μL	1.0

6.3.3. Concentrate each of these solutions to 1 mL.

6.3.4. Spike 10 μL of the 2000 mg/L binaphthyl solution into each standard.

6.4. Calibration and retention times.

6.4.1. Analyze each PAH of interest in the range given in Steps 6.3.2. to 6.3.4.

6.4.2. Prepare a standard curve for each PAH. Plot the data on linear graph paper with concentration in μg/mL on the x-axis and the area of the PAH peak divided by the area of the binaphthyl peak on the y-axis.

7. Procedure

7.1. Sample Preparation.

7.1.1. Filters.

7.1.1.1. Immediately after sampling, the filters should have been carefully transferred to scintillation vials and the vials wrapped in aluminum foil. This is necessary to avoid loss of analytes due to sublimation and/or degradation by UV light.

7.1.1.2. Add 5.0 mL of cyclohexane to each scintillation vial. Start media and reagent blanks at this step.

7.1.1.3. Cap and let sit 15 to 20 min in an ultrasonic bath.

7.1.1.4. Transfer 1.0 mL of the extracts to autosampler vials and cap.

7.1.2. Tubes.

7.1.2.1. Score each tube with a file and break near the top of the glass wool in the first section. Place glass wool and sorbent from the front section into an autosampler vial.

7.1.2.2. Remove the middle glass wool plug, the back section of sorbent, and the retaining plug of glass wool and place in a second vial.

7.1.2.3. Add 1 mL of cyclohexane to each vial. Shake for at least 1/2 h.

7.1.2.4. Add 10 μL of the binaphthyl solution.

7.2 Analysis.

7.2.1. Set up the GC/MSD to use the following conditions:

- 5% phenylmethylsilicone fused-silica capillary column, 50 m by 0.31 mm.
- Helium carrier gas, 1-2 mL/min.

- Injection port temperature, 330°C.
- Detector temperature, 370°C.
- Column temperature, 120°C for 4 min, then programmed to 310°C at 4°/min. Hold at 310°C for 40 min.
- 3 μL splitless injection with a 0.55-min delay.

7.2.2. If the sample is too concentrated, dilute it further to bring it into the range of the calibration curve.

7.2.3. Compare the chromatogram of the sample to that of the standards. Use retention times to determine a match and confirm the match by examination of the mass spectra of the corresponding peaks.

8. Calculations

8.1. Read the concentration of each analyte observed in each sample solution from the appropriate standard curve.

8.2. Multiply the concentrations in μg/mL of the analytes observed in each sample solution by the total volume of the appropriate sample solution to calculate the weight of each analyte present in each sample. Make corrections for the blank if necessary.

8.3. Calculate the air concentration of PAH.

$$C = \frac{W_f + W_b}{V} ,$$

where C = air concentration of PAH (mg/L),
W_f = weight of PAH on front section of tube,
W_b = weight of PAH on back section of tube, and
V = volume of air samples (L).

9. Proper Waste Disposal Practices

9.1. Solid waste.

9.1.1. Accumulate solid waste, such as paper wipes and glass Pasteur pipettes contaminated with organic compounds, in a covered metal can lined with a plastic bag and keep segregated from solid waste that is not contaminated with organic compounds.

9.1.2. Label the can with a hazardous waste label suitable for waste contaminated with these types of organic compounds.

9.1.3. Open the can only for the period of time necessary to add waste.

9.1.4. When the plastic bag is full, seal it with tape, remove it from the can, identify it as waste contaminated with organic compounds, and place it in a functioning chemical exhaust hood pending pickup by the Waste Management group.

9.1.5. Place a new plastic bag into the waste can for continued use.

9.2. Liquid waste.

9.2.1. Accumulate liquid organic wastes, such as rinses of syringes and Pasteur pipettes, in a covered metal can in a secondary containment tray.

9.2.2. Label the can with a hazardous waste label suitable for this type of waste.

9.2.3. When the can is full, cover it and keep it in the secondary containment tray pending pickup by the Waste Management group.

9.2.4. Label a new can for future use.

9.3. Excess sample extracts and standard solutions.

9.3.1. Accumulate autosampler vials containing excess sample extracts and standard solutions in a glass jar in a secondary containment tray.

9.3.2. Label the jar with a hazardous waste label suitable for this type of waste.

9.3.3. Open the jar only for the period of time necessary to add the vials.

9.3.4. When the jar is full, keep it in the secondary containment tray pending pickup by the Waste Management group.

9.3.5. Label a new glass jar for future use.

9.4. Waste pickup.

9.4.1. Request pickup by the Waste Management group of a full bag, can, or glass jar of waste using the current Chemical Waste Disposal Request Form. The current Waste Profile Request Form (WPRF) that describes the waste is referenced on the Chemical Waste Disposal Request Form.

9.4.2. The Waste Management group picks up the waste for disposal according to Laboratory policy.

10. Source Materials

10.1. "Polynuclear Aromatic Hydrocarbons," NIOSH Manual of Analytical Methods, Third Edition, Method No.: 5515, issued 5/15/85, National Institute for Occupational Safety and Health, Cincinnati, OH.

10.2. "Chemical, Hazardous, and Mixed Waste," Administrative Requirement 10-3, in *Environment, Safety, and Health Manual*, Los Alamos National Laboratory Manual, Chapter 1 (most recent edition).

Revisions or additions to the procedure are marked (▒). Where a section heading is marked, the entire section has been revised.

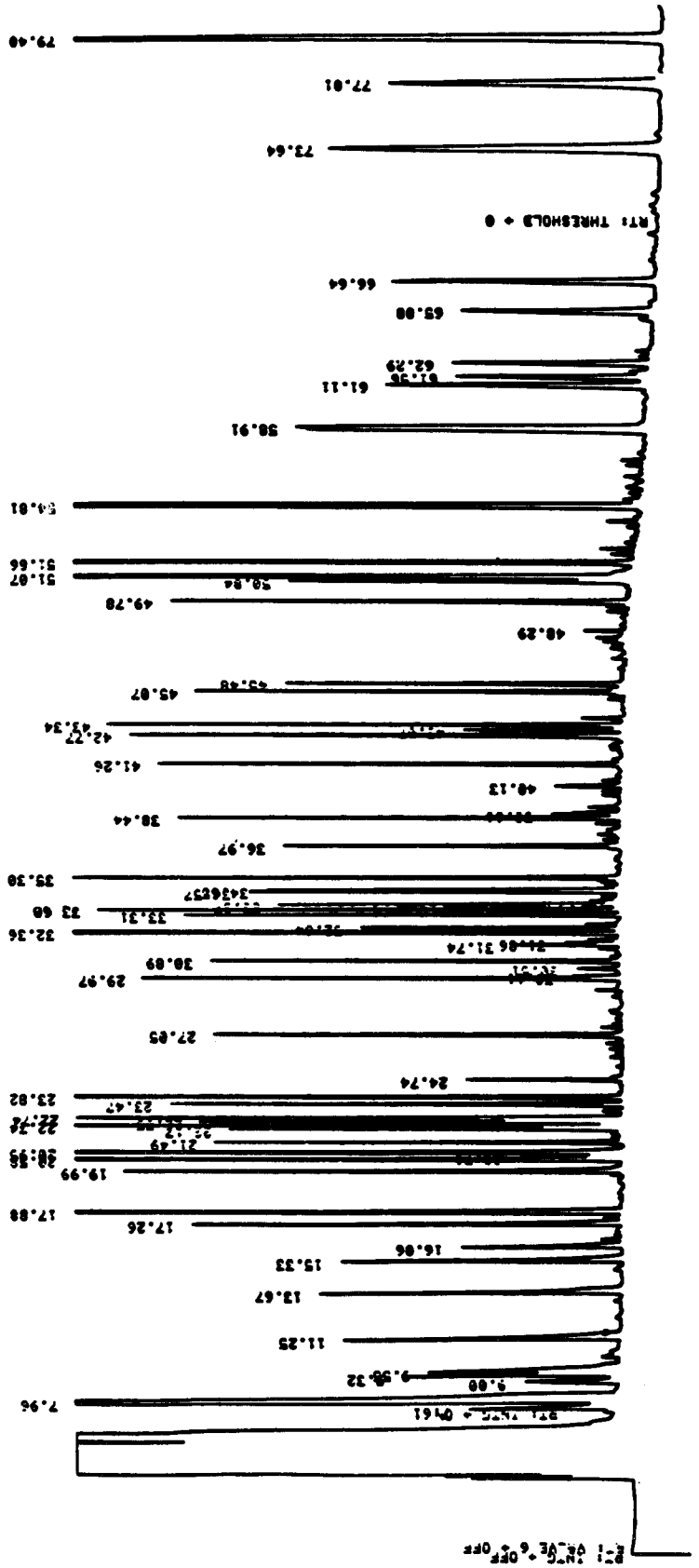

Fig. 1. PAH standard mix (2.5 µg/mL).

ATTACHMENT 1
HP 5880 PROGRAM

```
10   REM KOVATS INDICES IDENTIFICATION PRGM
20   OPTION BASE 1
30   DIM A(40)
31   P=55
32   A1=10
33   D=8
34   F=5
40   REPORT ON
50   PRINT TAB(20);"INJECTION OF CALIB SAMPLE"
60   PRINT TAB(19);"---------------------------"
70   PRINT
71   PRINT
90   AREA%
93   GET RUN TBL "KOVAT1" DEVICE# 6
94   WAIT
96   VALVE 6 ON
98   THRESHOLD 2
100  START AUTO SEQ 36,36
110  DELETE CALIB
115  GET CALIB "KOVAT1" DEVICE# 6
120  ESTD
130  RECALIB
140  N=#PEAKS
150  FOR S=1 TO #PEAKS
160  A(S)=RT(S)
170  NEXT S
300  FOR I=0 TO 6
302  GET RUN TBL "PAH 1" DEVICE# 6
304  GET CALIB "PAH 2" DEVICE# 6
310  FOR J=1 TO 5
320  PRINT
330  PRINT
340  PRINT
350  PRINT TAB(20);"ANALYSIS:  ";5*I+J
360  PRINT TAB(19);"---------------"
370  PRINT
372  ISTD
376  VALVE 6 ON
378  THRESHOLD 2
380  START AUTO SEQ 5*I+J,5*I+J
385  LIST REPORT AREA%
390  PRINT
400  PRINT TAB(21);"KOV.IND.";TAB(29);"CALCULD";
410  PRINT TAB(5);"NAME";TAB(13);"RET.TME";
420  PRINT TAB(21);"IN RUN";TAB(29);"KOV.IND";
430  PRINT TAB(37);"AMOUNT"
440  PRINT TAB(2);"----------";TAB(13);"-------";
450  PRINT TAB(21);"-------";TAB(29);"-------";TAB(37);"------"
```

```
460  AREA%
470  GOSUB 680
480  NEXT J
490  PRINT
500  PRINT
510  PRINT
520  PRINT TAB(20);"INJECTION TO RECALIB"
530  PRINT TAB(10);"----------------------"
540  PRINT
543  GET RUN TBL "KOVAT1" DEVICE# 6
544  WAIT
546  VALVE 6 ON
548  THRESHOLD 2
550  START AUTO SEQ 36,36
560  DELETE CALIB
565  GET CALIB "KOVAT1" DEVICE# 6
570  ESTD
572  RECALIB
580  N=#PEAKS
590  FOR S=1 TO N
600  A(S)=RT(S)
610  NEXT S
620  NEXT I
630  PRINT "REFILL YOUR SAMPLE TRAY !!!!"
640  PRINT "TO RESTART ENTER: RESUME 300"
650  PRINT "                  ----------"
660  PRINT
670  STOP
680  A=A1
690  FOR K=1 TO N-1
700  X1=A(K)
710  X2=A(K+1)
720  GOSUB 760
730  A=A+D
740  NEXT K
750  RETURN
760  AREA%
770  FOR L=1 TO #PEAKS
780  IF RT(L)<X1 THEN 820
790  IF RT(L)=X1 THEN 810
800  IF RT(L)>=X2 THEN 840
810  GOSUB 880
820  NEXT L
830  GOTO 870
840  IF RT(L)=A(N) THEN 862
850  GOTO 870
860  GOSUB 990
862  A=A+D
```

```
864  GOTO 810
870  RETURN
880  Z=100*A+100*D*(RT(L)-X1)/(X2-X1)
900  FOR M=1 TO P
910  READ B$,B
920  IF Z<B-F THEN 950
930  IF Z>B+F THEN 950
940  GOSUB 1010
950  NEXT M
960  RESTORE
970  RETURN
1010 PRINT USING 1030;B$,RT(L),Z,B,AMT(L)
1020 RETURN
1030 IMAGE X,10A,DDZ.DDD,2(X,DDDD.DD),X,DDZ.DD
1040 IMAGE 11X,DDZ.DDD,X,DDDD.DD,9X,DDZ.DD
1050 DATA C10,1000.00,246TMPY,1031.57,INDAN,1044.52
1060 DATA INDENE,1051.86,DURENE,1107.72,1MIND,1146.36
1070 DATA NAPH,1187.10,QUIN,1241.33,ISOQUIN,1265.63
1080 DATA 2MNA,1304.43,1MN-ACE-AZ,1324.88,BPH,1393.87
1090 DATA 1&2ETNA,1415.50,PEHFL-26DMN,1425.43,13DMN-2MBP,1443.42
1100 DATA 23DMN,1465.62,15DMN+,1471.01,27DMN,1477.78
1110 DATA 12DMN-ACEY,1485.28,18DMN,1508.30,14DMN-4MBP,1519.81
1120 DATA FL,1625.72,910DHAN,1721.74,1MFL-910DHPH,1739.33
1130 DATA C18,1800.00,PEHPY,1811.74,PHEN,1839.05
1140 DATA ANTH,1851.08,ACRID,1862.37,PHEND,1891.12
1150 DATA CARB,1894.19,1PHNA,1920.88,2MAN,1989.74
1160 DATA 1MPHEN,2009.37,9MAN,2050.15,FLUOR,2165.78
1170 DATA PY,2227.74,910DMAN,2241.14,12BZFL,2322.22
1180 DATA 23BZFL,2338.89,9PHAN,2515.62,PERY,2559.31
1190 DATA CHR-TPH,2568.46,C26,2600.00,8INAPH,2685.76
1200 DATA BZBFLU,2801.66,BZKFLU,2806.1,BZEPY,2869.27
1210 DATA BZAPY,2882.43,12BZAN,2903.56,3MCHOL,2985.46
1220 DATA 910DPHAN,3030.17,DBZAN,3232.98,BZGHIPE,3331.41
1230 DATA C34,3400.00
```

THALLIUM IN URINE — ICPMS

Analyte: Thallium	**Method No.** IH345
Matrix: Urine	**Sensitivity:** 0.2 μg/L
Procedure: Inductively coupled plasma mass spectrometry (ICPMS)	**Accuracy and Precision:** 98% ± 5%
Effective Date: 09/01/89	**Authors:** Michael G. Bell Ernest S. Gladney

SAFETY NOTE: Before beginning this procedure, read all of the Material Safety Data Sheets for the chemicals listed in Sec. 7. Read Sec. 4.3 of the EM-9 Safety Manual for information on personal protective clothing and equipment.

1. Principle of Method

1.1. The urine is directly aspirated into the Inductively Coupled Plasma Mass Spectrometer (ICPMS) after an initial dilution of 1:1 with 1% low-temperature redistilled (LTRD) nitric acid.

1.2. A standard curve and internal standard are used to compensate for the instrument drift and variations in nebulization over the course of the analysis.

2. Sensitivity

2.1. The sensitivity of the ICPMS for thallium is 0.2 μg/L in the urine matrix. The standard curve is prepared so that the limit of quantification is at 0.1 μg/L.

3. Accuracy and Precision

3.1. Analysis by ICPMS of spiked urine QC samples prepared between 1988 and 1990 using this procedure gave a mean recovery of 98% ± 5%. The data are published in Source Material 12.4. to 12.6. and are summarized below.

THALLIUM SPIKE RECOVERY AS A FUNCTION OF CONCENTRATION						
Year	Spike Level (μg/L)	Mean ± RSD (%)				Number of Samples
1988	15.0	93	±	2		4
	23.0	98	±	3		8
	40.0	97	±	4		4
	77.0	98	±	4		8
1989	15.0	98	±	3		13
	40.0	96	±	2		10
1990	15.0	104	±	17		4
	40.0	102	±	16		4

4. Interferences

4.1. There is a lack of instrumental interference at the high-mass range around thallium. The matrix interference is currently under study.

5. Collection and Storage of Samples

5.5. Spike the samples with 0.25 mL of LTRD hydrochloric acid upon receipt. Refrigerate the samples pending analysis.

6. Apparatus

6.1. Inductively Coupled Plasma Mass Spectrometer: VG Plasmaquad or equivalent, equipped with a Gilson Model 221 Autosampler.

6.2. Bottles: 125-mL, high-density, linear polyethylene.

6.3. Test tubes: 15-mL, polypropylene.

6.4. Pipettes: 100-, 250-, 500-, and 1000-μL.

6.5. Pipette tips for above pipettes.

7. Reagents

7.1. Nitric acid (LTRD).

7.2. Hydrochloric acid (LTRD).

7.3. Thallium standard (100 mg/L). Spex Industries, Inc., Edison, New Jersey.

7.3.1. Thallium standard solution (1 mg/L). Dilute 1 mL of 100-μg/mL thallium standard to 100 mL with 1% LTRD HNO_3.

7.3.2. Thallium standard solution (10 μg/L). Dilute 1 mL of 1-mg/L thallium standard to 100 mL with 1% LTRD HNO_3.

7.4. Rhenium standard (100 mg/L). Spex Industries, Inc., Edison, New Jersey.

7.5. Blank urine for standard curve.

7.6. QC material for urine (5 to 100 μg/L). Prepare in a 1:1 urine and 1% LTRD HNO_3 matrix.

8. Calibration and Standards

8.1. Prepare a calibration curve at the following concentrations: Blank, 100 ng/L, 1, 10, 25, 50, and 100 μg/L

8.1.1. Prepare a blank by adding 50 mL of urine to 50 mL of 1% HNO_3.

8.1.2. Prepare a 100-ng/L standard by adding 1 mL of 10-μg/L standard to 100 mL of 1:1 urine and 1% LTRD HNO_3.

8.1.3. Prepare a 1-μg/L standard by adding 100 μL of 1-mg/L standard to 100 mL of 1:1 urine and 1% LTRD HNO_3.

8.1.4. Prepare a 10-μg/L standard by adding 1 mL of 1-mg/L standard to 100 mL of 1:1 urine and 1% LTRD HNO_3.

8.1.5. Prepare a 25-μg/L standard by adding 0.25 mL of 10-mg/L standard to 100 mL of 1:1 urine and 1% LTRD HNO_3.

8.1.6. Prepare a 50-μg/L standard by adding 0.50 mL of 10-mg/L standard to 100 mL of 1:1 urine and 1% LTRD HNO_3.

8.1.7. Prepare a 100-μg/L standard by adding 1 mL of 10-mg/L standard to 100 mL of 1:1 urine and 1% LTRD HNO_3.

8.2. All solutions use ^{187}Re as an internal standard. Spike 0.1 mL (100 mg/L) of ^{187}Re into each 100-mL sample. This results in an internal standard concentration of 100 μg/L.

9. Procedure

9.1. Set up an element menu on the ICPMS with the following elements and isotopes: ^{187}Re and ^{205}Th.

9.2. Prepare a procedure definition on the ICPMS with the following parameters:

ICPMS PROCEDURE DEFINITIONS	
Sample	No. of Runs
Blank	3
100 ng/L	3
1 μg/L	3
10 μg/L	3
25 μg/L	3
50 μg/L	3
100 μg/L	3
Blank	3
QC sample	3
8 samples/spikes	3
Blank	3
8 samples/spikes	3
Blank	3
QC sample	3
10 μg/L	3
50 μg/L	3
100 μg/L	3

10. Operation of Equipment

10.1. Argon flow parameters.

- Auxiliary gas, 0.1 L/min
- Cooling gas, 13.0 L/min

- Nebulizer gas, 0.7 L/min

10.2. Set sample introduction flow rate at 0.8 mL/min.

10.3. Set water temperature of water cooled Scott spray chamber at 7°C.

10.4. Set Mienhard nebulizer type C at 3 mL/min at 30 psi.

10.5. Set rf generator power at 1350.

10.6. Program settings for element menu are as follows:

- Mass range is 185 - 206 amu.
- MCA channels = 1024.
- Number of sweeps = 400.
- Dwell time = 160 μs
- Baseline resolution between Pb 206-207-208.

11. Calculations

11.1. Set up a calibration curve using a blank and six standards. Plot this data as counts versus concentration. Determine the concentration of the unknown from the curve.

11.2. If available, use a Lotus spreadsheet to do blank subtraction, internal standard corrections, and the calculations of the unknowns and standard references materials. This method of calculation is fast and reduces errors.

12. Source Materials

12.1. VG Instruments manual for the operation of the ICP/MS series PQ1, (VG Instruments, 32 Commerce Center, Danvers, Massachusetts 01923).

12.2. A. Montaser and D. Golightly, *Inductively Coupled Plasmas in Analytical Atomic Spectrometry* (VCH Publishers, Inc. New York, New York, 10010, 1987).

12.3. E. S. Gladney, W. D. Moss, M. A. Gautier, M. G. Bell, "Determination of U in Urine: Comparison of ICP-Mass Spectrometry and Delayed Neutron Assay," *Health Physics* **57**, 171-175 (1989).

12.4. M. A. Gautier, E. S. Gladney, M. B. Philips, and B. T. O'Malley, "Quality Assurance for Heath and Environmental Chemstry: 1988", Los Alamos National Laboratory report LA-11637-MS (1989).

12.5. M. A. Gautier, E. S. Gladney, N. A. Koski, E. A. Jones, M. B. Philips, B. T. O'Malley, and E. A. Jones, "Quality Assurance for Heath and Environmental Chemstry: 1989," Los Alamos National Laboratory report LA-11995-MS (1990).

12.6. M. A. Gautier, E. S. Gladney, M. B. Philips, and B. T. O'Malley, and E.A. Jones, "Quality Assurance for Heath and Environmental Chemstry: 1990," Los Alamos National Laboratory report LA-12208-MS (1991).

THALLIUM IN URINE — ICPMS

Analyte: Thallium	**Method No.** IH345
Matrix: Urine	**Sensitivity:** 0.2 μg/L
Procedure: Inductively coupled plasma mass spectrometry (ICPMS)	**Accuracy and Precision:** 98% ± 5%
Effective Date: 09/01/89	**Authors:** Michael G. Bell Ernest S. Gladney

SAFETY NOTE: Before beginning this procedure, read all of the Material Safety Data Sheets for the chemicals listed in Sec. 7. Read Sec. 4.3 of the EM-9 Safety Manual for information on personal protective clothing and equipment.

1. Principle of Method

1.1. The urine is directly aspirated into the Inductively Coupled Plasma Mass Spectrometer (ICPMS) after an initial dilution of 1:1 with 1% low-temperature redistilled (LTRD) nitric acid.

1.2. A standard curve and internal standard are used to compensate for the instrument drift and variations in nebulization over the course of the analysis.

2. Sensitivity

2.1. The sensitivity of the ICPMS for thallium is 0.2 μg/L in the urine matrix. The standard curve is prepared so that the limit of quantification is at 0.1 μg/L.

3. Accuracy and Precision

3.1. Analysis by ICPMS of spiked urine QC samples prepared between 1988 and 1990 using this procedure gave a mean recovery of 98% ± 5%. The data are published in Source Material 12.4. to 12.6. and are summarized below.

THALLIUM SPIKE RECOVERY AS A FUNCTION OF CONCENTRATION			
Year	Spike Level (μg/L)	Mean ± RSD (%)	Number of Samples
1988	15.0	93 ± 2	4
	23.0	98 ± 3	8
	40.0	97 ± 4	4
	77.0	98 ± 4	8
1989	15.0	98 ± 3	13
	40.0	96 ± 2	10
1990	15.0	104 ± 17	4
	40.0	102 ± 16	4

4. Interferences

4.1. There is a lack of instrumental interference at the high-mass range around thallium. The matrix interference is currently under study.

5. Collection and Storage of Samples

5.5. Spike the samples with 0.25 mL of LTRD hydrochloric acid upon receipt. Refrigerate the samples pending analysis.

6. Apparatus

6.1. Inductively Coupled Plasma Mass Spectrometer: VG Plasmaquad or equivalent, equipped with a Gilson Model 221 Autosampler.

6.2. Bottles: 125-mL, high-density, linear polyethylene.

6.3. Test tubes: 15-mL, polypropylene.

6.4. Pipettes: 100-, 250-, 500-, and 1000-μL.

6.5. Pipette tips for above pipettes.

7. Reagents

7.1. Nitric acid (LTRD).

7.2. Hydrochloric acid (LTRD).

7.3. Thallium standard (100 mg/L). Spex Industries, Inc., Edison, New Jersey.

7.3.1. Thallium standard solution (1 mg/L). Dilute 1 mL of 100-μg/mL thallium standard to 100 mL with 1% LTRD HNO_3.

7.3.2. Thallium standard solution (10 μg/L). Dilute 1 mL of 1-mg/L thallium standard to 100 mL with 1% LTRD HNO_3.

7.4. Rhenium standard (100 mg/L). Spex Industries, Inc., Edison, New Jersey.

7.5. Blank urine for standard curve.

7.6. QC material for urine (5 to 100 μg/L). Prepare in a 1:1 urine and 1% LTRD HNO_3 matrix.

8. Calibration and Standards

8.1. Prepare a calibration curve at the following concentrations: Blank, 100 ng/L, 1, 10, 25, 50, and 100 μg/L

8.1.1. Prepare a blank by adding 50 mL of urine to 50 mL of 1% HNO_3.

8.1.2. Prepare a 100-ng/L standard by adding 1 mL of 10-μg/L standard to 100 mL of 1:1 urine and 1% LTRD HNO_3.

8.1.3. Prepare a 1-μg/L standard by adding 100 μL of 1-mg/L standard to 100 mL of 1:1 urine and 1% LTRD HNO_3.

8.1.4. Prepare a 10-μg/L standard by adding 1 mL of 1-mg/L standard to 100 mL of 1:1 urine and 1% LTRD HNO_3.

8.1.5. Prepare a 25-μg/L standard by adding 0.25 mL of 10-mg/L standard to 100 mL of 1:1 urine and 1% LTRD HNO_3.

8.1.6. Prepare a 50-μg/L standard by adding 0.50 mL of 10-mg/L standard to 100 mL of 1:1 urine and 1% LTRD HNO_3.

8.1.7. Prepare a 100-μg/L standard by adding 1 mL of 10-mg/L standard to 100 mL of 1:1 urine and 1% LTRD HNO_3.

8.2. All solutions use ^{187}Re as an internal standard. Spike 0.1 mL (100 mg/L) of ^{187}Re into each 100-mL sample. This results in an internal standard concentration of 100 μg/L.

9. Procedure

9.1. Set up an element menu on the ICPMS with the following elements and isotopes: ^{187}Re and ^{205}Th.

9.2. Prepare a procedure definition on the ICPMS with the following parameters:

ICPMS PROCEDURE DEFINITIONS	
Sample	No. of Runs
Blank	3
100 ng/L	3
1 μg/L	3
10 μg/L	3
25 μg/L	3
50 μg/L	3
100 μg/L	3
Blank	3
QC sample	3
8 samples/spikes	3
Blank	3
8 samples/spikes	3
Blank	3
QC sample	3
10 μg/L	3
50 μg/L	3
100 μg/L	3

10. Operation of Equipment

10.1. Argon flow parameters.

- Auxiliary gas, 0.1 L/min
- Cooling gas, 13.0 L/min

- Nebulizer gas, 0.7 L/min

10.2. Set sample introduction flow rate at 0.8 mL/min.

10.3. Set water temperature of water cooled Scott spray chamber at 7°C.

10.4. Set Mienhard nebulizer type C at 3 mL/min at 30 psi.

10.5. Set rf generator power at 1350.

10.6. Program settings for element menu are as follows:

- Mass range is 185 - 206 amu.
- MCA channels = 1024.
- Number of sweeps = 400.
- Dwell time = 160 μs
- Baseline resolution between Pb 206-207-208.

11. Calculations

11.1. Set up a calibration curve using a blank and six standards. Plot this data as counts versus concentration. Determine the concentration of the unknown from the curve.

11.2. If available, use a Lotus spreadsheet to do blank subtraction, internal standard corrections, and the calculations of the unknowns and standard references materials. This method of calculation is fast and reduces errors.

12. Source Materials

12.1. VG Instruments manual for the operation of the ICP/MS series PQ1, (VG Instruments, 32 Commerce Center, Danvers, Massachusetts 01923).

12.2. A. Montaser and D. Golightly, *Inductively Coupled Plasmas in Analytical Atomic Spectrometry* (VCH Publishers, Inc. New York, New York, 10010, 1987).

12.3. E. S. Gladney, W. D. Moss, M. A. Gautier, M. G. Bell, "Determination of U in Urine: Comparison of ICP-Mass Spectrometry and Delayed Neutron Assay," *Health Physics* **57**, 171-175 (1989).

12.4. M. A. Gautier, E. S. Gladney, M. B. Philips, and B. T. O'Malley, "Quality Assurance for Heath and Environmental Chemstry: 1988", Los Alamos National Laboratory report LA-11637-MS (1989).

12.5. M. A. Gautier, E. S. Gladney, N. A. Koski, E. A. Jones, M. B. Philips, B. T. O'Malley, and E. A. Jones, "Quality Assurance for Heath and Environmental Chemstry: 1989," Los Alamos National Laboratory report LA-11995-MS (1990).

12.6. M. A. Gautier, E. S. Gladney, M. B. Philips, and B. T. O'Malley, and E.A. Jones, "Quality Assurance for Heath and Environmental Chemstry: 1990," Los Alamos National Laboratory report LA-12208-MS (1991).

TRICHLOROACETIC ACID IN URINE

Analyte: Trichloroacetic Acid	**Method No:** IH350
Matrix: Urine	**Detection Limit:** 4 mg/L
Procedure: Colorimetric	
Effective Date: 01/01/76 to 09/10/92	**Contact Person:** Carol Sutcliffe

1. **Principle of Method**

   1.1. A urine sample is heated with potassium hydroxide and pyridine.

   1.2. The resultant color produced is measured colorimetrically at 530 nm.

2. **Accuracy and Precision**

   2.1. Thirty quality-control samples spiked from 4 to 14 mg/L gave recoveries of 93% ±15%.

3. **Interferences**

   3.1. Under the conditions of this procedure, trichloroethylene does not interfere.

   3.2. Chloroform, carbon tetrachloride, chloral hydrate, and tetrachloroethane give similar reactions and will increase the apparent trichloroacetic acid concentration.

4. **Sample Collection and Storage**

   4.1. Collect spot samples of urine no later than 12 to 24 h after exposure to trichloroethylene.

   4.2. Refrigerate samples until analyzed.

5. **Apparatus**

   5.1. Spectrophotometer: Perkin-Elmer UV-VIS, Model Lambda 7.

   5.2. pH meter: Beckman Zeromatic II or equivalent.

   5.3. Water bath: Precision Scientific Company, Chicago, Illinois, or equivalent.

   5.4. Reaction tubes: Pyrex 2.22-cm-i.d. by 12.0-cm-high plus a 19/38 female joint (Fig. 1).

   5.5. Air condensers: 0.4-cm-i.d. by 20.0-cm-long Pyrex tubing attached to 19/38 male joint (Fig. 1).

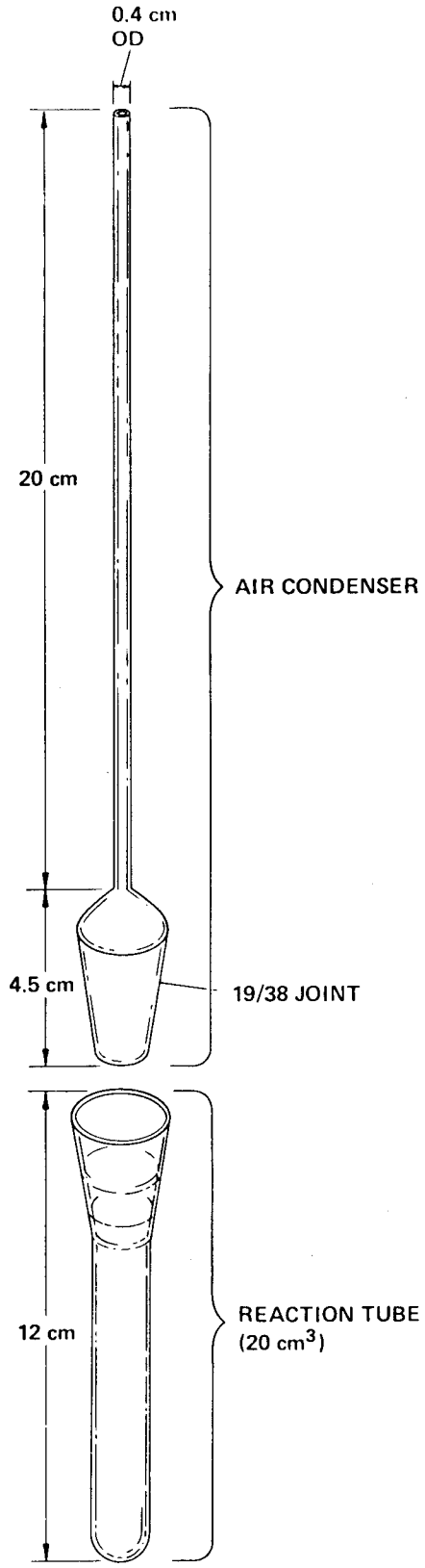

Fig. 1. Air Condenser and Reaction Tube.

5.6. Volumetric flasks: 10-, 25-, and 1000-mL.

5.7. Pipette: 1-, 5-, and 10-mL graduated transfer.

5.8. Safety pipette.

6. Reagents

6.1. Toluene. "Baker Analyzed" Reagent, spectrophotometric grade.

6.2. Pyridine. Aldrich, 99+%, spectrophotometric grade, Gold Label.

6.3. Potassium hydroxide solution (4.3 M). Dissolve 241.3 g of KOH in approximately 700-mL distilled water in a 1000-mL volumetric flask. Cool and make up to volume with distilled water. Transfer to a polyethylene bottle for storage.

6.4. Trichloroacetic acid (Crystals). Mallinckrodt AR or equivalent.

6.5. Ten-to-one pyridine:toluene mix (from 6.1. and 6.2.).

7. Calibration and Standards

7.1. Dissolve 7.5 g trichloroacetic acid crystals (TCA) in 500-mL distilled water.

7.2. Determine the actual concentration of the stock standard by titrating 10 mL of TCA solution with a standardized solution of 0.1 N NaOH using the Beckman Zeromatic II pH meter. If necessary, adjust the normality so that the solution contains approximately 15 mg/mL TCA and retitrate.

7.3. The stock standard keeps indefinitely if well-stoppered and refrigerated.

7.4. Intermediate standard.

7.4.1. Let a portion of the stock standard come to room temperature and pipette 1 mL into a 100-mL volumetric flask.

7.4.2. Dilute to volume with distilled water. The concentration of the standard will depend on that of the stock standard. The intermediate standard should contain approximately 150 µg/mL TCA.

7.4.3. The intermediate standard should be prepared fresh for each set of determinations.

7.5. Working standards.

7.5.1. Pipette 1 and 1.5 mL respectively of the intermediate standard into 25-mL volumetric flasks and fill to volume with blank urine.

7.5.2. Pipette 1, 1.5, 2, and 3 mL respectively of the intermediate standard into 10-mL volumetric flasks and fill to volume with blank urine.

7.5.3. This gives standards of approximately 6, 9, 15, 22, 30, and 45 μg/mL of TCA.

8. Procedure

8.1. Pipette 1 mL of each of the working standards into the reaction tubes shown in Fig. 1. The actual concentrations must be determined from the titration of the stock standard.

8.2. Pipette 1 mL of blank urine into a reaction tube to be used as the reagent blank.

8.3. Pipette 1 mL of the urine sample into a reaction tube.

8.4. To each tube add 5 mL of 4.3 M KOH solution and 10 mL of a 10:1 pyridine:toluene mix.

NOTE: Be certain to add KOH solution before the pyridine mixture.

8.5. Insert an air condenser (Fig. 1) into each tube, mix gently by tapping the tubes, and heat in a constant temperature water bath at 85°C for 8 min.

8.6. Remove the tubes from the water bath and let them cool to room temperature.

8.7. Stopper and refrigerate the tubes if it is not convenient to read the samples immediately. The color will remain stable for 24 h if the layers are left in contact and the tubes are stoppered and refrigerated.

8.8. Transfer 5 mL of the supernatant organic layer to 10-mm-diam by 105-mm-long Coleman cuvettes taking care not to disturb the aqueous layer.

8.9. Slowly add 1 mL of distilled water to each tube, allowing it to run down the inside of the tube.

8.10. Swirl the tube gently until the layers are mixed and the solution clears. Transfer the solution to a 1-cm liquid square quartz cell.

8.11. Read the absorbance of the pink solutions within 30 min after the layers are mixed at a wavelength of 530 nm against the reagent blank set at zero absorbance.

9. Calculations

9.1. Plot the standard curve using semilog graph paper with absorbance on the logarithmic y-axis and concentration of TCA on the x-axis. See Fig. 2.

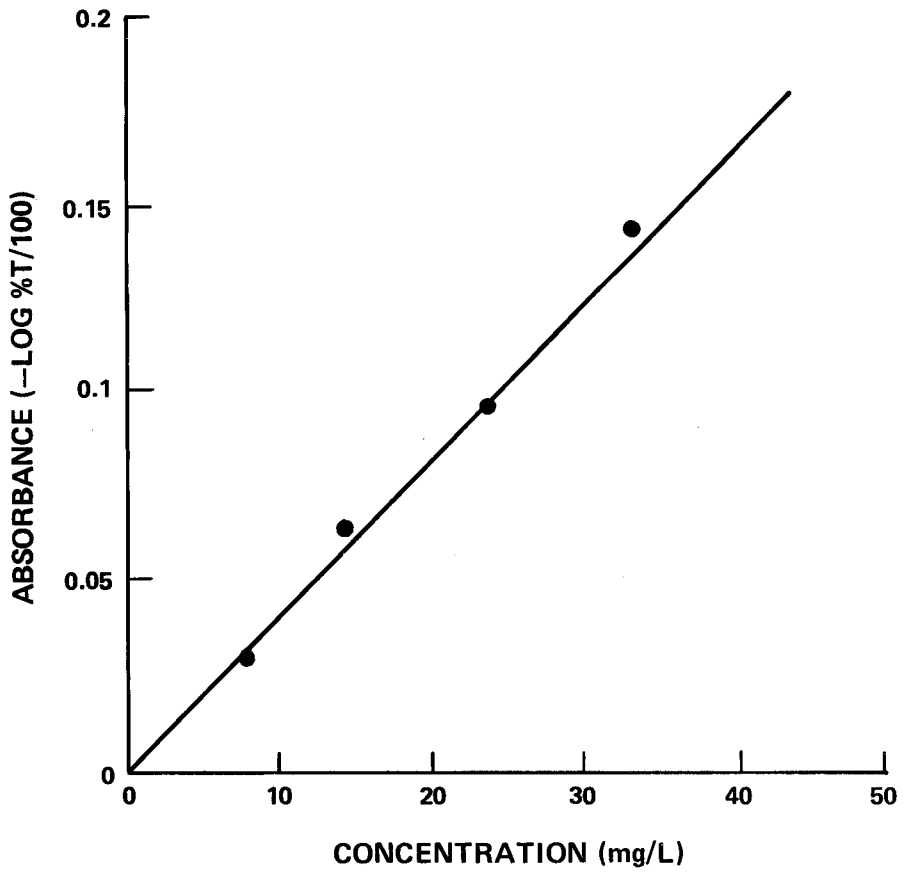

Fig. 2. TCA Calibration Curve.

9.2. Determine the concentrations of the samples from the absorbances and the standard curve.

$$\text{mg TCA/L} = \frac{\text{mg TCA/mL} \times 1000\ \text{mL}}{1000\ \mu\text{g/mg}}$$

10. Source Materials

10.1. H. B. Elkins, *The Chemistry of Industrial Toxicology* (John Wiley & Sons, Inc., New York, 1959) p. 257.

10.2. T. Z. Seto and M. O. Schultze, "Determination of Trichloroethylene, Trichloroacetic Acid, and Trichloroethanol in Urine," *Anal. Chem.* **28**, 1625-29 (1956).

GAS CHROMATOGRAPHY AND MASS SPECTROMETRY - GENERAL PROCEDURE

Analyte: General	**Method No.**: IH800
Matrix: General	**Detection Limit**: Varies with analyte and matrix
Procedure: The sample is separated into its individual components by gas chromatography; a mass spectrum is obtained of each component.	**Precision**: Primarily a qualitative method
Effective Date: 05/16/83 to 09/10/92	**Author**: Stuart D. Nielsen

1. **Principle of Method**

   1.1. The sample may be solid, liquid, or gas but must be reasonably volatile. The sample is converted, if necessary, to a form that may be injected into the gas chromatograph.

   1.2. The sample is injected into the gas chromatograph, which separates it into its individual components.

   1.3. The effluent from the gas chromatograph goes directly into a mass spectrometer where a mass spectrum of each component is obtained.

   1.4. This mass spectrum is used to qualitatively identify the composition of the sample or, occasionally, to quantitate the amount present.

2. **Detection Limit**

   2.1. The detection limit of the method varies with the analyte.

   2.2. Detection limit is generally in the parts-per-million range.

3. **Accuracy and Precision**

   3.1. This is generally a qualitative procedure.

4. **Apparatus**

   4.1. Gas chromatograph/mass spectrometer/data system: HP 5993A, Hewlett-Packard Corp., Palo Alto, California.

   4.2. Gas syringes: 1-, 2-, and 5-mL.

4.3. Microliter syringes: 10-μL, Hamilton Co., Reno, Nevada.

4.4. Mini-injectors: 0.01- and 0.05-μL, Precision Sampling Corp., Baton Rouge, Louisiana.

5. Reagents

5.1. High-purity solvents as appropriate.

6. Sample Preparation

6.1. Vapors and gases.

6.1.1. No sample preparation is necessary for vapors and gases. An aliquot may be directly injected using a gas syringe. A 2.0-mL aliquot is usually sufficient.

6.1.2. If concentration of a vapor is necessary to achieve detection, pump the sample from its container through a charcoal tube. Treat the charcoal tube as described in procedure IH260.

6.2. Liquids.

6.2.1. Neat liquids may be injected, with no previous preparation, by means of a mini-injector.

6.2.2. Solutions may be injected, with no previous preparation, by means of a microliter syringe. Usually, 1-2 μL is adequate.

6.2.3. Neat liquids may be dissolved in a suitable solvent, one which elutes from the chromatographic column outside the range of the analytes. This solution is then handled as in Step 6.2.2.

6.3. Solids.

6.3.1. Few solids have sufficient volatility to be examined by gas chromatography/mass spectrometry (GC/MS).

6.3.2. If the solid does have sufficient volatility, it must be dissolved in a suitable solvent and handled as a solution. See Step 6.2.2.

7. Instrument Operation

7.1. The following instructions pertain specifically to the Hewlett-Packard 5993A.

7.2. Instrument startup.

7.2.1. Turn on the disc drives by moving the toggle switches to **RUN**. The discs are ready when the "drive ready" lights come on.

7.2.2. Press the **HALT** switch on the front panel of the computer if the **RUN** indicator is lit.

7.2.3. Move the lit indicator to the **S** position using the register select switch.

7.2.4. Press **CLEAR DISPLAY**.

7.2.5. Turn on switches 15, 12, 9, and 1 by pressing the top half of the switch.

7.2.6. Press the following switches in sequence: **STORE, PRESET, IBL/TEST,** and **RUN**.

7.2.7. The computer will draw the HP Logo, display the program revision code, and ask the question **PRN**? (Program Reference Number).

7.2.8. Enter the number or name of the program you wish to run. The numbers and the names of the programs available will be listed if you type in **71** and press the **<CR>** key, (**<CR>** = Return) followed by **LIST <CR>**.

7.3. Instrument tuning (the Autotune Program).

7.3.1. Type **AUTOTUNE <CR>**.

7.3.2. The computer asks, **"What is today's date?"** Type in the date in the form **M/D/Y XXX <CR>**, where XXX are your initials.

7.3.3. The computer asks for valve operations. **Be certain that the GC/MS valve is closed.**

7.3.4. Turn the **CALIBRATION SAMPLE** valve to **ON**.

7.3.5. Turn the **PLOTTER/PRINTER** switch to **ON**.

7.3.6. Type **Y <CR>**.

7.3.7. The terminal will keep you informed of what the computer is doing as it tunes the instrument. A report will appear on the terminal screen and will be printed on the plotter/printer when the tuning is completed.

7.3.8. The copies made by the plotter/printer are not permanent. Make a reduced photocopy and tape it into the instrument logbook.

7.3.9. The question **PRN?** will automatically return to the screen after the tuning program is completed.

7.3.10. Turn the **CALIBRATION SAMPLE** valve to **OFF**.

7.4. Librarian program.

7.4.1. The program **LIB** (Librarian) manages the system master and auxiliary cartridges. To reach it, type **LIB <CR>**. It will respond with **LIBRARIAN** and "!".

7.4.2. For this and most other prompts, if you are confused, typing **? <CR>** will cause to be displayed on the screen a brief written explanation of what the program expects you to do.

7.4.3. Only a few of the Librarian commands are needed for normal operation.

7.4.3.1. **CD <CR>** (Cartridge Directory) will list on the screen the cartridges currently available and the remaining space available in each cartridge.

7.4.3.2. **CC <CR>** (Catalog Cartridge) will make available any cartridge on a disc currently in the disc drive.

7.4.3.3. **RC <CR>** (Release Cartridge) will release any cartridge, making it unavailable. If your attempt to release a cartridge results in an error message, do a **REPACK**, see Step 7.4.3.4., and try again.

CAUTION: Be certain to release all cartridges except the master cartridge (CRN 1) before removing a disc from the disc drive.

7.4.3.4. **REPACK <CR>** condenses the files in a cartridge into as little disc space as possible. **CAUTION:** In no way interrupt the repack operation once it has started.

7.4.3.5. **DELETE <CR>** will delete unwanted files from the cartridge.

7.4.3.6. **FNLIST <CR>** will list the files present on a specified cartridge.

7.4.4. Hold down the **CNTL** (Control) key and press **A** to terminate the Librarian program. This will return the system to the question **PRN?**.

7.5. Sample analysis.

7.5.1. Turn on the helium and air valves.

7.5.2. If subambient operation is planned, turn on the liquid nitrogen cylinder.

7.5.3. Type **AQUIRE <CR>** to start the data acquisition program.

7.5.4. The computer will ask a series of questions. If a value appears in brackets immediately after a question, **<CR>** will automatically enter that value. To enter a value other than the one in brackets, type in the desired value followed by **<CR>**.

7.5.4.1. The MS tuning file is always **1000**.

7.5.4.2. Obtain a new **FRN** (File Reference Number) from the instrument logbook. Use the next sequential number and record all relevant information pertaining to the run in the logbook.

7.5.4.3. **CRN** (Cartridge Reference Number) is also obtained from the instrument logbook or from the cartridge directory in **LIBRARIAN**. The total remaining space in a cartridge is given when the cartridge number is entered so that it can be determined if adequate space is available for the run.

7.5.4.4. **RUN TIME?** - The total time in minutes from start until the program will automatically shut itself down. The operator can manually stop the run earlier with **switch 15** on the computer control panel.

7.5.4.5. **START, STOP MASSES?** - Three masses must be entered. The second and third masses may be the same. The first mass is the low end of the range to be scanned. For most runs 40 is adequate but, for low molecular weight analytes, values down to 10 may be used. The second and third masses are upper ends of the range. The instrument will automatically change from the second to the third at a preset time in the run. The upper masses are set a little above the highest molecular weight of an expected analyte. If the molecular weight is totally unknown, 400 is a good first setting. Values below 200 use excessive disc space without increasing the quality of the data. Enter the three masses separated by commas.

7.5.4.6. **MASS RANGE CHANGE TIME?** - This is the time (in minutes) into the run when the upper end of the range will change from value 2 to value 3. Enter 0 if they are both the same.

7.5.4.7. **A/D MEASUREMENTS PER DATUM POINT?** - This is proportional to the amount of time the instrument looks at each mass unit. It can have values from 1 to 8. A value of 3 is usually adequate.

7.5.4.8. **THRESHOLD?** - Enter the absolute number of counts necessary to be seen by the electron multiplier before a data point is recorded in the memory. A value of 20 is normal.

7.5.4.9. **SCAN START DELAY?** - The instrument will delay data collection until the solvent peak has passed through the column. This is the desired value of that delay. For gas and vapor samples, no delay is used. For most low-boiling solvents, 2.5 to 3.0 minutes is necessary. The run will be automatically aborted with no recovery available if the delay is not used or if it is improperly set too short for a solvent peak and the mass spectrometer is overloaded.

7.5.4.10. **GC TEMPERATURE 1?** - Enter the initial temperature for the GC oven temperature program. The number displayed in brackets is the current oven temperature. The available temperature range is -50 to 280°C. If you do not use the liquid nitrogen cylinder, the oven will not be stable below 40°C.

7.5.4.11. **TIME AT TEMPERATURE 1?** - Enter the time in minutes desired for the oven to operate isothermally before oven temperature programming. Any value higher than 31 will hold the isothermal temperature indefinitely.

7.5.4.12. **RATE?** - Enter the desired oven temperature program rate in degrees per minute. Maximum is 30.

7.5.4.13. **GC TEMPERATURE 2?** - Enter the maximum temperature desired for the oven temperature program. The value must be equal to or greater than temperature 1 with a maximum of 280°C.

7.5.4.14. **TIME AT TEMPERATURE 2?** - Enter the time in minutes for the isothermal operation desired after the oven temperature reaches temperature 2. Any value higher than 31 will hold the temperature indefinitely. Otherwise, the instrument will return to the initial conditions at the expiration of this time.

7.5.4.15. **INJECTION TEMPERATURE?** - Enter the desired injection port temperature. The number displayed in brackets is the current temperature. The maximum temperature is 350°C. A significant amount of time will be required to achieve any great change in temperature.

7.5.4.16. **ELECTRON MULTIPLIER VOLTAGE?** - The value displayed in brackets is the autotune value if the instrument has just been started up; otherwise, it is the present value. Increasing the voltage gives increased sensitivity, although little is gained above the autotune value and multiplier life is decreased significantly. The autotune value is normally used. The autotune value is used for trace analyses. Values entered other than even hundreds will be rounded to even hundreds.

7.5.4.17. **SAMPLE NAME?** - Enter up to 70 alphanumeric characters to designate the sample.

7.5.4.18. **MISC. DATA?** - Enter up to 70 additional alphanumeric characters for storage with the data. This is normally used to record operating conditions.

7.5.4.19. **MASSES FOR UPPER DISPLAY?** - The instrument will display two single ion chromatograms above the total ion chromatogram. Up to three masses can be entered for the upper display. The first, second, or third ion chosen can be displayed using **switches 11, 10, or 9** on the computer panel.

7.5.4.20. **MASSES FOR LOWER DISPLAY?** - Three additional masses may be entered with the display controlled by **switches 8, 7, and 6.** Obtain a copy of the operating parameters for the notebook by pressing the **GRAPHICS COPY** key. The **<CR>** enters the data and continues the program.

7.5.5. The present and target temperatures are displayed. The instrument waits for temperature equilibration at the target temperatures before prompting for sample injection. If the operator wishes to override the equilibration wait, it can be done with **switch 0** on the front panel.

7.5.6. The question **GO?** appears on the screen when temperature equilibrium is attained. **Type Y but do not press <CR>.**

7.5.7. Open the GC/MS valve.

7.5.8. Turn **FLOW MODE** valve to **INJECT.**

7.5.9. Make the injection and immediately press **<CR>** and start the timer.

7.5.10. After 30 seconds, turn the **FLOW MODE** valve to **RUN.**

7.5.11. Approximately 20 seconds after the injection or after the scan start delay, the scanning will start and the total ion chromatogram will appear on the screen. Scanning will continue for the **RUN TIME** entered unless it is manually terminated with **switch 15** on the front panel. The screen will display about 10 minutes of data. When the screen is full, it is wiped clean, and the display starts over. The previous data are not available until the completion of the run.

7.5.12. After the scan is terminated, either manually or by expiration of the run time, the terminal will ask **SAVE?**. Enter either **Y <CR> or N <CR>**. If the answer is yes, the data are saved on the disc. If the answer is no, the data are lost and the FRN may be reused. Because of the finality of a no, the operator is given a second chance to change his mind. This question is answered as before.

7.5.13. The terminal will now ask **RESTART?**. To make an additional run, enter **Y <CR>**; otherwise, enter **N <CR>**.

7.5.14. It is recommended that, after the instrument is first started up each day, a dummy run should be made before any actual sample runs. A maximum oven temperature at least as high as the temperature that will be used in the sample runs should be used to condition the column. It is not necessary to save these data.

7.6. Examination and manipulation of data.

7.6.1. Type **ANSWER <CR>.**

7.6.2. The terminal will ask **SAMPLE FRN?**. Enter the file reference number of the run desired. The terminal will respond with the total ion chromatogram, normalized to the scan with the largest total ion abundance. If the run has less than 500 total scans, the display will also contain the mass spectrum of the scan with the largest total ion abundance. If there are more than 500 scans, the operator will be asked to move the cursor, using the graphics keypad, to the scan desired for display.

7.6.3. To examine other scans, move the cursor to the desired scan and push the space bar.

7.6.4. To obtain a background subtracted spectra, display the spectrum of the desired peak by moving the cursor to the peak and pressing the **SPACE BAR**, if necessary. Then press **E**, press +, move the cursor to the desired background **SCAN**, press −, and then press **D** to display.

7.6.5. Hard copies of the screen display can be obtained by pressing the **GRAPHICS COPY** key.

7.6.6. Single ion chromatograms can be obtained by pressing **I** and entering the masses of the ions of interest. Up to 10 ions may be entered. To terminate the list of ions, press **<CR>** without entry of a mass. To exit back to the main display, press **E**.

7.6.7. A tabulation of the mass spectrum displayed on the screen can be obtained by pressing **T**. A hard copy of the tabulation can be obtained by pressing **ALPHA COPY**. To return to the main display, hold **CNTL** and press **R**.

7.6.8. A library search of the displayed spectrum may be carried out by pressing **L**. The terminal will respond with the following series of questions.

7.6.8.1. **LOW AND HIGH MOLECULAR WEIGHT LIMITS?** - The narrower the range searched, the faster will be the search. The approximate molecular weight can usually be determined from the mass spectrum. Enter the limits of the desired range, separated by a comma.

7.6.8.2. **USE DEFAULT SEARCH OPTIONS?** - For the first search, **N <CR>** must be entered. For subsequent searching, **Y <CR>** may be used.

7.6.8.3. **COMPARISON FRN?** - The default value of 3000 is correct. Enter **<CR>**.

7.6.8.4. **FULL, CONDENSED, OR BOTH?** - Enter **B <CR>**.

7.6.8.5. **MAXIMUM ACCEPTABLE ABUNDANCE RATIO?** - Enter **2.5 <CR>**.

7.6.8.6. **MAX % NON-MATCHING PEAKS ALLOWED?** - Enter **<CR>**.

7.6.8.7. **SIMILARITY SEARCH OR COMPONENT SEARCH?** - Enter **<CR>**.

7.6.8.8. **MAX HITS DESIRED?** - A match of a library spectrum with the unknown, within the specified limits, is defined as a hit and a hit index is assigned. The hit index ranges from 0.0 for a poor match to 1.0 for a perfect match. The hits are listed in decreasing hit index order. If a valid match is found, it will usually appear in the first few on the list. Enter the desired number. The default value of 10 is normally acceptable. A value of 9 allows them all to be printed onto a single page.

7.6.8.9. **MINIMUM SIGNIFICANT ABUNDANCE?** - Unless it is known that the abundance of the molecular ion is less than 1%, the default value of 1% is usually used.

7.6.8.10. **MAXIMUM % CONTAMINATION ALLOWED?** - Enter **<CR>**.

7.6.8.11. **MINIMUM % COMPONENT ALLOWED?** - Enter **<CR>**.

7.6.8.12. **MAX % CHANGE IN MULTIPLIER PER M/E?** - Enter **2.5 <CR>**.

7.6.8.13. **COMPARISON SPECTRUM OF SPECIAL INTEREST?** - Enter **<CR>**.

7.6.8.14. **MINIMUM % MATCH FACTOR?** - Enter **<CR>**. The terminal will respond with **LIBRARY SEARCH START**.

7.6.8.15. After a period of time, if no match fitting the options is found, the terminal will say **NO LIBRARY MATCH FOUND** and **PAUSE**. Hold down the **CNTL** key and press **R** to continue. The program will return to the main display.

7.6.8.16. If a match is found, the terminal will ask where to list the data. Enter **<CR>**. A list of the compound names and the data concerning the quality of the match will appear on the screen, ending with **PAUSE**. A hard copy of this listing can be obtained by pressing the **ALPHA COPY** key. To continue, hold down the **CNTL** key and press **R**.

7.6.8.17. The unknown spectrum and the spectrum of the first match will appear on the screen for comparison. A hard copy of this can be obtained by pressing the **GRAPHICS COPY** key.

7.6.8.18. Entering **<CR>** will replace the match spectrum with the next match. The operator can step through and compare each match with the unknown. To return to a previous match, enter its **number** followed by **<CR>**.

7.6.8.19. After the last match is compared, entering **<CR>** will return the program to the main display.

7.6.9. To examine another chromatographic run, press **F** and enter the **FRN** of the desired data.

7.6.10. Hold down the **CNTL** key and press **A** to exit from the program.

7.7. Opening a new data storage cartridge.

7.7.1. When the data storage cartridge is full, it is necessary to open a new cartridge.

7.7.1.1. From the **PRN?** state, type **LIB <CR>**.

7.7.1.2. Type **OPEN <CR>** and answer the questions to open a new CRN at the next available location, allowing 100 FRNs. Use the next sequential CRN number and name the cartridge "Miscellaneous Data Files Starting with FRN____."

7.8. Instrument shutdown.

7.8.1. Unless there is reason to leave the chromatograph hot, use **AQUIRE** and set up a dummy run with the initial and final oven temperatures set to zero and the injection port temperature set to two. While the instrument is waiting for temperature equilibrium, exit from the program by holding down the **CNTL** key and pressing **A**.

7.8.2. Close the GC/MS valve.

7.8.3. Turn off the air and helium valves.

7.8.4. Turn off the plotter/printer.

7.8.5. Darken the screen of the terminal by holding down the **SHIFT** key and pressing the **G CURSOR** key. If words still appear on the screen, hold down the **SHIFT** key and press the **STOP** key.

7.8.6. Turn off the disc drives by moving the toggle switches to **STOP**.

8. Source Materials

8.1. *Hewlett-Packard 5993A GC/MS System Quick Start Manual, Part No. 05993 - 90007* (Hewlett-Packard, Palo Alto, California, 1977.)

8.2. *Hewlett-Packard 5993A GC/MS System Users Manual, Part No. 05993-90009* (Hewlett-Packard, Palo Alto, California, 1981.)

INFRARED SPECTROSCOPY - GENERAL PROCEDURE

Analyte: General	**Method No.:** IH810
Matrix: General	**Detection Limit:** Varies with analyte and sample preparation from less than 1 ppm to 1%
Procedure: Sample is converted to an appropriate form and a spectrum obtained by a spectrophotometer	**Precision:** Generally a qualitative procedure
Effective Date: 01/01/83 to 09/10/92	**Author:** Stuart D. Nielsen

1. Principle of Method

1.1. The sample may be solid, liquid, or gas. The sample is converted, if necessary, to a form compatible for use with the spectrometer.

1.2. A spectrum is obtained in the infrared region from 4000-250 cm^{-1}. This spectrum is used to qualitatively identify the composition of the sample or to occasionally quantitate the amount of analyte present.

2. Sensitivity

2.1. The sensitivity of the method varies from less than 1 ppm for a gas phase sample with strong absorbance in the 20-m cells to 5% for a poorly absorbing compound in a solid or liquid sample.

3. Accuracy and Precision

3.1. Infrared spectroscopy is generally a qualitative procedure.

3.2. Quantitative determinations are possible, and precision is approximately ±1% for absorbances of 0.3-0.6 (25-50% transmission), rising to ±30% near the extremes of 100% or 0% transmission.

4. Apparatus

4.1. Small grinding mill: the Crescent Wig-L-Bug, Crescent Dental Manufacturing Co., Lyons, Illinois.

4.2. Sodium chloride discs: 25-mm-diam by 4-mm-thick, Barnes Analytical/Spectra Tech, Stamford, Connecticut, or equivalent.

4.3. Disc holder: for NaCl discs, Barnes Analytical/Spectra Tech, Stamford, Connecticut, or equivalent.

4.4. Pellet die: Wilks, Norwalk, Connecticut, or equivalent.

4.5. Hydraulic press: Carver Laboratory Press, Model C, Fred S. Carver, Inc., Menomonee Falls, Wisconsin, or equivalent.

4.6. Pellet holder: Wilks, Norwalk, Connecticut, or equivalent.

4.7. Solution cells: Wilks, Norwalk, Connecticut, or equivalent.

4.8. Gas cells: 10-cm, Wilks, Norwalk, Connecticut, or equivalent.

4.9. Gas cells: 20-m, Wilks, Norwalk, Connecticut, or equivalent.

4.10. Infrared spectrophotometer.

5. Reagents

5.1. Mineral oil. Clear and of high purity such as Nujol, Perkin-Elmer Corp., Norwalk, Connecticut, or equivalent.

5.2. Fluorolube or Kel-F. Perkin-Elmer Corp., Norwalk, Connecticut, or equivalent.

5.3. Potassium bromide (spectrographic grade). International Crystal Laboratories, Irvington, New Jersey, or equivalent.

5.4. Spectroquality solvents as appropriate. Burdick and Jackson Laboratories, Inc., Muskegon, Michigan, or equivalent.

6. Sample Preparation

6.1. Mulling (for solid materials).

6.1.1. For most organic materials, a refined mineral oil (Nujol) is a suitable liquid for dispersing powdered samples. Nujol is a mixture of long-chained saturated hydrocarbons. It has three regions of blackout in the range of the spectrometer, 3100-2700 cm^{-1}, 1500-1300 cm^{-1}, and 750-700 cm^{-1}.

6.1.2. The disadvantage of Nujol is the blackout of the carbon-hydrogen region at 3100-2700 cm^{-1}. When the sample requires examination of that region, halogenated hydrocarbons such as Fluorolube, a perfluorokerosene, or Kel-F, a perfluoro stopcock grease may be used.

6.1.3. If sufficient sample is available to obtain spectra in both Nujol and Fluorolube, the entire spectrometer range can be examined.

6.1.4. The dry sample is ground to a fine powder using a small mill such as the Crescent Wig-L-Bug. The suspending liquid is added and the grinding continued until a smooth paste is obtained. The paste is sandwiched between polished sodium chloride discs.

6.1.4.1. Place 1-5 mg of sample in the stainless steel sample container for the Wig-L-Bug.

6.1.4.2. Place a stainless steel ball in the sample container with the sample and cap the container.

6.1.4.3. Attach the sample container to the Wig-L-Bug and grind for 30 s.

6.1.4.4. If the sample has not been ground to a fine powder, continue grinding for 15-s periods until the consistency is acceptable.

6.1.4.5. Add 5-10 drops of either the Nujol or Fluorolube suspending agent to the sample in the container. Reattach the container to the Wig-L-Bug and grind for 30 s.

6.1.4.6. Place a portion, 2 or 3 drops, of the resulting paste on a polished sodium chloride disc. Place another sodium chloride disc on top.

6.1.4.7. Press the discs together to obtain a thin film and place the disc sandwich in a disc holder.

6.1.5. To obtain good spectra from mulled samples, particular attention and care should be exercised during the initial grinding operation. A poorly ground sample will cause extensive scattering of the light because of the presence of particles of excessive size.

6.2. Potassium bromide pellets (for solid materials).

6.2.1. For most solid materials, potassium bromide has been found to be a suitable material for pelletizing powdered samples. It is transparent from 5000-400 cm^{-1} and sinters at a relatively low pressure.

6.2.2. The major disadvantage of potassium bromide is that it is hygroscopic, making it difficult to prepare a pellet free of water. This makes examination of the -OH and -NH region difficult.

6.2.3. If potassium bromide proves unsuitable, fine-particle-size Teflon may be used in its place to prepare transparent discs.

6.2.4. The dry sample is ground to a fine powder using a small mill such as the Crescent Wig-L-Bug. The potassium bromide (or Teflon powder) is added and grinding is continued to thoroughly mix the materials. The mixture is then transferred to a pellet die, and the die is evacuated and then pressed to form the pellet as follows:

6.2.4.1. Place 1-3 mg of sample in the stainless steel sample container of the Wig-L-Bug.

6.2.4.2. Place the stainless steel ball in the sample container with the sample and cap the container.

6.2.4.3. Attach the sample container to the Wig-L-Bug and grind for 30 s.

6.2.4.4. If the sample has not been ground to a fine powder, continue grinding for 15-s periods until the consistency is acceptable.

6.2.4.5. Add 200-300 mg of potassium bromide to the sample in the container, replace the container on the Wig-L-Bug, and grind for 30 s.

6.2.4.6. Begin assembly of the pellet die by attaching the body to the base and placing the lower anvil into the cavity, taking care that the polished surface of the anvil is up.

6.2.4.7. Place the sample mixture into the cavity of the pellet die, taking care to get the mixture uniformly distributed over the bottom of the cavity.

6.2.4.8. Complete assembly of the die by placing the upper anvil, polished face down, and the plunger into the cavity.

6.2.4.9. Place the assembled die into the hydraulic press, attach a vacuum line, and evacuate the die.

6.2.4.10. Pump the press to 20 000 psi and leave it for at least 2 min.

6.2.4.11. Release the pump pressure, remove the vacuum line, and remove the die from the press.

6.2.4.12. Remove the pellet from the die, being careful not to break the pellet, and place it in a pellet holder.

6.2.5. If the pellet contains too much sample, a portion of the pellet may be reground with additional potassium bromide and reformed. Similarly, if the pellet contains too little sample, it may be reground with additional sample and reformed.

6.3. Films (for high-boiling liquids and some solids).

6.3.1. Thin films of sample that are held between sodium chloride discs are usually suitable for qualitative analyses.

6.3.1.1. For liquid samples the film can be formed by placing 1-2 drops between two sodium chloride discs and pressing the discs together with your fingers as was done for Nujol mulls (See Steps 6.1.4.6. and

6.1.4.7.). Another technique must be used if the vapor pressure of the liquid is high because the liquid will evaporate before the spectrum can be obtained.

6.3.1.2. Films can be formed from many liquids and solids by dissolving them in a suitable, low-boiling solvent, placing the solution on a sodium chloride disc, and allowing the solvent to evaporate.

6.3.1.3. Solids with low melting points can be prepared as a film by heating a sodium chloride disc to above the melting point of the sample, placing the sample on the hot disc, and allowing the melted sample to flow. The disc should be cooled before the spectrum is obtained.

6.4. Solutions.

6.4.1. The spectrum of the solute in dilute (1-10%) solutions can be obtained in the regions where the solvent is transparent, by using solution cells.

6.4.2. A matched cell containing pure solvent is placed in the reference beam of the spectrometer to compensate for the absorbances of the solvent.

6.4.3. The major advantages of solution spectra are the ease of sample preparation, the uniformity of the resulting sample, and the ease of fixing both the concentration and path length.

6.4.4. The disadvantage of solution spectra is that no single solvent is satisfactory for the entire infrared region from 5000-400 cm^{-1}. The blackout regions for the common solvents are given in Table I.

6.4.5. Water is not a satisfactory solvent because it will attack the sodium chloride windows of the solution cells.

6.5. Vapors and gases.

6.5.1. High concentration vapor and gas samples may be introduced directly into a 10-cm gas cell.

6.5.2. Low concentration vapor and gas samples are run using the 20-m cells.

6.5.2.1. The reference cell is mounted in the reference beam by sliding it onto the three screws on the mounting plate and then tightening the screws.

6.5.2.2. The sample cell is mounted in the sample beam in the same manner as the reference cell.

6.5.2.3. If the sample matrix is air and the normal components of air are not being determined, open the valve to fill the reference cell with room air. If the sample matrix is not air, evacuate the reference cell and close it off from the air handling system.

TABLE I. BLACKOUT REGIONS FOR COMMON SOLVENTS

Solvent	Blackout Regions (cm^{-1})
Acetone	3100-2900, 1800-1170, 1100-1080, 910-830
Acetonitrile	3700-3500, 2350-2250, 1500-1350, 1060-1030, 930-910
Benzene	3100-3000, 1820-1800, 1490-1450, 1050-1020, 680-650
Bromoform	3100-2900, 1350-1280, 1220-1000, 880-860, 760-650
Carbon disulfide	2340-2100, 1640-1385, 875-845
Carbon tetrachloride	820-720
Chloroform	3090-2980, 1290-1155, 860-650
Cyclohexane	3000-2850, 1480-1430, 910-850
Diethyl ether	3000-2650, 1500-1010, 850-830
Dimethyl formamide	3000-2700, 1780-1020, 870-860, 680-650
Dioxane	3700-2600, 1750-1700, 1480-1030, 910-830
Isopropyl alcohol	3600-3200, 1540-1090, 990-960, 830-650
Methanol	4000-2800, 1500-1370, 1150-970, 700-650
Methyl acetate	3000-2800, 1800-1700, 1480-1360, 1300-1200, 1080-960, 840-650
Methyl cyclopentane	3000-2800, 1480-1440, 1390-1350, 980-960
Nitromethane	3100-2800, 1770-1070, 925-910, 690-650
Pyridine	3500-3000, 1620-1420, 1230-980, 780-650
Tetrachloroethylene	1370-1340, 1180-1090, 1015-650
Tetrahydrofuran	3050-2630, 1500-1425, 1375-810, 775-742

6.5.2.4. Evacuate the sample cell and close off the vacuum pump from the air handling system.

6.5.2.5. Attach the sample container to the inlet valve of the sample cell.

6.5.2.6. Open the valves and transfer the sample to the sample cell in an amount sufficient to attain atmospheric pressure in the cell. This will require approximately 7 L of gaseous sample.

6.5.2.7. If sufficient sample to attain atmospheric pressure is not available, there are two alternatives.

6.5.2.7.1. The spectrum may be run at reduced pressure, recognizing that the pressure may affect the relative intensities of the absorbances in the spectrum.

6.5.2.7.2. The alternative is to note the sample pressure and introduce room air to bring the pressure to atmospheric. Because of the dilution, the concentrations must be corrected. Interferences may be introduced, but pressure effects are eliminated.

6.5.2.8. Set the desired path length on both of the cells by means of the duodial on the end of the cells. The path length may be set from 0.75 to 20.25 m in increments of 1.5 m with the appropriate dial settings listed on the cell end. **Do not use intermediate settings because reduced sensitivity will result.**

7. Spectrophotometer Operation

7.1. Beckman IR 4240.

7.1.1. Determine that the source is operating by noting its white-hot glow.

7.1.2. No warmup time is required because the instrument is left on at all times. There is no master on-off switch except the line cord.

7.1.3. Place the sample in the sample holder and mount the sample holder in the sample compartment.

7.1.4. Activate the pen drive circuitry by pressing the button marked **PEN**.

7.1.5. Set the **GAIN** to the appropriate value. This is usually around **4** for everything except the 20-m cells where it may need to be set higher.

7.1.6. Set the **BALANCE** to **ZERO**.

7.1.7. Set the **SPEED SUPPRESSION** (sensitivity). This is usually left on **ZERO** but may be increased to provide improved resolution at high scan speeds. Little is gained by settings above 3, even at the highest scan speed.

7.1.8. Set the **PERIOD**. A **2-s** period is usually used, but a 4-s period may improve the noise in the spectrum when using the 20-m cells.

7.1.9. Set the **CHART EXPANSION** and **CHART FORMAT** to settings appropriate to the chart paper being used.

		Settings	
Chart Paper No.	Approx Size (in.)	Expansion	Format
566826	5 × 12	0.4x	IR9, 12
564999	6 × 22	1x	3
563671	10 × 28	1x	IR9, 12

7.1.10. Set the **ORDINATE SCALE** to **100%** and the **OFFSET** to **10**.

7.1.11. The wave number scale should read 4000. If not, set it to **4000** with the **WAVELENGTH ADJUST** knob.

7.1.12. Adjust the pen position with the **100% ADJUST** knob.

7.1.13. Select the **SCAN SPEED**. A scan speed of **300 cm^{-1}/min** (14 min) is usually appropriate for most samples. A scan speed of 150 cm^{-1}/min (28 min) is usually better for the 20-m cells.

7.1.14. Place the pen in the pen holder and **be certain it is set at 4000 cm^{-1}** on the chart paper.

7.1.15. Press the **SCAN** button to obtain the spectrum.

7.1.16. The instrument will stop automatically at the end of the scan. Press the **PEN** button to return it to the original conditions ready for the next scan.

NOTE: If the **PEN** button is pressed at any time during the scan, it will not return the instrument to initial conditions but will stop the scan. The scan may be continued from that point by pressing the **SCAN** button.

7.1.17. **Spectra of additional samples** can be obtained by simply exchanging sample holders (evacuating and refilling if using the 20-m cells) and pressing the **SCAN** button.

7.1.18. When finished, return the instrument to the **standby condition** by pressing the **STBY** button and removing the pen from the pen holder.

7.1.19. If the spectrum obtained is weak and no additional sample is available, **it may be expanded** by means of the **ORDINATE SCALE** knob and the **OFFSET** dial.

7.1.19.1. Set the appropriate expansion with the **ORDINATE SCALE** knob.

7.1.19.2. Set the **100%** using the **OFFSET** dial.

7.1.19.3. Run the spectrum scan as usual.

7.2. Digilab FTS-11E

7.2.1. Turn on the instrument by pushing the following switches in the order listed:

- **MASTER** switch on the **upper right corner of the control panel**,
- **POWER** switch on the **face of the Nova/4 computer**,
- **POWER** switch on the **Data General Disk Drive**,
- **POWER** switch on the **right rear of the terminal**,
- **POWER** switch on the **oscilloscope**, and
- **POWER** switch on the **digital plotter**.

7.2.2. Switch the disk drive from **LOAD** to **READY**.

7.2.3. Check that the **HIGH INTENSITY** source switch on the control panel is **ON**.

7.2.4. Wait at least 15 min for the instrument to warm up.

7.2.5. Type **100033L** on the terminal. The instrument will respond with **FILE NAME?**. (Unless otherwise noted, all instrument responses will be on the oscilloscope).

7.2.6. Press **RETURN**. Instrument will respond with **DATE (M/D/Y)?**.

7.2.7. Type the **date** in the order requested, including the slashes but not the parentheses, and **RETURN**. The instrument will respond with **TIME (H:M:S)?**.

7.2.8. Type the **time** in the order requested, using the 24-hour clock, including the colons but not the parentheses, and **RETURN**. The seconds need not be entered. The instrument will respond with **R** indicating it is in the **Data General RDOS operating system** and awaiting a command.

7.2.9. Type **IMX** and **RETURN**. The instrument will respond with **FTS-IMX RELEASE 4.42** and **READY!!** indicating the instrument is in the Digilab Interactive Multitasking Executive **(IMX)** System.

7.2.10. To set any instrument parameter, the mnemonic is typed in followed by "=". The appropriate mnemonics will be given in subsequent sections with their meanings following in parentheses. The instrument will respond with the current value of the parameter. If the current value is acceptable, press **RETURN**. If you desire to change the value, type in the new value and **RETURN**.

7.2.11. Align the interferometer.

7.2.11.1. Type **ALIGN!**. The instrument will respond with a portion of an interferogram.

7.2.11.2. Using the interferometer adjustment knobs on the control panel, adjust the interferogram so that the negative lobe is as deep and as symmetrical as possible.

7.2.11.3. Type **CONTROL A**. The instrument will return to **READY!!**.

7.2.12. Obtain a background curve.

7.2.12.1. Type **RFL** (REFERENCE FILE) = **BACKGROUND** and **RETURN**.

7.2.12.2. Type **NSS** (Number of Scans) = **64** and **RETURN**.

7.2.12.3. Type **RES** (Resolution) = **8** and **RETURN**.

7.2.12.4. Type **SCR!** (Scan Reference). The instrument will respond with **COLLECT: BACKGROUND** = N, Where N is the number of the scan it is collecting. At the end of the collection cycle, it will respond **COMPUTE: BACKGROUND** – **DP, RES** = **8** and **READY!!**.

7.2.13. Obtain a sample curve.

7.2.13.1. Place sample in the holder in the sample compartment.

7.2.13.2. Record pertinent sample data in the instrument log and obtain a new sample file number. Type **SFL** = (Sample File) and enter the **new file number**.

NOTE: It is very important that this be done before proceeding. The software contains no provision to prevent overwriting of existing files, and if a data file is overwritten, the old data is lost forever.

7.2.13.3. Type **MXY** = **100** and **RETURN**.

7.2.13.4. Type **MNY** = **0** and **RETURN**.

7.2.13.5. Type **PLM** (Plot Mode) = **T** and **RETURN**.

7.2.13.6. Type **SCN!** (Scan). The instrument will respond with **COLLECT:**, **the sample file number**, and **the number of the scan** being collected. At the completion of the scan, the instrument will respond with **COMPUTE:** and **the sample file number**. It will then plot on the oscilloscope the transmittance spectrum of the sample, with the background subtracted.

7.2.13.7. Type **CP** if the y-axis parameters are inadequate. **READY!!** will appear in the upper left of the screen. The various parameters, such as MXY and MNY, may be reset as above in 7.2.13.3. and 7.2.13.4. Type "!" when the parameters have been reset. The spectrum will be replotted with the new parameters.

7.2.14. Enter file header information.

7.2.14.1. Type **XT** (Exit). The instrument will respond with **READY!!**.

7.2.14.2. Type **CFH!** (Change File Header). The instrument will respond with **TYPE HEADER REMARKS**.

7.2.14.3. Type **HEADER REMARKS**. Multi-Line remarks of up to 169 characters may be entered. Only the first 38 characters of any line will be displayed on the oscilloscope screen. If a typing error is made, striking the **RUBOUT** key will **delete** the previous character from the header.

7.2.14.4. The end of the remarks occurs when the remarks field is filled or two **RETURNs** are typed in succession. The instrument will then respond **READY!!**

7.2.14.5. The first line of the remarks will appear as a title on plots from the digital plotter. The entire remarks can be printed on the terminal, along with other data about the file, by typing **PFH!** (Print File Header).

7.2.15. Plot out hard copy of spectrum.

7.2.15.1. Replot the spectrum to the oscilloscope screen by typing **PLT!** (Plot).

7.2.15.2. Check to see that the plotter is ready for printing. Be sure that a pen is installed, that the **REMOTE/LOCAL** switch is set for **REMOTE**, that the **PEN** switch is set for **PEN UP**, and that the paper is in position.

7.2.15.3. Properly positioned paper will have the edge of the paper within 1 cm of the front of the plotter and the pen approximately 2.5 cm from the right edge of the paper. If it is necessary to reposition the paper, change the **REMOTE/LOCAL** switch to **LOCAL** and move the paper by means of the joystick. Return the **REMOTE/LOCAL** switch to **REMOTE**.

7.2.15.4. Type **PLP1** (plot to printer 1) and **RETURN**. The plotter will completely plot a copy of the spectrum, including various sample identification parameters.

7.2.15.5. To remove the plot from the plotter, use the joystick to reposition the paper as in 7.2.15.3.

7.2.15.6. Type XT to return to the **READY!!** condition.

7.2.16. Additional samples may be run by returning to Step 7.2.13.

7.2.17. If at any time a command is given to the instrument and nothing occurs within a minute, the computer is hung up somewhere. To reactivate the computer, push **BREAK** and change the disk drive to **LOAD**. Reset the disk drive to **READY** and restart the system as in Step 7.2.5. After the instrument responds with **FILENAME?**, press **RETURN** (Step 7.2.6.). The instrument response will be **PARTITION IN USE-TYPE C TO CONTINUE**. Type **C**. The actions and responses will then be as above (Step 7.2.6. and following) until the **R** response in Step 7.2.8. At the **R** response, type **CLEAR/A/D** and **RETURN**. The instrument will again respond with **R**. At this point, the computer has been cleared, and you may continue from Step 7.2.9.

7.2.18. The system should be shut down when the last sample has been run. **It must be shut down in the proper order or loss of data and/or programs could occur.**

7.2.18.1. Type **EXIT!**. The instrument will respond with **R**.

7.2.18.2. Type **RELEASE DPO** and **RETURN**. The instrument will respond with **MASTER DEVICE RELEASED** and the oscilloscope will go blank.

7.2.18.3. Turn the following switches in the order listed:

1. Oscilloscope to Off.
2. Digital Plotter to Off.
3. Terminal to Off.
4. Disk to Load.
5. Disk Drive to Off.
6. Computer to Off.
7. Master Power to Off.

8. Calculations

8.1. The spectrophotometer measures the transmittance of the sample, but the concentration is proportional to the absorbance. Transform the measured transmittance to absorbance.

$$A = \text{LOG}\ \frac{1}{T} \quad ,$$

where A = absorbance and

T = transmittance.

8.2. The concentration may be calculated, providing the molar absorptivity is known.

$$C = \frac{A}{ab} \quad ,$$

where C = concentration,

A = absorbance,

a = absorptivity, and

b = sample thickness or path length.

8.3. The absorptivity is normally not known, and a series of standards of known concentration are used to obtain an absorbance versus concentration standard curve.

9. Source Materials

9.1. R. T. Conley, *Infrared Spectroscopy* (Allyn and Bacon, Boston, Massachusetts, 1972).

9.2. *Beckman IR 4200-Series Instruction Manual* (Beckman Instruments, Fullerton, California, 1974).

9.3. *Digilab FTS-IMX Manual* (Digilab, Cambridge, Massachusetts).

☆U.S. GOVERNMENT PRINTING OFFICE: 1989- 773-034/00230

Printed in the United States of America
Available from
National Technical Information Service
US Department of Commerce
5285 Port Royal Road
Springfield, VA 22161

Microfiche (A01)

Page Range	NTIS Price Code	Page Range	NTIS Price Code	Page Range	NTIS Price Code	Page Range	NTIS Price Code
001-025	A02	151-175	A08	301-325	A14	451-475	A20
026-050	A03	176-200	A09	326-350	A15	476-500	A21
051-075	A04	201-225	A10	351-375	A16	501-525	A22
076-100	A05	226-250	A11	376-400	A17	526-550	A23
101-125	A06	251-275	A12	401-425	A18	551-575	A24
126-150	A07	276-300	A13	426-450	A19	576-600	A25
						601-up*	A99

*Contact NTIS for a price quote.

LA-10300-M, Vol. II
Manual

Health and Environmental Chemistry: Analytical Techniques, Data Management, and Quality Assurance

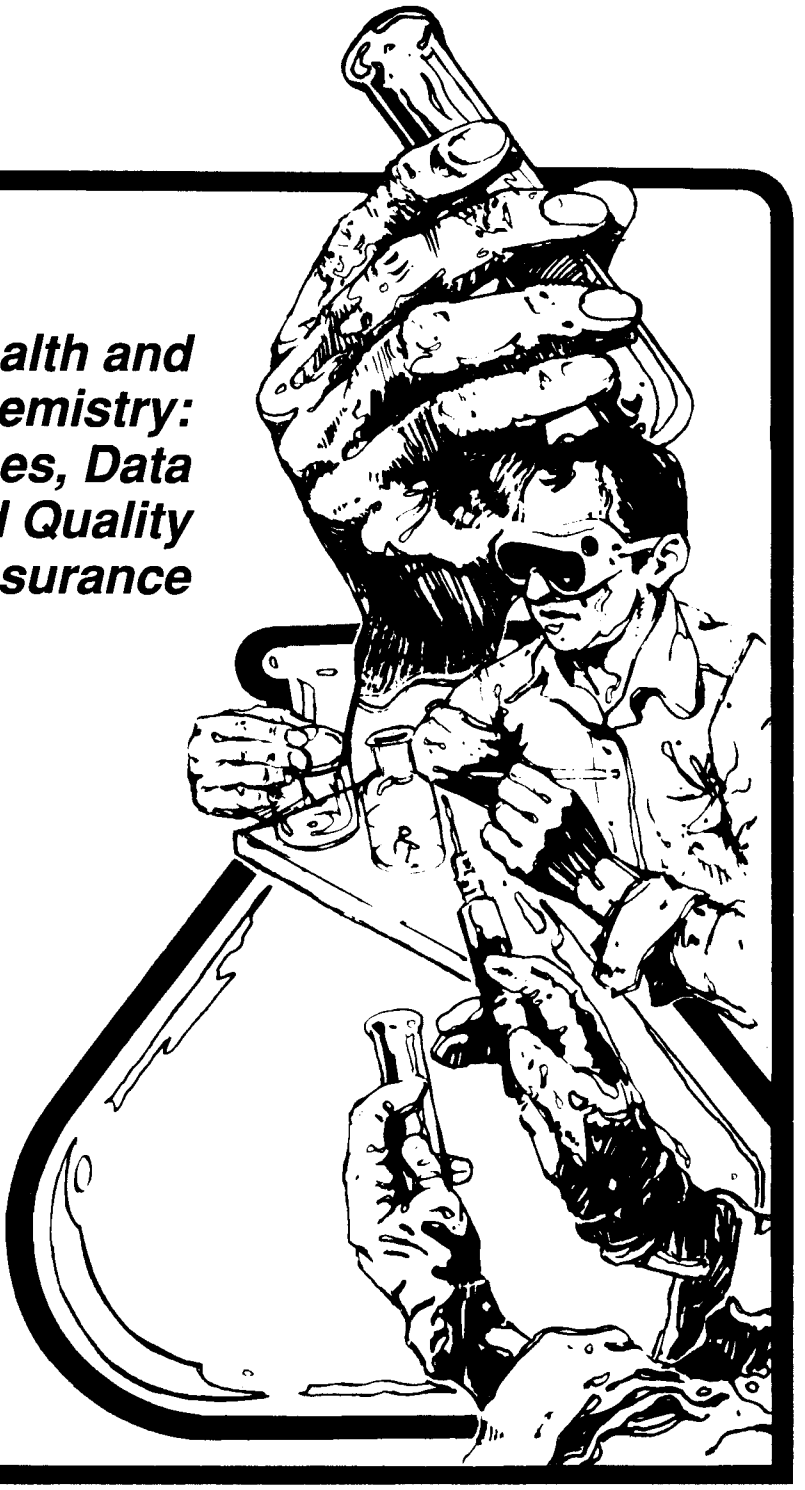

Los Alamos National Laboratory is operated by the University of California for the United States Department of Energy under contract W-7405-ENG-36.

Los Alamos
NATIONAL LABORATORY

Los Alamos, New Mexico 87545

Edited by Lori S. Tamura, Group IS-11
Composition by Liana Vigil and Elizabeth Stephens, Group EM-9
Cover art by Rod Furan, Group IS-12

An Affirmative Action/Equal Opportunity Employer

This report was prepared as an account of work sponsored by an agency of the United States Government. Neither The Regents of the University of California, the United States Government nor any agency thereof, nor any of their employees, makes any warranty, express or implied, or assumes any legal liability or responsibility for the accuracy, completeness, or usefulness of any information, apparatus, product, or process disclosed, or represents that its use would not infringe privately owned rights. Reference herein to any specific commercial product, process, or service by trade name, trademark, manufacturer, or otherwise, does not necessarily constitute or imply its endorsement, recommendation, or favoring by The Regents of the University of California, the United States Government, or any agency thereof. The views and opinions of authors expressed herein do not necessarily state or reflect those of The Regents of the University of California, the United States Government, or any agency thereof.

LA-10300-M, Vol. II
Manual

UC-907
Issued: May 1986
Revised: July 1993

Health and Environmental Chemistry: Analytical Techniques, Data Mangement, and Quality Assurance

Edited by Margaret A. Gautier

Los Alamos
NATIONAL LABORATORY
Los Alamos, New Mexico 87545

CONTENTS
(Vol. II)

ENVIRONMENTAL CHEMISTRY

Environmental Chemistry

CONTENTS

Preface E-7

Acknowledgments E-9

Abstract E-11

The page numbering convention used in this manual consists of the specific procedure number (shown at left in list below) followed by the page number for that procedure. Thus, ER110-2 is page two of procedure ER110. The right column in the list below gives each procedure's status or effective date.

Environmental Chemistry Analytical Techniques

Environmental Analytical Procedures - Inorganic

EI100 Arsenic in Water and Soil Extracts—Graphite Furnace AA 02/92

EI105 Barium in Water and Soil Extracts—Flame AA 09/92

EI120 Cadmium in Water and Soil Extracts—Graphite Furnace AA 02/92

EI125 Calcium in Water and Soil Extracts—Flame AA 09/92

EI130 Chromium in Oil, Water, and Soil Extracts—Flame AA 09/92

EI135 Chromium in Water and Soil Extracts—Graphite Furnace AA 02/92

EI140 Copper in Water and Soil Extracts—Flame AA 09/92

EI145 Iron in Water and Soil Extracts—Flame AA 09/92

EI150 Lead in Water and Soil Extracts—Graphite Furnace AA 02/92

EI160 Magnesium in Water and Soil Extracts—Flame AA 09/92

EI165 Mercury in Water—Cold Vapor AA 09/92

EI170 Nickel in Water and Soil Extracts—Flame AA 09/92

EI175	Potassium in Water and Soil Extracts—Flame AA	09/92
EI185	Selenium in Water and Soil Extracts—Graphite Furnace	02/92
EI190	Silver in Water and Soil Extracts—Flame AA	09/92
EI195	Sodium in Water and Soil Extracts—Flame AA	09/92
EI200	Thallium on Filters—Graphite Furnace AA	02/92
EI205	Thallium in Water and Soil Extracts—Graphite Furnace AA	02/92
EI210	Zinc in Water and Soil Extracts—Flame AA	09/92
EI300	Barium in Soils—Acid Digestion and ICPAES	Retired
EI400	Anions in Water and Waste Water—IC	06/92
EI520	pH of Soil	10/91
EI630	Arsenic, Antimony, Tungsten, and Molybdenum in Silicates—RENA	Retired
EI730	Mercury in Environmental Materials—Cold Vapor Gold Film Analyzer	10/90
EI735	Sample Preparation for Spectrochemical Analyses of Total Recoverable Elements (EPA Method 200.2)	12/90
EI790	Water (Bound and Unbound) in Geological Matrices—High Temperature Coulometry	Retired

Environmental Analytical Procedures—Organic

EO400	Polychlorinated Biphenyls (PCBs) in Oil: Solvent Extraction—GC/ECD	03/93
EO410	Polychlorinated Biphenyls (PCBs) in Soil: Solvent Extraction—GC/ECD	03/93
EO420	Polychlorinated Biphenyls (PCBs) in Swipes: Solvent Extraction—GC/ECD	03/93
EO430	Polychlorinated Biphenyls (PCBs) in Water: Solvent Extraction—GC/ECD	03/93

EO500	Semivolatile Organics in Solid Matrices: Solvent Extraction—GC/MS	05/93
EO530	Semivolatile Organics in Aqueous Matrices: Solvent Extraction—GC/MS	05/93
EO720	Volatile Organic Compounds in Soil and Sediment: Capillary Column Technique—GC/MS (EPA SW846 Method 8260)	05/93
EO730	Volatile Organic Compounds in Water: Precision Dynatech Autosampler Capillary Column Technique—GC/MS (EPA SW846 Method 8260)	05/93

Environmental Analytical Procedures — Radiochemical

ER100	Gross Alpha and Beta Activity in Environmental Matrices—Gas-Flow Proportional Counting	04/92
ER110	Americium-241 in Environmental Matrices (Greater than 2-Gram Samples)—Alpha Spectrometry	02/93
ER120	Americium-241 in Environmental Matrices (Less than 2-Gram Samples)—Alpha Spectrometry	08/92
ER130	Gamma-Ray-Emitting Nuclides in Environmental Matrices—Instrumental Method	04/93
ER140	Qualitative Gamma-Ray Scan of Environmental Matrices	04/93
ER150	Gross Gamma in Environmental Matrices	03/91
ER160	Plutonium in Environmental Matrices—Alpha Spectrometry	04/93
ER165	Plutonium in Sediment (Kilogram Samples)	In Progress
ER170	Radium-226 in Geologicals—Gamma-Ray Spectrometry	04/91
ER180	Radium-226 in Water—Radon Emanation	04/93
ER190	Strontium-90 in Environmental Matrices	08/92
ER200	Thorium-230 in Geologicals—Alpha Spectrometry	05/91
ER210	Tritium in Environmental Matrices—Distillation Procedure	06/92

ER230	Uranium-235/Uranium-238 Ratio in Geologicals and Natural Waters—RTNA	Retired
ER240	Uranium in Air Filters—DNA	05/91
ER250	Uranium in Biological Matrices—DNA	06/91
ER260	Uranium in Geologicals—DNA	05/91
ER270	Uranium in Water—DNA	05/91
ER290	Total Uranium and $^{235}U/^{238}U$ Ratio in Water—ICPMS	02/91
ER300	Depleted Uranium in Soils—IENA	Retired

Mobile Laboratory Analytical Techniques

Mobile Laboratory Analytical Procedures—Organic

MLO274	Petroleum Hydrocarbons, Total Recoverable in Soil—Mobile Laboratory Method	04/93
MLO410	Polychlorinated Biphenyls (PCBs) in Soil—Mobile Laboratory Method	03/93
MLO500	Semivolatile Organics in Solid Matrices: Solvent Extraction-GC/MS—Mobile Laboratory Method	04/93
MLO510	Extraction of Semivolatile Organic Analytes in Solid Matrices for Analysis by GC/MS—Mobile Laboratory Method	04/93
MLO720	Volatile Organic Compounds in Soil Sediment—Mobile Laboratory Method	04/93

Mobile Laboratory Analytical Procedures—Radiochemical

MLR100	Gross Alpha/Beta Screening of Silicates—Mobile Laboratory Method	02/93
MLR200	Gross Gamma Screening of Silicates—Mobile Laboratory Method	02/93

MLR300 Gross Tritium Analysis of Silicates—
Mobile Laboratory Method 02/93

MLR400 Gross Moisture Analysis of Silicates—
Mobile Laboratory Method 02/93

PREFACE

Los Alamos National Laboratory supports an ongoing environmental surveillance program as required by US Department of Energy Order 5400.1, "General Environmental Protection Program" (November 1988). This surveillance program involves routine monitoring for radiation, radioactive materials, and hazardous chemical substances on Laboratory sites and in the surrounding region. Decisions that must be made regarding environmental compliance depend upon the availability of sound analytical data.

An important tool for evaluating the environment is the analytical method. The analytical methods used by Environmental Chemistry Group (EM-9) support the monitoring activities by documenting compliance with appropriate standards, identifying trends, providing information for the public, and contributing to general environmental knowledge. These methods measure the concentration of the desired analytes with the precision, accuracy, and specificity required by environmental surveillance and compliance personnel.

This section of the manual presents EM-9's environmental chemistry procedures, and is thus part of the overall quality control documentation effort to support the environment, safety, and health programs of the Laboratory. These analytical procedures were developed by the staff of EM-9 or were modified from methods developed and evaluated by the Environmental Protection Agency and others for use with environmental samples. Each procedure is presented in a simple and concise manner. We hope that any competent analyst will be able to use these written procedures.

ACKNOWLEDGMENTS

The encouragement, leadership, and support offered by group EM-9 management are appreciated. The general contributions of the following individuals in developing, evaluating, or writing the methods contained herein are formally acknowledged:

Daryl Knab, Radiochemistry Section Leader
Charles Apel, Inorganic Section Leader
George H. Brooks
Yolanda Giles
Barbara J. Hemberger
Janet D. Morgan
Harry P. Patterson
Richard J. Peters

The section is prepared in loose-leaf form to facilitate revisions of the procedures and the inclusion of additional procedures or data sheets. Requests for clarification or for help in resolving difficulties while using the procedures are welcome.

Margaret A. Gautier
Editor

Environmental Chemistry
Analytical Techniques

Edited by

Margaret A. Gautier

ABSTRACT

This section of the manual has been prepared to document the analytical methodology used by the Los Alamos National Laboratory Environmental Chemistry Group for environmental analyses. It is part of the overall quality control effort to support the environment, safety, and health programs of the Laboratory. The analytical procedures were either developed by the Environmental Chemistry staff, modified from standard methods developed and evaluated by the Environmental Protection Agency, or adapted from procedures found in the literature and have been tested by chemists and technicians to show their validity. The methods measure the concentration of the desired analytes with the precision, accuracy, and specificity required by environmental surveillance and compliance personnel. The procedures utilize equipment and skills available in modern analytical laboratories. Precision and accuracy statements are provided where such data are available. Each procedure is presented in a simple and concise manner and includes interferences, apparatus, reagent preparation, calibration methods, and data reduction formulas.

ARSENIC IN WATER AND SOIL EXTRACTS — GRAPHITE FURNACE AA

Analyte: Arsenic	**Method No.:** EI100
Matrix: Water, waste water, and soil extracts	**Detection Limit:** 2.0 μg/L
Procedure: Graphite furnace atomic absorption	**Accuracy and Precision:** 102% ± 1.02% RSD
Effective Date: 09/25/91	**Authors:** Michael G. Bell Barbara J. Hemberger

SAFETY NOTE: Before beginning this procedure, read all of the Material Safety Data Sheets for the chemicals listed in Sec. 6. Read Sec. 4.3 of the EM-9 Safety Manual for information on personal protective clothing and equipment.

1. Principle of Method

1.1. This procedure is based on Environmental Protection Agency (EPA) method 206.2 and SW846 method 7060.

1.2. Arsenic in solution may be readily determined by graphite furnace atomic absorption spectroscopy. The method is applicable to As in drinking, surface, and saline waters and in domestic and industrial wastes.

1.3. Drinking water free of particulate matter may be analyzed directly. Ground water, other aqueous samples, TCLP extracts, industrial wastes, soils, sludges, sediments, and other solid wastes require digestion before analysis.

2. Accuracy and Precision

2.1. The determination of arsenic in 19 in-house quality control samples (55 μg/L) over an 8-month period had a mean of 56.3 μg/L and a relative standard deviation (RSD) of 1.02%.

3. Collection and Storage of Samples.

3.1. Preserve samples with nitric acid (HNO_3) at a pH <2.0. Complete analysis within 6 months.

4. Interferences

4.1. Contamination is of prime concern during sample preparation. Periodically clean the work area, including the bench top, to eliminate environmental contamination. Use acid-washed sample cups in the autosampler.

4.2. Chemical interferences can be controlled by the addition of a matrix modifier to all samples and standards. Refer to Perkin-Elmer chart 0993-8199 Rev. D (11/89), or to the PE Methods of Analysis for AAS, for the appropriate matrix modifier.

4.3. Silica from the glassware will grow into the sample solution during and following sample processing. To control this problem, use disposable sterile 50-mL polypropylene centrifuge tubes in the sample digestion steps.

5. Apparatus

5.1. Centrifuge tubes: 50-mL, sterile polypropylene.

5.2. Rainin pipettes with disposable tips.

5.3. Wash bottles: 125-mL, polypropylene, screw tops.

5.4. Hot plate: with aluminum heating block drilled to hold centrifuge tubes.

5.5. Perkin-Elmer 5000 atomic absorption instrument: equipped with a Zeeman graphite furnace or equivalent.

5.6. Required gas for the instrument is ultrapure argon.

6. Reagents

6.1. Nitric acid (low-temperature redistilled acid, LTRD).

6.2. Hydrochloric acid (low-temperature redistilled acid, LTRD).

6.3. Double-deionized water.

6.4. ASTM Type I water (>10 MΩ/cm resistivity, <0.1 μmho/cm conductivity).

6.5. Appropriate matrix modifier for all samples, standards, and QCs.

6.6. Secondary standards for making the appropriate standard curves.

7. Sample Preparation Procedure

7.1. To determine total recoverable elements in water, waste water, and soil extracts, take a 50-mL aliquot from an acid-preserved sample containing not more than 0.25% (wt/vol) total solids. Place the aliquot in a sterile 50-mL disposable polypropylene centrifuge tube.

7.1.1. Add 500 μL of LTRD HNO_3 and 250 μL of Ultrex or LTRD HCl to each sample.

7.1.2. Heat on a hot plate without boiling (approximately 85°C) until the volume is reduced to 5-10 mL.

7.1.3. Loosely cover the tube with the cap and reflux for 30 min.

7.1.4. Allow the sample to cool and dilute to 50 mL with ASTM Type I water.

7.1.5. Run one digested blank and one digested spike for each digested batch.

7.1.6. Run a duplicate and a spike for 10-20% of the samples.

7.1.7. For TCLP samples, run a spike for every sample and 20% duplicates.

7.1.8. The analysis should be performed before the EPA regulatory holding times expire.

7.1.9. Add sample and standards to acid-cleaned sample cups.

8. Instrument Procedure

8.1. Instrument power and gases check.

8.1.1. Turn the **POWER SWITCH** on the PE5000 Atomic Absorption (AA) to **ON**.

8.1.2. Turn **ON** the argon supply valve after checking the pressure at the tank. Pressure must be over 100 psi or the tank must be changed.

8.1.3. Turn the AA switch from **STANDBY** mode to **RUN**.

8.1.4. Make sure the exhaust hood over the graphite furnace is functioning.

8.2. Instrument setup.

8.2.1. Insert the arsenic lamp into the turret oriented toward the ETVAA and plug it in.

8.2.2. Enter **turret lamp number** into keyboard.

8.2.3. Enter recommended **lamp milliamps** (mA) or **watts** depending on lamp type (EDL/HCL).

8.2.3.1. Warm up the EDL and/or HCL lamp for at least 20 min.

8.2.4. Enter **lamp slit width** using **LOW SLIT** key for ETVAA.

8.2.5. Enter **lamp wavelength** using **LAMBDA PEAK** key.

8.2.6. Turn AA switch inside lamp housing to **ICP/ZAA** position.

8.3. Keyboard setup.

8.3.1. Set **SIGNAL** key to **PK AREA** (peak area).

8.3.2. Turn **REC ABS** (record absorbance) signal key **ON**.

8.3.3. Enter **AVG** (average) number (if used).

8.3.4. Enter **CONC MODE** (concentration).

8.4. Furnace setup.

8.4.1. Press **ZAA** key.

8.4.2. Turn **ACCESSORY** knob to **ON** position.

8.4.3. Turn chiller **ON** and check that the water level is above the coils.

8.4.4. Check that the water bottle for distilled water rinse on the autosampler is full.

8.4.5. Turn **ON** the HGA-500 programmer.

8.4.5.1. Enter the temperature program for the element from the ETVAA procedure manual and store the procedure number.

8.5. Computer setup.

8.5.1. Turn PE AA Data System 10 computer **master switch** to **ON**.

8.5.2. Set up ID/WT file.

8.5.3. Turn **print button** on PE5000 keyboard **ON** and store the program.

8.6. Set up autosampler.

8.6.1. Recalibrate the standard curve every 8 to 12 samples.

8.6.2. Enter the number of standards (# stds).

8.6.3. Enter the last sample number (last samp).

8.6.4. Enter the sample volume (samp vol).

8.6.5. Enter the alternate volume (alt vol) for the matrix modifier if used.

8.6.6. Enter the instrument program number (inst prog).

8.6.7. Enter the HGA program number (HGA prog).

8.7. Graphite furnace setup.

8.7.1. Open the furnace and clean or replace the graphite tube. Use the tube with or without the platform depending on the element.

8.7.2. If inserting a new tube, condition it with the manual temperature key.

8.7.3. Using the alignment tool, reinsert the graphite tube and close the furnace.

8.7.4. Using the manual temperature key, set the pyrometer to the atomization temperature of the element and balance the lights (red/green) using the calibration (CAL) knob.

8.7.5. Place the AS40 in **STANDBY** mode and align the autosampler arm. Check the depth of the sample delivery inside the tube and inside the samples. Exit **STANDBY** mode.

8.7.6. Remove and check the furnace lenses. Reinsert the lenses and check the absorbance. If the absorbance reads above 0.100, clean the lenses.

8.7.7. Put samples and standards into the autosampler tray and cover with the dust cover to prevent contamination.

8.7.8. Put the matrix modifier in the holder position, if required.

8.7.9. Check the blank and standards manually.

8.7.10. Calculate the characteristic concentration (cc). If it is within ±20% of chart value (0993-8199 Rev. D 11/89) start the run.

8.7.11. Enter **collect data** mode on PE Data System 10 computer and follow instructions.

8.7.12. After run is complete, press to **DISK** key on PE Data System 10 **twice**.

8.7.13. Select **report** mode on the computer, follow instructions, and print out the final report.

8.7.14. When finished, shut off the chiller, argon gas supply, lamps, EDL power supply, and computer.

8.7.15 Place the autosampler, HGA Programmer, and PE5000 in standby mode.

9. Emergency Shutdown Procedure

9.1. In case of power failure, turn **POWER SWITCH** on PE5000 AA to **OFF**.

9.2. Turn **off** the **gas valves**.

9.3. Follow building power failure procedures.

10. Calculations

10.1. Characteristic concentration (cc).

$$cc = \frac{C \times V \times 0.0044}{A_s},$$

where cc = characteristic concentration for ETVAA,
C = concentration of standard, (μg/L)
V = sample aliquot, (μL)
A_s = absorbance of standard, and
0.0044 = 1% absorbance.

11. Source Material

11.1. *Analytical Methods for Atomic Absorption Spectrophotometry*, (Perkin-Elmer, Norwalk, Conn., 1976).

11.2. *Instructions: Zeeman/5000 System*, (Perkin-Elmer, Norwalk, Conn., 1982).

11.3. Methods for Chemical Analysis of Water and Wastes, EPA-600/4-79-020 U.S. Environmental Protection Agency (rev. March 1983).

11.4. Perkin-Elmer chart 0993-8199 Rev. D (11/89).

11.5. "Test Methods for Evaluation of Solid Waste: Laboratory Manual of Physical and Chemical Methods," EPA report no. SW-846 (November 1986).

BARIUM IN WATER AND SOIL EXTRACTS — FLAME AA

Analyte: Barium	**Method No.:** EI105
Matrix: Water, waste water, and soil extracts	**Detection Limit:** 100 μg/L
Procedure: Flame atomic absorption	**Accuracy and Precision:** 100% ± 1.0% RSD
Effective Date: 09/23/91	**Authors:** Michael G. Bell Barbara J. Hemberger

SAFETY NOTE: Before beginning this procedure, read all of the Material Safety Data Sheets for the chemicals listed in Sec. 6. Read Sec. 4.3 of the EM-9 Safety Manual for information on personal protective clothing and equipment. Read Sec. 11 of this procedure and Source Material 12.5 for proper waste disposal practices.

1. Principle of Method

1.1. This procedure is based on Environmental Protection Agency (EPA) method 208.1 and SW-846 method 7080.

1.2. Barium in solution may be readily determined by atomic absorption spectroscopy (AAS). The method is simple and rapid and is applicable to Ba in drinking, surface, and saline waters and in domestic and industrial wastes.

1.3. Drinking water free of particulate matter may be analyzed directly. Ground water, other aqueous samples, TCLP extracts, industrial wastes, soils, sludges, sediments, and other solid wastes require digestion prior to analysis.

2. Accuracy and Precision

2.1. The determination of barium in four in-house quality control samples (400 μg/L) over a three-month period had a mean of 397.5 μg/L and a relative standard deviation (RSD) of 1.0%.

3. Collection and Storage of Samples

3.1. Preserve samples with nitric acid (HNO_3) at a pH <2.0. Complete analysis within six months.

4. Interferences

4.1. Contamination is of prime concern during sample preparation. The work area, including the bench top, should be periodically cleaned to eliminate environmental contamination.

4.2. Chemical interferences can be controlled by the addition of KCl, a matrix modifier, to all samples and standards at high concentration levels (1.0%).

4.3. Silica from the glassware will grow into the sample solution during and following sample processing. Use sterile disposable 50-mL polypropylene centrifuge tubes in the sample digestion steps to control this problem.

5. Apparatus

5.1. Centrifuge tubes: 50-mL, sterile polypropylene.

5.2. Rainin pipettes with disposable tips.

5.3. Wash bottles: 125-mL, polypropylene, screw tops.

5.4. Hot plate: with aluminum heating block drilled to hold centrifuge tubes.

5.5. Perkin-Elmer 5000 atomic absorption spectrometer or equivalent.

5.6. Gases for the above instrument: air, acetylene, nitrous oxide, argon.

6. Reagents

6.1. Nitric acid (low-temperature redistilled acid, LTRD).

6.2. Hydrochloric acid (low-temperature redistilled acid, LTRD).

6.3. Double-deionized water.

6.4. Potassium chloride. Matrix modifier for all samples and standards.

6.5. ASTM Type I water (>10 MΩ/cm resistivity, <0.1 μmho/cm conductivity).

7. Sample Preparation Procedure

7.1. To determine total recoverable elements in water or waste water, take a 50-mL aliquot from an acid-preserved sample containing not more than 0.25% (wt/vol) total solids. Place the aliquot in a sterile disposable 50-mL polypropylene centrifuge tube.

7.1.1. Add 500 μL of LTRD HNO_3 and 250 μL of Ultrex or LTRD HCl to each sample.

7.1.2. Heat on a hot plate without boiling (approximately 85°C) until the final volume is reduced to 5-10 mL.

7.1.3. Loosely cover the tube with the cap and reflux for 30 min.

7.1.4. Allow the sample to cool and dilute to 50 mL with ASTM Type I water.

7.1.5. Run one digested blank and one digested spike with each digested batch.

7.1.6. Run a duplicate and a spike for 10-20% of the samples.

7.1.7. For TCLP samples, run a spike for every sample and run 20% duplicates.

8. Instrument Procedure

8.1. Power instrument and check gases.

8.1.1. Turn the **POWER** switch on the Perkin-Elmer (PE) 5000 atomic absorption (AA) spectrometer to **ON**.

8.1.2. Turn the **POWER** switch on the PE 5000 automatic burner control to **ON**.

8.1.3. Turn the **AIR SUPPLY** valve **ON**.

8.1.4. Check the pressure in the acetylene tank; if it is <100 psi, change the tank. Turn the **ACETYLENE SUPPLY** valve **ON**.

8.1.5. Turn the **NITROUS OXIDE SUPPLY** valve **ON**, if necessary.

8.1.6. Turn the AA switch from **STANDBY** mode to **RUN**.

8.1.7. Make sure the exhaust hood is functioning.

8.1.8. Make sure the fluids in the drain vessel and drain loop are at their proper levels.

8.2. Instrument setup.

8.2.1. Insert the barium lamp in the turret and plug it in.

8.2.2. Enter the **turret lamp number** on the keyboard.

8.2.3. Enter the recommended **lamp milliamps** (mA).

8.2.4. Enter the **lamp slit width** using the **HIGH SLIT** key for flame AA.

8.2.5. Enter the **lamp wavelength** using the **LAMBDA PEAK** key.

8.2.6. For **signal keys**, enter the **CONTINUOUS** key for setup.

8.2.7. Press the **RECORD ABSORBANCE** key.

8.2.8. Set the **MODE** key to **ABSORBANCE**.

8.2.9. If the wavelength is >300 nm, use the **AA-MODE** key.

8.2.10. If the wavelength is <300 nm, use the **AA-BG MODE** key.

8.2.11. Press the **SETUP** key and adjust the lamp for maximum absorbance.

8.2.11.1. If the absorbance is >80, press the **GAIN** key and continue the lamp adjustment.

8.2.11.2. When the maximum absorbance is reached, turn the **SETUP** key to **OFF**.

8.2.12. Set the **TIME** key to 0.5 s.

8.2.13. Press the **AZ** (autozero) key. Absorbance should read zero.

8.2.14. Install the 10-cm burner head for air-acetylene analysis and the 5-cm head for nitrous oxide-acetylene.

8.2.15. Adjust the burner head height.

8.2.16. Set oxidant and acetylene flow from Table 8.2 in PE *Analytical Methods for AAS*. (source material 12.1).

8.2.17. Shut the burner shield door and light the flame using the flame **ON/OFF** key on the burner assembly.

8.2.18. Aspirate double-deionized water while the flame is lit.

8.2.19. Aspirate the standard and adjust the instrument for maximum absorbance.

8.3. Running samples.

8.3.1. Enter S1, S2, and S3 as directed for standards in *Analytical Methods for AAS*.

8.3.2. Reset **TIME** key to 3 to 6 s.

8.3.3. Press the signal **HOLD** key.

8.3.4. Select **AVERAGE** key if desired.

8.3.5. Aspirate the known standard and press the **READ** key.

8.3.6. Calculate the characteristic concentration (cc). The result should be within ±20% of the value in *Analytical Methods for AAS*.

8.3.7. Aspirate the calibration-curve standards and read the absorbance.

8.3.8. Switch the **MODE** key to **CONC** (concentration).

8.3.9. Aspirate the standards to set concentration keys as needed.

8.3.10. Read samples and QCs (blind and known).

8.3.11. Recalibrate the instrument with standards every 8 to 12 readings.

8.3.12. When finished, switch the flame **ON/OFF** key to **OFF**. Press the **CHECK FLOW** key on the auto burner control twice to relieve line pressure.

8.3.13. Turn the **POWER** switch on the automatic burner control to **OFF**.

8.3.14. Switch the PE 5000 to **STANDBY** mode.

9. Emergency Shutdown Procedure

9.1. In case of power failure, turn the **POWER** switch on the PE 5000 to **OFF**.

9.2. Turn the gas valves **OFF**.

9.3. Follow procedures for building power failure.

10. Calculations

10.1. Characteristic concentration (cc).

$$cc = \frac{C \times 0.0044}{A_s},$$

where cc = characteristic concentration for flame AA,
C = concentration of standard,
0.0044 = 1% absorbance, and
A_s = absorbance of standard.

11. Proper Waste Disposal Practices

11.1. Solid Waste

11.1.1. Solid waste contaminated with hazardous chemicals above the level of concern is not generated during the routine preparation of QC samples for analysis for inorganic contaminants.

11.1.2. If a solid waste is generated that may be contaminated at a level of concern, the appropriate paperwork is completed on a case-by-case basis.

11.1.2.1. A Waste Profile Request Form (WPRF) describing the solid waste is completed and sent to the Waste Management Group for review.

11.1.2.2. If the Waste Management Group determines that the solid waste is contaminated below the level of concern, the waste is disposed of as ordinary laboratory trash.

11.1.2.3. If the Waste Management Group determines that the solid waste is contaminated above the level of concern, pickup of the contaminated waste is requested as described in Sec. 9.3.

11.2. Liquid Waste

11.2.1. Liquid waste containing hazardous contaminants, such as solutions of trace metals, is accumulated in a coated glass jar in a secondary containment tray and is kept segregated from liquid waste contaminated with organic or radioactive substances or cyanide.

11.2.2. The bottle is labeled with a hazardous waste label and a label indicating its use for trace-metal waste.

11.2.3. The bottle is opened only for the period of time necessary to add waste to it.

11.2.4. When the bottle is full, it is capped and kept in the secondary containment tray pending pickup by the Waste Management Group.

11.2.5. A new bottle is labeled for further use.

11.3. Waste Pickup

11.3.1. Pickup by the Waste Management Group of solid waste or a full bottle of liquid waste containing trace metals is requested using the current

Chemical Waste Disposal Request Form (CWDR). The current Waste Profile Request Form (WPRF) that describes the waste is referenced on the CWDR.

11.3.2. The Waste Management Group picks up the waste for disposal in accord with Laboratory policy.

12. Source Materials

12.1. Perkin-Elmer Corp., *Analytical Methods for Atomic Absorption Spectroscopy* (Norwalk, CT, 1976).

12.2. Perkin-Elmer Corp., *Instructions: Zeeman/5000 System* (Norwalk, CT, 1982).

12.3. U.S. Environmental Protection Agency, "Methods for Chemical Analysis of Water and Wastes," EPA-600/4-79-020 (rev. March 1983).

12.4. U.S. Environmental Protection Agency, "Test Methods for Evaluation of Solid Waste: Laboratory Manual of Physical and Chemical Methods," SW-846 (Nov. 1986).

12.5. "Chemical, Hazardous, and Mixed Waste," Administrative Requirement 10-3, Chapter 1 in Los Alamos National Laboratory *Environment, Safety, and Health Manual* (most recent edition).

CADMIUM IN WATER AND SOIL EXTRACTS – GRAPHITE FURNACE AA

Analyte: Cadmium	**Method No.:** EI120
Matrix: Water, waste water, and soil extracts	**Detection Limit:** 0.1 μg/L
Procedure: Graphite furnace atomic absorption	**Accuracy and Precision:** 102% ± 1.02% RSD
Effective Date: 09/25/91	**Authors:** Michael G. Bell Barbara J. Hemberger

SAFETY NOTE: Before beginning this procedure, read all of the Material Safety Data Sheets for the chemicals listed in Sec. 6. Read Sec. 4.3 of the EM-9 Safety Manual for information on personal protective clothing and equipment.

1. Principle of Method

1.1. This procedure is based on Environmental Protection Agency (EPA) method 213.2 and SW846 method 7130.

1.2. Cadmium in solution may be readily determined by graphite furnace atomic absorption spectroscopy. The method is applicable to Cd in drinking, surface, and saline waters and in domestic and industrial wastes.

1.3. Drinking water free of particulate matter may be analyzed directly. Ground water, other aqueous samples, TCLP extracts, industrial wastes, soils, sludges, sediments, and other solid wastes require digestion before analysis.

2. Accuracy and Precision

2.1. The determination of cadmium in 15 in-house quality control samples (5.8 μg/L) over an 8-month period had a mean of 5.9 μg/L and a relative standard deviation (RSD) of 1.02%.

3. Collection and Storage of Samples.

3.1. Preserve samples with nitric acid (HNO_3) at a pH <2.0. Complete analysis within 6 months.

4. Interferences

4.1. Contamination is of prime concern during sample preparation. Periodically clean the work area, including the bench top, to eliminate environmental contamination. Use acid-washed sample cups in the autosampler.

4.2. Chemical interferences can be controlled by the addition of a matrix modifier to all samples and standards. Refer to Perkin-Elmer chart 0993-8199 Rev. D (11/89), or to the PE Methods of Analysis for AAS for the appropriate matrix modifier.

4.3. Silica from the glassware will grow into the sample solution during and following sample processing. To control this problem, use disposable sterile 50-mL polypropylene centrifuge tubes in the sample digestion steps.

5. Apparatus

5.1. Centrifuge tubes: 50-mL, sterile polypropylene.

5.2. Rainin pipettes with disposable tips.

5.3. Wash bottles: 125-mL, polypropylene, screw tops.

5.4. Hot plate: with aluminum heating block drilled to hold centrifuge tubes.

5.5. Perkin-Elmer 5000 atomic absorption instrument: equipped with a Zeeman graphite furnace or equivalent.

5.6. Required gas for the above instrument is ultrapure argon.

6. Reagents

6.1. Nitric acid (low-temperature redistilled acid, LTRD).

6.2. Hydrochloric acid (low-temperature redistilled acid, LTRD).

6.3. Double-deionized water.

6.4. ASTM Type I water (>10 MΩ/cm resistivity, <0.1 μmho/cm conductivity).

6.5. Appropriate matrix modifier for all samples, standards, and QC's.

6.6. Secondary standards for making the appropriate standard curves.

7. Sample Preparation Procedure

7.1. To determine total recoverable elements in water, waste water, and soil extracts, take a 50-mL aliquot from an acid-preserved sample containing not more than 0.25% (wt/vol) total solids. Place the aliquot in a sterile 50-mL disposable polypropylene centrifuge tube.

7.1.1. Add 500 μL of LTRD HNO_3 and 250 μL of Ultrex or LTRD HCl to each sample.

7.1.2. Heat on a hot plate without boiling (approximately 85°C) until the volume is reduced to 5-10 mL.

7.1.3. Loosely cover the tube with the cap and reflux for 30 min.

7.1.4. Allow the sample to cool, and dilute to 50 mL with ASTM Type I water.

7.1.5. Run one digested blank and one digested spike for each digested batch.

7.1.6. Run a duplicate and a spike for 10-20% of the samples.

7.1.7. For TCLP samples, run a spike for every sample and 20% duplicates.

7.1.8. The analysis should be performed before the EPA regulatory holding times expire.

7.1.9. Add sample and standards to acid-cleaned sample cups.

8. Instrument Procedure

8.1. Instrument power and gases check.

8.1.1. Turn the **POWER SWITCH** to the PE5000 Atomic Absorption (AA) to **ON**.

8.1.2. Turn **ON** the argon supply valve after checking the pressure at the tank. Pressure must be over 100 psi or the tank must be changed.

8.1.3. Turn the AA switch from **STANDBY** mode to **RUN**.

8.1.4. Make sure the exhaust hood over the graphite furnace is functioning.

8.2. Instrument setup.

8.2.1. Insert the cadmium lamp into the turret oriented toward the ETVAA and plug it in.

8.2.2. Enter **turret lamp number** into keyboard.

8.2.3. Enter recommended **lamp milliamps** (mA) or **watts** depending on lamp type (EDL/HCL).

8.2.3.1. Warm up the EDL and/or HCL lamp for at least 20 min.

8.2.4. Enter **lamp slit width** using **LOW SLIT** key for ETVAA.

8.2.5. Enter **lamp wavelength** using **LAMBDA PEAK** key.

8.2.6. Turn AA switch inside lamp housing to **ICP/ZAA** position.

8.3. Keyboard setup.

8.3.1. Set **SIGNAL** key to **PK AREA** (peak area).

8.3.2. Turn **REC ABS** (record absorbance) signal key **ON**.

8.3.3. Enter **AVG** (average) number (if used).

8.3.4. Enter **CONC MODE** (concentration).

8.4. Furnace setup.

8.4.1. Press **ZAA** key.

8.4.2. Turn **ACCESSORY** knob to **ON** position.

8.4.3. Turn chiller **ON** and check that the water level is above the coils.

8.4.4. Check that the water bottle for distilled water rinse on the autosampler is full.

8.4.5. Turn **ON** the HGA-500 programmer.

8.4.5.1. Enter the temperature program for the element from the ETVAA procedure manual and store the procedure number.

8.5. Computer setup.

8.5.1 Turn PE AA Data System 10 computer **master switch** to **ON**.

8.5.2 Set up ID/WT file.

8.5.3 Turn **print button** on PE5000 keyboard **ON** and store the program.

8.6. Set up autosampler.

8.6.1. Recalibrate the standard curve every 8 to 12 samples.

8.6.2. Enter the number of standards (# stds).

8.6.3. Enter the last sample number (last samp).

8.6.4. Enter the sample volume (samp vol).

8.6.5. Enter the alternate volume (alt vol) for the matrix modifier if used.

8.6.6. Enter the instrument program number (inst prog).

8.6.7. Enter the HGA program number (HGA prog).

8.7. Graphite furnace setup.

8.7.1. Open the furnace and clean or replace the graphite tube. Use the tube with or without the platform depending on the element.

8.7.2. If inserting a new tube, condition it with the manual temperature key.

8.7.3. Using the alignment tool, reinsert the graphite tube and close the furnace.

8.7.4. Using the manual temperature key, set the pyrometer to the atomization temperature of the element and balance the lights (red/green) using the calibration (CAL) knob.

8.7.5. Place the AS40 in **STANDBY** mode and align the autosampler arm. Check the depth of the sample delivery inside the tube and inside the samples. Exit **STANDBY** mode.

8.7.6. Remove and check the furnace lenses. Reinsert the lenses and check the absorbance. If the absorbance reads above 0.100, clean the lenses.

8.7.7. Put samples and standards into the autosampler tray and cover with the dust cover to prevent contamination.

8.7.8. Put the matrix modifier in the holder position, if required.

8.7.9. Check the blank and standards manually.

8.7.10. Calculate the characteristic concentration (cc). If it is within ±20% of chart value (0993-8199 Rev. D 11/89) start the run.

8.7.11. Enter **collect data** mode on PE Data System 10 computer and follow instructions.

8.7.12. After run is complete, press to **DISK** key on PE Data System 10 **twice**.

8.7.13. Select **report** mode on the computer, follow instructions, and print out the final report.

8.7.14. When finished, shut off the chiller, argon gas supply, lamps, EDL power supply, and computer.

8.7.15. Place the autosampler, HGA Programmer, and PE5000 in standby mode.

9. Emergency Shutdown Procedure

9.1. In case of power failure, turn **POWER SWITCH** on PE5000 AA to **OFF**.

9.2. Turn **off** the **gas valves**.

9.3. Follow building power failure procedures.

10. Calculations

10.1. Characteristic concentration (cc).

$$cc = \frac{C \times V \times 0.0044}{A_s},$$

where cc = characteristic concentration for ETVAA,
C = concentration of standard,
V = sample aliquot (μL),
A_s = absorbance of standard, and
0.0044 = 1% absorbance.

11. Source Material

11.1. *Analytical Methods for Atomic Absorption Spectrophotometry*, (Perkin-Elmer, Norwalk, Conn., 1976).

11.2. *Instructions: Zeeman/5000 System*, (Perkin-Elmer, Norwalk, Conn., 1982).

11.3. Methods for Chemical Analysis of Water and Wastes, EPA-600/4-79-020 U.S. Environmental Protection Agency, rev. March 1983).

11.4. Perkin-Elmer chart 0993-8199 Rev. D (11/89).

11.5. "Test Methods for Evaluation of Solid Waste: Laboratory Manual of Physical and Chemical Methods," EPA report no. SW-846 (November 1986).

CALCIUM IN WATER AND SOIL EXTRACTS — FLAME AA

Analyte: Calcium	**Method No.:** EI125
Matrix: Water, waste water, and soil extracts	**Detection Limit:** 25 mg/L
Procedure: Flame atomic absorption	**Accuracy and Precision:** not determined
Effective Date: 09/23/91	**Authors:** Michael G. Bell Barbara J. Hemberger

SAFETY NOTE: Before beginning this procedure, read all of the Material Safety Data Sheets for the chemicals listed in Sec. 6. Read Sec. 4.3 of the EM-9 Safety Manual for information on personal protective clothing and equipment. Read Sec. 11 of this procedure and Source Material 12.5 for proper waste disposal practices.

1. Principle of Method

1.1. This procedure is based on Environmental Protection Agency (EPA) method 215.1 and SW-846 method 7140.

1.2. Calcium in solution may be readily determined by atomic absorption spectroscopy (AAS). The method is simple and rapid and is applicable to Ca in drinking, surface, and saline waters and in domestic and industrial wastes.

1.3. Drinking water free of particulate matter may be analyzed directly. Ground water, other aqueous samples, TCLP extracts, industrial wastes, soils, sludges, sediments, and other solid wastes require digestion before analysis.

2. Accuracy and Precision

2.1. The accuracy and precision of the method for in-house quality control samples has not yet been determined.

3. Collection and Storage of Samples

3.1. Preserve samples with nitric acid (HNO_3) at a pH <2.0. Complete analysis within six months.

4. Interferences

4.1. Contamination is of prime concern during sample preparation. The work area, including the bench top, should be periodically cleaned to eliminate environmental contamination.

4.2. Chemical interferences can be controlled by the addition of KCl, a matrix modifier, to all samples and standards at high concentration levels (0.1%).

4.3. Silica from the glassware will grow into the sample solution during and following sample processing. Use sterile disposable 50-mL polypropylene centrifuge tubes in the sample digestion steps to control this problem.

5. Apparatus

5.1. Centrifuge tubes: 50-mL, sterile polypropylene.

5.2. Rainin pipettes with disposable tips.

5.3. Wash bottles: 125-mL, polypropylene, screw tops.

5.4. Hot plate: with aluminum heating block drilled to hold centrifuge tubes.

5.5. Perkin-Elmer 5000 atomic absorption spectrometer or equivalent.

5.6. Gases for the above instrument: air, acetylene, nitrous oxide, argon.

6. Reagents

6.1. Nitric acid (low-temperature redistilled acid, LTRD).

6.2. Hydrochloric acid (low-temperature redistilled acid, LTRD).

6.3. Double-deionized water.

6.4. Potassium chloride. Matrix modifier for all samples and standards.

6.5. ASTM Type I water (>10 MΩ/cm resistivity, <0.1 μmho/cm conductivity).

7. Sample Preparation Procedure

7.1. To determine total recoverable elements in water or waste water, take a 50-mL aliquot from an acid-preserved sample containing not more than 0.25% (wt/vol) total solids. Place the aliquot in a sterile disposable 50-mL polypropylene centrifuge tube.

7.1.1. Add 500 μL of LTRD HNO_3 and 250 μL of Ultrex or LTRD HCl to each sample.

7.1.2. Heat on a hot plate without boiling (approximately 85°C) until the final volume is reduced to 5-10 mL.

7.1.3. Loosely cover the tube with the cap and reflux for 30 min.

7.1.4. Allow the sample to cool and dilute to 50 mL with ASTM Type I water.

7.1.5. Run one digested blank and one digested spike with each digested batch.

7.1.6. Run a duplicate and a spike for 10-20% of the samples.

7.1.7. For TCLP samples, run a spike for every sample and run 20% duplicates.

8. Instrument Procedure

8.1. Power instrument and check gases.

8.1.1. Turn the **POWER** switch on the Perkin-Elmer (PE) 5000 atomic absorption (AA) spectrometer to **ON**.

8.1.2. Turn the **POWER** switch on the PE 5000 automatic burner control to **ON**.

8.1.3. Turn the **AIR SUPPLY** valve **ON**.

8.1.4. Check the pressure in the acetylene tank; if it is <100 psi, change the tank. Turn the **ACETYLENE SUPPLY** valve **ON**.

8.1.5. Turn the **NITROUS OXIDE SUPPLY** valve **ON**, if necessary.

8.1.6. Turn the AA switch from **STANDBY** mode to **RUN**.

8.1.7. Make sure the exhaust hood is functioning.

8.1.8. Make sure the fluids in the drain vessel and drain loop are at their proper levels.

8.2. Instrument setup.

8.2.1. Insert the calcium lamp in the turret and plug it in.

8.2.2. Enter the **turret lamp number** on the keyboard.

8.2.3. Enter the recommended **lamp milliamps** (mA).

8.2.4. Enter the **lamp slit width** using the **HIGH SLIT** key for flame AA.

8.2.5. Enter the **lamp wavelength** using the **LAMBDA PEAK** key.

8.2.6. For **signal keys**, enter the **CONTINUOUS** key for setup.

8.2.7. Press the **RECORD ABSORBANCE** key.

8.2.8. Set the **MODE** key to **ABSORBANCE**.

8.2.9. If the wavelength is >300 nm, use the **AA-MODE** key.

8.2.10. If the wavelength is <300 nm, use the **AA-BG MODE** key.

8.2.11. Press the **SETUP** key and adjust the lamp for maximum absorbance.

8.2.11.1. If the absorbance is >80, press the **GAIN** key and continue the lamp adjustment.

8.2.11.2. When the maximum absorbance is reached, turn the **SETUP** key to **OFF**.

8.2.12. Set the **TIME** key to 0.5 s.

8.2.13. Press the **AZ** (autozero) key. Absorbance should read zero.

8.2.14. Install the 10-cm burner head for air-acetylene analysis and the 5-cm head for nitrous oxide-acetylene.

8.2.15. Adjust the burner head height.

8.2.16. Set oxidant and acetylene flow from Table 8.2 in PE *Analytical Methods for AAS*. (source material 12.1).

8.2.17. Shut the burner shield door and light the flame using the flame **ON/OFF** key on the burner assembly.

8.2.18. Aspirate double-deionized water while the flame is lit.

8.2.19. Aspirate the standard and adjust the instrument for maximum absorbance.

8.3. Running samples.

8.3.1. Enter S1, S2, and S3 as directed for standards in *Analytical Methods for AAS*.

8.3.2. Reset **TIME** key to 3 to 6 s.

8.3.3. Press the signal **HOLD** key.

8.3.4. Select **AVERAGE** key if desired.

8.3.5. Aspirate the known standard and press the **READ** key.

8.3.6. Calculate the characteristic concentration (cc). The result should be within ±20% of the value in *Analytical Methods for AAS*.

8.3.7. Aspirate the calibration-curve standards and read the absorbance.

8.3.8. Switch the **MODE** key to **CONC** (concentration).

8.3.9. Aspirate the standards to set concentration keys as needed.

8.3.10. Read samples and QCs (blind and known).

8.3.11. Recalibrate the instrument with standards every 8 to 12 readings.

8.3.12. When finished, switch the flame **ON/OFF** key to **OFF**. Press the **CHECK FLOW** key on the auto burner control twice to relieve line pressure.

8.3.13. Turn the **POWER** switch on the automatic burner control to **OFF**.

8.3.14. Switch the PE 5000 to **STANDBY** mode.

9. Emergency Shutdown Procedure

9.1. In case of power failure, turn the **POWER** switch on the PE 5000 to **OFF**.

9.2. Turn the gas valves **OFF**.

9.3. Follow procedures for building power failure.

10. Calculations

10.1. Characteristic concentration (cc).

$$cc = \frac{C \times 0.0044}{A_s},$$

where cc = characteristic concentration of flame AA,
C = concentration of standard,
0.0044 = 1% absorbance, and
A_s = absorbance of standard.

11. Proper Waste Disposal Practices

11.1. Solid Waste

11.1.1. Solid waste contaminated with hazardous chemicals above the level of concern is not generated during the routine preparation of QC samples for analysis for inorganic contaminants.

11.1.2. If a solid waste is generated that may be contaminated at a level of concern, the appropriate paperwork is completed on a case-by-case basis.

11.1.2.1. A Waste Profile Request Form (WPRF) describing the solid waste is completed and sent to the Waste Management Group for review.

11.1.2.2. If the Waste Management Group determines that the solid waste is contaminated below the level of concern, the waste is disposed of as ordinary laboratory trash.

11.1.2.3. If the Waste Management Group determines that the solid waste is contaminated above the level of concern, pickup of the contaminated waste is requested as described in Sec. 9.3.

11.2. Liquid Waste

11.2.1. Liquid waste containing hazardous contaminants, such as solutions of trace metals, is accumulated in a coated glass jar in a secondary containment tray and is kept segregated from liquid waste contaminated with organic or radioactive substances or cyanide.

11.2.2. The bottle is labeled with a hazardous waste label and a label indicating its use for trace-metal waste.

11.2.3. The bottle is opened only for the period of time necessary to add waste to it.

11.2.4. When the bottle is full, it is capped and kept in the secondary containment tray pending pickup by the Waste Management Group.

11.2.5. A new bottle is labeled for further use.

11.3. Waste Pickup

11.3.1. Pickup by the Waste Management Group of solid waste or a full bottle of liquid waste containing trace metals is requested using the current Chemical Waste Disposal Request Form (CWDR). The current Waste

Profile Request Form (WPRF) that describes the waste is referenced on the CWDR.

11.3.2. The Waste Management Group picks up the waste for disposal in accord with Laboratory policy.

12. Source Materials

12.1. Perkin-Elmer Corp., *Analytical Methods for Atomic Absorption Spectroscopy* (Norwalk, CT, 1976).

12.2. Perkin-Elmer Corp., *Instructions: Zeeman/5000 System* (Norwalk, CT, 1982).

12.3. U.S. Environmental Protection Agency, "Methods for Chemical Analysis of Water and Wastes," EPA-600/4-79-020 (rev. March 1983).

12.4. U.S. Environmental Protection Agency, "Test Methods for Evaluation of Solid Waste: Laboratory Manual of Physical and Chemical Methods," SW-846 (Nov. 1986).

12.5. "Chemical, Hazardous, and Mixed Waste," Administrative Requirement 10-3, Chapter 1 in Los Alamos National Laboratory *Environment, Safety, and Health Manual* (most recent edition).

CHROMIUM IN OIL, WATER, AND SOIL EXTRACTS — FLAME AA

Analyte: Chromium	**Method No.:** EI130
Matrix: Oil, water, waste water, and soil extracts	**Detection Limit:** 1.0 mg/L
Procedure: Flame atomic absorption	**Accuracy and Precision:** 100% ± 4.0% RSD
Effective Date: 09/23/91	**Authors:** Michael G. Bell Barbara J. Hemberger

SAFETY NOTE: Before beginning this procedure, read all of the Material Safety Data Sheets for the chemicals listed in Sec. 6. Read Sec. 4.3 of the EM-9 Safety Manual for information on personal protective clothing and equipment. Read Sec. 11 of this procedure and Source Material 12.5 for proper waste disposal practices.

1. Principle of Method

1.1. This procedure is based on Environmental Protection Agency (EPA) method 218.1 and SW-846 method 7190.

1.2. Chromium in solution may be readily determined by atomic absorption spectroscopy (AAS). The method is simple and rapid and is applicable to Cr in drinking, surface, and saline waters and in domestic and industrial wastes.

1.3. Drinking water free of particulate matter may be analyzed directly. Ground water, other aqueous samples, TCLP extracts, industrial wastes, soils, sludges, sediments, and other solid wastes require digestion before analysis. In oil, methyl isobutyl ketone is used as the solvent for samples and standards.

2. Accuracy and Precision

2.1. The determination of chromium in 27 in-house quality control samples (18.6 μg/L) over a 9-month period had a mean of 17.8 μg/L and a relative standard deviation (RSD) of 4.0%.

3. Collection and Storage of Samples

3.1. Preserve samples with nitric acid (HNO_3) at a pH <2.0. Complete analysis within six months.

4. Interferences

4.1. Contamination is of prime concern during sample preparation. The work area, including the bench top, should be periodically cleaned to eliminate environmental contamination.

4.2. Chemical interferences are matrix dependent and can be corrected by the addition of matrix modifiers. Refer to the Perkin-Elmer (PE) Analytical Methods for AAS for appropriate modifier.

4.3. Silica from the glassware will grow into the sample solution during and following sample processing. Use sterile disposable 50-mL polypropylene centrifuge tubes in the sample digestion steps to control this problem.

5. Apparatus

5.1. Centrifuge tubes: 50-mL, sterile polypropylene.

5.2. Rainin pipettes with disposable tips.

5.3. Wash bottles: 125-mL, polypropylene, screw tops.

5.4. Hot plate: with aluminum heating block drilled to hold centrifuge tubes.

5.5. Perkin-Elmer 5000 atomic absorption spectrometer or equivalent.

5.6. Gases for the above instrument: air, acetylene, nitrous oxide, argon.

6. Reagents

6.1. Nitric acid (low-temperature redistilled acid, LTRD).

6.2. Hydrochloric acid (low-temperature redistilled acid, LTRD).

6.3. Double deionized water.

6.4. Methyl isobutyl ketone (MIBK).

6.5. ASTM Type I water (>10 MΩ/cm resistivity, <0.1 μmho/cm conductivity).

7. Sample Preparation Procedure

7.1. To determine total recoverable elements in water or waste water, take a 50-mL aliquot from an acid-preserved sample containing not more than 0.25% (wt/vol) total solids. Place the aliquot in a sterile disposable 50-mL polypropylene centrifuge tube.

7.1.1. Add 500 μL of LTRD HNO_3 and 250 μL of Ultrex or LTRD HCl to each sample.

7.1.2. Heat on a hot plate without boiling (approximately 85°C) until the final volume is reduced to 5-10 mL.

7.1.3. Loosely cover the tube with the cap and reflux for 30 min.

7.1.4. Allow the sample to cool and dilute to 50 mL with ASTM Type I water.

7.1.5. Run one digested blank and one digested spike with each digested batch.

7.1.6. Run a duplicate and a spike for 10-20% of the samples.

7.1.7. For TCLP samples, run a spike for every sample and run 20% duplicates.

8. Instrument Procedure

8.1. Power instrument and check gases.

8.1.1. Turn the **POWER** switch on the Perkin-Elmer (PE) 5000 atomic absorption (AA) spectrometer to **ON**.

8.1.2. Turn the **POWER** switch on the PE 5000 automatic burner control to **ON**.

8.1.3. Turn the **AIR SUPPLY** valve **ON**.

8.1.4. Check the pressure in the acetylene tank; if it is <100 psi, change the tank. Turn the **ACETYLENE SUPPLY** valve **ON**.

8.1.5. Turn the **NITROUS OXIDE SUPPLY** valve **ON**, if necessary.

8.1.6. Turn the AA switch from **STANDBY** mode to **RUN**.

8.1.7. Make sure the exhaust hood is functioning.

8.1.8. Make sure the fluids in the drain vessel and drain loop are at their proper levels.

8.2. Instrument setup.

8.2.1. Insert the chromium lamp in the turret and plug it in.

8.2.2. Enter the **turret lamp number** on the keyboard.

8.2.3. Enter the recommended **lamp milliamps** (mA).

8.2.4. Enter the **lamp slit width** using the **HIGH SLIT** key for flame AA.

8.2.5. Enter the **lamp wavelength** using the **LAMBDA PEAK** key.

8.2.6. For **signal keys**, enter the **CONTINUOUS** key for setup.

8.2.7. Press the **RECORD ABSORBANCE** key.

8.2.8. Set the **MODE** key to **ABSORBANCE**.

8.2.9. If the wavelength is >300 nm, use the **AA-MODE** key.

8.2.10. If the wavelength is <300 nm, use the **AA-BG MODE** key.

8.2.11. Press the **SETUP** key and adjust the lamp for maximum absorbance.

8.2.11.1. If the absorbance is >80, press the **GAIN** key and continue the lamp adjustment.

8.2.11.2. When the maximum absorbance is reached, turn the **SETUP** key to **OFF**.

8.2.12. Set the **TIME** key to 0.5 s.

8.2.13. Press the **AZ** (autozero) key. Absorbance should read zero.

8.2.14. Install the 10-cm burner head for air-acetylene analysis and the 5-cm head for nitrous oxide-acetylene.

8.2.15. Adjust the burner head height.

8.2.16. Set oxidant and acetylene flow from Table 8.2 in PE *Analytical Methods for AAS*. (source material 12.1).

8.2.17. Shut the burner shield door and light the flame using the flame **ON/OFF** key on the burner assembly.

8.2.18. Aspirate double-deionized water while the flame is lit.

8.2.19. Aspirate the standard and adjust the instrument for maximum absorbance.

8.3. Running samples.

8.3.1. Enter S1, S2, and S3 as directed for standards in *Analytical Methods for AAS*.

8.3.2. Reset **TIME** key to 3 to 6 s.

8.3.3. Press the signal **HOLD** key.

8.3.4. Select **AVERAGE** key if desired.

8.3.5. Aspirate the known standard and press the **READ** key.

8.3.6. Calculate the characteristic concentration (cc). The result should be within ±20% of the value in *Analytical Methods for AAS*.

8.3.7. Aspirate the calibration-curve standards and read the absorbance.

8.3.8. Switch the **MODE** key to **CONC** (concentration).

8.3.9. Aspirate the standards to set concentration keys as needed.

8.3.10. Read samples and QCs (blind and known).

8.3.11. Recalibrate the instrument with standards every 8 to 12 readings.

8.3.12. When finished, switch the flame **ON/OFF** key to **OFF**. Press the **CHECK FLOW** key on the auto burner control twice to relieve line pressure.

8.3.13. Turn the **POWER** switch on the automatic burner control to **OFF**.

8.3.14. Switch the PE 5000 to **STANDBY** mode.

9. Emergency Shutdown Procedure

9.1. In case of power failure, turn the **POWER** switch on the PE 5000 to **OFF**.

9.2. Turn the gas valves **OFF**.

9.3. Follow procedures for building power failure.

10. Calculations

10.1. Characteristic concentration (cc).

$$cc = \frac{C \times 0.0044}{A_s},$$

where cc = characteristic concentration for flame AA,
C = concentration of standard,
0.0044 = 1% absorbance, and
A_s = absorbance of standard.

11. Proper Waste Disposal Practices

11.1. Solid Waste

11.1.1. Solid waste contaminated with hazardous chemicals above the level of concern is not generated during the routine preparation of QC samples for analysis for inorganic contaminants.

11.1.2. If a solid waste is generated that may be contaminated at a level of concern, the appropriate paperwork is completed on a case-by-case basis.

11.1.2.1. A Waste Profile Request Form (WPRF) describing the solid waste is completed and sent to the Waste Management Group for review.

11.1.2.2. If the Waste Management Group determines that the solid waste is contaminated below the level of concern, the waste is disposed of as ordinary laboratory trash.

11.1.2.3. If the Waste Management Group determines that the solid waste is contaminated above the level of concern, pickup of the contaminated waste is requested as described in Sec. 9.3.

11.2. Liquid Waste

11.2.1. Liquid waste containing hazardous contaminants, such as solutions of trace metals, is accumulated in a coated glass jar in a secondary containment tray and is kept segregated from liquid waste contaminated with organic or radioactive substances or cyanide.

11.2.2. The bottle is labeled with a hazardous waste label and a label indicating its use for trace-metal waste.

11.2.3. The bottle is opened only for the period of time necessary to add waste to it.

11.2.4. When the bottle is full, it is capped and kept in the secondary containment tray pending pickup by the Waste Management Group.

11.2.5. A new bottle is labeled for further use.

11.3. Waste Pickup

11.3.1. Pickup by the Waste Management Group of solid waste or a full bottle of liquid waste containing trace metals is requested using the current Chemical Waste Disposal Request Form (CWDR). The current Waste Profile Request Form (WPRF) that describes the waste is referenced on the CWDR.

11.3.2. The Waste Management Group picks up the waste for disposal in accord with Laboratory policy.

12. Source Materials

12.1. Perkin-Elmer Corp., *Analytical Methods for Atomic Absorption Spectroscopy* (Norwalk, CT, 1976).

12.2. Perkin-Elmer Corp., *Instructions: Zeeman/5000 System* (Norwalk, CT, 1982).

12.3. U.S. Environmental Protection Agency, "Methods for Chemical Analysis of Water and Wastes," EPA-600/4-79-020 (rev. March 1983).

12.4. U.S. Environmental Protection Agency, "Test Methods for Evaluation of Solid Waste: Laboratory Manual of Physical and Chemical Methods," SW-846 (Nov. 1986).

12.5. "Chemical, Hazardous, and Mixed Waste," Administrative Requirement 10-3, Chapter 1 in Los Alamos National Laboratory *Environment, Safety, and Health Manual* (most recent edition).

CHROMIUM IN WATER AND SOIL EXTRACTS — GRAPHITE FURNACE AA

Analyte: Chromium	**Method No.:** EI135
Matrix: Water, waste water, and soil extracts	**Detection Limit:** 1.0 μg/L
Procedure: Graphite furnace atomic absorption	**Accuracy and Precision:** 94% ± 0.9% RSD
Effective Date: 09/25/91	**Authors:** Michael G. Bell Barbara J. Hemberger

SAFETY NOTE: Before beginning this procedure, read all of the Material Safety Data Sheets for the chemicals listed in Sec. 6. Read Sec. 4.3 of the EM-9 Safety Manual for information on personal protective clothing and equipment.

1. Principle of Method

1.1. This procedure is based on Environmental Protection Agency (EPA) method 218.2 and SW846 method 7190.

1.2. Chromium in solution may be readily determined by graphite furnace atomic absorption spectroscopy. The method is applicable to Cr in drinking, surface, and saline waters and in domestic and industrial wastes.

1.3. Drinking water free of particulate matter may be analyzed directly. Ground water, other aqueous samples, TCLP extracts, industrial wastes, soils, sludges, sediments, and other solid wastes require digestion before analysis.

2. Accuracy and Precision

2.1. The determination of chromium in 23 in-house quality control samples (18.6 μg/L) over an 8-month period had a mean of 17.4 and a relative standard deviation (RSD) of 0.9%.

3. Collection and Storage of Samples.

3.1. Preserve samples with nitric acid (HNO_3) at a pH <2.0. Complete analysis within 6 months.

4. Interferences

4.1. Contamination is of prime concern during sample preparation. Periodically clean the work area, including the bench top, to eliminate environmental contamination. Use acid-washed sample cups in the autosampler.

4.2. Chemical interferences can be controlled by the addition of a matrix modifier to all samples and standards. Refer to Perkin-Elmer chart 0993-8199 Rev. D (11/89), or to the PE Methods of Analysis for AAS for the appropriate matrix modifier.

4.3. Silica from the glassware will grow into the sample solution during and following sample processing. To control this problem, use disposable sterile 50-mL polypropylene centrifuge tubes in the sample digestion steps.

5. Apparatus

5.1. Centrifuge tubes: 50-mL, sterile prolypropylene.

5.2. Rainin pipettes with disposable tips.

5.3. Wash bottles: 125-mL, polypropylene, screw tops.

5.4. Hot plate: with aluminum heating block drilled to hold centrifuge tubes.

5.5. Perkin-Elmer 5000 atomic absorption instrument: equipped with a Zeeman graphite furnace or equivalent.

5.6. Required gas for the above instrument is ultrapure argon.

6. Reagents

6.1. Nitric acid (low-temperature redistilled acid, LTRD).

6.2. Hydrochloric acid (low-temperature redistilled acid, LTRD).

6.3. Double-deionized water.

6.4. ASTM Type I water (>10 MΩ/cm resistivity, <0.1 μmho/cm conductivity).

6.5. Appropriate matrix modifier for all samples, standards, and QC's.

7. Sample Preparation Procedure

7.1. To determine total recoverable elements in water, waste water, and soil extracts, take a 50-mL aliquot from an acid-preserved sample containing not more than

0.25% (wt/vol) total solids. Place the aliquot in a sterile 50-mL disposable polypropylene centrifuge tube.

7.1.1. Add 500 μL of LTRD HNO_3 and 250 μL of Ultrex or LTRD HCl to each sample.

7.1.2. Heat on a hot plate without boiling (approximately 85°C) until the volume is reduced to 5-10 mL.

7.1.3. Loosely cover the tube with the cap and reflux for 30 min.

7.1.4. Allow the sample to cool, and dilute to 50 mL with ASTM Type I water.

7.1.5. Run one digested blank and one digested spike for each digested batch.

7.1.6. Run a duplicate and a spike for 10-20% of the samples.

7.1.7. For TCLP samples, run a spike for every sample and 20% duplicates.

7.1.8. The analysis should be performed before the EPA regulatory holding times expire.

7.1.9. Add sample and standards to acid-cleaned sample cups.

8. Instrument Procedure

8.1. Instrument power and gases check.

8.1.1. Turn the **POWER SWITCH** to the PE5000 Atomic Absorption (AA) to **ON**.

8.1.2. Turn **ON** the argon supply valve after checking the pressure at the tank. Pressure must be over 100 psi or the tank must be changed.

8.1.3. Turn the AA switch from **STANDBY** mode to **RUN**.

8.1.4. Make sure the exhaust hood over the graphite furnace is functioning.

8.2. Instrument setup.

8.2.1. Insert the chromium lamp into the turret facing ETVAA and plug it in.

8.2.2. Enter **turret lamp number** into keyboard.

8.2.3. Enter recommended **lamp milliamps** (mA) or **watts** depending on lamp type (EDL/HCL).

8.2.3.1. Warm up the EDL and/or HCL lamp for at least 20 min.

8.2.4. Enter **lamp slit width** using **LOW SLIT** key for ETVAA.

8.2.5. Enter **lamp wavelength** using **LAMBDA PEAK** key.

8.2.6. Turn AA switch inside lamp housing to **ICP/ZAA** position.

8.3. Keyboard setup.

8.3.1. Set **SIGNAL** key to **PK AREA** (peak area).

8.3.2. Turn **REC ABS** (record absorbance) signal key **ON**.

8.3.3. Enter **AVG** (average) number (if used).

8.3.4. Enter **CONC MODE** (concentration).

8.4. Furnace setup.

8.4.1. Press **ZAA** key.

8.4.2. Turn **ACCESSORY** knob to **ON** position.

8.4.3. Turn chiller **ON** and check that the water level is above the coils.

8.4.4. Check that the water bottle for distilled water rinse on the autosampler is full.

8.4.5. Turn **ON** the HGA-500 programmer.

8.4.5.1. Enter the temperature program for the element from the ETVAA procedure manual and store the procedure number.

8.5. Computer setup.

8.5.1. Turn PE AA Data System 10 computer **master switch** to **ON**.

8.5.2. Set up ID/WT file.

8.5.3. Turn **print button** on PE5000 keyboard **ON** and store the program.

8.6. Set up autosampler.

8.6.1. Recalibrate the standard curve every 8 to 12 samples.

8.6.2. Enter the number of standards (# stds).

8.6.3. Enter the last sample number (last samp).

8.6.4. Enter the sample volume (samp vol).

8.6.5. Enter the alternate volume (alt vol) for the matrix modifier if used.

8.6.6. Enter the instrument program number (inst prog).

8.6.7. Enter the HGA program number (HGA prog).

8.7. Graphite furnace setup.

8.7.1. Open the furnace and clean or replace the graphite tube. Use the tube with or without the platform depending on the element.

8.7.2. If inserting a new tube, condition it with the manual temperature key.

8.7.3. Using the alignment tool, reinsert the graphite tube and close the furnace.

8.7.4. Using the manual temperature key, set the pyrometer to the atomization temperature of the element and balance the lights (red/green) using the calibration (CAL) knob.

8.7.5. Place the AS40 in **STANDBY** mode and align the autosampler arm. Check the depth of sample delivery inside tube and inside samples. Exit **STANDBY** mode.

8.7.6. Remove and check the furnace lenses. Reinsert the lenses and check the absorbance. If the absorbance reads above 0.1, clean the lenses.

8.7.7. Put samples and standards into the autosampler tray and cover with the dust cover to prevent contamination.

8.7.8. Put the matrix modifier in the holder position, if required.

8.7.9. Check the blank and standards manually.

8.7.10. Calculate the characteristic concentration (cc). If it is within ±20% of chart value start the run.

8.7.11. Enter **collect data** mode on PE Data System 10 computer and follow instructions.

8.7.12. After run is complete, press to **DISK** on PE Data System 10 **twice**.

8.7.13. Select **report** mode on the computer, follow instructions, and print out the final report.

8.7.14. When finished, shut off the chiller, argon gas supply, lamps, EDL power supply, and computer.

8.7.15. Place the autosampler, HGA Programmer, and PE5000 in standby mode.

9. Emergency Shutdown Procedure

9.1. In case of power failure, turn **POWER SWITCH** on PE5000 AA to **OFF**.

9.2. Turn **off** the **gas valves**.

9.3. Follow building power failure procedures.

10. Calculations

10.1. Characteristic concentration (cc).

$$cc = \frac{C \times V \times 0.0044}{A_s},$$

where cc = characteristic concentration for ETVAA,
C = concentration of standard (μg/L),
V = sample aliquot (μL),
A_s = absorbance of standard, and
0.0044 = 1% absorbance.

11. Source Material

11.1. *Analytical Methods for Atomic Absorption Spectrophotometry*, (Perkin-Elmer, Norwalk, Conn., 1976).

11.2. *Instructions: Zeeman/5000 System*, (Perkin-Elmer, Norwalk, Conn., 1982).

11.3. Methods for Chemical Analysis of Water and Wastes, EPA-600/4-79-020 U.S. Envrionmental Protection Agency, (rev. March 1983).

11.4. Perkin-Elmer chart 0993-8199 Rev. D (11/89).

11.5. "Test Methods for Evaluation of Solid Waste Laboratory Manual of Physical and Chemical Methods," EPA report no. SW-846 (November 1986).

COPPER IN WATER AND SOIL EXTRACTS — FLAME AA

Analyte: Copper	**Method No.:** EI140
Matrix: Water, waste water, and soil extracts	**Detection Limit:** 10 μg/L
Procedure: Flame atomic absorption	**Accuracy and Precision:** 100% ± 2.1% RSD
Effective Date: 09/23/91	**Authors:** Michael G. Bell Barbara J. Hemberger

SAFETY NOTE: Before beginning this procedure, read all of the Material Safety Data Sheets for the chemicals listed in Sec. 6. Read Sec. 4.3 of the EM-9 Safety Manual for information on personal protective clothing and equipment. Read Sec. 11 of this procedure and Source Material 12.5 for proper waste disposal practices.

1. Principle of Method

1.1. This procedure is based on Environmental Protection Agency (EPA) method 220.1 and SW-846 method 7210.

1.2. Copper in solution may be readily determined by atomic absorption spectroscopy (AAS). The method is simple and rapid and is applicable to Cu in drinking, surface, and saline waters and in domestic and industrial wastes.

1.3. Drinking water free of particulate matter may be analyzed directly. Ground water, other aqueous samples, TCLP extracts, industrial wastes, soils, sludges, sediments, and other solid wastes require digestion prior to analysis.

2. Accuracy and Precision

2.1. The determination of copper in 20 in-house quality control samples (21.9 μg/L) over a 9-month period had a mean of 21.2 μg/L and a relative standard deviation (RSD) of 2.1%.

3. Collection and Storage of Samples

3.1. Preserve samples with nitric acid (HNO_3) at a pH <2.0. Complete analysis within six months.

4. Interferences

4.1. Contamination is of prime concern during sample preparation. The work area, including the bench top, should be periodically cleaned to eliminate environmental contamination.

4.2. Chemical interferences are matrix dependent.

4.3. Silica from the glassware will grow into the sample solution during and following sample processing. Use sterile disposable 50-mL polypropylene centrifuge tubes in the sample digestion steps to control this problem.

5. Apparatus

5.1. Centrifuge tubes: 50-mL, sterile polypropylene.

5.2. Rainin pipettes with disposable tips.

5.3. Wash bottles: 125-mL, polypropylene, screw tops.

5.4. Hot plate: with aluminum heating block drilled to hold centrifuge tubes.

5.5. Perkin-Elmer 5000 atomic absorption spectrometer or equivalent.

5.6. Gases for the above instrument: air, acetylene, nitrous oxide, argon.

6. Reagents

6.1. Nitric acid (low-temperature redistilled acid, LTRD).

6.2. Hydrochloric acid (low-temperature redistilled acid, LTRD).

6.3. Double-deionized water.

6.4. ASTM Type I water (>10 MΩ/cm resistivity, <0.1 μmho/cm conductivity).

7. Sample Preparation Procedure

7.1. To determine total recoverable elements in water or waste water, take a 50-mL aliquot from an acid-preserved sample containing not more than 0.25% (wt/vol) total solids. Place the aliquot in a sterile disposable 50-mL polypropylene centrifuge tube.

7.1.1. Add 500 μL of LTRD HNO_3 and 250 μL of Ultrex or LTRD HCl to each sample.

7.1.2. Heat on a hot plate without boiling (approximately 85°C) until the final volume is reduced to 5-10 mL.

7.1.3. Loosely cover the tube with the cap and reflux for 30 min.

7.1.4. Allow the sample to cool and dilute to 50 mL with ASTM Type I water.

7.1.5. Run one digested blank and one digested spike with each digested batch.

7.1.6. Run a duplicate and a spike for 10-20% of the samples.

7.1.7. For TCLP samples, run a spike for every sample and run 20% duplicates.

8. Instrument Procedure

8.1. Power instrument and check gases.

8.1.1. Turn the **POWER** switch on the Perkin-Elmer (PE) 5000 atomic absorption (AA) spectrometer to **ON**.

8.1.2. Turn the **POWER** switch on the PE 5000 automatic burner control to **ON**.

8.1.3. Turn the **AIR SUPPLY** valve **ON**.

8.1.4. Check the pressure in the acetylene tank; if it is <100 psi, change the tank. Turn the **ACETYLENE SUPPLY** valve **ON**.

8.1.5. Turn the **NITROUS OXIDE SUPPLY** valve **ON**, if necessary.

8.1.6. Turn the AA switch from **STANDBY** mode to **RUN**.

8.1.7. Make sure the exhaust hood is functioning.

8.1.8. Make sure the fluids in the drain vessel and drain loop are at their proper levels.

8.2. Instrument setup.

8.2.1. Insert the copper lamp in the turret and plug it in.

8.2.2. Enter the **turret lamp number** on the keyboard.

8.2.3. Enter the recommended **lamp milliamps** (mA).

8.2.4. Enter the **lamp slit width** using the **HIGH SLIT** key for flame AA.

8.2.5. Enter the **lamp wavelength** using the **LAMBDA PEAK** key.

8.2.6. For **signal keys**, enter the **CONTINUOUS** key for setup.

8.2.7. Press the **RECORD ABSORBANCE** key.

8.2.8. Set the **MODE** key to **ABSORBANCE.**

8.2.9. If the wavelength is >300 nm, use the **AA-MODE** key.

8.2.10. If the wavelength is <300 nm, use the **AA-BG MODE** key.

8.2.11. Press the **SETUP** key and adjust the lamp for maximum absorbance.

8.2.11.1. If the absorbance is >80, press the **GAIN** key and continue the lamp adjustment.

8.2.11.2. When the maximum absorbance is reached, turn the **SETUP** key to **OFF.**

8.2.12. Set the **TIME** key to 0.5 s.

8.2.13. Press the **AZ** (autozero) key. Absorbance should read zero.

8.2.14. Install the 10-cm burner head for air-acetylene analysis and the 5-cm head for nitrous oxide-acetylene.

8.2.15. Adjust the burner head height.

8.2.16. Set oxidant and acetylene flow from Table 8.2 in PE *Analytical Methods for AAS.* (source material 12.1).

8.2.17. Shut the burner shield door and light the flame using the flame **ON/OFF** key on the burner assembly.

8.2.18. Aspirate double-deionized water while the flame is lit.

8.2.19. Aspirate the standard and adjust the instrument for maximum absorbance.

8.3. Running samples.

8.3.1. Enter S1, S2, and S3 as directed for standards in *Analytical Methods for AAS.*

8.3.2. Reset **TIME** key to 3 to 6 s.

8.3.3. Press the signal **HOLD** key.

8.3.4. Select **AVERAGE** key if desired.

8.3.5. Aspirate the known standard and press the **READ** key.

8.3.6. Calculate the characteristic concentration (cc). The result should be within ±20% of the value in *Analytical Methods for AAS*.

8.3.7. Aspirate the calibration-curve standards and read the absorbance.

8.3.8. Switch the **MODE** key to **CONC** (concentration).

8.3.9. Aspirate the standards to set concentration keys as needed.

8.3.10. Read samples and QCs (blind and known).

8.3.11. Recalibrate the instrument with standards every 8 to 12 readings.

8.3.12. When finished, switch the flame **ON/OFF** key to **OFF**. Press the **CHECK FLOW** key on the auto burner control twice to relieve line pressure.

8.3.13. Turn the **POWER** switch on the automatic burner control to **OFF**.

8.3.14. Switch the PE 5000 to **STANDBY** mode.

9. Emergency Shutdown Procedure

9.1. In case of power failure, turn the **POWER** switch on the PE 5000 to **OFF**.

9.2. Turn the gas valves **OFF**.

9.3. Follow procedures for building power failure.

10. Calculations

10.1. Characteristic concentration (cc).

$$cc = \frac{C \times 0.0044}{A_s},$$

where cc = characteristic concentration for flame AA,
C = concentration of standard,
0.0044 = 1% absorbance, and
A_s = absorbance of standard.

11. Proper Waste Disposal Practices

11.1. Solid Waste

11.1.1. Solid waste contaminated with hazardous chemicals above the level of concern is not generated during the routine preparation of QC samples for analysis for inorganic contaminants.

11.1.2. If a solid waste is generated that may be contaminated at a level of concern, the appropriate paperwork is completed on a case-by-case basis.

11.1.2.1. A Waste Profile Request Form (WPRF) describing the solid waste is completed and sent to the Waste Management Group for review.

11.1.2.2. If the Waste Management Group determines that the solid waste is contaminated below the level of concern, the waste is disposed of as ordinary laboratory trash.

11.1.2.3. If the Waste Management Group determines that the solid waste is contaminated above the level of concern, pickup of the contaminated waste is requested as described in Sec. 9.3.

11.2. Liquid Waste

11.2.1. Liquid waste containing hazardous contaminants, such as solutions of trace metals, is accumulated in a coated glass jar in a secondary containment tray and is kept segregated from liquid waste contaminated with organic or radioactive substances or cyanide.

11.2.2. The bottle is labeled with a hazardous waste label and a label indicating its use for trace-metal waste.

11.2.3. The bottle is opened only for the period of time necessary to add waste to it.

11.2.4. When the bottle is full, it is capped and kept in the secondary containment tray pending pickup by the Waste Management Group.

11.2.5. A new bottle is labeled for further use.

11.3. Waste Pickup

11.3.1. Pickup by the Waste Management Group of solid waste or a full bottle of liquid waste containing trace metals is requested using the current Chemical Waste Disposal Request Form (CWDR). The current Waste

Profile Request Form (WPRF) that describes the waste is referenced on the CWDR.

11.3.2. The Waste Management Group picks up the waste for disposal in accord with Laboratory policy.

12. Source Materials

12.1. Perkin-Elmer Corp., *Analytical Methods for Atomic Absorption Spectroscopy* (Norwalk, CT, 1976).

12.2. Perkin-Elmer Corp., *Instructions: Zeeman/5000 System* (Norwalk, CT, 1982).

12.3. U.S. Environmental Protection Agency, "Methods for Chemical Analysis of Water and Wastes," EPA-600/4-79-020 (rev. March 1983).

12.4. U.S. Environmental Protection Agency, "Test Methods for Evaluation of Solid Waste: Laboratory Manual of Physical and Chemical Methods," SW-846 (Nov. 1986).

12.5. "Chemical, Hazardous, and Mixed Waste," Administrative Requirement 10-3, Chapter 1 in Los Alamos National Laboratory *Environment, Safety, and Health Manual* (most recent edition)

IRON IN WATER AND SOIL EXTRACTS — FLAME AA

Analyte: Iron	**Method No.:** EI145
Matrix: Water, waste water, and soil extracts	**Detection Limits:** 20 μg/L
Procedure: Flame atomic absorption	**Accuracy and Precision:** 100% ± 8.7% RSD
Effective Date: 09/23/91	**Authors:** Michael G. Bell Barbara J. Hemberger

SAFETY NOTE: Before beginning this procedure, read all of the Material Safety Data Sheets for the chemicals listed in Sec. 6. Read Sec. 4.3 of the EM-9 Safety Manual for information on personal protective clothing and equipment. Read Sec. 11 of this procedure and Source Material 12.5 for proper waste disposal practices.

1. Principle of Method

1.1. This procedure is based on Environmental Protection Agency (EPA) method 236.1 and SW-846 method 7380.

1.2. Iron in solution may be readily determined by atomic absorption spectroscopy (AAS). The method is simple and rapid and is applicable to Fe in drinking, surface, and saline waters and in domestic and industrial wastes.

1.3. Drinking water free of particulate matter may be analyzed directly. Ground water, other aqueous samples, TCLP extracts, industrial wastes, soils, sludges, sediments, and other solid wastes require digestion prior to analysis.

2. Accuracy and Precision

2.1. The determination of iron in 24 in-house quality control samples (99 μg/L) over a 9-month period had a mean of 107.3 μg/L and a relative standard deviation (RSD) of 8.7%.

3. Collection and Storage of Samples

3.1. Preserve samples with nitric acid (HNO_3) at a pH <2.0. Complete analysis within six months.

4. Interferences

4.1. Contamination is of prime concern during sample preparation. The work area, including the bench top, should be periodically cleaned to eliminate environmental contamination.

4.2. Chemical interferences are matrix dependent.

4.3. Silica from the glassware will grow into the sample solution during and following sample processing. Use sterile disposable 50-mL polypropylene centrifuge tubes in the sample digestion steps to control this problem.

5. Apparatus

5.1. Centrifuge tubes: 50-mL, sterile polypropylene.

5.2. Rainin pipettes with disposable tips.

5.3. Wash bottles: 125-mL, polypropylene, screw tops.

5.4. Hot plate: with aluminum heating block drilled to hold centrifuge tubes.

5.5. Perkin-Elmer 5000 atomic absorption spectrometer or equivalent.

5.6. Gases for the above instrument: air, acetylene, nitrous oxide, argon.

6. Reagents

6.1. Nitric acid (low-temperature redistilled acid, LTRD).

6.2. Hydrochloric acid (low-temperature redistilled acid, LTRD).

6.3. Double deionized water.

6.4. ASTM Type I water (>10 MΩ/cm resistivity, <0.1 μmho/cm conductivity).

7. Sample Preparation Procedure

7.1. To determine total recoverable elements in water or waste water, take a 50-mL aliquot from an acid-preserved sample containing not more than 0.25% (wt/vol) total solids. Place the aliquot in a sterile disposable 50-mL polypropylene centrifuge tube.

7.1.1. Add 500 μL of LTRD HNO_3 and 250 μL of Ultrex or LTRD HCl to each sample.

7.1.2. Heat on a hot plate without boiling (approximately 85°C) until the final volume is reduced to 5-10 mL.

7.1.3. Loosely cover the tube with the cap and reflux for 30 min.

7.1.4. Allow the sample to cool and dilute to 50 mL with ASTM Type I water.

7.1.5. Run one digested blank and one digested spike with each digested batch.

7.1.6. Run a duplicate and a spike for 10-20% of the samples.

7.1.7. For TCLP samples, run a spike for every sample and run 20% duplicates.

8. Instrument Procedure

8.1. Power instrument and check gases.

8.1.1. Turn the **POWER** switch on the Perkin-Elmer (PE) 5000 atomic absorption (AA) spectrometer to **ON**.

8.1.2. Turn the **POWER** switch on the PE 5000 automatic burner control to **ON**.

8.1.3. Turn the **AIR SUPPLY** valve **ON**.

8.1.4. Check the pressure in the acetylene tank; if it is <100 psi, change the tank. Turn the **ACETYLENE SUPPLY** valve **ON**.

8.1.5. Turn the **NITROUS OXIDE SUPPLY** valve **ON**, if necessary.

8.1.6. Turn the AA switch from **STANDBY** mode to **RUN**.

8.1.7. Make sure the exhaust hood is functioning.

8.1.8. Make sure the fluids in the drain vessel and drain loop are at their proper levels.

8.2. Instrument setup.

8.2.1. Insert the iron lamp in the turret and plug it in.

8.2.2. Enter the **turret lamp number** on the keyboard.

8.2.3. Enter the recommended **lamp milliamps** (mA).

8.2.4. Enter the **lamp slit width** using the **HIGH SLIT** key for flame AA.

8.2.5. Enter the **lamp wavelength** using the **LAMBDA PEAK** key.

8.2.6. For **signal keys**, enter the **CONTINUOUS** key for setup.

8.2.7. Press the **RECORD ABSORBANCE** key.

8.2.8. Set the **MODE** key to **ABSORBANCE.**

8.2.9. If the wavelength is >300 nm, use the **AA-MODE** key.

8.2.10. If the wavelength is <300 nm, use the **AA-BG MODE** key.

8.2.11. Press the **SETUP** key and adjust the lamp for maximum absorbance.

8.2.11.1. If the absorbance is >80, press the **GAIN** key and continue the lamp adjustment.

8.2.11.2. When the maximum absorbance is reached, turn the **SETUP** key to **OFF.**

8.2.12. Set the **TIME** key to 0.5 s.

8.2.13. Press the **AZ** (autozero) key. Absorbance should read zero.

8.2.14. Install the 10-cm burner head for air-acetylene analysis and the 5-cm head for nitrous oxide-acetylene.

8.2.15. Adjust the burner head height.

8.2.16. Set oxidant and acetylene flow from Table 8.2 in PE *Analytical Methods for AAS.* (source material 12.1).

8.2.17. Shut the burner shield door and light the flame using the flame **ON/OFF** key on the burner assembly.

8.2.18. Aspirate double-deionized water while the flame is lit.

8.2.19. Aspirate the standard and adjust the instrument for maximum absorbance.

8.3. Running samples.

8.3.1. Enter S1, S2, and S3 as directed for standards in *Analytical Methods for AAS.*

8.3.2. Reset **TIME** key to 3 to 6 s.

8.3.3. Press the signal **HOLD** key.

8.3.4. Select **AVERAGE** key if desired.

8.3.5. Aspirate the known standard and press the **READ** key.

8.3.6. Calculate the characteristic concentration (cc). The result should be within ±20% of the value in *Analytical Methods for AAS*.

8.3.7. Aspirate the calibration-curve standards and read the absorbance.

8.3.8. Switch the **MODE** key to **CONC** (concentration).

8.3.9. Aspirate the standards to set concentration keys as needed.

8.3.10. Read samples and QCs (blind and known).

8.3.11. Recalibrate the instrument with standards every 8 to 12 readings.

8.3.12. When finished, switch the flame **ON/OFF** key to **OFF**. Press the **CHECK FLOW** key on the auto burner control twice to relieve line pressure.

8.3.13. Turn the **POWER** switch on the automatic burner control to **OFF**.

8.3.14. Switch the PE 5000 to **STANDBY** mode.

9. Emergency Shutdown Procedure

9.1. In case of power failure, turn the **POWER** switch on the PE 5000 to **OFF**.

9.2. Turn the gas valves **OFF**.

9.3. Follow procedures for building power failure.

10. Calculations

10.1. Characteristic concentration (cc).

$$cc = \frac{C \times 0.0044}{A_s},$$

where cc = characteristic concentration for flame AA,
C = concentration of standard,
0.0044 = 1% absorbance, and
A_s = absorbance of standard.

11. Proper Waste Disposal Practices

11.1. Solid Waste

11.1.1. Solid waste contaminated with hazardous chemicals above the level of concern is not generated during the routine preparation of QC samples for analysis for inorganic contaminants.

11.1.2. If a solid waste is generated that may be contaminated at a level of concern, the appropriate paperwork is completed on a case-by-case basis.

11.1.2.1. A Waste Profile Request Form (WPRF) describing the solid waste is completed and sent to the Waste Management Group for review.

11.1.2.2. If the Waste Management Group determines that the solid waste is contaminated below the level of concern, the waste is disposed of as ordinary laboratory trash.

11.1.2.3. If the Waste Management Group determines that the solid waste is contaminated above the level of concern, pickup of the contaminated waste is requested as described in Sec. 9.3.

11.2. Liquid Waste

11.2.1. Liquid waste containing hazardous contaminants, such as solutions of trace metals, is accumulated in a coated glass jar in a secondary containment tray and is kept segregated from liquid waste contaminated with organic or radioactive substances or cyanide.

11.2.2. The bottle is labeled with a hazardous waste label and a label indicating its use for trace-metal waste.

11.2.3. The bottle is opened only for the period of time necessary to add waste to it.

11.2.4. When the bottle is full, it is capped and kept in the secondary containment tray pending pickup by the Waste Management Group.

11.2.5. A new bottle is labeled for further use.

11.3. Waste Pickup

11.3.1. Pickup by the Waste Management Group of solid waste or a full bottle of liquid waste containing trace metals is requested using the current Chemical Waste Disposal Request Form (CWDR). The current Waste

Profile Request Form (WPRF) that describes the waste is referenced on the CWDR.

11.3.2. The Waste Management Group picks up the waste for disposal in accord with Laboratory policy.

12. Source Materials

12.1. Perkin-Elmer Corp., *Analytical Methods for Atomic Absorption Spectroscopy* (Norwalk, CT, 1976).

12.2. Perkin-Elmer Corp., *Instructions: Zeeman/5000 System* (Norwalk, CT, 1982).

12.3. U.S. Environmental Protection Agency, "Methods for Chemical Analysis of Water and Wastes," EPA-600/4-79-020 (rev. March 1983).

12.4. U.S. Environmental Protection Agency, "Test Methods for Evaluation of Solid Waste: Laboratory Manual of Physical and Chemical Methods," SW-846 (Nov. 1986).

12.5. "Chemical, Hazardous, and Mixed Waste," Administrative Requirement 10-3, Chapter I in Los Alamos National Laboratory *Environment, Safety, and Health Manual* (most recent edition).

LEAD IN WATER AND SOIL EXTRACTS — GRAPHITE FURNACE AA

Analyte: Lead	**Method No.:** EI150
Matrix: Water, waste water, and soil extracts	**Detection Limit:** 2.0 μg/L
Procedure: Graphite furnace atomic absorption	**Accuracy and Precision:** 99.6% ± 1.0% RSD
Effective Date: 09/25/91	**Authors:** Michael G. Bell Barbara J. Hemberger

SAFETY NOTE: Before beginning this procedure, read all of the Material Safety Data Sheets for the chemicals listed in Sec. 6. Read Sec. 4.3 of the EM-9 Safety Manual for information on personal protective clothing and equipment.

1. Principle of Method

1.1. This procedure is based on Environmental Protection Agency (EPA) method 239.2 and SW846 method 7421.

1.2. Lead in solution may be readily determined by graphite furnace atomic absorption spectroscopy. The method is applicable to Pb in drinking, surface, and saline waters and in domestic and industrial wastes.

1.3. Drinking water free of particulate matter may be analyzed directly. Ground water, other aqueous samples, TCLP extracts, industrial wastes, soils, sludges, sediments, and other solid wastes require digestion before analysis.

2. Accuracy and Precision

2.1. The determination of lead in 12 in-house quality control samples (72.0 μg/L) over an 8-month period had a mean of 71.7 μg/L and a relative standard deviation (RSD) of 1.0%.

3. Collection and Storage of Samples

3.1. Preserve samples with nitric acid (HNO_3) at a pH <2.0. Complete analysis within 6 months.

4. Interferences

4.1. Contamination is of prime concern during sample preparation. Periodically clean the work area, including the bench top, to eliminate environmental contamination. Use acid-washed sample cups in the autosampler.

4.2. Chemical interferences can be controlled by the addition of a matrix modifier to all samples and standards. Refer to Perkin Elmer chart 0993-8199 Rev. D (11/89), or to the PE Methods of Analysis for AAS for the appropriate matrix modifier.

4.3. Silica from the glassware will grow into the sample solution during and following sample processing. To control this problem, use disposable sterile 50-mL polypropylene centrifuge tubes in the sample digestion steps.

5. Apparatus

5.1. Centrifuge tubes: 50-mL, sterile polypropylene.

5.2. Rainin pipettes with disposable tips.

5.3. Wash bottles: 125-mL, polypropylene, screw tops.

5.4. Hot plate: with aluminum heating block drilled to hold centrifuge tubes.

5.5. Perkin-Elmer 5000 atomic absorption instrument: equipped with a Zeeman graphite furnace or equivalent.

5.6. Required gas for the above instrument is ultrapure argon.

6. Reagents

6.1. Nitric acid (low-temperature redistilled acid, LTRD).

6.2. Hydrochloric acid (low-temperature redistilled acid, LTRD).

6.3. Double-deionized water.

6.4. ASTM Type I water (>10 MΩ/cm resistivity, <0.1 μmho/cm conductivity).

6.5. Appropriate matrix modifier for all samples, standards, and QCs.

6.6. Secondary standards for making the appropriate standard curves.

7. Sample Preparation Procedure

7.1. To determine total recoverable elements in water, waste water, and soil extracts, take a 50-mL aliquot from an acid preserved sample containing not more than 0.25% (wt/vol) total solids. Place the aliquot in a sterile 50-mL disposable polypropylene centrifuge tube.

7.1.1. Add 500 μL of LTRD HNO_3 and 250 μL of Ultrex or LTRD HCl to each sample.

7.1.2. Heat on a hot plate without boiling (approximately 85°C) until the volume is reduced to 5-10 mL.

7.1.3. Loosely cover the tube with the cap and reflux for 30 min.

7.1.4. Allow the sample to cool, and dilute to 50 mL with ASTM Type I water.

7.1.5. Run one digested blank and one digested spike for each digested batch.

7.1.6. Run a duplicate and a spike for 10-20% of the samples.

7.1.7. For TCLP samples, run a spike for every sample and 20% duplicates.

7.1.8. The analysis should be performed before the EPA regulatory holding times expire.

7.1.9. Add sample and standards to acid-cleaned sample cups.

8. Instrument Procedure

8.1. Instrument power and gases check.

8.1.1. Turn the **POWER SWITCH** to the PE5000 Atomic Absorption (AA) to **ON**.

8.1.2. Turn **ON** the argon supply valve after checking the pressure at the tank. Pressure must be over 100 psi or the tank must be changed.

8.1.3. Turn the AA switch from **STANDBY** mode to **RUN**.

8.1.4. Make sure the exhaust hood over the graphite furnace is functioning.

8.2. Instrument setup.

8.2.1. Insert the lead lamp into the turret oriented toward the ETVAA and plug it in.

8.2.2. Enter **turret lamp number** into keyboard.

8.2.3. Enter recommended **lamp milliamps** (mA) or **watts** depending on lamp type (EDL/HCL).

8.2.3.1. Warm up the EDL and/or HCL lamp for at least 20 min.

8.2.4. Enter **lamp slit width** using **LOW SLIT** key for ETVAA.

8.2.5. Enter **lamp wavelength** using **LAMBDA PEAK** key.

8.2.6. Turn AA switch inside lamp housing to **ICP/ZAA** position.

8.3. Keyboard setup.

8.3.1. Set **SIGNAL** key to **PK AREA** (peak area).

8.3.2. Turn **REC ABS** (record absorbance) signal key **ON**.

8.3.3. Enter **AVG** (average) number (if used).

8.3.4. Enter **CONC MODE** (concentration).

8.4. Furnace setup.

8.4.1. Press **ZAA** key.

8.4.2. Turn **ACCESSORY** knob to **ON** position.

8.4.3. Turn chiller **ON** and check that the water level is above the coils.

8.4.4. Check that the water bottle for distilled water rinse on the autosampler is full.

8.4.5. Turn **ON** the HGA-500 programmer.

8.4.5.1. Enter the temperature program for the element from the ETVAA procedure manual and store the procedure number.

8.5. Computer setup.

8.5.1 Turn PE AA Data System 10 computer **master switch** to **ON**.

8.5.2 Set up ID/WT file.

8.5.3 Turn **print button** on PE5000 keyboard **ON** and store the program.

8.6. Set up autosampler.

8.6.1. Recalibrate the standard curve every 8 to 12 samples.

8.6.2. Enter the number of standards (# stds).

8.6.3. Enter the last sample number (last samp).

8.6.4. Enter the sample volume (samp vol).

8.6.5. Enter the alternate volume (alt vol) for the matrix modifier if used.

8.6.6. Enter the instrument program number (inst prog).

8.6.7. Enter the HGA program number (HGA prog).

8.7. Graphite furnace setup.

8.7.1. Open the furnace and clean or replace the graphite tube. Use the tube with or without the platform depending on the element.

8.7.2. If inserting a new tube, condition it with the manual temperature key.

8.7.3. Using the alignment tool, reinsert the graphite tube and close the furnace.

8.7.4. Using the manual temperature key, set the pyrometer to the atomization temperature of the element and balance the lights (red/green) using the calibration (CAL) knob.

8.7.5. Place the AS40 in **STANDBY** mode and align the autosampler arm. Check the depth of the sample delivery inside the tube and inside the samples. Exit **STANDBY** mode.

8.7.6. Remove and check the furnace lenses. Reinsert the lenses and check the absorbance. If the absorbance reads above 0.100, clean the lenses.

8.7.7. Put samples and standards into the autosampler tray and cover with the dust cover to prevent contamination.

8.7.8. Put the matrix modifier in the holder position, if required.

8.7.9. Check the blank and standards manually.

8.7.10. Calculate the characteristic concentration (cc). If it is within ±20% of chart value (0993-8199 Rev. D 11/89) start the run.

8.7.11. Enter **collect data** mode on PE Data System 10 computer and follow instructions.

8.7.12. After run is complete, press **DISK** key on PE Data System 10 **twice.**

8.7.13. Select **report** mode on the computer, follow instructions, and print out the final report.

8.7.14. When finished, shut off the chiller, argon gas supply, lamps, EDL power supply, and computer.

8.7.15. Place the autosampler, HGA Programmer, and PE5000 in standby mode.

9. Emergency Shutdown Procedure

9.1. In case of power failure, turn **POWER SWITCH** on PE5000 AA to **OFF.**

9.2. Turn **off** the **gas valves.**

9.3. Follow building power failure procedures.

10. Calculations

10.1. Characteristic concentration (cc).

$$cc = \frac{C \times V \times 0.0044}{A_s},$$

where cc = characteristic concentration for ETVAA,
C = concentration of standard (μg/L),
V = sample aliquot (μL),
A_s = absorbance of standard, and
0.0044 = 1% absorbance.

11. Source Material

11.1. *Analytical Methods for Atomic Absorption Spectrophotometry*, (Perkin-Elmer, Norwalk, Conn., 1976).

11.2. *Instructions: Zeeman/5000 System*, (Perkin-Elmer, Norwalk, Conn., 1982).

11.3. Methods for Chemical Analysis of Water and Wastes, EPA-600/4-79-020 U.S. Environmental Protection Agency, (rev. March 1983).

11.4. Perkin-Elmer chart 0993-8199 Rev. D (11/89).

11.5. "Test Methods for Evaluation of Solid Waste: Laboratory Manual of Physical and Chemical Methods," EPA report no. SW-846 (November 1986).

MAGNESIUM IN WATER AND SOIL EXTRACTS – FLAME AA

Analyte: Magnesium	**Method No.:** EI160
Matrix: Water, waste water, and soil extracts	**Detection Limit:** 250 μg/L
Procedure: Flame atomic absorption	**Accuracy and Precision:** not determined
Effective Date: 09/23/91	**Authors:** Michael G. Bell Barbara J. Hemberger

SAFETY NOTE: Before beginning this procedure, read all of the Material Safety Data Sheets for the chemicals listed in Sec. 6. Read Sec. 4.3 of the EM-9 Safety Manual for information on personal protective clothing and equipment. Read Sec. 11 of this procedure and Source Material 12.5 for proper waste disposal practices.

1. Principle of Method

1.1. This procedure is based on Environmental Protection Agency (EPA) method 242.1 and SW-846 method 7050.

1.2. Magnesium in solution may be readily determined by atomic absorption spectroscopy. The method is simple and rapid and is applicable to Mg in drinking, surface, and saline waters and in domestic and industrial wastes.

1.3. Drinking water free of particulate matter may be analyzed directly. Ground water, other aqueous samples, TCLP extracts, industrial wastes, soils, sludges, sediments, and other solid wastes require digestion prior to analysis.

2. Accuracy and Precision

2.1. The accuracy and precision of the method for in-house quality control samples has not yet been determined.

3. Collection and Storage of Samples

3.1. Preserve samples with nitric acid (HNO_3) at a pH <2.0. Complete analysis within six months.

4. Interferences

4.1. Contamination is of prime concern during sample preparation. The work area, including the bench top, should be periodically cleaned to eliminate environmental contamination.

4.2. Chemical interferences can be controlled by the addition of KCl, a matrix modifier, to all samples and standards at high concentration levels (0.1%).

4.3. Silica from the glassware will grow into the sample solution during and following sample processing. Use sterile disposable 50-mL polypropylene centrifuge tubes in the sample digestion steps to control this problem.

5. Apparatus

5.1. Centrifuge tubes: 50-mL, sterile polypropylene.

5.2. Rainin pipettes with disposable tips.

5.3. Wash bottles: 125-mL, polypropylene, screw tops.

5.4. Hot plate: with aluminum heating block drilled to hold centrifuge tubes.

5.5. Perkin-Elmer 5000 atomic absorption spectrometer or equivalent.

5.6. Gases for the above instrument: air, acetylene, nitrous oxide, argon.

6. Reagents

6.1. Nitric acid (low-temperature redistilled acid, LTRD).

6.2. Hydrochloric acid (low-temperature redistilled acid, LTRD).

6.3. Double-deionized water.

6.4. Potassium chloride. Matrix modifier for all samples and standards.

6.5. ASTM Type I water (>10 MΩ/cm resistivity, <0.1 μmho/cm conductivity).

7. Sample Preparation Procedure

7.1. To determine total recoverable elements in water or waste water, take a 50-mL aliquot from an acid-preserved sample containing not more than 0.25% (wt/vol) total solids. Place the aliquot in a sterile disposable 50-mL polypropylene centrifuge tube.

7.1.1. Add 500 μL of LTRD HNO_3 and 250 μL of Ultrex or LTRD HCl to each sample.

7.1.2. Heat on a hot plate without boiling (approximately 85°C) until the final volume is reduced to 5-10 mL.

7.1.3. Loosely cover the tube with the cap and reflux for 30 min.

7.1.4. Allow the sample to cool and dilute to 50 mL with ASTM Type I water.

7.1.5. Run one digested blank and one digested spike with each digested batch.

7.1.6. Run a duplicate and a spike for 10-20% of the samples.

7.1.7. For TCLP samples, run a spike for every sample and run 20% duplicates.

8. Instrument Procedure

8.1. Power instrument and check gases.

8.1.1. Turn the **POWER** switch on the Perkin-Elmer (PE) 5000 atomic absorption (AA) spectrometer to **ON**.

8.1.2. Turn the **POWER** switch on the PE 5000 automatic burner control to **ON**.

8.1.3. Turn the **AIR SUPPLY** valve **ON**.

8.1.4. Check the pressure in the acetylene tank; if it is <100 psi, change the tank. Turn the **ACETYLENE SUPPLY** valve **ON**.

8.1.5. Turn the **NITROUS OXIDE SUPPLY** valve **ON**, if necessary.

8.1.6. Turn the AA switch from **STANDBY** mode to **RUN**.

8.1.7. Make sure the exhaust hood is functioning.

8.1.8. Make sure the fluids in the drain vessel and drain loop are at their proper levels.

8.2. Instrument setup.

8.2.1. Insert the magnesium lamp in the turret and plug it in.

8.2.2. Enter the **turret lamp number** on the keyboard.

8.2.3. Enter the recommended **lamp milliamps** (mA).

8.2.4. Enter the **lamp slit width** using the **HIGH SLIT** key for flame AA.

8.2.5. Enter the **lamp wavelength** using the **LAMBDA PEAK** key.

8.2.6. For **signal keys**, enter the **CONTINUOUS** key for setup.

8.2.7. Press the **RECORD ABSORBANCE** key.

8.2.8. Set the **MODE** key to **ABSORBANCE**.

8.2.9. If the wavelength is >300 nm, use the **AA-MODE** key.

8.2.10. If the wavelength is <300 nm, use the **AA-BG MODE** key.

8.2.11. Press the **SETUP** key and adjust the lamp for maximum absorbance.

8.2.11.1. If the absorbance is >80, press the **GAIN** key and continue the lamp adjustment.

8.2.11.2. When the maximum absorbance is reached, turn the **SETUP** key to **OFF**.

8.2.12. Set the **TIME** key to 0.5 s.

8.2.13. Press the **AZ** (autozero) key. Absorbance should read zero.

8.2.14. Install the 10-cm burner head for air-acetylene analysis and the 5-cm head for nitrous oxide-acetylene.

8.2.15. Adjust the burner head height.

8.2.16. Set oxidant and acetylene flow from Table 8.2 in PE *Analytical Methods for AAS*. (source material 12.1).

8.2.17. Shut the burner shield door and light the flame using the flame **ON/OFF** key on the burner assembly.

8.2.18. Aspirate double-deionized water while the flame is lit.

8.2.19. Aspirate the standard and adjust the instrument for maximum absorbance.

8.3. Running samples.

8.3.1. Enter S1, S2, and S3 as directed for standards in *Analytical Methods for AAS*.

8.3.2. Reset **TIME** key to 3 to 6 s.

8.3.3. Press the signal **HOLD** key.

8.3.4. Select **AVERAGE** key if desired.

8.3.5. Aspirate the known standard and press the **READ** key.

8.3.6. Calculate the characteristic concentration (cc). The result should be within ±20% of the value in *Analytical Methods for AAS*.

8.3.7. Aspirate the calibration-curve standards and read the absorbance.

8.3.8. Switch the **MODE** key to **CONC** (concentration).

8.3.9. Aspirate the standards to set concentration keys as needed.

8.3.10. Read samples and QCs (blind and known).

8.3.11. Recalibrate the instrument with standards every 8 to 12 readings.

8.3.12. When finished, switch the flame **ON/OFF** key to **OFF**. Press the **CHECK FLOW** key on the auto burner control twice to relieve line pressure.

8.3.13. Turn the **POWER** switch on the automatic burner control to **OFF**.

8.3.14. Switch the PE 5000 to **STANDBY** mode.

9. Emergency Shutdown Procedure

9.1. In case of power failure, turn the **POWER** switch on the PE 5000 to **OFF**.

9.2. Turn the gas valves **OFF**.

9.3. Follow procedures for building power failure.

10. Calculations

10.1. Characteristic concentration (cc).

$$cc = \frac{C \times 0.0044}{A_s},$$

where cc = characteristic concentration of flame AA,
C = concentration of standard,
0.0044 = 1% absorbance, and
A_s = absorbance of standard.

11. Proper Waste Disposal Practices

11.1. Solid Waste

11.1.1. Solid waste contaminated with hazardous chemicals above the level of concern is not generated during the routine preparation of QC samples for analysis for inorganic contaminants.

11.1.2. If a solid waste is generated that may be contaminated at a level of concern, the appropriate paperwork is completed on a case-by-case basis.

11.1.2.1. A Waste Profile Request Form (WPRF) describing the solid waste is completed and sent to the Waste Management Group for review.

11.1.2.2. If the Waste Management Group determines that the solid waste is contaminated below the level of concern, the waste is disposed of as ordinary laboratory trash.

11.1.2.3. If the Waste Management Group determines that the solid waste is contaminated above the level of concern, pickup of the contaminated waste is requested as described in Sec. 9.3.

11.2. Liquid Waste

11.2.1. Liquid waste containing hazardous contaminants, such as solutions of trace metals, is accumulated in a coated glass jar in a secondary containment tray and is kept segregated from liquid waste contaminated with organic or radioactive substances or cyanide.

11.2.2. The bottle is labeled with a hazardous waste label and a label indicating its use for trace-metal waste.

11.2.3. The bottle is opened only for the period of time necessary to add waste to it.

11.2.4. When the bottle is full, it is capped and kept in the secondary containment tray pending pickup by the Waste Management Group.

11.2.5. A new bottle is labeled for further use.

11.3. Waste Pickup

11.3.1. Pickup by the Waste Management Group of solid waste or a full bottle of liquid waste containing trace metals is requested using the current Chemical Waste Disposal Request Form (CWDR). The current Waste

Profile Request Form (WPRF) which describes the waste is referenced on the CWDR.

11.3.2. The Waste Management Group picks up the waste for disposal in accord with Laboratory policy.

12. Source Materials

12.1. Perkin-Elmer Corp., *Analytical Methods for Atomic Absorption Spectroscopy* (Norwalk, CT, 1976).

12.2. Perkin-Elmer Corp., *Instructions: Zeeman/5000 System* (Norwalk, CT, 1982).

12.3. U.S. Environmental Protection Agency, "Methods for Chemical Analysis of Water and Wastes," EPA-600/4-79-020 (rev. March 1983).

12.4. U.S. Environmental Protection Agency, "Test Methods for Evaluation of Solid Waste: Laboratory Manual of Physical and Chemical Methods," SW-846 (Nov. 1986).

12.5. "Chemical, Hazardous, and Mixed Waste," Administrative Requirement 10-3, Chapter 1 in Los Alamos National Laboratory *Environment, Safety, and Health Manual* (most recent edition).

ZINC IN WATER AND SOIL EXTRACTS — FLAME AA

Analyte: Zinc	**Method No.:** EI165
Matrix: Water, waste water, and soil extracts	**Detection Limit:** 5.0 μg/L
Procedure: Flame atomic absorption	**Accuracy and Precision:** 100% ± 4.0% RSD
Effective Date: 09/23/91	**Authors:** Michael G. Bell Barbara J. Hemberger

SAFETY NOTE: Before beginning this procedure, read all of the Material Safety Data Sheets for the chemicals listed in Sec. 6. Read Sec. 4.3 of the EM-9 Safety Manual for information on personal protective clothing and equipment. Read Sec. 11 of this procedure and Source Material 12.5 for proper waste disposal practices.

1. Principle of Method

1.1. This procedure is based on Environmental Protection Agency (EPA) method 289.1 and SW-846 method 7950.

1.2. Zinc in solution may be readily determined by atomic absorption spectroscopy. The method is simple and rapid and is applicable to drinking, surface, and saline waters and in domestic and industrial wastes.

1.3. Drinking water free of particulate matter may be analyzed directly. Ground water, other aqueous samples, TCLP extracts, industrial wastes, soils, sludges, sediments, and other solid wastes require digestion before analysis.

2. Accuracy and Precision

2.1. The determination of zinc in nine in-house quality control samples (66 μg/L) over a nine-month period had a mean of 67.2 μg/L and a relative standard deviation (RSD) of 4.0%.

3. Collection and Storage of Samples

3.1. Preserve samples with nitric acid (HNO_3) at a pH <2.0. Complete analysis within six months.

4. Interferences

4.1. Contamination is of prime concern during sample preparation. The work area, including the bench top, should be periodically cleaned to eliminate environmental contamination.

4.2. Chemical interferences are matrix dependent.

4.3. Silica from glassware will grow into the sample solution during and following sample processing. Use sterile disposable 50-mL polypropylene centrifuge tubes in the sample digestion steps to control this problem.

5. Apparatus

5.1. Centrifuge tubes: 50-mL, sterile polypropylene.

5.2. Rainin pipettes with disposable tips.

5.3. Wash bottles: 125-mL, polypropylene, screw tops.

5.4. Hot plate: with aluminum heating block drilled to hold centrifuge tubes.

5.5. Perkin-Elmer 5000 atomic absorption spectrometer or equivalent.

5.6. Gases for the above instrument: air, acetylene, nitrous oxide, argon.

6. Reagents

6.1. Nitric acid (low-temperature redistilled acid, LTRD).

6.2. Hydrochloric acid (low-temperature redistilled acid, LTRD).

6.3. Double-deionized water.

6.4. ASTM Type I water (>10 MΩ/cm resistivity, <0.1 μmho/cm conductivity).

7. Sample Preparation Procedure

7.1. To determine total recoverable elements in water or waste water, take a 50-mL aliquot from an acid-preserved sample containing not more than 0.25% (wt/vol) total solids. Place the aliquot in a sterile disposable 50-mL polypropylene centrifuge tube.

7.1.1. Add 500 μL of LTRD HNO_3 and 250 μL of Ultrex or LTRD HCl to each sample.

7.1.2. Heat on a hot plate without boiling (approximately 85°C) until the final volume is reduced to 5-10 mL.

7.1.3. Loosely cover the tube with the cap and reflux for 30 min.

7.1.4. Allow the sample to cool and dilute to 50 mL with ASTM Type I water.

7.1.5. Run one digested blank and one digested spike with each digested batch.

7.1.6. Run a duplicate and a spike for 10-20% of the samples.

7.1.7. For TCLP samples, run a spike for every sample and run 20% duplicates.

8. Instrument Procedure

8.1. Power instrument and check gases.

8.1.1. Turn the **POWER** switch on the Perkin-Elmer (PE) 5000 atomic absorption (AA) spectrometer to **ON**.

8.1.2. Turn the **POWER** switch on the PE 5000 automatic burner control to **ON**.

8.1.3. Turn **ON** the air supply valve.

8.1.4. Check the pressure in the acetylene tank; if it is <100 psi, change the tank. Turn the **ACETYLENE SUPPLY** valve **ON**.

8.1.5. Turn **ON** the nitrous oxide supply valve, if necessary.

8.1.6. Turn the AA switch from **STANDBY** mode to **RUN**.

8.1.7. Make sure the exhaust hood is functioning.

8.1.8. Check the drain vessel and drain loop for fluid levels.

8.2. Instrument setup.

8.2.1. Insert the zinc lamp in the turret and plug it in.

8.2.2. Enter the **turret lamp number** on the keyboard.

8.2.3. Enter the recommended **lamp milliamps** (mA).

8.2.4. Enter the **lamp slit width** using the **HIGH SLIT** key for flame AA.

8.2.5. Enter the **lamp wavelength** using the **LAMBDA PEAK** key.

8.2.6. For **signal keys**, enter the **CONTINUOUS** key for setup.

8.2.7. Press the **RECORD ABSORBANCE** key.

8.2.8. Set the **MODE** key to **ABSORBANCE**.

8.2.9. If the wavelength is >300 nm, use the **AA-MODE** key.

8.2.10. If the wavelength is <300 nm, use the **AA-BG MODE** key.

8.2.11. Press the **SETUP** key and adjust the lamp for maximum absorbance.

8.2.11.1. If the absorbance is >80, press the **GAIN** key and continue the lamp adjustment.

8.2.11.2. When the maximum absorbance is reached, turn the **SETUP** key to **OFF**.

8.2.12. Set the **TIME** key to 0.5 s.

8.2.13. Press the **AZ** (autozero) key. Absorbance should read zero.

8.2.14. Install the 10-cm burner head for air-acetylene analysis and the 5-cm head for nitrous oxide-acetylene.

8.2.15. Adjust the burner head height.

8.2.16. Set oxidant and acetylene flow from Table 8.2 in PE *Analytical Methods for AAS*. (source material 12.1).

8.2.17. Shut the burner shield door and light the flame using the flame **ON/OFF** key on the burner assembly.

8.2.18. Aspirate double-deionized water while the flame is lit.

8.2.19. Aspirate the standard and adjust the instrument for maximum absorbance.

8.3. Running samples.

8.3.1. Enter S1, S2, and S3 as directed for standards in *Analytical Methods for AAS*.

8.3.2. Reset **TIME** key to 3 to 6 s.

8.3.3. Press the signal **HOLD** key.

8.3.4. Select **AVERAGE** key if desired.

8.3.5. Aspirate the known standard and press the **READ** key.

8.3.6. Calculate the characteristic concentration (cc). The result should be within ±20% of the value in *Analytical Methods for AAS*.

8.3.7. Aspirate the calibration-curve standards and read the absorbance.

8.3.8. Switch the **MODE** key to **CONC** (concentration).

8.3.9. Aspirate the standards to set concentration keys as needed.

8.3.10. Read samples and QCs (blind and known).

8.3.11. Recalibrate the instrument with standards every 8 to 12 readings.

8.3.12. When finished, press flame **ON/OFF** key to **OFF** to turn off the flame. Turn fuel and air values to **OFF**.

8.3.12.1. Press the **CHECK FLOW** key **twice** on the auto burner control to relieve line pressure.

8.3.13. Turn the power switch to the auto burner control off.

8.3.14. Switch the PE 5000 to **STANDBY** mode.

9. Emergency Shutdown Procedure

9.1. In case of power failure, turn the **POWER** switch on the PE 5000 to **OFF**.

9.2. Turn off the gas valves.

9.3. Follow procedures for building power failure.

10. Calculations

10.1. Characteristic concentration (cc).

$$cc = \frac{C \times 0.0044}{A_s},$$

where cc = characteristic concentration for flame AA,
C = concentration of standard,
0.0044 = 1% absorbance, and
A_s = absorbance of standard.

11. Proper Waste Disposal Practices

11.1. Solid waste.

11.1.1. Solid waste contaminated with hazardous chemicals above the level of concern is not normally generated during the routine preparation of QC samples for analysis for inorganic contaminants.

11.1.2. If a solid waste is generated that may be contaminated at a level of concern, the appropriate paperwork is completed on a case-by-case basis.

11.1.2.1. A Waste Profile Request Form (WPRF) describing the solid waste is completed and sent to the Waste Management group for review.

11.1.2.2. If the Waste Management group determines that the solid waste is contaminated below the level of concern, the waste is disposed of as ordinary laboratory trash.

11.1.2.3. If the Waste Management group determines that the solid waste is contaminated above the level of concern, pickup of the contaminated waste is requested as described in Sec. 11.3.

11.2. Liquid waste.

11.2.1. Liquid waste containing hazardous contaminants, such as solutions of trace metals, is accumulated in a coated glass jar in a secondary containment tray and is kept segregated from liquid waste contaminated with organic or radioactive substances or cyanide.

11.2.2. The bottle is labeled with a hazardous waste label and a label indicating its use for trace-metal waste.

11.2.3. The bottle is opened only for the time necessary to add waste to it.

11.2.4. When the bottle is full, it is capped and kept in the secondary containment tray pending pickup by the Waste Management group.

11.2.5. A new bottle is labeled for further use.

11.3. Waste pickup.

11.3.1. Pickup by the Waste Management group of solid waste or a full bottle of liquid waste containing trace metals is requested using the current Chemical Waste Disposal Request Form (CWDR). The current Waste

Profile Request Form (WPRF) that describes the waste is referenced on the CWDR.

11.3.2. The Waste Management group picks up the waste for disposal in accord with Laboratory policy.

12. Source Materials

12.1. Perkin-Elmer Corp., *Analytical Methods for Atomic Absorption Spectroscopy* (Norwalk, CT, 1976).

12.2. Perkin-Elmer Corp., *Instructions: Zeeman/5000 System* (Norwalk, CT, 1982).

12.3. U.S. Environmental Protection Agency, "Methods for Chemical Analysis of Water and Wastes," EPA-600/4-79-020 (rev. March 1983).

12.4. U.S. Environmental Protection Agency, "Test Methods for Evaluation of Solid Waste: Laboratory Manual of Physical and Chemical Methods," SW-846 (Nov. 1986).

12.5. "Chemical, Hazardous, and Mixed Waste," Administrative Requirement 10-3, Chapter 1 in Los Alamos National Laboratory *Environment, Safety, and Health Manual* (most recent edition).

NICKEL IN WATER AND SOIL EXTRACTS — FLAME AA

Analyte: Nickel	**Method No.:** EI170
Matrix: Water, waste water, and soil extracts	**Detection Limit:** 15μg/L
Procedure: Flame atomic absorption	**Accuracy and Precision:** 100% ± 5% RSD
Effective Date: 09/23/91	**Authors:** Michael G. Bell Barbara J. Hemberger

SAFETY NOTE: Before beginning this procedure, read all of the Material Safety Data Sheets for the chemicals listed in Sec. 6. Read Sec. 4.3 of the EM-9 Safety Manual for information on personal protective clothing and equipment. Read Sec. 11 of this procedure and Source Material 12.5 for proper waste disposal practices.

1. Principle of Method

1.1. This procedure is based on Environmental Protection Agency (EPA) method 249.1 and SW-846 method 7520.

1.2. Nickel in solution may be readily determined by atomic absorption spectroscopy (AAS). The method is simple and rapid and is applicable to Ni in drinking, surface, and saline waters and in domestic and industrial wastes.

1.3. Drinking water free of particulate matter may be analyzed directly. Ground water, other aqueous samples, TCLP extracts, industrial wastes, soils, sludges, sediments, and other solid wastes require digestion prior to analysis.

2. Accuracy and Precision

2.1. The determination of nickel in 15 in-house quality control samples (800 μg/L) over a 9-month period had a mean of 841 μg/L and a relative standard deviation (RSD) of 5%.

3. Collection and Storage of Samples

3.1. Preserve samples with nitric acid (HNO_3) at a pH <2.0. Complete analysis within six months.

4. Interferences

4.1. Contamination is of prime concern during sample preparation. The work area, including the bench top, should be periodically cleaned to eliminate environmental contamination.

4.2. Chemical interferences are matrix dependent.

4.3. Silica from the glassware will grow into the sample solution during and following sample processing. Use sterile disposable 50-mL polypropylene centrifuge tubes in the sample digestion steps to control this problem.

5. Apparatus

5.1. Centrifuge tubes: 50-mL, sterile polypropylene.

5.2. Rainin pipettes with disposable tips.

5.3. Wash bottles: 125-mL, polypropylene, screw tops.

5.4. Hot plate: with aluminum heating block drilled to hold centrifuge tubes.

5.5. Perkin-Elmer 5000 atomic absorption spectrometer or equivalent.

5.6. Gases for the above instrument: air, acetylene, nitrous oxide, argon.

6. Reagents

6.1. Nitric acid (low-temperature redistilled acid, LTRD).

6.2. Hydrochloric acid (low-temperature redistilled acid, LTRD).

6.3. Double-deionized water.

6.4. ASTM Type I water (>10 MΩ/cm resistivity, <0.1 μmho/cm conductivity).

7. Sample Preparation Procedure

7.1. To determine total recoverable elements in water or waste water, take a 50-mL aliquot from an acid-preserved sample containing not more than 0.25% (wt/vol) total solids. Place the aliquot in a sterile disposable 50-mL polypropylene centrifuge tube.

7.1.1. Add 500 μL of LTRD HNO_3 and 250 μL of Ultrex or LTRD HCl to each sample.

7.1.2. Heat on a hot plate without boiling (approximately 85°C) until the final volume is reduced to 5-10 mL.

7.1.3. Loosely cover the tube with the cap and reflux for 30 min.

7.1.4. Allow the sample to cool and then dilute to 50 mL with ASTM Type I water.

7.1.5. Run one digested blank and one digested spike with each digested batch.

7.1.6. Run a duplicate and a spike for 10-20% of the samples.

7.1.7. For TCLP samples, run a spike for every sample and run 20% duplicates.

8. Instrument Procedure

8.1. Power instrument and check gases.

8.1.1. Turn the **POWER** switch on the Perkin-Elmer (PE) 5000 atomic absorption (AA) spectrometer to **ON**.

8.1.2. Turn the **POWER** switch on the PE 5000 automatic burner control to **ON**.

8.1.3. Turn the **AIR SUPPLY** valve **ON**.

8.1.4. Check the pressure in the acetylene tank; if it is <100 psi, change the tank. Turn the **ACETYLENE SUPPLY** valve **ON**.

8.1.5. Turn the **NITROUS OXIDE SUPPLY** valve **ON**, if necessary.

8.1.6. Turn the AA switch from **STANDBY** mode to **RUN**.

8.1.7. Make sure the exhaust hood is functioning.

8.1.8. Make sure the fluids in the drain vessel and drain loop are at their proper levels.

8.2. Instrument setup.

8.2.1. Insert the nickel lamp in the turret and plug it in.

8.2.2. Enter the **turret lamp number** on the keyboard.

8.2.3. Enter the recommended **lamp milliamps** (mA).

8.2.4. Enter the **lamp slit width** using the **HIGH SLIT** key for flame AA.

8.2.5. Enter the **lamp wavelength** using the **LAMBDA PEAK** key.

8.2.6. For **signal keys**, enter the **CONTINUOUS** key for setup.

8.2.7. Press the **RECORD ABSORBANCE** key.

8.2.8. Set the **MODE** key to **ABSORBANCE**.

8.2.9. If the wavelength is >300 nm, use the **AA-MODE** key.

8.2.10. If the wavelength is <300 nm, use the **AA-BG MODE** key.

8.2.11. Press the **SETUP** key and adjust the lamp for maximum absorbance.

8.2.11.1. If the absorbance is >80, press the **GAIN** key and continue the lamp adjustment.

8.2.11.2. When the maximum absorbance is reached, turn the **SETUP** key to **OFF**.

8.2.12. Set the **TIME** key to 0.5 s.

8.2.13. Press the **AZ** (autozero) key. Absorbance should read zero.

8.2.14. Install the 10-cm burner head for air-acetylene analysis and the 5-cm head for nitrous oxide-acetylene.

8.2.15. Adjust the burner head height.

8.2.16. Set oxidant and acetylene flow from Table 8.2 in PE *Analytical Methods for AAS*. (source material 12.1).

8.2.17. Shut the burner shield door and light the flame using the flame **ON/OFF** key on the burner assembly.

8.2.18. Aspirate double-deionized water while the flame is lit.

8.2.19. Aspirate the standard and adjust the instrument for maximum absorbance.

8.3. Running samples.

8.3.1. Enter S1, S2, and S3 as directed for standards in *Analytical Methods for AAS*.

8.3.2. Reset **TIME** key to 3 to 6 s.

8.3.3. Press the signal **HOLD** key.

8.3.4. Select **AVERAGE** key if desired.

8.3.5. Aspirate the known standard and press the **READ** key.

8.3.6. Calculate the characteristic concentration (cc). The result should be within ±20% of the value in *Analytical Methods for AAS*.

8.3.7. Aspirate the calibration-curve standards and read the absorbance.

8.3.8. Switch the **MODE** key to **CONC** (concentration).

8.3.9. Aspirate the standards to set concentration keys as needed.

8.3.10. Read samples and QCs (blind and known).

8.3.11. Recalibrate the instrument with standards every 8 to 12 readings.

8.3.12. When finished, switch the flame **ON/OFF** key to **OFF**. Press the **CHECK FLOW** key on the auto burner control twice to relieve line pressure.

8.3.13. Turn the **POWER** switch on the automatic burner control to **OFF**.

8.3.14. Switch the PE 5000 to **STANDBY** mode.

9. Emergency Shutdown Procedure

9.1. In case of power failure, turn the **POWER** switch on the PE 5000 to **OFF**.

9.2. Turn the gas valves **OFF**.

9.3. Follow procedures for building power failure.

10. Calculations

10.1. Characteristic concentration (cc).

$$cc = \frac{C \times 0.0044}{A_s},$$

where cc = characteristic concentration of flame AA,
C = concentration of standard,
0.0044 = 1% absorbance, and
A_s = absorbance of standard.

11. Proper Waste Disposal Practices

11.1. Solid Waste

11.1.1. Solid waste contaminated with hazardous chemicals above the level of concern is not generated during the routine preparation of QC samples for analysis for inorganic contaminants.

11.1.2. If a solid waste is generated that may be contaminated at a level of concern, the appropriate paperwork is completed on a case-by-case basis.

11.1.2.1. A Waste Profile Request Form (WPRF) describing the solid waste is completed and sent to the Waste Management Group for review.

11.1.2.2. If the Waste Management Group determines that the solid waste is contaminated below the level of concern, the waste is disposed of as ordinary laboratory trash.

11.1.2.3. If the Waste Management Group determines that the solid waste is contaminated above the level of concern, pickup of the contaminated waste is requested as described in Sec. 9.3.

11.2. Liquid Waste

11.2.1. Liquid waste containing hazardous contaminants, such as solutions of trace metals, is accumulated in a coated glass jar in a secondary containment tray and is kept segregated from liquid waste contaminated with organic or radioactive substances or cyanide.

11.2.2. The bottle is labeled with a hazardous waste label and a label indicating its use for trace metal waste.

11.2.3. The bottle is opened only for the period of time necessary to add waste to it.

11.2.4. When the bottle is full, it is capped and kept in the secondary containment tray pending pickup by the Waste Management Group.

11.2.5. A new bottle is labeled for further use.

11.3. Waste Pickup

11.3.1. Pickup by the Waste Management Group of solid waste or a full bottle of liquid waste containing trace metals is requested using the current Chemical Waste Disposal Request Form (CWDR). The current Waste

Profile Request Form (WPRF) that describes the waste is referenced on the CWDR.

11.3.2. The Waste Management Group picks up the waste for disposal in accord with Laboratory policy.

12. Source Materials

12.1. Perkin-Elmer Corp., *Analytical Methods for Atomic Absorption Spectroscopy* (Norwalk, CT, 1976).

12.2. Perkin-Elmer Corp., *Instructions: Zeeman/5000 System* (Norwalk, CT, 1982).

12.3. U.S. Environmental Protection Agency, "Methods for Chemical Analysis of Water and Wastes," EPA-600/4-79-020 (rev. March 1983).

12.4. U.S. Environmental Protection Agency, "Test Methods for Evaluation of Solid Waste: Laboratory Manual of Physical and Chemical Methods," SW-846 (Nov. 1986).

12.5. "Chemical, Hazardous, and Mixed Waste," Administrative Requirement 10-3, Chapter 1 in Los Alamos National Laboratory *Environment, Safety, and Health Manual* (most recent edition).

POTASSIUM IN WATER AND SOIL EXTRACTS — FLAME AA

Analyte: Potassium	**Method No.:** EI175
Matrix: Water, waste water, and soil extracts	**Detection Limit:** 2 mg/L
Procedure: Flame atomic absorption	**Accuracy and Precision:** not determined
Effective Date: 09/23/91	**Authors:** Michael G. Bell Barbara J. Hemberger

SAFETY NOTE: Before beginning this procedure, read all of the Material Safety Data Sheets for the chemicals listed in Sec. 6. Read Sec. 4.3 of the EM-9 Safety Manual for information on personal protective clothing and equipment. Read Sec. 11 of this procedure and Source Material 12.5 for proper waste disposal practices.

1. Principle of Method

1.1. This procedure is based on Environmental Protection Agency (EPA) method 258.1 and SW-846 method 7610.

1.2. Potassium in solution may be readily determined by atomic absorption spectroscopy (AAS). The method is simple and rapid and is applicable to K in drinking, surface, and saline waters and in domestic and industrial wastes.

1.3. Drinking water free of particulate matter may be analyzed directly. Ground water, other aqueous samples, TCLP extracts, industrial wastes, soils, sludges, sediments, and other solid wastes require digestion before analysis.

2. Accuracy and Precision

2.1. The accuracy and precision of the method for in-house quality control samples has not yet been determined.

3. Collection and Storage of Samples

3.1. Preserve samples with nitric acid (HNO_3) at a pH <2.0. Complete analysis within six months.

4. Interferences

4.1. Contamination is of prime concern during sample preparation. The work area, including the bench top, should be periodically cleaned to eliminate environmental contamination.

4.2. Chemical interferences are matrix dependent and can be corrected by the addition of matrix modifiers. Refer to Perkin-Elmer (PE) Analytical Methods for AAS for appropriate modifier.

4.3. Silica from the glassware will grow into the sample solution during and following sample processing. Use sterile disposable 50-mL polypropylene centrifuge tubes in the sample digestion steps to control this problem.

5. Apparatus

5.1. Centrifuge tubes: 50-mL, sterile polypropylene.

5.2. Rainin pipettes with disposable tips.

5.3. Wash bottles: 125-mL, polypropylene, screw tops.

5.4. Hot plate: with aluminum heating block drilled to hold centrifuge tubes.

5.5. Perkin-Elmer 5000 atomic absorption spectrometer or equivalent.

5.6. Gases for the above instrument: air, acetylene, nitrous oxide, argon.

6. Reagents

6.1. Nitric acid (low-temperature redistilled acid, LTRD).

6.2. Hydrochloric acid (low-temperature redistilled acid, LTRD).

6.3. Double-deionized water.

6.4. ASTM Type I water (>10 MΩ/cm resistivity, <0.1 μmho/cm conductivity).

7. Sample Preparation Procedure

7.1. To determine total recoverable elements in water or waste water, take a 50-mL aliquot from an acid-preserved sample containing not more than 0.25% (wt/vol) total solids. Place the aliquot in a sterile disposable 50-mL polypropylene centrifuge tube.

7.1.1. Add 500 μL of LTRD HNO_3 and 250 μL of Ultrex or LTRD HCl to each sample.

7.1.2. Heat on a hot plate without boiling (approximately 85°C) until the final volume is reduced to 5-10 mL.

7.1.3. Loosely cover the tube with the cap and reflux for 30 min.

7.1.4. Allow the sample to cool and dilute to 50 mL with ASTM Type I water.

7.1.5. Run one digested blank and one digested spike with each digested batch.

7.1.6. Run a duplicate and a spike for 10-20% of the samples.

7.1.7. For TCLP samples, run a spike for every sample and run 20% duplicates.

8. Instrument Procedure

8.1. Power instrument and check gases.

8.1.1. Turn the **POWER** switch on the Perkin-Elmer (PE) 5000 atomic absorption (AA) spectrometer to **ON**.

8.1.2. Turn the **POWER** switch on the PE 5000 automatic burner control to **ON**.

8.1.3. Turn the **AIR SUPPLY** valve **ON**.

8.1.4. Check the pressure in the acetylene tank; if it is <100 psi, change the tank. Turn the **ACETYLENE SUPPLY** valve **ON**.

8.1.5. Turn the **NITROUS OXIDE SUPPLY** valve **ON**, if necessary.

8.1.6. Turn the AA switch from **STANDBY** mode to **RUN**.

8.1.7. Make sure the exhaust hood is functioning.

8.1.8. Make sure the fluids in the drain vessel and drain loop are at their proper levels.

8.2. Instrument setup.

8.2.1. Insert the potassium lamp in the turret and plug it in.

8.2.2. Enter the **turret lamp number** on the keyboard.

8.2.3. Enter the recommended **lamp milliamps** (mA).

8.2.4. Enter the **lamp slit width** using the **HIGH SLIT** key for flame AA.

8.2.5. Enter the **lamp wavelength** using the **LAMBDA PEAK** key.

8.2.6. For **signal keys**, enter the **CONTINUOUS** key for setup.

8.2.7. Press the **RECORD ABSORBANCE** key.

8.2.8. Set the **MODE** key to **ABSORBANCE**.

8.2.9. If the wavelength is >300 nm, use the **AA-MODE** key.

8.2.10. If the wavelength is <300 nm, use the **AA-BG MODE** key.

8.2.11. Press the **SETUP** key and adjust the lamp for maximum absorbance.

8.2.11.1. If the absorbance is >80, press the **GAIN** key and continue the lamp adjustment.

8.2.11.2. When the maximum absorbance is reached, turn the **SETUP** key to **OFF**.

8.2.12. Set the **TIME** key to 0.5 s.

8.2.13. Press the **AZ** (autozero) key. Absorbance should read zero.

8.2.14. Install the 10-cm burner head for air-acetylene analysis and the 5-cm head for nitrous oxide-acetylene.

8.2.15. Adjust the burner head height.

8.2.16. Set oxidant and acetylene flow from Table 8.2 in PE *Analytical Methods for AAS*. (source material 12.1).

8.2.17. Shut the burner shield door and light the flame using the flame **ON/OFF** key on the burner assembly.

8.2.18. Aspirate double-deionized water while the flame is lit.

8.2.19. Aspirate the standard and adjust the instrument for maximum absorbance.

8.3. Running samples.

8.3.1. Enter S1, S2, and S3 as directed for standards in *Analytical Methods for AAS*.

8.3.2. Reset **TIME** key to 3 to 6 s.

8.3.3. Press the signal **HOLD** key.

8.3.4. Select **AVERAGE** key if desired.

8.3.5. Aspirate the known standard and press the **READ** key.

8.3.6. Calculate the characteristic concentration (cc). The result should be within ±20% of the value in *Analytical Methods for AAS*.

8.3.7. Aspirate the calibration-curve standards and read the absorbance.

8.3.8. Switch the **MODE** key to **CONC** (concentration).

8.3.9. Aspirate the standards to set concentration keys as needed.

8.3.10. Read samples and QCs (blind and known).

8.3.11. Recalibrate the instrument with standards every 8 to 12 readings.

8.3.12. When finished, switch the flame **ON/OFF** key to **OFF**. Press the **CHECK FLOW** key on the auto burner control twice to relieve line pressure.

8.3.13. Turn the **POWER** switch on the automatic burner control to **OFF**.

8.3.14. Switch the PE 5000 to **STANDBY** mode.

9. Emergency Shutdown Procedure

9.1. In case of power failure, turn the **POWER** switch on the PE 5000 to **OFF**.

9.2. Turn the gas valves **OFF**.

9.3. Follow procedures for building power failure.

10. Calculations

10.1. Characteristic concentration (cc).

$$cc = \frac{C \times 0.0044}{A_s},$$

where cc = characteristic concentration for flame AA,
C = concentration of standard,
0.0044 = 1% absorbance, and
A_s = absorbance of standard.

11. Proper Waste Disposal Practices

11.1. Solid Waste

11.1.1. Solid waste contaminated with hazardous chemicals above the level of concern is not generated during the routine preparation of QC samples for analysis for inorganic contaminants.

11.1.2. If a solid waste is generated that may be contaminated at a level of concern, the appropriate paperwork is completed on a case-by-case basis.

11.1.2.1. A Waste Profile Request Form (WPRF) describing the solid waste is completed and sent to the Waste Management Group for review.

11.1.2.2. If the Waste Management Group determines that the solid waste is contaminated below the level of concern, the waste is disposed of as ordinary laboratory trash.

11.1.2.3. If the Waste Management Group determines that the solid waste is contaminated above the level of concern, pickup of the contaminated waste is requested as described in Sec. 9.3.

11.2. Liquid Waste

11.2.1. Liquid waste containing hazardous contaminants, such as solutions of trace metals, is accumulated in a coated glass jar in a secondary containment tray and is kept segregated from liquid waste contaminated with organic or radioactive substances or cyanide.

11.2.2. The bottle is labeled with a hazardous waste label and a label indicating its use for trace-metal waste.

11.2.3. The bottle is opened only for the period of time necessary to add waste to it.

11.2.4. When the bottle is full, it is capped and kept in the secondary containment tray pending pickup by the Waste Management Group.

11.2.5. A new bottle is labeled for further use.

11.3. Waste Pickup

11.3.1. Pickup by the Waste Management Group of solid waste or a full bottle of liquid waste containing trace metals is requested using the current Chemical Waste Disposal Request Form (CWDR). The current Waste

Profile Request Form (WPRF) that describes the waste is referenced on the CWDR.

11.3.2. The Waste Management Group picks up the waste for disposal in accord with Laboratory policy.

12. Source Materials

12.1. Perkin-Elmer Corp., *Analytical Methods for Atomic Absorption Spectroscopy* (Norwalk, CT, 1976).

12.2. Perkin-Elmer Corp., *Instructions: Zeeman/5000 System* (Norwalk, CT, 1982).

12.3. U.S. Environmental Protection Agency, "Methods for Chemical Analysis of Water and Wastes," EPA-600/4-79-020 (rev. March 1983).

12.4. U.S. Environmental Protection Agency, "Test Methods for Evaluation of Solid Waste: Laboratory Manual of Physical and Chemical Methods," SW-846 (Nov. 1986).

12.5. "Chemical, Hazardous, and Mixed Waste," Administrative Requirement 10-3, Chapter 1 in Los Alamos National Laboratory *Environment, Safety, and Health Manual* (most recent edition).

SELENIUM IN WATER AND SOIL EXTRACTS — GRAPHITE FURNACE AA

Analtye: Selenium	**Method No.:** EI185
Matrix: Water, waste water, and soil extracts	**Detection Limit:** 2.0 μg/L
Procedure: Graphite furnace atomic absorption	**Accuracy and Precision:** 96% ± 1.04% RSD
Effective Date: 09/25/91	**Authors:** Michael G. Bell Barbara J. Hemberger

SAFETY NOTE: Before beginning this procedure, read all of the Material Safety Data Sheets for the chemicals listed in Sec. 6. Read Sec. 4.3 of the EM-9 Safety Manual for information on personal protective clothing and equipment.

1. Principle of Method

1.1. This procedure is based on Environmental Protection Agency (EPA) method 270.2 and SW846 method 7740.

1.1. Selenium in solution may be readily determined by graphite furnace atomic absorption spectroscopy. The method is applicable to Se in drinking, surface, and saline waters and in domestic and industrial wastes.

1.3. Drinking water free of particulate matter may be analyzed directly. Ground water, other aqueous samples, TCLP extracts, industrial wastes, soils, sludges, sediments, and other solid wastes require digestion before analysis.

2. Accuracy and Precision

2.1. The determination of selenium in 18 in-house quality control samples (9.7 μg/L) over an 8-month period had a mean of 10.1 μg/L and a relative standard deviation (RSD) of 1.04%.

3. Collection and Storage of Samples.

3.1. Preserve samples with nitric acid (HNO_3) at a pH <2.0. Complete analysis within 6 months.

4. Interferences

4.1. Contamination is of prime concern during sample preparation. Periodically clean the work area, including the bench top, to eliminate environmental contamination. Use acid-washed sample cups in the autosampler.

4.2. Chemical interferences can be controlled by the addition of a matrix modifier to all samples and standards. Refer to Perkin-Elmer chart 0993-8199 Rev. D (11/89), or to the PE Methods of Analysis for AAS for the appropriate matrix modifier.

4.3. Silica from the glassware will grow into the sample solution during and following sample processing. To control this problem, use disposable sterile 50-mL polypropylene centrifuge tubes in the sample digestion steps.

5. Apparatus

5.1. Centrifuge tubes: 50-mL, sterile polypropylene.

5.2. Rainin pipettes with disposable tips.

5.3. Wash bottles: 125-mL, polypropylene, screw tops.

5.4. Hot plate: with aluminum heating block drilled to hold centrifuge tubes.

5.5. Perkin-Elmer 5000 atomic absorption instrument: equipped with a Zeeman graphite furnace or equivalent.

5.6. Required gas for the above instrument is ultrapure argon.

6. Reagents

6.1. Nitric acid (low-temperature redistilled acid, LTRD).

6.2. Hydrochloric acid (low-temperature redistilled acid, LTRD).

6.3. Double-deionized water.

6.4. ASTM Type I water (>10 MΩ/cm resistivity, >0.1 μmho/cm conductivity).

6.5. Appropriate matrix modifier for all samples, standards, and QC's.

6.6. Secondary standards for making the appropriate standard curves.

7. Sample Preparation Procedure

7.1. To determine total recoverable elements in water, waste water, and soil extracts, take a 50-mL aliquot from an acid preserved sample containing not more than 0.25% (wt/vol) total solids. Place the aliquot in a sterile 50-mL disposable polypropylene centrifuge tube.

7.1.1. Add 500 μL of LTRD HNO_3 and 250 μL of Ultrex or LTRD HCl to each sample.

7.1.2. Heat on a hot plate without boiling (approximately 85°C) until the volume is reduced to 5-10 mL.

7.1.3. Loosely cover the tube with the cap and reflux for 30 min.

7.1.4. Allow the sample to cool, and dilute to 50 mL with ASTM Type I water.

7.1.5. Run one digested blank and one digested spike for each digested batch.

7.1.6. Run a duplicate and a spike for 10-20% of the samples.

7.1.7. For TCLP samples, run a spike for every sample and 20% duplicates.

7.1.8. The analysis should be performed before the EPA regulatory holding times expire.

7.1.9. Add sample and standards to acid-cleaned sample cups.

8. Instrument Procedure

8.1. Instrument power and gases check.

8.1.1. Turn the **POWER SWITCH** to the PE5000 Atomic Absorption (AA) to **ON**.

8.1.2. Turn **ON** the argon supply valve after checking the pressure at the tank. Pressure must be over 100 psi or the tank must be changed.

8.1.3. Turn the AA switch from **STANDBY** mode to **RUN**.

8.1.4. Make sure the exhaust hood over the graphite furnace is functioning.

8.2. Instrument setup.

8.2.1. Insert the selenium lamp into the turret oriented toward the ETVAA and plug it in.

8.2.2. Enter **turret lamp number** into keyboard.

8.2.3. Enter recommended **lamp milliamps** (mA) or **watts** depending on lamp type (EDL/HCL).

8.2.3.1. Warm up the EDL and/or HCL lamp for a minimum of 20 min.

8.2.4. Enter **lamp slit width** using **LOW SLIT** key for ETVAA.

8.2.5. Enter **lamp wavelength** using **LAMBDA PEAK** key.

8.2.6. Turn AA switch inside lamp housing to **ICP/ZAA** position.

8.3. Keyboard setup.

8.3.1. Set **SIGNAL** key to **PK AREA** (peak area).

8.3.2. Turn **REC ABS** (record absorbance) signal key **ON**.

8.3.3. Enter **AVG** (average) number (if used).

8.3.4. Enter **CONC MODE** (concentration).

8.4. Furnace setup.

8.4.1. Press **ZAA** key.

8.4.2. Turn **ACCESSORY** knob to **ON** position.

8.4.3. Turn chiller **ON** and check that the water level is above the coils.

8.4.4. Check that the water bottle for distilled water rinse on the autosampler is full.

8.4.5. Turn **ON** the HGA-500 programmer.

8.4.5.1. Enter the temperature program for the element from the ETVAA procedure manual and store the procedure number.

8.5. Computer setup.

8.5.1. Turn PE AA Data System 10 computer **master switch** to **ON**.

8.5.2. Set up ID/WT file.

8.5.3. Turn **print button** on PE5000 keyboard **ON** and store the program.

8.6. Set up autosampler.

8.6.1. Recalibrate the standard curve every 8 to 12 samples.

8.6.2. Enter the number of standards (# stds).

8.6.3. Enter the last sample number (last samp).

8.6.4. Enter the sample volume (samp vol).

8.6.5. Enter the alternate volume (alt vol) for the matrix modifier if used.

8.6.6. Enter the instrument program number (inst prog).

8.6.7. Enter the HGA program number (HGA prog).

8.7. Graphite furnace setup.

8.7.1. Open the furnace and clean or replace the graphite tube. Use the tube with or without the platform depending on the element.

8.7.2. If inserting a new tube, condition it with the manual temperature key.

8.7.3. Using the alignment tool, reinsert the graphite tube and close the furnace.

8.7.4. Using the manual temperature key, set the pyrometer to the atomization temperature of the element and balance the lights (red/green) using the calibration (CAL) knob.

8.7.5. Place the AS40 in **STANDBY** mode and align the autosampler arm. Check the depth of the sample delivery inside the tube and inside the samples. Exit **STANDBY** mode.

8.7.6. Remove and check the furnace lenses. Reinsert the lenses and check the absorbance. If the absorbance reads above 0.100, clean the lenses.

8.7.7. Put samples and standards into the autosampler tray and cover with the dust cover to prevent contamination.

8.7.8. Put the matrix modifier in the holder position, if required.

8.7.9. Check the blank and standards manually.

8.7.10. Calculate the characteristic concentration (cc). If it is within ±20% of chart value (0993-8199 Rev. D 11/89) start the run.

8.7.11. Enter **collect data** mode on PE Data System 10 computer and follow instructions.

8.7.12. After run is complete, press to **DISK** key on PE Data System 10 **twice**.

8.7.13. Select **report** mode on the computer, follow instructions, and print the out final report.

8.7.14. When finished, shut off the chiller, argon gas supply, lamps, EDL power supply, and computer.

8.7.15 Place the autosampler, HGA Programmer,and PE5000 in standby mode.

9. Emergency Shutdown Procedure

9.1. In case of power failure, turn **POWER SWITCH** on PE5000 AA to **OFF**.

9.2. Turn **off** the **gas valves**.

9.3. Follow building power failure procedures.

10. Calculations

10.1. Characteristic concentration (cc).

$$cc = \frac{C \times V \times 0.0044}{A_s},$$

where cc = characteristic concentration for ETVAA,
C = concentration of standard (μg/L),
V = sample aliquot (μL),
A_s = absorbance of standard, and
0.0044 = 1% absorbance.

11. Source Material

11.1. *Analytical Methods for Atomic Absorption Spectrophotometry*, (Perkin-Elmer, Norwalk, Conn., 1976).

11.2. *Instructions: Zeeman/5000 System*, (Perkin-Elmer, Norwalk, Conn., 1982).

11.3. Methods for Chemical Analysis of Water and Wastes, EPA-600/4-79-020 U.S. Environmental Protection Agency, (rev. March 1983).

11.4. Perkin-Elmer chart 0993-8199 Rev. D (11/89).

11.5. "Test Methods for Evaluation of Solid Waste: Laboratory Manual of Physical and Chemical Methods," EPA report no. SW-846 (November 1986).

SILVER IN WATER AND SOIL EXTRACTS — FLAME AA

Analyte: Silver	**Method No.:** EI190
Matrix: Water, waste water, and soil extracts	**Detection Limit:** 10 μg/L
Procedure: Flame atomic absorption	**Accuracy and Precision:** 100% ± 1.2% RSD
Effective Date: 09/23/91	**Authors:** Michael G. Bell Barbara J. Hemberger

SAFETY NOTE: Before beginning this procedure, read all of the Material Safety Data Sheets for the chemicals listed in Sec. 6. Read Sec. 4.3 of the EM-9 Safety Manual for information on personal protective clothing and equipment. Read Sec. 11 of this procedure and Source Material 12.5 for proper waste disposal practices.

1. Principle of Method

1.1. This procedure is based on Environmental Protection Agency (EPA) method 272.1 and SW-846 method 7760.

1.2. Silver in solution may be readily determined by atomic absorption spectroscopy (AAS). The method is simple and rapid and is applicable to Ag in drinking, surface, and saline waters and in domestic and industrial wastes.

1.3. Drinking water free of particulate matter may be analyzed directly. Ground water, other aqueous samples, TCLP extracts, industrial wastes, soils, sludges, sediments, and other solid wastes require digestion before analysis.

2. Accuracy and Precision

2.1. The determination of silver in 88 in-house quality control samples (500 μg/L) over a 9-month period had a mean of 0.494 μg/L and a relative standard deviation (RSD) of 1.2%.

3. Collection and Storage of Samples

3.1. Preserve samples with nitric acid (HNO_3) at a pH <2.0. Complete analysis within six months.

4. Interferences

4.1. Contamination is of prime concern during sample preparation. The work area, including the bench top, should be periodically cleaned to eliminate environmental contamination.

4.2. Chemical interferences are matrix dependent.

4.3. Silica from the glassware will grow into the sample solution during and following sample processing. Use sterile disposable 50-mL polypropylene centrifuge tubes in the sample digestion steps to control this problem.

5. Apparatus

5.1. Centrifuge tubes: 50-mL, sterile polypropylene.

5.2. Rainin pipettes with disposable tips.

5.3. Wash bottles: 125-mL, polypropylene, screw tops.

5.4. Hot plate: with aluminum heating block drilled to hold centrifuge tubes.

5.5. Perkin-Elmer 5000 atomic absorption spectrometer or equivalent.

5.6. Gases for the above instrument: air, acetylene, nitrous oxide, argon.

6. Reagents

6.1. Nitric acid (low-temperature redistilled acid, LTRD).

6.2. Hydrochloric acid (low-temperature redistilled acid, LTRD).

6.3. Double-deionized water.

6.4. ASTM Type I water (>10 MΩ/cm resistivity, <0.1 μmho/cm conductivity).

7. Sample Preparation Procedure

7.1. To determine total recoverable elements in water or waste water, take a 50-mL aliquot from an acid-preserved sample containing not more than 0.25% (wt/vol) total solids. Place the aliquot in a sterile disposable 50-mL polypropylene centrifuge tube.

7.1.1. Add 500 μL of LTRD HNO_3 and 250 μL of Ultrex or LTRD HCl to each sample.

7.1.2. Heat on a hot plate without boiling (approximately 85°C) until the final volume is reduced to 5-10 mL.

7.1.3. Loosely cover the tube with the cap and reflux for 30 min.

7.1.4. Allow the sample to cool and dilute to 50 mL with ASTM Type I water.

7.1.5. Run one digested blank and one digested spike with each digested batch.

7.1.6. Run a duplicate and a spike for 10-20% of the samples.

7.1.7. For TCLP samples, run a spike for every sample and run 20% duplicates.

7.1.8. The analysis should be performed before the regulatory (EPA SW846) holding times expire.

8. Instrument Procedure

8.1. Power instrument and check gases.

8.1.1. Turn the **POWER** switch on the Perkin-Elmer (PE) 5000 atomic absorption (AA) spectrometer to **ON**.

8.1.2. Turn the **POWER** switch on the PE 5000 automatic burner control to **ON**.

8.1.3. Turn the **AIR SUPPLY** valve **ON**.

8.1.4. Check the pressure in the acetylene tank; if it is <100 psi, change the tank. Turn the **ACETYLENE SUPPLY** valve **ON**.

8.1.5. Turn the **NITROUS OXIDE SUPPLY** valve **ON**, if necessary.

8.1.6. Turn the AA switch from **STANDBY** mode to **RUN**.

8.1.7. Make sure the exhaust hood is functioning.

8.1.8. Make sure the fluids in the drain vessel and drain loop are at their proper levels.

8.2. Instrument setup.

8.2.1. Insert the silver lamp in the turret and plug it in.

8.2.2. Enter the **turret lamp number** on the keyboard.

8.2.3. Enter the recommended **lamp milliamps** (mA).

8.2.4. Enter the **lamp slit width** using the **HIGH SLIT** key for flame AA.

8.2.5. Enter the **lamp wavelength** using the **LAMBDA PEAK** key.

8.2.6. For **signal keys**, enter the **CONTINUOUS** key for setup.

8.2.7. Press the **RECORD ABSORBANCE** key.

8.2.8. Set the **MODE** key to **ABSORBANCE.**

8.2.9. If the wavelength is >300 nm, use the **AA-MODE** key.

8.2.10. If the wavelength is <300 nm, use the **AA-BG MODE** key.

8.2.11. Press the **SETUP** key and adjust the lamp for maximum absorbance.

8.2.11.1. If the absorbance is >80, press the **GAIN** key and continue the lamp adjustment.

8.2.11.2. When the maximum absorbance is reached, turn the **SETUP** key to **OFF.**

8.2.12. Set the **TIME** key to 0.5 s.

8.2.13. Press the **AZ** (autozero) key. Absorbance should read zero.

8.2.14. Install the 10-cm burner head for air-acetylene analysis and the 5-cm head for nitrous oxide-acetylene.

8.2.15. Adjust the burner head height.

8.2.16. Set oxidant and acetylene flow from Table 8.2 in PE *Analytical Methods for AAS.* (source material 12.1).

8.2.17. Shut the burner shield door and light the flame using the flame **ON/OFF** key on the burner assembly.

8.2.18. Aspirate double-deionized water while the flame is lit.

8.2.19. Aspirate the standard and adjust the instrument for maximum absorbance.

8.3. Running samples.

8.3.1. Enter S1, S2, and S3 as directed for standards in *Analytical Methods for AAS.*

8.3.2. Reset **TIME** key to 3 to 6 s.

8.3.3. Press the signal **HOLD** key.

8.3.4. Select **AVERAGE** key if desired.

8.3.5. Aspirate the known standard and press the **READ** key.

8.3.6. Calculate the characteristic concentration (cc). The result should be within ±20% of the value in *Analytical Methods for AAS*.

8.3.7. Aspirate the calibration-curve standards and read the absorbance.

8.3.8. Switch the **MODE** key to **CONC** (concentration).

8.3.9. Aspirate the standards to set concentration keys as needed.

8.3.10. Read samples and QCs (blind and known).

8.3.11. Recalibrate the instrument with standards every 8 to 12 readings.

8.3.12. When finished, switch the flame **ON/OFF** key to **OFF**. Press the **CHECK FLOW** key on the auto burner control twice to relieve line pressure.

8.3.13. Turn the **POWER** switch on the automatic burner control to **OFF**.

8.3.14. Switch the PE 5000 to **STANDBY** mode.

9. Emergency Shutdown Procedure

9.1. In case of power failure, turn the **POWER** switch on the PE 5000 to **OFF**.

9.2. Turn the gas valves **OFF**.

9.3. Follow procedures for building power failure.

10. Calculations

10.1. Characteristic concentration (cc).

$$cc = \frac{C \times 0.0044}{A_s},$$

where cc = characteristic concentration of flame AA,
C = concentration of standard,
0.0044 = 1% absorbance, and
A_s = absorbance of standard.

11. Proper Waste and Disposal Practices

11.1. Solid Waste

11.1.1. Solid waste contaminated with hazardous chemicals above the level of concern is not generated during the routine preparation of QC samples for analysis for inorganic contaminants.

11.1.2. If a solid waste is generated that may be contaminated at a level of concern, the appropriate paperwork is completed on a case-by-case basis.

11.1.2.1. A Waste Profile Request Form (WPRF) describing the solid waste is completed and sent to the Waste Management Group for review.

11.1.2.2. If the Waste Management Group determines that the solid waste is contaminated below the level of concern, the waste is disposed of as ordinary laboratory trash.

11.1.2.3. If the Waste Management Group determines that the solid waste is contaminated above the level of concern, pickup of the contaminated waste is requested as described in Sec. 9.3.

11.2. Liquid Waste

11.2.1. Liquid waste containing hazardous contaminants, such as solutions of trace metals, is accumulated in a coated glass jar in a secondary containment tray and is kept segregated from liquid waste contaminated with organic or radioactive substances or cyanide.

11.2.2. The bottle is labeled with a hazardous waste label and a label indicating its use for trace-metal waste.

11.2.3. The bottle is opened only for the period of time necessary to add waste to it.

11.2.4. When the bottle is full, it is capped and kept in the secondary containment tray pending pickup by the Waste Management Group.

11.2.5. A new bottle is labeled for further use.

11.3. Waste Pickup

11.3.1. Pickup by the Waste Management Group of solid waste or a full bottle of liquid waste containing trace metals is requested using the current Chemical Waste Disposal Request Form (CWDR). The current Waste

Profile Request Form (WPRF) that describes the waste is referenced on the CWDR.

11.3.2. The Waste Management Group picks up the waste for disposal in accord with Laboratory policy.

12. Source Materials

12.1. Perkin-Elmer Corp., *Analytical Methods for Atomic Absorption Spectroscopy* (Norwalk, CT, 1976).

12.2. Perkin-Elmer Corp., *Instructions: Zeeman/5000 System* (Norwalk, CT, 1982).

12.3. U.S. Environmental Protection Agency, "Methods for Chemical Analysis of Water and Wastes," EPA-600/4-79-020 (rev. March 1983).

12.4. U.S. Environmental Protection Agency, "Test Methods for Evaluation of Solid Waste: Laboratory Manual of Physical and Chemical Methods," SW-846 (Nov. 1986).

12.5. "Chemical, Hazardous, and Mixed Waste," Administrative Requirement 10-3, Chapter 1 in Los Alamos National Laboratory *Environment, Safety, and Health Manual* (most recent edition).

SODIUM IN WATER AND SOIL EXTRACTS — FLAME AA

Analyte: Sodium	**Method No.:** EI195
Matrix: Water, waste water, and soil extracts	**Detection Limit:** 2 mg/L
Procedure: Flame atomic absorption	**Accuracy and Precision:** not determined
Effective Date: 09/23/91	**Authors:** Michael G. Bell Barbara J. Hemberger

SAFETY NOTE: Before beginning this procedure, read all of the Material Safety Data Sheets for the chemicals listed in Sec. 6. Read Sec. 4.3 of the EM-9 Safety Manual for information on personal protective clothing and equipment. Read Sec. 11 of this procedure and Source Material 12.5 for proper waste disposal practices.

1. Principle of Method

1.1. This procedure is based on Environmental Protection Agency (EPA) method 273.1 and SW-846 method 7770.

1.2. Sodium in solution may be readily determined by atomic absorption spectroscopy (AAS). The method is simple and rapid and is applicable to Na in drinking, surface, and saline waters and in domestic and industrial wastes.

1.3. Drinking water free of particulate matter may be analyzed directly. Ground water, other aqueous samples, TCLP extracts, industrial wastes, soils, sludges, sediments, and other solid wastes require digestion before analysis.

2. Accuracy and Precision

2.1. The accuracy and precision of the method for in-house quality control samples has not yet been determined.

3. Collection and Storage of Samples

3.1. Preserve samples with nitric acid (HNO_3) at a pH <2.0. Complete analysis within six months.

4. Interferences

4.1. Contamination is of prime concern during sample preparation. The work area, including the bench top, should be periodically cleaned to eliminate environmental contamination.

4.2. Chemical interferences are matrix dependent and can be corrected by the addition of matrix modifiers. Refer to the Perkin-Elmer (PE) Analytical Methods for AAS for appropriate modifier.

4.3. Silica from the glassware will grow into the sample solution during and following sample processing. Use sterile disposable 50-mL polypropylene centrifuge tubes in the sample digestion steps to control this problem.

5. Apparatus

5.1. Centrifuge tubes: 50-mL, sterile polypropylene.

5.2. Rainin pipettes with disposable tips.

5.3. Wash bottles: 125-mL, polypropylene, screw tops.

5.4. Hot plate: with aluminum heating block drilled to hold centrifuge tubes.

5.5. Perkin-Elmer 5000 atomic absorption spectrometer or equivalent.

5.6. Gases for the above instrument: air, acetylene, nitrous oxide, argon.

6. Reagents

6.1. Nitric acid (low-temperature redistilled acid, LTRD).

6.2. Hydrochloric acid (low-temperature redistilled acid, LTRD).

6.3. Double-deionized water.

6.4. ASTM Type I water (>10 MΩ/cm resistivity, <0.1 μmho/cm conductivity).

7. Sample Preparation Procedure

7.1. To determine total recoverable elements in water or waste water, take a 50-mL aliquot from an acid-preserved sample containing not more than 0.25% (wt/vol) total solids. Place the aliquot in a sterile disposable 50-mL polypropylene centrifuge tube.

7.1.1. Add 500 μL of LTRD HNO_3 and 250 μL of Ultrex or LTRD HCl to each sample.

7.1.2. Heat on a hot plate without boiling (approximately 85°C) until the final volume is reduced to 5-10 mL.

7.1.3. Loosely cover the tube with the cap and reflux for 30 min.

7.1.4. Allow the sample to cool and dilute to 50 mL with ASTM Type I water.

7.1.5. Run one digested blank and one digested spike with each digested batch.

7.1.6. Run a duplicate and a spike for 10-20% of the samples.

7.1.7. For TCLP samples, run a spike for every sample and run 20% duplicates.

8. Instrument Procedure

8.1. Power instrument and check gases.

8.1.1. Turn the **POWER** switch on the Perkin-Elmer (PE) 5000 atomic absorption (AA) spectrometer to **ON**.

8.1.2. Turn the **POWER** switch on the PE 5000 automatic burner control to **ON**.

8.1.3. Turn the **AIR SUPPLY** valve **ON**.

8.1.4. Check the pressure in the acetylene tank; if it is <100 psi, change the tank. Turn the **ACETYLENE SUPPLY** valve **ON**.

8.1.5. Turn the **NITROUS OXIDE SUPPLY** valve **ON**, if necessary.

8.1.6. Turn the AA switch from **STANDBY** mode to **RUN**.

8.1.7. Make sure the exhaust hood is functioning.

8.1.8. Make sure the fluids in the drain vessel and drain loop are at their proper levels.

8.2. Instrument setup.

8.2.1. Insert the sodium lamp in the turret and plug it in.

8.2.2. Enter the **turret lamp number** on the keyboard.

8.2.3. Enter the recommended **lamp milliamps** (mA).

8.2.4. Enter the **lamp slit width** using the **HIGH SLIT** key for flame AA.

8.2.5. Enter the **lamp wavelength** using the **LAMBDA PEAK** key.

8.2.6. For **signal keys**, enter the **CONTINUOUS** key for setup.

8.2.7. Press the **RECORD ABSORBANCE** key.

8.2.8. Set the **MODE** key to **ABSORBANCE**.

8.2.9. If the wavelength is >300 nm, use the **AA-MODE** key.

8.2.10. If the wavelength is <300 nm, use the **AA-BG MODE** key.

8.2.11. Press the **SETUP** key and adjust the lamp for maximum absorbance.

8.2.11.1. If the absorbance is >80, press the **GAIN** key and continue the lamp adjustment.

8.2.11.2. When the maximum absorbance is reached, turn the **SETUP** key to **OFF**.

8.2.12. Set the **TIME** key to 0.5 s.

8.2.13. Press the **AZ** (autozero) key. Absorbance should read zero.

8.2.14. Install the 10-cm burner head for air-acetylene analysis and the 5-cm head for nitrous oxide-acetylene.

8.2.15. Adjust the burner head height.

8.2.16. Set oxidant and acetylene flow from Table 8.2 in PE *Analytical Methods for AAS*. (source material 12.1).

8.2.17. Shut the burner shield door and light the flame using the flame **ON/OFF** key on the burner assembly.

8.2.18. Aspirate double-deionized water while the flame is lit.

8.2.19. Aspirate the standard and adjust the instrument for maximum absorbance.

8.3. Running samples.

8.3.1. Enter S1, S2, and S3 as directed for standards in *Analytical Methods for AAS*.

8.3.2. Reset **TIME** key to 3 to 6 s.

8.3.3. Press the signal **HOLD** key.

8.3.4. Select **AVERAGE** key if desired.

8.3.5. Aspirate the known standard and press the **READ** key.

8.3.6. Calculate the characteristic concentration (cc). The result should be within ±20% of the value in *Analytical Methods for AAS*.

8.3.7. Aspirate the calibration-curve standards and read the absorbance.

8.3.8. Switch the **MODE** key to **CONC** (concentration).

8.3.9. Aspirate the standards to set concentration keys as needed.

8.3.10. Read samples and QCs (blind and known).

8.3.11. Recalibrate the instrument with standards every 8 to 12 readings.

8.3.12. When finished, switch the flame **ON/OFF** key to **OFF**. Press the **CHECK FLOW** key on the auto burner control twice to relieve line pressure.

8.3.13. Turn the **POWER** switch on the automatic burner control to **OFF**.

8.3.14. Switch the PE 5000 to **STANDBY** mode.

9. Emergency Shutdown Procedure

9.1. In case of power failure, turn the **POWER** switch on the PE 5000 to **OFF**.

9.2. Turn the gas valves **OFF**.

9.3. Follow procedures for building power failure.

10. Calculations

10.1. Characteristic concentration (cc).

$$cc = \frac{C \times 0.0044}{A_s},$$

where cc = characteristic concentration for flame AA,
C = concentration of standard,
0.0044 = 1% absorbance, and
A_s = absorbance of standard.

11. Proper Waste Disposal Practices

11.1. Solid Waste

11.1.1. Solid waste contaminated with hazardous chemicals above the level of concern is not generated during the routine preparation of QC samples for analysis for inorganic contaminants.

11.1.2. If a solid waste is generated that may be contaminated at a level of concern, the appropriate paperwork is completed on a case-by-case basis.

11.1.2.1. A Waste Profile Request Form (WPRF) describing the solid waste is completed and sent to the Waste Management Group for review.

11.1.2.2. If the Waste Management Group determines that the solid waste is contaminated below the level of concern, the waste is disposed of as ordinary laboratory trash.

11.1.2.3. If the Waste Management Group determines that the solid waste is contaminated above the level of concern, pickup of the contaminated waste is requested as described in Sec. 9.3.

11.2. Liquid Waste

11.2.1. Liquid waste containing hazardous contaminants, such as solutions of trace metals, is accumulated in a coated glass jar in a secondary containment tray and is kept segregated from liquid waste contaminated with organic or radioactive substances or cyanide.

11.2.2. The bottle is labeled with a hazardous waste label and a label indicating its use for trace-metal waste.

11.2.3. The bottle is opened only for the period of time necessary to add waste to it.

11.2.4. When the bottle is full, it is capped and kept in the secondary containment tray pending pickup by the Waste Management Group.

11.2.5. A new bottle is labeled for further use.

11.3. Waste Pickup

11.3.1. Pickup by the Waste Management Group of solid waste or a full bottle of liquid waste containing trace metals is requested using the current Chemical Waste Disposal Request Form (CWDR). The current Waste

Profile Request Form (WPRF) that describes the waste is referenced on the CWDR.

11.3.2. The Waste Management Group picks up the waste for disposal in accord with Laboratory policy.

12. Source Materials

12.1. Perkin-Elmer Corp., *Analytical Methods for Atomic Absorption Spectroscopy* (Norwalk, CT, 1976).

12.2. Perkin-Elmer Corp., *Instructions: Zeeman/5000 System* (Norwalk, CT, 1982).

12.3. U.S. Environmental Protection Agency, "Methods for Chemical Analysis of Water and Wastes," EPA-600/4-79-020 (rev. March 1983).

12.4. U.S. Environmental Protection Agency, "Test Methods for Evaluation of Solid Waste: Laboratory Manual of Physical and Chemical Methods," SW-846 (Nov. 1986).

12.5. "Chemical, Hazardous, and Mixed Waste," Administrative Requirement 10-3, Chapter 1 in Los Alamos National Laboratory *Environment, Safety, and Health Manual* (most recent edition).

THALLIUM ON FILTERS — GRAPHITE FURNACE AA

Analyte: Thallium	**Method No.:** EI200
Matrix: Filters	**Detection Limit:** 5.0 μg/L
Procedure: Graphite furnace atomic absorption	**Accuracy and Precision:** 100% ± 1.0% RSD
Effective Date: 09/30/91	**Authors:** Michael G. Bell Barbara J. Hemberger

SAFETY NOTE: Before beginning this procedure, read all of the Material Safety Data Sheets for the chemicals listed in Sec. 6. Read Sec. 4.3 of the EM-9 Safety Manual for information on personal protective clothing and equipment.

1. Principle of Method

1.1. Thallium in solution may be readily determined by graphite furnace atomic absorption spectroscopy. The method is applicable to Tl on filters. Samples are acid-leached or prepared by total digestion with concentrated nitric acid.

2. Accuracy and Precision

2.1. The determination of thallium in 6 in-house quality control samples (84.6 μg/L) over an 8-month period had a mean of 84.3 μg/L and a relative standard deviation (RSD) of 1.0%.

3. Collection and Storage of Samples.

3.1. There are no special requirements for filters sealed in their containers.

4. Interferences

4.1. Contamination is of prime concern during sample preparation. Periodically clean the work area, including the bench top, to eliminate environmental contamination. Use acid-washed sample cups in the autosampler.

4.2. Chemical interferences can be controlled by the addition of a matrix modifier to all samples and standards. Refer to Perkin-Elmer chart 0993-8199 Rev. D (11/89), or to the PE Methods of Analysis for AAS for the appropriate matrix modifier.

4.3. Silica from the glassware will grow into the sample solution during and following sample processing. To control this problem, use sterile disposable 50-mL polypropylene centrifuge or 15-mL polypropylene tubes in the sample digestion steps.

5. Apparatus

5.1. Polypropylene tubes: 15- and 50-mL, sterile polypropylene, with caps.

5.2. Rainin pipettes with disposable tips.

5.3. Wash bottles: 125-mL, polypropylene, screw tops.

5.4. An automatic sample shaker.

5.5. Perkin-Elmer 5000 atomic absorption instrument: equipped with a Zeeman Graphite Furnace or equivalent.

5.6. Required gas for the above instrument is ultrapure argon.

5.7. Hot plate with aluminum heating block drilled to hold centrifuge tubes.

6. Reagents

6.1. Nitric acid (low-temperature redistilled acid, LTRD).

6.2. Double-deionized water.

6.3. ASTM Type I water (>10 MΩ/cm resistivity, <0.1 μmho/cm conductivity).

6.4. Appropriate matrix modifier for all samples, standards, and QCs.

6.5. Secondary standards for making the appropriate standard curves.

7. Sample Preparation Procedure

7.1. Place filters in 15-mL polypropylene tubes and add 10 mL of 1% nitric acid, LTRD or Ultrex grade, and put caps on securely.

7.1.1. Samples should include a blind QC, customer blank filter, and an extraction blank.

7.1.2. Put samples on the shaker for a minimum of 4 h for extraction.

7.1.3. Add the sample and standards to acid-cleaned sample cups.

7.1.4. For total digestion, place the sample filter in a 50-mL centrifuge tube and add 10 mL of concentrated nitric acid. Heat in an aluminum block to near dryness.

8. Instrument Procedure

8.1. Instrument power and gases check.

8.1.1. Turn the **POWER SWITCH** to the PE5000 Atomic Absorption (AA) to **ON**.

8.1.2. Turn **ON** the argon supply valve after checking the pressure at the tank. Pressure must be over 100 psi or the tank must be changed.

8.1.3. Turn the AA switch from **STANDBY** mode to **RUN**.

8.1.4. Make sure the exhaust hood over the graphite furnace is functioning.

8.2. Instrument setup.

8.2.1. Insert the thallium lamp into the turret oriented toward the ETVAA and plug it in.

8.2.2. Enter **turret lamp number** into keyboard.

8.2.3. Enter recommended **lamp milliamps** (mA) or **watts** depending on lamp type (EDL/HCL).

8.2.3.1. Warm up the EDL and/or HCL lamp for a minimum of 20 min.

8.2.4. Enter **lamp slit width** using **LOW SLIT** key for ETVAA.

8.2.5. Enter **lamp wavelength** using **LAMBDA PEAK** key.

8.2.6. Turn AA switch inside lamp housing to **ICP/ZAA** position.

8.3. Keyboard setup.

8.3.1. Set **SIGNAL** key to **PK AREA** (peak area).

8.3.2. Turn **REC ABS** (record absorbance) signal key **ON**.

8.3.3. Enter **AVG** (average) number (if used).

8.3.4. Enter **CONC MODE** (concentration).

8.4. Furnace setup.

8.4.1. Press **ZAA** key.

8.4.2. Turn **ACCESSORY** knob to **ON** position.

8.4.3. Turn chiller **ON** and check that the water level is above the coils.

8.4.4. Check that the water bottle for distilled water rinse on the autosampler is full.

8.4.5. Turn **ON** the HGA-500 programmer.

8.4.5.1. Enter the temperature program for the element from the ETVAA procedure manual and store the procedure number.

8.5. Computer setup.

8.5.1. Turn PE AA Data System 10 computer **master switch** to **ON**.

8.5.2. Setup ID/WT file.

8.5.3. Turn **print button** on PE5000 keyboard **ON** and store the program.

8.6. Set up autosampler.

8.6.1. Recalibrate the standard curve every 8 to 12 samples.

8.6.2. Enter the number of standards (# stds).

8.6.3. Enter the last sample number (last samp).

8.6.4. Enter the sample volume (samp vol).

8.6.5. Enter the alternate volume (alt vol) for the matrix modifier if used.

8.6.6. Enter the instrument program number (inst prog).

8.6.7. Enter the HGA program number (HGA prog).

8.7. Graphite furnace setup.

8.7.1. Open the furnace and clean or replace the graphite tube. Use the tube with or without the platform depending on the element.

8.7.2. If inserting a new tube, condition it with the manual temperature key.

8.7.3. Using the alignment tool, reinsert the graphite tube and close the furnace.

8.7.4. Using the manual temperature key, set the pyrometer to the atomization temperature of the element and balance the lights (red/green) using the calibration (CAL) knob.

8.7.5. Place the AS40 in **STANDBY** mode and align the autosampler arm. Check the depth of the sample delivery inside the tube and inside the samples. Exit **STANDBY** mode.

8.7.6. Remove and check the furnace lenses. Reinsert the lenses and check the absorbance. If the absorbance reads above 0.100, clean the lenses.

8.7.7. Put samples and standards into the autosampler tray and cover with the dust cover to prevent contamination.

8.7.8. Put the matrix modifier in the holder position, if required.

8.7.9. Check the blank and standards manually.

8.7.10. Calculate the characteristic concentration (cc). If it is within ±20% of chart value (0993-8199 Rev. D 11/89) start the run.

8.7.11. Enter **collect data** mode on PE Data System 10 computer and follow instructions.

8.7.12. After run is complete, press to **DISK** key on PE Data System 10 **twice**.

8.7.13. Select **report** mode on the computer, follow instructions, and print out the final report.

8.7.14. When finished, shut off the chiller, argon gas supply, lamps, EDL power supply, and computer.

8.7.15. Place the autosampler, HGA Programmer, and PE5000 in standby mode.

9. Emergency Shutdown Procedure

9.1. In case of power failure, turn **POWER SWITCH** on PE5000 AA to **OFF**.

9.2. Turn **off** the **gas valves**.

9.3. Follow building power failure procedures.

10. Calculations

10.1. Characteristic concentration (cc).

$$cc = \frac{C \times V \times 0.0044}{A_s},$$

where cc = characteristic concentration for ETVAA,
C = concentration of standard (μg/L),
V = sample aliquot (μL),
A_s = absorbance of standard, and
0.0044 = 1% absorbance.

11. Source Material

11.1. *Analytical Methods for Atomic Absorption Spectrophotometry*, (Perkin-Elmer, Norwalk, Conn., 1976).

11.2. *Instructions: Zeeman/5000 System*, (Perkin-Elmer, Norwalk, Conn., 1982).

11.3. Methods for Chemical Analysis of Water and Wastes, EPA-600/4-79-020 U.S. Environmental Protection Agency (rev. March 1983).

11.4. Perkin-Elmer chart 0993-8199 Rev. D (11/89).

THALLIUM IN WATER AND SOIL EXTRACTS — GRAPHITE FURNACE AA

Analyte: Thallium	**Method No.:** EI205
Matrix: Water, waste water, and soil extracts	**Detection Limit:** 5.0 μg/L
Procedure: Graphite furnace atomic absorption	**Accuracy and Precision:** 100% ± 1.0% RSD
Effective Date: 09/30/91	**Authors:** Michael G. Bell Barbara J. Hemberger

SAFETY NOTE: Before beginning this procedure, read all of the Material Safety Data Sheets for the chemicals listed in Sec. 6. Read Sec. 4.3 of the EM-9 Safety Manual for information on personal protective clothing and equipment.

1. Principle of Method

1.1. This procedure is based on Environmental Protection Agency (EPA) method 279.2 and SW846 method 7841.

1.2. Thallium in solution may be readily determined by graphite furnace atomic absorption spectroscopy. The method is applicable to Tl in drinking, surface, and saline waters and in domestic and industrial wastes.

1.3. Drinking water free of particulate matter may be analyzed directly. Ground water, other aqueous samples, TCLP extracts, industrial wastes, soils, sludges, sediments, and other solid wastes require digestion before analysis.

2. Accuracy and Precision

2.1. The determination of thallium in 6 in-house quality control samples (84.6 μg/L) over an 8-month period had a mean of 84.3 μg/L and a relative standard deviation (RSD) of 1.0%.

3. Collection and Storage of Samples.

3.1. Preserve samples with nitric acid (HNO_3) at a pH <2.0. Complete analysis within 6 months.

4. Interferences

4.1. Contamination is of prime concern during sample preparation. Periodically clean the work area, including the bench top, to eliminate environmental contamination. Use acid-washed sample cups in the autosampler.

4.2. Chemical interferences can be controlled by the addition of a matrix modifier to all samples and standards. Refer to Perkin-Elmer chart 0993-8199 Rev. D (11/89), or to the PE Methods of Analysis for AAS for the appropriate matrix modifier.

4.3. Silica from the glassware will grow into the sample solution during and following sample processing. To control this problem, use sterile disposable 50-mL polypropylene centrifuge tubes in the sample digestion steps.

5. Apparatus

5.1. Centrifuge tubes: 50-mL, sterile polypropylene.

5.2. Rainin pipettes with disposable tips.

5.3. Wash bottles: 125-mL, polypropylene, screw tops.

5.4. Hot plate: with aluminum heating block drilled to hold centrifuge tubes.

5.5. Perkin-Elmer 5000 atomic absorption instrument: equipped with a Zeeman graphite furnace or equivalent.

5.6. Required gas for the above instrument is ultrapure argon.

6. Reagents

6.1. Nitric acid (low-temperature redistilled acid, LTRD).

6.2. Hydrochloric acid (low-temperature redistilled acid, LTRD).

6.3. Double-deionized water.

6.4. ASTM Type I water (>10 MΩ/cm resistivity, <0.1 μhmo/cm conductivity).

6.5. Appropriate matrix modifier for all samples, standards, and QCs.

6.6. Secondary standards for making the appropriate standard curves.

7. Sample Preparation Procedure

7.1. To determine total recoverable elements in water, waste water, and soil extracts, take a 50-mL aliquot from an acid-preserved sample containing not more than 0.25% (wt/vol) total solids. Place the aliquot in a 50-mL disposable sterile polypropylene centrifuge tube.

7.1.1. Add 500 μL of LTRD HNO_3 and 250 μL of Ultrex or LTRD HCl to each sample.

7.1.2. Heat on a hot plate without boiling (approximately 85°C) until the volume is reduced to 5-10 mL.

7.1.3. Loosely cover the tube with the cap and reflux for 30 min.

7.1.4. Allow the sample to cool, and dilute to 50 mL with ASTM Type I water.

7.1.5. Run one digested blank and one digested spike for each digested batch.

7.1.6. Run a duplicate and a spike for 10-20% of the samples.

7.1.7. For TCLP samples, run a spike for every sample and 20% duplicates.

7.1.8. The analysis should be performed before the EPA regulatory holding times expire.

7.1.9. Add sample and standards to acid-cleaned sample cups.

8. Instrument Procedure

8.1. Instrument power and gases check.

8.1.1. Turn the **POWER SWITCH** to the PE5000 Atomic Absorption (AA) to **ON**.

8.1.2. Turn **ON** the argon supply valve after checking the pressure at the tank. Pressure must be over 100 psi or the tank must be changed.

8.1.3. Turn the AA switch from **STANDBY** mode to **RUN**.

8.1.4. Make sure the exhaust hood over the graphite furnace is functioning.

8.2. Instrument setup.

8.2.1. Insert the thallium lamp into the turret oriented toward the ETVAA and plug it in.

8.2.2. Enter **turret lamp number** into keyboard.

8.2.3. Enter recommended **lamp milliamps** (mA) or **watts** depending on lamp type (EDL/HCL).

8.2.3.1. Warm up the EDL and/or HCL lamp for a minimum of 20 min.

8.2.4. Enter **lamp slit width** using **LOW SLIT** key for ETVAA.

8.2.5. Enter **lamp wavelength** using **LAMBDA PEAK** key.

8.2.6. Turn AA switch inside lamp housing to **ICP/ZAA** position.

8.3. Keyboard setup.

8.3.1. Set **SIGNAL** key to **PK AREA** (peak area).

8.3.2. Turn **REC ABS** (record absorbance) signal key **ON**.

8.3.3. Enter **AVG** (average) number (if used).

8.3.4. Enter **CONC MODE** (concentration).

8.4. Furnace setup.

8.4.1. Press **ZAA** key.

8.4.2. Turn **ACCESSORY** knob to **ON** position.

8.4.3. Turn chiller **ON** and check that the water level is above the coils.

8.4.4. Check that the water bottle for distilled water rinse on the autosampler is full.

8.4.5. Turn **ON** the HGA-500 programmer.

8.4.5.1. Enter the temperature program for the element from the ETVAA procedure manual and store the procedure number.

8.5. Computer setup.

8.5.1. Turn PE AA Data System 10 computer **master switch** to **ON**.

8.5.2. Set up ID/WT file.

8.5.3. Turn **print button** on PE5000 keyboard **ON** and store the program.

8.6. Set up autosampler.

8.6.1. Recalibrate the standard curve every 8 to 12 samples.

8.6.2. Enter the number of standards (# stds).

8.6.3. Enter the last sample number (last samp).

8.6.4. Enter the sample volume (samp vol).

8.6.5. Enter the alternate volume (alt vol) for the matrix modifier if used.

8.6.6. Enter the instrument program number (inst prog).

8.6.7. Enter the HGA program number (HGA prog).

8.7. Graphite furnace setup.

8.7.1. Open the furnace and clean or replace the graphite tube. Use the tube with or without the platform depending on the element.

8.7.2. If inserting a new tube, condition it with the manual temperature key.

8.7.3. Using the alignment tool, reinsert the graphite tube and close the furnace.

8.7.4. Using the manual temperature key, set the pyrometer to the atomization temperature of the element and balance the lights (red/green) using the calibration (CAL) knob.

8.7.5. Place the AS40 in **STANDBY** mode and align the autosampler arm. Check the depth of the sample delivery inside the tube and inside the samples. Exit **STANDBY** mode.

8.7.6. Remove and check the furnace lenses. Reinsert the lenses and check the absorbance. If the absorbance reads above 0.100, clean the lenses.

8.7.7. Put samples and standards into the autosampler tray and cover with the dust cover to prevent contamination.

8.7.8. Put the matrix modifier in the holder position, if required.

8.7.9. Check the blank and standards manually.

8.7.10. Calculate the characteristic concentration (cc). If it is within ±20% of chart value (0993-8199 Rev. D 11/89) start the run.

8.7.11. Enter **collect data** mode on PE Data System 10 computer and follow instructions.

8.7.12. After run is complete, press to **DISK** key on PE Data System 10 **twice**.

8.7.13. Select **report** mode on the computer, follow instructions, and print out the final report.

8.7.14. When finished, shut off chiller, argon gas supply, lamps, EDL power supply, and computer.

8.7.15. Place the autosampler, HGA Programmer, and PE5000 in standby mode.

9. Emergency Shutdown Procedure

9.1. In case of power failure, turn **POWER SWITCH** on PE5000 AA to **OFF**.

9.2. Turn **off** the **gas valves**.

9.3. Follow building power failure procedures.

10. Calculations

10.1. Characteristic concentration (cc).

$$cc = \frac{C \times V \times 0.0044}{A_s},$$

where cc = characteristic concentration for ETVAA,
C = concentration of standard (μg/L),
V = sample aliquot (μL),
A_s = absorbance of standard, and
0.0044 = 1% absorbance.

11. Source Material

11.1. *Analytical Methods for Atomic Absorption Spectrophotometry*, (Perkin-Elmer, Norwalk, Conn., 1976).

11.2. *Instructions: Zeeman/5000 System*, (Perkin-Elmer, Norwalk, Conn., 1982).

11.3. Methods for Chemical Analysis of Water and Wastes, EPA-600/4-79-020 U.S. Environmental Protection Agency, (rev. March 1983).

11.4. Perkin-Elmer chart 0993-8199 Rev. D (11/89).

11.5. "Test Methods for Evaluation of Solid Waste: Laboratory Manual of Physical and Chemical Methods," EPA report no. SW-846.

ZINC IN WATER AND SOIL EXTRACTS — FLAME AA

Analyte: Zinc	**Method No.:** EI210
Matrix: Water, waste water, and soil extracts	**Detection Limit:** 5.0 μg/L
Procedure: Flame atomic absorption	**Accuracy and Precision:** 100% ± 4.0% RSD
Effective Date: 09/23/91	**Authors:** Michael G. Bell Barbara J. Hemberger

SAFETY NOTE: Before beginning this procedure, read all of the Material Safety Data Sheets for the chemicals listed in Sec. 6. Read Sec. 4.3 of the EM-9 Safety Manual for information on personal protective clothing and equipment. Read Sec. 11 of this procedure and Source Material 12.5 for proper waste disposal practices.

1. Principle of Method

1.1. This procedure is based on Environmental Protection Agency (EPA) method 289.1 and SW-846 method 7950.

1.2. Zinc in solution may be readily determined by atomic absorption spectroscopy. The method is simple and rapid and is applicable to Zn in drinking, surface, and saline waters and in domestic and industrial wastes.

1.3. Drinking water free of particulate matter may be analyzed directly. Ground water, other aqueous samples, TCLP extracts, industrial wastes, soils, sludges, sediments, and other solid wastes require digestion before analysis.

2. Accuracy and Precision

2.1. The determination of zinc in nine in-house quality control samples (66 μg/L) over a nine-month period had a mean of 67.2 μg/L and a relative standard deviation (RSD) of 4.0%.

3. Collection and Storage of Samples

3.1. Preserve samples with nitric acid (HNO_3) at a pH <2.0. Complete analysis within six months.

4. Interferences

4.1. Contamination is of prime concern during sample preparation. The work area, including the bench top, should be periodically cleaned to eliminate environmental contamination.

4.2. Chemical interferences are matrix dependent.

4.3. Silica from the glassware will grow into the sample solution during and following sample processing. Use sterile disposable 50-mL polypropylene centrifuge tubes in the sample digestion steps to control this problem.

5. Apparatus

5.1. Centrifuge tubes: 50-mL, sterile polypropylene.

5.2. Rainin pipettes with disposable tips.

5.3. Wash bottles: 125-mL, polypropylene, screw tops.

5.4. Hot plate: with aluminum heating block drilled to hold centrifuge tubes.

5.5. Perkin-Elmer 5000 atomic absorption spectrometer or equivalent.

5.6. Gases for the above instrument: air, acetylene, nitrous oxide, argon.

6. Reagents

6.1. Nitric acid (low-temperature redistilled acid, LTRD).

6.2. Hydrochloric acid (low-temperature redistilled acid, LTRD).

6.3. Double-deionized water.

6.4. ASTM Type I water (>10 MΩ/cm resistivity, <0.1 μmho/cm conductivity).

7. Sample Preparation Procedure

7.1. To determine total recoverable elements in water or waste water, take a 50-mL aliquot from an acid-preserved sample containing not more than 0.25% (wt/vol) total solids. Place the aliquot in a sterile disposable 50-mL polypropylene centrifuge tube.

7.1.1. Add 500 μL of LTRD HNO_3 and 250 μL of Ultrex or LTRD HCl to each sample.

7.1.2. Heat on a hot plate without boiling (approximately 85°C) until the final volume is reduced to 5-10 mL.

7.1.3. Loosely cover the tube with the cap and reflux for 30 min.

7.1.4. Allow the sample to cool and dilute to 50 mL with ASTM Type I water.

7.1.5. Run one digested blank and one digested spike with each digested batch.

7.1.6. Run a duplicate and a spike for 10-20% of the samples.

7.1.7. For TCLP samples, run a spike for every sample and run 20% duplicates.

8. Instrument Procedure

8.1. Power instrument and check gases.

8.1.1. Turn the **POWER** switch on the Perkin-Elmer (PE) 5000 atomic absorption (AA) spectrometer to **ON**.

8.1.2. Turn the **POWER** switch on the PE 5000 automatic burner control to **ON**.

8.1.3. Turn the **AIR SUPPLY** valve **ON**.

8.1.4. Check the pressure in the acetylene tank; if it is <100 psi, change the tank. Turn the **ACETYLENE SUPPLY** valve **ON**.

8.1.5. Turn the **NITROUS OXIDE SUPPLY** valve **ON**, if necessary.

8.1.6. Turn the AA switch from **STANDBY** mode to **RUN**.

8.1.7. Make sure the exhaust hood is functioning.

8.1.8. Make sure the fluids in the drain vessel and drain loop are at their proper levels.

8.2. Instrument setup.

8.2.1. Insert the zinc lamp in the turret and plug it in.

8.2.2. Enter the **turret lamp number** on the keyboard.

8.2.3. Enter the recommended **lamp milliamps** (mA).

8.2.4. Enter the **lamp slit width** using the **HIGH SLIT** key for flame AA.

8.2.5. Enter the **lamp wavelength** using the **LAMBDA PEAK** key.

8.2.6. For **signal keys**, enter the **CONTINUOUS** key for setup.

8.2.7. Press the **RECORD ABSORBANCE** key.

8.2.8. Set the **MODE** key to **ABSORBANCE.**

8.2.9. If the wavelength is >300 nm, use the **AA-MODE** key.

8.2.10. If the wavelength is <300 nm, use the **AA-BG MODE** key.

8.2.11. Press the **SETUP** key and adjust the lamp for maximum absorbance.

8.2.11.1. If the absorbance is >80, press the **GAIN** key and continue the lamp adjustment.

8.2.11.2. When the maximum absorbance is reached, turn the **SETUP** key to **OFF.**

8.2.12. Set the **TIME** key to 0.5 s.

8.2.13. Press the **AZ** (autozero) key. Absorbance should read zero.

8.2.14. Install the 10-cm burner head for air-acetylene analysis and the 5-cm head for nitrous oxide-acetylene.

8.2.15. Adjust the burner head height.

8.2.16. Set oxidant and acetylene flow from Table 8.2 in PE *Analytical Methods for AAS.* (source material 12.1).

8.2.17. Shut the burner shield door and light the flame using the flame **ON/OFF** key on the burner assembly.

8.2.18. Aspirate double-deionized water while the flame is lit.

8.2.19. Aspirate the standard and adjust the instrument for maximum absorbance.

8.3. Running samples.

8.3.1. Enter S1, S2, and S3 as directed for standards in *Analytical Methods for AAS.*

8.3.2. Reset **TIME** key to 3 to 6 s.

8.3.3. Press the signal **HOLD** key.

8.3.4. Select **AVERAGE** key if desired.

8.3.5. Aspirate the known standard and press the **READ** key.

8.3.6. Calculate the characteristic concentration (cc). The result should be within ±20% of the value in *Analytical Methods for AAS*.

8.3.7. Aspirate the calibration-curve standards and read the absorbance.

8.3.8. Switch the **MODE** key to **CONC** (concentration).

8.3.9. Aspirate the standards to set concentration keys as needed.

8.3.10. Read samples and QCs (blind and known).

8.3.11. Recalibrate the instrument with standards every 8 to 12 readings.

8.3.12. When finished, switch the flame **ON/OFF** key to **OFF**. Press the **CHECK FLOW** key on the auto burner control twice to relieve line pressure.

8.3.13. Turn the **POWER** switch on the automatic burner control to **OFF**.

8.3.14. Switch the PE 5000 to **STANDBY** mode.

9. Emergency Shutdown Procedure

9.1. In case of power failure, turn the **POWER** switch on the PE 5000 to **OFF**.

9.2. Turn the gas valves **OFF**.

9.3. Follow procedures for building power failure.

10. Calculations

10.1. Characteristic concentration (cc).

$$cc = \frac{C \times 0.0044}{A_s},$$

where cc = characteristic concentration for flame AA,
C = concentration of standard,
0.0044 = 1% absorbance, and
A_s = absorbance of standard.

11. Proper Waste Disposal Practices

11.1. Solid Waste

11.1.1. Solid waste contaminated with hazardous chemicals above the level of concern is not generated during the routine preparation of QC samples for analysis for inorganic contaminants.

11.1.2. If a solid waste is generated that may be contaminated at a level of concern, the appropriate paperwork is completed on a case-by-case basis.

11.1.2.1. A Waste Profile Request Form (WPRF) describing the solid waste is completed and sent to the Waste Management Group for review.

11.1.2.2. If the Waste Management Group determines that the solid waste is contaminated below the level of concern, the waste is disposed of as ordinary laboratory trash.

11.1.2.3. If the Waste Management Group determines that the solid waste is contaminated above the level of concern, pickup of the contaminated waste is requested as described in Sec. 9.3.

11.2. Liquid Waste

11.2.1. Liquid waste containing hazardous contaminants, such as solutions of trace metals, is accumulated in a coated glass jar in a secondary containment tray and is kept segregated from liquid waste contaminated with organic or radioactive substances or cyanide.

11.2.2. The bottle is labeled with a hazardous waste label and a label indicating its use for trace-metal waste.

11.2.3. The bottle is opened only for the period of time necessary to add waste to it.

11.2.4. When the bottle is full, it is capped and kept in the secondary containment tray pending pickup by the Waste Management Group.

11.2.5. A new bottle is labeled for further use.

11.3. Waste Pickup

11.3.1. Pickup by the Waste Management Group of solid waste or a full bottle of liquid waste containing trace metals is requested using the current Chemical Waste Disposal Request Form (CWDR). The current Waste

Profile Request Form (WPRF) that describes the waste is referenced on the CWDR.

11.3.2. The Waste Management Group picks up the waste for disposal in accord with Laboratory policy.

12. Source Materials

12.1. Perkin-Elmer Corp., *Analytical Methods for Atomic Absorption Spectroscopy* (Norwalk, CT, 1976).

12.2. Perkin-Elmer Corp., *Instructions: Zeeman/5000 System* (Norwalk, CT, 1982).

12.3. U.S. Environmental Protection Agency, "Methods for Chemical Analysis of Water and Wastes," EPA-600/4-79-020 (rev. March 1983).

12.4. U.S. Environmental Protection Agency, "Test Methods for Evaluation of Solid Waste: Laboratory Manual of Physical and Chemical Methods," SW-846 (Nov. 1986).

12.5. "Chemical, Hazardous, and Mixed Waste," Administrative Requirement 10-3, Chapter 1 in Los Alamos National Laboratory *Environment, Safety, and Health Manual* (most recent edition).

BARIUM IN SOILS – ACID DIGESTION AND ICPAES

Analyte: Barium	**Method No.:** EI300
Matrix: Soils	**Detection Limits:** See Section 2.
Procedure: Inductively coupled plasma atomic emission spectroscopy (ICPAES) Model ARL 3520	**Accuracy and Precision:** See Section 3.1.
	Linear Working Range: See Section 2.
Effective Date: 01/03/89 to 10/01/91	**Author:** Janet D. Morgan

SAFETY NOTE: Before beginning this procedure, read all of the Material Safety Data Sheets for the chemicals listed in Sec. 7. Read Sec. 4.3 of the EM-9 Safety Manual for information on personal protective clothing and equipment.

1. Principle of Method

1.1. A representative 0.25-g sample is digested in hydrofluoric (HF) and nitric acids.

2. Limits of Detection and Linear Working Range

2.1. The following table lists 2 σ limits of detection and linear working range concentrations (LWRC). Detection limits, sensitivity, and LWRC of the metals will vary with the matrices and model of spectrometer.

Analyte	Limit of Detection (μg/g)	LWRC (μg/g)
Ba	0.2	16.0-1600

3. Accuracy and Precision

3.1. Accuracy and precision have not been tabulated.

Determination of Barium								
Sample 1			Sample 2			Sample 3		
00.00549			00.00596			00.00576		
TV	MRV	RSD	TV	MRV	RSD	TV	MRV	RSD
414	400.5	6.4	966	1077	6.8	409	393	5.4

TV = True value.
MRV = Mean reported value.
RSD = Relative standard deviation.

4. Interferences

4.1. Soils can contain diverse matrix types, each of which may present its own analytical challenge. Spiked samples and any relevant standard reference materials should be processed to aid in determining interferences along with performing analytical scans and using "λ", a table of ICP lines and potential interferences.

4.2. The high amounts of sulfur present in most soil samples will form barium sulfate, resulting in low Ba recoveries. For this reason, hydrofluoric acid is required in this procedure.

4.3. Particulates in the digestate that may clog the nebulizer should be removed by filtration.

4.4. Physical interferences are effects associated with the sample nebulization and transport processes. Changes in viscosity and surface tension can cause significant inaccuracies, especially in samples containing high dissolved solids or high acid concentrations. These interferences can be reduced by diluting the sample and using a peristaltic pump.

4.5. Chemical interferences include molecular compound formation, ionization effects, and solute vaporization effects. Normally, these effects are not significant with the ICP technique. If observed, they can be minimized by careful selection of operating conditions (incident power, observation position, etc.), by acid matrix matching, and by using an internal standard. Chemical interferences are highly dependent on matrix type and the specific analyte.

4.6. Spectral interferences are caused by: (1) overlap of a spectral line from another element, (2) unresolved overlap of molecular band spectra, (3) background contribution from continuous or recombination phenomena, and (4) stray light from the line emission of high-concentration elements.

4.6.1. Spectral overlap can be compensated for by computer-correcting the raw data after monitoring and measuring the interfering element. Unresolved overlap requires selection of an alternate wavelength. Background contribution and stray light can usually be compensated for by a background correction adjacent to the analyte line.

4.6.2. The interference effects must be evaluated for each instrument, because the intensities will vary with operating conditions, power, viewing height, argon flow rate, etc.

5. Collection and Storage of Samples

5.1. All samples must be collected using a sampling plan that addresses the considerations discussed in Chapter Nine of Environmental Protection Agency Laboratory Manual, Volume II, September 1986.

5.2. All sample containers must be prewashed with detergents, acids, and Type II water. Plastic and glass containers are both suitable. See Chapter Three, Section 3.1.3, in the Environmental Protection Agency Laboratory Manual, Volume 1A, November 1986 for further information.

5.3. Nonaqueous samples must be refrigerated upon receipt and analyzed as soon as possible.

6. Apparatus

6.1. Teflon beakers: 250-mL.

6.2. Teflon covers.

6.3. Nalgene filter apparatus with 0.45-μm pore size.

6.4. Hot plate.

6.5. ICPAES. Model ARL 3520.

6.6. Falcon 2059 polypropylene tube with cap, 15-mL.

6.7. Gilson autosampler with carrousel.

6.8. Rabbit peristaltic pump.

6.9. Radio-frequency generator.

7. Reagents

NOTE: All reagents should be analyzed and monitored for impurities.

7.1. ASTM Type II Water.

7.2. Nitric acid (concentrated, low-temperature redistilled, LTRD). If the method blank is less than the method detection limit (<MDL), the acid can be used.

7.3. Hydrofluoric acid (concentrated, Ultrex pure). If the method blank is less than the MDL, the acid can be used.

7.4. Argon gas supply. Welding grade or better.

7.5. Nitric acid (3% vol/vol). Prepare from LTRD and Type II water.

7.6. Reagent blank. Composed of the reagents in the same volume as used in the processing of the samples. The reagent blank must be carried through the complete procedure and contain the same acid concentration in the final solution as the sample solution.

7.7. Standard stock solutions (1000 μg/mL). For the analytes of interest, purchased from a traceable source.

7.8. Two types of quality control (QC) samples are required. One is an aqueous QC used to check the validity of the standard curve and the other, a soil QC, is taken through the digestion to check the validity of the digestion process.

7.9. Spike solution A (125 mg/L Ba standard). Prepare from the standard stock solution.

8. Calibration and Standards

NOTE: Standards are prepared from a stock solution of traceable material.

8.1. Working standards (mg/L) in 3% HNO_3.

Analyte	REFBLK	STD0	STD1	STD2	STD3
Ba	0.0	0.0	0.2	2.0	20.0

9. Procedure

9.1. Sample digestion.

9.1.1. Mix the sample thoroughly to achieve homogeneity. For each digestion procedure, weigh 0.25 g sample to the nearest 0.01 g and transfer to a Teflon beaker. Include a reagent blank and 10% duplicate and spike samples. Add 2 mL of spike solution A to the spike sample, which will be diluted to a final volume of 50 mL and a final concentration of 5 mg/L Ba.

9.1.2. Add 2 mL of HF and mix the slurry. Heat the sample to approximately 95°C and take to near dryness. Allow the sample to cool. Add 5.0 mL of concentrated HNO_3, and take to near dryness.

9.1.3. After the sample has cooled, add approximately 20 mL of 3% HNO_3 and reflux for 30 min. Cool the beaker.

9.1.4. Transfer the sample to a Nalgene filter unit and filter to a final volume of 50 mL.

9.1.5. The diluted sample has an acid concentration of approximately 3% (vol/vol) HNO_3 and is ready for analysis.

9.2. Instrument operation.

9.2.1. The analyst must be familiar with the ICPAES software in order to operate the instrument. Refer to the instrument manual.

9.2.2. Follow the instructions provided by the instrument's manufacturer.

9.2.3. Allow the instrument to become thermally stable before beginning the calibration (at least 30 min).

9.2.4. Close the optical gate to profile the instrument.

9.2.5. The optical gate will remain open for the rest of the operation.

9.2.6. Using the program procedure **BATOT**, scan any new matrices to determine the necessity and measuring position for background corrections or other interferences.

9.2.7. Set up the autosampler for further analysis.

9.2.8. Data can be captured using Microsoft Excel.

9.2.9. Transfer the standards and samples to Falcon tubes.

9.2.10. Use **CAL** to run all working standards and produce calibration curves for all elements.

9.2.11. Due to the complexity of the matrices, no internal standard is used and duplicates and spikes are employed.

9.2.12. Set up a sequence file with a calibration blank, a high standard, a quality control sample, and 10% duplicate and spike samples. Include a calibration blank and a QC sample at 10% intervals. If dilutions were performed, apply the appropriate factors to the samples at this time.

9.2.13. Concentration values for the standard and QC sample should not deviate from the actual value by more than 10%. If they do, re-calibration may be necessary.

9.2.14. Flush the system with 3% HNO_3 before the analysis of each sample.

9.2.15. If the analyte concentration is greater than the highest standard, reanalyze after making the appropriate dilution.

9.2.16. Transfer data to Microsoft Excel for calculations.

9.2.17. See Table I for instrument log.

10. Calculations

10.1. Perform all reagent blank corrections and percent recovery calculations using EXCEL Window software. Report results in $\mu g/g$.

10.2. The duplicate matrix spike sample recovery should be within ± 20% of the actual value. Calculate percent spike recoveries as follows:

$$\%Rec = \frac{100 \times \left(d3 - \left(\frac{d1 + d2}{2}\right)\right)}{Y},$$

where d1 = value first duplicate (mg/L), no spike,
d2 = value second duplicate (mg/L), no spike,
d3 = value of replicates and spikes (mg/L), and
Y = concentration of spike added (mg/L).

11. Source Materials

11.1. *United States Environmental Protection Agency Test Methods for Evaluating Solid Waste.* Chapter 9, Vol. II Field Manual, 3rd Ed. (Office of Solid Waste and Emergency Response, Washington, DC, 1986).

11.2. *ARL Handbook*, No. AA80770, Vol. 4.1. May 1984.

TABLE I. INSTRUMENT LOG	
Rf Generator Readings	Value
Incident power	1.2 kW
Reflected power	<1 W
Plate current (< 0.65 amp)	0.8 A
P.A. filament voltage (7.1 - 7.9 v)	7.0 V
P.A. voltage (< 4800 v)	3600 V
P.A. grid current (<0.4 amp)	0.16 A
Coolant argon meter reading	28 psi
Plasma argon meter reading	34 psi
Nebulizer argon meter reading	0.44 psi
Nebulizer uptake rate	3 mL/min
Gilson peristaltic pump setting	650
MHDS Nebulizer	

TABLE II. CONDITION TABLE USED "ICPJM"

COND HVPS NAME	FLUSH STAND/ TIME SOURCE	PRE-INT TIME	INTEG TIME	PRE-INT COND	INTEG COND	FATIGUE LAMP	ATTEN-UATORS
ICP4	30	30	3.00000	0	0	00	0000000
1000	11						
ICPSAM	0	20	5.00000	0	0	00	0000000
1000	11						
ICPSJW	0	0	10.0000	0	0	00	0000000
1000	11						
ISCOR	0	5	5.00000	0	0	00	0000000
1000	00						
I	0	0	2.00000	0	0	00	0000000
1000	11						
ICPCON	0	45	2.50000	0	0	00	0000000

TABLE II. CONDITION TABLE USED "ICPJM" (cont)

COND HVPS NAME	FLUSH STAND/ TIME SOURCE	PRE-INT TIME	INTEG TIME	PRE-INT COND	INTEG COND	FATIGUE LAMP	ATTEN-UATORS
1000	11						
ICPJM	30	30	5.00000	0	0	00	0000000
1000	11						
ICP4EL	30	30	5.00000	0	0	00	0000000
1000	11						

ANIONS IN WATER AND WASTE WATER — IC

Analyte: Chloride (Cl^-), nitrate (NO_3^-), sulfate ($SO_4^=$) fluoride (F^-), bromide (Br^-)	**Method No.:** EI400 **Range:** 1-1000 mg/L
Matrix: Water and waste water	**Detection Limit:** Cl^- 0.5 mg/L, NO_3^- 1 mg/L, $SO_4^=$ 1 mg/L, F^- 0.5 mg/L, Br^- 1 mg/L
Procedure: Ion chromatography	**Accuracy and Precision:** Cl^- 96% ± 4% RSD NO_3^- 98% ± 5% RSD, $SO_4^=$ 104% ± 3% RSD
Effective Date: 09/04/90	**Author:** Harry P. Patterson

SAFETY NOTE: Before beginning this procedure, read all of the Material Safety Data Sheets for the chemicals listed in Sec. 5. Read Sec. 4.3 of the EM-9 Safety Manual for information on personal protective clothing and equipment.

1. Principle of Method

1.1. Ions in the aqueous phase are separated by their affinity for the stationary (resin) phase. The affinity is a function of resin type, ion size, ion charge, ion concentration, and matrix composition of the mobile phase.

1.2. The guard column acts as a trap to prevent contamination of the separator column. The separation actually begins on the guard column.

1.3. The mobile phase then passes through a micromembrane suppressor, which is washed with a regenerant to remove the high background of the column eluant.

1.4. The conductivity meter continuously measures the conductivity of the mobile phase after it passes through the suppressor.

1.5. Unknowns are equated with standards of known concentration as a function of time.

2. Accuracy and Precision

2.1. An EPA QC sample 00.01013, with a Cl^- concentration between 44.6 and 57.4 mg/L and a $SO_4^=$ concentration between 16.3 and 23.1 mg/L, was analyzed with prepared standards. The accuracy and precision for Cl^- were 49.8 ± 1.9 mg/L (N = 20) and for $SO_4^=$ were 25.4 ± 0.6 mg/L (N = 18) at the one-sigma level.

2.2. In-house QC sample 00.97686 was used to determine the accuracy and precision for NO_3^-. The in-house value was 1.98 mg/L. The results of 8 analyses averaged 1.9 ± 0.1 mg/L at the one-sigma level.

2.3. Not enough data has been generated to determine the accuracy and precision for F^- and Br^-.

3. Interferences

3.1. Sample ions must be in the same state as the standard. Complex ions will have different retention times than simple ions and may not elute from the column.

3.2. Samples with ionic strengths that differ significantly from the standards may have retention times considerably different from the standard.

3.3. High concentrations of one species in a sample may distort or swamp an adjacent peak.

4. Apparatus

4.1. Dionex 4000i chromatograph: Dionex Corp., 1228 Titan Way, Sunnyvale, CA. 94088-3603.

4.2. Dionex AI-400 data station: equipped with a mouse, Microsoft Windows, and AI-450 Ver. 3.2 software, Dionex Corp., 1228 Titan Way, Sunnyvale, CA. 94088-3603.

4.3. Dionex C.I.M. module: Dionex Corp., 1228 Titan Way, Sunnyvale, CA. 94088-3603.

4.4. Hewlett Packard Think-Jet printer: Holmans, 401 Wyoming Blvd., Albuquerque, NM.

4.5. Autosampler: Dionex Corp., 1228 Titan Way, Sunnyvale, CA. 94088-3603.

4.6. AS4A anion separator column: equipped with AG4A guard column, Dionex Corp., 1228 Titan Way, Sunnyvale, CA. 94088-3603.

4.7. Volumetric flasks: Class A, various sizes.

4.8. Pipettes: Class A, various sizes.

4.9. Filtering apparatus: with Millipore 0.45-μm filter, VWR Scientific, Los Alamos, NM 87545.

4.10. Filtering flask: 250-mL.

4.11. Glass bottles: 1-L, for delivery of column eluants, Dionex Corp., 1228 Titan Way, Sunnyvale, CA. 94088-3603.

4.12. Gas pressure regulator for He cylinder: VWR Scientific, Los Alamos, NM 87545.

4.13. Syringe: 10-cc, plastic, disposable.

4.14. AMMS suppressor: Dionex Corp., 1228 Titan Way, Sunnyvale, CA. 94088-3603.

4.15. Nalgene pressurized bottle: 4-L, for suppressor regenerant with regulator, Dionex Corp., 1228 Titan Way, Sunnyvale, CA. 94088-3603.

4.16. Drying oven: VWR Scientific, Los Alamos, NM 87545.

4.17. Desiccator: VWR Scientific, Los Alamos, NM 87545.

4.18. Analytical balance: VWR Scientific, Los Alamos, NM 87545.

5. Reagents

5.1. Sodium chloride (reagent-grade). VWR Scientific, Los Alamos, NM 87545.

5.2. Potassium nitrate (reagent-grade). VWR Scientific, Los Alamos, NM 87545.

5.3. Sodium sulfate (reagent-grade). VWR Scientific, Los Alamos, NM 87545.

5.4. Sodium bromide (reagent-grade). VWR Scientific, Los Alamos, NM 87545.

5.5. Sodium fluoride (reagent-grade). VWR Scientific, Los Alamos, NM 87545.

5.6. Sulfuric acid (concentrated, reagent-grade). VWR Scientific, Los Alamos, NM 87545.

5.7. Sulfuric acid regenerant solution (0.025 N). Dilute 2.8 mL of concentrated H_2SO_4 in 4 L of double-deionized water.

5.8. Na_2CO_3 (reagent-grade). VWR Scientific, Los Alamos, NM 87545.

5.9. $NaHCO_3$ (reagent-grade). VWR Scientific, Los Alamos, NM 87545.

5.10. Column eluant. Dissolve 0.191 g of Na_2CO_3 and 0.143 g of $NaHCO_3$ in double-deionized water in a 1-L volumetric flask. Dilute to volume and mix well.

5.11. Helium gas. Regulated to deliver 100 psi, VWR Scientific, Los Alamos, NM 87545.

5.12. Double-deionized water.

5.13. Standard stock solutions (1000 ppm). Dry all reagent chemicals overnight at 105°C in a drying oven. Remove and cool in a desiccator before weighing.

5.13.1. Chloride (1000 ppm). Weigh 1.6484 g of dried NaCl, transfer to a 1-L volumetric flask, dilute to volume with double-deionized water, and mix well.

5.13.2. Nitrate (1000 ppm). Weigh 1.6307 g of dried KNO_3, transfer to a 1-L volumetric flask, dilute to volume with double-deionized water, and mix well.

5.13.3. Sulfate (1000 ppm). Weigh 1.4790 g of dried Na_2SO_4, transfer to a 1-L volumetric flask, dilute to volume with double-deionized water, and mix well.

5.13.4. Fluoride (1000 ppm). Weigh 2.2100 g of dried NaF, transfer to a 1-L volumetric flask, dilute to volume with double-deionized water, and mix well.

5.13.5. Bromide (1000 ppm). Weigh 1.2877 g of dried NaBr, transfer to a 1-L volumetric flask, dilute to volume with double-deionized water, and mix well.

6. Calibration and Standards

6.1. Prepare a mixed standard solution containing 3 ppm Cl^-, 10 ppm NO_3^-, 15 ppm $SO_4^=$, 10 ppm Br^-, and 2 ppm F^-. Pipette 3 mL of 1000 ppm Cl^-, 10 mL of 1000 ppm NO_3^-, 15 mL 1000 ppm $SO_4^=$, 10 mL 1000 ppm Br^-, and 2 mL 1000 ppm F^- standard solutions into a 1-L volumetric flask. Dilute to volume with double-deionized water and mix well.

6.2. Spike solutions (100 ppm).

6.2.1. Cl^- (100 ppm). Dilute 100 mL of 1000 ppm chloride solution to 1 L with double-deionized water and mix well.

6.2.2. NO_3^- (100 ppm). Dilute 100 mL of 1000 ppm nitrate solution to 1 L with double-deionized water and mix well.

6.2.3. $SO_4^=$ (100 ppm). Dilute 100 mL of 1000 ppm sulfate solution to 1 L with double-deionized water and mix well.

6.2.4. Br^- (100 ppm). Dilute 100 mL of 1000 ppm bromide solution to 1 L with double-deionized water and mix well.

6.2.5. F^- (100 ppm). Dilute 100 mL of 1000 ppm fluoride solution to 1 L with double-deionized water and mix well.

6.3. EPA QC sample 00.01404 is used to check the accuracy and precision of the method and instrumentation. The following ranges are acceptable: F^- 0.89 to 1.10 mg/L, Cl^- 48.2 to 55.4 mg/L, and $SO_4^=$ 15.3 to 22.5 mg/L. In-house QC sample 00.97686 is used to check NO_3-N and has a value of 1.78 to 2.18 mg/L. In-house QC sample 00.21218 is used to check Br^- and has a value of 18.3 to 22.3 mg/L.

7. Procedure

7.1. Initial setup of DIONEX 4000i.

7.1.1. Fill the reagent reservoir bottle No. 3 with the column eluant.

7.1.2. Fill the reservoir with the AMMS regenerant solution.

7.1.3. Install the AS4A column with AG4A guard in the basic chromatography module. Make sure all fittings are snug and leak-free.

7.1.4. Make sure the AMMS (anion micro membrane suppressor) is installed and lines are snug and leak-free.

7.1.5. Turn on the He gas, which has been regulated at the main tank to deliver 100 psi.

7.1.6. Turn on the He gas to the AMMS reservoir and pressurize the system with the regulator to 10 psi. The flow rate should be close to 5 mL/min at the effluent of the AMMS.

7.1.7. Turn on the He gas to the eluant degas module to degas the reagent eluants. Turn **PRESSURE** switch **ON** and pressurize to 20 psi. Turn **SAMPLE** switch **ON**. Turn **ELUANT NO. 3** to **ON**. Degas in low mode.

7.1.8. Turn the gradient pump module **(GPM)** and the conductivity detector module **(CDM)** to **LOCAL**. Turn the **PUMP** switch to **START**. The program for this setup should be 100% flow on position 3, at a flow rate of 2 mL/min. The **HIGH LIMIT** setting of the pump pressure should be **4000 psi** and the **LOW LIMIT** should be **0**. The normal operating pressure of the system is 1200 psi.

7.1.9. It may be necessary to prime the pump if it does not start. This will be indicated by a grinding noise in the pump or by low or erratic pump pressure. Shut off the pump if this occurs.

7.1.9.1. Prime the pump by inserting a 10-cc plastic syringe at the priming point and open the valve. Draw eluant solution into the syringe at the priming point, filling the syringe. Remove the syringe, invert, and tap to release trapped air bubbles.

7.1.9.2. Reinsert the syringe into the priming point. Open the pressure transducer valve. Turn on the pump. Inject the liquid in the syringe into the system until the syringe is nearly empty. Retighten the pressure transducer valve. Turn off the valve at the priming point.

7.1.9.3. The system should now be primed and the system pressure should stabilize. If it does not stabilize, it may be necessary to prime again until all air is removed from the eluant lines.

7.1.10. Let the system equilibrate under these conditions for 15-30 min until a steady baseline of approximately 10 microsiemens is reached on the conductivity meter.

7.2. Sample preparation.

7.2.1. All unknowns should be filtered through a 0.45-μm filter to remove solids that clog columns and lines.

7.2.2. When running unknown samples, start with dilute samples to prevent overloading of the separator columns. Begin with a 1:100 dilution on unknowns and adjust accordingly. Try to adjust sample peaks to be ± 50% of standard peaks.

7.2.3. Prepare spiked samples to determine the matrix effects on the analytes of concern. Use samples that are low in analytes to prevent overloading the columns. To a 100-mL volumetric flask, add the unknown sample aliquot plus the following aliquots of the 100 ppm spike solutions: 3 mL of Cl^-, 10 mL of NO_3^-, 15 mL of $SO_4^=$, 2 mL of F^-, and 10 mL of Br^-.

Volume of 100-ppm spike solution added to 100-mL flask		Resulting concentration of spike in flask
3 mL	Cl^-	3 mg/L
10 mL	NO_3^-	10 mg/L
15 mL	$SO_4^=$	15 mg/L
2 mL	F^-	2 mg/L
10 mL	Br^-	10 mg/L

7.3. Autosampler setup.

7.3.1. Load standards, QCs, samples, duplicates, and spikes into the 5-mL sample vials. Duplicates, QCs, and spikes should be run every tenth unknown sample.

7.3.2. Fill the tube with solution to the etched line or above. Use only filtered solutions for unknown samples. Insert the cap into the tube with the nipple end up. Press down on the cap with the special tool provided until the cap is flush with the vial. Shake off excess liquid.

7.3.3. Place the sample tube into the 6-position cassette. Load in order, with the first sample nearest the white dot on the cassette.

7.3.4. Load the sample cassettes into the autosampler with the white dot facing the sampling mechanism. The first sample loaded should always be the mixed standard solution, to calibrate the instrument.

7.3.5. The autosampler should be in local mode. Put **RUN-HOLD** in the **RUN** mode and press the **LOAD** button. The cartridge will advance and run through the cycle. Let run until the **STATUS** light shows **READY**. This process takes about 1 min.

7.3.6. Leave the autosampler in local mode. At this time the samples are loaded and ready to start an automated run under computer control.

7.4. Setup of the operating files for running the instrument.

7.4.1. Turn up the brightness and contrast on the CRT.

7.4.2. The first screen should be the **Program Manager**. Using the mouse, double-click on the **AI450 v3.2** block. The Main Menu Config. screen will appear.

7.4.3. Double-click on the **Method** block. The Method Editor screen will appear.

Click on the box called **file**. Move the cursor to **open** and click. Move the cursor to **anion.1 met** and double-click. You will be in the Method Editor screen.

Move the cursor and click on the **System** block. Under System Assignment, the first block reads **ACI SYS1:ANION1**. Click on **OK** to return to the Method Editor screen.

Go to the detectors used by this method and click on the **Detector 1** box. The highlighted box should read **CDM-1 Conductivity Det**. Click on the **OK** box and you will return to the Method Editor screen.

The block marked Plot Scale is a variable parameter. It is set at 30.0 μS and is best left at this setting.

The run time is variable but is normally set at 10.0 min. The sampling rate should be set at 5 Hz.

Under Instrument Control, double-click on the **gradient**. The Gradient Editor screen will appear. Click on the **file** portion and click on **open**. Move the cursor to **anion1.gpm** and double-click. The time box shows 0. These are the initial instrument settings. The flow setting should be 2 mL/min. The eluent setting should be 100% at position 3. V5 and V6 should be in the off position.

Click on the **advance arrow** of the time box. Three time settings will appear 0.0, 0.1, and 1.0 min. With the cursor, click on **0.1 min**. The flow should be 2.0 mL/min. Eluent should be 100% at position 3. V5 should be on and V6 should be off. Click on **1.0 min**. The flow should be 2.0 mL/min and eluent 100% at position three. V5 and V6 should both be off. Click on the **OK** box.

Move the cursor to the uppermost **left hand corner** box and click. Select the **close** box and click. Save current changes by answering **yes**. Click on the **OK** box to save the file. Select **OK** again and the screen will return to the Method Editor screen.

7.4.4. Click on the **timed events** box and the Timed Event screen will appear. Go to the file section and select **open**. Select the **anion1.te** file by double-clicking. This will show the Timed Events Editor screen. Under the file box select the **open** option. Double-click on the **anion1.te** option. Under the step time box, the initial conditions are 30μS. Under the ACI no functions are activated.

Under the step time box click on the **0.0 min**. GPM and CDM-1 are not changed. Under ACI the autosampler should be **on**.

Under the step time box click on **0.1 min**. GPM and CDM-1 settings remain unchanged. ACI setting has autosampler **off**.

Under the step time setting now click on **2.1 min**. Under the GPM box, activate the **start and run** option. Under CDM-1, offset for the cell should be **on**. Under ACI, nothing should be activated.

Under the step time settings click on **2.2 min**. Under the GPM box, activate the **start and run** option. Under CDM-1, offset and cell should be **on**. Under ACI, begin sampling should be **on**.

Under the step time settings click on **10.0 min**. GPM should have **start** and **reset** activated. CDM-1 should have offset and cell boxes **on**. ACI should have no settings selected.

All the above settings are the normal settings for the anion procedure. They can be changed if necessary. When all selections are made, click on the **enter button** to enter the settings into the method file. Go to the uppermost left hand corner file box and select the **save** option. Select the **OK** box. Now all the settings are in the anion1 method file.

Go to the uppermost lefthand corner of the Timed Events editor screen and select the **close** option. This will take you back to the AI-450 Method Editor screen.

7.4.5. Under the data processing box select **Detector 1**. Now the Data Processing parameters screen appears. Click on the **integration box**. The peak detection should be: peak width = 10 s, peak threshold = 0.5, area reject = 1000 area counts. Under reference peak, the area reject should be 1000 and the time window percent should be 10. This is the only setting that is likely to be changed after making the initial selections. Click on the **OK** box.

Click on the **data events** box. There are various options which can be added or deleted as needed. The normal events selected are: at 1.20 min force the baseline, void volume treatment for this peak and start peak detection. Select **exit** and click. This takes you back to the Data Processing parameters screen.

Place the cursor on **Calibration** and click. You should be in the Calibration Parameters screen. The following options should be selected: levels = **1** , fit type = **linear**, calibration update = **replace**, standardization = **external**, peak calibration = **area**, defaults are sample volume = **1**, dilution factor = **1** (can be changed by clicking cursor and

typing in value) and unknown response factor = **0**, cal std volume = **1**, default internal standard standard conconcentration in samples = **1**, sample units = **mg/L**. Click on **OK** to return to Data Processing parameters screen.

Click on **components**. The two components of current interest are Cl and SO_4. The normal retention time for Cl is 1.52 min and for SO_4 is 7.02 min. These parameters can change because of varying column conditions. They can be changed by moving the cursor to the appropriate box and double clicking.

Enter the **new value** at the keyboard. After a new value is typed in, click on the **add** box to enter the new value into the file. Percent window should be left at 10%. Ref. Comp. should be 1. This procedure is not currently being used to determine F, Br or NO_3 but their parameters could be set at this point if desired. Click on the **exit** box. This should take you back to the Data Processing parameters screen.

Click on the **OK** box and you are back in the Method Editor screen. Go to the file box and select the **save** file. Click on **OK** to save the file. Go to the uppermost left hand corner of the screen and select **close**. This will take you back to the AI450 Main Method screen.

7.4.6. Select the **Schedule** box by double-clicking on this box. You can now set up the schedule you will use to run your sample set.

Under the file box select **open**. Click on **anion1.sch**. Click on **OK** and the anion1 schedule screen should appear. In box #1 for the sample name, always type **AUTOCAL1**. In AUTOCAL1 your known standard is run and the instrument is automatically calibrated. In box #2 type your **QC number**. The QC will verify that the instrument has been calibrated properly. Type in subsequent **sample numbers**. Check the run with a standard to ensure that the instrument has not drifted. Include 10% repeats and sample spikes. Under the method column be sure to enter **anion1** for all entries. The vol and std columns should all have a value of 1. In the dilution column the appropriate dilution value can be entered.

When the schedule is complete, go to the file box and select the **save** option. Click on **OK** to save. Go to the uppermost left hand box of the screen and **close** the file. You are now back in the Main Menu.

7.4.7. The instrument is now ready to be set up to run the samples. With the cursor, double-click on the **run** box. The anion1 screen should appear. Go to the box in the uppermost left hand corner and select **maximize**. The anion1 run screen now appears. Load a method and schedule into the computer before you begin the actual run. Select and click on the

load box. Select **anion1** method and click. Click twice on the **OK** box. The method selected will now be loaded on the computer and can be verified by the successive blinking lights at the gradient pump board. When lights finish blinking the schedule can be loaded into the computer.

Go back to the **load** option and select **schedule**. Select **anion1** schedule and click on **OK**. Click on **OK** again. The lights will blink again at the gradient pump screen. When the lights are finished blinking you are ready to run the samples.

Go back to the program board on the gradient pump. Place the local/remote switch in the **remote** mode. This will permit the computer to automatically take over the system in the subsequent step.

Go to the **run** box and select the **start** option. Click on **OK**. The sample changer will now be activated and the sample schedule will run to completion. Sample results will be printed out in mg/L. When the sample run is completed, go to the uppermost left hand corner of the screen and select **close**. Click on **OK**. This will return you to the main menu.

7.5. Dionex shutdown.

7.5.1. Shut off gas at the main cylinder.

7.5.2. Return the CDM and GPM to the **LOCAL** mode.

7.5.3. Stop the pump. Pressure should return to zero.

7.5.4. Shut off the He gas to the eluant degas module and shut off the degas module.

7.5.5. Turn **OFF** the He gas to the auto regeneration system and depressurize.

7.5.6 Turn down intensity on CRT.

8. Calculations

8.1. Sample values can be read in mg/L directly from the printout. Make volume corrections as needed.

8.2. Calculate spike recovery using the following equation:

$$\frac{Ss - S}{C} \times 100 = \% \text{ Recovery}$$

where Ss = spiked sample (mg/L),
S = unspiked sample (mg/L), and
C = amount of spike added (mg/L).

9. Source Materials

9.1. Dionex manual.

PH OF SOIL

Analyte: H^+	**Method No.:** EI520
Matrix: Soil	**Sensitivity:** 0.1 pH unit
Procedure: pH electrode	
Effective Date: 06/02/89	**Author:** Eric Nickell Ernest S. Gladney Mary Carol Williams

SAFETY NOTE: Before beginning this procedure, read all of the Material Safety Data Sheets for the chemicals listed in Sec. 6. Read Sec. 4.3 of the EM-9 Safety Manual for information on personal protective clothing and equipment.

1. Principle of Method

1.1. Hydronium ions in dried soil samples are solvated using repeated agitation.

1.2. $[H^+]$ is quantified with a combined pH electrode.

2. Sensitivity

2.1. Sensitivity is 0.1 pH unit.

3. Accuracy and Precision

3.1. Precision is ±0.1 pH unit.

4. Interferences

4.1. Samples with very low or very high pH may give incorrect readings on the meter. For samples with a true pH >10, the measured pH may be incorrectly low. This error can be minimized by using a low-sodium-error electrode. Strong acid solutions, with a true pH <1, may give incorrectly high pH measurements.

4.2. Temperature fluctuations will cause measurement errors.

4.3. Errors will occur when the electrodes become coated. If an electrode becomes coated with an oily material that will not rinse free, the electrode can either be cleaned with an ultrasonic bath or washed with detergent, rinsed several times with water, placed briefly in 1:10 HCl so that the lower third of the electrode is submerged, and thoroughly rinsed with water.

5. Collection and Storage of Samples

5.1. Samples must be dried and either ground or sieved for proper soil particle washing by distilled water.

5.2. Samples should be analyzed as soon after collection as possoble.

6. Apparatus

6.1. pH meter: portable, Leeds and Northrup (Cat. no. 7417) or equivalent.

6.2. Centrifuge tubes: 50-mL plastic, disposable.

6.3. Combined pH electrode: rugged construction.

6.4. Analytical balance.

6.5. Corner of styrofoam centrifuge tube holder cut to fit balance pan.

6.6. Spatula.

6.7. Ringstand with small clamp.

6.8. Wash bottle and waste beaker.

6.9. Thermometer: range 10-30°C.

6.10. Tubing for air line.

6.11. Volumetric flasks: 2-L and 1-L.

7. Reagents

7.1. Stock buffer solutions for electrode calibration. The suggested pH range is 4.0-11.0.

7.2. Distilled, deionized water.

7.3. Primary standard buffer salts. Available from the National Institute of Standards and Technology (NIST) for use where extreme accuracy is necessary. Preparation of reference solutions from these salts requires special precautions and handling, such as low-conductivity water, drying ovens, and carbon-dioxide-free purge gas.

7.4. Secondary standard buffers. Prepared from NIST salts or purchased as solutions from commercial vendors. These commercially available solutions, validated by comparison with NIST standards, are recommended for routine use.

7.5. Calcium chloride stock solution (3.6 M). Dissolve 1059 g of $CaCl_2 \cdot 2H_2O$ in distilled water in a 2-L volumetric flask. Cool the solution, dilute it to volume with distilled water, and mix well.

7.6. Calcium chloride (0.01 M). Dilute 5 mL of stock 3.6 M $CaCl_2$ to 1.8 L with distilled water. If the pH of this solution is not between 5.0 and 6.5, adjust the pH by adding a little $Ca(OH)_2$ or HCl.

8. Calibration and Standards

8.1. Calibrate the meter within the pH range of the soils to be tested. Soil pH can be estimated by its color and texture, or with knowledge of the geology and botany of the collection area. Group the soil types so that they run under the same calibration.

8.2. Because of the wide variety of pH meters and accessories, detailed operating procedures cannot be incorporated into this method. Each analyst must be acquainted with the operation of each system and familiar with all instrument functions. Special attention to care of the electrodes is recommended.

8.3. Each instrument/electrode system must be calibrated at least two points that bracket the expected pH of the samples and are approximately three pH units or more apart. Repeat adjustments on successive portions of the two buffer solutions until readings are within 0.05 pH units of the buffer solution value.

8.4. Recalibrate the meter, measuring buffer solutions after every ten samples, when subsequent soil pHs change by two units or more, and at the startup each day.

9. Procedure

9.1. Weigh 10.0 g of soil into a centrifuge tube. When the sample amount is limited, 5.0 g will barely be adequate.

9.2. Bulk sample preparation.

9.2.1. Add an equal weight of distilled, deionized water to the tube and cap immediately.

9.2.2. Shake the tube several times. Shake three more times at 10-min intervals.

9.2.3. Let the samples settle for 1 h.

9.2.4. The suggested batch size is five samples prepared at staggered times.

9.3. Cleaning the electrode.

9.3.1. Wash the electrode body and membrane with distilled, deionized water.

9.3.2. Wipe the electrode body dry and air dry the membrane.

9.4. Compensating for sample temperature.

9.4.1. Wash and dry the thermometer.

9.4.2. Determine the sample temperature.

9.4.3. Adjust the pH meter **TEMPERATURE** knob to the proper setting.

9.5. Determining the pH.

9.5.1. Set the centrifuge tube in a styrofoam holder. Lower the clamped electrode into the water layer. Ensure that the liquid is in contact with the liquid junction of the electrode. The electrode membrane may enter the soil layer.

9.5.2. Turn the pH meter from **STANDBY** to **MEASURE**.

9.5.3. Wait exactly 3 min.

9.5.4. Read the pH from the scale, rounding to the nearest tenth. Record the pH in the notebook.

9.5.5. Return the meter to **STANDBY**.

9.6. Sample preparation and pH measurement of calcareous soils.

9.6.1. Add 20 mL of 0.01 M $CaCl_2$ (Step 7.6) solution to 10 g of soil in a 50-mL beaker and stir the suspension several times during the next 30 min.

9.6.2. Let the soil suspension stand for about 30 min to allow most of the suspended clay to settle from the suspension.

9.6.3. Adjust the electrodes in the clamps of the electrode holder so that, when lowered into the beaker, the glass electrode will be immersed well into the partly settled suspension and the calomel electrode will be immersed just deep enough into the clear supernatant solution to establish a good electrical contact through the ground-glass joint or the fiber-capillary hole. Insert the electrode into the sample solution in this manner.

9.6.4. If the sample temperature differs by more than 2°C from the buffer solution, the measured pH values must be corrected.

10. Operation of Equipment

10.1. Consult the pH meter and combined electrode manuals for proper maintenance and care of both.

11. Calculation

11.1. No calculations are necessary. Report as pH in units with a comment of either "soil in water" or "soil in $CaCl_2$."

12. Source Materials

12.1. Michael Peech, Hydrogen-ion Activity in Chemical and Microbiological Properties, part 2, *Methods of Soil Analysis*, American Society of Agronomy, Madison, Wis., pp. 922-923.

12.2. L.P. Gouch, R.C. Severson, and H.T. Shacklette, "Element Concentrations in Soils and other Superficial Materials of Alaska," USGS Professional Paper 1458, U.S. Government Printing Office, 1988.

12.3. EPA SW-846 Method 9045.

ARSENIC, ANTIMONY, TUNGSTEN, and MOLYBDENUM IN SILICATES—RENA

Analyte: As, Sb, W, Mo	**Method No.:** EI630
Matrix: Silicates	**Minimum Detectable Activity:** As 5 ng/g, W 10 ng/g, Sb 10 ng/g, Mo 50 ng/g
Procedure: Radiochemical epithermal neutron activation	**Accuracy and Precision:** 95% ± 10%
Effective Date: 08/01/88 to 09/01/90	**Author:** Ernest S. Gladney Kenneth W. Sims

SAFETY NOTE: Before beginning this procedure, read all of the Material Safety Data Sheets for the chemicals listed in Sec. 7. Read Sec. 4.3 of the EM-9 Safety Manual for information on personal protective clothing and equipment.

1. Principle of Method

1.1. Silicate samples are irradiated with epithermal neutrons.

1.2. Irradiated samples are fused and dissolved and As, Sb, W, and Mo are separated by inorganic ion exchange on Al_2O_3.

1.3. The separated As, Sb, W, and Mo are quantified using high-resolution gamma-ray spectrometry.

2. Sensitivity

2.1. Approximately 5 ng/g of As, 10 ng/g of Sb, 10 ng/g of W, and 50 ng/g of Mo can be detected. Sensitivity is a function of sample size. Sensitivity for Mo is also a function of the amount of P and U in the sample, since both these elements provide a positive interference.

3. Accuracy and Precision

3.1. Replicate analyses of the NIST SRM 1633a yield results that are within 95% of the certified (As, Sb) and consensus (W, Mo) values. Based upon the standard deviation of the mean of these analyses, this procedure has a precision of ± 4% for As and Sb, ± 6% for Mo, and ± 10% for W.

3.2. The results in Table I are typical for replicate As, Sb, W, and Mo determinations on several NIST and USGS reference materials.

4. Interferences

4.1. The 561-keV gamma-ray of ^{76}As interferes with the measured ^{122}Sb 564-keV gamma ray and must be corrected for. This correction is approximately 2% if the sample is allowed to decay for 72 h before measuring Sb (^{122}Sb $t_{1/2}$ = 2.72 d) since approximately 90% of the As activity will have decayed (^{76}As $t_{1/2}$ = 1.10 d).

4.2. Phosphorus is also retained on the column and the 1.7-MeV β^- of ^{32}P increases the background in the low ion energy gamma-ray spectra, which interferes with the measurement of the Mo 140.5-keV gamma-ray. Since the neutron cross section of ^{31}P follows the 1/v law (Steinnes), using epithermal neutrons for the irradiations minimizes this interference.

4.3 The ^{235}U (n,f) ^{99}Mo contribution to the measured Mo concentration must also be corrected for. Once again the fission of ^{235}U is greatly suppressed with epithermal neutrons, substantially reducing the magnitude of this correction.

5. Collection and Storage of Samples

5.1. Grind samples so that a homogenous blend is produced. To avoid contamination, particularly for tungsten, samples **must not** be ground in a tungsten-carbide mill.

5.2. Chemically separate and count the irradiated sample within 24 h of irradiation since ^{76}As and ^{187}W have short half lives (1.10 and 0.996 days, respectively).

6. Apparatus

6.1. Nuclear reactor: equipped with an epithermal neutron irradiation facility. A boron-filtered flux is preferred, but cadmium filtering will be sufficient.

6.2. Irradiation vial: size 0.0 snap-cap polyethylene vial and polyethylene rabbit.

6.3. Sample grinder: alumina mill for shatter box, Spex 8505.

6.4. Furnaces: two Lindberg high-temperature box furnaces.

6.5. Digestion vessels: 50-mL nickel crucibles, Spex.

6.6. Ion-exchange columns: borosilicate low-pressure ion-exchange columns 15 cm long by 1.0 cm i.d., fitted with 500-mL reservoirs, Bio-rad.

6.7. Counting vials: 25-mL, screw-cap polyethylene scintillation vials, Packard.

6.8. Beakers: 500-mL, glass.

6.9. Watch Glass: 10-cm, glass.

6.10. Gamma-ray spectrometer: high-resolution intrinsic Ge detector with preamp, linear amplifier, analog-to-digital converter, and 4096-channel pulse height analyzer.

6.11. Filter paper: 24-mm, glass-fiber filter paper, Whatman.

6.12. Filter paper: 4.25-cm, Whatman No. 2.

7. Reagents

7.1. Hydrochloric acid (0.5 N).

7.2. Aluminum oxide. 80 mesh, acidified, chromatographic grade.

7.3. Sodium hydroxide (reagent-grade, pellets).

7.4. Sodium peroxide (reagent-grade, granular).

7.5. Standard solutions (1000 μg/mL). Aqueous As, Mo, Sb, and W standards for plasma emission spectrometry, Spex.

7.6. Standard solution (100 μg/mL). Gold standard for plasma emission spectrometry, Spex.

8. Calibration and Standards

8.1. Combine 1 mL each of 1000 μg/mL Spex As, Sb, W, and Mo standard solutions. Pipette 50 μL of this mixed standard solution onto Whatman glass-fiber filter papers; this produces a concentration of 12.5 μg for each element. Air-dry, fold, and insert the filter papers into snap-cap polyethylene vials and irradiate along with the samples.

8.2. Include flux monitors in the second position of each rabbit in order to normalize the activities of standards and sample fractions to the same neutron dosage. Prepare monitors by pipetting 50 μL of 100 μg/mL gold solution onto Whatman No. 2 filter papers, air-dry, fold, and insert into the snap-cap polyethylene vials.

9. Procedure

9.1. Grind samples to approximately minus 80 mesh in a shatter-box mill.

9.2. Encapsulate approximately 300 mg of each sample in snap-cap polyethylene vials. Place this sample fraction in a polyethylene rabbit and irradiate for 40-80 min in the boron-lined epithermal neutron port of the Omega West Reactor.

9.3. Radiochemical separation.

9.3.1. Column preparation. Slurry 5-6 gm of Al_2O_3 with 0.5 N HCl and pour into the glass columns, forming a bed approximately 6 cm high. Precondition columns by passing 30 mL of 0.5 N HCl at maximum flow rate. Since columns can be kept indefinitely if moist, the required number of columns may be prepared at the beginning of the day.

9.3.2. Sample fusion. Within 3-4 h following irradiation, combine the sample with 5 g of Na_2O_2 and 2 g of NaOH in a nickel crucible and cover with a nickel lid. Preheat this mixture in a high-temperature furnace at 200°C for 5 min. Fuse the sample in another high-temperature furnace at 600-700°C for 15 min.

9.3.3. Fusion melt dissolution. Allow the resulting fusion melt to solidify for approximately 2 min). Place the crucible in a 500-mL glass beaker and cover with a watch glass. Using polyethylene squeeze bottles, leach the fusion cake with 100 mL of H_2O and dissolve it with 500 mL of 0.5 N HCl. All dissolved melts have a pronounced green color due to the Ni extracted from crucibles during fusion. Be **extremely** careful about the amount and concentration of acid used, as this can seriously compromise the retention of these elements on the Al_2O_3 column.

9.3.4. Column separation. The solution (<0.5 N HCl) containing the dissolved sample is passed through the ion-exchange column at a **maximum** flow rate of 2 mL/min. The ion-exchange columns will often plug up during separation because of reprecipitation of NiO (black) or hydrated silica (white and gelatinous). If this occurs, stir the tops of the columns with a glass rod to maintain flow.

9.3.5. Wash the resin into the vial with H_2O.

9.4. Gamma-ray spectroscopy. Count the resins on HPGe detectors. Two counts are employed to take advantage of the relative half lives and activities of the measured isotopes (See Table II).

10. Operation of Equipment

10.1. See the operation manual for the gamma-ray spectrometer (HPGe detector).

11. Calculation

11.1. The counting efficiency of the detector is calculated using the following equation.

$$E = \frac{\left(\frac{Cs}{Ts} - \frac{Cb}{Tb}\right) e^{\lambda(t_2 - t_1)}}{Ws} ,$$

where E = efficiency (counts/s per μL),
Cs = gross counts for the standard,
Ts = counting time for the standard,
Cb = gross counts for the background,
Tb = counting time for the background (s),
Ws = weight of element in standard (g),
λ = decay constant for isotope measured,
t_2 = time counting, and
t_1 = time at end of irradiation.

NOTE: $e^{\lambda(t_2 - t_1)}$ takes into account the decay of the sample since irradiation.

11.2. The standard deviation of the efficiency is given by:

$$[X] = \frac{\left(\frac{Cx}{Tx} - \frac{Cb}{Tb}\right) e^{\lambda(t_2 - t_1)}}{E \times W} ,$$

where [X] = sample concentration,
Cx = gross counts of sample,
Tx = count time of sample,
Cb = gross counts of background,
Tb = count time of background,
E = counting efficiency from Step 11.1,
W = weight of sample,
λ = decay constant for the measured isotope,
t_2 = time of counting, and
t_1 = time at the end of irradiation.

11.3. The standard deviation of the calculated sample concentration is given by:

$$Sx = |X| \times \frac{\sqrt{Cs - Cb}}{Cx - Cb} ,$$

where Sx = uncertainty of sample concentration,
X = sample concentration,
Cx = gross counts of sample, and
Cb = gross counts of background.

11.4. Background standard deviation is given by:

$$SB = B \times \frac{\sqrt{Cb}}{Cb} ,$$

where SB = uncertainty of background activity,
Cb = gross counts of background, and
B = background count rate (Cb/Cb).

11.4. Propagated uncertainty of sample concentration is calculated as follows:

$$Ux = X \sqrt{(SE)^2 + (SX)^2 + (SB)^2 + (SS)^2} ,$$

where UX = the propagated uncertainty of the analyte concentration,
SE = the standard deviation of the counting efficiency,
SB = the standard deviation of the background, and
SS = calculated uncertainty of the standard solution.

12. Source Materials

12.1. K. W. Sims and E. S. Gladney, "Determination of Arsenic, Antimony, Tungsten and Molybdenum in Silicate Materials by Epithermal Neutron Activation and Inorganic Ion Exchange," *Analytical Chemical Acta* (in press).

12.2. E. S. Gladney, "Determination of Arsenic, Antimony, Molybdenum, Thorium and Tungsten in Silicates by Thermal Neutron Activation and Inorganic Ion Exchange," *Anal. Lett.*, **5**, 429-435 (1978).

12.3. F. Girardi, R. Pietra, and E. Sabbioni, "Radiochemical Separations by Retention on Ionic Precipitate Absorption Tests on Eleven Materials," *J. Radioanal. Chem.* **5**, 141-147 (1970).

12.4. K. W. Sims, "Chemical Fractionation During Formation of the Earth's Core and Continental Crust: Clues from As, Sb, W and Mo," unpublished Master's thesis, University of New Mexico (1990).

12.5. E. S. Gladney, D. R. Perrin, J. P. Balagna, and C. L. Warner, "Evaluation of a Boron-filtered Epithermal Neutron Irradiation Facility," *Anal. Chem.* **52**, 2128-2132 (1980).

12.6. E. Steinnes, "Epithermal Neutron Activation Analysis of Geological Material," In *Activation Analysis in Geochemistry and Cosmochemistry* (eds., A. Brunfelt and E. Steinnes), Universitetesforlaget, Oslo, Norway, pp. 113-129 (1971).

12.7. E. S. Gladney, C. E. Burns, and I. Roelandts, "1982 Compilation of Elemental Concentration in Eleven United States Geological Survey Rock Standards," *Geostandards Newletter* 7, 3-226 (1983).

12.8 E. S. Gladney and I. Roelandts, "1987 Compilation of Elemental Concentration Data for USGS BHVO-1, MAG-1, QLO-1 RGM-1, SCo-1, SDC-1, SGR-1, and STM-1," *Geostandards Newletter* **12**, 253-367 (1988).

12.9 E. S. Gladney, B. T. O'Malley, I. Roelandts, and T. E. Gills, "Compilation of Elemental Concentration Data for NBS Biological, Geological and Environmental Standard Reference Materials," *National Bureau of Standards Special Publication 260-111* (1987).

TABLE I. ANALYSIS OF REFERENCE MATERIALS

Reference Materials	As (μg/g)						Sb (μg/g)					
	EI630			Cert. Value			EI630			Cert. Value		
USGS AGV-1	0.98	±	0.03	0.84	±	0.27	4.0	±	0.3	4.4	±	0.4
USGS RGM-1	3.10	±	0.08	3.00	±	0.40	1.30	±	0.02	1.26	±	0.07
USGS BHVO-1	0.54	±	0.05	0.40	±	0.22	0.17	±	0.01	0.16	±	0.04
USGS BCR-1	0.57	±	0.03	0.64	±	0.14	0.58	±	0.04	0.62	±	0.10
NBS 1633a	151	±	6	145	±	15	7.0	±	0.3	7.0	±	0.5
	W (μg/g)						Mo (μg/g)					
	EI630			Cert. Value			EI630			Cert. Value		
USGS AGV-1	0.7	±	0.1	0.53	±	0.09	2.3	±	0.4	3	±	1
USGS RGM-1	1.49	±	0.02	1.50	±	0.18	2.6	±	0.2	2.3	±	0.3
USGS BHVO-1	0.22	±	0.02	0.27	±	0.06	1.04	±	0.08	1.02	±	0.10
USGS BCR-1	0.37	±	0.06	0.40	±	0.09	1.6	±	0.2	1.2	±	0.2
NBS 1633a	5.5	±	0.6	5.7	±	0.7	29	±	2	30	±	3

TABLE II. NUCLEAR PARAMETERS FOR AS, SB, W, AND MO.

Element	Stable Isotope	Isotopic Abundance (%)	σ_o (barns)	$I=0.44\sigma_o$	Radionuclide	$T_{1/2}$ (days)	Energy (keV)	Branching Ratio (%)
As	^{75}As	100	4.3	38	^{76}As	1.10	559.1	44.6
Sb	^{121}Sb	57.3	6.2	169	^{122}Sb	2.72	564.1	63.0
	^{123}Sb	43.7	3.4	183	^{124}Sb	60.20	1691.0	45.7
W	^{186}W	28.6	37	500	^{187}W	0.996	685.7	32.0
Mo	^{98}Mo	24.13	0.14	7.1	$^{99}Mo \rightarrow \beta \rightarrow {}^{99m}Tc$	2.75-0.25	140.4	81.0

MERCURY IN ENVIRONMENTAL MATERIALS – COLD VAPOR GOLD FILM ANALYZER

Analyte: Mercury	**Method No.:** EI730
Matrix: Water, soils, sediments	**Minimum Detectable Concentration:** 3 ng/g in solid, 0.05 ng/mL in water
Procedure: Cold vapor gold film resistance analysis	
Effective Date: 10/01/87	**Author:** Ernest S. Gladney Michael G. Bell

SAFETY NOTE: Before beginning this procedure, read all of the Material Safety Data Sheets for the chemicals listed in Sec. 7. Read Sec. 4.3 of the EM-9 Safety Manual for information on personal protective clothing and equipment.

1. Principle of Method

1.1. Leach mercury from soils and sediments using a simple cold-acid procedure. Waters may be run directly without additional processing.

1.2. Reduce Hg^+ in solution to Hg with $SnCl_2$.

1.3. Purge Hg from solution with a stream of air and almagamate it on gold film contained within the analyzer system.

1.4. Determine the Hg concentration by measuring the change in electrical resistance of the gold film.

2. Sensitivity

2.1. Approximately 1 ng of Hg can be detected from a 30-mL sample solution, yielding a detection limit of 0.05 ng/mL in water and 3-5 ng/g in solid samples. No system blank has been observed.

3. Accuracy and Precision

3.1. The following results have been obtained in 25-mL aliquots of NIST SRM 1642B.

CVGFA (ng/mL)	Certified Value (ng/mL)
1.62 ± 0.10	1.49 ± 0.06

3.2. In HNO_3-HCl extracts of 1-g samples of soil and sediment reference materials the following results have been obtained (ng/g):

Agency	Material	CVGFA mean ± SD	(n)	Certified or consensus value mean ± SD
NIST	1633A	133 ± 14	9	160 ± 10
	1646	65 ± 16	10	63 ± 12
	8032	69 ± 3	8	57 ± 4
	8033	110 ± 10	3	104 ± 12
CCRMP	SO-1	25 ± 5	54	21 ± 3
	SO-2	80	2	82 ± 12
	SO-3	17 ± 4	5	16 ± 5
	SO-4	40 ± 8	5	29 ± 4
USGS	GXR-1	3900 ± 200	4	4000 ± 300
	GXR-2	2800 ± 100	4	2700 ± 600
	GXR-3	350 ± 30	4	340 ± 40
	GXR-5	180 ± 30	4	160 ± 10
	GXR-6	73 ± 5	7	70 ± 20

3.3. A series of standard additions was run with NIST SRM 1645, a Chicago River sediment. This sediment is very oily and should present some of the most difficult matrix problems. The following spike recoveries were obtained:

Spike added (ng)	Spike recovered (ng)	(n)
5.0	5.7 ± 0.4	3
10.0	10.2 ± 0.2	4
15.0	15.1 ± 0.4	3

4. Interferences

4.1. Oxidizing agents in the sample retard the reduction and evolution of Hg.

4.2. Serious problems have been observed with what we believe to be organic acids that are extracted from soil and sediment samples along with the Hg. These samples are highly colored and foam extensively during the purging operation, and transfer material to the gold film, yielding consistently high results. At present, dilution and reanalysis of these samples seems to be the only alternative, with accompanying loss in detection limits.

4.3. High concentrations of purgeable halogens (e.g., from HCl) can cause rapid deteoriation of the gold film.

5. Collection and Storage of Samples

5.1. Collect water samples in acid-washed polyethylene bottles to which 10 mL of concentrated HNO_3 containing 20 mg of $K_2Cr_2O_7$ is added before sample introduction. Run samples as soon as possible after collection. Discard after one week.

5.2. Collect soil and sediment samples in acid-washed glass or polyethylene containers. Do NOT dry the samples to be leached for Hg. Determine the water content on separate aliquots of sample and correct the final result to dry-weight basis if desired. Freeze samples for long-term storage.

6. Apparatus

6.1. Gold film analyzer: Jerome, Model 511.

6.2. Purge kit for gold film analyzer.

6.3. Bottles: 500-mL, polyethylene.

6.4. Pipettes: 50-, 100-, 250-, 500-, and 1000-μL, with disposable tips.

6.5. Pipette: 5-mL, adjustable, with disposable tip.

6.6. Beakers: 150- and 4000-mL, Pyrex.

6.7. Flasks: 100- and 500-mL, volumetric.

6.8. Funnels: filtering, 60° glass, short stem.

6.9. Funnel rack: adjustable, 6-funnel capacity.

6.10. Wash bottles: 500-mL, polyethylene.

6.11. Graduated cylinder: 25-mL, glass.

6.12. Analytical balance: top loading, 100-g capacity.

6.13. Ring stand with adjustable clamp.

6.14. Filter paper: Whatman No. 41, 15-cm diam.

7. Reagents

7.1. Add 0.5 mL of water to 20 mg of $K_2Cr_2O_7$. Slurry and add 1 mL of concentrated HNO_3. Stir to dissolve the $K_2Cr_2O_7$ and add 9 mL of concentrated HNO_3.

7.2. Stannous chloride (10% solution). Dissolve 9 g of $SnCl_2$ in 87 mL of mercury-free distilled water and add 3.0 mL of concentrated HCl.

7.3. Hydrochloric acid (concentrated, mercury-free).

7.4. Nitric acid (concentrated, mercury-free).

7.5. Distilled water (mercury-free).

7.6. 20% HNO_3 • 1% HCl. Add 100 mL of concentrated HNO_3 and 1.0 mL of concentrated HCl to 400 mL mercury-free distilled water in a 500-mL flask.

7.7. Mercury standard solution, (1000 μg/mL) Spex Industries, Edison, N.J.

8. Calibration and Standards

8.1. Prepare secondary Hg standards of 10 μg/g and 10 ng/g.

8.1.1. Add 1.0 mL of the 1000 μg/g primary standard solution to approximately 50 mL of 20% HNO_3 • 1% HCL solution in a 100-mL volumetric flask. Dilute to volume with 20% HNO_3 • 1% HCl. Prepare fresh daily. This standard is 10 μg/g Hg.

8.1.2. Add 0.10 mL of the 10 μg/g secondary standard solution to approximately 50 mL of 20% HNO_3 • 1% HCL solution in a 100-mL volumetric flask. Dilute to volume with 20% HNO_3 • 1% HCl. Make fresh daily. This standard is 10 ng/g Hg.

8.2. Establish a calibration curve by analyzing 30-mL aliquots of the 20% HNO_3 • 1% HCl acid mixture with 0, 0.25, 0.5, 1.0, and 2.5 mL of the 10 ng/g secondary standard added.

8.3. Run certified reference materials with each batch of samples.

8.4. For new or unusual samples, run standard additions to their leach solutions.

9. Procedure

9.1. Glassware cleaning.

9.1.1. Successful mercury analysis by any procedure requires rigorous contamination control. All glassware must be soaked in 50% HNO_3 overnight and rinsed with mercury-free distilled water just before use.

9.1.2. The mercury evolution glassware from the gold film apparatus is also soaked in 50% HNO_3 overnight and washed with distilled water between samples.

NOTE: A more important problem is thorough removal of $SnCl_2$ residue before introduction of the next sample. We have observed no Hg cross-contamination in this apparatus between samples.

9.2. Soil and sediment leaching procedure.

9.2.1. Weigh 1.0 g of sample into a 150-mL acid-cleaned Pyrex beaker.

9.2.2. Add 20 mL of concentrated HNO_3 and 1 mL of concentrated HCl to the sample and swirl carefully to ensure complete wetting.

9.2.3. Let sample stand for 15-30 min with occasional swirling.

9.2.4. During the cold acid leach, set up a filter stand with acid-washed glass funnels. Fold a 15-cm Whatman No. 41 filter paper to fit the funnels and wet the paper. Place a 100-mL volumetric flask below each funnel to collect the leaching filtrate.

9.2.5. Wash the sides of the beakers with approximately 20 mL of distilled water at the end of the leaching period.

9.2.6. Filter the leach solution. Wash the entire contents of the beaker into the funnel. Rinse the beaker carefully and add this rinse to the funnel.

9.2.7. After filtering, dilute each filtrate to 100 mL with distilled water. Cap the flasks and mix well. The leach solution is now ready for mercury analysis.

9.3. Cold vapor gold film analysis.

9.3.1. The basic setup of the apparatus is shown in Fig. 1.

9.3.2. At the beginning of each day, or whenever the Model 511 indicates that the gold film is saturated, bake out the film using the film heat procedure. Replace the purging apparatus on the inlet port of the Model 511 with a "Zero Air Filter" and depress the **FILM HEAT** button. The bakeout cycle lasts 15 min. At the conclusion of the bakeout, depress and hold the **SENSOR STATUS** button and adjust the **BRIDGE BALANCE** with the special tool until a reading of 5 is displayed.

9.3.3. Measure a 30-mL aliquot of a water sample into the reaction vessel of the analyzer. For leach samples, use only 20 mL if the sample is relatively clear. For highly colored samples (intense straw or yellow color from organic compounds that have co-extracted), 10 mL or less may be as much sample as the purging system can handle without foaming becoming a problem. Experience will help dictate the best starting volumes. Dilute contents of reaction vessel to 20 mL with 20% HNO_3 • 1% HCl solution.

9.3.4. Clamp the reaction vessel in the ring stand, insert the purging apparatus, and turn the combined unit to an angle of 45°. This helps to minimize foaming.

9.3.5. Draw approximately 1.5 mL of $SnCl_2$ solution into a syringe. Start the purging pump in the Model 511 by pressing the **SAMPLE START** button. Immediately inject the $SnCl_2$ solution into the purging apparatus through the rubber septum. The reducing agent will be immediately drawn into the reaction vessel.

9.3.6. The purging action will continue for 2 min, at which time the Model 511 stops and displays the gold film resistance reading. Record the sample volume and resistance reading in the Laboratory notebook.

9.3.7. Remove the purging apparatus from the reaction vessel. Rinse the purging section throughly with distilled water, especially the interior of the purge tube, to remove all traces of the previous sample and the $SnCl_2$ reducing solution. Rinse the reaction vessel throughly with distilled water and discard all rinse solution.

9.3.8. Check the degree of saturation of the gold film by depressing and holding the **SENSOR STATUS** button. Note the degree of saturation and release the button. If the film is more than 95% saturated, return to Step 9.2.2. If the film saturation reading is less than 95%, return to Step 9.2.3 to begin the next sample.

10. Operation of Equipment

10.1. Refer to the Jerome Instrument Co. manual for the Model 511.

11. Calculations

11.1. Run the Hg standard solutions described in Step 8.2 along with the samples.

11.2. Construct a standard curve by plotting the Model 511 readout versus total nanograms of Hg in the reaction vessel.

11.3. Read the total mercury content of the sample from the standard curve.

11.4. Calculate the mercury concentration in the original sample.

11.4.1. Solids.

$$Hg = \frac{A \times B}{C \times W}$$

where Hg = concentration of mercury in original sample (ng/g),
A = total Hg from standard curve (ng).
B = total sample leachate volume (mL),
C = volume of sample in reaction vessel (mL), and
W = weight of solid sample leached (g).

11.4.2. Waters.

$$Hg = \frac{A \times 1000}{C}$$

where Hg = concentration of mercury in original sample (ng/L),
A = total Hg from standard curve (ng), and
C = volume of liquid sample in reaction vessel (mL).

12. Source Materials

12.1. A. Mudroch and E. Kokotich, "Determination of Mercury in Lake Sediments using a Gold Film Mercury Analyzer," *Analyst* **112**, 709-710 (1987).

12.2. E. S. Gladney, J. W. Owens, and D. R. Perrin, "The Determination of Mercury in Environmental Materials," Los Alamos Scientific Laboratory report LA-7865-MS (1979).

12.3. R. V. Coyne and J. A. Collins, "Loss of Mercury from Water During Storage," *Anal. Chem.* **44**, 1093-1096 (1972).

12.4. "Model 511 Gold Film Mercury Analyzer," Jerome Instrument Corporation, Jerome, Ariz., Revised 6/86.

12.5. E. S. Gladney and J. W. Owens, "Determination of Mercury by Carrier Free Combustion Separation and Flameless Atomic Absorption Spectrometry," *Analytica Chimica Acta* **90**, 271-274 (1977).

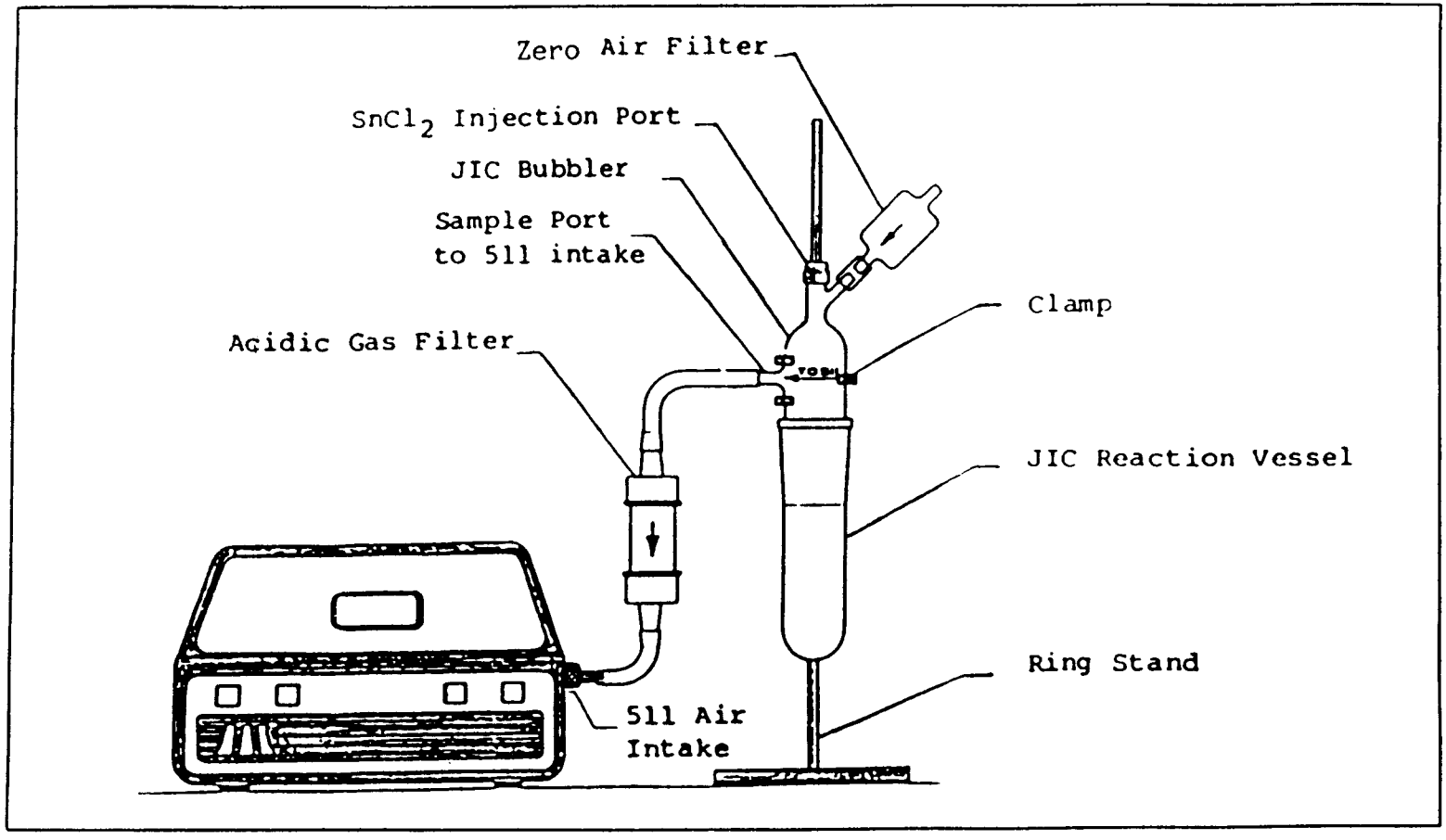

Fig. 1. Reaction apparatus set-up.

SAMPLE PREPARATION FOR SPECTROCHEMICAL ANALYSES OF TOTAL RECOVERABLE ELEMENTS (EPA METHOD 200.2)

Analyte: Trace metals	**Method No.:** EI735
Matrix: Various	
Effective Date: 01/01/91	**Author:** Mary Carol Williams

SAFETY NOTE: Before beginning this procedure, read all of the Material Safety Data Sheets for the chemicals listed in Sec. 7. Read Sec. 4.3 of the EM-9 Safety Manual for information on personal protective clothing and equipment.

1. Principle of Method

1.1. This method provides sample preparation procedures for the determination of total recoverable elements in ground waters, surface waters, drinking water supplies, waste waters, sediments, sludges, and solid waste samples, and is applicable for the following elements:

Analyte		Chemical Abstracts Services Registry Numbers
Aluminum	(Al)	7429-90-5
Antimony	(Sb)	7440-36-0
Arsenic	(As)	7440-38-2
Barium	(Ba)	7440-39-3
Beryllium	(Be)	7440-41-7
Cadmium	(Cd)	7440-43-9
Calcium	(Ca)	7440-70-2
Chromium	(Cr)	7440-47-3
Cobalt	(Co)	7440-48-4
Copper	(Cu)	7440-50-8
Iron	(Fe)	7439-89-6
Lead	(Pb)	7439-92-1
Lithium	(Li)	7439-93-2
Magnesium	(Mg)	7439-95-4

Analyte		Chemical Abstracts Services Registry Numbers
Aluminum	(Al)	7429-90-5
Manganese	(Mn)	7439-96-5
Molybdenum	(Mo)	7439-98-7
Nickel	(Ni)	7440-02-0
Phosphorus	(P)	7723-14-0
Potassium	(K)	7440-09-7
Selenium	(Se)	7782-49-2
Silica	(SiO_2)	7631-86-9
Silver	(Ag)	7440-22-4
Sodium	(Na)	7440-23-5
Strontium	(Sr)	7440-24-6
Thallium	(Tl)	7440-28-0
Thorium	(Th)	7440-29-1
Uranium	(U)	7440-61-1
Vanadium	(V)	7440-62-2
Zinc	(Zn)	7440-66-6

1.2. Samples prepared by this method can be analyzed by (1) inductively coupled plasma atomic emission spectrometry (ICPAES), Method 200.7, (2) inductively coupled plasma mass spectrometry (ICPMS), Method 200.8, and (3) direct aspiration flame atomic absorption (FAA) using the 200-series methodology given in "Methods for Chemical Analysis of Water and Wastes - EPA 600/4-79-020, March 1983." Samples may also be analyzed by the stabilized temperature platform furnace atomic absorption (ETVAA) technique. See the above analytical methodology for selection of the appropriate method for the determination of a specific analyte.

1.3. This method is suitable for the preparation of aqueous samples containing silver concentrations up to 0.2 mg/L. For the analysis of waste-water samples containing higher concentrations of silver, prepare succeeding smaller, well-mixed aliquots until the analysis solution contains <0.2 mg/L silver.

1.4. Solid and aqueous samples are prepared in a similar manner for analysis. Metals and toxic elements are extracted from either solid samples or the solid portion of aqueous samples by refluxing the sample for 30 min in a mixture of nitric

and hydrochloric acids. After extraction, the solubilized analytes are diluted to specified volumes with deionized distilled water. Diluted samples are to be analyzed by mass and/or atomic spectrometry methods within 72 h after preparation.

2. Definitions

2.1. Total recoverable. The concentration of analyte determined to be in either a solid sample or an unfiltered aqueous sample following treatment by refluxing with hot dilute mineral acid.

3. Interferences

3.1. Contamination is of prime concern during sample preparation. The work area, including the bench top and fume hood, should be periodically cleaned to eliminate environmental contamination.

3.2. Chemical interferences are matrix dependent.

3.3. Silica from the glassware will grow into the sample solution during and following sample processing. To reduce silica contamination, analyze the sample as soon as possible after final dilution. A laboratory reagent blank can be used to monitor the effect.

4. Sample Collection and Preservation

4.1. For the determination of total recoverable elements in aqueous samples, acidify with 1:1 nitric acid at the time of collection to a pH of <2. The sample should not be filtered before analysis.

NOTE: Samples that cannot be acid preserved at the time of collection because of sampling limitations or transport restrictions, should be acidified with nitric acid to a pH of <2 upon receipt in the laboratory (normally, 3 mL of 1:1 nitric acid per liter of sample is sufficient for most ground, surface, and drinking-water samples). Following acidification, the sample should be held for 16 h before withdrawing an aliquot for sample processing.

4.2. Solid samples usually require no preservation before analysis other than storage at 4°C.

5. Apparatus

NOTE: For the determination of trace levels of elements, contamination and loss are of prime consideration. Potential contamination sources include improperly cleaned laboratory apparatus and general contamination within the laboratory environment from dust, etc. A clean laboratory work area, designated for trace-element sample handling, must be used. Sample containers can introduce positive and negative errors in the

determination of trace elements by (1) contributing contaminants through surface desorption or leaching, or (2) depleting element concentrations through adsorption processes. All reuseable labware (glass, quartz, polyethylene, Teflon, etc.) including the sample containers should be cleaned before use. Labware should be soaked overnight and thoroughly washed with laboratory-grade detergent and water, rinsed with water, and soaked for 4 h in a mixture of dilute nitric and hydrochloric acid, followed by rinsing with water, ASTM type I water, and oven drying. *Chromic acid must not be used for the cleaning of glassware.*

5.1. Volumetric flasks.

5.2. Graduated cylinders.

5.3. Centrifuge tubes: glass.

5.4. Pipettes: assorted sizes.

5.5. Centrifuge tubes: 50-mL, polyethylene.

5.6. Mash bottle: one-piece stem, polyethylene bottle with screw closure, 500-mL.

5.7. Micropipettes. Rainin, various sizes.

5.8. Balance. Analytical, capable of accurately weighing to 0.1 mg.

5.9. Hot plate. Corning PC100 or equivalent.

5.10. Centrifuge. Steel cabinet with guard bowl, electric timer, and brake.

6. Reagents

6.1. Reagents may contain elemental impurities which might affect analytical data. High-purity reagents should be used whenever possible. All acids used for this method must be of ultra high-purity grade.

6.1.1. Nitric acid (concentrated, sp. gr. 1.41).

6.1.2. Nitric acid (1:1). Dilute 500 mL of concentrated nitric acid to 1000 mL with ASTM type I water.

6.1.3. Hydrochloric acid (concentrated, sp. gr. 1.19).

6.1.4. Hydrochloric acid (1:4). Dilute 200 mL of concentrated hydrochloric acid to 1000 mL with ASTM type I water.

6.2. Water. For all sample preparation and dilutions, ASTM type I water is required. Suitable water may be prepared by passing distilled water through a mixed bed of anion and cation exchange resins.

7. Calibration and Standards

7.1. Micropipettes should be calibrated quarterly at 10%, 50%, and 100% of maximum volume.

8. Procedure

8.1. Sample preparation - aqueous samples.

8.1.1. To determine total recoverable elements in water or waste water, take a 25-50 mL aliquot from a well-mixed, acid-preserved sample containing not more than 0.25% (w/v) total solids, and transfer it to a 50-mL centrifuge tube. If total solids are greater than 0.25%, reduce the size of the aliquot by a proportionate amount.

8.1.2. Add 0.25-0.50 mL of concentrated nitric acid and 0.125-0.250 mL concentrated hydrochloric acid. Heat on a hot plate until the volume has been reduced to approximately 5 mL, ensuring that the sample does not boil. Evaporation time for 50 mL of sample at 85°C is approximately 1 h.

8.1.3. Cover the beaker with a watch glass, reflux for 30 min (very slight boiling may occur), and allow to cool.

8.1.4. Dilute to starting volume with ASTM type I water. Centrifuge the sample or allow it to stand overnight to separate insoluble material.

8.1.5. The sample is now ready for analysis by either ICPAES or direct-aspiration flame and stabilized temperature platform furnace atomic absorption spectroscopy. For analyses by ICPMS, pipette 20 mL of the prepared solution into a 50-mL volumetric flask and dilute to volume with ASTM type I water. Analyses should be performed within 72 h of the completed preparation.

8.2. Sample preparation - solid samples.

8.2.1. To determine total recoverable elements in solid samples (sludge, soils, sediments), thoroughly mix the sample to achieve homogeneity and accurately weigh a 1.0 ± 0.01 g portion of the sample.

8.2.2. Transfer the aliquot to a 50-mL centrifuge tube. Add 4 mL of 1:1 nitric acid and 10 mL of 1:4 hydrochloric acid.

8.2.3. Cover with a watch glass, heat on a hot plate at 95°C, and gently reflux for 30 min (very slight boiling may occur). Allow the sample to cool.

8.2.4. Dilute to volume with ASTM type I water. Centrifuge the sample or allow to stand overnight to separate insoluble material.

8.2.5. The sample is now ready for analysis by either ICPAES or direct-aspiration flame and stabilized temperature platform furnace atomic absorption spectroscopy. For analysis by ICPMS, pipette 10 mL into a 50-mL volumetric flask and dilute to volume with ASTM type I water. Analyses should be performed within 72 h of the completed preparation.

8.2.6. Determine the percent solids in the sample for use in calculations and for reporting data on a dry-weight basis.

WATER (BOUND AND UNBOUND) IN GEOLOGICAL MATRICES — HIGH TEMPERATURE COULOMETRY

Analyte: H_2O^- and H_2O^+	**Method No.:** EI790
Matrix: Rocks	**Minimum Detectable Concentration:** 100 ppm
Procedure: High-temperature moisture evolution with coulometric titration	
Effective Date: 04/01/86 to 08/01/92	**Author:** Ernest S. Gladney

SAFETY NOTE: Before beginning this procedure, read all of the Material Safety Data Sheets for the chemicals listed in Sec. 7. Read Sec. 4.3 of the EM-9 Safety Manual for information on personl protective clothing and equipment.

1. Principle of Method

1.1. Small samples of geological materials are weighed into tantalum boats and inserted into the oven of a DuPont 903H Moisture Analyzer. Oven heat vaporizes unbound water at 110°C or bound water at 1000°C from the sample into dry nitrogen carrier gas that transports the water to the electrolytic cell. A thin film of phosphorous pentoxide deposited between two helically wound electrodes absorbs the water.

1.2. The water reacts with the P_2O_5 to form H_3PO_4, which is electrolyzed back to P_2O_5, hydrogen, and oxygen (coulometric regeneration). The charge required to completely regenerate the P_2O_5 is integrated and displayed on the front of the instrument.

2. Sensitivity

2.1. About 10 μg of water can be detected in a 100 mg sample of rock, yielding a detection limit of about 0.01% or 100 ppm.

3. Accuracy and Precision

3.1. There is a wide variety of international rock reference materials which have data on unbound (H_2O^-) and bound (H_2O^+) water measured by several other methods. The following table shows comparative data on some U.S. Geological Survey (USGS) rock reference materials:

USGS	H_2O^-		H_2O^+	
Material	This Method	Literature	This Method	Literature
AGV-1	0.96 ± 0.04	1.01 ± 0.21	0.74 ± 0.04	0.80 ± 0.18
DTS-1	0.10 ± 0.01	0.06 ± 0.03	0.44 ± 0.04	0.43 ± 0.10
GSP-1	0.11 ± 0.01	0.08 ± 0.04	0.58 ± 0.06	0.53 ± 0.11
PCC-1	0.52 ± 0.05	0.42 ± 0.13	4.78 ± 0.41	4.71 ± 0.12

3.2. Analyze 10% USGS PCC-1 material to meet QC requirements. This material is probably the best characterized geostandard for H_2O^- and H_2O^+, and requires only 20 mg of sample per run.

4. Interferences

4.1. Any nonaqueous substances that volatilize below 1000° C may cause a positive interference in the cell, and if abundant can destroy the P_2O_5 coating on the cell. Soils and hydrocarbon-rich rocks (shales, marine muds, coals) should NOT be analyzed in this instrument.

5. Collection and Storage of Samples

5.1. No special collection and storage procedures are generally required. It is advisable not to heat the samples significantly or freeze dry them if meaningful H_2O^- results are desired. The accuracy, usefulness, and meaning of this measurement is a matter of continuing controversy among geoanalysts.

6. Apparatus

6.1. Moisture Analyzer. DuPont 903H. See Fig. 1.

6.2. Tantalum sample boats.

6.3. Molecular seive gas dryer.

6.4. High-purity nitrogen gas.

6.5. Nitrogen regulator with 5 psig output.

6.6. Analytical balance.

6.7. Capillary tubing.

7. Reagents

7.1. Sodium tungstate ($Na_2WO_4 \bullet 2H_2O$).

7.2. Distilled water (highest purity available).

8. Calibration and Standards

8.1. Use either water or a stoichiometrically hydrated salt. Draw water up in capillary tubing and directly weigh. Weigh hydrated salts and calculate their water content from their chemical formulas.

8.2. Process weighed quantities of the calibrating agent similarly to samples as described in Step 9.1. Run standards only once for 20 min at 150°C, and calculate the calibration factor as described in Step 11.1. Use 10-20 mg of sodium tungstate. Fire a 20-min blank at 150°C following the calibration run to determine the system blank counting rate at this temperature (typically less than 1.0 count/min).

9. Procedure

9.1. System startup.

9.1.1. Adjust nitrogen flow to 70-90 mL/min at 5 psig (35 kPa) by opening the main tank valve and the toggle switch on the regulator. Adjust the flow rate with the needle valve under the instrument cover (back right corner). Purge for 10 min.

9.1.2. Set instrument temperature to the maximum (10.0 on potentiometer), place the sample boat in the oven, replace the Teflon stopper, close the lid, and fire the instrument for 20 min. Record the counts and let cool to < 75°C.

9.1.3. With the temperature potentiometer set to 0.0 and time set to 10 min, depress the zero set switch. The count rate should be less than 0.1 count/s. Adjust the zero knob to yield this rate.

9.2. System calibration.

9.2.1. Weigh 10-20 mg of $Na_2WO_4 \bullet 2H_2O$ in the sample boat and record the exact weight.

9.2.2. Open system cover. Remove the Teflon stopper, quickly insert the sample boat, and replace the stopper. Minimize the system exposure to atmospheric air to reduce the blank.

9.2.3. Fire system for 20 min at 150°C. Record the total counts observed.

9.2.4. Remove the boat and replace the stopper, being careful to minimize system exposure to atmospheric air. Purge with dry nitrogen for 10 min.

9.2.5. Dispose of the contents of the boat. Reinsert the boat in the system and fire for 20 min at 150°C to determine the blank count rate.

9.2.6. Rerun the calibration standards at appropriate intervals during the day.

9.3. Sample analysis.

9.3.1. Weigh 10-100 mg of rock powder into a tantalum boat (use the same pre-fired boat as used for the calibration standard). If the approximate levels of H_2O^- and H_2O^+ are known, select a sample size that will approximate the water content of the standard, up to a maximum of 100 mg sample.

9.3.2. Open the system cover, remove the Teflon stopper, quickly the insert boat, and replace the stopper. Adjust nitrogen flow rate using the needle valve. Close the cover.

9.3.3. Set temperature potentiometer to 110°C and reset the counter display. Fire the system by setting the timer to 20 min. Record the contents of the counter display at the end of combustion.

9.3.4. Set temperature potentiometer to 1000°C and reset the counter display. Fire the system by setting the timer to 20 min. Record the contents of the counter display at the end of combustion.

9.3.5. After the system cools, remove the boat, empty its contents, reinsert the boat, and run a blank as in Steps 9.3.2 to 9.3.4.

10. Operation of Equipment

10.1. See Instruction Manual for 903 & 903H Moisture Evolution Analyzer.

11. Calculations

11.1. The calibration factor is determined from the following equation:

$$K = \frac{(0.1097)\ (W)\ (100)}{Sc - Bc}$$

where K = calibration factor,
W = weight of $Na_2WO_4 \bullet 2H_2O$ (mg),
Sc = standard counts, and
Bc = blank counts.

11.2. Unbound water (H_2O^-) is determined using the following equation:

$$\%H_2O^- = \frac{(K)[(\text{first sample counts}) - (\text{first blank counts})]}{\text{sample wt. (mg)}}$$

11.3. Bound water (H_2O^+) is determined using the following equation:

$$\%H_2O^+ = \frac{(K)[(\text{second sample counts}) - (\text{second blank counts})]}{\text{sample wt. (mg)}}$$

12. Source Materials

12.1. Analytical Instruments Division, DuPont Company, "Instruction Manual, 903 & 903H Moisture Evolution Analyzer," PN 902117-001, Rev. B, January 1982.

12.2. F. A. Keidel, "Determination of Water by Direct Amperometric Measurement," *Anal. Chem.* **31**, 2043-2048 (1959).

12.3. M. Cremer, H. N. Elsheimer, and E. E. Escher, "Microcoulometric Measurement of Water in Minerals," *Analytica Chimica Acta* **60**, 183-192 (1972).

12.4. R. L. Hassel, "Coulometric Determination of Moisture in Polymers," *American Laboratory* **8**, 33-37 (1976).

12.5. J. W. Pyper, "The Determination of Moisture in Solids: A Selected Review," *Analytica Chimica Acta* **170**, 159-175 (1985).

12.6. N. W. Bower, D. K. Kim, and E. S. Gladney, "Determination of Water in Nineteen USGS Geochemical Reference Standards using Coulometry and Neutron-capture Prompt Gamma-ray Spectroscopy," *Geostandards Newsletter*, **11**, 37-40 (1987).

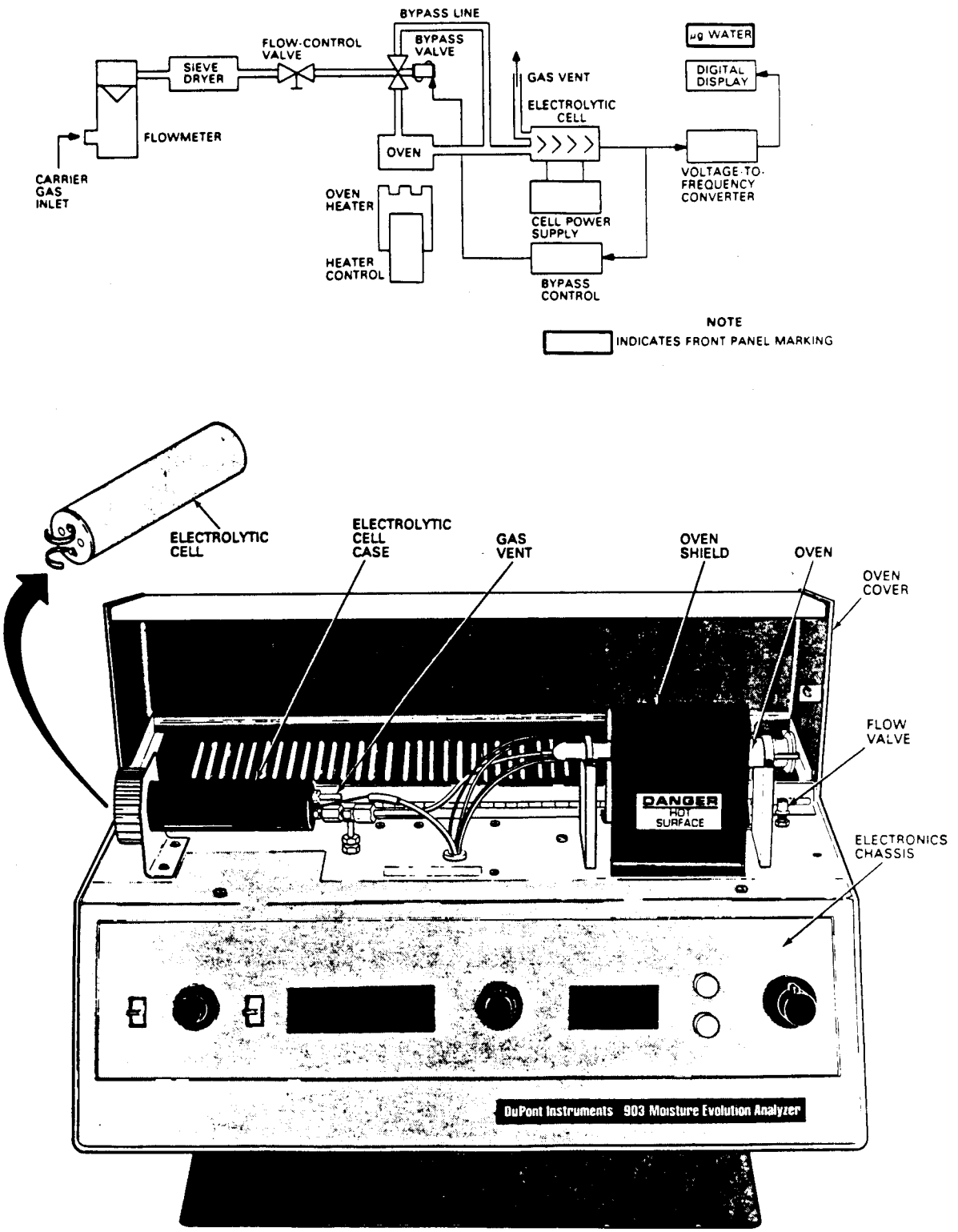

Fig. 1. Moisture analyzer.

POLYCHLORINATED BIPHENYLS (PCBs) IN OIL: SOLVENT EXTRACTION — GC/ECD

Analyte: Polychlorinated biphenyls	**Method No.:** EO400
Matrix: Oil	**Minimum Detection Limit:** 0.5 μg/g
Procedure: Hexane dilution followed by capillary gas chromatography with electron capture detection	
Effective Date: 08/01/91	**Author:** Jeff Roberts

SAFETY NOTE: Before beginning this procedure, read all of the Material Safety Data Sheets for the chemicals listed in Sec. 7. Read Sec. 4.3 of the EM-9 Safety Manual for information on personal protective clothing and equipment. Read Sec. 12 of this procedure and Source Material 13.2 for proper waste disposal practices.

1. Principle of Method

1.1. This method is applicable to the determination of the following analytes:

Analyte	Chemical Abstract Service Registry Number
Arochlor 1016	12674-11-2
Arochlor 1221	11104-28-2
Arochlor 1232	11141-16-5
Arochlor 1242	53469-21-9
Arochlor 1248	12672-29-6
Arochlor 1254	11097-69-1
Arochlor 1260	11096-82-5
Arochlor 1262	37324-23-5

1.2. The applicability of this method for the determination of analytes other than those listed above must be demonstrated by the analyst.

1.3. Actual detection limits may vary from that listed above because detection limits are highly dependent upon chromatographic conditions and the unique matrix of any given sample.

1.4. This method is restricted to use by or directly under the supervision of analysts experienced in the use of gas chromatography and the interpretation of chromatographic data.

1.5. Although this procedure is designed to be detailed and comprehensive, it must be understood that situations may arise that require deviation from this procedure. This is particularly true of interpretation of chromatographic data. These deviations will be made at the discretion of the analyst and his/her supervisor and must be thoroughly documented.

2. Summary of Method

2.1. A determined weight of sample is diluted with hexane to a known volume.

2.1.1. Sample cleanup and/or dilution is performed as necessary.

2.2. Samples are analyzed using a gas chromatograph and its associated data system.

2.3. Collected data is reviewed by a qualified analyst and Arochlors are identified and quantitated.

2.4. Applicable work is documented according to accepted laboratory operating procedures, and to satisfy all regulatory compliance requirements.

3. Sample Collection, Preservation and Storage

3.1. Samples are placed in separate, tightly capped glass bottles.

3.2. No preservation is required.

4. Interferences

4.1. Interference may be caused by contaminants in solvents, reagents, glassware, and other sample processing equipment that lead to either discrete artifacts or elevated baselines in gas chromatograms.

4.1.1. The use of high purity solvents and other chemicals will help to minimize interference problems.

4.1.2. Scrupulous cleaning of glassware and other equipment will help to minimize interference problems.

4.1.3. Strict adherence to standard laboratory practices will help minimize analyst-generated interferences.

4.2. Matrix interferences pose a significant problem in PCB analyses. Each sample may be cleaned up and/or diluted before analysis as necessary.

5. Safety

5.1. The toxicity and carcinogenicity of chemicals used in this method have not been precisely defined. Each chemical should be treated as a potential health hazard, and exposure minimized. Each person using this procedure must know where the Material Safety Data Sheets (MSDSs) are located and must have read them before use. The MSDS for each chemical used must be posted in a clearly marked envelope secured to the left wall inside the fume hood.

5.2. PCB products have been tentatively classified as known or suspected human or mammalian carcinogens. Pure standard materials and stock standard solutions of these compounds should be handled with gloves inside a fume hood.

5.3. Since the chemical composition of the samples is unknown, all samples must be considered potentially hazardous, and must be handled and extracted in a fume hood.

5.4. The gas chromatograph (GC) system must be vented into a hood.

5.5. All gas cylinders must be secured, fitted with the proper regulators and fittings, and located outside the building in a secured area.

5.6. Two waste containers must be available for the disposal of PCB-contaminated waste. One container must be for waste containing <500 ppm PCBs, and the other for waste containing >500 ppm PCBs. These containers will be properly labeled and will be disposed of by EM-7.

5.7. The laboratory will have an eye wash station that is flushed at least monthly for a minimum of 3 min. The date of the flushing and the name or initials of the person performing the flushing will be recorded.

5.8. The laboratory will have safety glasses available for all persons present in the laboratory, including guests. Safety glasses must be worn at all times by any personnel present beyond the leading edge of the fume hood, and by each person anywhere in the laboratory whenever operations requiring safety glasses are being performed by anyone in the laboratory.

5.9. The laboratory will have protective gloves, suitable for the chemicals used, available for employees. These are to be worn whenever the possibility of contact with samples or chemicals exist.

5.10. The laboratory will provide employees with protective aprons or lab coats that are suitable for the chemicals used.

5.11. No one is allowed to perform laboratory work unless at least one other person is present in the immediate vicinity who is aware that laboratory work is being performed.

6. Apparatus

6.1. Analytical balance: with accuracy to 0.0001 g.

6.2. Pasteur pipettes: 5-in., disposable.

6.3. Volumetric pipette: 10-mL with automatic dispenser.

6.4. Microliter syringes: assorted sizes.

6.5. Volumetric flasks: 1- to 25-mL with ground glass stoppers.

6.6. Sonicator bath.

6.7. Automatic liquid sampler (ALS) vials: 1-mL with Teflon lined crimp-seal caps.

6.8. Capping and uncapping device for ALS vials.

6.9. Gas chromatograph system, including:

- heated injection port,
- temperature programming capabilities,
- appropriate detection system,
- electronically controlled autosampler, and
- complete data system.

7. Reagents

7.1. Hexane.

7.2. Acetone.

7.3. Iso-octane: pesticide-grade or equivalent.

7.4. Stock standard solutions.

7.4.1. Prepare stock standard solutions within a concentration range of 20-50 (mg/L). This may be accomplished by diluting a certified solution or by accurately weighing the neat material and diluting to volume with hexane or iso-octane. If the purity of the neat material is assayed to be 96% or greater, the weight can be used without correction to calculate the concentration of the stock standard solution.

7.4.2. Transfer the stock standard solutions into Teflon-sealed screw-cap glass bottles and store at 4°C. These standards may be kept for up to one year.

7.5. Secondary (calibration, working) standards.

7.5.1. Prepare calibration standards at a minimum of five concentration levels for each parameter of interest by dilution of the stock standards with hexane. One of the concentrations should be at or near the method detection limit (MDL). The subsequent standards should define the working linear range of the GC. Add a surrogate, 2,4,5-tribromobiphenyl, to each of the secondary standards at a level of 260 μg/L.

7.5.2. Transfer the secondary standards to a Teflon-sealed screw-cap glass bottle and store at 4°C. Secondary standards may be kept for up to six months.

7.6. Surrogate Standard.

7.6.1. The surrogate compound in use is 2,4,5-tribromobiphenyl. The surrogate will be added to every sample run to monitor the performance of the extraction, cleanup, and analytical systems. The surrogate standard will be prepared at a level of 2.6 mg/L. The surrogate will be spiked in each matrix to give a final concentration of 260 mg/L.

8. Calibration

8.1. Gas chromatographic conditions are established in accordance with the requirements of the individual analyst. The following criteria must be met:

- sufficient resolution to allow accurate quantitation and identification;
- sufficient sensitivity to allow accurate quantitation to the MDL; and
- sufficient ability for the system to thermally clean itself to minimize sample carryover and/or elevated baselines.

8.2. External standard calibration procedure.

8.2.1. Analyze at least five concentrations for each Arochlor. Quantitate the individual Arochlors either by summing the total areas of the patterns or by specifying a minimum of four peaks per individual Arochlor pattern. The calibration range will be defined from at or near the method detection limit to the upper linear range of the detection system.

8.2.2. Calculate a calibration curve for each chosen peak or for each grouped pattern. Each curve will have a minimum correlation coefficient of 0.995 using a least squares regression. The calibration curves must be of the first-order linear type, with the origin forced through zero. Alternatively, the analyst can calculate the response factor for each peak or group at each level and determine the average response factors. If the percent relative standard deviation for each analyte is less than 20%, it

can be assumed the curve is linear over the calibration range with the origin at zero. The average response factor can then be used for quantitation.

8.3. Continuing calibration.

8.3.1. Verify the working calibration curve each working day by measuring one calibration standard for each Arochlor being quantitated.

8.3.2. The calculated value of the continuing calibration standard must be within 20% of the true value. If it does not meet this criterion, analyze a fresh aliquot of the standard. If the standard still does not meet this criterion, recalibrate the GC for that Arochlor.

9. Quality Control

9.1. Each analytical request must contain at least one quality control (QC) sample for every 10 samples or be batched with another set that contains a QC. In order to be considered a batch, all samples must be extracted and analyzed at the same time.

9.2. Quality control results must fall within specified limits. If they do not, the analyst must determine the cause of the problem and correct it whenever possible, reanalyzing associated samples as necessary. If it is not possible to reanalyze the samples, the reason for the QC failure and the inability to repeat the analysis must be documented on the report.

10. Procedure

10.1. Cleaning of glassware and equipment.

10.1.1. Glassware and other equipment that will come into direct contact with samples, standards, or reagents must be scrupulously clean in order to minimize contamination and interference problems.

10.1.2. Unused vials, glass bottles, caps, and lids need not be washed before use. All previously used glassware and equipment is cleaned immediately after use by thoroughly rinsing with hexane or with the last solvent used in the glassware. This rinse is followed by washing with hot water and detergent, rinsing thoroughly with tap water and distilled water, and then rinsing generously with hexane. Glassware is allowed to dry in the hood.

10.2. Sample dilution and cleanup.

10.2.1. Weigh out approximately 0.100 g of oil into a 1-mL volumetric test tube, making sure to record the exact weight. Dilute to 1 mL with hexane. Mix thoroughly.

10.2.2. From the solution prepared in 10.2.1, make a 1:10 dilution. This will constitute the undiluted sample needed to hit the 5.0 μg/g detection limit. Any further dilutions require the detection limit to be raised. Spike the sample with the surrogate solution so that the concentration of the surrogate is 260 μg/L.

10.2.3. If subsequent analysis shows significant matrix interferences, cleanup may be necessary. Accepted cleanup methods are treatment with concentrated sulfuric acid and/or running the sample through a Florisil column. Subject all associated quality control samples to whichever cleanup procedure is chosen.

10.3. Identification of PCBs.

10.3.1. Compare sample chromatograms with standard Arochlor chromatograms to determine which, if any, Arochlors are present in the sample. Determine which Arochlor or combination of Arochlors, and in what proportion, will produce a chromatogram most similar to that of the sample.

PCBs tend to degrade with age. This may cause the loss of certain peaks, particularly the earlier eluting peaks which represent the lower molecular weight compounds. This can make identification more difficult, particularly if the analyst is not aware of this phenomenon.

Because of the difficulties involved in the identification of these multicomponent residues, final judgements should not be left to an inexperienced analyst.

11. Quantitation

11.1. Separately quantitate each peak using the curve established earlier. Alternatively, the sum of the peak areas may be used to calculate the concentration of the compounds of interest.

11.2. Average the calculated values for each peak in a given Arochlor to give the extract concentration in μg/mL. Eliminate obvious outliers before averaging.

NOTE: If the calculated values for each peak appear to vary greatly, it may indicate that the Arochlor was incorrectly identified.

11.3. Multiply the resulting number by the volume of solvent used in the initial dilution (normally 1 mL). Divide by the initial weight of the oil. Adjust for additional dilution if necessary.

$$C = \frac{C_e \times V_s}{D \times W} ,$$

where C = concentration of analyte (μg/g),
C_e = extract concentration (μg/mL),
V_s = volume of solvent (mL),
D = dilution factor, and
W = weight of oil (g).

A sample calculation, assuming 1 mL initial volume, 0.1064 g initial weight, a dilution of 100 μL of extract to 1 mL total volume (noted as a 0.1 dilution), and a calculated concentration in the extract of 0.76 μg/mL is:

$$C = \frac{0.76\ \mu g/mL \times 1\ mL}{0.1 \times 0.1064\ g} = 71\ \mu g/g .$$

12. Proper Waste Disposal

12.1. General waste management.

12.1.1. Each analyst in the section must receive Waste Generator training from EM-8 within 90 days of the date of hire.

12.1.2. Wherever possible, minimize the generation of waste through reduction, reuse, or recycling. Wherever possible, segregate containers to reflect the nature of the hazardous waste and the eventual waste disposal methods. For example, chlorinated solvent wastes should be segregated from flammable, nonchlorinated solvents and >50-ppm contaminated waste. This is especially important in analysis areas where the waste generated is considered to be mixed waste.

12.1.3. Categorize the waste using an EM-8 Waste Profile Form.

12.1.4. Upon completion of the Waste Profile Form, dispose of the waste by completing a Waste Disposal Request Form from EM-7. Approximately 30 days is required for the disposal of waste after the completion of the listed forms.

12.2. Solid waste.

12.2.1. Accumulate solid hazardous wastes, such as contaminated paper towels, pipettes, spent syringes, and glass vials, in a covered plastic container lined with a plastic bag. Label the container with a hazardous waste label which identifies the hazard, type of material being stored (i.e., pipettes, paper towels, etc.), the accumulation start date, and the laboratory of origin.

12.2.2. Open the waste container only for the time necessary to add the waste.

12.3. Liquid waste.

12.3.1. Accumulate liquid wastes, such as spent samples and spent solvents that are not reuseable, in glass or steel containers appropriate for the type of sample being stored. For example, store caustic materials in glass containers and spent solvents that are not bound for recycling in metal containers.

12.3.2. Place all containers storing hazardous liquid materials within secondary containment. Label the container with a hazardous waste label which identifies the hazard, type of material being stored (i.e., pipettes, paper towels, etc.), the accumulation start date, and the laboratory of origin.

12.3.3. Open the waste container only for the time necessary to add the waste.

12.4. Unused samples.

12.4.1. Return unused environmental samples to the Sample Management section for disposal.

13. Source Materials

13.1. ASTM Method D4059-91, "Standard Test Method for Analysis of Polychlorinated Biphenyls in Insulating Liquids by Gas Chromatography," April 1991.

13.2. "Hazardous and Mixed Waste," Administrative Requirement 10-3, in *Environment, Safety, and Health Manual*, Los Alamos National Laboratory Manual, Chapter 1 (most recent edition).

POLYCHLORINATED BIPHENYLS (PCBs) IN SOIL: SOLVENT EXTRACTION — GC/ECD

Analyte: Polychlorinated biphenyls	**Method No.:** EO410
Matrix: Soil and miscellaneous solids	**Minimum Detection Limit:** 0.06 μg/g
Procedure: Hexane extraction by sonication followed by capillary gas chromatography with electron capture detection	
Effective Date: 08/01/91	**Author:** Jeff Roberts

SAFETY NOTE: Before beginning this procedure, read all of the Material Safety Data Sheets for the chemicals listed in Sec. 7. Read Sec. 4.3 of the EM-9 Safety Manual for information on personal protective clothing and equipment. Read Sec. 12 of this procedure and Source Material 13.2 for proper waste disposal practices.

1. Principle of Method

1.1. This method is applicable to the determination of the following analytes:

Analyte	Chemical Abstract Service Registry Number
Arochlor 1016	12674-11-2
Arochlor 1221	11104-28-2
Arochlor 1232	11141-16-5
Archolor 1242	53469-21-9
Arochlor 1248	12672-29-6
Archolor 1254	11097-69-1
Archolor 1260	11095-82-5
Archolor 1262	37324-23-5

1.2. The applicability of this method for the determination of analytes other than those listed above must be demonstrated by the analyst.

1.3. Actual detection limits may vary from that listed above because detection limits are highly dependent upon chromatographic conditions and the unique matrix of any given sample.

1.4. This method is restricted to use by or directly under the supervision of analysts experienced in the use of gas chromatography and the interpretation of chromatographic data.

1.5. Although this procedure is designed to be detailed and comprehensive, it must be understood that situations may arise that require deviation from this procedure. This is particularly true of interpretation of chromatographic data. These deviations will be made at the discretion of the analyst and his/her supervisor and must be thoroughly documented.

2. Summary of Method

2.1. Percent moisture of the soil samples is determined to allow for reporting on a dry weight basis.

2.2. Samples are extracted into hexane or acetone using sonication.

2.3. Sample cleanup and/or dilution is performed as necessary.

2.4. Samples are analyzed using a gas chromatograph and its associated data system.

2.5. Collected data is reviewed by a qualified analyst and Arochlors are identified and quantitated.

2.6. Applicable work is documented according to accepted laboratory operating procedures, and to satisfy all regulatory compliance requirements.

3. Sample Collection, Preservation and Storage

3.1. Soil samples are placed into clean glass bottles and sealed with Teflon-lined caps.

3.2. Samples are placed in a separate, sealed glass bottles.

3.3. No preservation is required if the samples are submitted within 2 h of collection; otherwise the samples must be kept at 4°C.

3.4. Samples are kept refrigerated at 4°C until extracted and analyzed.

4. Interferences

4.1. Interference may be caused by contaminants in solvents, reagents, glassware, and other sample processing equipment that lead to either discrete artifacts or elevated baselines in gas chromatograms.

4.1.1. The use of high purity solvents and other chemicals will help to minimize interference problems.

4.1.2. Scrupulous cleaning of glassware and other equipment will help to minimize interference problems.

4.1.3. Strict adherence to standard laboratory practices will help minimize analyst-generated interferences.

4.2. Matrix interferences pose a significant problem in PCB analyses. Each sample may be cleaned up and/or diluted before analysis as necessary.

5. Safety

5.1. The toxicity and carcinogenicity of chemicals used in this method have not been precisely defined. Each chemical should be treated as a potential health hazard, and exposure minimized. Each person using this procedure must know where the Material Safety Data Sheets (MSDSs) are located and must have read them before use. The MSDS for each chemical used must be posted in a clearly marked envelope secured to the left wall inside the fume hood.

5.2. PCB products have been tentatively classified as known or suspected human or mammalian carcinogens. Pure standard materials and stock standard solution of these compounds should be handled with gloves inside a fume hood.

5.3. Since the chemical composition of the samples is unknown, all samples must be considered potentially hazardous, and must be handled and extracted in a fume hood.

5.4. The gas chromatograph (GC) system must be vented into a hood.

5.5. All gas cylinders must be secured, fitted with the proper regulators and fittings, and located outside the building in a secured area.

5.6. Two waste containers must be available for the disposal of PCB contaminated waste. One container must be for waste containing <500 ppm PCBs, and the other for waste containing >500 ppm PCBs. These containers will be properly labeled and will be disposed of by EM-7.

5.7. The laboratory will have an eye wash station that is flushed at least monthly for a minimum of 3 min. The date of the flushing and the name or initials of the person performing the flushing will be recorded.

5.8. The laboratory will have safety glasses available for all persons present in the laboratory, including guests. Safety glasses must be worn at all times by any personnel present beyond the leading edge of the fume hood, and by each person anywhere in the laboratory whenever operations requiring safety glasses are being performed by anyone in the laboratory.

5.9. The laboratory will have protective gloves, suitable for the chemicals used, available for employees. These are to be worn whenever the possibility of contact with samples or chemicals exist.

5.10. The laboratory will provide employees with protective aprons or lab coats that are suitable for the chemicals used.

5.11. No one is allowed to perform laboratory work unless at least one other person is present in the immediate vicinity who is aware that laboratory work is being performed.

6. Apparatus

6.1. Analytical balance: with accuracy to 0.0001 g.

6.2. Pasteur pipettes: 5-in., disposable.

6.3. Volumetric pipette: 10-mL with automatic dispenser.

6.4. Microliter syringes: assorted sizes.

6.5. Volumetric flasks: 1- to 25-mL with ground glass stoppers.

6.6. Sonicator bath.

6.7. Automatic liquid sampler (ALS) vials: 1-mL with Teflon lined crimp-seal caps.

6.8. Capping and uncapping device for ALS vials.

6.9. Gas chromatograph system including:

- heated injection port,
- temperature programming capabilities,
- appropriate detection system,
- electronically controlled autosampler, and
- complete data system.

7. Reagents

7.1. Hexane.

7.2. Acetone.

7.3. Iso-octane: pesticide-grade or equivalent.

7.4. Stock standard solutions.

7.4.1. Prepare stock standard solutions within a concentration range of 20-50 (mg/L). This may be accomplished by diluting a certified solution or by accurately weighing the neat material and diluting to volume with hexane or iso-octane. If the purity of the neat material is assayed to be

96% or greater, the weight can be used without correction to calculate the concentration of the stock standard solution.

7.4.2. Transfer the stock standard solutions into Teflon-sealed screw-cap glass bottles and store at 4°C. These standards may be kept for up to one year.

7.5. Secondary (calibration, working) standards.

7.5.1. Prepare calibration standards at a minimum of five concentration levels for each parameter of interest by dilution of the stock standards with hexane. One of the concentrations should be at or near the method detection limit (MDL). The subsequent standards should define the working linear range of the GC add a surrogate, 2,4,5-tribromobiphenyl, to each of the secondary standards at a level of 260 μg/L.

7.5.2. Transfer the secondary standards to a Teflon-sealed screw-cap glass bottle and store at 4°C. Secondary standards may be kept for up to six months.

7.6. Surrogate standard.

7.6.1. The surrogate compound in use is 2,4,5-tribromobiphenyl. The surrogate will be added to every sample run to monitor the performance of the extraction, cleanup, and analytical system. The surrogate standard will be prepared at a level of 2.6 mg/L. The surrogate will be spiked in each matrix to give a final concentration of 260 mg/L.

8. Calibration

8.1. Gas chromatographic conditions are established in accordance with the requirements of the individual analyst. The following criteria must be met:

- sufficient resolution to allow accurate quantitation and identification;
- sufficient sensitivity to allow accurate quantitation to the MDL; and
- sufficient ability for the system to thermally clean itself to minimize sample carryover and/or elevated baselines.

8.2. External standard calibration procedure.

8.2.1. Analyze at least five concentrations for each Arochlor. Quantitate the individual Arochlors either by summing the total areas of the patterns or by specifying a minimum of four peaks per individual Arochlor pattern. The calibration range will be defined from at or near the method detection limit to the upper linear range of the detection system.

8.2.2. Calculate a calibration curve for each chosen peak or for each grouped pattern. Each curve will have a minimum correlation coefficient of 0.995 using a least squares regression. The calibration curves must be of the first-order linear type, with the origin forced through zero. Alternatively, the analyst can calculate the response factor for each peak or group at each level and determine the average response factors. If the percent relative standard deviation for each analyte is less than 20%, it can be assumed the curve is linear over the calibration range with the origin at zero. The average response factor can then be used for quantitation.

8.3. Continuing calibration.

8.3.1. Verify the working calibration curve each working day by measuring one calibration standard for each Arochlor being quantitated.

8.3.2. The calculated value of the continuing calibration standard must be within 20% of the true value. If it does not meet this criterion, analyze a fresh aliquot of the standard. If the standard still does not meet this criterion, recalibrate the GC for that Arochlor.

9. Quality Control

9.1. Each analytical request must contain at least one quality control (QC) sample for every ten samples or be batched with another set that contains a QC. In order to be considered a batch, all samples must be extracted and analyzed at the same time.

9.2. Quality control results must fall within specified limits. If they do not, the analyst must determine the cause of the problem and correct it whenever possible, reanalyzing associated samples as necessary. If it is not possible to reanalyze the samples, the reason for the QC failure and the inability to repeat the analysis must be documented on the report.

10. Procedure

10.1. Cleaning of glassware and equipment.

10.1.1. Glassware and other equipment that will come into direct contact with samples, standards, or reagents must be scrupulously clean in order to minimize contamination and interference problems.

10.1.2. Unused vials, glass bottles, caps, and lids need not be washed before use. All previously used glassware and equipment is cleaned immediately after use by thoroughly rinsing with hexane or with the last solvent used in the glassware. This rinse is followed by washing with hot water and detergent, rinsing thoroughly with tap water and distilled

water, and then rinsing generously with acetone. Glassware is allowed to dry in the hood, and then dried in a 150°C oven for 1 h.

10.2. Sample extraction.

10.2.1. Weigh two separate aliquots of the soil sample, recording the weight to 0.001 g. One aliquot should be approximately 10 g and will be used for the determination of percent moisture. The other aliquot should be approximately 8 g and will be used for PCB determination.

10.2.1.1. The percent moisture determination is made by weighing approximately 10 g (record exact weight) into an aluminum weighing boat. Allow the sample to dry overnight and reweigh. Divide the dry weight of the soil by the wet weight of the soil and multiply by 100 to determine the percent solids. Subtract this number from 100 to get the percent moisture.

10.2.2. The 8 g (wet weight) aliquot is placed in a 20 mL vial. Ten mL of 1:1 hexane/acetone is added.

10.2.3. Cap the bottle tightly and sonicate for 30 min. Remove the bottle from the sonicator bath and tighten the cap.

10.2.4. Spike the sample with an amount of surrogate solution that will give a concentration of the surrogate equal to 260 μg/L.

10.2.5. If subsequent analysis shows significant matrix interferences, cleanup may be necessary. Accepted cleanup methods are treatment with concentrated sulfuric acid and/or running the sample through a Florisil column. Subject all associated quality control samples to whichever cleanup procedure is chosen.

10.3. Identification of PCBs.

10.3.1. Compare sample chromatograms with standard Arochlor chromatograms to determine which, if any, Arochlors are present in the sample. Determine which Arochlor or combination of Arochlors, and in what proportion, will produce a chromatogram most similar to that of the sample.

PCBs tend to degrade with age. This may cause the loss of certain peaks, particularly the earlier eluting peaks which represent the lower molecular weight compounds. This can make identification more difficult, particularly if the analyst is not aware of this phenomenon.

Because of the difficulties involved in the identification of these multicomponent residues, final judgements should not be left to an inexperienced analyst.

11. Quantitation

11.1. Separately quantitate each peak using the curve established earlier. Alternatively, the sum of the peak areas may be used to calculate the concentration of the compounds of interest.

11.2. Average the calculated values for each peak in a given Arochlor to give the extract concentration in μg/mL. Eliminate obvious outliers before averaging.

NOTE: If the calculated values for each peak appear to vary greatly, it may indicate that the Arochlor was incorrectly identified.

11.3. Multiply the resulting number by the volume of solvent used in the extraction procedure (normally 10 mL). Divide by the initial wet weight and multiply by the percent solids. Adjust for dilution if necessary.

$$C = \frac{C_e \times V_s}{(D \times W) \times (1.0 - M)} ,$$

where C = concentration of analyte (μg/g),
C_e = extract concentration (μg/mL),
V_s = volume of solvent (mL),
D = dilution factor,
W = wet weight of soil (g), and
M = moisture content.

A sample calculation, assuming 10 mL extraction solvent and initial wet weight of 8.14 g, 11.3% moisture, a dilution of 10 μL of extract to 1 mL total volume (Noted as a 0.1 dilution) and a calculated concentration in extract of 0.76 μg/mL, is:

$$C = \frac{0.76\ \mu g/mL \times 10\ mL}{(0.1 \times 8.14\ g) \times (1.0 - 0.113)} = 8.3\ \mu g/g$$

12. Proper Waste Disposal Practices

12.1. General waste management.

12.1.1. Each analyst in the section must receive Waste Generator training from EM-8 within 90 days of the date of hire.

12.1.2. Wherever possible, minimize the generation of waste through reduction, reuse, or recycling. Wherever possible, segregate containers to reflect the nature of the hazardous waste and the eventual waste disposal methods. For example, chlorinated solvent wastes should be segregated from flammable, nonchlorinated solvents and >50-ppm contaminated waste. This is especially important in analysis areas where the waste generated is considered to be mixed waste.

12.1.3. Categorize the waste using an EM-8 Waste Profile Form.

12.1.4. Upon completion of the Waste Profile Form, dispose of the waste by completing a Waste Disposal Request Form from EM-7. Approximately 30 days is required for the disposal of waste after the completion of the listed forms.

12.2. Solid waste.

12.2.1. Accumulate solid hazardous wastes, such as contaminated paper towels, pipettes, spent syringes, and glass vials, in a covered plastic container lined with a plastic bag. Label the container with a hazardous waste label which identifies the hazard, type of material being stored (i.e., pipettes, paper towels, etc.), the accumulation start date, and the laboratory of origin.

12.2.2. Open the waste container only for the time necessary to add the waste.

12.3. Liquid waste.

12.3.1. Accumulate liquid wastes, such as spent samples and spent solvents that are not re-useable, in glass or steel containers appropriate for the type of sample being stored. For example, store caustic materials in glass containers and spent solvents that are not bound for recycling in metal containers.

12.3.2. Place all containers storing hazardous liquid materials within secondary containment. Label the container with a hazardous waste label which identifies the hazard, type of material being stored (i.e., pipettes, paper towels, etc.), the accumulation start date, and the laboratory of origin.

12.3.3. Open the waste container only for the time necessary to add the waste.

12.4. Unused samples.

12.4.1. Return unused environmental samples to the Sample Management section for disposal.

13. Source Materials

13.1. ASTM Method D3304-77, "Standard Test Method for Analysis of Environmental Materials for Polychlorinated Biphenyls," July 1977.

13.2. "Hazardous and Mixed Waste," Administrative Requirement 10-3, in *Environment, Safety, and Health Manual*, Los Alamos National Laboratory Manual, Chapter 1 (most recent edition).

POLYCHLORINATED BIPHENYLS (PCBs) IN SWIPES: SOLVENT EXTRACTION — GC/ECD

Analyte: Polychlorinated biphenyls	**Method No.:** EO420
Matrix: Gauze swipes	**Minimum Detection Limit:** 0.5 μg/sample
Procedure: Hexane extraction by sonication followed by capillary gas chromatography with electron capture detection	
Effective Date: 08/01/91	**Author:** Jeff Roberts

SAFETY NOTE: Before beginning this procedure, read all of the Material Safety Data Sheets for the chemicals listed in Sec. 7. Read Sec. 4.3 of the EM-9 Safety Manual for information on personal protective clothing and equipment. Read Sec. 12 of this procedure and Source Material 13.2 for proper waste disposal practices.

1. Principle of Method

1.1. This method is applicable to the determination of the following analytes:

Analyte	Chemical Abstract Service Registry Number
Arochlor 1016	12674-11-2
Arochlor 1221	11104-28-2
Arochlor 1232	11141-16-5
Arochlor 1242	53469-21-9
Arochlor 1248	12672-29-6
Arochlor 1254	11097-69-1
Arochlor 1260	11096-82-5
Arochlor 1262	37324-23-5

1.2. The applicability of this method for the determination of analytes other than those listed above must be demonstrated by the analyst.

1.3. Actual detection limits may vary from that listed above because detection limits are highly dependent upon chromatographic conditions and the unique matrix of any given sample.

1.4. This method is restricted to use by or directly under the supervision of analysts experienced in the use of gas chromatography and the interpretation of chromatographic data.

1.5. Although this procedure is designed to be detailed and comprehensive, it must be understood that situations may arise that require deviation from this procedure. This is particularly true of interpretation of chromatographic data. These deviations will be made at the discretion of the analyst and his/her supervisor and must be thoroughly documented.

2. Summary of Method

2.1. Samples are extracted into hexane using sonication.

2.2. Sample cleanup and/or dilution is performed as necessary.

2.3. Samples are analyzed using a gas chromatograph and its associated data system.

2.4. Collected data is reviewed by a qualified analyst and Arochlors are identified and quantitated.

2.5. Applicable work is documented according to accepted laboratory operating procedures, and to satisfy all regulatory compliance requirements.

3. Sample Collection, Preservation and Storage

3.1. Samples are collected by swiping a 100-cm^2 area with a sterile gauze pad moistened with hexane or cyclohexane.

3.2. Samples are placed in separate, sealed 20-mL glass bottles.

3.3. No preservation is required if the samples are submitted within 2 h of collection; otherwise the samples must be kept at 4°C.

3.4. Samples are kept refrigerated at 4°C until extracted and analyzed.

4. Interferences

4.1. Interference may be caused by contaminants in solvents, reagents, glassware, and other sample processing equipment that leads to either discrete artifacts or elevated baselines in gas chromatograms.

4.1.1. The use of high purity solvents and other chemicals will help to minimize interference problems.

4.1.2. Scrupulous cleaning of glassware and other equipment will also help to minimize interference problems.

4.1.3. Strict adherence to standard laboratory practices will help minimize analyst-generated interferences.

4.2. Matrix interferences pose a significant problem in PCB analyses. Each sample may be cleaned up and/or diluted before analysis as necessary.

5. Safety

5.1. The toxicity and carcinogenicity of chemicals used in this method have not been precisely defined. Each chemical should be treated as a potential health hazard, and exposure minimized. Each person using this procedure must know where the Material Safety Data Sheets (MSDSs) are located and must have read them before use. The MSDS for each chemical used must be posted in a clearly marked envelope secured to the left wall inside the fume hood.

5.2. PCB products have been tentatively classified as known or suspected human or mammalian carcinogens. Pure standard materials and stock standard solutions of these compounds should be handled with gloves inside a fume hood.

5.3. Since the chemical composition of the samples is unknown, all samples must be considered potentially hazardous and must be handled and extracted in a fume hood.

5.4. The gas chromatograph (GC) system must be vented into a hood.

5.5. All gas cylinders must be secured, fitted with the proper regulators and fittings, and located outside the building in a secured area.

5.6. Two waste containers must be available for the disposal of PCB contaminated waste. One container must be for waste containing <500 ppm PCBs, and the other for waste containing >500 ppm PCBs. These waste containers will be properly labeled and shall be disposed of by EM-7.

5.7. The laboratory will have an eye wash station that is flushed at least monthly for a minimum of 3 min. The date of the flushing and the name or initials of the person performing the flushing will be recorded.

5.8. The laboratory will have safety glasses available for all persons present in the laboratory, including guests. Safety glasses must be worn at all times by any personnel present beyond the leading edge of the fume hood and by each person anywhere in the laboratory whenever operations requiring safety glasses are being performed by anyone in the laboratory.

5.9. The laboratory will provide employees with protective aprons or lab coats and protective gloves that are suitable for the chemicals used. These are to be worn whenever the possibility of contact with samples or chemicals exist.

5.10. No one is allowed to perform laboratory work unless at least one other person is present in the immediate vicinity who is aware that laboratory work is being performed.

6. Apparatus

6.1. Gauze pads: 2 × 2 in.

6.2. Analytical balance: with accuracy to 0.0001 g.

6.3. Pasteur pipettes: 5-in., disposable.

6.4. Volumetric pipette: 10-mL with automatic dispenser.

6.5. Microliter syringes: assorted sizes.

6.6. Volumetric flasks: 1- to 25-mL with ground glass stoppers.

6.7. Sonicator bath.

6.8. Automatic liquid sampler (ALS) vials: 1-mL with Teflon lined crimp-seal caps.

6.9. Capping and uncapping device for ALS vials.

6.10. Gas chromatograph system, including:

- heated injection port,
- temperature programming capabilities,
- appropriate detection system,
- electronically controlled autosampler, and
- complete data system.

7. Reagents

7.1. Hexane: pesticide-grade or equivalent.

7.2. Acetone: pesticide-grade or equivalent.

7.3. Iso-octane: pesticide-grade or equivalent.

7.4. Stock standard solutions.

7.4.1. Prepare stock standard solutions within a concentration range of 20-50 mg/L. This may be accomplished by diluting a certified solution or by accurately weighing the neat material and diluting to volume with hexane or iso-octane. If the purity of the neat material is assayed to be 96% or greater, the weight can be used without correction to calculate the concentration of the stock standard solution.

7.4.2. Transfer the stock standard solutions into Teflon-sealed screw-cap glass bottles and store at 4°C. These standards may be kept for up to one year.

7.5. Secondary (calibration, working) standards.

7.5.1. Prepare calibration standards at a minimum of five concentration levels for each parameter of interest by dilution of the stock standards with hexane. One of the concentrations should be at or near the method detection limit (MDL). The subsequent standards should define the working linear range of the GC. Add a surrogate, 2,4,5-tribromobiphenyl, to each of the secondary standards at a level of 260 μg/L.

7.5.2. Transfer the secondary standards to a Teflon-sealed screw-cap glass bottle and store at 4°C. Secondary standards may be kept for up to six months.

7.6. Surrogate standard.

7.6.1. The surrogate compound used is 2,4,5-tribromobiphenyl. Add the surrogate to every sample run to monitor the performance of the extraction, cleanup, and analytical systems. Prepare the surrogate standard at a level of 2.6 mg/L. The surrogate will be spiked in each matrix to give a final concentration of 260 mg/L.

8. Calibration

8.1. Gas chromatographic conditions are established in accordance with the requirements of the individual analyst. The following criteria must be met:

- sufficient resolution to allow accurate quantitation and accurate identification;
- sufficient sensitivity to allow accurate quantitation to the MDL; and
- sufficient ability for the system to thermally clean itself to minimize sample carryover and/or elevated baselines.

8.2. External standard calibration procedure.

8.2.1. Analyze at least five concentrations for each Arochlor. Quantitate the individual Arochlors either by summing the total areas of the patterns or by specifying a minimum of four peaks per individual Arochlor pattern. The calibration range will be defined from at or near the method detection limit to the upper linear range of the detection system.

8.2.2. Calculate a calibration curve for each chosen peak or for each grouped pattern. Each curve will have a minimum correlation coefficient of

0.995 using a least squares regression. The calibration curves must be of the first-order linear type, with the origin forced through zero. Alternatively, the analyst can calculate the response factor for each peak or group at each level and determine the average response factors. If the percent relative standard deviation for each analyte is less than 20%, assume the curve is linear over the calibration range with the origin at zero. The average response factor can then be used for quantitation.

8.3. Continuing calibration.

8.3.1. Verify the working calibration curve each working day by measuring one calibration standard for each Arochlor being quantitated.

8.3.2. The calculated value of the continuing calibration standard must be within 20% of the true value. If it does not meet this criterion, analyze a fresh aliquot of the standard. If the standard still does not meet this criterion, recalibrate the GC for that Arochlor.

9. Quality Control

9.1. Each analytical request must contain at least one quality control (QC) sample for every 10 samples or be batched with another set that contains a QC. In order to be considered a batch, all samples must be extracted and analyzed at the same time.

9.2. Quality control results must fall within specified limits. If they do not, determine the cause of the problem and correct it whenever possible, reanalyzing the associated samples as necessary. If it is not possible to reanalyze the sample, document the reason for the QC failure and the inability to repeat the analysis on the report.

9.3. Run a swipe blank and a sample of the solvent used in the field with each request. Since it is the responsibility of the sampler to provide these to the laboratory, these blanks may not always be available.

10. Procedure

10.1. Cleaning of glassware and equipment.

10.1.1. Glassware and other equipment that will come into direct contact with samples, standards, or reagents must be scrupulously clean in order to minimize contamination and interference problems.

10.1.2. Unused vials, glass bottles, caps and lids need not be washed before use. All previously used glassware and equipment is cleaned immediately after use by thoroughly rinsing with hexane or with the last solvent used in the glassware. This rinse is followed by washing with hot water and

detergent, rinsing thoroughly with tap water and distilled water, and then rinsing generously with hexane. Glassware is allowed to dry in the hood.

10.2. Sample extraction.

10.2.1. Push the gauze down to the bottom of the bottle using a 5-in. Pasteur pipette. Mark the sample number on the lid with a waterproof pen.

10.2.2. Add 10 mL of hexane with a volumetric pipette, being careful not to touch the pipette tip with the gauze or bottle. (If contact is made, the pipette must be thoroughly rinsed with hexane before being used for additional samples).

10.2.3. Cap the bottle tightly and sonicate for 30 min. Remove the bottle from the sonicator bath and tighten the cap.

10.3. Spike the sample with an amount of surrogate solution that will give a surrogate concentration of 260 μg/L.

10.4. If subsequent analysis shows significant matrix interferences, cleanup may be necessary. Accepted cleanup methods are treatment with concentrated sulfuric acid and/or running the sample through a Florisil column. Subject all associated quality control samples to whichever cleanup procedure is chosen.

10.5. Identification of PCBs.

10.5.1. Compare sample chromatograms to standard Arochlor chromatograms to determine which, if any, Arochlors are present in the sample. Determine which Arochlor or combination of Arochlors, and in what proportion, will produce a chromatogram most similar to that of the sample.

PCBs tend to degrade with age. This may cause the loss of certain peaks, particularly the earlier eluting peaks which represent the lower molecular weight compounds. This can make identification more difficult, particularly if the analyst is not aware of this phenomenon.

Because of the difficulties involved in the identification of these multicomponent residues, final judgements should not be left to an inexperienced analyst.

11. Quantitation

11.1. Separately quantitate each peak using the curve established earlier. Alternatively, the sum of the peak areas may be used to calculate the concentration of the compounds of interest.

11.2. Average the calculated values for each peak in a given Arochlor to give the extract concentration in μg/mL. Eliminate obvious outliers before averaging.

NOTE: If the calculated values for each peak appear to vary greatly, it may indicate that the Arochlor was incorrectly identified.

11.3. Multiply the resulting number by the volume of solvent used in the extraction procedure (normally 10 mL). Adjust for dilution if necessary.

$$C = \frac{C_e \times V_s}{D} ,$$

where C = concentration of analyte (μg/sample),
C_e = extract concentration (μg/mL),
V_s = volume of solvent (mL), and
D = dilution factor.

A sample calculation, assuming 10 mL extraction solvent, a dilution of 100 μL of extract to 1 mL total volume (noted as a 0.1 dilution), and a calculated concentration in the extract of 0.76 μg/mL, gives an analyte concentration of 76 μg/sample:

$$C = \frac{0.76\ \mu g/mL \times 10\ mL}{0.1} = 76\ \mu g/sample$$

12. Proper Waste Disposal Practices

12.1. General waste management.

12.1.1. Each analyst in the section must receive Waste Generator training from EM-8 within 90 days of the date of hire.

12.1.2. Wherever possible, minimize the generation of waste through reduction, reuse, or recycling. Wherever possible, segregate containers to reflect the nature of the hazardous waste and the eventual waste disposal methods. For example, segregate chlorinated solvent wastes from flammable, nonchlorinated solvents and >50-ppm contaminated waste. This is especially important in analysis areas where the waste generated is considered to be mixed waste.

12.1.3. Categorize the waste using an EM-8 Waste Profile Form.

12.1.4. Upon completion of the Waste Profile Form, dispose of the waste by completing a Waste Disposal Request Form from EM-7. Approximately

30 days is required for the disposal of waste after the completion of the listed forms.

12.2. Solid waste.

12.2.1. Accumulate solid hazardous wastes, such as contaminated paper towels, pipettes, spent syringes, and glass vials, in a covered plastic container lined with a plastic bag. Label the container with a hazardous waste label which identifies the hazard, type of material being stored (i.e., pipettes, paper towels, etc.), the accumulation start date, and the laboratory of origin.

12.2.2. Open the waste container only for the time necessary to add the waste.

12.3. Liquid waste.

12.3.1. Accumulate liquid wastes, such as spent samples and spent solvents that are not reusable, in glass or steel containers appropriate for the type of sample being stored. For example, store caustic materials in glass containers and spent solvents that are not bound for recycling in metal containers.

12.3.2. Place all containers storing hazardous liquid materials within secondary containment. Label the container with a hazardous waste label which identifies the hazard, type of material being stored (i.e., pipettes, paper towels, etc.), the accumulation start date, and the laboratory of origin.

12.3.3. Open the waste container only for the time necessary to add the waste.

12.4. Unused samples.

12.4.1. Return unused sample to the Sample Management section for disposal.

13. Source Material

13.1. ASTM Method D4059-91, "Standard Test Method for Analysis of Polychlorinated Biphenyls in Insulating Liquids by Gas Chromatography," April 1991.

13.2. "Hazardous and Mixed Waste," Administrative Requirement 10-3, in *Environment, Safety, and Health Manual*, Los Alamos National Laboratory Manual, Chapter 1 (most recent edition).

POLYCHLORINATED BIPHENYLS (PCBs) IN WATER: SOLVENT EXTRACTION — GC/ECD

Analyte: Polychlorinated biphenyls	**Method No.:** EO430
Matrix: Water and miscellaneous liquids	**Minimum Detection Limit:** 0.5 μg/L
Procedure: Hexane extraction by sonication followed by capillary gas chromatography with electron capture detection	
Effective Date: 08/01/91	**Author:** Jeff Roberts

SAFETY NOTE: Before beginning this procedure, read all of the Material Safety Data Sheets for the chemicals listed in Sec. 7. Read Sec. 4.3 of the EM-9 Safety Manual for information on personal protective clothing and equipment. Read Sec. 12 of this procedure and Source Material 13.2 for proper waste disposal practices.

1. Principle of Method

1.1. This method is applicable to the determination of the following analytes:

Analyte	Chemical Abstract Service Registry Number
Arochlor 1016	12674-11-2
Arochlor 1221	11104-28-2
Arochlor 1232	11141-16-5
Arochlor 1242	53469-21-9
Arochlor 1248	12672-29-6
Arochlor 1254	11097-69-1
Arochlor 1260	11096-82-5
Arochlor 1262	37324-23-5

1.2. The applicability of this method for the determination of analytes other than those listed above must be demonstrated by the analyst.

1.3. Actual detection limits may vary from that listed above because detection limits are highly dependent upon chromatographic conditions and the unique matrix of any given sample.

1.4. This method is restricted to use by or directly under the supervision of analysts experienced in the use of gas chromatography and the interpretation of chromatographic data.

1.5. Although this procedure is designed to be detailed and comprehensive, it must be understood that situations may arise that require deviation from this procedure. This is particularly true of interpretation of chromatographic data. These deviations will be made at the discretion of the analyst and his/her supervisor and must be thoroughly documented.

2. Summary of Method

2.1. Samples are extracted into hexane using manual shakeout.

2.2. Sample cleanup and/or dilution is performed as necessary.

2.3. Samples are analyzed using a gas chromatograph and its associated data system.

2.4. Collected data is reviewed by a qualified analyst and Arochlors are identified and quantitated.

2.5. Applicable work is documented according to accepted laboratory operating procedures, and to satisfy all regulatory compliance requirements.

3. Sample Collection, Preservation and Storage

3.1. A 500 mL water sample is collected into a clean glass bottle and sealed with a Teflon lined lid. Samples are refrigerated without additional preservative.

3.2. Samples are placed in separate, sealed 500-mL glass bottles with a Teflon lined lid.

3.2. No preservation is required if the samples are submitted within 2 h of collection; otherwise the samples must be kept at 4°C.

3.3. Samples are kept refrigerated at 4°C until extracted and analyzed.

3.4. Samples must be extracted within 7 days of collection and the extracts must be analyzed within 40 days of extraction.

4. Interferences

4.1. Interference may be caused by contaminants in solvents, reagents, glassware, and other sample processing equipment that leads to either discrete artifacts or elevated baselines in gas chromatograms.

4.1.1. The use of high purity solvents and other chemicals will also help to minimize interference problems.

4.1.2. Scrupulous cleaning of glassware and other equipment will help to minimize interference problems.

4.1.3. Strict adherence to standard laboratory practices will help minimize analyst-generated interferences.

4.2. Matrix interferences pose a significant problem in PCB analyses. Each sample may be cleaned up and/or diluted before analysis as necessary.

5. Safety

5.1. The toxicity and carcinogenicity of chemicals used in this method have not been precisely defined. Each chemical should be treated as a potential health hazard, and exposure minimized. Each person using this procedure must know where the Material Safety Data Sheets (MSDSs) are located and must have read them before use. The MSDS for each chemical used must be posted in a clearly marked envelope secured to the left wall inside the fume hood.

5.2. PCB products have been tentatively classified as known or suspected human or mammalian carcinogens. Pure standard materials and stock standard solutions of these compounds should be handled with gloves inside a fume hood.

5.3. Since the chemical composition of the samples is unknown, all samples must be considered potentially hazardous and must be handled and extracted in a fume hood.

5.4. The gas chromatograph (GC) system must be vented into a hood.

5.5. All gas cylinders must be secured, fitted with the proper regulators and fittings, and located outside the building in a secured area.

5.6. Two waste containers must be available for the disposal of PCB contaminated waste. One container must be for waste containing <500-ppm PCBs, and the other for waste containing >500-ppm PCBs. These waste containers will be properly labeled and will be disposed of by EM-7.

5.7. The laboratory will have an eye wash station that is flushed at least monthly for a minimum of 3 min. The date of the flushing and the name or initials of the person performing the flushing will be recorded.

5.8. The laboratory will have safety glasses available for all persons present in the laboratory, including guests. Safety glasses must be worn at all times by any personnel present beyond the leading edge of the fume hood, and by each person anywhere in the laboratory whenever operations requiring safety glasses are being performed by anyone in the laboratory.

5.9. The laboratory will provide employees with protective aprons or lab coats and protective gloves that are suitable for the chemicals used. These are to be worn whenever the possibility of contact with samples or chemicals exist.

5.10. No one is allowed to perform laboratory work unless at least one other person is present in the immediate vicinity who is aware that laboratory work is being performed.

6. Apparatus

6.1. Analytical balance: with accuracy to 0.0001 g.

6.2. Pasteur pipettes: 5-in., disposable.

6.3. Volumetric pipette: 10-mL with automatic dispenser.

6.4. Microliter syringes: assorted sizes.

6.5. Volumetric flasks: 1- to 25-mL with ground glass stoppers.

6.6. Sonicator bath.

6.7. Automatic liquid sampler (ALS) vials: 1-mL with Teflon lined crimp-seal caps.

6.8. Capping and uncapping device for ALS vials.

6.9. Gas chromatograph system, including:

- heated injection port,
- temperature programming capabilities,
- appropriate detection system,
- electronically controlled autosampler, and
- complete data system.

7. Reagents

7.1. Hexane: pesticide-grade or equivalent.

7.2. Acetone: pesticide-grade or equivalent.

7.3. Iso-octane: pesticide-grade or equivalent.

7.4. Stock standard solutions.

7.4.1. Prepare stock standard solutions within a concentration range of 20-50 mg/L. This may be accomplished by diluting a certified solution or by accurately weighing the neat material and diluting to volume with hexane or iso-octane. If the purity of the neat material is assayed to be 96% or greater, the weight can be used without correction to calculate the concentration of the stock standard solution.

7.4.2. Transfer the stock standard solutions into Teflon-sealed screw-cap glass bottles and store at 4°C. These standards may be kept for up to one year.

7.5. Secondary (calibration, working) standards.

7.5.1. Prepare calibration standards at a minimum of five concentration levels for each parameter of interest by dilution of the stock standards with hexane. One of the concentrations should be at or near the method detection limit (MDL). The subsequent standards should define the working linear range of the GC. Add a surrogate, 2,4,5-tribromobiphenyl, to each of the secondary standards at a level of 260 μg/L.

7.5.2. Transfer the secondary standards to a Teflon-sealed screw-cap glass bottle and store at 4°C. Secondary standards may be kept for up to six months.

7.6. Surrogate standard.

7.6.1. The surrogate compound used is 2,4,5-tribromobiphenyl. Add the surrogate to every sample run to monitor the performance of the extraction, cleanup, and analytical systems. Prepare the surrogate standard at a level of 2.6 mg/L. The surrogate will be spiked in each matrix to give a final concentration of 260 mg/L.

8. Calibration

8.1. Gas chromatographic conditions are established in accordance with the requirements of the individual analyst. The following criteria must be met:

- sufficient resolution to allow accurate quantitation and accurate identification;
- sufficient sensitivity to allow accurate quantitation to the MDL; and
- sufficient ability for the system to thermally clean itself to minimize sample carryover and/or elevated baselines.

8.2. External standard calibration procedure.

8.2.1. Analyze at least five concentrations for each Arochlor. Quantitate the individual Arochlors either by summing the total areas of the patterns or by specifying a minimum of four peaks per individual Arochlor pattern. The calibration range will be defined from at or near the method detection limit to the upper linear range of the detection system.

8.2.2. Calculate a calibration curve for each chosen peak or for each grouped pattern. Each curve will have a minimum correlation coefficient of 0.995 using a least squares regression. The calibration curves must be of the first-order linear type, with the origin forced through zero. Alternatively, the analyst can calculate the response factor for each peak or group at each level and determine the average response factors. If the percent relative standard deviation for each analyte is less than 20%, assume the curve is linear over the calibration range with the origin at zero. The average response factor can then be used for quantitation.

8.3 Continuing calibration.

8.3.1. Verify the working calibration curve each working day by measuring of one calibration standard for each Arochlor being quantitated.

8.3.2. The calculated value of the continuing calibration standard must be within 15% of the true value. If it does not meet this criterion, analyze a fresh aliquot of the standard. If the standard still does not meet this criterion, recalibrate the GC for that Arochlor.

9. Quality Control

9.1. Each analytical request must contain at least one quality control (QC) sample for every 10 samples or be batched with another set that contains a QC. In order to be considered a batch, all samples must be extracted and analyzed at the same time.

9.2. Quality control results must fall within specified limits. If they do not, determine the cause of the problem and correct it whenever possible, reanalyzing associated samples as necessary. If it is not possible to reanalyze the samples, document the reason for the QC failure and the inability to repeat the analysis on the report.

9.3. A blank must be prepared and analyzed with each extraction batch. This is accomplished by taking a 500-mL aliquot of deionized water and processing it through the method in exactly the same manner as the samples and QCs.

10. Procedure

10.1. Cleaning of glassware and equipment.

10.1.1. Glassware and other equipment that will come into direct with samples, standards, or reagents must be scrupulously clean in order to minimize contamination and interference problems.

Unused vials, glass bottles, caps, and lids need not be washed before use. All previously used glassware and equipment is cleaned immediately after use by thoroughly rinsing with hexane or with the last solvent used in the glassware. This rinse is followed by washing with hot water and detergent, rinsing thoroughly with tap water and distilled water, and then rinsing generously with acetone. Glassware is allowed to dry in the hood and then dried in a 150°C oven for 1 h.

10.2. Sample extraction.

10.2.1. Measure 500 mL of sample in 1-L graduated cylinder. Transfer to a 1-L separatory funnel. Mark the sample number on the separatory funnel with a waterproof pen.

10.2.2. Add 5 mL of hexane to the water in the separatory funnel. Swirl gently for approximately 15 s before stoppering the funnel.

10.2.3. Stopper the funnel, invert, and open the stopcock quickly but carefully.

10.2.4. Close the stopcock, shake for 30 s, vent through the stopcock, and shake for an additional 2 min. Remove the stopper.

10.2.5. Allow the mixture to separate for 5-10 min. Draw off the aqueous (bottom) layer. Carefully place the hexane layer into a small vial labeled with request number, sample number, and date of extraction.

NOTE: At this point it is acceptable to have water, emulsion, and hexane in the vial.

10.2.6. Centrifuge the sample if necessary to separate the hexane layer.

10.3. Spike the sample with an amount of surrogate solution that will give a concentration of the surrogate equal to 260 μg/L.

10.4. If subsequent analysis shows significant matrix interferences, cleanup may be necessary. Accepted cleanup methods are treatment with concentrated sulfuric acid and/or running the sample through a Florisil column. Subject all associated quality control samples to whichever cleanup procedure is chosen.

10.5. Identification of PCBs.

10.5.1. Compare sample chromatograms with standard Arochlor chromatograms to determine which, if any, Arochlors are present in the sample. Determine which Arochlor or combination of Arochlors, and in what proportion, will produce a chromatogram most similar to that of the sample.

PCBs tend to degrade with age. This may cause the loss of certain peaks, particularly the earlier eluting peaks which represent the lower molecular weight compounds. This can make identification more difficult, particularly if the analyst is not aware of this phenomenon.

Because of the difficulties involved in the identification of these multicomponent residues, final judgments should not be left to an inexperienced analyst.

11. Quantitation

11.1. Separately quantitate each peak using the curve established earlier. Alternatively, the sum of the peak areas may be used to calculate the concentration of the compounds of interest.

11.2. Average the calculated values for each peak in a given Arochlor to give the extract concentration in μg/mL. Eliminate obvious outliers before averaging.

NOTE: If the calculated values for each peak appear to vary greatly, it may indicate that the Arochlor was incorrectly identified.

11.3. Multiply the resulting number by the volume of solvent used in the extraction procedure (normally 5 mL) and divide by the sample volume (normally 0.500 L). Adjust for dilution if necessary.

$$C = \frac{C_e \times V_s}{V \times D} ,$$

where C = concentration of analyte (μg/L),
C_e = concentration in extract (μg/mL),
V_s = volume of extraction solvent (mL),
V = sample volume (L),
D = dilution factor, and
0.1 = dilution.

A sample calculation, assuming an initial sample volume of 500 mL, 5 mL of extraction solvent, a dilution of 100 μL of extract to 1 mL total volume (a 0.1 dilution), and a calculated concentration in the extract of 0.76 μg/mL, gives an analyte concentration of 76 μg/sample:

$$C = \frac{0.76\ \mu g/mL \times 5\ mL}{0.500\ L \times 0.1} = 76\ \mu g/L$$

12. Proper Waste Disposal Practices

12.1. General waste management.

12.1.1. Each analyst in the section must receive Waste Generator training from EM-8 within 90 days of the date of hire.

12.1.2. Wherever possible, minimize the generation of waste through reduction, reuse, or recycling. Wherever possible, segregate containers to reflect the nature of the hazardous waste and the eventual waste disposal methods. For example, segregate chlorinated solvent wastes from flammable, nonchlorinated solvents and >50-ppm contaminated waste. This is especially important in analysis areas where the waste generated is considered to be mixed waste.

12.1.3. Categorize the waste using an EM-8 Waste Profile Form.

12.1.4. Upon completion of the Waste Profile Form, dispose of the waste by completing a Waste Disposal Request Form from EM-7. Approximately 30 days is required for the disposal of waste after the completion of the listed forms.

12.2. Solid waste.

12.2.1. Accumulate solid hazardous wastes, such as contaminated paper towels, pipettes, spent syringes, and glass vials, in a covered plastic container lined with a plastic bag. Label the container with a hazardous waste label which identifies the hazard, type of material being stored (i.e., pipettes, paper towels, etc.), the accumulation start date, and the laboratory of origin.

12.2.2. Open the waste container only for the time necessary to add the waste.

12.3. Liquid waste.

12.3.1. Accumulate liquid wastes, such as spent samples and spent solvents that are not reusable, in glass or steel containers appropriate for the type of sample being stored. For example, store caustic materials in glass containers and spent solvents that are not bound for recycling in metal containers.

12.3.2. Place all containers storing hazardous liquid materials within secondary containment. Label the container with a hazardous waste label which identifies the hazard, type of material being stored (i.e., pipettes, paper towels, etc.), the accumulation start date, and the laboratory of origin.

12.3.3. Open the waste container only for the time necessary to add the waste.

12.4. Unused samples.

12.4.1. Return unused sample to the Sample Management section for disposal.

13. Source Material

13.1. ASTM Method D3304-77, "Standard Test Method for Analysis of Environmental Materials for Polychlorinated Biphenyls," July 1977.

13.2. "Hazardous and Mixed Waste," Administrative Requirement 10-3, in *Environment, Safety, and Health Manual*, Los Alamos National Laboratory Manual, Chapter 1 (most recent edition).

SEMIVOLATILE ORGANICS IN SOLID MATRICES: SOLVENT EXTRACTION — GC/MS

Analytes: Base Neutral/Acid Extractables (BNAs)	**Method No.:** EO500
Matrix: Soil, sediment, and sludges	**Minimum Detection Limit:** 330.0-660.0 μg/kg nominal (matrix dependent)
Procedure: Extraction and concentration of analytes with an appropriate solvent followed by capillary column GC/MS analysis.	**Accuracy and Precision:** These parameters are analyte dependent and are greatly influenced by the nature of the matrix.
Effective Date: 10/01/90	**Authors:** Martin W. Koby Matthew Monagle

SAFETY NOTE: **Before beginning this procedure, read all of the Material Safety Data Sheets for the chemicals listed in Sec. 8. Read Sec. 4.3 of the EM-9 Safety Manual for information on personal protective clothing and equipment. Read Sec. 17 of this procedure and Source Material 18.4 for proper waste disposal practices.**

1. Principle of Method

1.1. Analytes are extracted from various matrices with methylene chloride. Extracts are then concentrated to a small final volume (typically 1.0 mL), cleaned by alumina and/or gel permeation chromatography, and analyzed by gas chromatography/mass spectrometry. The mass spectrometer is operated in a scanning, electron impact (EI) ionization mode. The gas chromatograph is temperature programmed to effectively separate the wide range of analytes.

Analytes from a wide variety of compound classes can be determined using this method. Table X lists the compounds in the current Hazardous Substance List which are analyzed on a routine basis. Table XI contains the Appendix 9 list of compounds that are analyzed on a non-routine basis. Table XII is a list of compounds that could be incorporated into an analysis if necessary. (Tables IX-XII are found at the end of this procedure.)

1.2. Qualitative analysis is performed by comparing retention time and mass spectral data of unknowns to those of a standard mix for which the analytical system has been calibrated. USEPA-defined criteria (Source Material 18.2) are used to establish the validity of a compound identity.

1.3. Quantitation is achieved using the internal standard technique. Once the identity of a compound is determined, quantitation is based on the integrated abundance of a characteristic ion for that compound. This value is compared to the characteristic ion area of the internal standard nearest the retention time of the compound such that a ratio between the two can be determined. Additional factors taken into account include the response factor of the compound being measured, the final volume of extract, and the sample aliquot extracted.

2. Sensitivity

2.1. Practical limits of quantitation are generally in the range of 330.0 μg/Kg to 660 μg/Kg for low-level solid matrices. Matrices that are relatively free of interferences have lower attainable limits of detection than those having large amounts of coextractible material, such as drum waste. Medium-level extracts have a nominal detection limit of 20,000 μg/kg.

2.2. The values in Step 2.1 are analyte dependent and can be greatly influenced by matrix constituents, sample inlet conditions, and general analyte reactivity. Response factors for standards tend to show linearity to 180 μg/mL; however, specific compounds may show decreasing chromatographic performance or detector saturation at this concentration.

3. Accuracy and Precision

3.1. Based upon surrogate and spike data, analyte recoveries are typically in the 60-110% range. Recoveries can be expected to vary depending upon the analyte and matrix complexity.

3.2. Long-range precision data is based upon matrix spike and spike duplicate percent recovery and the relative percent difference between the two. Refer to Section 15, Table VIII.

4. Interferences

4.1. Any material that will cause an increase in background signal or elevated baseline or result in discrete chromatographic peaks which are not attributable to target compounds may interfere with the identification and quantitation of a given analyte. Examples are environmental matrices containing high concentrations of humic material, oils, hydrocarbons, lipids, sulfur, or polar material such as alcohols and carboxylic acids.

4.2. Excessive particulate matter in water, extreme alkalinity or acidity, reactive material, intense light, and high temperature can negatively effect analyte recovery.

5. Sample Collection and Storage

5.1. All sampling equipment should be free of introduced contaminants.

5.2. Soil or sediment samples are typically collected in amber or clear glass wide-mouth bottles. Caps should have Teflon liners; however, aluminum foil can be substituted for Teflon if necessary. Excessive headspace should be avoided.

5.3. Samples should be stored, unpreserved, in a refrigerator at 4°C until extraction is initiated.

6. Sample holding times

6.1. Soil or sediment samples must be extracted within 14 d of receipt.

6.2. Sample extracts must be analyzed within 40 d of extraction.

7. Apparatus

7.1. Gas chromatograph/mass spectrometer: GC capable of temperature programming from 25-300°C. The mass spectrometer, using electron impact ionization, must be capable of scanning a mass range of 35-500 AMU in 1.0 s or less.

7.2. Data system: capable of initiating and controlling data acquisition, storing spectral and chromatographic data, and performing mass spectral library searches.

7.3. Chromatographic column: 5% methyl phenyl silicone, 30-m x 0.25-mm-i.d. x 0.5-micron film thickness, J & W DB-5.625 or equivalent.

7.4. Semiautomated gel permeation chromatograph (GPC): capable of uninterrupted multiextract processing. GPC Autorep model 1002B, Analytical Biochemistry Laboratories, Inc. The column packing material used for this application is 70 g of 3% crosslinked styrene divinyl benzene (SX-3 BioBeads, Biorad Corp.).

7.5. Electronic balance: capable of measurement to three decimal places.

7.6. Ultrasonic processor: 300 watt, capable of operating in a pulsed or continuous mode.

7.7. Refrigerated recirculating heat exchanger: Neslab Coolflow CFT-33 or equivalent.

7.8. Ultracentrifuge: with rotor capable of holding six 250-mL bottles.

7.9. Nitrogen evaporation apparatus with multiple sample capacity: Organomation N-EVAP, Model 111 or equivalent.

7.10. Concentric ring steam table: 4- or 8-hole, Boekel, Inc. or equivalent.

7.11. Automated evaporative concentrator: Zymark Turbovap or equivalent may be substituted for items 7.9 and 7.10.

7.12. Kuderna-Danish concentrators: consisting of 500-mL flask, 15-mL calibrated receiver tube, and three-ball Snyder column.

7.13. Condensers: glass, 300-mm jacket, Allihn bulb type with 55/50 ground glass joint.

7.14. Soxhlet extractors: with 55/50 and 24/40 joints and coarse frit glass extraction thimbles. Typically rated at 8 cycles/h. Fiber thimbles may be substituted for glass in instances where samples are characterized as having a high radiation hazard.

7.15. Glass filtering funnels.

7.16. Centrifuge bottles: 250-mL, heavy wall.

7.17. Round bottom flasks: 500-mL, glass, 24/40 joint.

7.18. Beakers: glass, 100-, 150-, 250-, 400-, and 600-mL capacity.

7.19. Glass vials: 1.8-mL crimp cap, 1.8-, 7-, 10-, 12-, 15-, and 40-mL capacity screw cap with septa.

7.20. Volumetric glassware: 1-, 2-, 5-, 10-, 25-, 50-, 100-, and 250-mL with stoppers.

7.21. Disposable glass pipettes: 1-, 2-, 5-, and 10-mL.

7.22. Adjustable low-volume pipettors: 10- and 250-μL capacity with disposable capillary tips. SMI brand or equivalent.

7.23. Syringes: glass, gas-tight, 10-, 25-, 50-, and 100-μL volume.

7.24. Heating mantles: 500-mL, Glas-col STM or equivalent.

7.25. Teflon boiling stones.

7.26. Glass wool.

7.27. Jack stands: 6 in. by 6 in.

7.28. Aluminum foil.

7.29. Oven: capable of being heated to 500°C.

7.30. Muffle furnace: capable of being heated to 900°C.

8. Reagents

8.1. Methylene chloride (Baker Resi-analyzed).

8.2. Acetone (Baker Resi-analyzed).

8.3. Methanol (HPLC-grade).

8.4. Hexane (pesticide-grade).

8.5. Reagent water (deionized). Charcoal filtered and/or distilled water demonstrated to be free from interferences.

8.6. Sodium sulfate (granular). Muffle overnight at 400°C. Alternatively, it can be Soxhlet-extracted with methylene chloride before use. Store in a covered container.

8.7. Sulfuric acid (diluted 1:1 with reagent water). While mixing, slowly add 500 mL of concentrated sulfuric acid to 400 mL of reagent water in a 1-L volumetric flask. Allow to cool to room temperature and dilute to volume. Store in a properly labeled covered container.

8.8. Sodium sulfate (10 N). Slowly add 40.0 g granular Na_2SO_4 to reagent water in a 100-mL volumetric flask while mixing. Allow to cool and dilute to volume. Store in a properly labeled covered container.

8.9. Alumina (Woelm Neutral Super I, ICN brand). Muffle for 4 h at 140°C and store in a desiccator before use. Deactivate to activity level III by adding 7% water (vol/wt) and shaking on a wrist action shaker for 2 h.

8.10. Bio Beads (SX-3). Soak 70 g in methylene chloride overnight to facilitate swelling of the resin. Pack the column, establish flow and pressure, and allow to equilibrate with CH_2Cl_2 for 24 h before calibration and use.

9. Standards

9.1. All analytical standards are refrigerated at -20°C. Working standards typically have a shelf life of three months. Stock standards are considered usable for at least six months or until degradation becomes apparent.

The analytical standards listed in the following sections are specified by EPA protocol to be used in the analysis of base/neutral acid extractables. They are readily available from any number of chemical suppliers as neat standards or as stock solutions. Currently, we use standard mixes formulated by Ultra Scientific, Inc.

9.2. Surrogate compounds. The surrogates closely resemble target compounds chemically but are not normally encountered in nature. Before extraction, each sample is fortified with a known concentration of surrogate mix. Evaluating surrogate recoveries gives a measure of the method efficiency relative to any given matrix.

9.2.1. Base/neutral surrogate standard mix (1000 μg/mL in CH_2Cl_2). This formulation contains the following compounds:

Nitrobenzene-d_5
2-Fluorobiphenyl
Terphenyl-d_{14}

9.2.2. Acid surrogate standard mix (2000 μg/mL in methanol). This formulation contains the following compounds:

2-Fluorophenol
Phenol-d_5
2,4,6-Tribromophenol

9.2.3. BNA surrogate working standards are prepared by diluting each mix 1:20 with methanol in the same volumetric flask. This results in a final concentration of 50 or 100 ppm of base neutral/acid components, respectively.

9.3. Matrix spike compounds. These compounds are used to document analytical precision and accuracy, the objective being to identify trends in method performance on both a long- and short-term basis. Known concentrations of spike material are added to duplicate representative samples before extraction. Matrix spike and matrix spike duplicate data is generated once for every 20 samples extracted.

9.3.1. Base/neutral matrix spike solution (1000 μg/mL in CH_2Cl_2). This formulation contains the following components:

Acenaphthene
1,4-Dichlorobenzene
2,4-Dinitrophenol
N-Nitroso-di-n-propylamine
Pyrene
1,2,4-Trichlorobenzene

9.3.2. Acid matrix spike solution (2000 μg/mL in methanol). This formulation contains the following components:

4-Chloro-3-methylphenol
2-Chlorophenol
4-Nitrophenol
Pentachlorophenol
Phenol

9.3.3. Working standards of matrix spiking solutions are made by diluting each stock 1:20 with methanol in the same volumetric flask. Final concentrations are 50/100 ppm base neutral/acid respectively.

9.4. Internal Standards (ISs). The IS compounds are added to extracts immediately before instrumental analysis. They are used to facilitate both qualitative and quantitative analysis. Extracts are spiked with an IS mix such that a final concentration of 40 μg/mL of each component is obtained.

9.4.1. Internal standard mix (4000 μg/mL or 2000 μg/mL in CH_2Cl_2, depending on the supplier). This mix is used undiluted and is spiked into the samples, blanks, and all calibration standards so that a final concentration of 40 μg/mL is obtained. Internal standards are:

1,4-Dichlorobenzene-d_4
Naphthalene-d_8
Acenaphthene-d_{10}
Phenanthrene-d_{10}
Chrysene-d_{12}
Perylene-d_{12}

9.5. Decafluorotriphenylphosphine (DFTPP). DFTPP is used to verify the performance of the mass spectrometer. The DFTPP spectrum must meet established EPA ion abundance criteria before calibrating the instrument and analyzing samples. The working Standard DFTPP concentration is 50 μg/mL in CH_2Cl_2.

9.6. Initial calibration standards. These standards contain all target compounds of interest at five different concentrations. Typically, these are 20.0, 50.0, 80.0, 120.0 and 160.0 μg/mL of each analyte. The standards are made by volumetric dilution of 2000-μg/mL stock standards with methylene chloride. Appropriate amounts of internal standards and surrogate are included.

9.7. Daily calibration standards. These standards contain 50.0 μg/mL of all target compounds of interest in methylene chloride. They are used to demonstrate instrument stability in terms of analyte response (response factor) and relative retention time.

9.8. Alumina equivalency standard. This standard is prepared in the same manner as the BNA surrogate working standard except 50:50 hexane/acetone is used as the solvent. It is used to evaluate the efficiency of the alumina column cleanup when used.

9.9. Table I is a list of all working standard mixes.

TABLE I. BASE/NEUTRAL ACID WORKING STANDARDS

Standard name	Components	Conc. (μg/mL)	Solvent
BNA surrogate mix	2-Fluorophenol	100.0	Methanol
	Phenol-d_5	100.0	
	Nitrobenzene-d_8	50.0	
	2-Fluorobiphenyl	50.0	
	2,4,6-Tribromophenol	100.0	
	Terphenyl-d_{14}	50.0	
BNA matrix spike mix	Phenol	100.0	Methanol
	2-Chlorophenol	100.0	
	1,4-Dichlorobenzene	50.0	
	N-Nitroso-di-n-propylamine	50.0	
	1,2,4-Trichlorobenzene	50.0	
	4-Chloro-3-methylphenol	100.0	
	Acenaphthene	50.0	
	4-Nitrophenol	100.0	
	2,4-Dinitrotoluene	50.0	
	Pentachlorophenol	100.0	
	Pyrene	50.0	
Internal standard mix	1,4-Dichlorobenzene-d_4	40.0	Methylene chloride

TABLE I. (cont)

Standard name	Components	Conc. (μg/mL)	Solvent
	Naphthalene-d_8	40.0	
	Acenaphthene-d_{10}	40.0	
	Phenanthrene-d_{10}	40.0	
	Chrysene-d_{12}	40.0	
	Perylene-d_{12}	40.0	
DFTPP	Decafluorotriphenylphosphine	50.0	Methylene chloride
Initial calibration mix	See Tables XI and XII	20.0 50.0 80.0 120.0 160.0	Methylene chloride
Daily calibration mix	See Tables XI and XII	50.0	Methylene chloride
Alumina equivalency standard	See BNA surrogate mix	50/100	50% Hexane/ acetone

10. Sample Extraction.

10.1. Extracting low-level BNAs from soils, sediments, and other solid matrices using soxhlet extractor.

CAUTION: These procedures use large quantities of methylene chloride, a suspected carcinogen. Wear appropriate personal protective equipment, use safe work practices, and perform all procedures in a fume hood.

10.1.1. All glassware should be rinsed with methylene chloride and air dried before use. Assemble Soxhlet extractors, including two pads of glass

wool in the thimbles, and clean by refluxing several hours. Discard the methylene chloride contained in the round bottom flasks and replace with 300 mL of fresh methylene chloride and several Teflon boiling stones.

10.1.2. If any standing water is present in the sample container, decant it before homogenizing the sample. If the quantity of water is sufficient it may be treated as a separate sample, depending upon the needs of the customer.

10.1.3. Avoiding rocks >2-mm-diam, grass, twigs, and other interfering material, weigh 30.0 g of homogenized sample into a 150-mL beaker. Add 60.0 g of granular sodium sulfate and mix thoroughly, using a stainless-steel spatula. If the sample has significant moisture, additional Na_2SO_4 should be added. The sample should flow readily and have a grainy texture when sufficient sodium sulfate has been added.

10.1.4. If the sample has an oily appearance or strong organic/petroleum odor, extract a reduced aliquot. This will result in higher reported limits of quantitation.

10.1.5. If the analyte concentrations are to be reported on a dry-weight basis, determine the percent moisture. Tare an aluminum weigh boat or pan, add approximately 10 g of moist soil, weigh, and dry overnight at 105°C. Reweigh the sample and calculate the percent moisture from the weight loss upon drying.

10.1.6. Transfer the sample and Na_2SO_4 mixture to the extraction thimble, leaving one of the glass wool pads between the sample and thimble frit. Place the other glass wool pad on top of the sample after the necessary surrogate and spike standards have been added.

10.1.7. Fortify all samples, blanks, and matrix spikes with 1.0 mL BNA surrogate standard mix by adding it directly to the sample surface. Similarly add 1.0 mL of BNA spike mix to the matrix spike and matrix spike duplicate samples.

10.1.8. Attach condensers to the Soxhlet extractors, turn on the heating mantles, and reflux for 18 h. Ensure that extractors are siphoning properly and that no leaks exist.

10.1.9. When extraction is complete, allow the round bottom flask to cool. Tilting the extractor will allow methylene chloride remaining in the Soxhlet to siphon into the round bottom flask.

10.1.10. Remove the round bottom flask, cover, and refrigerate until the extract can be concentrated as described in Section 11.

10.2. Extracting low-level BNAs from soils, sediments, and other solid matrices using a high-energy ultrasonic processor.

This is the preferred alternative to the preceding method, Section 10.1, when radioactivity is not a concern.

10.2.1. Rinse all glassware with solvent before use.

10.2.2. Decant any standing water from the sample before homogenizing. If sufficient water is present it may be saved and treated as a separate sample, otherwise discard it. Weigh 30.0 g of sample into a 250-mL heavy-wall centrifuge bottle. Add 60 g of sodium sulfate and mix thoroughly, using a stainless-steel spatula. If the sample forms a hard crust, additional Na_2SO_4 should be added. The sample will have a grainy texture and flow easily when sufficient Na_2SO_4 has been added. Avoid stones with a diameter >2 mm, twigs, grass, and any other interfering material when taking an aliquot.

10.2.3. Add 100 mL of methylene chloride to each centrifuge bottle.

10.2.4. Fortify each sample, blank, and matrix spike sample with 1 mL of BNA surrogate mix using a disposable pipet. Similarly add BNA matrix spiking solution where necessary. Ensure that the pipette tip is below the surface of the solvent and stir thoroughly.

10.2.5. Tune the ultrasonic processor according to the maufacturer's specifications.

10.2.6. Sonicate each sample using a 50% duty cycle, pulsed mode, for 2 min.

10.2.7. Centrifuge each sample and decant the solvent into a 500-mL Erlenmeyer flask or a 400-mL beaker.

10.2.8. Repeat the sonication and centrifugation steps two more times using additional 100-mL aliquots of methylene chloride. Combine the extracts and record the approximate volumes of solvent recovered.

10.2.9. Cover extracts and refrigerate until ready to proceed with concentration, Section 11.

10.3. Extracting low-level BNAs and organochlorine pesticides from soil/sediment.

EPA Contract Laboratory Program (EPA-CLP) semivolatile analytical protocol allows for the simultaneous extraction of base/neutral acid extractables, PCBs,

and organochlorine pesticides. Once the extract has been concentrated to 10 mL it is split and further manipulated to enable analysis for organochlorine pesticides and PCBs by GC/ECD and GC/MS.

10.3.1. All glassware should be rinsed with solvent before use.

10.3.2. Decant any standing water from the sample before homogenizing. If sufficient water is present it may be saved and treated as a separate sample, otherwise discard it. Weigh 30.0 g of sample into a 250-mL heavy-wall centrifuge bottle. Add 60 g of granular sodium sulfate and mix thoroughly using a stainless-steel spatula. If the sample forms a hard crust additional Na_2SO_4 should be added. The sample will have a grainy texture and flow easily when sufficient Na_2SO_4 has been added. Stones with a diameter >2 mm, twigs, grass, and any other interfering material should be avoided when taking a sample aliquot.

10.3.3. Add 100 mL of 50:50 acetone in methylene chloride to each centrifuge bottle.

10.3.4. Fortify each sample, blank, and matrix spike sample with 1 mL BNA surrogate mix,using a disposable pipet. Add BNA matrix spiking solution where necessary. Ensure that the pipet tip is below the surface of the solvent and stir thoroughly.

10.3.5. In an identical manner, add pesticide surrogate and spike mixes where appropriate.

10.3.6. Tune the ultrasonic processor according to the manufacturer's specifications.

10.3.7. Sonicate each sample using a 50% duty cycle, pulsed mode, for 2 min.

10.3.8. Centrifuge each sample and decant the solvent into a 500-mL Erlenmeyer flask or a 400-mL beaker.

10.3.9. Repeat the sonication and centrifugation steps two more times using additional 100-mL portions of 50:50 acetone in methylene chloride. Combine the extracts and record approximate volumes of solvent recovered.

10.3.10. Cover extracts and refrigerate until ready to proceed with ample concentration, Section 11.

10.4. Extracting medium-level soil/solid screen using a high energy ultrasonic processor.

This method can be used when higher concentrations of analytes are present or to characterize the extractable components within a sample. Detection limits are generally in the 20,000 μg/kg range.

10.4.1. Rinse all glassware with solvent before use.

10.4.2. Decant any standing water from the sample before homogenizing. If sufficient water is present it may be saved and treated as a separate sample, otherwise discard it. Weigh 1.0 g of sample into a 40-mL VOA vial. Add 2.0 g of sodium sulfate and mix thoroughly, using a stainless-steel spatula. If the sample forms a hard crust additional Na_2SO_4 should be added. The sample will have a grainy texture and flow easily when sufficient Na_2SO_4 has been added. Stones with a diameter >2 mm, twigs, grass, and any other interfering material should be avoided when taking a sample aliquot.

10.4.3. Fortify each sample, blank, and matrix spike sample with 1 mL of BNA surrogate mix, using a disposable pipette. Similarly add 1 mL of BNA matrix spiking solution where necessary.

10.4.4. Add 9.0 mL of methylene chloride to all sample vials except the matrix spikes, which receive 8.0 mL. The total volume of solvent in each vial should equal 10.0 mL.

10.4.5. Tune the ultrasonic processor according to the maufacturer's specifications.

10.4.6. Sonicate each sample for 1 min using a continuous operation mode.

10.4.7. Loosely pack 3 cm of glass wool into a Pasteur pipette. Filter the extract through the glass wool and collect 5 mL in a graduated receiver tube. Save the unfiltered portion for further analysis.

10.4.8. Using nitrogen evaporation techniques, concentrate the filtered extract to 1.0 mL if possible. Transfer to a 1.8-mL screw cap vial and analyze by GC/MS as directed in Section 14.

11. Concentration of Extracts from Low Level Soil Matrices

Traditional Kuderna-Danish (KD) and nitrogen blowdown techniques.

11.1. Rinse all glassware with solvent before use.

11.2. Attach a 15-mL receiver tube to a 500-mL KD flask and add one Teflon boiling stone.

11.3. Place a small pad of glass wool in the bottom of a glass funnel (Kimax 58 or equivalent). Add granular sodium sulfate until the funnel is 2/3 full and tap to settle. Pre-rinse the Na_2SO_4 with methylene chloride.

11.4. Quantitatively transfer the extract to the KD Concentrator by pouring it through the sodium sulfate. Complete the transfer by rinsing the extract container and the funnel with methylene chloride (approximately 20 mL).

11.5. Attach a three-ball Snyder column to the KD and place it on a hot water bath (75-90°C). Immediately pre-wet the Snyder column with several milliliters of methylene chloride to prevent sample bumping.

11.6. Concentrate the extract to an apparent volume of 1.0 mL and remove from heat. Do not permit the extract to go dry, because many analytes are sensitive to thermal decomposition. Allow the KD concentrator to drain and cool to ambient temperature before removing the Synder column.

11.7. Invert the Snyder column and rinse with a small amount (approximately 2.0 mL) of methylene chloride. Collect the rinse in the KD flask. Rinse the inside walls of the KD flask again with a small amount of methylene chloride. Collect in the receiver tube.

11.8. Place the receiver tube in a water bath that is near, but below, the boiling point of the solvent. Direct a gentle stream of dry nitrogen over the surface of the solvent. Periodically rinse the inside walls of the receiver tube with methylene chloride to prevent loss of analyte. Allow the extract to dry to an apparent volume of 0.5 mL then remove from the bath.

Occasionally an extract will stop evaporating, form a precipitate, or be highly colored. In these instances the extract should be concentrated to 10.0 mL and cleaned using gel permeation chromatography (GPC) (refer to Method EO520).

11.9. If the extract has evaporated to 0.5 mL, quantitatively transfer the extract to a 1.0-mL volumetric tube and dilute to volume with methylene chloride. Transfer the concentrated extract to a 1.8-mL screw cap vial which has been appropriately labeled. Refrigerate at 4°C until ready to analyze.

11.10. When a sample is being prepared simultaneously for BNAs and organochlorine pesticides, the initial extract should be concentrated to 10 mL and cleaned by GPC before splitting the extract. Refer to Method EO520.

12. Extract Split

Used for low-level BNAs and organochlorine pesticides in soils.

Following the procedure described in Section 11, concentrate the gross extracts to 10.0 mL methylene chloride. If the extracts are highly colored or contain large amounts

of coextracted interferences, they need to be cleaned by GPC according to Method EO520 before splitting. Once this has been done, proceed with this section.

12.1. With an SMI micropipette transfer 500 μL of the 10.0-mL extract to a receiver tube containing 5.0 mL of hexane and mix thoroughly. This is the pesticide fraction.

12.2. Using nitrogen blowdown, concentrate the remaining 9.5 mL to 0.95 mL of methylene chloride. This is the BNA fraction.

12.3. Complete the split and solvent exchange by concentrating the pesticide fraction to 0.5 mL.

NOTE: start evaporation with the bath temperature at 40°C. After 5 min, increase the temperature to 65°C and continue concentrating, occasionally rinsing the tubes with hexane.

12.4. Remove the receiver tubes from the bath and allow to cool. Add 0.5 mL of acetone to each tube to give a total volume of 1.0 mL. Clean the pesticide fraction by alumina column chromatography as described in Section 13.

13. Pesticide Fraction Cleanup

Alumina column chromatography. Adsorption chromatography relies on the ability of solid material to retain solute by surface adsorption. The adsorbed material can then be selectively eluted depending upon the organic solvent chosen, analyte solubility, and polarity.

A neutral alumina cleanup is used to remove the BNA surrogates from the pesticide fraction of extracts which have been split for BNA/OCP analysis.

13.1. Prepare Super I neutral alumina to activity III by adding 7% reagent water (vol/wt) to the alumina. In a tightly sealed glass container, shake on a wrist action shaker for 2 h or shake vigorously by hand for 5-10 min. No lumps should be present.

13.2. Loosely plug a 10-mL disposable glass pipette with glass wool. Add 3.0 g of activity III alumina and tap to settle. Do not pre-wet the alumina.

13.3. With a Pasteur pipette, add the entire 1.0 mL extract to the top of the alumina and immediately rinse the concentrator tube with 1.0 mL of hexane. Add this rinse to the alumina. Collect the eluate in another clean receiver tube. Continue eluting the alumina with 9.0 mL of hexane. Do not allow the column to go dry during addition and elution of the sample extract.

13.4. Concentrate the eluate to 1.0 mL using nitrogen blowdown techniques. Transfer the extract to an appropriately labeled 1.8-mL screw cap vial and refrigerate at 4°C until ready to analyze.

14. GC/MS Calibration

14.1. This application uses a slightly polar methyl silicone stationary phase bonded to a fused silica capillary column such as the J&W DB-5.625, Supelco SPB-5, or Quadrex 007-2. Column dimensions are nominally 30-m x 0.25-mm-id, 0.50-μm film thickness.

14.2. The following approximate gas chromatographic parameters are used for data acquisition:

Initial temp.: 35°C	Carrier: He
Initial time: 4.5 min	Flow: 1.0 mL/min
Final temp.: 290°C	Inlet temp.: 280°C
Final time: 15 min	Interface temp.: 300°C
Rate: 10°C/min	

Some variations are allowed for final temperature, final time, and flow rate, when they improve the chromatography or analytical performance.

14.3. DFTPP tuning.

14.3.1. The quadrupole mass spectrometer is operated in a scanning, electron impact ionization mode. The spectrometer is tuned with a calibration compound, perfluorotributylamine (PFTBA), so that a 50-ng injection of decafluorotriphenylphosphine (DFTPP) results in a spectrum which satisfies the key ion abundance and the resolution criteria listed in Table II.

TABLE II. KEY ION ABUNDANCE AND RESOLUTION CRITERIA

Mass	Ion abundance criteria
51	30.0-60.0% of mass 198
68	<2.0% of mass 69
70	<2.0% of mass 69
127	40.0-60.0% of mass 198
197	<1.0% of mass 198
198	base peak, 100% relative abundance
199	5.0-9.0% of mass 198

TABLE II. KEY ION ABUNDANCE AND RESOLUTION CRITERIA (cont)	
Mass	Ion abundance criteria
275	10.0-30.0% of mass 198
365	>1.00% of mass 198
441	present but less than mass 443
442	>40.0% of mass 198
443	17.0-23.0% of mass 442

14.3.2. Before any standards or samples are analyzed, these tuning criteria must be met and documented for each mass spectrometer used for this application. The criteria, once met, are valid for a 12-h period during which standards, samples, and blanks may be analyzed. At the end of the 12-h period, the DFTPP criteria must be met again before continued analysis.

14.4. Initial calibration.

14.4.1. Once the mass spectrometer is hardware-tuned, it must be initially calibrated with a minimum of five standard concentrations to demonstrate response linearity. Table III lists those analytes requiring only four initial calibration points. Analyze standards at concentrations of 20, 50, 80 120, and 160 μg/mL. The five-point calibration must meet the USEPA response factor criteria listed in Section 14.4.2.

TABLE III. COMPOUNDS REQUIRING A FOUR-POINT CALIBRATION USEPA-CLP SOW 2/88	
Benzoic acid	2,4-Dinitrophenol
2,4,5-Trichlorophenol	2-Nitroaniline
3-Nitroaniline	4-Nitroaniline
4-Nitrophenol	Pentachlorophenol
4,6-Dinitro-2-methylphenol	

14.4.2. Calculate response factors (RF) for all individual calibration compounds. The percent relative standard deviation (% RSD) for each compound should be less than 30% and must be less than 30% for all Calibration check compounds (CCC). See Table IV.

TABLE IV. CONTINUING CALIBRATION CHECK COMPOUNDS (CCC)

% RSD MUST BE <30.0	
Acenaphthene	4-Chloro-3-methylphenol
1,4-Dichlorobenzene	2,4-Dichlorophenol
Hexachlorobutadiene	2-Nitrophenol
N-Nitrosodiphenylamine	Phenol
Di-n-octyl phthalate	Pentachlorophenol
Fluoranthene	2,4,6-Trichlorophenol
Benzo(a)pyrene	

Response factors are calculated using the following equation:

$$RF = \frac{(Ax)\ (Cis)}{(Ais)\ (Cx)},$$

where Ax = area of the characteristic ion for the compound being measured,
Cis = concentration of the internal standard (ng/μL),
Ais = area of the characteristic ion for the nearest internal standard, and
Cx = concentration of the compound being measured (ng/μL).

Percent relative standard deviation is calculated using the following equation:

$$\%RSD = \frac{(SD)}{(RF)} \times 100$$

14.4.3. The minimum average response for system performance check compounds (SPCCs) must be 0.050 or greater. Table V contains a list of these compounds.

TABLE V. SYSTEM PERFORMANCE CHECK COMPOUNDS (SPCC) AVERAGE RF MUST BE >0.05
N-Nitroso-di-n-propylamine
Hexachlorocyclopentadiene
2,4-Dinitrophenol
4-Nitrophenol

14.4.4. Relative retention times of each compound from each standard should agree within 0.06 retention time units.

14.4.5. If the % RSD for any CCC, or the minimum RF for any SPCC is not met, corrective action must be taken. An individual calibration point or the entire calibration curve may need reanalysis.

14.5. Continuing calibration.

Each day, immediately after DFTPP criteria have been demonstrated, a continuing calibration standard containing 50 μg/mL of each target analyte is analyzed. The relative response factor for each analyte is compared with the corresponding average response factor obtained from the initial calibration.

14.5.1. Each continuing calibration must meet the criteria listed below:

14.5.1.1. All system performance check compounds must have a minimum response factor not less than 0.050. See Table V.

14.5.1.2. The percent difference between the continuing calibration relative response factor and the average relative response factor from the initial calibration must not be greater than 25.0% for any CCC. See Table IV for a list of these analytes. If this requirement is met, the calibration is assumed to be valid.

The percent difference is calculated using the following equation:

$$\% \text{ Difference} = \frac{RFi - RFc}{RFi} \times 100 \quad ,$$

where RFi = average response factor from the initial calibration, and
RFc = response factor from the current continuing calibration.

14.5.1.3. The percent difference between the continuing calibration relative response factor and the average relative response from the initial calibration should not be greater than 20.0% for any target compound for which the instrument is calibrated. If the percent difference exceeds this value it is considered as a warning limit.

14.5.2. If the preceding calibration criteria are not met, corrective action is taken and the continuing calibration standard is reanalyzed. If the criteria are still not met, a new five-point initial calibration is performed.

14.5.3. Once all continuing calibration criteria have been met, the method ID file is updated with the current relative retention times (RRTs) and response factors (RFs) before acquiring and processing sample data.

14.5.4. The method ID file contains retention-time and mass-spectral data pertinent to a given target compound list. It is defined and edited by the user and resides on the GC/MS data system.

15. Quality Assurance and Data Interpretation Requirements

15.1. All calibration criteria listed in the previous section must be met before samples are analyzed.

15.2. Method blank analysis. A method blank is a volume of reagent water or a purified solid material which is taken through the entire analytical procedure. The weight or volume of the blank must approximate that of the samples being analyzed.

15.2.1. Blanks are analyzed at a frequency of once for every 20 samples of similar matrix or whenever samples are extracted by the same procedure, whichever is more frequent. The following criteria are checked immediately after blank analysis:

- The method blank should contain less than five times the practical quantitation limit (PQL) of phthalate esters in the target compound list.

- All other analytes present on the target compound list should not be present at concentrations greater than the PQL.

- Recovery of all surrogate compounds must be within specified limits (Table VI). If these criteria are not met, reanalyze or reextract another blank to determine whether the incident is isolated or an out-of-control status exists.

15.3. Surrogate spike requirements. Each sample prepared and analyzed for semivolatile compounds is fortified with known amounts of base-neutral and acid extractable compounds. By evaluating their recovery, measured as a percentage, the analyst can draw conclusions concerning the analytical efficiency on a sample-by-sample basis.

15.3.1. Surrogate spike recoveries are considered to be acceptable if they fall within the ranges specified in Table VI.

The following conditions indicate unacceptable surrogate recovery: (1) recovery of any one surrogate in either the base-neutral or acid fraction is less than 10% and (2) recoveries of any two surrogate compounds in either base-neutral or acid fraction are outside of recovery limits.

TABLE VI. BNA SURROGATE SPIKE RECOVERY LIMITS IN PERCENT

Surrogate Compound	Water	Soil
Nitrobenzene-d_5	35-114	23-120
2-Fluorobiphenyl	43-116	30-115
Terphenyl-d_{14}	33-141	18-137
Phenol-d_5	10-94	24-113
2-Fluorophenol	21-100	25-121
2,4,6-Tribromophenol	10-123	19-122

15.3.2. When surrogate spike recoveries are determined to be out of control, the analyst needs to determine if the cause is matrix- or process-dependent. Reextraction should be requested when there is sufficient sample and holding time can be met. Whichever conclusion is reached needs to be

addressed in the case narrative and/or anomaly summary. Corrective action will be implemented to alleviate the causes of the out-of-control condition.

15.4. Matrix spike and matrix spike duplicate recovery requirements. In order to evaluate the matrix effect of a sample upon the analytical methodology employed, known concentrations of base/neutral and acid target compounds are added to duplicates of a given sample. Table VII is a list of spike compounds. The sample chosen to be spiked should be representative of the samples from a given project. Reagent water is frequently used as a spiking medium for aqueous samples.

TABLE VII. BNA MATRIX SPIKE COMPOUNDS

Compound	Fraction	Amount added (μg)
1,2,4-Trichlorobenzene	BN	50
Acenaphthene	BN	50
2,4-Dinitrotoluene	BN	50
Pyrene	BN	50
N-Nitroso-di-n-propylamine	BN	50
1,4-Dichlorobenzene	BN	50
Pentachlorophenol	ACID	100
Phenol	ACID	100
2-Chlorophenol	ACID	100
4-Chloro-3-methylphenol	ACID	100
4-Nitrophenol	ACID	100

15.4.1. Matrix spike and matrix spike duplicate data are generated once for every 20 samples of a given matrix type prepared by the same method.

15.4.2. Matrix spike/matrix spike duplicates and the original unspiked sample must be concentrated to the same final volume and analyzed at the same dilution level. If high levels of target compounds are detected that are not matrix spike compounds, the original sample needs only to be diluted to enable compound quantitation.

15.4.3. Spike recovery is evaluated in terms of percent recovery and the relative percent difference (RPD) between individual spike compounds in the MS and MSD. This data can be used to evaluate the long-term precision and accuracy of the method. Table VIII lists spike recovery limits.

TABLE VIII. BNA MATRIX SPIKE RECOVERY LIMITS - SOIL

Compound	Percent recovered			RPD
1,2,4-Trichlorobenzene	38	-	107	23
Acenaphthene	31	-	137	19
2,4-Dinitrotoluene	28	-	89	47
Pyrene	35	-	142	36
N-Nitroso-di-n-propylamine	41	-	126	38
1,4-Dichlorobenzene	28	-	104	27
Pentachlorophenol	17	-	109	47
Phenol	26	-	90	35
2-Chlorophenol	25	-	102	50
4-Chloro-3-methylphenol	26	-	103	33
4-Nitrophenol	11	-	114	50

15.5. Blind spikes. It is EM-9 QA/QC policy to prepare and submit blind spikes on a regular basis as an independent check of method accuracy. Standard reference materials resemble submitted matrices as closely as possible.

15.6. Sample analysis. Samples can be analyzed upon successful completion of the calibration procedures addressed in Section 14. Sample data acquisition must be completed within the specified 12-h tune period using the conditions by which the standard was acquired. Samples must be analyzed within 40 d of sample extraction.

15.6.1. Internal standard response from each sample injection must agree within a factor of two (-50% to 200%) with the internal standard response from the most recent continuing calibration standard.

15.6.2. Sample internal standard retention times must not differ by more than 30 s from the continuing calibration standard.

15.6.3. Each analytical run is checked for detector saturation for each target compound positively identified.

15.6.4. All data is evaluated for correctness of dilution. When compounds are detected at concentrations greater than 160 ppm, the sample extracts are diluted and reanalyzed.

15.6.5. Discrete chromatographic peaks that are not identified as target compounds are treated as tentatively identified compounds (TICs). These compounds may be identified if the customer requests this service. A tentative identification is made by comparison of the unknown spectra to a mass spectral database.

15.7. Qualitative analysis.

15.7.1. Target compounds detected in sample injections are positively identified on the basis of relative retention time (RRT) and mass spectral criteria. Table IX is a list of analytes and their corresponding characteristic ions.

15.7.1.1. The sample component's relative retention time must agree within ±0.06 RRT units with that of the same component in the continuing calibration standard.

15.7.1.2. Qualitative verification requires the following conditions to be met:

- All ions present in the standard mass spectra at a relative intensity >10% must be present in the sample spectrum.

- The relative intensities of ions specified above must agree within 20%.

- Ions with relative intensities >10% in the sample spectra but not present in the standard spectra must be accounted for by generating extracted ion current profiles (EICP) for the relevant ions.

- Compounds present in samples but determined not to be target compounds are treated as TICs. A maximum of 20 discrete compounds may be identified (at customer's discretion) by comparison of unknown spectra with a mass spectral library data base. TICs will be searched only when their relative ion concentration (RIC) area is greater than 10% of the nearest internal standard RIC area.

15.8. Quantitative analysis. When a target compound has been positively identified, quantitation is based on the EICP of the primary characteristic ion using the internal standard technique. The internal standard used will be the one nearest the retention time of the analyte.

15.8.1. The following calculations are used to quantify target analytes:

Low-level soil, sludge, sediment, or waste

$$\text{Conc of analyte (ng/g)} = \frac{A_x \times I_s \times V_t}{A_{is} \times R_f \times W_s \times V_s \times D},$$

where Ax = area of the characteristic ion for the analyte being measured,
Is = amount of internal standard injected (ng),
Vt = volume of total extract taking into account any dilutions,
Ais = area of characteristic ion for the internal standard,
Rf = response factor for the compound being measured,
Ws = weight of sample extracted or diluted in grams,
Vs = volume of extract injected (μL), and

$$D = \frac{(100 - \%\ \text{moisture in sample})}{100},$$

where D = 1.0 if the data will be reported on a wet-weight basis.

15.8.2. Calculation of response factors (RF). This applies to 1.0-μL injections of standards for continuing and initial calibration purposes.

$$RF = \frac{(Ax)\ (Cis)}{(Ais)\ (Cx)},$$

where Ax = area of the characteristic ion for the analyte being measured,
Cis = concentration of the specific internal standard (40 ng/μL),
Ais = area of the characteristic ion of the specific internal standard, and

Cx = concentration of the compound being measured (ng/μL).

15.8.3. Percent moisture determination. When sample concentrations are to be reported based on a dry weight, percent moisture is calculated using the following equation:

$$\% M = \frac{Sw - Sd}{Sw} \times 100 ,$$

where Sw = wet weight of the soil aliquot less the container weight, and
Sd = dry weight of the soil aliquot less the container weight after oven drying at 105°C for 24 h.

16. Reporting

Analytical results are reported using one of two target compound lists (TCLs) depending upon the requirements of the submitter. The Appendix 9 TCL list (groundwater monitoring) includes the Hazardous Substance List (HSL) plus 43 additional analytes. Table X lists HSL target compounds and Table XI lists the Appendix 9 target compounds. Compounds on the HSL list are routinely analyzed for and reported. Appendix 9 compounds are not routinely analyzed.

17. Proper Waste Disposal Practices

17.1. General waste management.

17.1.1. Each analyst within the section shall be given Waste Generator training by EM-8 within 9 days of date of hire.

17.1.2. Wherever possible, the generation of waste shall be minimized through reduction, reuse, or recycling. Wherever possible, containers should be segregated to reflect the nature of the hazardous waste and the eventual waste-disposal methods. For example, chlorinated solvent wastes should be segregated from flammable, nonchlorinated solvents, and >50-ppm contaminated PCB waste should be segregated from <50-ppm PCB contaminated waste. This is especially important in analysis areas where the waste generated is considered to be mixed waste.

17.1.3. Categorize the waste using a Waste Profile Form from EM-8.

17.1.4. Upon completion of a Waste Profile Form, the waste is disposed of by completing a Waste Disposal Request Form from EM-7. Approximately

30 days is required for the disposal of waste after the completion of the listed forms.

17.2. Solid waste.

17.2.1. Solid hazardous waste, such as contaminated paper towels, pipettes, spent syringes, and glass vials, is accumulated in a covered plastic container lined with a plastic bag. The container is labeled with a hazardous waste label identifying the hazard, the type of material being stored (i.e., pipettes, paper towels, etc.), the accumulation start date, and the laboratory of origin.

17.2.2. The waste container is opened only for the time necessary to add the waste.

17.3. Liquid waste.

17.3.1. Liquid wastes, such as spent samples and spent solvents that are not reuseable, are accumulated in glass or steel containers appropriate for the type of sample being stored. For example, caustic materials should be stored in glass containers whereas spent solvents that are not to be recycled should be stored in metal containers.

17.3.2. All containers storing hazardous liquid materials must be secondarily contained. The container is labeled with a hazardous waste label identifying the hazard, the type of material being stored, the accumulation start date, and the laboratory of origin.

17.3.3. The waste container is opened only for the time necessary to add the waste.

17.4. Unused samples.

17.4.1. Return unused environmental samples to the Sample Management section for disposal.

18. Source Materials

18.1. USEPA Contract Laboratory Program, Statement of Work for Organic Analysis Multi-media, Multi-Concentration, 2/88.

18.2. USEPA "Test Methods for Evaluating Solid Waste, Physical/Chemical Methods," SW-846, Third ed., 1988.

18.3. Sorbent Extraction Technology, K.C. Van Horne, Analytical International, Inc. 1985.

18.4 "Hazardous and Mixed Waste," Administrative Requirement 10-3, in *Environment, Safety, and Health Manual*, Los Alamos National Laboratory Manual, Chapter 1 (most recent edition).

TABLE IX.
CHARACTERISTICS IONS FOR SEMIVOLATILE COMPOUNDS

1 Compound	Retention time (min)	Primary ion	Secondary ion(s)
2-Picoline	3.75[a]	93	66, 92
Aniline	5.68	93	66, 65
Phenol	5.77	94	65, 66
Bis(2-chloroethyl) ether	5.82	93	63, 95
2-Chlorophenol	5.97	128	64, 130
1,3-Dichlorobenzene	6.27	146	148, 111
1,4-Dichlorobenzene-d_4 (I.S.)	6.35	152	150, 115
1,4-Dichlorobenzene	6.40	146	148, 111
Benzyl alcohol	6.78	108	79, 77
1,2-Dichlorobenzene	6.85	146	148, 111
N-Nitrosomethylethylamine	6.97	88	42, 88, 43, 56
Bis(2-chloroisopropyl) ether	7.22	45	77, 121
Ethyl carbamate	7.27	62	62, 44, 45, 74
Thiophenol (Benzenethiol)	7.42	110	110, 66, 109, 84
Methyl methanesulfonate	7.48	80	80, 79, 65, 95
N-Nitroso-di-n-propylamine	7.55	70	42, 101, 130
Hexachloroethane	7.65	117	201, 199
Maleic anhydride	7.65	54	54, 98, 53, 44
Nitrobenzene	7.87	77	123, 65
Isophorone	8.53	82	95, 138
N-Nitrosodiethylamine	8.70	102	102, 42, 57, 44, 56
2-Nitrophenol	8.75	139	109, 65
2,4-Dimethylphenol	9.03	122	107, 121
p-Benzoquinone	9.13	108	54, 108, 82, 80
Bis (2-chloroethoxy) methane	9.23	93	95, 123
Benzoic acid	9.38	122	105, 77

TABLE IX. (cont)

Compound	Retention time (min)	Primary ion	Secondary ion(s)
2,4-Dichlorophenol	9.48	162	164, 98
Trimethyl phosphate	9.53	110	110, 79, 95, 109, 140
Ethyl methanesulfonate	9.62	79	79, 109, 97, 45, 65
1,2,4-Trichlorobenzene	9.67	180	182, 145
Naphthalene-d_8 (I.S.)	9.75	136	68
Naphthalene	9.82	128	129, 127
Hexachlorobutadiene	10.43	225	223, 227
Tetraethyl pyrophosphate	11.07	99	99, 155, 127, 81, 109
Diethyl sulfate	11.37	139	139, 45, 59, 99, 111, 125
4-Chloro-3-methylphenol	11.68	107	144, 142
2-Methylnaphthalene	11.87	142	141
2-Methylphenol	12.40	107	107, 108, 77, 79 90
Hexachloropropene	12.45	213	213, 211, 215, 117, 106, 141
Hexachlorocyclopentadiene	12.60	237	235, 272
N-Nitrosopyrrolidine	12.65	100	100, 41, 42, 68, 69
Acetophenone	12.67	105	71, 105, 51, 120
4-Methylphenol	12.82	107	107, 108, 77, 79 90
2,4,6-Trichlorophenol	12.85	196	198, 200
o-Toluidine	12.87	106	106, 107, 77, 51, 79
3-Methylphenol	12.93	107	107, 108, 77, 79, 90
2-Chloronaphthalene	13.30	162	127, 164
N-Nitrosopiperidine	13.55	114	42, 114, 55, 56,41
1,4-Phenylenediamine	13.62	108	108, 80, 53, 54, 52
1-Chloronaphthalene	13.65[a]	162	127, 164
2-Nitroaniline	13.75	65	92, 138
5-Chloro-2-methylaniline	14.28	106	106, 141, 140, 77, 89
Dimethyl phthalate	14.48	163	194, 164

TABLE IX. (cont)

Compound	Retention time (min)	Primary ion	Secondary ion(s)
Acenaphthylene	14.57	152	151, 153
2,6-Dinitrotoluene	14.62	165	63, 89
Phthalic anhydride	14.62	104	104, 76, 50, 148
o-Anisidine	15.00	108	80, 108, 123, 52
3-Nitroaniline	15.02	138	108, 92
Acenaphthene-d_{10} (I.S.)	15.05	164	162, 160
Acenaphthene	15.13	154	153, 152
2,4-Dinitrophenol	15.35	184	63, 154
2,6-Dinitrophenol	15.47	162	162, 164, 126, 98, 63
4-Chloroaniline	15.50	127	127, 129, 65, 92
Isosafrole	15.60	162	162, 131, 104, 77, 51
Dibenzofuran	15.63	168	139
2,4-Diaminotoluene	15.78	121	121, 122, 94, 77, 104
2,4-Dinitrotoluene	15.80	165	63, 89
4-Nitrophenol	15.80	139	109, 65
2-Naphthylamine	16.00[a]	143	115, 116
1,4-Naphthoquinone	16.23	158	158, 104, 102, 76, 50, 130
p-Cresidine	16.45	122	122, 94, 137, 77, 93
Dichlorovos	16.48	109	109, 185, 79, 145
Diethyl phthalate	16.70	149	177, 150
Fluorene	16.70	166	165, 167
2,4,5-Trimethylaniline	16.70	120	120, 135, 134, 91, 77
N-Nitrosodibutylamine	16.73	84	84, 57, 41, 116, 158
4-Chlorophenyl phenyl ether	16.78	204	206, 141
Hydroquinone	16.93	110	110, 81, 53, 55
4,6-Dinitro-2-methylphenol	17.05	198	51, 105

TABLE IX. (cont)

Compound	Retention time (min)	Primary ion	Secondary ion(s)
Resorcinol	17.13	110	110, 81, 82, 53, 69
N-Nitrosodiphenylamine	17.17	169	168, 167
Safrole	17.23	162	162, 162, 104, 77, 103, 135
Hexamethyl phosphoramide	17.33	135	135, 44, 179, 92, 42
3-(Choromethyl) pyridine hydrochloride	17.50	92	92, 127, 129, 65, 39
Diphenylamine	17.54[a]	169	168, 167
1,2,4,5-Tetrachlorobenzene	17.97	216	216, 214, 179, 108, 143, 218
1-Naphthylamine	18.20	143	143, 115, 89, 63
1-Acetyl-2-thiourea	18.22	118	43, 118, 42, 76
4-Bromophenyl phenyl ether	18.27	248	250, 141
Toluene diisocyanate	18.42	174	174, 145, 173, 146, 132, 91
2,4,5-Trichlorophenol	18.47	196	196, 198, 97, 132, 99
Hexachlorobenzene	18.65	284	142, 249
Nicotine	18.70	84	84, 133, 161, 162
Pentachlorophenol	19.25	266	264, 268
5-Nitro-2-methylaniline	19.27	152,	77, 152, 79, 106, 94
Thionazine	19.35	107	96, 107, 97, 143, 79, 68
4-Nitroaniline	19.37	138	138, 65, 108, 92, 80, 39
Phenanthrene-d_{10} (I.S.)	19.55	188	94, 80
Phenanthrene	19.62	178	179, 176
Anthracene	19.77	178	176, 179
1,4-Dinitrobenzene	19.83	168	168, 75, 50, 76, 92, 122
Mevinphos	19.90	127	127, 192, 109, 67, 164
Naled	20.03	109	109, 145, 147, 301, 79, 189
1,3-Dinitrobenzene	20.18	168	168, 76, 50, 75, 92, 122
Diallate (cis or trans)	20.57	86	86, 234, 43, 70

TABLE IX. (cont)

Compound	Retention time (min)	Primary ion	Secondary ion(s)
1,2-Dinitrobenzene	20.58	168	168, 50, 63, 74
Diallate (trans or cis)	20.78	86	86, 234, 43, 70
Pentachlorobenzene	21.35	250	250, 252, 108, 248, 215, 254
5-Nitro-2-methoxyaniline	21.50	168	168, 79, 52, 138, 153, 77
Pentachloronitrobenzene	21.72	237	237, 142, 214, 249, 295, 265
4-Nitroquinoline-1-oxide	21.73	174	174, 101, 128, 75, 116
Di-n-butyl phthalate	21.78	149	150, 104
2,3,4,6-Tetrachlorophenol	21.88	232	232, 131, 230, 166, 234, 168
Demeton-o	22.72	88	88, 89, 60, 61, 115, 171
Fluoranthene	23.33	202	101, 203
1,3,5-Trinitrobenzene	23.68	75	75, 74, 213, 120, 91, 63
Dicrotophos	23.82	127	127, 67, 72, 109, 193, 237
Benzidine	23.87	184	92, 185
Trifluralin	23.88	306	306, 43, 264, 41, 290
Bromoxynil	23.90	277	277, 279, 88, 275, 168
Pyrene	24.02	202	200, 203
Monocrothophos	24.08	127	127, 192, 67, 97, 109
Phorate	24.10	75	75, 121, 97, 93, 260
Sulfallate	24.23	188	188, 88, 72, 60, 44
Demeton-s	24.30	88	88, 60, 81, 89, 114, 115
Phenacetin	24.33	108	180, 179, 109, 137, 80
Dimethoate	24.70	87	87, 93, 125, 143, 229
Phenobarbital	24.70	204	204, 117, 232, 146, 161
Carbofuran	24.90	164	164, 149, 131, 122
Octamethyl pyrophosphoramide	24.95	135	135, 44, 199, 286, 153, 243
4-Aminobiphenyl	25.08	169	169, 168, 170, 115

TABLE IX.. (cont)

Compound	Retention time (min)	Primary ion	Secondary ion(s)
Terbufos	25.35	231	231, 57, 97, 153, 103
Pronamide	25.48	173	173, 175, 145, 109, 147
Aminoazobenzene	25.72	197	92, 197, 120, 65, 77
Dichlone	25.77	191	191, 163, 226, 228, 135, 193
Dinoseb	25.83	211	211, 163, 147, 117, 240
Disulfoton	25.83	88	88, 97, 89, 142, 186
Fluchloralin	25.88	306	306, 63, 326, 328, 264, 65
Mexacarbate	26.02	165	165, 150, 134, 164, 222
4.4'-Oxydianiline	26.08	200	200, 108, 171, 80, 65
Butyl benzyl phthalate	26.43	149	91, 206
4-Nitrobiphenyl	26.55	199	199, 152, 141, 169, 151
Phosphamidon	26.85	127	127, 264, 72, 109, 138
2-Cyclohexyl-4,6-dinitrophenol	26.87	231	231, 185, 41, 193, 266
Methyl Parathion	27.03	109	109, 125, 263, 79, 93
Carbaryl	27.17	144	144, 115, 116, 201
Dimethylaminoazobenzene	27.50	225	225, 120, 77, 105, 148, 42
Propylthiouracil	27.68	170	170, 142, 114, 83
Benz (a) anthracene	27.83	228	229, 226
Chrysene-d_{12} (I.S.)	27.88	240	120, 236
3,3'-Dichlorobenzidine	27.88	252	254, 126
Chrysene	27.97	228	226, 229
Malathion	28.08	173	173, 125, 127, 93, 158
Kepone	28.18	272	272, 274, 237, 178, 143, 270
Fenthion	28.37	278	278, 125, 109, 169, 153
Parathion	28.40	109	109, 97, 291, 139, 155

TABLE IX. (cont)

Compound	Retention time (min)	Primary ion	Secondary ion(s)
Anilazine	28.47	239	239, 241, 143, 178, 89
Bis(2-ethylhexyl) phthalate	28.47	149	167, 279
3,3'-Dimethylbenzidine	28.55	212	212, 106, 196, 180
Carbophenothion	28.58	157	157, 97, 121, 342, 159, 199
5-Nitroacenaphthene	28.73	199	199, 152, 169, 141, 115
Methapyrilene	28.77	97	97, 50, 191, 71
Isodrin	28.95	193	193, 66, 195, 263, 265, 147
Captan	29.47	79	79, 149, 77, 119, 117
Chlorfenvinphos	29.53	267	267, 269, 323, 325 295
Crotoxyphos	29.73	127	127, 105, 193, 166
Phosmet	30.03	160	160, 77, 93, 317, 76
EPN	30.11	157	157, 169, 185, 141, 323
Tetrachlorvinphos	30.27	329	109, 329, 331, 79, 333
Di-n-octyl phthalate	30.48	149	167, 43
2-Aminoanthraquinone	30.63	223	223, 167, 195
Barban	30.83	222	222, 51, 87, 224, 257, 153
Aramite	30.92	185	185, 191, 319, 334, 197, 321
Benzo(b)fluoranthene	31.45	252	253, 125
Nitrofen	31.48	283	283, 285, 202, 139, 253
Benzo(k)fluoranthene	31.55	252	253, 125
Chlorobenzilate	31.77	251	251, 139, 253, 111, 141
Fensulfothion	31.87	293	293, 97, 308, 125, 292
Ethion	32.08	231	231, 97, 153, 125, 121
Diethylstilbestrol	32.15	268	268, 145, 107, 239, 121, 159
Famphur	32.67	218	218, 125, 93, 109, 217
Tri-p-tolyl phosphate[b]	32.75	368	368, 367, 107, 165, 198

TABLE IX. (cont)

Compound	Retention time (min)	Primary ion	Secondary ion(s)
Benzo(a)pyrene	32.80	252	253, 125
Perylene-d_{12} (I.S.)	33.05	264	260, 265
7,12-Dimethylbenz(a)anthracene	33.25	256	256, 241, 239, 120
5,5-Diphenylhydantoin	33.40	180	180, 104, 252, 223, 209
Captafol	33.47	79	79, 77, 80, 107
Dinocap	33.47	69	69, 41, 39
Methoxychlor	33.55	227	227, 228, 152, 114, 274, 212
2-Acetylaminofluorene	33.58	181	181, 180, 223, 152
4,4'-Methylenebis-(2-chloroaniline)	34.38	231	231, 266, 268, 140, 195
3,3'-Dimethoxybenzidine	34.47	244	244, 201, 229
3-Methylcholanthrene	35.07	268	268, 252, 253, 126, 134, 113
Phosalone	35.23	182	182, 184, 367, 121, 379
Azinphos-methyl	35.25	160	160, 132, 93, 104, 105
Leptophos	35.28	171	171, 377, 375, 77, 155, 379
Mirex	35.43	272	272, 237, 274, 270 239, 235
Tris(2,3-dibromopropyl) phosphate	35.68	201	137, 201, 119, 217, 219, 199
Dibenz(a,j)acridine	36.40	279	279, 280, 277, 250
Mestranol	36.48	277	277, 310, 174, 147, 242
Coumaphos	37.08	362	362, 226, 210, 364, 97, 109
Indeno(1,2,3-cd)pyrene	39.52	276	138, 227
Dibenz(a,h)anthracene	39.82	278	139, 279
Benzo(g,h,i)perylene	41.43	276	138,277
1,2:4,5-Dibenzopyrene	41.60	302	302, 151, 150, 300
Strychnine	45.15	334	334, 335, 333

TABLE IX. (cont)

Compound	Retention time (min)	Primary ion	Secondary ion(s)
Piperonyl sulfoxide	46.43	162	162, 135, 105, 77
Hexachlorophene	47.98	196	196, 198, 209, 211, 406, 408
Aldrin		66	263, 220
Aroclor-1016		222	260, 292
Aroclor-1221		190	224, 260
Aroclor-1232		190	224, 260
Aroclor-1242		222	256, 292
Aroclor-1248		292	362, 326
Aroclor-1254		292	362, 326
Aroclor-1260		360	362, 394
α-BHC		183	181, 109
β-BHC		181	183, 109
4,4'-DDD		235	237, 165
4,4'-DDE		246	248, 176
4,4'-DDT		235	237,165
Dieldrin		79	263, 279
1,2-Diphenylhydrazine		77	105, 182
Endosulfan I		195	339, 341
Endosulfan II		337	339, 341
Endosulfan sulfate		272	387, 422
Endrin		263	82, 81
Endrin aldehyde		67	345, 250
Endrin ketone		317	67, 319
2-Fluorobiphenyl (surr.)		172	171
2-Fluorophenol (surr.)		112	64
Heptachlor		100	272, 274
Heptachlor epoxide		353	355, 351

TABLE IX. (cont)

Compound	Retention time (min)	Primary ion	Secondary ion(s)
Nitrobenzene-d_5 (surr.)		82	128, 54
N-Nitrosodimethylamine		42	74, 44
Phenol-d_6 (surr.)		99	42, 71
Terphenyl-d_{14} (surr.)		244	122, 212
2,4,6-Tribromophenol (surr.)		330	332, 141
Toxaphene		159	231, 233

I.S. = internal standard
surr. = surrogate
[a]Estimated retention times
[b]Substitute for the non-specific mixture, tricresyl phosphate

TABLE X.
LIMIT OF QUANTITATION FOR HAZARDOUS SUBSTANCE LIST OF SEMIVOLATILE ORGANIC ANALYTES IN SOIL

Compound	CAS number	LOQ µg/kg
Acenaphthene	83-32-9	330
Acenaphthylene	208-96-2	330
Anthracene	120-12-7	330
Aniline	62-53-3	330 *
Azobenzene	103-33-3	330
Benzidine	92-87-5	330 *,a
Benz(a)anthracene	56-55-3	330
Benzo(b)fluoranthene	205-99-2	330
Benzo(k)fluoranthene	207-88-9	330
Benzoic Acid	65-85-0	330 *,c
Benzo(g,h,i)perylene	191-24-2	330
Benzo(a)pyrene	50-32-8	330
Benzyl alcohol	100-51-6	330
Bis(2-chloroethoxy)methane	111-91-1	330
Bis(2-chloroethyl) ether	111-44-4	330
Bis(2-chloroisopropyl) ether	108-60-1	330
4-Bromophenyl phenyl ether	101-55-3	330
Butyl benzyl phthalate	85-68-7	330 *
4-Chloroaniline	106-47-8	330 *,c
4-Chloro-3-methylphenol	59-50-7	330
2-Chloroanaphthalene	91-58-7	330
2-Chlorophenol	95-57-8	330
4-Chlorophenyl phenyl ether	7005-72-3	330
Chrysene	218-01-9	330
Dibenz(a,h)anthracene	53-70-3	330
Dibenzofuran	132-64-9	330

TABLE X. (cont)

Compound	CAS number	LOQ µg/kg
Di-n-butyl phthalate	84-74-2	330 *
1,2-Dichlorobenzene	95-50-1	330
1,3-Dichlorobenzene	541-73-1	330
1,4-Dichlorobenzene	106-46-7	330
3,3'-Dichlorobenzidine	91-94-1	330 *
2,4-Dichlorophenol	120-83-2	330
Diethyl phthalate	84-66-2	330 *
2,4-Dimethylphenol	105-67-9	330 *,c
Dimethyl phthalate	131-11-3	330 *
4,6-Dinitro-2-methylphenol	534-52-1	330
2,4-Dinitrophenol	51-28-5	330 *,c
2,4-Dinitrotoluene	121-14-2	330
2,6-Dinitrotoluene	606-20-2	330
Di-n-octyl phthalate	117-84-0	330
Bis(2-ethylhexyl) phthalate	117-81-7	330
Fluoranthene	206-44-0	330
Fluorene	86-73-7	330
Hexachlorobenzene	118-74-1	330
Hexachlorobutadiene	87-68-3	330
Hexachlorocyclopentadiene	77-47-4	330*,d
Hexachloroethane	67-72-1	330
Indeno(1,2,3-cd)pyrene	193-39-5	330
Isophorone	78-59-1	330
2-Methylnaphthalene	91-57-6	330
2-Methylphenol	95-48-7	330 *,c
4-Methylphenol	6-44-5	330 *,c
Naphthalene	91-20-3	330
2-Nitroaniline	88-74-4	330

TABLE X. (cont)

Compound	CAS number	LOQ µg/kg
3-Nitroaniline	99-09-2	330 *,c
4-Nitroaniline	100-01-6	330 *,c
Nitrobenzene	98-95-3	330
2-Nitrophenol	88-75-5	330
4-Nitrophenol	100-02-7	330 *,c
N-nitrosodimethylamine	62-75-9	330 *,c
N-nitrosodiphenylamine	86-30-6	330
N-Nitroso-di-n-propylamine	621-64-7	330 *
Pentachlorophenol	87-86-5	330 *,c
Phenanthrene	85-01-8	330
Phenol	108-95-2	330
Pyrene	129-00-0	330
1,2,4-Trichlorobenzene	120-82-1	330
2,4,5-Trichlorophenol	95-95-4	330
2,4,6-Trichlorophenol	88-06-2	330

* The limit of quantitation has not been verified for these analytes based upon a Method Detection Limit study. All other analytes averaged better than 70% recovery based upon seven repetitions. The amount of each analyte spiked was 330 µg into 1.0 L.

a Exhibits nonreproducible chromatography and oxidative loss during concentration.

c These analytes are subject to erratic chromatographic performance and/or thermal decomposition in the gas chromatograph inlet.

d Subject to thermal decomposition in the chromatographic inlet, chemical reaction with acetone in solution, and photochemical decomposition.

Limits of Quantitation (LOQ) will be two times greater for soil/sediment matrices which have been GPC cleaned.

TABLE XI.
APPENDIX 9 TARGET COMPOUND LIST OF SEMIVOLATILE ORGANIC ANALYTES IN SOIL-LIMIT OF QUANTITATION

Compound	CAS number	LOQ µg/kg
Acenaphthene	83-32-9	330
Acenaphthylene	208-96-2	330
Acetophenone	98-86-2	ND
Anthracene	120-12-7	330
Aniline	62-53-3	330 *
Aramite	140-57-8	ND
Azobenzene	103-33-3	330
Benzidine	92-87-5	330 *,a
Benz(a)anthracene	56-55-3	330
Benzo(b)fluoranthene	205-99-2	330
Benzo(k)fluoranthene	207-88-9	330
Benzoic Acid	65-85-0	330 *,c
Benzo(g,h,i)perylene	191-24-2	330
Benzo(a)pyrene	50-32-8	330
Benzyl alcohol	100-51-6	330
Bis(2-chloroethoxy)methane	111-91-1	330
Bis(2-chloroethyl) ether	111-44-4	330
Bis(2-chloroisopropyl) ether	108-60-1	330
4-Bromophenyl phenyl ether	101-55-3	330
Butyl benzyl phthalate	85-68-7	330 *
4-Chloroaniline	106-47-8	330 *,c
Chlorobenzilate	510-15-6	ND
4-Chloro-3-methylphenol	59-50-7	330
2-Chloroanaphthalene	91-58-7	330
2-Chlorophenol	95-57-8	330
4-Chlorophenyl phenyl ether	7005-72-3	330

TABLE XI. (cont)

Compound	CAS number	LOQ µg/kg
Chrysene	218-01-9	330
Diallate	2303-16-4	ND
Dibenz(a,h)anthracene	53-70-3	330
Dibenzofuran	132-64-9	330
Di-n-butyl phthalate	84-74-2	330 *
1,2-Dichlorobenzene	95-50-1	330
1,3-Dichlorobenzene	541-73-1	330
1,4-Dichorobenzene	106-46-7	330
3,3'-Dichlorobenzidine	91-94-1	330 *
2,4-Dichlorophenol	120-83-2	330
Diethylphthalate	84-66-2	330 *
Dimethoate	60-51-5	ND
7,12-Dimethylbenz(a)-anthracene	57-97-6	ND
2,4-Dimethylphenol	105-67-9	330 *,c
Dimethyl phthalate	131-11-3	330 *
4,6-Dinitro-2-methylphenol	534-52-1	330
2,4-Dinitrophenol	51-28-5	330 *,c
2,4-Dinitrotoluene	121-14-2	330
2,6-Dinitrotoluene	606-20-2	330
Di-n-octyl phthalate	117-84-0	330
Diphenylamine	122-39-4	ND
Dinoseb (DNBP)	88-85-7	ND
Disulfoton	298-04-4	ND
Bis(2-ethylhexyl) phthalate	117-81-7	330
Ethyl methacrylate	97-63-2	ND
Ethyl methanesulfonate	62-50-0	ND

TABLE XI. (cont)

Compound	CAS number	LOQ µg/kg
Famphur	52-85-7	ND
Fluoranthene	206-44-0	330
Fluorene	86-73-7	330
Hexachlorobenzene	118-74-1	330
Hexachlorobutadiene	87-68-3	330
Hexachlorocyclopentadiene	77-47-4	330*,d
Hexachloroethane	67-72-1	330
Hexachlorophene	70-30-4	ND
Hexachloropropene	1888-71-7	ND
Indeno(1,2,3-cd)pyrene	193-39-5	330
Isodrin	465-73-6	ND
Isosafrole	120-58-1	ND
Isophorone	78-59-1	330
Kepone	143-50-0	ND
3-Methylcholanthrene	56-49-5	ND
2-Methylnaphthalene	91-57-6	330
2-Methylphenol	95-48-7	330 *,c
4-Methylphenol	106-44-5	330 *,c
Methapyrilene hydrochloride	91-80-5	ND
Methyl methacrylate	80-62-6	ND
Methyl methanesulfonate	66-27-3	ND
Methyl Parathion	296-00-0	ND
Naphthalene	91-20-3	330
2-Nitroaniline	88-74-4	330
3-Nitroaniline	99-09-2	330 *,c
4-Nitroaniline	100-01-6	330 *,c
Nitrobenzene	98-95-3	330
2-Nitrophenol	88-75-5	330

TABLE XI. (cont)

Compound	CAS number	LOQ µg/kg
4-Nitrophenol	100-02-7	330 *,c
4-Nitroquinoline-1-oxide	56-57-5	ND
5-Nitro-o-toluidine	99-55-8	ND
N-Nitrosodiethylamine	55-18-5	ND
N-Nitrosomethylethylamine	10595-95-6	ND
N-Nitroso-di-n-butylamine	924-16-3	ND
N-Nitrosodimethylamine	62-75-9	330 *,c
N-Nitrosodiphenylamine	86-30-6	330
N-Nitroso-di-n-propylamine	621-64-7	330 *
o-Toluidine	95-53-4	ND
Parathion	56-38-2	ND
Pentachloroethane	76-01-7	ND
Pentachloronitrobenzene	82-68-8	ND
Pentachlorophenol	87-86-5	330 *,c
Phenacetin	62-44-2	ND
Phenanthrene	85-01-8	330
Phenol	108-95-2	330
Phorate	298-02-2	ND
2-Picoline	109-06-8	ND
Pronamide	23950-58-5	ND
Pyridine	110-86-1	ND
Pyrene	129-00-0	330
Safrole	94-59-7	ND
2,3,4,6-Tetrachlorophenol	58-90-2	ND
1,2,4-Trichlorobenzene	120-82-1	330
2,4,5-Trichlorophenol	95-95-4	330
O,O,O-Triethyl phosphorate	126-68-1	ND
2,4,6-Trichlorophenol	88-06-2	330

TABLE XI. (cont)

Compound	CAS number	LOQ µg/kg
sym-Trinitrobenzene	99-35-4	ND
Tetraethyl dithiophosphate	3689-24-5	ND

* The limit of quantitation has not been verified for these analytes based upon a Method Detection Limit study. All other analytes averaged better than 70% recovery based upon seven repetitions. The amount of each analyte spiked was 330 µg into 1.0 L.

a Exhibits nonreproducible chromatography and oxidative loss during concentration.

c These analytes are subject to erratic chromatographic performance and/or thermal decomposition in the gas chromatograph inlet.

d Subject to thermal decomposition in the chromatographic inlet, chemical reaction with acetone in solution, and photochemical decomposition.

ND not determined for these analytes.

Limits of Quantitation (LOQ) will be two times greater for soil/sediment matrices which have been GPC cleaned.

TABLE XII.
PRACTICAL QUANTITATION LIMITS (PQL) FOR SEMIVOLATILE ORGANICS

Compound	Ground water (μg/L)	Soil/Solid (μg/kg)
Acenaphthene	10	660
Acenaphthylene	10	660
Acetophenone	10	ND
2-Acetylaminofluorene	20	ND
1-Acetyl-2-thiourea	1000	ND
2-Aminoanthraquinone	20	ND
Aminoazobenzene	10	ND
4-Aminobiphenyl	20	ND
Anilazine	100	ND
o-Anisidine	10	ND
Anthracene	10	660
Aramite	20	ND
Azinphos-methyl	100	ND
Barban	200	ND
Benz(a)anthracene	10	660
Benzo(b)fluoranthene	10	660
Benzo(k)fluoranthene	10	660
Benzoic Acid	50	3300
Benzo(g,h,i)perylene	10	660
Benzo(a)pyrene	10	660
p-Benzoquinone	10	ND
Benzyl alcohol	20	1300
Bis(2-chloroethoxy)methane	10	660
Bis(2-chloroethyl) ether	10	660
Bis(2-chloroisopropyl) ether	10	660
4-Bromophenyl phenyl ether	10	660

TABLE XII. (cont)

Compound	Ground water (μg/L)	Soil/Solid (μg/kg)
Bromoxynil	10	ND
Butyl benzyl phthalate	10	660
Captafol	20	ND
Captan	50	ND
Carbaryl	10	ND
Carbofuran	10	ND
Carbophenothion	10	ND
Chlorofenvinphos	20	ND
4-Chloroaniline	20	1300
Chlorobenzilate	10	ND
5-Chloro-2-methylaniline	10	ND
4-Chloro-3-methylphenol	20	1300
3-(Chloromethyl)pyridine hydrochloride	100	ND
2-Chloroanaphthalene	10	660
2-Chlorophenol	10	660
4-Chlorophenyl phenyl ether	10	660
Chrysene	10	660
Coumaphos	40	ND
p-Cresidine	10	ND
Crotoxyphos	20	ND
2-Cyclohexyl-4,6-dinitrophenol	100	ND
Demeton-o	10	ND
Demeton-s	10	ND
Diallate	10	ND
2,4-Diaminotoluene	20	ND
Dibenz(a,j)acridine	10	ND

TABLE XII. (cont)

Compound	Ground water (μg/L)	Soil/Solid (μg/kg)
Dibenz(a,h)anthracene	10	660
Dibenzofuran	10	660
Dibenzo(a,e)pyrene	10	ND
Di-n-butyl phthalate	10	ND
Dichlone	NA	ND
1,2-Dichlorobenzene	10	660
1,3-Dichlorobenzene	10	660
1,4-Dichlorobenzene	10	660
3,3'-Dichlorobenzidine	20	1330
2,4-Dichlorophenol	10	660
2,6-Dichlorophenol	10	ND
Dichlorovos	10	ND
Dichlorophos	10	ND
Diethyl phthalate	10	660
Diethylstilbestrol	20	ND
Diethyl sulfate	100	ND
Dimethoate	20	ND
3,3'-Dimethoxybenzidine	100	ND
Dimethylaminoazobenzene	10	ND
7,12-Dimethylbenz(a)-anthracene	10	ND
3,3'-Dimethylbenzidine	10	ND
a,a-Dimethylphenethylamine	ND	ND
2,4-Dimethylphenol	10	660
Dimethyl phthalate	10	660
1,2-Dinitrobenzene	40	ND
4,6-Dinitro-2-methylphenol	50	3300
2,4-Dinitrophenol	50	3300

TABLE XII. (cont)

Compound	Ground water (μg/L)	Soil/Solid (μg/kg)
Dinocap	100	ND
Dinoseb	20	ND
5,5-Diphenylhydantoin	20	ND
Di-n-octyl phthalate	10	660
Disulfoton	10	ND
EPN	10	ND
Ethion	10	ND
Ethyl carbamate	50	ND
Bis(2-ethylhexyl) phthalate	10	660
Ethyl methanesulfonate	20	ND
Famphur	20	ND
Fensulfothion	40	ND
Fenthion	10	ND
Fluchloralin	20	ND
Fluoranthene	10	660
Fluorene	10	660
Hexachlorobenzene	10	660
Hexachlorobutadiene	10	660
Hexachlorocyclopentadiene	10	660
Hexachloroethane	10	660
Hexachlorophene	50	ND
Hexachloropropene	10	ND
Hexamethyl phosphoramide	20	ND
Hydroquinone	ND	ND
Isophorone	10	660
Leptophos	10	ND
Malathion	50	ND
Maleic anhydride	NA	ND

TABLE XII. (cont)

Compound	Ground water (μg/L)	Soil/Solid (μg/kg)
Mestranol	20	ND
Methapyriline	100	ND
Methoxychlor	10	ND
3-Methylcholanthrene	10	ND
4,4'-Methylenebis-(2-chloroaniline)	NA	ND
Methyl methanesulfonate	10	ND
2-Methylnaphthalene	10	660
Methyl Parathion	10	ND
2-Methylphenol	10	660
3-Methylphenol	10	ND
4-Methylphenol	10	660
Mevinphos	10	ND
Mexacarbate	20	ND
Mirex	10	ND
Monocrotophos	40	ND
Naled	20	ND
Naphthalene	10	660
1,4-Naphthoquinone	10	ND
1-Naphthylamine	10	ND
2-Naphthylamine	10	ND
Nicotine	20	ND
5-Nitroacenaphthene	10	ND
4-Nitroaniline	20	ND
5-Nitro-2-methoxyaniline	10	ND
Nitrobenzene	10	660
2-Nitrophenol	10	660
4-Nitrophenol	50	3300

TABLE XII. (cont)

Compound	Ground water (μg/L)	Soil/Solid (μg/kg)
5-Nitro-2-methylaniline	10	ND
4-Nitroquinoline-1-oxide	40	ND
N-Nitrosodibutylamine	10	ND
N-Nitrosodiethylamine	20	ND
N-Nitrosodiphenylamine	10	660
N-Nitroso-di-n-propylamine	10	660
N-Nitrosopiperidine	20	ND
N-Nitrosopyrrolidine	40	ND
Octamethyl pyrophosphoramide	200	ND
4,4'-Oxydianiline	20	ND
Parathion	10	ND
Pentachlorobenzene	10	ND
Pentachloronitrobenzene	20	ND
Pentachlorophenol	50	3300
Phenacetin	20	ND
Phenanthrene	10	660
Phenobarbital	10	ND
Phenol	10	660
1,4-Phenylenediamine	10	ND
Phorate	10	ND
Phosphamidon	100	ND
Phthalic anhydride	100	ND
Pronamide	10	ND
Propylthiouracil	100	ND
Pyrene	10	660
Pyridine	ND	ND

TABLE XII. (cont)

Compound	Ground water (μg/L)	Soil/Solid (μg/kg)
Resorcinol	100	ND
Safrole	10	ND
Strychnine	40	ND
Sulfallate	10	ND
Terbufos	20	ND
1,2,4,5-Tetrachlorobenzene	10	ND
2,3,4,6-Tetrachlorophenol	10	ND
Tetrachlorvinphos	20	ND
Tetraethyl pyrophosphate	40	ND
Thionazine	20	ND
Thiophenol (benzenethiol)	20	ND
Toluene diisocyanate	100	ND
o-Toluidine	10	ND
1,2,4-Trichlorobenzene	10	660
2,4,5-Trichlorophenol	10	660
2,4,6-Trichlorophenol	10	660
Trifluralin	10	ND
2,4,5-Trimethylaniline	10	ND
Tris(2,3-dibromopropyl) phosphate	200	ND
Tri-p-tolyl phosphate (h)	10	ND
O,O,O-Triethylphosphorothioate	NT	ND

a Soil/sediment PQLs are based upon a 30.0 g sample aliquot, wet weight, and GPC cleanup. When concentrations are reported on a dry weight basis the PQL will be higher.

TABLE XII. (cont)

b These values are for guidance only and may not always be achievable. Analyte recoveries are highly matrix dependent.

c ND = Not determined

d NA = Not applicable

SEMIVOLATILE ORGANICS IN AQUEOUS MATRICES: SOLVENT EXTRACTION — GC/MS

Analyte: Base Neutral/Acid extractables (BNAs)	**Method No.:** EO530
Matrix: Water, aqueous waste	**Minimum Detection Limit:** 10.0-50.0 μg/L nominal (matrix dependent)
Procedure: Extraction and concentration of analytes with an appropriate solvent followed by capillary column GC/MS analysis.	**Accuracy and Precision:** These parameters are analyte dependent and are greatly influenced by the nature of the matrix.
Effective Date: 10/01/90	**Authors:** Martin W. Koby Matthew Monagle

SAFETY NOTE: Before beginning this procedure, read all of the Material Safety Data Sheets for the chemicals listed in Sec. 8. Read Sec. 4.3 of the EM-9 Safety Manual for information on personal protective clothing and equipment. Read Sec. 18 of this procedure and Source Material 19.4 for proper waste disposal practices.

1. Principle of Method

1.1. Analytes are extracted from aqueous samples with methylene chloride. Extraction is performed under strongly basic (pH >12) and strongly acidic (pH <2) conditions, producing in two solvent fractions per sample. Extracts are then combined and concentrated to a small final volume (typically 1.0 mL), cleaned by alumina and/or gel permeation chromatography, and analyzed by gas chromatography/mass spectrometry. The mass spectrometer is operated in a scanning, electron impact (EI) ionization mode. The gas chromatograph is temperature programmed to effectively separate the wide range of analytes.

Analytes from a wide variety of compound classes can be determined using this method. Table XII contains a list of semivolatile organic analytes and their corresponding quantitation limits for which this procedure may be applicable. Table X lists the compounds normally analyzed for by EM-9 (Hazardous Substance List). Additional compounds may be analyzed for upon request. (Tables IX - XII are found at the end of this procedure.)

1.2. Qualitative analysis is performed by comparing retention time and mass spectral data of unknowns to those of a standard mix for which the analytical system has been calibrated. USEPA-defined criteria (SW-846, Source Material 19.2) are used to establish the validity of a compound identity.

1.3. Quantitation is achieved using the internal standard technique. Once the identity of a compound is determined, quantitation is based on the integrated abundance of the extracted ion chromatogram (EIC) of the primary characteristic ion (PCI) for that compound. This value is compared to integrated abundance of the EIC of the PCI for the internal standard nearest the retention time of a given analyte. Additional factors taken into account include the response factor of the compound being measured, the final volume of extract, and the sample aliquot extracted.

2. Sensitivity

2.1. Practical limits of quantitation are generally in the range of 10.0 μg/L to 50 μg/L for low-level aqueous matrices. Matrices which are relatively free of interferences have lower attainable limits of detection than those having large amounts of coextractible material, such as drum waste. Medium-level extracts have a nominal detection limit of 1000 μg/kg.

2.2. The values in 2.1 are analyte dependent and can be greatly influenced by matrix constituents, sample inlet conditions, and general analyte reactivity. Response factors for standards tend to show linearity to 180 μg/mL, but specific compounds may show decreasing chromatographic performance or detector saturation at this concentration.

3. Accuracy and Precision

3.1. Based upon surrogate and spike data, analyte recoveries are typically in the 60-110% range. Recoveries can be expected to vary depending upon the analyte and matrix complexity.

3.2. Long-range precision data is based upon matrix spike and spike duplicate percent recovery and the relative percent difference between the two. Refer to Section 16, Table VIII.

4. Interferences

4.1. Any material that will cause an increase in background signal or elevated baseline or result in discrete chromatographic peaks which are not attributable to target compounds may interfere with the identification and quantitation of a given analyte. Environmental matrices containing high concentrations of humic material, oils, hydrocarbons, lipids, sulfur, or polar material such as alcohols and carboxylic acids meet the preceding description.

4.2. Excessive particulate matter in water, extreme alkalinity or acidity, reactive material, intense light, and high temperature can negatively affect analyte recovery.

5. Sample Collection and Storage

5.1. All sampling equipment should be free of introduced contaminants.

5.2. Water samples are typically collected in amber or clear glass wide mouth bottles. Caps should have Teflon liners; however, aluminum foil can be substituted for Teflon if necessary. Excessive headspace should be avoided.

5.3. Samples should be stored, unpreserved, in a refrigerator at 4°C until extraction is initiated.

6. Sample Holding Times

6.1. Water samples must be extracted within 7 d of receipt.

6.2. Sample extracts must be analyzed within 40 d of extraction.

7. Apparatus

7.1. Gas chromatograph/mass spectrometer: GC capable of temperature programming from 25-300°C. The mass spectrometer, using electron impact ionization, must be capable of scanning a mass range of 35-500 AMU in 1.0 s or less.

7.2. Data system: capable of initiating and controlling data acquisition, storing spectral and chromatographic data, and performing mass spectral library searches.

7.3. Chromatographic column: 5% methyl phenyl silicone, 30-m x 0.25-mm-i.d x 0.5-micron film thickness, J&W DB-5.625 or equivalent.

7.4. Semiautomated gel permeation chromatograph (GPC): capable of uninterrupted multiextract processing. GPC Autoprep model 1002B, Analytical Bio-chemistry Laboratories, Inc. The column packing material used for this application is 70 g of 3% crosslinked styrene divinyl benzene (SX-3 BioBeads, Biorad Corp.).

7.5. Refrigerated recirculating heat exchanger: Neslab Coolflow CFT-33 or equivalent.

7.6. Ultracentrifuge: with rotor capable of holding six 250-mL bottles.

7.7. Nitrogen evaporation apparatus with multiple sample capacity: Organomation N-EVAP, Model 111 or equivalent.

7.8. Concentric ring steam table: 4- or 8-hole, Boekel, Inc. or equivalent.

7.9. Automated evaporative concentrator: Zymark Turbovap or equivalent may be substituted for items 7.9 and 7.10.

7.10. Continuous Liquid/Liquid extractors: 1- or 2-L capacity, available from Precision Glassblowing, Englewood, Colorado.

7.11. Kuderna-Danish concentrators: consisting of 500-mL flask, 15-mL calibrated receiver tube, and three-ball Snyder column.

7.12. Condensers: glass, 300-mm jacket, Allihn bulb type with 55/50 ground glass joint.

7.13. Separatory funnels: 2-L, glass, with Teflon stopcocks.

7.14. Glass filtering funnels.

7.15. Centrifuge bottles: 250-mL, heavy wall.

7.16. Round bottom flasks: 500-mL, glass, 24/40 joint.

7.17. Beakers: glass, 100-, 150-, 250-, 400-, and 600-mL capacity.

7.18. Glass vials: 1.8-mL crimp cap, 1.8-, 7-, 10-, 12-, 15-, and 40-mL capacity screw cap with septa.

7.19. Volumetric glassware: 1-, 2-, 5-, 10-, 25-, 50-, 100-, and 250-mL with stoppers.

7.20. Disposable glass pipettes: 1-, 2-, 5-, and 10-mL.

7.21. Adjustable low-volume pipettors: 10- to 250-μL capacity with disposable capillary tips SMI brand or equivalent.

7.22. Syringes: glass, gas-tight, 10-, 25-, 50-, and 100-μL volume.

7.23. Heating mantles: 500-mL, Glas-col STM or equivalent.

7.24. Teflon boiling stones.

7.25. Glass wool.

7.26. Jack stands: 6 in. by 6 in.

7.27. Aluminum foil.

7.28. Wide range pH indicator strips.

7.29. Oven: capable of being heated to 500°C.

7.30. Muffle furnace: capable of being heated to 900°C.

8. Reagents

8.1. Methylene chloride (Baker resi-analyzed).

8.2. Acetone (Baker resi-analyzed).

8.3. Methanol (HPLC-grade).

8.4. Hexane (pesticide-grade).

8.5. Reagent water (deionized). Charcoal filtered and/or distilled water demonstrated to be free from interferences.

8.6. Sodium sulfate (granular). Muffle overnight at 400°C. Alternatively, it can be Soxhlet-extracted with methylene chloride before use. Store in a covered container.

8.7. Sulfuric acid (diluted 1:1 with reagent water). While mixing, slowly add 500 mL of concentrated sulfuric acid to 400 mL of reagent water in a 1-L volumetric flask. Allow to cool to room temperature and dilute to volume. Store in a properly labeled covered container.

8.8. Sodium sulfate (10 N). Slowly add 40.0 g granular Na_2SO_4 to reagent water in a 100-mL volumetric flask while mixing. Allow to cool and dilute to volume. Store in a properly labeled covered container.

8.9. Alumina (Woelm Neutral Super I, ICN brand). Muffle for 4 h at 140°C and store in a desiccator before use. Deactivate to activity level III by adding 7% water (vol/wt) and shaking on a wrist action shaker for 2 h.

8.10. Bio Beads SX-3. Soak 70 g in methylene chloride overnight to facilitate swelling of the resin. Pack the column, establish flow and pressure, and allow to equilibrate with CH_2Cl_2 for 24 h before to calibration and use.

9. Standards

9.1. Stock standards are solutions of analytes, internal standards or surrogates at relatively high concentrations which are used to prepare working standards. They are refrigerated at 4°C or below and have a shelf life of 6 months to one year, or until degradation is apparent. Stock standards are usually obtained commercially. Working standards are prepared from stocks and are used directly for instrument calibration or spiking into samples or extracts. Working

standards are stored at -10°C to -20°C and must not be used after 90 d from preparation.

Table I lists the analytical working standards specified by EPA protocol to be used in the analysis of base/neutral acid extractables. They are readily available from any number of chemical suppliers as neat standards or as stock solutions. Currently, we use standard mixes formulated by Ultra Scientific, Inc.

TABLE I. BASE/NEUTRAL/ACID ANALYTICAL STANDARDS

Standard name	Components	Conc. (μg/mL)	Solvent
BNA surrogate mix	2-Fluorophenol (acid)	100.0	Methanol
	Phenol-d_5 (acid)	100.0	
	Nitrobenzene-d_8 (B/N)	50.0	
	2-Fluorobiphenyl (B/N)	50.0	
	2,4,6-Tribromophenol (acid)	100.0	
	Terphenyl-d_{14} (B/N)	50.0	
BNA matrix spike mix	Phenol	100.0	Methanol
	2-Chlorophenol	100.0	
	1,4-Dichlorobenzene	50.0	
	N-Nitroso-di-n-propylamine	50.0	
	1,2,4-Trichlorobenzene	50.0	
	4-Chloro-3-methylphenol	100.0	
	Acenaphthene	50.0	
	4-Nitrophenol	100.0	
	2,4-Dinitrotoluene	50.0	
	Pentachlorophenol	100.0	
	Pyrene	50.0	

TABLE I. (cont)

Standard name	Components	Conc. (μg/mL)	Solvent
Internal standard mix	1,4-Dichlorobenzene-d_4	4000	Methylene chloride
	Naphthalene-d_8	4000	
	Acenaphthene-d_{10}	4000	
	Phenanthrene-d_{10}	4000	
	Chrysene-d_{12}	4000	
	Perylene-d_{12}	4000	
DFTPP	Decafluorotriphenylphosphine	50.0	Methylene chloride
Initial calibration mix	See Table X	20.0 50.0	Methylene chloride
		80.0	
		120.0	
		160.0	
Daily calibration mix	See Table X	50.0	Methylene chloride
Alumina equivalency standard	See BNA surrogate	50/100	50% Hexane/ acetone

9.2. Surrogate compounds. The surrogates closely resemble target compounds chemically but are not normally encountered in nature. Before extraction, each sample is fortified with a known concentration of surrogate mix. Evaluating recoveries gives a measure of the method efficiency relative to any given matrix.

9.3. Matrix spike compounds. These compounds are used to document analytical precision and accuracy, the objective being to identify trends in method performance on both a long- and short-term basis. Specific analytes have been designated to be used as matrix spike compounds. Known concentrations of

matrix spike solution are added to duplicate representative samples before extraction. Matrix spike and spike duplicate data is generated at least once for every 20 samples analyzed.

9.4. Internal Standards (ISs). The IS compounds are added to extracts immediately before instrumental analysis. They are used to facilitate both qualitative and quantitative analysis. Extracts are spiked with IS mix so that a final concentration of 40 μg/mL of each component is obtained.

9.5. Decafluorotriphenylphosphine (DFTPP). DFTPP is used to verify the performance of the mass spectrometer. The DFTPP spectrum must meet established EPA ion abundance criteria before calibrating the instrument and analyzing samples. The working standard DFTPP concentration is 50 μg/mL in CH_2Cl_2. DFTPP can be added to the daily calibration standard.

9.6. Initial calibration standards. These standards contain all target compounds of interest at five different concentrations. Typically, these are 20.0, 50.0, 80.0, 120.0, and 160.0 μg/mL of each analyte. The standards are made by volumetric dilution of 2000 μg/mL stock standards with methylene chloride. Appropriate amounts of internal standards and surrogates are included.

9.7. Daily calibration standards. The standards contain 50.0 μg/mL of all target compounds of interest in methylene chloride. They are used to demonstrate instrument stability in terms of analyte response (response factor) and relative retention time.

9.8. Alumina equivalency standard. This standard is prepared in the same manner as the BNA surrogate standard working solution except 50:50 hexane/acetone is used as the solvent. It is used to evaluate the efficiency of the alumina column cleanup when used.

10. Sample Extraction

Because of the variety of matrices, preparation steps, and procedures available, each will be documented as a unique method in the following section.

CAUTION: These procedures use large quantities of methylene chloride, a suspected carcinogen. Wear appropriate personal protective equipment, use safe work practices, and perform all procedures in a fume hood.

10.1. Extracting low-level BNAs in water and waste water by continuous liquid/liquid extraction (CLLE).

10.1.1. Assemble the extractors. Rinse all glassware with methylene chloride and allow to dry before using. Discard rinse in a properly labeled waste container.

10.1.2. Place the extractor in a support and attach a 500-mL round bottom flask containing Teflon boiling stones and 250 mL of CH_2Cl_2. Position the round bottom flask in a heating mantle. Pour 250 mL CH_2Cl_2 into the extractor body.

10.1.3. Shake the sample container to suspend any particulate material and to homogenize the sample.

10.1.4. Determine the initial sample pH by removing approximately 1.0 mL of sample with a Pasteur pipette and wetting a wide range pH indicator strip. Record this measurement on the sample preparation benchsheet.

10.1.5. Pour the sample into a 1000-mL graduated cylinder and record the volume to the nearest 5 mL. The recommended sample volume is 1.0 L but in practice may be slightly less.

10.1.6. Transfer the sample to an assembled extractor containing 250 mL of methylene chloride. This should be done slowly to avoid getting water into the narrow side arm or round bottom flask.

10.1.7. Add 1.0 mL of BNA surrogate mix to all samples with a disposable pipette. Ensure that the pipette tip is below the liquid surface when transferring this mixture. Stir thoroughly. Repeat with BNA matrix spiking solution where required.

10.1.8. Add enough reagent water to the extractor to allow it to function properly. Adjust the pH to >12 with 10 N sodium hydroxide (6 mL should be sufficient). If more than 10 mL is required, make a notation on the sample prep anomaly form.

10.1.9. Place the condenser on the extractor, turn on the heating mantle, check all joints for leakage, and reflux for 18 h. The round bottom flask will contain the base-neutral compounds.

10.1.10. After refluxing, allow the round bottom flask to cool to ambient temperature, remove, cover, and refrigerate until ready to concentrate. Attach another round bottom flask containing 250 mL of CH_2Cl_2 and boiling stones. Adjust the sample pH to < 2 with 50:50 sulfuric acid (5 mL should be sufficient). Make note of any sample requiring excessive acid to reach this endpoint.

10.1.11. Reflux for an additional 18 h. The contents of this round bottom flask contain the acid extractables. Cover and refrigerate the flask until ready to concentrate the extract.

10.1.12. Proceed to extract concentration, Section 12.

10.2. Extracting low-level BNAs in water by separatory funnel shakeout.

NOTE: The preferred extraction method is CCLE (Step 10.1). The separatory funnel shakeout may not be used for mixed-waste samples.

10.2.1. Rinse all glassware with methylene chloride and allow to dry before use.

10.2.2. Shake the sample container to homogenize and suspend the sediment.

10.2.3. Determine the initial sample pH by removing 1.0 mL with a Pasteur pipette and wetting a wide range pH indicator strip. Record the measurement on the sample preparation benchsheet.

10.2.4. Transfer the sample to a 1.0-L graduated cylinder and record the volume to the nearest 5.0 mL. Recommended sample volume is 1.0 L but in practice may be slightly less.

10.2.5. Pour the sample aliquots into 2.0-L separatory funnels fitted with Teflon stopcocks and glass stoppers. Using a disposable glass pipette, add 1.0 mL of surrogate standard mix to all samples and blanks. Add 1.0 mL of matrix spike mix to the appropriate samples in a similar manner. Ensure that the pipette tip is below the liquid surface and stir immediately.

10.2.6. Adjust the sample pH to >12 with approximately 6.0 mL of 10 N sodium hydroxide. Any sample that requires the addition of excessive base should be noted on the sample prep anomaly form.

10.2.7. Add 60 mL of methylene chloride to all separatory funnels.

CAUTION: Methylene chloride is extremely volatile. Pressure within the separatory funnel will build rapidly, requiring frequent venting.

Shake each funnel for 2 min, venting as necessary. Allow the phases to separate. If an emulsion forms, use whatever means are necessary to separate the phases. If this cannot be done, the sample and the methylene chloride should be transferred to a continous liquid-liquid extractor to complete sample extraction.

10.2.8. After phase separation is complete, draw the methylene chloride (lower layer) into a 500-mL Erlenmeyer flask or 400-mL beaker. Cover with aluminum foil.

10.2.9. Repeat this extraction two more times and combine the extracts (do not re-spike surrogates or matrix spikes). This fraction contains the base/neutral analytes.

10.2.10. Adjust the sample pH to <2 with 50% sulfuric acid. This should require approximately 5.0 mL. Any sample requiring excessive amounts of acid to reach this endpoint should be noted on the sample prep anomaly form.

10.2.11. Extract the sample three more times with 60-mL portions of methylene chloride. Combine these extracts with the base/neutral fraction or, optionally, keep separate if either fraction contains large amounts of coextracted material.

10.2.12. If water is present in the organic phase, a small amount of granular sodium sulfate can be added to the flask to facilitate drying.

10.2.13. Cover the flasks with aluminum foil and refrigerate until the extracts can be concentrated as described in Section 12.

10.3. Extracting low-level BNAs and organochlorine pesticides from aqueous matrices using continuous liquid/liquid extraction (CLLE).

EPA Contract Laboratory Program (EPA-CLP) semivolatile analytical protocol allows for the simultaneous extraction of base/neutral acid extractables, PCBs, and organochlorine pesticides. Once the extract has been concentrated to 10 mL, it is split and further manipulated to enable analysis for organochlorine pesticides and PCBs by GC/ECD and GC/MS.

10.3.1. Rinse all glassware with solvent before use.

10.3.2. Assemble the extractors. Rinse all glassware with methylene chloride and allow to dry before use. Discard the rinse in a properly labeled waste container.

10.3.3. Place the extractor in a support and attach a 500-mL round bottom flask containing Teflon boiling stones and 250 mL of CH_2Cl_2 . Position the round bottom flask in a heating mantle. Pour 250 mL of CH_2Cl_2 into the extractor body.

10.3.4. Shake the sample container to suspend any particulate material and to homogenize the sample.

10.3.5. Determine the initial sample pH by removing approximately 1.0-mL of sample with a Pasteur pipette and wetting a wide range pH indicator strip. Record this measurement on the sample preparation benchsheet.

10.3.6. Pour the sample into a 1000-mL graduated cylinder and record the volume to the nearest 5 mL. The recommended sample volume is 1.0 L but in practice may be slightly less.

10.3.7. Transfer the sample to an assembled extractor containing 250 mL of methylene chloride. This should be done slowly to avoid getting water into the narrow side arm or round bottom flask.

10.3.8. Add 1.0 mL of BNA surrogate mix to all samples, using a disposable pipette. Ensure that the pipette tip is below the liquid surface when transferring this mixture. Stir thoroughly. Repeat with the BNA matrix spiking solution where required.

10.3.9. In an identical manner add pesticide surrogate and spike mixes where appropriate.

10.3.10. Add enough reagent water to the extractor to allow it to function properly. Adjust the pH to >12 with 10 N sodium hydroxide (6 mL should be sufficient). If more than 10 mL is required, make a notation on the sample prep anomaly form.

10.3.11. Place the condenser on the extractor, turn on heating mantle, check all joints for leakage, and reflux for 18 h. The round bottom flask will contain the base-neutral compounds.

10.3.12. After refluxing, allow the round bottom flask to cool to ambient temperature, remove, cover, and refrigerate until ready to concentrate. Attach another round bottom flask containing 250 mL of CH_2Cl_2 and boiling stones. Adjust the sample pH to <2 with 50:50 sulfuric acid (5 mL should be sufficient). Make note of any sample requiring excessive acid to reach this endpoint.

10.3.13. Reflux for an additional 18 h. The contents of this round bottom flask contain the acid extractables. Cover and refrigerate the flask until ready to concentrate the extract.

10.3.14. Proceed to extract concentration, Section 12.

11. Sample Preparation: Dilution of an Organic Waste.

11.1. Infrequently, a matrix such as drum waste is encountered which can be analyzed by direct injection. This requires minimal sample preparation and generally includes simple dilution with an appropriate solvent.

11.2. Dilution is necessary to avoid overloading the detector and to minimize contamination of the analytical system.

12. Concentration of Extracts from Aqueous Matrices

Traditional Kuderna-Danish (KD) and nitrogen evaporation techniques.

12.1. Rinse all glassware with solvent before use.

12.2. Attach a 15-mL receiver tube to a 500-mL KD flask and add one Teflon boiling stone.

12.3. Place a small pad of glass wool in the bottom of a glass funnel (Kimax 58 or equivalent). Add granular sodium sulfate until the funnel is 2/3 full and tap to settle the granules. Pre-rinse the Na_2SO_4 with methylene chloride.

12.4. Quantitatively transfer the base/neutral fraction to the KD concentrator by pouring it through the sodium sulfate. Complete the transfer by rinsing the extract container and the funnel with methylene chloride (approximately 20 mL). Do not discard the funnel containing sodium sulfate, as it will be used to dry the subsequent acid fraction.

12.5. Attach a three-ball Snyder column to the KD and place it on a hot water bath (75-90°C). Immediately pre-wet the Snyder column with several mL of methylene chloride to prevent sample bumping.

12.6. Concentrate the extract to an apparent volume of 10 mL and remove from heat. Allow the KD concentrator to drain and cool to ambient temperature before removing the Snyder column.

12.7. Quantitatively transfer the acid fraction to the KD concentrator by pouring it through the same funnel used for the base/neutral fraction. Complete the transfer by rinsing the extract container and funnel with methylene chloride. Add a fresh Teflon boiling stone to the flask and reattach the Snyder column.

12.8. Return the KD to the water bath and immediately wet the column with methylene chloride to prevent bumping.

12.9. Concentrate the extract to an apparent volume of 4.0 mL and remove from heat. Do not permit the extract to go dry because many analytes are sensitive to thermal degradation. Allow the KD concentrator to drain and cool to ambient temperature.

12.10. Invert the Snyder column and rinse it with a small amount (about 2.0 mL) of methylene chloride. Collect the rinse in the KD flask. Rinse the inside walls of the KD flask one more time with a small amount of methylene chloride. Collect rinse in the receiver tube.

12.11. Place the receiver tube in a water bath that is near, but below, the boiling point of the solvent. Direct a gentle stream of dry nitrogen over the surface of the

solvent. Periodically rinse the inside walls of the receiver tube with methylene chloride to prevent loss of analyte. Allow the extract to evaporate to a volume of approximately 0.5 mL and remove from the bath.

Occasionally an extract will stop evaporating, form a precipitate, or be highly colored. In these instances concentrate the extract to 10.0 mL and clean it using gel permeation chromatography (GPC) (refer to Method EO520).

12.12. If the extract has evaporated to 0.5 mL, quantitatively transfer the extract to a 1.0-mL volumetric tube and dilute to volume with methylene chloride. Transfer the concentrated extract to a 1.8-mL screw cap vial which has been appropriately labeled. Refrigerate at 4°C until ready to analyze.

13. Extract Split

Used for low-level BNAs and organochlorine pesticides in water. Following the procedure described in Section 12, concentrate the gross extract to 10.0 mL with methylene chloride. If an extract is highly colored or contains large amounts of coextracted interference, it needs to be cleaned by GPC according to Method EO520 before splitting. Once GPC cleaning is complete, proceed with this section.

13.1. With an SMI micropipette, transfer 500 μL of the 10.0-mL extract to a receiver tube containing 5.0 mL of hexane and mix thoroughly. This is the pesticide fraction.

13.2. Using nitrogen blowdown, concentrate the remaining 9.5 mL to 0.95 mL of methylene chloride. This is the BNA fraction.

13.3. Complete the split and solvent exchange by concentrating the pesticide fraction to 0.5 mL of hexane.

NOTE: Start nitrogen evaporation with the bath temperature at 40°C. After 5 min, increase the temperature to 65°C and continue concentrating, occasionally rinsing the tubes with hexane.

13.4. Remove the receiver tubes from the bath and allow to cool. Add 0.5 mL of acetone to each tube to give a total volume of 1.0 mL. Clean the pesticide fraction by alumina column chromatography. Refer to Section 14.

14. Pesticide Fraction Cleanup

Alumina column chromatography. Adsorption chromatography relies on the ability of solid material to retain solute by surface adsorption. The adsorbed material can then be selectively eluted depending upon the organic solvent chosen, analyte solubility, and polarity.

A neutral alumina cleanup is used to remove the BNA surrogates from the pesticide fraction of extracts which have been split for BNA/OCP analysis.

14.1. Prepare Super I neutral alumina to activity III by adding 7% reagent water (vol/wt) to the alumina. In a tightly sealed glass container, shake on a wrist action shaker for 2 h or shake vigorously by hand for 5-10 min. No lumps should be present.

14.2. Loosely plug a 10-mL disposable glass pipette with glass wool. Add 3.0 g of activity III alumina and tap to settle. Do not pre-wet the alumina.

14.3. With a Pasteur pipette, add the entire 1.0 mL extract to the top of the alumina and immediately rinse the concentrator tube with 1.0 mL hexane. Add this rinse to the alumina. Collect the eluate in another clean receiver tube. Continue eluting the alumina with 9.0 mL of hexane. Do not allow the column to go dry during addition and elution of the sample extract.

14.4. Concentrate the eluate to 1.0 mL using nitrogen blowdown techniques. Transfer the extract to an appropriately labeled 1.8-mL screw cap vial and refrigerate at 4°C until ready to analyze.

15. GC/MS Calibration

15.1. This application uses a slightly polar methyl silicone stationary phase bonded to a fused silica capillary column such as the J&W DB-5.625, Supelco SPB-5, or Quadrex 007-2. Column dimensions are nominally 30-m x 0.25-mm-i.d., 0.50-μm film thickness.

15.2. The following approximate gas chromatographic parameters are used for data acquisition. These parameters may change in order to optimize chromatography on a given analytical system:

Initial temp: 35°C	Carrier: He
Initial time: 4.5 min.	Flow: 1.0 mL/min.
Final temp: 290°C	Inlet temp: 280°C
Final time: 15 min.	Interface temp: 300°C
Rate: 10°C/min.	

15.3. DFTPP tuning.

15.3.1. The quadrupole mass spectrometer is operated in a scanning, electron impact ionization mode. The spectrometer is hardware-tuned with a calibration compound perfluorotributylamine (PFTBA) such that a 50-ng injection of decafluorotriphenylphosphine (DFTPP) results in a spectrum which satisfies the key ion abundance and resolution criteria listed in Table II.

TABLE II. KEY ION ABUNDANCE AND RESOLUTION CRITERIA	
Mass	Ion abundance criteria
51	30.0-60.0% mass 198
68	< 2.0% of mass 69
70	< 2.0% of mass 69
127	40.0-60.0% of mass 198
197	< 1.0% of mass 198
198	base peak, 100% relative abundance
199	5.0-9.0% of mass 198
275	10.0-30.0% of mass 198
365	> 1.00% of mass 198
441	present but less than mass 443
442	> 40.0% of mass 198
443	17.0-23.0% of mass 442

15.3.2. Before any standards or samples are analyzed, these tuning criteria must be met and documented for each mass spectrometer used for this application. The criteria must be demonstrated every 12 h. Specifically, no standards, samples, or QC samples may be injected after 12 h from the injection time of DFTPP. DFTPP may be combined with the continuing calibration standard.

15.3.3. If the ion abundance criteria are not met, corrective actions, such as re-tuning, are taken. Failure to meet DFTPP criteria may indicate the need to clean the analyzer source.

15.4. Initial calibration.

15.4.1. Once the mass spectrometer is hardware-tuned, it must be initially calibrated with a minimum of five standard concentrations to demonstrate response linearity. Table III lists those analytes requiring only four initial calibration points. Analyze standards at concentrations of 20, 50, 80, 120, and 160 μg/mL. The five-point calibration must meet response factor criteria specified by the USEPA. The initial calibration must be run when the continuing calibration fails or when the analytical system is significantly changed, such as when a new column is installed or when the analyzer source is cleaned.

TABLE III. COMPOUNDS REQUIRING A FOUR-POINT CALIBRATION (USEPA-CLP SOW 2/88)	
Benzoic acid	2,4-Dinitrophenol
2,4,5-Trichlorophenol	2-Nitroaniline
3-Nitroaniline	4-Nitroaniline
4-Nitrophenol	Pentachlorophenol
4,6-Dinitro-2-methylphenol	

15.4.2. Calculate response factors (RF) for all individual calibration compounds. The percent relative standard deviation (% RSD) for each compound should be less than 30% and must be less than 30% for all calibration check compounds (CCC). See Table IV.

TABLE IV. CONTINUING CALIBRATION CHECK COMPOUNDS (CCC)	
% RSD MUST BE <30.0	
Acenaphthene	4-Chloro-3-methylphenol
1,4-Dichlorobenzene	2,4-Dichlorophenol
Hexachlorobutadiene	2-Nitrophenol
N-Nitrosodiphenylamine	Phenol
Di-n-octyl phthalate	Pentachlorophenol
Fluoranthene	2,4,6-Trichlorophenol
Benzo(a)pyrene	

Response factors are calculated using the following equation:

$$RF = \frac{(Ax)\ (Cis)}{(Ais)\ (Cx)} ,$$

where Ax = area of the characteristic ion for the compound being measured,

Cis = concentration of the internal standard (ng/μL),

Ais = area of the characteristic ion for the nearest internal standard, and

Cx = concentration of the compound being measured (ng/μL).

Percent relative standard deviation is calculated using the following equation:

$$\%RSD = \frac{(SD)}{(RF)} \times 100$$

15.4.3. The minimum average response for system performance check compounds (SPCCs) must be 0.050 or greater. Table V contains a list of these compounds.

TABLE V. SYSTEM PERFORMANCE CHECK COMPOUNDS (SPCC)—AVERAGE RF MUST BE >0.05
N-Nitroso-di-n-propylamine
Hexachlorocyclopentadiene
2,4-Dinitrophenol
4-Nitrophenol

15.4.4. Relative retention times of each compound from each standard should agree within 0.06 retention time units.

15.4.5. If the preceding criteria are not met, corrective actions must be taken. The individual curve points or the entire curve is reanalyzed.

15.5. Continuing calibration.

Every day, a continuing calibration standard containing 50 μg/mL of each target analyte is analyzed. The relative response factor for each analyte is compared with the corresponding average responses factor obtained from the initial calibration. The continuing calibration must be analyzed within the 12-h DFTPP performance check period.

15.5.1. Each continuing calibration must meet the following criteria:

15.5.1.1. All system performance check compounds must have a minimum response factor not less than 0.050. Refer to Table V.

15.5.1.2. The percent difference between the continuing calibration relative response factor and the average relative response from the initial calibration must not be greater than 25% for any CCC. Table IV lists these analytes. If this requirement is met the calibration is assumed to be valid.

The percent difference is calculated using the following equation:

$$\% \text{ Diff} = \frac{RFi - RFc}{RFi} \times 100 \quad ,$$

where RFi = average response factor from the initial calibration, and
RFc = response factor from the current continuing calibration.

15.5.1.3. The percent difference between the continuing calibration relative response factor and the average relative response from the initial calibration should not be greater than 20% for any target compound for which the instrument is calibrated. If the percent difference exceeds this value it is considered as a warning limit.

15.5.2. If the preceding calibration criteria are not met, corrective action is taken and the continuing calibration standard is reanalyzed. If the criteria are still not met, a new five-point initial calibration is performed.

15.5.3. Once all continuing calibration criteria have been met, the method ID file is updated with the current response factors (RFs) and retention times before acquiring and processing sample data.

15.5.4. The method ID file contains retention-time and mass-spectral data pertinent to a given target compound list. It is defined and edited by the user and resides on the GC/MS data system.

16. Quality Assurance and Data Interpretation Requirements

16.1. All calibration criteria listed in the previous section must be met before samples are analyzed.

16.2. Method blank analysis. A method blank is a volume of reagent water or a purified solid material which is taken through the entire analytical procedure. The weight or volume of the blank must approximate that of samples being analyzed. The criteria listed below are checked directly after blank analysis.

16.2.1. Blanks are analyzed at a frequency of one for every 20 samples of similar matrix or whenever samples are extracted by the same procedure, whichever is more frequent.

16.2.2. The method blank should contain less than five times the practical quantitation limit (PQL) of phthalate esters in the target compound list.

16.2.3. All other analytes present on the target compound list should not be present at concentrations greater than the PQL.

16.2.4. Recovery of all surrogate compounds must be within specified limits (Table VI). If these criteria is not met, reanalyze or reextract another blank to determine whether the incident is isolated or an out-of-control status exists.

16.3. Surrogate spike requirements. Each sample prepared and analyzed for semivolatile compounds is fortified with known amounts of base/neutral and acid extractable compounds. By evaluating their recovery, measured as a percentage, the analyst can draw conclusions concerning the analytical efficiency on a sample-by-sample basis.

16.3.1. Surrogate spike recoveries are considered to be acceptable if they fall within the ranges specified in Table VI.

Surrogate recovery from samples must meet two conditions to be considered unacceptable: (1) recovery of any one surrogate in either the base-neutral or acid fraction is less than 10% and (2) recoveries of any two surrogate compounds in either the base/neutral or acid fraction are out of recovery limits.

TABLE VI. BNA SURROGATE SPIKE PECOVERY LIMITS IN PERCENT		
Surrogate Compound	Water	Soil
Nitrobenzene-d_5	35-114	23-120
2-Fluorobiphenyl	43-116	30-115
Terphenyl-d_{14}	33-141	18-137
Phenol-d_5	10-94	24-113
2-Fluorophenol	21-100	25-121
2,4,6-Tribromophenol	10-123	19-122

16.3.2. When surrogate spike recoveries are determined to be out of control, the analyst needs to determine if the cause is matrix- or process-dependent. Whichever conclusion is reached needs to be addressed in the case narrative and/or anomaly summary. Corrective action will be implemented to alleviate the causes of the out-of-control condition.

16.4. Matrix spike and matrix spike duplicate recovery requirements. In order to evaluate the matrix effect of a sample upon the analytical methodology employed, known concentrations of base/neutral and acid target compounds are added to duplicates of a given sample. Table VII is a list of spike compounds. The sample chosen to be spiked should be representative of the samples from a given project. Reagent water is frequently used as a spiking medium for aqueous samples.

TABLE VII. BNA MATRIX SPIKE COMPOUNDS		
Compound	Fraction	Amount added (μg)
1,2,4-Trichlorobenzene	BN	50
Acenaphthene	BN	50
2,4-Dinitrotoluene	BN	50
Pyrene	BN	50
N-Nitroso-di-n-propylamine	BN	50
1,4-Dichlorobenzene	BN	50
Pentachlorophenol	ACID	100

TABLE VII. (cont)		
Compound	Fraction	Amount added (μg)
Phenol	ACID	100
2-Chlorophenol	ACID	100
4-Chloro-3-methylphenol	ACID	100
4-Nitrophenol	ACID	100

16.4.1. Matrix spike and matrix spike duplicate data are generated once for every 20 samples of a given matrix type prepared by the same method.

16.4.2. Matrix spike/matrix spike duplicates and the original unspiked sample must be concentrated to the same final volume and analyzed at the same dilution level. However, do not dilute matrix spike/matrix spike duplicate samples for non-spiked target compounds.

16.4.3. Spike recovery is evaluated in terms of percent recovery and the relative percent difference (RPD) between individual spike compounds in the MS and MSD. This data can be used to evaluate the long term precision and accuracy of the method. Table VIII gives spike recovery limits.

TABLE VIII. BNA MATRIX SPIKE RECOVERY LIMITS - WATER

Compound	% Recovered	RPD
1,2,4-Trichlorobenzene	39 - 98	28
Acenaphthene	46 - 118	31
2,4-Dinitrotoluene	24 - 96	38
Pyrene	26 - 127	31
N-Nitroso-di-n-propylamine	41 - 116	38
1,4-Dichlorobenzene	36 - 97	28
Pentachlorophenol	9 - 103	50
Phenol	12 - 89	42

TABLE VIII. (cont)				
Compound	% Recovered			RPD
2-Chlorophenol	27	-	123	40
4-Chloro-3-methylphenol	23	-	97	42
4-Nitrophenol	10	-	80	50

16.5. Blind spikes. It is EM-9 QA/QC policy to prepare and submit blind spikes on a regular basis as an independent check of method accuracy. Standard reference materials resemble submitted matrices as closely as possible.

16.6. Sample analysis. Samples can be analyzed upon successful completion of the calibration procedures addressed in Section 15. Sample analysis injection times must be within 12 h of the injection time of the DFTPP analysis. Samples must be acquired using the conditions by which the standard was acquired. Samples must be analyzed within 40 d of sample extraction.

16.6.1. Internal standard response from each sample injection must agree within a factor of two (-50% to 200%) with the internal standard response from the most recent continuing calibration standard.

16.6.2. Sample internal standard retention times must not differ by more than 30 s from the continuing calibration standard.

16.6.3. Positively identified target compound concentrations must fall within the demonstrated linear range. Where necessary, sample extracts are diluted and reanalyzed. The undiluted and one diluted analysis are usually reported.

16.6.4. Discrete chromatographic peaks which are not identified as target compounds are treated as tentatively identified compounds (TICs). These can be identified through comparison of unknown spectra with a mass spectral database, at the client's request.

16.7. Qualitative analysis.

16.7.1. Target compounds detected in sample injections are positively identified on the basis of relative retention time (RRT) and mass spectral criteria. Table IX lists analytes and their characteristic ions.

16.7.1.1. The sample component relative retention time must agree within ± 0.06 RRT units of that of the same component in the continuing calibration standard.

16.7.1.2. Qualitative verification requires the following conditions to be met:

- All ions present in the standard mass spectrum at a relative intensity >10% must be present in the sample spectrum.

- The relative intensities of ions specified above must agree within 20%.

- Ions with relative intensity >10% in the sample spectrum but not present in the standard spectrum must be accounted for by generating extracted ion current profiles (EICP) for the relevant ions.

- Compounds present in samples but determined not to be target compounds are treated as tentatively identified compounds (TICs). A maximum of 20 discrete compounds may be identified at a client's request, through comparison of unknown spectra with a mass spectral library database. TICs will be searched only when their relative ion concentration (RIC) area is greater than 25% of the nearest internal standard RIC area.

16.8. Quantitative analysis. When a target compound has been positively identified, quantitation is based on the EICP of the primary characteristic ion using the internal standard technique. The internal standard used will be the one nearest the retention time of the analyte.

16.8.1. The following calculations are used to quantify target analytes in low-level aqueous samples:

$$\text{Conc } (\mu g/L) = \frac{(Ax)\ (Is)\ (Vt)}{(Ais)\ (RF)\ (Vi)\ (Vo)} ,$$

where Ax = area of the characteristic ion for the analyte being measured,
Is = amount of internal standard injected (ng),
Vt = volume of total extract taking into account any dilutions,
Ais = area of characteristic ion for the internal standard,
RF = response factor for the compound being measured,
Vi = volume of extract injected (μL), and
Vo = volume of water extracted.

16.8.2. Calculation of response factors (RF). This applies to 1.0-μL injections of standards for continuing and initial calibration purposes.

$$RF = \frac{(Ax)\ (Cis)}{(Ais)\ (Cx)} ,$$

where Ax = area of the characteristic ion for the analyte being measured,
Cis = concentration of the specific internal standard (40 ng/μL),
Ais = area of the characteristic ion of the specific internal standard, and
Cx = concentration of the compound being measured (ng/μL).

17. Reporting

17.1. Analytical results are reported using one of two target compound lists (TCLs) depending upon the requirements of the submitter. The Appendix 9 TCL list (ground water monitoring) includes the Hazardous Substance List (HSL) plus 43 additional analytes. Table X lists HSL target compounds and Table XI lists the Appendix 9 target compounds. Compound on the HSL list are routinely analyzed for and reported.

18. Proper Waste Disposal Practices

18.1. General waste management.

18.1.1. Each analyst within the section shall be given Waste Generator training by EM-8 within 90 days of date of hire.

18.1.2. Wherever possible, the generation of waste shall be minimized through reduction, reuse, or recycling. Wherever possible, containers should be segregated to reflect the nature of the hazardous waste and the eventual waste-disposal methods. For example, chlorinated solvent wastes should be segregated from flammable, nonchlorinated solvents, and >50-ppm contaminated PCB waste should be segregated from <50-ppm PCB contaminated waste. This is especially important in analysis areas where the waste generated is considered to be mixed waste.

18.1.3. Categorized the waste using a Waste Profile Form from EM-8.

18.1.4. Upon completion of a Waste Profile Form, the waste is disposed of by completing a Waste Disposal Request Form from EM-7. Approximately

30 days is required for the disposal of waste after the completion of the listed forms.

18.2. Solid waste.

18.2.1. Solid hazardous waste, such as contaminated paper towels, pipettes, spent syringes, and glass vials, is accumulated in a covered plastic container lined with a plastic bag. The container is labeled with a hazardous waste label identifying the hazard, the type of material being stored (i.e., pipettes, paper towels, etc.), the accumulation start date, and the laboratory of origin.

18.2.2. The waste container is opened only for the time necessary to add the waste.

18.3. Liquid waste.

18.3.1. Liquid wastes, such as spent samples and spent solvents that are not reusable, are accumulated in glass or steel containers appropriate for the type of sample being stored. For example, caustic materials should be stored in glass containers whereas spent solvents that are not to be recycled should be stored in metal containers.

18.3.2. All containers storing hazardous liquid materials must be secondarily contained. The container is labeled with a hazardous waste label identifying the hazard, the type of material being stored, the accumulation start date, and the laboratory of origin.

18.3.3. The waste container is opened only for the time necessary to add the waste.

18.4. Unused samples.

18.4.1. Return unused environmental samples to the Sample Management section for disposal.

19. Source Material

19.1. "USEPA Contract Laboratory Program, Statement of Work for Organic Analysis, Multi-Media, Multi Concentration," Document no. OLMO1.0 USEPA, October 1986.

19.2. USEPA, "Test Methods for Evaluating Solid Wastes, Physical/Chemical Methods," (SW846), December 1987.

19.3. Sorbent Extraction Technology, K. C. Van Horne, Analytical International, Inc., 1985.

19.4. "Hazardous and Mixed Waste," Administrative Requirement 10-3, in *Environment, Safety, and Health Manual*, Los Alamos National Laboratory Manual, Chapter 1 (most recent edition).

TABLE IX.
CHARACTERISTIC IONS FOR SEMIVOLATILE COMPOUNDS

Compound	Retention time (min)	Primary ion	Secondary ion(s)
2-Picoline	3.75[a]	93	66, 92
Aniline	5.68	93	66, 65
Phenol	5.77	94	65, 66
Bis(2-chloroethyl) ether	5.82	93	63, 95
2-Chlorophenol	5.97	128	64, 130
1,3-Dichlorobenzene	6.27	146	148, 111
1,4-Dichlorobenzene-d_4 (I.S.)	6.35	152	150, 115
1,4-Dichlorobenzene	6.40	146	148, 111
Benzyl alcohol	6.78	108	79, 77
1,2-Dichlorobenzene	6.85	146	148, 111
N-Nitrosomethylethylamine	6.97	88	42, 88, 43, 56
Bis(2-chloroisopropyl) ether	7.22	45	77, 121
Ethyl carbamate	7.27	62	62, 44, 45, 74
Thiophenol (Benzenethiol)	7.42	110	110, 66, 109, 84
Methyl methanesulfonate	7.48	80	80, 79, 65, 95
N-Nitroso-di-n-propylamine	7.55	70	42, 101, 130
Hexachloroethane	7.65	117	201, 199
Maleic anhydride	7.65	54	54, 98, 53, 44
Nitrobenzene	7.87	77	123, 65
Isophorone	8.53	82	95, 138
N-Nitrosodiethylamine	8.70	102	102, 42, 57, 44, 56
2-Nitrophenol	8.75	139	109, 65
2,4-Dimethylphenol	9.03	122	107, 121
p-Benzoquinone	9.13	108	54, 108, 82, 80
Bis (2-chloroethoxy) methane	9.23	93	95, 123
Benzoic acid	9.38	122	105, 77

TABLE IX. (cont)

Compound	Retention time (min)	Primary ion	Secondary ion(s)
2,4-Dichlorophenol	9.48	162	164, 98
Trimethyl phosphate	9.53	110	110, 79, 95, 109, 140
Ethyl methanesulfonate	9.62	79	79, 109; 97, 45, 65
1,2,4-Trichlorobenzene	9.67	180	182, 145
Naphthalene-d_8 (I.S.)	9.75	136	68
Naphthalene	9.82	128	129, 127
Hexachlorobutadiene	10.43	225	223, 227
Tetraethyl pyrophosphate	11.07	99	99, 155, 127, 81, 109
Diethyl sulfate	11.37	139	139, 45, 59, 99, 111, 125
4-Chloro-3-methylphenol	11.68	107	144, 142
2-Methylnaphthalene	11.87	142	141
2-Methylphenol	12.40	107	107, 108, 77, 79 90
Hexachloropropene	12.45	213	213, 211, 215, 117, 106, 141
Hexachlorocyclopentadiene	12.60	237	235, 272
N-Nitrosopyrrolidine	12.65	100	100, 41, 42, 68, 69
Acetophenone	12.67	105	71, 105, 51, 120
4-Methylphenol	12.82	107	107, 108, 77, 79 90
2,4,6-Trichlorophenol	12.85	196	198, 200
o-Toluidine	12.87	106	106, 107, 77, 51, 79
3-Methylphenol	12.93	107	107, 108, 77, 79, 90
2-Chloronaphthalene	13.30	162	127, 164
N-Nitrosopiperidine	13.55	114	42, 114, 55, 56,41
1,4-Phenylenediamine	13.62	108	108, 80, 53, 54, 52
1-Chloronaphthalene	13.65[a]	162	127, 164
2-Nitroaniline	13.75	65	92, 138
5-Chloro-2-methylaniline	14.28	106	106, 141, 140, 77, 89
Dimethyl phthalate	14.48	163	194, 164

TABLE IX. (cont)

Compound	Retention time (min)	Primary ion	Secondary ion(s)
Acenaphthylene	14.57	152	151, 153
2,6-Dinitrotoluene	14.62	165	63, 89
Phthalic anhydride	14.62	104	104, 76, 50, 148
o-Anisidine	15.00	108	80, 108, 123, 52
3-Nitroaniline	15.02	138	108, 92
Acenaphthene-d_{10} (I.S.)	15.05	164	162, 160
Acenaphthene	15.13	154	153, 152
2,4-Dinitrophenol	15.35	184	63, 154
2,6-Dinitrophenol	15.47	162	162, 164, 126, 98, 63
4-Chloroaniline	15.50	127	127, 129, 65, 92
Isosafrole	15.60	162	162, 131, 104, 77, 51
Dibenzofuran	15.63	168	139
2,4-Diaminotoluene	15.78	121	121, 122, 94, 77, 104
2,4-Dinitrotoluene	15.80	165	63, 89
4-Nitrophenol	15.80	139	109, 65
2-Naphthylamine	16.00[a]	143	115, 116
1,4-Naphthoquinone	16.23	158	158, 104, 102, 76, 50, 130
p-Cresidine	16.45	122	122, 94, 137, 77, 93
Dichlorovos	16.48	109	109, 185, 79, 145
Diethyl phthalate	16.70	149	177, 150
Fluorene	16.70	166	165, 167
2,4,5-Trimethylaniline	16.70	120	120, 135, 134, 91, 77
N-Nitrosodibutylamine	16.73	84	84, 57, 41, 116, 158
4-Chlorophenyl phenyl ether	16.78	204	206, 141
Hydroquinone	16.93	110	110, 81, 53, 55
4,6-Dinitro-2-methylphenol	17.05	198	51, 105
Resorcinol	17.13	110	110, 81, 82, 53, 69

TABLE IX. (cont)

Compound	Retention time (min)	Primary ion	Secondary ion(s)
N-Nitrosodiphenylamine	17.17	169	168, 167
Safrole	17.23	162	162, 162, 104, 77, 103, 135
Hexamethyl phosphoramide	17.33	135	135, 44, 179, 92, 42
3-(Choromethyl)pyridine hydrochloride	17.50	92	92, 127, 129, 65, 39
Diphenylamine	17.54[a]	169	168, 167
1,2,4,5-Tetrachlorobenzene	17.97	216	216, 214, 179, 108, 143, 218
1-Naphthylamine	18.20	143	143, 115, 89, 63
1-Acetyl-2-thiourea	18.22	118	43, 118, 42, 76
4-Bromophenyl phenyl ether	18.27	248	250, 141
Toluene diisocyanate	18.42	174	174, 145, 173, 146, 132, 91
2,4,5-Trichlorophenol	18.47	196	196, 198, 97, 132, 99
Hexachlorobenzene	18.65	284	142, 249
Nicotine	18.70	84	84, 133, 161, 162
Pentachlorophenol	19.25	266	264, 268
5-Nitro-2-methylaniline	19.27	152,	77, 152, 79, 106, 94
Thionazine	19.35	107	96, 107, 97, 143, 79, 68
4-Nitroaniline	19.37	138	138, 65, 108, 92, 80, 39
Phenanthrene-d_{10} (I.S.)	19.55	188	94, 80
Phenanthrene	19.62	178	179, 176
Anthracene	19.77	178	176, 179
1,4-Dinitrobenzene	19.83	168	168, 75, 50, 76, 92, 122
Mevinphos	19.90	127	127, 192, 109, 67, 164

TABLE IX. (cont)

Compound	Retention time (min)	Primary Ion	Secondary Ion(s)
Naled	20.03	109	109, 145, 147, 301, 79, 189
1,3-Dinitrobenzene	20.18	168	168, 76, 50, 75, 92, 122
Diallate (cis or trans)	20.57	86	86, 234, 43, 70
1,2-Dinitrobenzene	20.58	168	168, 50, 63, 74
Diallate (trans or cis)	20.78	86	86, 234, 43, 70
Pentachlorobenzene	21.35	250	250, 252, 108, 248, 215, 254
5-Nitro-2-methoxyaniline	21.50	168	168, 79, 52, 138, 153, 77
Pentachloronitrobenzene	21.72	237	237, 142, 214, 249, 295, 265
4-Nitroquinoline-1-oxide	21.73	174	174, 101, 128, 75, 116
Di-n-butyl phthalate	21.78	149	150, 104
2,3,4,6-Tetrachlorophenol	21.88	232	232, 131, 230, 166, 234, 168
Demeton-o	22.72	88	88, 89, 60, 61, 115, 171
Fluoranthene	23.33	202	101, 203
1,3,5-Trinitrobenzene	23.68	75	75, 74, 213, 120, 91, 63
Dicrotophos	23.82	127	127, 67, 72, 109, 193, 237
Benzidine	23.87	184	92, 185
Trifluralin	23.88	306	306, 43, 264, 41, 290
Bromoxynil	23.90	277	277, 279, 88, 275, 168
Pyrene	24.02	202	200, 203
Monocrothophos	24.08	127	127, 192, 67, 97, 109
Phorate	24.10	75	75, 121, 97, 93, 260
Sulfallate	24.23	188	188, 88, 72, 60, 44
Demeton-s	24.30	88	88, 60, 81, 89, 114, 115
Phenacetin	24.33	108	180, 179, 109, 137, 80
Dimethoate	24.70	87	87, 93, 125, 143, 229

TABLE IX. (cont)

Compound	Retention time (min)	Primary ion	Secondary ion(s)
Phenobarbital	24.70	204	204, 117, 232, 146, 161
Carbofuran	24.90	164	164, 149, 131, 122
Octamethyl pyrophosphoramide	24.95	135	135, 44, 199, 286, 153, 243
4-Aminobiphenyl	25.08	169	169, 168, 170, 115
Terbufos	25.35	231	231, 57, 97, 153, 103
Pronamide	25.48	173	173, 175, 145, 109, 147
Aminoazobenzene	25.72	197	92, 197, 120, 65, 77
Dichlone	25.77	191	191, 163, 226, 228, 135, 193
Dinoseb	25.83	211	211, 163, 147, 117, 240
Disulfoton	25.83	88	88, 97, 89, 142, 186
Fluchloralin	25.88	306	306, 63, 326, 328, 264, 65
Mexacarbate	26.02	165	165, 150, 134, 164, 222
4.4'-Oxydianiline	26.08	200	200, 108, 171, 80, 65
Butyl benzyl phthalate	26.43	149	91, 206
4-Nitrobiphenyl	26.55	199	199, 152, 141, 169, 151
Phosphamidon	26.85	127	127, 264, 72, 109, 138
2-Cyclohoxyl-4,6-dinitrophenol	26.87	231	231, 185, 41, 193, 266
Methyl Parathion	27.03	109	109, 125, 263, 79, 93
Carbaryl	27.17	144	144, 115, 116, 201
Dimethylaminoazobenzene	27.50	225	225, 120, 77, 105, 148, 42
Propylthiouracil	27.68	170	170, 142, 114, 83
Benz(a)anthracene	27.83	228	229, 226
Chrysene-d_{12} (I.S.)	27.88	240	120, 236

TABLE IX. (cont)

Compound	Retention time (min)	Primary ion	Secondary ion(s)
3,3'-Dichlorobenzidine	27.88	252	254, 126
Chrysene	27.97	228	226, 229
Malathion	28.08	173	173, 125, 127, 93, 158
Kepone	28.18	272	272, 274, 237, 178, 143, 270
Fenthion	28.37	278	278, 125, 109, 169, 153
Parathion	28.40	109	109, 97, 291, 139, 155
Anilazine	28.47	239	239, 241, 143, 178, 89
Bis(2-ethylhexyl) phthalate	28.47	149	167, 279
3,3'-Dimethylbenzidine	28.55	212	212, 106, 196, 180
Carbophenothion	28.58	157	157, 97, 121, 342, 159, 199
5-Nitroacenaphthene	28.73	199	199, 152, 169, 141, 115
Methapyrilene	28.77	97	97, 50, 191, 71
Isodrin	28.95	193	193, 66, 195, 263, 265, 147
Captan	29.47	79	79, 149, 77, 119, 117
Chlorfenvinphos	29.53	267	267, 269, 323, 325 295
Crotoxyphos	29.73	127	127, 105, 193, 166
Phosmet	30.03	160	160, 77, 93, 317, 76
EPN	30.11	157	157, 169, 185, 141, 323
Tetrachlorvinphos	30.27	329	109, 329, 331, 79, 333
Di-n-octyl phthalate	30.48	149	167, 43
2-Aminoanthraquinone	30.63	223	223, 167, 195
Barban	30.83	222	222, 51, 87, 224, 257, 153
Aramite	30.92	185	185, 191, 319, 334, 197, 321
Benzo(b)fluoranthene	31.45	252	253, 125

TABLE IX. (cont)

Compound	Retention time (min)	Primary ion	Secondary ion(s)
Nitrofen	31.48	283	283, 285, 202, 139, 253
Benzo(k)fluoranthene	31.55	252	253, 125
Chlorobenzilate	31.77	251	251, 139, 253, 111, 141
Fensulfothion	31.87	293	293, 97, 308, 125, 292
Ethion	32.08	231	231, 97, 153, 125, 121
Diethylstilbestrol	32.15	268	268, 145, 107, 239, 121, 159
Famphur	32.67	218	218, 125, 93, 109, 217
Tri-p-tolyl phosphate[b]	32.75	368	368, 367, 107, 165, 198
Benzo(a)pyrene	32.80	252	253, 125
Perylene-d_{12} (I.S.)	33.05	264	260, 265
7,12-Dimethylbenz(a)anthracene	33.25	256	256, 241, 239, 120
5,5-Diphenylhydantoin	33.40	180	180, 104, 252, 223, 209
Captafol	33.47	79	79, 77, 80, 107
Dinocap	33.47	69	69, 41, 39
Methoxychlor	33.55	227	227, 228, 152, 114, 274, 212
2-Acetylaminofluorene	33.58	181	181, 180, 223, 152
4,4'-Methylenebis-(2-chloroaniline)	34.38	231	231, 266, 268, 140, 195
3,3'-Dimethoxybenzidine	34.47	244	244, 201, 229
3-Methylcholanthrene	35.07	268	268, 252, 253, 126, 134, 113
Phosalone	35.23	182	182, 184, 367, 121, 379
Azinphos-methyl	35.25	160	160, 132, 93, 104, 105
Leptophos	35.28	171	171, 377, 375, 77, 155, 379
Mirex	35.43	272	272, 237, 274, 270 239, 235
Tris(2,3-dibromopropyl phosphate	35.68	201	137, 201, 119, 217, 219, 199
Dibenz(a,j)acridine	36.40	279	279, 280, 277, 250

TABLE IX. (cont)

Compound	Retention time (min)	Primary ion	Secondary ion(s)
Menstranol	36.48	277	277, 310, 174, 147, 242
Coumaphos	37.08	362	362, 226, 210, 364, 97, 109
Indeno(1,2,3-cd)pyrene	39.52	276	138, 227
Dibenz(a,h)anthracene	39.82	278	139, 279
Benzo(g,h,i)perylene	41.43	276	138,277
1,2:4,5-Dibenzopyrene	41.60	302	302, 151, 150, 300
Strychnine	45.15	334	334, 335, 333
Piperonyl sulfoxide	46.43	162	162, 135, 105, 77
Hexachlorophene	47.98	196	196, 198, 209, 211, 406, 408
Aldrin		66	263, 220
Aroclor-1016		222	260, 292
Aroclor-1221		190	224, 260
Aroclor-1232		190	224, 260
Aroclor-1242		222	256, 292
Aroclor-1248		292	362, 326
Aroclor-1254		292	362, 326
Aroclor-1260		360	362, 394
α-BHC		183	181, 109
β-BHC		181	183, 109
4,4'-DDD		235	237, 165
4,4'-DDE		246	248, 176
4,4'-DDT		235	237,165
Dieldrin		79	263, 279
1,2-Diphenylhydrazine		77	105, 182
Endosulfan I		195	339, 341
Endosulfan II		337	339, 341
Endosulfan sulfate		272	387, 422

TABLE IX. (cont)

Compound	Retention time (min)	Primary ion	Secondary ion(s)
Endrin		263	82, 81
Endrin aldehyde		67	345, 250
Endrin ketone		317	67, 319
2-Fluorobiphenyl (surr.)		172	171
2-Fluorophenol (surr.)		112	64
Heptachlor		100	272, 274
Heptachlor epoxide		353	355, 351
Nitrobenzene-d_5 (surr.)		82	128, 54
N-Nitrosodimethylamine		42	74, 44
Phenol-d_6 (surr.)		99	42, 71
Terphenyl-d_{14} (surr.)		244	122, 212
2,4,6-Tribromophenol (surr.)		330	332, 141
Toxaphene		159	231, 233

I.S. = internal standard
surr. = surrogate
[a]Estimated retention times
[b]Substitute for the nonspecific mixture, tricresyl phosphate

TABLE X.
LIMIT OF QUANTITATION FOR HAZARDOUS SUBSTANCE LIST OF SEMIVOLATILE ORGANIC ANALYTES IN WATER

Compound	CAS number	LOQ µg/L
Acenaphthene	83-32-9	10
Acenaphthylene	208-96-2	10
Anthracene	120-12-7	10
Aniline	62-53-3	10 *
Azobenzene	3-33-3	10
Benzidine	92-87-5	10 *,a
Benz(a)anthracene	56-55-3	10
Benzo(b)fluoranthene	205-99-2	10
Benzo(k)fluoranthene	207-88-9	10
Benzoic Acid	65-85-0	10 *,c
Benzo(g,h,i)perylene	191-24-2	10
Benzo(a)pyrene	50-32-8	10
Benzyl alcohol	0-51-6	10
Bis(2-chloroethoxy)methane	111-91-1	10
Bis(2-chloroethyl) ether	111-44-4	10
Bis(2-chloroisopropyl) ether	8-60-1	10
4-Bromophenyl phenyl ether	1-55-3	10
Butyl benzyl phthalate	85-68-7	10 *
4-Chloroaniline	6-47-8	10 *,c
4-Chloro-3-methylphenol	59-50-7	10
2-Chloroanaphthalene	91-58-7	10
2-Chlorophenol	95-57-8	10
4-Chlorophenyl phenyl ether	7005-72-3	10
Chrysene	218-01-9	10
Dibenz(a,h)anthracene	53-70-3	10
Dibenzofuran	132-64-9	10

TABLE X. (cont)		
Compound	CAS number	LOQ µg/L
Di-n-butyl phthalate	84-74-2	10 *
1,2-Dichlorobenzene	95-50-1	10
1,3-Dichlorobenzene	541-73-1	10
1,4-Dichlorobenzene	6-46-7	10
3,3'-Dichlorobenzidine	91-94-1	10 *
2,4-Dichlorophenol	120-83-2	10
Diethyl phthalate	84-66-2	10 *
2,4-Dimethylphenol	5-67-9	10 *,c
Dimethyl phthalate	131-11-3	10 *
4,6-Dinitro-2-methylphenol	534-52-1	10
2,4-Dinitrophenol	51-28-5	10 *,c
2,4-Dinitrotoluene	121-14-2	10
2,6-Dinitrotoluene	606-20-2	10
Di-n-octyl phthalate	117-84-0	10
Bis(2-ethylhexyl) phthalate	117-81-7	10
Fluoranthene	206-44-0	10
Fluorene	86-73-7	10
Hexachlorobenzene	118-74-1	10
Hexachlorobutadiene	87-68-3	10
Hexachlorocyclopentadiene	77-47-4	10 *,d
Hexachloroethane	67-72-1	10
Indeno(1,2,3-cd)pyrene	193-39-5	10
Isophorone	78-59-1	10
2-Methylnaphthalene	91-57-6	10
2-Methylphenol	95-48-7	10 *,c
4-Methylphenol	6-44-5	10 *,c

TABLE X. (cont)

Compound	CAS number	LOQ µg/L
Naphthalene	91-20-3	10
2-Nitroaniline	88-74-4	10
3-Nitroaniline	99-09-2	10 *,c
4-Nitroaniline	0-01-6	10 *,c
Nitrobenzene	98-95-3	10
2-Nitrophenol	88-75-5	10
4-Nitrophenol	0-02-7	10 *,c
N-Nitrosodimethylamine	62-75-9	10 *,c
N-Nitrosodiphenylamine	86-30-6	10
N-Nitroso-di-n-propylamine	621-64-7	10 *
Pentachlorophenol	87-86-5	10 *,c
Phenanthrene	85-01-8	10
Phenol	8-95-2	10
Pyrene	129-00-0	10
1,2,4-Trichlorobenzene	120-82-1	10
2,4,5-Trichlorophenol	95-95-4	10
2,4,6-Trichlorophenol	88-06-2	10

* The limit of quantitation has not been verified for these analytes based upon a Method Detection Limit study. All other analytes averaged better than 70% recovery based upon seven repetitions. The amount of each analyte spiked was 330 µg into 1.0 L.

a Exhibits nonreproducible chromatography and oxidative loss during concentration.

c These analytes are subject to erratic chromatographic performance and/or thermal decomposition in the gas chromatograph inlet.

d Subject to thermal decomposition in the chromatographic inlet, chemical reaction with acetone in solution, and photochemical decomposition.

Limits of Quantitation (LOQ) will be two times greater for soil/sediment matrices which have been GPC cleaned.

TABLE XI.
APPENDIX 9 TARGET COMPOUND LIST OF SEMIVOLATILE ORGANIC ANALYTES IN WATER-LIMIT OF QUANTITATION

Compound	CAS number	LOQ µg/L
Acenaphthene	83-32-9	10
Acenaphthylene	208-96-2	10
Acetophenone	98-86-2	ND
Anthracene	120-12-7	10
Aniline	62-53-3	10 *
Aramite	140-57-8	ND
Azobenzene	3-33-3	10
Benzidine	92-87-5	10 *,a
Benz(a)anthracene	56-55-3	10
Benzo(b)fluoranthene	205-99-2	10
Benzo(k)fluoranthene	207-88-9	10
Benzoic Acid	65-85-0	10 *,c
Benzo(g,h,i)perylene	191-24-2	10
Benzo(a)pyrene	50-32-8	10
Benzyl alcohol	0-51-6	10
Bis(2-chloroethoxy)methane	111-91-1	10
Bis(2-chloroethyl) ether	111-44-4	10
Bis(2-chloroisopropyl) ether	108-60-1	10
4-Bromophenyl phenyl ether	101-55-3	10
Butyl benzyl phthalate	85-68-7	10 *
4-Chloroaniline	106-47-8	10 *,c
Chlorobenzilate	510-15-6	ND
4-Chloro-3-methylphenol	59-50-7	10
2-Chloroanaphthalene	91-58-7	10
2-Chlorophenol	95-57-8	10
4-Chlorophenyl phenyl ether	7005-72-3	10

TABLE XI. (cont)		
Compound	CAS number	LOQ µg/L
Chrysene	218-01-9	10
Diallate	2303-16-4	ND
Dibenz(a,h)anthracene	53-70-3	10
Dibenzofuran	132-64-9	10
Di-n-butyl phthalate	84-74-2	10 *
1,2-Dichlorobenzene	95-50-1	10
1,3-Dichlorobenzene	541-73-1	10
1,4-Dichlorobenzene	6-46-7	10
3,3'-Dichlorobenzidine	91-94-1	10 *
2,4-Dichlorophenol	120-83-2	10
Diethyl phthalate	84-66-2	10 *
Dimethoate	60-51-5	ND
7,12-Dimethylbenz(a)-anthracene	57-97-6	ND
2,4-Dimethylphenol	5-67-9	10 *,c
Dimethyl phthalate	131-11-3	10 *
4,6-Dinitro-2-methylphenol	534-52-1	10
2,4-Dinitrophenol	51-28-5	10 *,c
2,4-Dinitrotoluene	121-14-2	10
2,6-Dinitrotoluene	606-20-2	10
Di-n-octyl phthalate	117-84-0	10
Diphenylamine	122-39-4	ND
Dinoseb (DNBP)	88-85-7	ND
Disulfoton	298-04-4	ND
Bis(2-ethylhexyl) phthalate	117-81-7	10
Ethyl methacrylate	97-63-2	ND
Ethyl methanesulfonate	62-50-0	ND

TABLE XI. (cont)		
Compound	CAS number	LOQ µg/L
Famphur	52-85-7	ND
Fluoranthene	206-44-0	10
Fluorene	86-73-7	10
Hexachlorobenzene	118-74-1	10
Hexachlorobutadiene	87-68-3	10
Hexachlorocyclopentadiene	77-47-4	10 *,d
Hexachloroethane	67-72-1	10
Hexachlorophene	70-30-4	ND
Hexachloropropene	1888-71-7	ND
Indeno(1,2,3-cd)pyrene	193-39-5	10
Isodrin	465-73-6	ND
Isosafrole	120-58-1	ND
Isophorone	78-59-1	10
Kepone	143-50-0	ND
3-Methylcholanthrene	56-49-5	ND
2-Methylnaphthalene	91-57-6	10
2-Methylphenol	95-48-7	10 *,c
4-Methylphenol	106-44-5	10 *,c
Methapyrilene hydrochloride	91-80-5	ND
Methyl methacrylate	80-62-6	ND
Methyl methanesulfonate	66-27-3	ND
Methyl Parathion	296-00-0	ND
Naphthalene	91-20-3	10
2-Nitroaniline	88-74-4	10
3-Nitroaniline	99-09-2	10 *,c
4-Nitroaniline	0-01-6	10 *,c
Nitrobenzene	98-95-3	10
2-Nitrophenol	88-75-5	10

TABLE XI. (cont)

Compound	CAS number	LOQ µg/L
4-Nitrophenol	100-02-7	10 *,c
4-Nitroquinoline-1-oxide	56-57-5	ND
5-Nitro-2-methylaniline	99-55-8	ND
N-Nitrosodiethylamine	55-18-5	ND
N-Nitrosomethylethylamine	10595-95-6	ND
N-Nitroso-di-n-butylamine	924-16-3	ND
N-Nitrosodimethylamine	62-75-9	10 *,c
N-Nitrosodiphenylamine	86-30-6	10
N-Nitroso-di-n-propylamine	621-64-7	10 *
o-Toluidine	95-53-4	ND
Parathion	56-38-2	ND
Pentachloroethane	76-01-7	ND
Pentachloronitrobenzene	82-68-8	ND
Pentachlorophenol	87-86-5	10 *,c
Phenacetin	62-44-2	ND
Phenanthrene	85-01-8	10
Phenol	8-95-2	10
Phorate	298-02-2	ND
2-Picoline	109-06-8	ND
Pronamide	23950-58-5	ND
Pyridine	110-86-1	ND
Pyrene	129-00-0	10
Safrole	94-59-7	ND
2,3,4,6-Tetrachlorophenol	58-90-2	ND
1,2,4-Trichlorobenzene	120-82-1	10
2,4,5-Trichlorophenol	95-95-4	10
O,O,O-Triethyl phosphorate	126-68-1	ND

TABLE XI. (cont)

Compound	CAS number	LOQ µg/L
2,4,6-Trichlorophenol	88-06-2	10
sym-Trinitrobenzene	99-35-4	ND
Tetraethyl dithiophosphate	3689-24-5	ND

* The limit of quantitation has not been verified for these analytes based upon a Method Detection Limit study. All other analytes averaged better than 70% recovery based upon seven repetitions. The amount of each analyte spiked was 330 µg into 1.0 L.

a Exhibits nonreproducible chromatography and oxidative loss during concentration.

c These analytes are subject to erratic chromatographic performance and/or thermal decomposition in the gas chromatograph inlet.

d Subject to thermal decomposition in the chromatographic inlet, chemical reaction with acetone in solution, and photochemical decomposition.

ND not determined for these analytes.

TABLE XII
PRACTICAL QUANTITATION LIMITS (PQL) FOR
SEMIVOLATILE ORGANICS

Compound	Ground water µg/L	Soil/Solid µg/kg
Acenaphthene	10	660
Acenaphthylene	10	660
Acetophenone	10	ND
2-Acetylaminofluorene	20	ND
1-Acetyl-2-thiourea	1000	ND
2-Aminoanthraquinone	20	ND
Aminoazobenzene	10	ND
4-Aminobiphenyl	20	ND
Anilazine	100	ND
O-Anisidine	10	ND
Anthracene	10	660
Aramite	20	ND
Azinphos-methyl	100	ND
Barban	200	ND
Benz(a)anthracene	10	660
Benzo(b)fluoranthene	10	660
Benzo(k)fluoranthene	10	660
Benzoic Acid	50	3300
Benzo(g,h,i)perylene	10	660
Benzo(a)pyrene	10	660
p-Benzoquinone	10	ND
Benzyl alcohol	20	1300
Bis(2-chloroethoxy)methane	10	660
Bis(2-chloroethyl) ether	10	660
Bis(2-chloroisopropyl) ether	10	660
4-Bromophenyl phenyl ether	10	660

TABLE XII (cont)		
Compound	Ground water µg/L	Soil/Solid µg/kg
Bromoxynil	10	ND
Butyl benzyl phthalate	10	660
Captafol	20	ND
Captan	50	ND
Carbaryl	10	ND
Carbofuran	10	ND
Carbophenothion	10	ND
Chlorofenvinphos	20	ND
4-Chloroaniline	20	1300
Chlorobenzilate	10	ND
5-Chloro-2-methylaniline	10	ND
4-Chloro-3-methylphenol	20	1300
3-(Chloromethyl)pyridine hydrochloride	100	ND
2-Chloroanaphthalene	10	660
2-Chlorophenol	10	660
4-Chlorophenyl phenyl ether	10	660
Chrysene	10	660
Coumaphos	40	ND
p-Cresidine	10	ND
Crotoxyphos	20	ND
2-Cyclohexyl-4,6-dinitrophenol	100	ND
Demeton-o	10	ND
Demeton-s	10	ND
Diallate	10	ND
2,4-Diaminotoluene	20	ND
Dibenz(a,j)acridine	10	ND
Dibenz(a,h)anthracene	10	660

TABLE XII (cont)		
Compound	Ground water µg/L	Soil/Solid µg/k
Dibenzofuran	10	660
Dibenzo(a,e)pyrene	10	ND
Di-n-butyl phthalate	10	ND
Dichlone	NA	ND
1,2-Dichlorobenzene	10	660
1,3-Dichlorobenzene	10	660
1,4-Dichlorobenzene	10	660
3,3'-Dichlorobenzidine	20	1330
2,4-Dichlorophenol	10	660
2,6-Dichlorophenol	10	ND
Dichlorovos	10	ND
Dichlorophos	10	ND
Diethyl phthalate	10	660
Diethylstilbestrol	20	ND
Diethyl sulfate	100	ND
Dimethoate	20	ND
3,3'-Dimethoxybenzidine	100	ND
Dimethylaminoazobenzene	10	ND
7,12-Dimethylbenz(a)anthracene	10	ND
3,3'-Dimethylbenzidine	10	ND
2,4-Dimethylphenol	10	660
Dimethyl phthalate	10	660
1,2-Dinitrobenzene	40	ND
1,3-Dinitrobenzene	20	ND
1,4-Dinitrobenzene	40	ND
4,6-Dinitro-2-methylphenol	50	3300
2,4-Dinitrophenol	50	3300

TABLE XII (cont)

Compound	Ground water µg/L	Soil/Solid µg/kg
2,4-Dinitrotoluene	10	660
2,6-Dinitrotoluene	10	660
Dinocap	100	ND
Dinoseb	20	ND
5,5-Diphenylhydantoin	20	ND
Di-n-octyl phthalate	10	660
Disulfoton	10	ND
EPN	10	ND
Ethion	10	ND
Ethyl carbamate	50	ND
Bis(2-ethylhexyl) phthalate	10	660
Ethyl methanesulfonate	20	ND
Famphur	20	ND
Fensulfothion	40	ND
Fenthion	10	ND
Fluchloralin	20	ND
Fluoranthene	10	660
Fluorene	10	660
Hexachlorobenzene	10	660
Hexachlorobutadiene	10	660
Hexachlorocyclopentadiene	10	660
Hexachloroethane	10	660
Hexachlorophene	50	ND
Hexachloropropene	10	ND
Hexamethyl phosphoramide	20	ND
Hydroquinone	ND	ND
Indeno(1,2,3-cd)pyrene	10	660
Isodrin	20	ND

TABLE XII (cont)

Compound	Ground water µg/L	Soil/Solid µg/kg
Isophorone	10	660
Isosafrole	10	ND
Kepone	20	ND
Leptophos	10	ND
Malathion	50	ND
Maleic anhydride	NA	ND
Mestranol	20	ND
Methapyriline	100	ND
Methoxychlor	10	ND
3-Methylcholanthrene	10	ND
4,4'-Methylenebis-(2-chloroaniline)	NA	ND
Methyl methanesulfonate	10	ND
2-Methylnaphthalene	10	660
Methyl Parathion	10	ND
2-Methylphenol	10	660
3-Methylphenol	10	ND
4-Methylphenol	10	660
Mevinphos	10	ND
Mexacarbate	20	ND
Mirex	10	ND
Monocrotophos	40	ND
Naled	20	ND
Naphthalene	10	660
1,4-Naphthoquinone	10	ND
1-Naphthylamine	10	ND
2-Naphthylamine	10	ND
Nicotine	20	ND

TABLE XII (cont)

Compound	Ground water µg/L	Soil/Solid µg/kg
5-Nitroacenaphthene	10	ND
2-Nitroaniline	50	3300
3-Nitroaniline	50	3300
4-Nitroaniline	20	ND
5-Nitro-2-methoxyaniline	10	ND
Nitrobenzene	10	660
4-Nitrobiphenyl	10	ND
Nitrofen	20	ND
2-Nitrophenol	10	660
4-Nitrophenol	50	3300
5-Nitro-2-methylaniline	10	ND
4-Nitroquinoline-1-oxide	40	ND
N-Nitrosodibutylamine	10	ND
N-Nitrosodiethylamine	20	ND
N-Nitrosodiphenylamine	10	660
N-Nitroso-di-n-propylamine	10	660
N-Nitrosopiperidine	20	ND
N-Nitrosopyrrolidine	40	ND
Octamethyl pyrophosphoramide	200	ND
4,4'-Oxydianiline	20	ND
Parathion	10	ND
Pentachlorobenzene	10	ND
Pentachloronitrobenzene	20	ND
Pentachlorophenol	50	3300
Phenacetin	20	ND
Phenanthrene	10	660
Phenobarbital	10	ND
Phenol	10	660

TABLE XII (cont)

Compound	Ground water µg/L	Soil/Solid µg/kg
1,4-Phenylenediamine	10	ND
Phorate	10	ND
Phosalone	100	ND
Phosmet	40	ND
Phosphamidon	100	ND
Phthalic anhydride	100	ND
2-Picoline	ND	ND
Piperonyl sulfoxide	100	ND
Pronamide	10	ND
Propylthiouracil	100	ND
Pyrene	10	660
Pyridine	ND	ND
Resorcinol	100	ND
Safrole	10	ND
Strychnine	40	ND
Sulfallate	10	ND
Terbufos	20	ND
1,2,4,5-Tetrachlorobenzene	10	ND
2,3,4,6-Tetrachlorophenol	10	ND
Tetrachlorvinphos	20	ND
Tetraethyl pyrophosphate	40	ND
Thionazine	20	ND
Thiophenol (benzenethiol)	20	ND
Toluene diisocyanate	100	ND
o-Toluidine	10	ND
1,2,4-Trichlorobenzene	10	660
2,4,5-Trichlorophenol	10	660
2,4,6-Trichlorophenol	10	660

TABLE XII (cont)

Compound	Ground water µg/L	Soil/Solid µg/kg
Trifluralin	10	ND
2,4,5-Trimethylaniline	10	ND
Trimethyl phosphate	10	ND
1,3,5-Trinitrobenzene	10	ND
Tris(2,3-dibromopropyl) phosphate	200	ND
Tri-p-tolyl phosphate (h)	10	ND
O,O,O-Triethylphosphorothioate	NT	ND

a. Soil/sediment PQLs are based upon a 30.0 g sample aliquot, wet weight, and GPC cleanup. When concentrations are reported on a dry weight basis the PQL will be higher.
b. The values in this table are for guidance only and may not always be achievable. Analyte recoveries are highly matrix dependent.
c. ND = Not determined
d. NA = Not applicable

VOLATILE ORGANIC COMPOUNDS IN SOIL AND SEDIMENT: CAPILLARY COLUMN TECHNIQUE – GC/MS (EPA SW846 METHOD 8260)

Analyte: Volatile organic compounds	**Method No.:** EO720
Matrix: Soil or sediment	**Procedure:** Purge/trap GC/MS, capillary column
Effective Date: 02/01/90	**Author:** Laura Kelly Matthew Monagle

SAFETY NOTE: Before beginning this procedure, read all of the Material Safety Data Sheets for the chemicals listed in Sec. 6. Read Sec. 4.3. of the EM-9 Safety Manual for information on personal protective clothing and equipment. Read Sec. 11 of this procedure and Source Materials 12.3 and 12.4 for proper waste disposal practices.

1. Principle of Method

1.1. Volatile organic compounds are purged from the sample onto a sorbent material. These analytes are then desorbed into a gas chromatograph (GC). The column is temperature-programmed and analytes are separated and detected with a mass spectrometer (MS).

1.2. Qualitative identification is performed by analyzing standards under the same conditions used for samples and comparing resultant mass spectra and GC retention times. Each identified component is quantified by relating the MS response for an appropriately selected ion produced by that compound to the MS response for another ion produced by an internal standard.

2. Analytes and Limit of Quantitation

Internal Standards	Surrogates
Pentafluorobenzene	1,2-Dichloroethane-d_4
1,4-Difluorobenzene	Toluene-d_8
1,4-Difluorobenzene-d_4	4-Bromofluorobenzene
Chlorobenzene-d_5	

2.1. Table I is a list of volatile organic compounds and their reporting limits of quantitative (LOQs). (Tables I-IV are found at the end of this procedure.)

2.2 The reporting limit of quantitation for the target VOCs is 5 μg/kg except for the following compounds.

Compound	µg/kg
Chloromethane	20.0
Vinyl chloride	20.0
Bromomethane	20.0
Chloroethane	20.0
Acetone	20.0
Acrolein	200.0
Acrylonitrile	200.0
2-Chloroethyl vinyl ether	200.0
Vinyl acetate	100.0
2-Butanone	20.0
4-Methyl-2-pentanone	20.0
2-Hexanone	20.0
1,2-Dibromo-3-chloropropane	100.0

Saturation of ions used for quantitation can occur at a concentration above 200 µg/kg. If saturation occurs the sample must be diluted and reanalyzed.

2.3. Table II lists all the volatile organic compounds and their characteristic masses. The volatile internal standards with the corresponding analytes are listed in Table III. Fig. 1. is a chromatogram with all volatile organic compounds, surrogates, and internal standards.

3. Interferences

3.1. Impurities in the purge gas and solvent vapors in the laboratory can contaminate samples. The analytical system must be demonstrated to be free from contamination under the condition of the analysis by running laboratory reagent blanks (i.e., method blanks). The use of non-TFE tubing, non-TFE thread sealants, or flow controllers with rubber components in the purging device must be avoided.

3.2. Samples can be contaminated by diffusion of volatile organics (particularly fluorocarbons and methylene chloride) through the septum seal into the sample during storage and handling. A trip blank, prepared from reagent water and carried through the holding period and the analysis protocol, serves as a check on such contamination. One trip blank per request group should be analyzed.

3.3. Contamination by carryover can occur whenever high-level and low-level samples are sequentially analyzed. Whenever an unusually concentrated sample is encountered, all following samples must be reanalyzed if carryover is suspected, or a method blank should follow until the contamination has been eliminated.

3.4. The volatile analysis laboratory should be completely free of solvents on the volatile organic component list.

4. Collection and Storage of Samples

4.1. Soil samples are collected in 40-mL screw-cap VOA vials with Teflon-lined silicone septa. The vials and septa should be washed with soap and water, rinsed with distilled deionized water, placed in an oven, and dried at 70°C for approximately 1 h.

4.2. VOA vials for samples with solid or semisolid (sludges) matrices should be filled as completely as possible. The vials should be tapped lightly as they are filled to try to eliminate as much free air space as possible. Two VOA vials should be filled at each sample location.

4.3. All sampling vials must be refrigerated between 0 and 4°C.

4.4. The holding time for soil samples is 14 days from the date of collection.

5. Apparatus

5.1. Purge and trap configuration.

5.1.1. The Precision Dynatech Autosampler is designed for in-situ purging of both soils and waters. The sample is loaded into glassware supplied with the autosampler. Internal standards and surrogates are added by the Precision Dynatech Autosampler. Purging takes place in the glass vessel.

5.1.2. The adsorbent trap must be at least 25 cm long and have an i.d. of at least 0.2667 cm. Starting from the inlet, the trap must contain the following amounts of absorbents: 1/3 2,6-diphenylene oxide polymer -60/80 mesh, chromatographic grade (Tenac GC or equivalent), 1/3 silica gel -35/60 mesh (Davison grade 15 or equivalent), and 1/3 coconut charcoal. Packed traps can be purchased through Supelco, Tekmar, or OI. If it is not necessary to analyze for dichlorodifluoromethane or other fluorocarbons of similar volatility, the charcoal can be eliminated and the polymer increased to fill 2/3 of the trap. Before initial use, the trap should be conditioned overnight at 180°C by backflushing with an inert gas flow of at least 20 mL/min. Before daily use, the trap should be conditioned for 10 min at 180°C with backflushing. Traps normally last 2-3 months when used daily. Some signs of deteriorating traps are: uncharacteristic recoveries of surrogate, especially toluene-d8, loss in response of internal standards during a 12 h shift, and a rise in the baseline during the early portion of the scan. The trap should be replaced if these characteristics are seen.

5.1.3. The desorber should be capable of rapidly heating (10°C/s) the trap to 180°C for desorption. The trap bakeout temperature should not exceed 220°C.

5.2. Gas chromatography/mass spectrometer/data system.

5.2.1. The GC must be temperature-programmable and should be equipped with adjustable differential flow controllers so that the column flow rate will be reproducible throughout desorption and temperature program operation. The GC is interfaced to the MS with a jet separator or is directly coupled.

5.2.2. Gas chromatographic column: Supelco VOCOL, 105-m x 0.53-mm x 3.0-μm film thickness or equivalent.

5.2.3. Mass spectrometer: Mass-spectral data are obtained with electron-impact ionization at a nominal electron energy of 70 eV. The mass spectrometer scans from 35 to 350 amu every 1 s or less and must produce a mass spectrum that meets all criteria in Step 7.1.1 when 50 ng of 4-bromofluorobenzene is introduced into the GC.

5.2.4. Data system: A computer system that allows the continuous acquisition and storage on machine-readable media of all mass spectra obtained throughout the duration of the chromatographic program must be interfaced to the mass spectrometer. The computer must have software that allows searching any GC/MS data file for ions of a specified mass and plotting such ion abundances versus time or scan number. This type of plot is defined as an extracted ion current profile (EICP). Software must also be available that allows integrating the abundances in any EICP between NIST and/or EPA mass-spectral libraries.

5.3. Microsyringes: 10-, 25-, 100-, and 500-μL, used for injecting the appropriate standards into the reagent water.

5.4. Syringes: 5- or 25-mL, for measuring the required aliquot of reagent water.

5.5. Balance: analytical, capable of accurately weighing 0.001 g.

5.6. Micro reaction vessels: 2- or 3-mL with Teflon-lined miniert valves, for the storage of stock or secondary standard solutions.

5.7. Disposable Pasteur pipettes: used for transferring stock or secondary standard solution from the volumetric flask to the micro reaction vessels.

6. Reagents/Standards

6.1. Methanol (CH_3OH). Pesticide quality or equivalent, demonstrated to be free of analytes. Must be stored separately from other solvents.

6.2. Reagent water. Must be purged with an inert gas for at least 30 min before use. Water must be free of interferents at the limit of quantitation (LOQ).

Alternatively, water may be purchased, preferably HPLC grade. Purity of water used must be verified by GC/MS analysis.

6.3. Stock solutions. All instructions for preparation of stock solutions and dilutions are located in the VOA standard preparation notebook located in Room 115, TA-59. See Table IV.

6.4. Instructions for storage of all standards, and expiration dates are found in the VOA standards preparation notebook. Expiration dates are to be strictly enforced.

6.5. Surrogate standards. The surrogates used are 1,2-dichloroethane-d_4, toluene-d_8, and 4-bromofluorobenzene.

6.6. Internal standards. The internal standards used are chlorobenzene-d_5, 1,4-difluorobenzene, 1,4-dichlorobenzene-d_4, and pentafluorobenzene.

6.7. 4-Bromofluorobenzene (BFB) standard. A standard solution containing 50 ng/μL of BFB in methanol is used for verifying the tune of the MS.

6.8. Calibration standards. Secondary calibration standards at a minimum of 5 concentration levels are prepared from calibration stock standards. The solutions are prepared in 5- or 25-mL aliquots of reagent water. The five concentration levels are 20, 50, 100, 150, and 200 μg/kg. A 5.0-μg/kg concentration level is optional.

6.9. Matrix spiking standards. Matrix spiking standard is prepared from volatile organic compounds which are representative of the compounds being investigated. The compounds used are 1,1-dichloroethene, benzene, trichloroethene, toluene, and chlorobenzene. A 10-μL aliquot of the matrix spiking standard is used for 5-mL samples (50-μL aliquot for 25-mL aqueous samples).

7. Calibration

7.1. Initial calibration.

7.1.1. Each GC/MS system must be hardware-tuned to meet the criteria listed below for a direct injection or purging of 50 ng of 4-bromofluorobenzene. Analyses can not proceed until criteria are met.

Mass	Relative Abundance Criteria
50	15 to 40% of mass 95
75	30 to 60% of mass 95
95	base peak, 100% relative abundance
96	5 to 9% of mass 95

173	<2% of mass 174
174	>50% of mass 95
175	5 to 9% of mass 174
176	≥95% but ≤101% of mass 174
177	5 to 9% of mass 176

'.1.2. Recommended GC/MS operating conditions

Electron energy:	70 V (nominal)
Mass range:	35-350 amu
Scan rate:	2 scan/s or less
Initial column temperature:	37°C
Initial column holding time:	4 min
Column temperature program:	4°C/min to 100°C, hold 1 min; 15°C/min to 230°C
Final column temperature:	230°C
Final column holding time:	0 min
Column bake out temperature:	230°C
Column bake out holding time:	0 min
Carrier gas:	Helium at ~15 mL/min

7.1.3. A set of at least 6 calibration standards containing the method analytes are required. The calibration standard concentrations used are 5, 20, 50, 100, 150, and 200 μg/mL. The calibration standard is prepared by adding the following volumes of the VOC 1-5 and HSL/VOC6 mixtures to 5.0 mL of reagent water. An optional technique is to prepare a calibration mix containing all the analytes and adding the volumes listed below to 5.0 mL of reagent water.

AMOUNT OF WORKING CALIBRATION STANDARD AND VOC #6 STANDARD ADDED

Std. conc.	5-mL aliquot	25-mL aliquot
	amount added (μL)	
20 μg/mL	4.0	20
50 μg/mL	10	50
100 μg/mL	20	100
150 μg/mL	30	150
200 μg/mL	40	200

7.1.4. The response factor, average response factor, and percent relative standard deviation for each compound will be calculated using the calibration program in the Hewlett Packard 1000 RTE system. A hard copy of the calibration report (produced by CBRPT) and copies of the quantitation reports with chromatograms are made and stored in a permanent calibration file associated with the instrument.

7.1.5. Five system performance check compounds (SPCCs) are checked for a minimum average response factor (RF): chloromethane, 1,1-dichloroethane, bromoform, 1,1,2,2-tetrachloroethane, and chlorobenzene. The minimum acceptable average RF for these compounds should be 0.300 (0.250 for bromoform). These compounds typically have RFs of 0.4-0.6 and are used to check overall instrument performance and/or degradation caused by contaminated lines or active sites in the system.

7.1.5.1. Chloromethane. This compound is easily lost as a result of a fast purge flow, or because the stock or working calibration standard (VOC #6 mix only) is degrading. The purge gas (helium) flow rate should be 25-40 mL/min on the purge-and-trap device. Optimize the flow rate to provide the best response for chloromethane and bromoform.

7.1.5.2. Bromoform. This compound will most likely to be purged very poorly if the purge flow is too slow. Cold spots and/or active sites in the transfer line may adversely affect response.

7.1.5.3. Tetrachloroethane and 1,1-dichloroethane. These compounds are degraded by contaminated transfer lines in purge-and-trap systems and/or active sites in trapping materials.

7.1.6. Continuing calibration check (CCC) compounds are used as a measure of the linearity of the response factors. The percent relative standard deviation (%RSD) is checked for the CCCs. These compounds are 1,1-dichloroethene, chloroform, 1,2-dichloropropane, toluene, ethylbenzene, and vinyl chloride. The maximum %RSD for these compounds is 30%. The %RSD for all analytes should be < 30%.

7.1.7. Once the initial calibration (containing the response factor, average response factor, and percent relative standard deviation for each analyte of the five different calibration standards) has been generated, the analyst can proceed with daily GC/MS calibration.

7.2. Continuing daily calibration.

7.2.1. Before samples are analyzed, inject or purge 50 ng of the 4-bromofluorobenzene (BFB) standard (1 μL of the 25-μg/mL

4-bromofluorobenzene solution for direct injection and 10 μL of the 25 μg/mL 4-bromofluorobenzene into 5 mL of reagent water for purging). The resultant mass spectra for the BFB must meet all the criteria given in Step 7.1.1. This procedure must be performed every 12 h of analysis. The 12-h sequence begins at the time at which BFB is injected into the GC/MS system.

7.2.2. The initial calibration curve for each compound must be checked and verified every 12 h before analyzing samples. This is accomplished by analyzing a 50-ng/mL continuing calibration standard and checking the SPCCs and CCCs.

7.2.3. The minimum response factor for the SPCCs must be 0.300 (0.250 for bromoform). Some possible problems are standard mixture degradation, contamination at the front end of the analytical column, and active sites in the column or chromatographic system.

7.2.4. The CCCs are used to check the validity of the initial calibration by calculating the percent difference between the average response factor from the initial calibration and the response factor from the current verification check standard. If the percent difference for any compound is 20%, the laboratory should consider this a warning limit. If the percent difference for each CCC is <25%, the initial calibration is assumed to be valid. If this criterion is not met (>25% difference) for any one CCC, corrective action must be taken. The percent difference for all analytes should be less than or equal to 25%. Corrective action can include but is not limited to, reanalysis of the verification check standard, cutting a portion of the column, or using a new working calibration standard. If a source of the problem cannot be determined after corrective action has been taken, a new five-point calibration (initial calibration) must be generated. See Step 7.1. Both SPCC and CCC criteria **must** be met before quantitative sample analysis begins.

8. Procedure

8.1. Low-level soil analysis.

8.1.1. BFB tuning criteria and continuing calibration criteria must be met before analysis of samples can begin.

8.1.2. Parameters.

Precision Autosampler	O I Sample Concentrator
Purge flow: 35 mL/min	Purge time: 8-10 min
Purge temp: 40°C	Desorb preheat: 20°C
Soil program for all samples	Desorb time: 2.00 min
Standard: Yes	Desorb temp: 180°

Line heat: 100
Sample heat: 40
Preheat: 30 sec.
Water volume: 5 mL
Pre-purge: 0
Purge time: 8.0 min
Flushes: 1
Soil stir: Yes
Desorb time: 2.0 min
Water trap Volume: 0

Trap bake time: 14.0 min
Bake temp: 215
Transfer line: 135
Valve temp: 125

8.1.3. A sample batch typically consists of a BFB, continuing calibration, reagent water blank, and samples up to the 12-h limit on BFB tune. Samples are set up as described in the following sections.

8.1.4. Assemble the bottom portion of the autosampler vial. Place 5 g of soil or sludge on top of the frit of the autosampler vial. Weigh the vial. Record the exact weight. Add a stirring bar and seal the vial. Alternatively, if the sample was collected in a preweighed autosampler vial, record weight and calculate weight. See Step 8.3 for instructions on percent moisture determinations. All data is to be recorded on the VOA benchsheet.

8.1.5. Place the sealed autosampler vial on the autosampler. The internal standard/purgeable surrogates are added automatically. Check the ISM syringe content before each sequence run (ISM/PSS). If the amount is low (<1 mL), refill according to the directions in the Precision Manual. The batch sequence can then be started.

8.1.6. The trapped materials are introduced to the GC column by rapidly heating the trap to 180°C while backflushing the trap with helium at 15 mL/min for 2 min.

8.1.7. To avoid contamination of the next sample, bake the trap at 215°C for 11 min. Return the trap to ambient temperature and analyze the next sample.

8.1.8. For each sample analyzed, including BFB and continuing calibrations, an entry must be made in the sample injection log associated with each instrument. This entry must be made within 24 h of data acquisition. This entry includes factors such as date and time sample was run, internal standard values, and surrogate recovery.

8.1.9. If the initial analysis of a sample shows a concentration of analytes that exceed the initial calibration range (higher than 200 μg/kg), the sample will need to be reanalyzed using an aliquot of <5 g but not <1 g. If compound saturation still occurs with a 1-g aliquot, a medium-level

analysis is necessary (see Section 8.2). Secondary-ion quantitation is allowed only when there are sample interferences with the primary ion. When a sample is analyzed that has saturated ions from a compound, the analysis must be followed by a blank water analysis. Sample analysis may not resume until a blank can be analyzed and found free of interferences. If this occurs during an automated run, reanalyze all following samples if carryover from the saturated compound is suspected.

8.1.10. If one or more of the surrogate spiking compounds are not within the control limits and/or the internal standard areas are +100%/-50% of the continuing calibration in a sample, that sample should be reanalyzed. See Step 9.2 for details.

8.1.11. If a trip, field, or holding blank is submitted with the soil samples, the sample should be prepared and analyzed as a blank (see Step 8.1.3). The sample is analyzed with the associated soil samples using the same initial and continuing calibration. The surrogate recoveries for the trip, field, or holding blank should meet the control limits set for soil analysis.

8.2. Medium-level soil analysis.

8.2.1. The medium-level soil method is based on extracting the soil or sediment sample with methanol. An aliquot of the methanol extract is added to reagent water containing the surrogate and internal standard. This method is used when saturation occurs or would occur during analysis of a 1-g sample.

NOTE: Steps 8.2.2 and 8.2.3 must be performed rapidly to avoid loss of volatile organics.

8.2.2. To avoid the loss of possible volatile compounds, gently mix the contents of the sample container including any supernatant liquids with a narrow metal spatula. Using a top-loading balance, weigh 5 g of sample (wet weight) into a tared 40-mL vial. Record the actual weight to the nearest 0.1 g.

8.2.3. Quickly add 5.0 mL of methanol to the vial. Cap and shake for 2 min.

8.2.4. Using a disposable Pasteur pipette, transfer approximately 1 mL of the reagent methanol to a GC autosampler vial for use as the method blank. Before analysis, the extracts may be stored in the dark between 0 and 4°C up to 40 days from the extraction date.

8.2.5. Remove the plunger from a 5-mL syringe and fill the syringe to overflowing with reagent water. Replace the plunger and compress the water to vent trapped air. Adjust the volume to 4.9 mL. Pull the

plunger back to 5 mL to allow volume for the addition of sample. Add 100 μL of the internal standard mix. Add 100 μL of the appropriate methanol extract.

8.2.6. Inject the 5 mL sample into the Precision Autosampler vial. Analyze as directed in Section 8.1.

8.2.7 If the initial analysis of a sample shows a concentration of analytes that exceeds the initial calibration range (higher than 200 μg/kg), the sample will need to be diluted and reanalyzed. Secondary-ion quantitation is allowed only when there are sample interferences with the primary ion. When a sample is analyzed that has saturated ions from a compound, the analysis must be followed by a blank water analysis. Sample analysis may not resume until a blank can be analyzed and found free of interferences. If a primary-ion saturation occurs during an automated run, all following samples should be reanalyzed if carryover from the saturated compound is suspected.

8.2.11. For a matrix spike in the medium-level sediment or soil samples, add 10.0 μL of matrix spike solution to the 5-mL syringe containing the methanol extract.

8.3. Determine percent moisture on all samples that are not radioactive or biohazards or where an insufficient quantity of sample was submitted. If a hazard prevents this determination, document this and include in the data packet. Determine percent moisture as follows:

8.3.1. Weigh an empty aluminum weighing pan. Record weight.

8.3.2. Add approximately 5 g of sample and reweigh. Record weight.

8.3.3. Place in a drying oven at 80-100°C for at least 24 h. Cool and reweigh, recording dry weight.

8.3.4. Percent moisture is calculated by:

$$\frac{\text{wet weight} - \text{dry weight}}{\text{dry weight}} \times 100$$

9. Quality Control

9.1. A method blank consisting of reagent water is automatically spiked with ISM/PSS mix. A method blank is analyzed at the beginning of each instrument batch (all samples analyzed together within the same 12-h period). The method blank must be free of any target volatile organic components at or above the limit of quantitation (LOQ) with the exception of acetone, methylene chloride, 2-butanone and toluene. These compounds can be detected in the method blank up to 5 times their LOQ. The surrogate recoveries should be within the control limits listed in Step 9.2. Analysis should not proceed until these requirements are met.

9.2. The following surrogates are spiked into each sample and analyzed as a measure of analyte recovery: 1,2-dichloroethane-d_4, toluene-d_8, and 4-bromofluorobenzene. If one or more of the surrogate spiking compounds are not within the control limits, those samples should be reanalyzed. If the reanalysis demonstrates similar results and the surrogate recoveries in the associated method blank are within the control limits, the out-of-control situation could be attributed to matrix effect and the results from the initial analysis should be reported. If the reanalysis of the sample has surrogate recoveries and/or internal standard areas within the control limits, the out-of-control condition could be due to analyst error or to a degrading surrogate spiking mix. In this case the results from the reanalysis should be reported.

SURROGATE RECOVERY CONTROL LIMITS	
1,2-Dichloroethane-d_4	70-121%
Toluene-d_8	81-117%
4-Bromofluorobenzene	74-121%

9.3. A matrix spike, matrix spike duplicate, and matrix spike control are analyzed with every analytical batch and/or request group. Matrix spike and matrix spike duplicate samples also measure analyte recovery from a sample. One of the submitted samples is used as the matrix media. It is prepared as a normal sample and 10.0 μL of the matrix spike mix is added to the media before purging. A matrix spike control is analyzed by spiking 10.0 μL of matrix spike mix into 5 mL of reagent water. This matrix spike control sample is used in interpretation of matrix spike/matrix spike duplicate results and in distinguishing a genuine matrix effect from a bad stock solution.

9.4. "Blind" QC samples are received from the Quality Assurance section at a rate of 10% of the total samples analyzed. These samples are analyzed in exactly the same manner as submitted samples.

9.5. A duplicate of a submitted sample may be analyzed in order to measure precision of the environmental measurements. A duplicate is typically analyzed when a request group has >15 samples or when a request group does not have a sample used as a matrix spike and matrix spike duplicate.

9.6. Samples certified by the American Association for Laboratory Accreditation (A2LA) should be analyzed once per month.

9.7. Laboratory performance evaluation samples provided by the US Environmental Protection Agency Water Pollution and Drinking Water are each analyzed twice a year as a part of the quality control program.

10. Data Interpretation

10.1. Qualitative analysis.

10.1.1. An analyte is identified by comparison of the sample mass spectrum with the mass spectrum of the compound from a standard (standard reference spectrum). The standard reference spectrum is obtained through analysis of a calibration standard. Two criteria must be satisfied to verify identification: (1) elution of the sample component at the same GC relative retention time (RRT) as that component in the daily standard; and (2) correspondence of the mass spectra of the sample component and the standard component.

10.1.1.1. The sample component RRT must agree within ±0.06 units of the RRT of the standard component in the daily calibration. If coelution of interfering components prohibits accurate assignment of the sample component RRT from the total ion chromatogram, the RRT from the total ion chromatogram, the RTT should be assigned by using extracted ion current profiles (EICPs) for ions unique to the component of interest.

10.1.1.2. All ions present in the standard mass spectrum at a relative intensity >10% of the primary ion must be present in the sample spectrum. The relative intensities of these ions must agree within ±20% between the standard and sample spectra.

EXAMPLE. For an ion with an abundance of 50% in the standard spectra, the corresponding sample ion abundance must be between 30% and 70%.

10.1.2. For samples containing components not associated with the calibration standards (non-target volatile organic components), a library search may be made for the purpose of tentative identification. Ten organic compounds of greatest concentration which are not identified as part of the calibration standard may be identified. Non-target volatile organic components with a response of <10% of the nearest internal standard are not required to be searched. Comparison of sample spectra with the spectra from the library searches will assign a tentative identification.

10.1.2.1. Relative intensities of major ions in the reference spectrum (ions with intensities >10% of the most abundant ion) should be present in the sample spectrum.

10.1.2.2. The relative intensities of the major ions should agree within ±20%.

EXAMPLE. For an ion with an abundance of 50% in the standard spectrum, the corresponding sample ion abundance must be between 30 and 70%.

10.1.2.3. Molecular ions present in the reference spectrum should be present in the sample spectrum.

10.1.2.4. Ions present in the sample spectrum but not in the reference spectrum should be reviewed for possible background contamination or presence of coeluting compounds.

10.1.2.5. Ions present in the reference spectrum but not in the sample spectrum should be reviewed for possible subtraction from the sample spectrum because of background contamination of coeluting peaks.

If the compound does not meet the identification criteria listed above, the compound shall be reported as unknown.

10.2. Quantitative analysis.

10.2.1. When a compound has been identified, the quantitation of that compound will be based on the integrated abundance from the EICP of the primary characteristic ion (see Table II). The compound will be quantitated using an internal standard technique. The internal standard used will be the one nearest the retention time of a given analyte.

10.2.1.2. The concentration of each identified analyte in the sample is calculated as follows:

<u>Low-level soil analysis</u>

$$\text{concentration } (\mu g/kg) = \frac{(Ax)\ (Is)}{(Ais)\ (RF)\ (W_s)\ (D)},$$

Medium-level soil analysis (used for highly contaminated samples).

$$\text{concentration } (\mu g/kg) = \frac{(Ax)\ (Is)\ (V_t)}{(Ais)\ (RF)\ (V_i)\ (W_s)\ (D)} ,$$

where Ax = area of characteristic ion for compound being measured,
Is = amount of internal standard injected (ng),
Ais = area of characteristic ion for the internal standard,
RF = response factor for compound being measured,
V_t = volume of total extract (μL),
V_i = volume of extract added for purging, (μL)
W_s = weight of sample extracted (g) or purged, and
D = $\frac{100 - \%\ moisture}{100}$.

10.2.1.3. The HP 1000 RTE system will automatically calculate the concentration (ng/kg) of the analyte detected when a report is generated.

10.2.2. Where applicable, an estimate of concentration for non-target volatile organic components in the sample should be made. The areas Ax and Ais (defined in Step 10.2.1.2) should be from the total ion chromatogram and the RF for the compound should be assumed to be 1. The concentration obtained should be reported indicating (1) that the value is an estimate and (2) which internal standard was used to determine concentration. The nearest internal standard free of interferences is used.

10.2.3. Results are reported without method blank correction. Method blanks will be reported as discrete samples.

11. Proper Waste Disposal Practices

11.1. General waste management.

11.1.1. Each analyst within the section shall be given Waste Generator training from EM-8 within 90 days of date of hire.

11.1.2. Wherever possible, the generation of waste shall be minimized through reduction, reuse or recycling. Wherever possible containers should be segregated to reflect the nature of the hazardous waste and the eventual waste-disposal methods. For example, chlorinated solvent wastes should be segregated from flammable, nonchlorinated solvents and >50-ppm PCB contaminated waste should be segregated from <50-ppm PCB contaminated waste. This is especially important in analysis areas where the waste generated is considered to be mixed waste.

11.1.3. Waste is categorized using a Waste Profile Form from EM-8. Upon completion of a Waste Profile Form, the waste is disposed of by completing a Waste Disposal Request Form from EM-7. Approximately 30 days is required for the disposal of waste after the completion of the listed forms.

11.2. Solid waste.

11.2.1. Solid hazardous waste, such as contaminated paper towels, pipettes, spent syringes, and glass vials, is accumulated in a covered plastic container lined with a plastic bag. The container is labeled with a hazardous waste label identifying the hazard, the type of material being stored (i.e., pipettes, paper towels, etc.), the accumulation start date, and the laboratory of origin.

11.2.2. The waste container is opened only for the time necessary to dispose of the waste.

11.3. Liquid waste.

11.3.1. Liquid wastes, such as spent samples and spent solvents that are not reusable, are accumulated in glass or steel containers appropriate for the type of sample being stored. For example, caustic materials should be stored in glass containers whereas spent solvents that are not to be recycled should be stored in metal containers.

11.3.2. All containers storing hazardous liquid materials must be secondarily contained. The container is labeled with a hazardous waste label identifying the hazard, the type of material being stored, the accumulation start date, and the laboratory of origin.

11.3.3. The waste container is opened only for the time necessary to dispose of the waste.

11.4. Unused samples.

11.4.1. Unused environmental samples are returned to the Sample Management section for eventual disposal.

12. Source Materials

12.1. "Test Methods for Evaluating Solid Waste, Physical/Chemical Methods," Laboratory Manual Vol. 1B, Method 8260, report no. SW-846 (November 1986).

12.2. "Statement of Work for Organics Analysis," USEPA Contract Laboratory Program (October 1986).

12.3. "Hazardous and Mixed Waste," Administrative Requirement 10-3, in *Environment, Safety, and Health Manual*, Los Alamos National Laboratory Manual, Chapter 1 (most recent edition).

12.4. "Low-Level Radioactive Solid Waste," Administrative Requirement 10-2, in *Environment, Safety, and Health Manual*, Los Alamos National Laboratory Manual, Chapter 1 (most recent edition).

TABLE I. VOLATILE ORGANIC COMPOUNDS

Analyte	CAS No.	LOQ µg/kg
Chloromethane	74-87-3	20
Vinyl Chloride	75-01-4	20
Bromomethane	74-83-9	20
Chloroethane	75-00-3	20
Acetone	67-64-1	20
Acrolein	107-02-8	200
Acrylonitrile	107-13-1	200
2-Chloroethyl vinyl ether	110-75-8	200
Dichlorodifluoromethane	75-71-8	10
Iodomethane	74-88-4	5.0
Trichlorotrifluoroethane	76-13-1	5.0
Trichlorofluoromethane	75-69-4	5.0
Methylene chloride	75-09-2	5.0
1,1-Dichloroethene	75-35-4	5.0
Carbon disulfide	75-15-0	5.0
trans-1,2-Dichloroethene	156-60-5	5.0
1,1-Dichloroethane	75-34-3	5.0
cis-1,2-Dichloroethene	156-59-2	5.0
Bromochloromethane	74-97-5	5.0
Chloroform	67-66-3	5.0
1,2-Dichloroethane	107-06-2	5.0
1,1-Dichloropropane	563-58-6	5.0
Vinyl acetate	108-05-4	10
2-Butanone	78-93-3	20
2,2-Dichloropropane	594-20-7	5.0
1,1,1-Trichloroethane	71-55-6	5.0
Carbon tetrachloride	56-23-5	5.0
Benzene	71-43-2	5.0

TABLE I. (cont)

Analyte	CAS No.	LOQ µg/kg
1,2-Dichloropropane	78-87-5	5.0
Trichloroethene	79-01-6	5.0
Dibromomethane	74-95-3	5.0
Bromodichloromethane	75-27-4	5.0
trans-1,3-Dichloropropene	1006-10-26	5.0
cis-1,3-Dichloropropene	1006-10-15	5.0
1,1,2-Trichloroethane	79-00-5	5.0
1,3-Dichloropropane	142-28-9	5.0
Chlorodibromomethane	124-48-1	5.0
4-Methyl-2-pentanone	10-81-01	20
Toluene	108-88-3	5.0
2-Hexanone	59-17-86	20
1,2-Dibromoethane	106-93-4	5.0
Tetrachloroethene	127-18-4	5.0
Chlorobenzene	108-90-7	5.0
1,1,1,2-Tetrachloroethane	630-20-6	5.0
Ethylbenzene	100-41-4	5.0
o,m,p-Xylene (mixed)	133-020-7	5.0
Styrene	100-42-5	5.0
Bromoform	75-25-2	5.0
1,1,2,2-Tetrachloroethane	79-34-5	5.0
1,2,3-Trichloropropane	96-18-4	5.0
Isopropylbenzene	98-82-8	5.0
Bromobenzene	108-86-1	5.0
n-Propylbenzene	103-65-1	5.0
2-Chlorotoluene	95-49-8	5.0
4-Chlorotoluene	106-43-4	5..

TABLE I. (cont)

Analyte	CAS No.	LOQ µg/kg
1,3,5-Trimethylbenzene	108-67-8	5.0
tert-Butylbenzene	98-06-6	5.0
1,2,4-Trimethylbenzene	95-63-6	5.0
sec-Butylbenzene	135-98-8	5.0
1,3-Dichlorobenzene	541-73-1	5.0
1,4-Dichlorobenzene	106-46-7	5.0
p-Isopropyltoluene	99-87-6	5.0
1,2-Dichlorobenzene	95-50-1	5.0
n-Butylbenzene	104-51-8	5.0
1,2-Dibromo-3-chloropropane	96-12-8	100
Hexachlorobutadiene	87683	5.0
Napthalene	91203	5.0
1,2,3-Trichlorobenzene	87616	5.0

TABLE II. CHARACTERISTIC MASSES (M/Z) FOR PURGEABLE ORGANIC COMPOUNDS

Analyte	Primary characteristic ion	Secondary characteristic ion(s)
Acetone	43	58
Acrylonitrile	53	52
Acrolein	57	56,55
Benzene	78	-
Bromobenzene	156	77,158
Bromochloromethane	128	49,130,51
Bromodichloromethane	83	85,127
Bromoform	173	171,175,254,250,252,256
Bromomethane	94	96
2-Butanone	43	72,57
n-Butylbenzene	91	92,134
sec-Butylbenzene	105	134
tert-Butylbenzene	119	91,134
Carbon tetrachloride	117	119,121
Chlorobenzene	112	77,114
Chloroethane	64	66
Chloroethyl vinyl ether	63	65,106
Chloroform	83	85
Chloromethane	50	52
2-Chlorotoluene	91	126
4-Chlorotoluene	91	126
1,2-Dibromo-3-chloropropane	75	155,157
Dibromochloromethane	129	127,206,208
1,2-Dibromoethane	107	109,188
Dibromoethane	93	95,174
1,2-Dichlorobenzene	146	111,148
1,3-Dichlorobenzene	146	111,148
1,4-Dichlorobenzene	146	111,148
Dichlorodifluoromethane	85	87
1,1-Dichloroethane	63	65,83,85,98,100
1,2-Dichloroethane	62	64,98,100
1,1-Dichloroethene	96	61,63,98
cis-1,2-Dichloroethene	96	61,98
trans-1,2-Dichloroethene	96	61,98
1,2-Dichloropropane	63	65,112,114

TABLE II. (cont)

Analyte	Primary characteristic ion	Secondary characteristic ion(s)
1,3-Dichloropropane	76	78
2,2-Dichloropropane	77	97
1,1-Dichloropropene	75	110,77
cis-1-3-Dichloropropene	75	77,39
trans-1,3-Dichloropropene	75	77,39
Ethylbenzene	91	106
2-Hexanone	43	57,58,85,100
Isopropylbenzene	105	120
p-Isopropyltoluene	119	134,91
Methylene chloride	84	86,49,51
4-Methyl-2-penatone	43	58,85,100
n-Propylbenzene	91	120
Styrene	104	78,103
1,1,1,2-Tetrachloroethane	131	133,119
1,1,2,2-Tetrachloroethane	83	131,85,133,166
Tetrachloroethene	166	164,168,129,131
Toluene	92	91
1,1,1-Trichloroethane	97	99,61,117,119
1,1,2-Trichloroethane	83	97,85,99,132,134
Trichloroethene	95	97,130,132
Trichlorofluoromethane	101	103
1,2,3-Trichloropropane	75	77
1,2,4-Trimethylbenzene	105	120
1,3,5-Trimethylbenzene	105	120
Vinyl chloride	62	64
o-Xylene	106	91
m,p-Xylene	106	91
<u>INTERNAL STANDARDS/SURROGATES</u>		
Pentafluorobenzene	168	
1,4-Difluorobenzene	114	63,88
Chlorobenzene-d_5	117	82,119
1,4-Dichlorobenzene	152	
4-Bromofluorobenzene	95	174,176
Toluene-d_8	98	70, 100
1,2-Dichloroethane-d_4	65	102

TABLE III. VOLATILE INTERNAL STANDARDS WITH CORRESPONDING ANALYTES ASSIGNED FOR QUANTITATION

Pentafluorobenzene	1,4-Difluorobenzene
Acetone	Bromodichloromethane
Acrolein	2-Chloroethyl vinyl ether
Acrylonitrile	Dibromomethane
Benzene	trans-1,3-Dichloropropene
Bromochloromethane	Toluene-d_8 [a]
Bromomethane	Trichloroethene
2-Butanone	
Carbon disulfide	
Carbon tetrachloride	**Chlorobenzene-d_5**
Chloroethane	
Chloroform	Bromoform
Chloromethane	Chlorodibromomethane
Dichlorodifluoromethane	Chlorobenzene
1,2-Dichloroethane	1,2-Dibromoethane
1,1-Dichloroethane	1,3-Dichloropropane
1,1-Dichloroethene	cis-1,3-Dichloropropene
1,2-Dichloroethane-d_4 [a]	Ethylbenzene
cis-1,2-Dichloroethene	2-Hexanone
trans-1,2-Dichloroethene	4-Methyl-2-pentanone
2,2-Dichloropropane	Styrene
1,1-Dichloropropene	Toluene
Iodomethane	1,1,2-Trichloroethane
Methylene chloride	Tetrachloroethane
1,1,1-Trichloroethane	1,1,1,2-Tetrachloroethane
Trichlorofluoromethane	o,m,p-Xylenes
Trichlorotrifluoroethane	
Vinyl acetate	
Vinyl chloride	**1,4-Dichlorobenzene-d_4**
	Bromobenzene
	n-Butylbenzene
	sec-Butylbenzene
	tert-Butylbenzene
	2-Chlorotoluene
	4-Chlorotoluene
	1,2-Dibromo-3-chloropropane

TABLE III. (cont)

1,4-Dichlorobenzene-d_4 (cont)

1,2-Dichlorobenzene
1,3-Dichlorobenzene
1,4-Dichlorobenzene
n-Propylbenzene
1,1,2,2-Tetrachloroethane
1,2,3-Trichloropropane
1,2,4-Trimethylbenzene
1,3,5-Trimethylbenzene
4-Bromofluorobenzene [a]

[a] Surrogate

TABLE IV. STOCK AND WORKING CALIBRATION SOLUTIONS

Chemical name/concentration	Final concentration Stock (μg/mL)	Working std. (μg/mL)
INTERNAL STANDARD MIX		
Pentafluorobenzene (1000 μg/mL)	50	NA
Chlorobenzene-d_5 (1000 μg/mL)	50	NA
1,4-Difluorobenzene (1000 μg/mL)	50	NA
1,4-Dichlorobenzene-d_4 (1000 μg/mL)	50	NA
CALIBRATION STANDARD MIX		
HSL Custom standard		
Acetone (1000 μg/mL)	100	25
Methyl ethyl ketone (1000 μg/mL)	100	25
Carbon disulfide (1000 μg/mL)	100	25
4-methyl-2-pentanone (1000 μg/mL)	100	25
Vinyl acetate (1000 μg/mL)	100	25
2-Chloroethyl vinyl ether (1000 μg/mL)	100	25
2-Hexanone (1000 μg/mL)	100	25
Acrolein (1000 μg/mL)	100	25
Acrylonitrile (1000 μg/mL)	100	25
Iodomethane (1000 μg/mL)	100	25
Freon 113 (1000 μg/mL)	100	25
Purgeable Surrogate Standard Mix - CLP		
Bromofluorobenzene (250 μg/mL)	50	NA
1,2-Dichloroethane-d_4 (250 μg/mL)	50	NA
Toluene-d_8 (250 μg/mL)	50	NA

TABLE IV. (cont)

Chemical name/concentration	Final concentration Stock (μg/mL)	Working std. (μg/mL)
Volatile Organic Compounds Mix #1		
sec-Butylbenzene (2000 μg/mL)	100	25
tert-Butylbenzene (2000 μg/mL)	100	25
Chlorobenzene (2000 μg/mL)	100	25
2-Chlorotoluene (2000 μg/mL)	100	25
4-Chlorotoluene (2000 μg/mL)	100	25
1,2-Dichlorobenzene (2000 μg/mL)	100	25
1,3-Dichlorobenzene (2000 μg/mL)	100	25
1,4-Dichlorobenzene (2000 μg/mL)	100	25
Isopropylbenzene (2000 μg/mL)	100	25
n-Propylbenzene (2000 μg/mL)	100	25
o-Xylene (2000 μg/mL)	100	25
p-Xylene (2000 μg/mL)	100	25
Volatile Organic Compounds Mix #2		
Benzene (2000 μg/mL)	100	25
Bromobenzene (2000 μg/mL)	100	25
n-Butylbenzene (2000 μg/mL)	100	25
Ethylbenzene (2000 μg/mL)	100	25
p-Isopropyltoluene (2000 μg/mL)	100	25
Naphthalene (2000 μg/mL)	100	25
Styrene (2000 μg/mL)	100	25
Toluene (2000 μg/mL)	100	25
1,2,3-Trichlorobenzene (2000 μg/mL)	100	25

TABLE IV. (cont)

Chemical name/concentration	Final concentration Stock (μg/mL)	Working std. (μg/mL)
Volatile Organic Compounds Mix #2 (cont)		
1,2,4-Trichlorobenzene (2000 μg/mL)	100	25
1,2,4-Trimethylbenzene (2000 μg/mL)	100	25
1,3,5-Trimethylbenzene (2000 μg/mL)	100	25
m-Xylene (2000 μg/mL)	100	25
Volatile Organic Compounds Mix #3		
1,2-Dibromo-3-chloropropane (2000 μg/mL)	100	25
1,2-Dibromoethane (2000 μg/mL)	100	25
1,2-Dichloroethane (2000 μg/mL)	100	25
1,2-Dichloropropane (2000 μg/mL)	100	25
1,3-Dichloropropane (2000 μg/mL)	100	25
1,1-Dichloropropene (2000 μg/mL)	100	25
1,3-Dichloropropene (4000 μg/mL) *	400	50
Hexachlorobutadiene (2000 μg/mL)	100	25
1,1,1,2-Tetrachloroethane (2000 μg/mL)	100	25
1,1,2,2-Tetrachloroethane (2000 μg/mL)	100	25
1,1,2-Trichloroethane (2000 μg/mL)	100	25
Trichloroethene (2000 μg/mL)	100	25
1,2,3-Trichloropropane (2000 μg/mL)	100	25

* Mixture of cis-1,3-dichloropropene and trans-1,3-dichloropropene, 2000 μg/mL each.

Volatile Organic Compounds Mix #4		
Bromochloromethane (2000 μg/mL)	100	25
Bromoform (2000 μg/mL)	100	25

TABLE IV. (cont)

Chemical name/concentration	Final concentration Stock (μg/mL)	Working std. (μg/mL)
Volatile Organic Compounds Mix #4 (cont)		
Carbon tetrachlororide (2000 μg/mL)	100	25
Chloroform (2000 μg/mL)	100	25
Dibromomethane (2000 μg/mL)	100	25
1,1-Dichloroethane (2000 μg/mL)	100	25
2,2-Dichloropropane (2000 μg/mL)	100	25
Tetrachloroethene (2000 μg/mL)	100	25
1,1,1-Trichloroethane (2000 μg/mL)	100	25
Volatile Organic Compounds Mix #5		
Bromodichloromethane (2000 μg/mL)	100	25
Dibromochloromethane (2000 μg/mL)	100	25
1,1-Dichloroethene (2000 μg/mL)	100	25
cis-1,2-Dichloroethene (2000 μg/mL)	100	25
trans-1,2-Dichloroethene (2000 μg/mL)	100	25
Methylene chloride (2000 μg/mL)	100	25
VOC #6 CALIBRATION STANDARD MIX		
Volatile Organic Compounds Mix #6		
Bromomethane (2000 μg/mL)	100	25
Chloromethane (2000 μg/mL)	100	25
Chloroethane (2000 μg/mL)	100	25
Dichlorodifluoromethane (2000 μg/mL)	100	25
Trichlorofluoromethane (2000 μg/mL)	100	25
Vinyl chloride (2000 μg/mL)	100	25

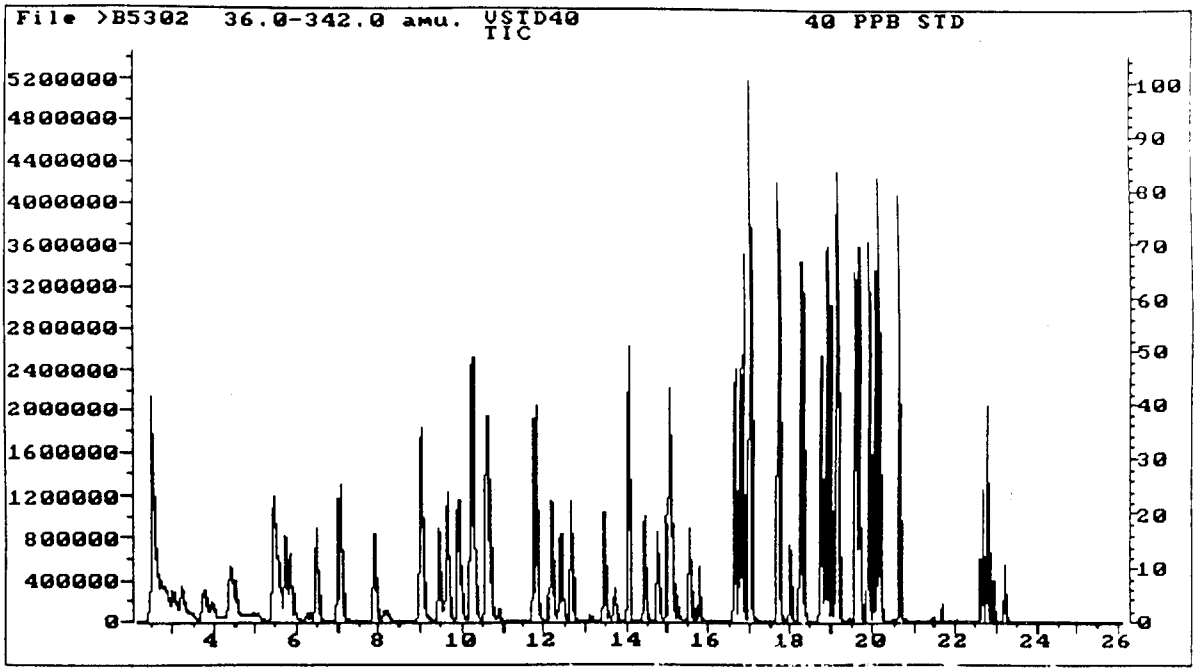

Fig. 1. Sample Chromatogram

VOLATILE ORGANIC COMPOUNDS IN WATER: PRECISION DYNATECH AUTOSAMPLER CAPILLARY COLUMN TECHNIQUE — GC/MS (EPA SW846 METHOD 8260)

Analyte: Volatile organic compounds	**Method No.:** EO730
Matrix: Water	**Procedure:** Purge/trap GC/MS, capillary column
Effective Date: 12/01/90	**Author:** Laura Kelly Matthew Monagle

SAFETY NOTE: Before beginning this procedure, read all of the Material Safety Data Sheets for the chemicals listed in Sec. 6. Read Sec. 4.3. of the EM-9 Safety Manual for information on personal protective clothing and equipment. Read Sec. 11 of this procedure and Source Materials 12.3 and 12.4 for proper waste disposal practices.

1. Principle of Method

1.1. Samples are loaded into the purge vessels supplied for use with the Precision Dynatech Autosampler. Volatile organic compounds are purged from the sample onto a sorbent material. These analytes are then desorbed into a gas chromatograph (GC). The column is temperature-programmed and analytes are separated and are detected with a mass spectrometer (MS).

1.2. Qualitative identification is performed by analyzing standards under the same conditions used for samples and comparing resultant mass spectra and GC retention times. Each identified component is quantified by relating the MS response for an appropriately selected ion produced by that compound to the MS response for another ion produced by an internal standard.

2. Analytes and Limit of Quantitation

Internal Standards	Surrogates
Pentafluorobenzene	1,2-Dichloroethane-d_4
1,4-difluorobenzene	Toluene-d_8
1,4-difluorobenzene-d_4	4-Bromofluorobenzene
Chlorobenzene-d_5	

2.1. Table I is a list of volatile organic compounds and their reporting limits of quantitation (LOQs). (Tables I-IV are found at the end of this procedure.)

2.2. The reporting limit of quanititation for the target VOCs is 5 μg/L except for the following compounds.

Compound	µg/L
Chloromethane	10.0
Vinyl chloride	10.0
Bromomethane	10.0
Chloroethane	10.0
Acetone	20.0
Acrolein	100.0
Acrylonitrile	100.0
2-Chloroethyl vinyl ether	100.0
Vinyl acetate	10.0
2-Butanone	20.0
4-Methyl-2-pentanone	20.0
2-Hexanone	20.0
1,2-Dibromo-3-chloropropane	10.0

Saturation of ions used for quantitation can occur at a concentration above 200 ng/mL. If saturation occurs, the sample must be diluted and reanalyzed.

2.3. Table II lists all the volatile organic compounds and their characteristic masses. The volatile internal standards with the corresponding analytes are listed in Table III. Fig. 1 is a chromatogram showing all volatile organic compounds, surrogates, and internal standards.

3. Interferences

3.1. Impurities in the purge gas and solvent vapors in the laboratory can contaminate samples. The analytical system must be demonstrated to be free from contamination under the condition of the analysis by running laboratory reagent blanks (i.e., method blanks). The use of non-TFE tubing, non-TFE thread sealants, or flow controllers with rubber components in the purging device must be avoided.

3.2. Samples can be contaminated by diffusion of volatile organics (particularly fluorocarbons and methylene chloride) through the septum seal into the sample during storage and handling. A trip blank, prepared from reagent water and carried through the holding period and the analysis protocol, serves as a check on such contamination. One trip blank per request group should be analyzed.

3.3. Contamination by carryover can occur whenever high-level and low-level samples are sequentially analyzed. Whenever an unusually concentrated sample is encountered, all following samples must be reanalyzed if carryover is suspected, or a method blank should follow until the contamination has been eliminated.

3.4. The volatile analysis laboratory should be completely free of solvents on the volatile target component list.

4. Collection and Storage of Samples

4.1. Water samples are collected in 40-mL screw-cap VOA vials with a Teflon-lined silicone septa. The vials and septa should be washed with soap and water, rinsed with distilled deionized water, placed in an oven, and dried at 70°C for approximately 1 h.

4.2. Water samples are gently introduced into the vial to reduce agitation, which might drive off volatile compounds, and to avoid the introduction of air bubbles within the vial. The vial must be filled until there is a meniscus over the lip of the vial. Four drops of concentrated HCl are carefully added to each sample vial as a preservative to extend holding times. The screw-top lid with the septum, Teflon side toward the sample, should be tightened onto the vial. After tightening the lid, the vial should be inverted and tapped to check for air bubbles. If any air bubbles are present another sample must be collected. Two VOA vials should be filled at each sample location.

4.3. All sampling vials must be refrigerated between 0 and 4°C.

4.4. The holding time for water samples preserved with concentrated HCl is 14 days from the date of collection. For unpreserved water samples, the holding time is 7 days from the date of collection.

5. Apparatus

5.1. Purge and trap configuration.

5.1.1. The Precision Dynatech Autosampler is designed for in-situ purging of both soils and water. The sample is loaded into glassware supplied with the autosampler. Internal standard and surrogates are added by the Precision Dynatech Autosampler and purging takes place in the glass vessel.

5.1.2. The trap must be at least 25 cm long and have an i.d. of at least 0.2667 cm. Starting from the inlet, the trap must contain the following amounts of absorbents: 1/3 2,6-diphenylene oxide polymer -60/80 mesh, chromatographic grade (Tenax GC or equivalent), 1/3 of silicia gel -35/60 mesh (Davison grade 15 or equivalent), and 1/3 coconut charcoal. Packed traps can be purchased through Supelco, Tekmar, or OI. If it is not necessary to analyze for dichlorodifluoromethane or other fluorocarbons of similar volatility, the charcoal can be eliminated and the polymer increased to fill 2/3 of the trap. Before initial use, the trap should be conditioned overnight at 180°C by backflushing with an inert gas flow of at least 20 mL/min. Before daily use the trap should be conditioned for 10 min at 180°C with backflushing. Traps normally last 2-3 months when used daily. Some signs of deteriorating traps are: uncharacteristic recoveries of surrogate, especially toluene-d_8, loss in

response of internal standards during a 12 h shift, or a rise in the baseline during the early portion of the scan. The trap should be replaced if any of these symptoms occur.

5.1.3. The desorber should be capable of rapidly heating (10°C/s) the trap to 180°C for desorption. The trap bakeout temperature should not exceed 220°C.

5.2. Gas chromatography/mass spectrometer/data system.

5.2.1. The GC must be temperature-programmable and should be equipped with adjustable differential flow controllers so that the column flow rate will be reproducible throughout desorption and temperature program operation. The GC is interfaced to the MS with a jet separator or is directly coupled.

5.2.2. Gas chromatographic column: 70-m x 0.53-mm-id DB624 (J & W) with 3-μm film thickness. The flow rate of helium carrier gas should be established at ~15 mL/min.

5.2.3. Mass spectrometer: Mass-spectral data are obtained with electron-impact ionization at a nominal electron energy of 70 eV. The mass spectrometer scans from 35 to 350 amu every 1 s or less and must produce a mass spectrum that meets all criteria in Step 7.1.1 when 50 ng of 4-bromofluorobenzene is introduced into the GC.

5.2.4. Data system: A computer system that allows the continuous acquisition and storage on machine-readable media of all mass spectra obtained throughout the duration of the chromatographic program must be interfaced to the mass spectrometer. The computer must have software that allows searching any GC/MS data file for ions of a specified mass and plotting such ion abundances versus time or scan number. This type of plot is defined as an extracted ion current profile (EICP). Software must also be available that allows integrating the abundances in any EICP between NIST and/or EPA mass-spectral libraries.

5.3. Microsyringes: 10-, 25-, 100-, and 500-μL, for injecting the appropriate standards into the reagent water.

5.4. Syringes: 5- or 25-mL, for measuring the required aliquot of reagent water.

5.5. Balance: analytical, capable of accurately weighing 0.001 g.

5.6. Micro reaction vessels: 2- or 3-mL with Teflon-lined miniert valves, for the storage of stock or secondary standard solutions.

5.7. Disposable Pasteur pipettes: used for transferring stock or secondary standard solutions from the volumetric flask to the micro reaction vessels.

6. Reagents/Standards

6.1. Methanol (CH_3OH). Pesticide quality or equivalent, demonstrated to be free of analytes. Must be stored apart from other solvents.

6.2. Reagent water. Must be purged with an inert gas for at least 30 min before use. Water must be free of interferents at the limit of quantitation (LOQ). Alternatively, HPLC grade water may be purchased. Purity of water used must be verified by GC/MS analysis.

6.3. Stock solutions. All instructions for preparation of stock solutions and dilutions are in the VOA standards preparation notebook located in Room 115, TA-59. See Table IV.

6.4. Instructions for storage of all standards, and expiration dates are found in the VOA standards preparation notebook. Expiration dates are to be strictly enforced.

6.5. Surrogate standards. The surrogates used are 1,2-dichloroethane-d_4, toluene-d_8, and 4-bromofluorobenzene.

6.6. Internal standards. The internal standards used are chlorobenzene-d_5, 1-4-difluorobenzene, 1,4-dichlorobenzene-d_4, and pentafluorobenzene.

6.7. 4-Bromofluorobenzene (BFB) standard. A standard solution containing 50 ng/μL of BFB in methanol used for verifying the tune of the MS.

6.8. Calibration standards. Secondary calibration standards at a minimum of 5 concentration levels are prepared from calibration stock standards. The solutions are prepared in 5- or 25-mL aliquots of reagent water. The five concentration levels are: 20, 50, 100, 150, and 200 ng/mL. A 5.0-mg/mL concentration level is optional.

6.9. Matrix spiking standards. Matrix spiking standard is prepared from volatile organic compounds which are representative of the compounds being investigated. The compounds used are 1,1-dichloroethene, benzene, trichloroethene, toluene, and chlorobenzene. A 10-μL aliquot of the matrix spike standard is used for 5-mL samples (50-μL aliquot for 25-mL aqueous samples).

7. Calibration

7.1. Initial calibration.

7.1.1. Each GC/MS system must be hardware-tuned to meet the criteria listed below for a direct injection or purging of 50 ng of 4-bromofluorobenzene. Analysis can not proceed until criteria are met.

Mass	Relative Abundance Criteria
50	15 to 40% of mass 95
75	30 to 60% of mass 95
95	base peak, 100% relative abundance
96	5 to 9% of mass 95
173	<2% of mass 174
174	>50% of mass 95
175	5 to 9% of mass 174
176	≥95% but ≤101% of mass 174
177	5 to 9% of mass 176

7.1.2. Recommended GC/MS operating conditions.

Electron energy:	70 V (nominal)
Mass range:	35-350 amu
Scan rate:	2 scan/s or less
Initial column temperature:	37°C
Initial column holding time:	4 min
Column temperature program:	4°C/min to 100°C, hold 1 min; 15°C min to 230°C
Final column temperature:	230°C
Final column holding time:	0 min
Column bake out temperature:	230°C
Column bake out holding time:	0 min
Carrier gas:	Helium at ~15 mL/min

7.1.3. A set of at least 5 calibration standards containing the method analytes is required. The calibration standard concentrations used are 20, 50, 100, 150, and 200 ng/mL. The calibration standard is prepared by adding the appropriate volume of the secondary standard mix to a 5-mL or 25-mL aliquot of reagent water.

AMOUNT OF WORKING CALIBRATION STANDARD AND VOC #6 STANDARD ADDED		
Std. conc.	5-mL aliquot	25-mL aliquot
	amount added (μL)	
20 μg/mL	4.0	20
50 μg/mL	10	50
100 μg/mL	20	100
150 μg/mL	30	150
200 μg/mL	40	200

7.1.4. The response factor, average response factor, and percent relative standard deviation for each compound will be calculated using the calibration program in the Hewlett Packard 1000 RTE system. A hard copy of the calibration report (produced by CBRPT) and copies of the quant reports with chromatograms are made and stored in association with the instrument.

7.1.5. Five system performance check compounds (SPCCs), are checked for a minimum average response factor (RF): chloromethane, 1,1-dichloroethane, bromoform, 1,1,2,2-tetrachloroethane, and chlorobenzene. The minimum acceptable average RF for these compounds should be 0.300 (0.250 for bromoform). These compounds typically have RFs of 0.4-0.6 and are used to check overall instrument performance and/or degradation caused by contaminated lines or active sites in the system.

7.1.5.1. Chloromethane. This compound is easily lost as a result of fast purge flow, or because the stock or working mixture of the calibration standard (VOC #6 mix only) is degrading. The purge gas (helium) flow rate should be 25-40 mL/min on the purge-and-trap device. Optimize the flow rate to provide the best response for chloromethane and bromoform.

7.1.5.2. Bromoform. This compound will most likely be purged very poorly if the purge flow is too slow. Cold spots and/or active sites in the transfer line may adversely affect response.

7.1.5.3. Tetrachloroethane and 1,1-dichloroethane. These compounds are degraded by contaminated transfer lines in purge-and-trap systems and/or active sites in trapping materials.

7.1.6. Continuing calibration check (CCC) compounds are used as a measure of the linearity of the analyte response factors. The percent relative standard deviation (%RSD) is checked for the CCCs. These compounds are 1,1-dichloroethene, chloroform, 1,2-dichloropropane, toluene, ethylbenzene, and vinyl chloride. The maximum %RSD for these compounds is 30%. The %RSD for all analytes should be <30%.

7.1.7. Once the initial calibration (containing the response factor, average response factor, and percent relative standard deviation for each analyte of the five different calibration standards) has been generated, the analyst can proceed with daily GC/MS calibration.

7.2. Continuing daily calibration.

7.2.1. Before samples are analyzed, inject or purge 50 ng of the 4-bromofluorobenzene (BFB) standard (1 μL of the 25-μg/mL 4-bromofluorobenzene solution). The resultant mass spectra for the BFB must meet all the criteria given in Step 7.1.1. This procedure must be performed every 12 h of analysis. The 12-h sequence begins at the time at which the BFB is injected into the GC/MS system.

7.2.2. The initial calibration curve for each compound must be checked and verified every 12 h before analyzing samples. This is accomplished by analyzing a 50-ng/mL continuing calibration standard and checking the SPCCs and CCCs.

7.2.3. The minimum response factor for the SPCCs is 0.300 (0.250 for bromoform). Some possible problems are standard mixture degradation, contamination at the front end of the analytical column, and active sites in the column or chromatographic system.

7.2.4. The CCCs are used to check the validity of the initial calibration by calculating the percent difference between the average response factor from the initial calibration and the response factor from the current verification check standard. If the percent difference for any compound is 20%, the laboratory should consider this a warning limit. If the percent difference for each CCC is <25%, the initial calibration is assumed to be valid. If this criterion is not met (> 25% difference) for any one CCC, corrective action must be taken. The percent difference for all analytes should be less than or equal to 25%. Corrective action can include, but is not limited to, reanalysis of the verification check standard, cutting a portion of the column, or using a new working calibration standard. If a source of the problem cannot be determined after corrective action has been taken, a new five-point calibration (initial calibration) must be generated. See Step 7.1. Both SPCC and CCC criteria **must** be met before quantitative sample analysis begins.

8. Procedure

8.1. BFB tuning criteria and continuing calibration criteria must be met before analysis of samples can begin.

8.2. Parameters.

O I Sample Concentrator	
Purge time:	8-10 min
Trap temperature:	~28°C (purging)
Trap temperature:	35°C (desorb preheat)
Desorb time:	2-4 min
Trap temperature:	205°C (desorb)
Trap bake time:	11-15 min
Trap temperature:	215°C (bakeout)
Transfer lines:	100°C
Valve temperature:	80°C
Purge flow:	25-40 mL/min
Purging temperature:	40°C

8.3. A sample batch typically consists of a BFB, continuing calibration, reagent water blank, and samples up to the 12-h limit on BFB tune. Samples are set up as described in the following sections.

8.4. Either a 5-mL or 25-mL sample aliquot can be used. A separate initial calibration is required for a 5-mL or 25-mL sample aliquot (an initial calibration for the 5-mL aliquot analysis and an initial calibration for the 25-mL aliquot analysis). Lower limits of quantitation can be achieved through a 25-mL aliquot analysis.

8.5. Remove the plunger from a 5-mL or 25-mL syringe. Open the sample vial, which has come to ambient temperature, and carefully pour the sample into the syringe barrel to just short of overflowing. (While pouring the sample into the syringe barrel, place a gloved finger over the opening of the syringe or attach a closed syringe valve to prevent the sample from leaking out). Replace the syringe plunger and compress the sample. If a syringe valve was used, open the valve and vent any residual air while adjusting the sample volume to 5.0 or 25 mL, which ever is appropriate. The process of taking an aliquot destroys the validity of the liquid sample for future analysis; therefore, if only one VOA vial is available for analysis, the analyst should fill a 25-mL VOA vial at this time to protect against possible loss of sample integrity. (When taking the aliquot, a syringe valve must be used in order to prevent air from leaking into the syringe. The syringe is stored in the refrigerator at -4°C for no longer than 24 h.) Measure the pH of an aliquot of the water to determine preservation status and record on the VOA benchsheet.

8.6. Place the contents of the syringe into a partially assembled Precision Dynatech Autosampler vial (with the bottom septa and cap attached), add a magnet, and cap the vial.

8.7 Place the sealed autosampler vial on the autosampler. The internal standard/purgeable surrogates are added automatically. Check the ISM syringe content before each sequence run (ISM/PSS). If the volume is low (less than 1 mL), refill according to the directions in the Precision Manual. The batch sequence can then be started.

8.8 The trapped materials are introduced to the GC column by rapidly heating the trap to 180°C while backflushing the trap with helium at 15 mL/min for 2 min.

8.9 To avoid contamination of the next sample, bake the trap at 180°C for 11 min. Return the trap to ambient temperature and analyze the next sample.

8.10 For each sample analyzed, including BFB and continuing calibrations, an entry must be made in the sample injection log associated with each instrument. This entry must be made within 24 h of data acquisition. This entry incudes factors such as date and time sample was run, internal standard value, and surrogate recoveries.

8.11 If the initial analysis of a sample has a concentration of analytes that exceeds the initial calibration range (higher than 200 ng/mL), the sample will need to be reanalyzed at a dilution (see Step 8.13). Secondary-ion quantitation is allowed only when there are sample interferences with the primary ion. When a sample is analyzed that has saturated ions from a compound, the analysis must be followed by a blank water analysis. Sample analysis may not resume until a blank can be analyzed and found free of interferences. If this occurs during an automated run, reanalyze all following samples if carryover from the saturated compound is suspected.

8.12 The following procedure is appropriate for diluting purgeable samples. Perform all steps without delays until the diluted sample is in a gas-tight syringe.

8.12.1. Prepare dilutions in a volumetric flask (10- to 100-mL). Select the appropriate volumetric flask that will allow the necessary dilution.

8.12.2. Calculate the approximate volume of water to be added to the volumetric flask and add slightly less than this quantity of water.

8.12.3. Inject the proper aliquot of sample from the syringe prepared in Step 8.5 into the flask. Dilute the sample to volume with reagent water. Cap the flask and gently invert three times. Resume analysis according to Step 8.5.

8.12.4. An example of a 50% sample dilution is as follows: add approximately 4 mL of reagent water to a 10-mL volumetric flask. Add 5 mL of the sample and dilute to volume with reagent water.

8.12.5. If one or more of the surrogate spiking compounds are not within the control limits and/or the internal standard areas are +100%/-50% of the continuing calibration in a sample, reanalyze that sample. See Step 9.2 for details.

9. Quality Control

9.1. A method blank consisting of reagent water is automatically spiked with ISM/PSS mix. A method blank is analyzed at the beginning of each instrumental batch (all samples of similar matrix analyzed together within the same 12-h period). The method blank must be free of any target volatile organic components at or above the limit of quantitation (LOQ) with the exception of acetone, methylene chloride, 2-butanone and toluene. These compounds can be detected in the method blank up to 5 times their LOQ. The surrogate recoveries should be within the control limits listed in Step 9.2. Analysis should not proceed until these requirements are met.

9.2. The following surrogates are spiked into each sample and analyzed as a measure of analyte recovery: 1,2-dichloroethane-d_4, toluene-d_8, and 4-bromofluorobenzene. If one or more of the surrogate spiking compounds are not within the control limits, those samples should be reanalyzed. If the reanalysis demonstrates similar results and the surrogate recoveries in the associated method blank are within the control limits, the out-of-control situation could be attributed to matrix effect and the results from the initial analysis should be reported. If the reanalysis of the sample has surrogate recoveries and/or internal standard areas within the control limits, the out-of-control condition could be due to analyst error or to a degrading surrogate spiking mix. In this case the results from the reanalysis should be reported.

SURROGATE RECOVERY CONTROL LIMITS

1,2-Dichloroethane-d_4	76-114%
Toluene-d_8	88-110%
4-Bromofluorobenzene	86-115%

9.3. A matrix spike, matrix spike duplicate, and matrix spike control are analyzed with every analytical batch and/or request group. One of the submitted samples is used as the matrix media. It is prepared as a normal sample and 10.0 μL of the matrix spike mix is added to the media prior to purging. A matrix spike control is analyzed by spiking 10.0 μL of matrix spike mix into 5 mL of reagent water. This matrix spike control sample is used in interpretation of matrix spike/matrix spike duplicate results and in distinguishing a genuine matrix effect from a bad stock solution. Matrix spike and matrix spike duplicate

samples also measure analyte recovery from a sample. A sample submitted by a customer will be used as the matrix media by adding 10 μL of the matrix spike mixture to a 5-mL sample aliquot to be purged.

9.4. "Blind" QC samples are received from the Quality Assurance section at a rate of 10% of the total samples analyzed. These samples are analyzed in exactly the same manner as submitted samples.

9.5. A duplicate of a submitted sample may be analyzed in order to measure precision of the environmental measurements. A duplicate is typically analyzed when a request group has >15 samples or when a request group does not have a sample used as a matrix spike and matrix spike duplicate.

9.6. Samples certified by the American Association for Laboratory Accreditation (A2LA) should be analyzed once per month.

9.7. Water pollution and drinking water samples, provided by the US Environmental Protection Agency for evaluation of laboratory performance, are each analyzed twice a year as part of the quality control program.

10. Data Interpretation

10.1. Qualitative analysis.

10.1.1. An analyte is identified by comparison of the sample mass spectrum with the mass spectrum of a standard of the compound from a standard (standard reference spectrum). The standard reference spectrum is obtained through analysis of a calibration standard. Two criteria must be satisfied to verify identification: (1) elution of the sample component at the same GC relative retention time (RRT) as that component in the daily standard; and (2) correspondence of the mass spectra of the sample component and the standard component.

10.1.1.1. The sample component RRT must agree within ±0.06 units of the RRT of the standard component in the daily calibration. If coelution of interfering components prohibits accurate assignment of the sample component RRT from the total ion chromatogram, the RRT should be assigned by using extracted ion current profiles (EIPCs) for ions unique to the component of interest.

10.1.1.2. All ions present in the standard mass spectrum at a relative intensity >10% of the primary ion must be present in the sample spectrum. The relative intensities of these ions must agree within ± 20% between the standard and sample spectra.

EXAMPLE: For an ion with an abundance of 50% in the standard spectra, the corresponding sample ion abundance must be between 30% and 70%.

10.1.2. For samples containing components not associated with the calibration standards (non-target volatile organic components), a library search may be made for the purpose of tentative identification. Ten organic compounds of greatest concentration which are not identified as part of the calibration standard may be identified. Non-target volatile organic components with a response of <10% of the nearest internal standard are not required to be searched. Comparison of sample spectra with the spectra from the library searches will assign a tentative identification.

10.1.2.1. Relative intensities of major ions in the reference spectrum (ions with intensities >10% of the most abundant ion) should be present in the sample spectrum.

10.1.2.2. The relative intensities of the major ions should agree within ±20%.

EXAMPLE: For an ion with an abundance of 50% in the standard spectrum, the corresponding sample ion abundance must be between 30 and 70%.

10.1.2.3. Molecular ions present in the reference spectrum should be present in the sample spectrum.

10.1.2.4. Ions present in the sample spectrum but not in the reference spectrum should be reviewed for possible background contamination or presence of coeluting compounds.

10.1.2.5. Ions present in the reference spectrum but not in the sample spectrum should be reviewed for possible subtraction from the sample spectrum because of background contamination or coeluting peaks.

If the compound does not meet the identification criteria listed above, the compound will be reported as unknown.

10.2. Quantitative analysis.

10.2.1. When a compound has been identified, the quantitation of that compound will be based on the integrated abundance from the EICP of the primary characteristic ion (see Table II). The compound will be quantitated using an internal standard technique. The internal standard used will be the one nearest the retention time of a given analyte.

10.2.1.2. The concentration of each identified analyte in the sample is calculated as follows:

$$\text{concentration (ng/mL)} = \frac{(Ax)\ (Is)}{(Ais)(RF)(Vo)} ,$$

where Ax = area of characteristic ion for compound being measured,
Is = amount of internal standard injected (ng),
Ais = area of characteristic ion for the internal standard,
RF = response factor for compound being measured, and
Vo = volume of water purged (mL), taking into consideration any dilutions made.

10.2.1.3. The HP 1000 RTE system will automatically calculate the concentration (ng/mL) of the analyte detected when a report is generated.

10.2.2. Where applicable, an estimate of concentration for non-target volatile organic components in the sample should be made. The areas Ax and Ais (defined in Step 10.2.1.2) should be from a total ion chromatogram and the RF for the compound should be assumed to be 1. The concentration obtained should be reported indicating (1) that the value is an estimate and (2) which internal standard was used to determine concentration. The nearest internal standard free of interferences is used.

10.2.3. Results are reported without method blank correction. Method blanks will be reported as discrete samples.

11. Proper Waste Disposal Practices

11.1. General waste management.

11.1.1. Each analyst within the section shall receive Waste Generator training from EM-8 within 90 days of date of hire.

11.1.2. Wherever possible, the generation of waste shall be minimized through reduction, reuse or recycling. Wherever possible, containers should be segregated to reflect the nature of the hazardous waste and the eventual waste disposal methods. For example, chlorinated solvent wastes should be segregated from flammable, nonchlorinated solvents and >50-ppm contaminated PCB waste should be segregated from <50-ppm PCB

contaminated waste. This is especially important in analysis areas where the waste generated is considered to be mixed waste.

11.1.3. Waste is categorized using a Waste Profile Form from EM-8. Upon completion of a Waste Profile Form, the waste is disposed of by completing a Waste Disposal Request Form from EM-7. Approximately 30 days is required for the disposal of waste after the completion of the listed forms.

11.2. Solid waste.

11.2.1. Solid hazardous waste, such as contaminated paper towels, pipettes, spent syringes, and glass vials, is accumulated in a covered plastic container lined with a plastic bag. The container is labeled with a hazardous waste label identifying the hazard, the type of material being stored (i.e., pipettes, paper towels, etc.), the accumulation start date, and the laboratory of origin.

11.2.2. The waste container is opened only for the time necessary to dispose of the waste.

11.3. Liquid waste.

11.3.1. Liquid wastes such as spent samples and spent solvents that are not reusable, are accumulated in glass or steel containers appropriate for the type of sample being stored. For example, caustic materials should be stored in glass containers whereas spent solvents that are not to be recycled should be stored in metal containers.

11.3.2. All containers storing hazardous liquid materials must be secondarily contained. The container is labeled with a hazardous waste label identifying the hazard, the type of material being stored, the accumulation start date, and the laboratory of origin.

11.3.3. The waste container is opened only for the time necessary to dispose of the waste.

11.4. Unused samples.

11.4.1. Unused environmental samples are returned to the Sample Management section for eventual disposal.

12. Source Materials

12.1. "Test Methods for Evaluating Solid Waste, Physical/Chemical Methods," Laboratory Manual Vol. 1B, Method 8260, report no. SW-846 (November 1986).

12.2. "Statement of Work for Organics Analysis," USEPA Contract Laboratory Program (October 1986).

12.3. "Hazardous and Mixed Waste," Administrative Requirement 10-3, in *Environment, Safety, and Health Manual*, Los Alamos National Laboratory Manual, Chapter 1 (most recent edition).

12.4 "Low-Level Radioactive Solid Waste," Administrative Requirement 10-2, in *Environment, Safety, and Health Manual*, Los Alamos National Laboratory Manual, Chapter 1 (most recent edition).

TABLE I. VOLATILE ORGANIC COMPOUNDS

Analyte	CAS No.	LOQ µg/L
Chloromethane	74-87-3	10
Vinyl chloride	75-01-4	10
Bromomethane	74-83-9	10
Chloroethane	75-00-3	10
Acetone	67-64-1	20
Acrolein	107-02-8	100
Acrylonitrile	107-13-1	100
2-Chloroethyl vinyl ether	110-75-8	100
Dichlorodifluoromethane	75-71-8	10
Iodomethane	74-88-4	5.0
Trichlorotrifluoroethane	76-13-1	5.0
Trichlorofluoromethane	75-69-4	5.0
Methylene Chloride	75-09-2	5.0
1,1-Dichloroethene	75-35-4	5.0
Carbon Disulfide	75-15-0	5.0
trans-1,2-dichloroethene	156-60-5	5.0
1,1-Dichloroethane	75-34-3	5.0
cis-1,2-Dichloroethene	156-59-2	5.0
Bromochloromethane	74-97-5	5.0
Chloroform	67-66-3	5.0
1,2-Dichloroethane	107-06-2	5.0
1,1-Dichloropropane	563-58-6	5.0
Vinyl acetate	108-05-4	10
2-Butanone	78-93-3	20
2,2-Dichloropropane	594-20-7	5.0
1,1,1-Trichloroethane	71-55-6	5.0
Carbon tetrachloride	56-23-5	5.0
Benzene	71-43-2	5.0

TABLE I. (cont)

Analyte	CAS No.	LOQ µg/L
1,2-Dichloropropane	78-87-5	5.0
Trichloroethene	79-01-6	5.0
Dibromomethane	74-95-3	5.0
Bromodichloromethane	75-27-4	5.0
trans-1,3-Dichloropropene	1006-10-26	5.0
cis-1,3-Dichloropropene	1006-10-15	5.0
1,1,2-Trichloroethane	79-00-5	5.0
1,3-Dichloropropane	142-28-9	5.0
Chlorodibromomethane	124-48-1	5.0
Bromoform	75-25-2	5.0
4-Methyl-2-pentanone	10-81-01	20
Toluene	108-88-3	5.0
2-Hexanone	59-17-86	20
1,2-Dibromoethane	106-93-4	5.0
Tetrachloroethene	127-18-4	5.0
Chlorobenzene	108-90-7	5.0
1,1,1,2-Tetrachloroethane	630-20-6	5.0
Ethylbenzene	100-41-4	5.0
o,m,p-Xylene (mixed)	133-020-7	5.0
Styrene	100-42-5	5.0
Bromoform	75-25-2	5.0
1,1,2,2-Tetrachloroethane	79-34-5	5.0
1,2,3-Trichloropropane	96-18-4	5.0
Isopropylbenzene	98-82-8	5.0
Bromobenzene	108-86-1	5.0
n-Propylbenzene	103-65-1	5.0
2-Chlorotoluene	95-49-8	5.0
4-Chlorotoluene	106-43-4	5.0

TABLE I. (cont)

Analyte	Cas No.	LOQ µg/L
1,3,5-Trimethylbenzene	108-67-8	5.0
tert-Butylbenzene	98-06-6	5.0
1,2,4-Trimethylbenzene	95-63-6	5.0
sec-Butylbenzene	135-98-8	5.0
1,3-Dichlorobenzene	541-73-1	5.0
1,4-Dichlorobenzene	106-46-7	5.0
p-Isopropyltoluene	99-87-6	5.0
1,2-Dichlorobenzene	95-50-1	5.0
n-Butylbenzene	104-51-8	5.0
1,2-Dibromo-3-chloropropane	96-12-8	10

TABLE II. CHARACTERISTIC MASSES (M/Z) FOR PURGEABLE ORGANIC COMPOUNDS

Analyte	Primary characteristic ion	Secondary characteristic ion(s)
Acetone	43	58
Actylonitrile	53	52
Acrolein	57	56,55
Benzene	78	-
Bromobenzene	156	77,158
Bromochloromethane	128	49,130,51
Bromodichloromethane	83	85,127
Bromoform	173	171,175,254,250,252,256
Bromomethane	94	96
2-Butanone	43	72,57
n-Butylbenzene	91	92,134
sec-Butylbenzene	105	134
tert-Butylbenzene	119	91,134
Carbon tetrachloride	117	119,121
Chlorobenzene	112	77,114
Chloroethane	64	66
Chloroethyl vinyl ether	63	65,106
Chloroform	83	85
Chloromethane	50	52
2-Chlorotoluene	91	126
4-Chlorotoluene	91	126
1,2-Dibromo-3-chloropropane	75	155,157
Dibromochloromethane	129	127,206,208
1,2-Dibromoethane	107	109,188
Dibromoethane	93	95,174
1,2-Dichlorobenzene	146	111,148
1,3-Dichlorobenzene	146	111,148
1,4-Dichlorobenzene	146	111,148
Dichlorodifluoromethane	85	87
1,1-Dichloroethane	63	65,83,85,98,100
1,2-Dichloroethane	62	98,64,100
1,1-Dichloroethene	96	61,63,98
cis-1,2-Dichloroethene	96	61,98
trans-1,2-Dichloroethene	96	61,98
1,2-Dichloropropane	63	112,65,114

TABLE II. (cont)

Analyte	Primary characteristic ion	Secondary characteristic ion(s)
1,3-Dichloropropane	76	78
2,2-Dichloropropane	77	97
1,1-Dichloropropene	75	110,77
cis-1-3-Dichloropropene	75	77,39
trans-1,3-Dichloropropene	75	77,39
Ethylbenzene	91	106
2-Hexanone	43	58,85,100,57
Isopropylbenzene	105	120
p-Isopropyltoluene	119	134,91
Methylene chloride	84	86,49,51
4-Methyl-2-penatone	43	58,85,100
n-Propylbenzene	91	120
Styrene	104	78,103
1,1,1,2-Tetrachloroethane	131	133,119
1,1,2,2-Tetrachloroethane	83	131,85,133,166
Tetrachloroethene	166	168,129,131,164
Toluene	92	91
1,1,1-Trichloroethane	97	99,61,117,119
1,1,2-Trichloroethane	83	97,85,99,132,134
Trichloroethene	95	130,132,97
Trichlorofluoromethane	101	103
1,2,3-Trichloropropane	75	77
1,2,4-Trimethylbenzene	105	120
1,3,5-Trimethylbenzene	105	120
Vinyl chloride	62	64
o-Xylene	106	91
m,p-Xylene	106	91
INTERNAL STANDARDS/SURROGATES		
Pentafluorobenzene	168	
1,4-Difluorobenzene	114	63,88
Chlorobenzene-d_5	117	82,119
1,4-Dichlorobenzene	152	
4-Bromofluorobenzene	95	174,176
Toluene-d_8	98	70,100
1,2-Dichloroethane-d_4	65	102

TABLE III. VOLATILE INTERNAL STANDARDS WITH CORRESPONDING ANALYTES ASSIGNED FOR QUANTITATION

Pentafluorobenzene

Acetone
Acrolein
Acrylonitrile
Benzene
Bromochloromethane
Bromomethane
2-Butanone
Carbon disulfide
Carbon tetrachloride
Chloroethane
Chloroform
Chloromethane
Dichlorodifluoromethane
1,2-Dichloroethane
1,1-Dichloroethane
1,1-Dichloroethene
1,2-Dichloroethane-d_4 [a]
cis-1,2-Dichloroethene
trans-1,2-Dichloroethene
2,2-Dichloropropane
1,1-Dichloropropene
Iodomethane
Methylene chloride
1,1,1-Trichloroethane
Trichlorofluoromethane
Trichlorotrifluorethane
Vinyl acetate
Vinyl chloride

1,4-Difluorobenzene

Bromodichloromethane
2-Chloroethyl vinyl ether
1,2-Dibromoethane
Dibromomethane
trans-1,3-Dichloropropene
Toluene-d_8 [a]
Trichloroethene

Chlorobenzene

Bromoform
Chlorodibromomethane
Chlorobenzene
1,2-Dibromoethane
1,3-Dichloropropane
cis-1,3-Dichloropropene
Ethylbenzene
2-Hexanone
4-Methyl-2-pentanone
Styrene
Toluene
1,1,2-Trichloroethane
1,1,1,2-Tetrachloroethane
o,m,p-Xylenes

1,4-Dichlorobenzene-d_4

Bromobenzene
n-Butylbenzene
sec-Butylbenzene
tert-Butylbenzene
2-Chlorotoluene
4-Chlorotoluene
1,2-Dibromo-3-chloropropane
1,2-Dichlorobenzene
1,3-Dichlorobenzene

TABLE III. (cont)

1,4-Dichlorobenzene-d_4 (cont)

1,4-Dichlorobenzene
n-Propylbenzene
1,1,2,2-Tetrachloroethane
1,2,3-Trichloropropane
1,2,4-Trimethylbenzene
1,3,5-Trimethylbenzene
4-Bromofluorobenzene [a]

[a] Surrogate

TABLE IV. STOCK AND WORKING CALIBRATION SOLUTIONS

Chemical name/concentration	Final concentration Stock (μg/mL)	Working std. (μg/mL)
INTERNAL STANDARD MIX		
Pentafluorobenzene (1000 μg/mL)	50	25
Chlorobenzene-d_5 (1000 μg/mL)	50	25
1,4-Difluorobenzene (1000 μg/mL)	50	25
1,4-Dichlorobenzene-d4 (1000 μg/mL)	50	25
CALIBRATION STANDARD MIX		
HSL Custom standard		
Acetone (1000 μg/mL)	100	25
Methyl ethyl ketone (1000 μg/mL)	100	25
Carbon disulfide (1000 μg/mL)	100	25
4-Methyl-2-Pentanone (1000 μg/mL)	100	25
Vinyl acetate (1000 μg/mL)	100	25
2-Chloroethyl vinyl ether (1000 μg/mL)	100	25
2-Hexanone (1000 μg/mL)	100	25
Acrolein (1000 μg/mL)	100	25
Acrylonitrile (1000 μg/mL)	100	25
Iodomethane (1000 μg/mL)	100	25
Freon 113 (1000 μg/mL)	100	25
Purgeable Surrogate Standard Mix - CLP		
Bromofluorobenzene (250 μg/mL)	50	25
1,2-Dichloroethane-d_4 (250 μg/mL)	50	25
Toluene-d_8 (250 μg/mL)	50	25

TABLE IV. (cont)

Chemical name/concentration	Final concentration Stock (μg/mL)	Working std. (μg/mL)
Volatile Organic Compounds Mix #1		
sec-Butylbenzene (2000 μg/mL)	100	25
tert-Butylbenzene (2000 μg/mL)	100	25
Chlorobenzene (2000 μg/mL)	100	25
2-Chlorotoluene (2000 μg/mL)	100	25
4-Chlorotoluene (2000 μg/mL)	100	25
1,2-Dichlorobenzene (2000 μg/mL)	100	25
1,3-Dichlorobenzene (2000 μg/mL)	100	25
1,4-Dichlorobenzene (2000 μg/mL)	100	25
Isopropylbenzene (2000 μg/mL)	100	25
n-Propylbenzene (2000 μg/mL)	100	25
o-Xylene (2000 μg/mL)	100	25
p-Xylene (2000 μg/mL)	100	25
Volatile Organic Compounds Mix #2		
Benzene (2000 μg/mL)	100	25
Bromobenzene (2000 μg/mL)	100	25
n-Butylbenzene (2000 μg/mL)	100	25
Ethylbenzene (2000 μg/mL)	100	25
p-Isopropyltoluene (2000 μg/mL)	100	25
Naphthalene (2000 μg/mL)	100	25
Styrene (2000 μg/mL)	100	25
Toluene (2000 μg/mL)	100	25
1,2,3-Trichlorobenzene (2000 μg/mL)	100	25
1,2,4-Trichlorobenzene (2000 μg/mL)	100	25

TABLE IV. (cont)

Chemical name/concentration	Final concentration Stock (μg/mL)	Working std. (μg/mL)
Volatile Organic Compounds Mix #2 (cont)		
1,2,4-Trimethylbenzene (2000 μg/mL)	100	25
1,3,5-Trimethylbenzene (2000 μg/mL)	100	25
m-Xylene (2000 μg/mL)	100	25
Volatile Organic Compounds Mix #3		
1,2-Dibromo-3-chloropropane (2000 μg/mL)	100	25
1,2-Dibromoethane (2000 μg/mL)	100	25
1,2-Dichloroethane (2000 μg/mL)	100	25
1,2-Dichloropropane (2000 μg/mL)	100	25
1,3-Dichloropropane (2000 μg/mL)	100	25
1,1-Dichloropropene (2000 μg/mL)	100	25
1,3-Dichloropropene (4000 μg/mL) *	400	50
Hexachlorobutadiene (2000 μg/mL)	100	25
1,1,1,2-Tetrachloroethane (2000 μg/mL)	100	25
1,1,2,2-Tetrachloroethane (2000 μg/mL)	100	25
1,1,2-Trichloroethane (2000 μg/mL)	100	25
Trichloroethene (2000 μg/mL)	100	25
1,2,3-Trichloropropane (2000 μg/mL)	100	25

* Mixture of cis-1,3-dichloropropene and trans-1,3-dichloropropene, 2000 μg/mL each.

Volatile Organic Compounds Mix #4		
Bromochloromethane (2000 μg/mL)	100	25
Bromoform (2000 μg/mL)	100	25
Carbon tetrachlororide (2000 μg/mL)	100	25
Chloroform (2000 μg/mL)	100	25

TABLE IV. (cont)

Chemical name/concentration	Final concentration Stock (μg/mL)	Working std. (μg/mL)
Volatile Organic Compounds #4 (cont)		
Dibromomethane (2000 μg/mL)	100	25
1,1-Dichloroethane (2000 μg/mL)	100	25
2,2-Dichloropropane (2000 μg/mL)	100	25
Tetrachloroethene (2000 μg/mL)	100	25
1,1,1-Trichloroethane (2000 μg/mL)	100	25
Volatile Organic Compounds Mix #5		
Bromodichloromethane (2000 μg/mL)	100	25
Dibromochloromethane (2000 μg/mL)	100	25
1,1-Dichloroethene (2000 μg/mL)	100	25
cis-1,2-Dichloroethene (2000 μg/mL)	100	25
trans-1,2-Dichloroethene (2000 μg/mL)	100	25
Methylene chloride (2000 μg/mL)	100	25
VOC #6 CALIBRATION STANDARD MIX		
Volatile Organic Compounds Mix #6		
Bromomethane (2000 μg/mL)	100	25
Chloromethane (2000 μg/mL)	100	25
Chloroethane (2000 μg/mL)	100	25
Dichlorodifluoromethane (2000 μg/mL)	100	25
Trichlorofluoromethane (2000 μg/mL)	100	25
Vinyl chloride (2000 μg/mL)	100	25

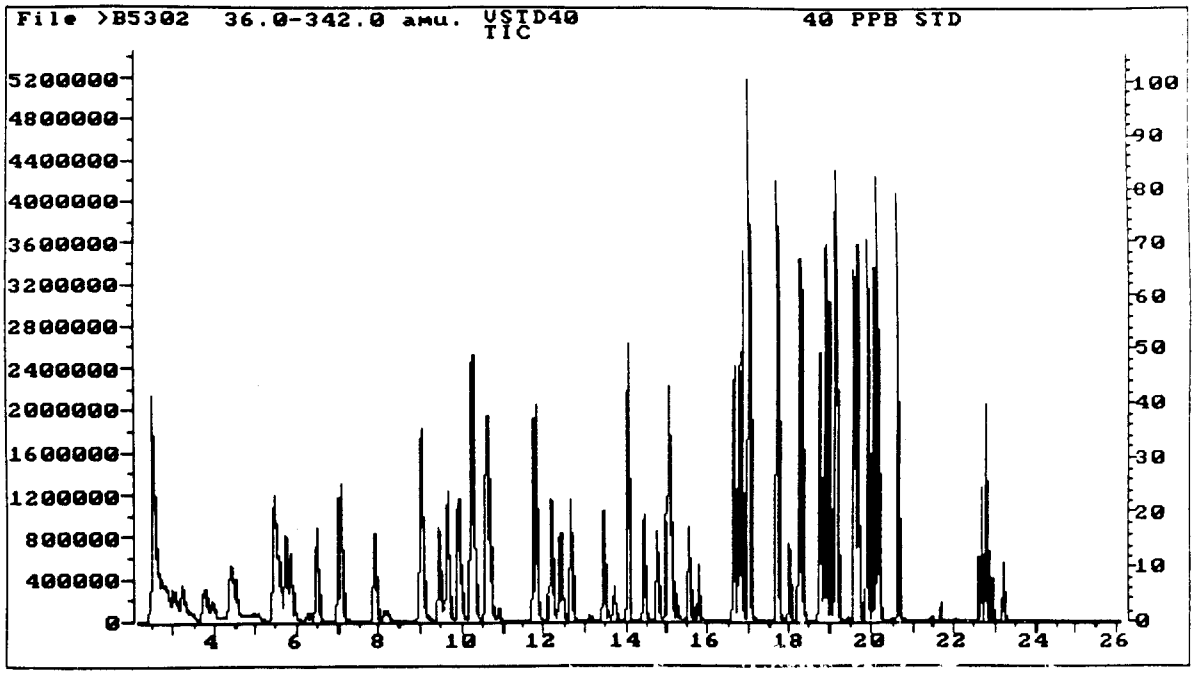

Fig. 1. Sample Chromatogram

GROSS ALPHA AND BETA ACTIVITY IN ENVIRONMENTAL MATRICES — GAS-FLOW PROPORTIONAL COUNTING

Analyte: Alpha- and beta-emitting nuclides	**Method No.:** ER100
Matrix: Soil, water, and air particulates	**Minimum Detectable Activity:** Soil, water ~1.2 pCi (alpha, beta) Filters 0.3 pCi (alpha) Filters 0.6 pCi (beta)
Procedure: Gas-flow proportional counting	**Accuracy and Precision:** Filters 94% ± 5% Water 105% ± 11%
Effective Date: 01/01/75	**Authors:** Richard J. Peters George H. Brooks

SAFETY NOTE: Before beginning this procedure, read all of the Material Safety Data Sheets for the chemicals listed in Sec. 7. Read Sec. 4.3 of the EM-9 Safety Manual for information on personal protective clothing and equipment.

1. Principle of Method

1.1. Samples are mounted on stainless steel planchets following leaching of soil samples and evaporation of water samples.

1.2. Samples are counted for 100 min on a low-background, gas-flow proportional counter.

2. Sensitivity

2.1. Sensitivity will vary greatly for alpha activity and to a lesser degree for beta activity due to self-absorption by the residual sample mass.

2.2. The minimum detection limit for both alpha and beta is approximately 3 pCi total activity for a representative soil or water having 0.1 g of residue.

2.3. For a representative air filter, the minimum detection limit is 0.5 pCi total alpha activity and 1 pCi total beta activity.

3. Accuracy and Precision

3.1. The efficiency and crosstalk between alpha and beta counts in a gas-flow proportional counter may vary greatly depending on the energy of the alpha or beta emitter. Plutonium-239 and $^{90}Sr/^{90}Y$ are used as the basis for all crosstalk and relative efficiency determinations. The accuracy of a given measurement will depend on the actual energies of the unknown nuclides.

3.2. The following accuracy and precision measurements were made in 1988 on air filter and water proficiency samples provided by the Environmental Monitoring Systems Laboratory-Las Vegas quality assurance program.

	Filter Samples	Water Samples
alpha	93% ± 6%	107% ± 13%
beta	94% ± 4%	103% ± 10%

4. Interferences

4.1. The crosstalk correction method may not adequately protect from incorrect identification of radiation from samples containing very low-energy alpha or high-energy beta activities.

4.2. Moderate to high levels of gamma radiation can be misinterpreted as alpha or beta activity by gas-flow proportional counters.

4.3. The addition of a thin mylar sheet covering the planchet results in increased self-absorption in samples containing low-energy alpha and beta activities and may result in an underestimation of the actual concentrations.

5. Collection and Storage of Samples

5.1. There are no special collection and storage requirements.

6. Apparatus

6.1. Low-background alpha/beta proportional counter: equipped with a 2.25-in. ultrathin counting window (80 $\mu g/cm^2$) and a 50-sample automatic changing capability. Tennelec Model No. LB-5100, Tennelec Inc., Oak Ridge, Tennessee.

6.2. P-10 (argon/methane) gas cylinder.

6.3. Planchets: stainless steel, 2.0- by 0.25-in., Atomic Products Corp., Center Moriches, NY.

6.4. Mylar sheet: 0.00025-in. thick.

6.5. Beakers: 50-, 600-, and 1000-mL, pyrex.

6.6. Tubes: 40- and 50-mL, centrifuge.

6.7. Heat lamp.

7. Reagents

7.1. Nitric acid (concentrated, reagent-grade).

7.2. Hydrofluoric acid (concentrated, reagent-grade).

7.3. Hydrochloric acid (concentrated, reagent-grade).

7.4. Hydrogen peroxide (30%, reagent-grade).

7.5. Nitric acid (7.2 M). Dilute 460 mL of concentrated HNO_3 to 1000 mL with distilled water.

8. Calibration and Standards

8.1. Generate detector efficiencies for the determination of alpha and beta activities from curves that plot the absolute detector efficiency as a function of the sample mass residue.

8.1.1. Use National Institute of Standards and Technology (NIST) standards 5516 and 4919-D.

8.1.2. Prepare a group of 10 standards with the same amount of spike and vary the amount of residue (0.05 - 1.50 g) to generate the curve.

8.1.3. Plot efficiency as a function of the sample mass residue.

8.1.4. Derive an equation to describe the curves for both alpha and beta energies. Efficiencies can then be interpolated from these curves for a sample of any mass.

8.2. Count plated ^{239}Pu and $^{90}Sr/^{90}Y$ standards for 10 min with each set of samples. Use the data to determine two factors for gas-flow proportional counting: 1) the alpha/beta and beta/alpha crosstalk and 2) the system's relative performance based on the derived efficiencies.

8.3. Count two mylar-covered empty planchets along with the sample set for 100 min to determine alpha and beta backgrounds.

9. Procedure

9.1. Air filters.

9.1.1. Directly mount air filters, without chemical processing, face up on planchets.

9.2. Soils.

9.2.1. Place 2 g of dried soil into a 50-mL beaker.

9.2.2. Add 10 mL of concentrated HNO_3 and 5-10 drops of concentrated HCl to the beaker. Swirl carefully and allow to leach overnight at room temperature.

9.2.3. Heat the sample until the yellow-orange NO_2 fumes no longer appear.

9.2.4. Transfer the sample to a 40-mL glass centrifuge tube. Rinse the beaker with 5 to 10 mL of 7.2 M HNO_3 and add the rinse to the centrifuge tube. Centrifuge for 5 min.

9.2.5. Write the sample number on the bottom of a planchet and weigh to the nearest mg. Record the sample number and planchet weight in a Laboratory notebook.

9.2.6. Carefully decant the acid mixture from the centrifuge tube to the preweighed planchet.

9.2.7. Rinse the centrifuge tube with approximately 5 mL of 7.2 M HNO_3 and decant the wash to the planchet.

9.2.8. Evaporate the solution on the planchet to dryness under a heat lamp. Control the heating rate so that the sample does not spatter.

9.2.9. Allow the planchet to cool, reweigh, and record the weight.

9.2.10. Cover the sample tightly with mylar film.

9.3. Sewage or sludge.

9.3.1. Weigh a 600-mL glass beaker and record the weight in a Laboratory notebook.

9.3.2. Pour approximately 100 mL of sample into the beaker, reweigh, and record the weight.

Wet weight = (beaker + sample) - beaker

9.3.3. Evaporate the sample to dryness. Reweigh and record the weight.

Dry weight = (beaker + sample) - beaker

9.3.4. Heat the sample on a hot plate and treat with concentrated HNO_3 and H_2O_2 until all organic material has been oxidized.

NOTE: The sample will not have a black tarry consistency, but may still have a grayish or reddish appearance.

9.3.5. Add approximately 20 mL of concentrated HNO_3 and 10 mL of HCl and boil until all HCl has been driven off (the NO_2 fumes will no longer appear).

9.3.6. Continue to heat until approximately 3 mL of solution remains.

9.3.7. Add 10-15 mL of 7.2 M HNO_3 to the sample.

9.3.8. Pour the sample into a 50-mL glass centrifuge tube. Rinse the beaker with 3-5 mL of 7.2 M HNO_3 and add the rinse to the centrifuge tube. Centrifuge for 5 min.

9.3.9. Proceed with Steps 9.2.5 through 9.2.10.

9.4. Water.

9.4.1. Place 900 mL of water and 5 mL of concentrated HNO_3 into a 1-L glass beaker. Evaporate the solution to dryness overnight on a hot plate, medium setting.

9.4.2. Dissolve the residue in approximately 10 mL of concentrated HNO_3. Wash down the sides of the beaker with HNO_3 and 6 drops of HF.

CAUTION: HF is extremely corrosive.

The amount of HNO_3 used is not as critical, but the sides of the beaker must be washed down thoroughly.

9.4.3. Boil the sample to dryness to volatilize any silica.

9.4.4. Dissolve the residue in approximately 10 mL of concentrated HNO_3 and treat the solution with 30% H_2O_2 until all organic material is destroyed

and the sample residue is white or pale yellow and dry. Carefully add H_2O_2 to avoid sample spatter. Usually 1-2 mL of H_2O_2 are required.

9.4.5. Add 10-15 mL of concentrated HNO_3 and 5-10 mL of HCl to the sample. Heat until the evolution of NO_2 ceases and the sample is clear or pale yellow. Continue heating until 2-3 mL remain.

NOTE: Do not let the sample go to dryness.

9.4.6. Dissolve the residue in approximately 10 mL of 7.2 M HNO_3, washing down the sides of the beaker.

9.4.7. Proceed with Steps 9.2.5 through 9.2.10.

9.5. Loading the proportional counter.

9.5.1. Place the plated standards above program indicator A in the sample holding rack.

9.5.2. Place the quality assurance samples above program indicator B, along with the two blank planchets.

9.5.3. Place the samples into planchet holders and record their position on the alpha-beta sample sheet (Fig. 1), using program indicator C for the sample set.

9.5.4. Place the aluminum block on top of the sample stack.

10. Operation of Instrument

10.1. Turn the key switch on the front panel of the LB-5100 proportional counter from **RUN** to **INITIALIZE**, then back to **RUN**. This initializes the microprocessor and queries the operator for the proper information concerning the sample set.

10.2. Check that detector gas flow is 0.15 square cubic feet per hour (SCFH) and that the high voltage is turned to the proper setting (1323 V).

NOTE: Flows higher than 0.25 SCFH can damage the counter.

10.3. Answer the questions pertinent to the sample set (Fig. 2) and the counter will automatically begin the counting sequence. Consult the count room manager if problems arise.

10.4. Refer to the operating manual (Source Material 12.1) for further information on instrument use.

10.5. When data collection is complete, staple all hard copy output (Fig. 3) to the alpha-beta sample sheet for use in data reduction.

11. Calculations

11.1. Use the following formulas to determine detector efficiencies for soil and water (these equation lines were generated from the absolute efficiency versus sample mass residue curves):

for residual mass (M) < 0.2, use

$$Ea = 0.085 \times e^{-4.9 \times M}$$
$$Eb = 0.36 \times e^{-1.5 \times M} \quad ;$$

for residual mass (M) > 0.2, use

$$Ea = (0.08 \times e^{-5.0 \times M}) + 0.01$$
$$Eb = (-0.0695 \times M) + 0.268 \quad ;$$

where Ea = alpha efficiency,
Eb = beta efficiency, and
M = residual mass (g).

11.2. Use the following efficiency factors for air filter samples.

Ea = 0.25
Eb = 0.44

Since sample mass residue is assumed to be constant, the efficiency values shown are a result of standard efficiency calculations (cpm/dpm) using a NIST standard.

11.3. Alpha activities are calculated using the following equation:

$$Aia = \frac{Ac - Ab - Ax}{Ea \times Q \times 2.22} \quad ,$$

where Aia = alpha activity (pCi),
Ac = alpha activity from the LB-5100 output (cpm),
Ab = alpha background (cpm),
Ax = crosstalk (see below for calculation),

Ea = alpha efficiency,
Q = sample quantity (g or L), and
2.22 = factor to convert dpm to pCi.

Ax is derived using the following equation:

$$Ax = Xba \times \left(\frac{Bt}{T} - Bb\right) ,$$

where Ax = crosstalk,
Xba = beta to alpha crosstalk,
Bt = total beta counts,
T = time of count (min), and
Bb = beta background (cpm).

11.4. Beta activities are calculated using the following equation:

$$Aib = \frac{(Bc - Bb - Bx)}{Eb \times Q \times 2.22} ,$$

where Aib = beta activity (pCi),
Bc = beta activity from the LB-5100 output (cpm),
Bb = beta background (cpm),
Bx = crosstalk (see below for calculation),
Eb = beta efficiency,
Q = sample quantity (g or L), and
2.22 = factor to convert dpm to pCi.

Bx is derived using the following equation:

$$Bx = Xba \times \left(\frac{At}{T} - Ab\right) ,$$

where Bx = crosstalk,
Xba = alpha to beta crosstalk,
At = total alpha counts,
T = time of count (min), and
Ab = alpha background (cpm).

11.5. Uncertainties are generated using the following formula:

$$Sax = |Aia| \sqrt{((T_1/T_2) + T_3)\ (T_3 + SQUAN)\ (SQUAN)}\ ,$$

where Sax = standard deviation of the alpha activity,
Aia = alpha activity (pCi),
T1 = (Ac + Ab + Ax) T (where Ac, Ab, Ax, and T are defined as in Step 11.3).
T2 = Ac - Ab - Ax (where Ac, Ab, and Ax are defined as in Step 11.3).
T3 = Ast/Ea (where Ast equals the standard deviation of Ea, the alpha efficiency), and
SQUAN = standard deviation of the sample quantity.

For the calculation of beta uncertainties, replace alpha factors with beta factors in the above expression.

12. Source Materials

12.1. Instruction Manual for LB-5100, Rev. 4.2, Tennelec, Inc., Oak Ridge, Tennessee (1978).

12.2. Environmental Protection Agency, "Tentative Reference Method for the Measurement of Gross Alpha and Gross Beta Radioactivities in Environmental Waters," Quality Assurance Branch, Technical Support Laboratory, National Environmental Research Center, Las Vegas, Nevada, ROAP Number 22 ACW, EPA-680/4-75-005 (1975).

12.3. *EML Procedures Manual*, 26th ed., H. L. Volchok and G. de Planque, Eds. (Environmental Measurements Laboratory, US Department of Energy, New York, New York, HASL-300, 1986).

Revision or additions to the procedure are marked (▒▒▒▒). Where a section heading is marked, the entire section has been revised.

ALPHA-BETA COUNTING SEQUENCE

COUNT STARTED: _____ SAMPLE TYPE: _____ COUNT LENGTH (min): _____

SAMP. NO.	REQUEST NUMBER	OWN	VOL/MASS QUANT.	UNITS	SAMP. NO.	REQUEST NUMBER	OWN	VOL/MASS QUANT.	UNITS
1					20				
2					21				
3					22				
4					23				
5					24				
6					25				
7					26				
8					27				
9					28				
10					29				
11					30				
12					31				
13					32				
14					33				
15					34				
16					35				
17					36				
18					37				
19					38				

Fig. 1. Alpha-beta sample sheet.

TENNELEC LB5100 REV. 4.0 - POWER ON
MODE
1-SINGLE SAMPLE
2-SINGLE CYCLE
3-SINGLE CYCLE AND RESTACK
4-MULTI-CYCLE
WHICH MODE DO YOU WANT (1,2,3,4)? 3 (3 = Single Cycle and Restack).

DO YOU WANT TO AVERAGE (Y/N)? N (Y will average 2 or more counts).

GROUP A (Group "A" is first group in initialization).

PLEASE ENTER SAMPLE ID (UP TO
12 CHARACTERS) AIR SAMPLE

ENTER TIME PS(XXXXX.XX MIN) 100	Requests Time Preset in hundreths of min. User enters a Time Preset of 1.00 min (max = 99,999.9).
ENTER A PS (CNTS) 999999	Requests Channel A Preset in Counts. User enters 999,999 (max = 9,999,999).
ENTER B PS(CNTS) 0	Requests Channel B Preset in Counts. User enters 0 which means system will not preset on B counts (max = 9,999,999).
ENTER BKG A(XXXXX.XX CPM) 14	Requests alpha bkg cpm be subtracted from gross alpha cpm. User input represents 0.14 cpm bkg subtract (default "0" indicates no subtract).
ENTER BKG B(XXXXX.XX CPM) 95X 94	Requests beta bkg cpm be subtracted from gross beta cpm. User enters wrong value, abort by entering "X" after value. User inputs 0.94 cpm bkg subtract.
ENTER Ka(XXXX.XXX) 333	Requests denominator for A/Ka column. User enters .333 (max = 9,999.999).
ENTER Kb(XXXX.XXX) 550	Requests denominator for B/Kb column. User enters .550 (max = 9,999.999).
ARE ALL THE GROUP INPUTS CORRECT (Y/N)? Y	If "N", the program again asks the user for the correct information.
DO YOU WANT TO DEFINE ANOTHER GROUP (Y/N)? N	If "Y", the program asks for the new group and the above question/answer format is repeated.

When the above question is answered N, the system will print a summary of the groups' parameters, as shown below.

#	IDENTIFICATION	TIME	PST A	PST B	BKG A	BKG B	Ka	Kb
A	AIR SAMPLE	1.00	999999	0	0.14	0.94	0.333	0.550
B		0.00	0	0	0.00	0.00	0.000	0.000
C		0.00	0	0	0.00	0.00	0.000	0.000

Fig. 2. Tennelec LB-5100 user interface session.

```
# IDENTIFICATION    TIME    PST A    PST B    BKG A     BKG B       KA          KB
A STD/S            10.00        0        0     0.00      0.00    0.000       0.000
B OA/S + SAMPL    100.00        0        0     0.00      0.00    0.000       0.000
C                   0.00        0        0     0.00      0.00    0.000       0.000
D                   0.00        0        0     0.00      0.00    0.000       0.000
E                   0.00        0        0     0.00      0.00    0.000       0.000


TUE MAR  6,1990
GROUP A  STD/S
SN    TIME COUNTS A COUNTS B    CPM A      CPM B  A/0000.000 B/0000.000    2sig A
B  HR:MIN:SEC

 1  10.00      881        85     88.10       8.50                          6.73%
%   08:48:04
 2  10.00       10     45125      1.00    4512.50                         63.24%
%   08:58:17


TUE MAR  6,1990
GROUP B  OA/S + SAMPL
SN    TIME COUNTS A COUNTS B    CPM A      CPM B  A/0000.000 B/0000.000    2sig A
B  HR:MIN:SEC

 3 100.00       39       195      0.39       1.95                         32.02%
%   10:38:41
 4 100.00      144       824      1.44       8.24                         16.66%
%   12:18:57
 5 100.00      156       798      1.56       7.98                         16.01%
%   13:59:12
 6 100.00      140       800      1.40       8.00                         16.90%
%   15:39:28
 7 100.00       77       967      0.77       9.67                         22.79%
%   17:19:43
 8 100.00       18       424      0.18       4.24                         47.14%
%   18:59:59
 9 100.00       41       305      0.41       3.05                         31.23%
%   20:40:14
10 100.00       19       374      0.19       3.74                         45.88%
%   22:20:30
11 100.00       18       779      0.18       7.79                         47.14%
%   00:00:45

# IDENTIFICATION    TIME    PST A    PST B    BKG A     BKG B       KA          KB
A STD/S            10.00        0        0     0.00      0.00    0.000       0.000
B OA/S + SAMPL    100.00        0        0     0.00      0.00    0.000       0.000
C                   0.00        0        0     0.00      0.00    0.000       0.000
D                   0.00        0        0     0.00      0.00    0.000       0.000
E                   0.00        0        0     0.00      0.00    0.000       0.000
```

Fig. 3. Tennelec LB-5100 data output sheet.

AMERICIUM-241 IN ENVIRONMENTAL MATRICES (GREATER THAN 2-GRAM SAMPLES) — ALPHA SPECTROMETRY

Analyte: Americium-241	**Method No.:** ER110
Matrix: Soil and biologicals	**Minimum Detectable Activity:** 0.02 pCi/sample
Procedure: Radiochemistry and alpha spectrometry	**Accuracy and Precision:** 109% ± 28%
Effective Date: 09/01/76	**Authors:** Daryl Knab Richard J. Peters Wanita Eberhart

SAFETY NOTE: Before beginning this procedure, read all of the Material Safety Data Sheets for the chemicals listed in Sec. 7. Read Sec. 4.3 of the EM-9 Safety Manual for information on personal protective clothing and equipment. Read Sec. 12 of this procedure and Source Materials 13.10 to 13.13 for proper waste disposal practices.

1. Principle of Method

1.1. Gamma-ray spectrometry in Method No. ER130 is used to screen samples for 59.5-keV ^{241}Am activity. Quantitative data are reported for samples above the instrumental detection limit. Samples below the detection limit are subjected to chemical separation and alpha spectrometry.

1.2. For alpha spectrometry, americium is extracted from dissolved soil by HDEHP • P_2O_5 into dodecane from 6 M HCl. It is separated from most actinides and lanthanides by anion exchange with an alcohol-nitric acid solution and the americium is collected by coprecipitation on NdF_3 for counting.

1.3. All samples are traced with ^{243}Am prior to wet ashing.

2. Sensitivity

2.1. Sensitivity is limited by the counter background.

2.2. For routine measurements with an 80,000-s counting period and a counting efficiency of 25%, the minimum detection limit (the 95th percentile of the background distribution) is 0.02 pCi per sample. Typical sample aliquots are 10 g.

3. Accuracy and Precision

3.1. Recovery of ^{243}Am tracer is highly variable (10% to 80%) with an average of approximately 55% for soils and biological samples.

3.2. The National Institute of Standards and Technology and the DOE Environmental Measurements Laboratory (EML) produce and distribute certified materials for americium analysis in several matrices. We prepare in-house materials by pipetting known amounts of americium standards onto blank environmental matrices. Results on 1985 EML-Quality Assessment Program samples are indicative of our accuracy and precision (the mean ± 1 standard deviation obtained from the following table is 109% ± 28%).

	May		November	
Matrix	EM-9	EML	EM-9	EML
Tissue (fCi/g)	4 ± 1	5 ± 1	367 ± 22	370 ± 7
Vegetation (fCi/g)	—	—	360 ± 60	320 ± 10
Silicates (fCi/g)	3.7 ± 0.8	2.4 ± 0.2	215 ± 37	220 ± 20

4. Interferences

4.1. Mass loading of the filtered samples in excess of 100 μg interferes with alpha spectroscopy resolution.

4.2. Thorium-228, ^{224}Ra, ^{222}Rn, and ^{238}Pu interfere with ^{241}Am alpha spectroscopy determinations.

5. Collection and Storage of Samples

5.1. There are no special collection and storage requirements for dry solid environmental matrices.

6. Apparatus

6.1. Funnels: 250-mL, separatory.

6.2. Graduated cylinder: 2-L.

6.3. Beakers: 100- and 200-mL, tall form, new.

6.4. Beakers: 600-mL, Teflon.

6.5. Squeeze bottle: 500-mL, polyethylene.

6.6. Centrifuge tubes: 50-mL, polypropylene.

6.7. Centrifuge.

6.8. Ion-exchange columns: 197-mm-long by 7-mm-i.d., with a 100-mL top reservoir and a tip tapered to 2 mm i.d.

6.9. Filter apparatus: 25-mm membrane.

6.10. Filter paper: Whatman No. 42 and Whatman GF/A glass fiber.

6.11. Screen: stainless steel, for 25-mm filter No. 79791, Gelman.

6.12. Disks: 1-in.-diam, stainless-steel.

6.13. Filters: 25-mm Millipore, 0.05-μm pore size.

6.14. Anaslide filter holder.

6.15. Pipettes: 50- and 250-μL with disposable tips.

6.16. Bottles: 500-mL, polyethylene.

6.17. Tubes: 50-mL, plastic, centrifuge.

6.18. Stirring bar: 1.5-in., Teflon-coated.

6.19. Hot plate: magnetic stirring, Corning Model PC-351.

6.20. Alpha spectrometer: equipped with a 1024-channel analyzer using 300-mm^2 silicon-surface barrier detectors.

7. Reagents

7.1. HDEHP (0.015 M). Add 7.5 g of P_2O_5 to 50 g of bis(2-ethylhexyl) hydrogen phosphate. Mix for 1 h. Dilute with 2 kg of dodecane and let stand overnight.

7.2. $(NH_4)_2CO_3$ • 10% NH_4OH. Saturate a 10% solution of ammonium hydroxide with ammonium carbonate.

7.3. 3 M HCl • 3 M HF. Dilute 250 mL of concentrated HCl and 100 mL of concentrated HF with distilled water to a final volume of 1000 mL.

7.4. Yttrium carrier (5 mg/mL). Dissolve 8.3 g of Y_2O_3 in 10 mL of 8 M HNO_3 and dilute to a total volume of 1000 mL with distilled water.

7.5. 1 M HCl • 1 M HF. Dilute 80 mL of concentrated HCl and 35 mL of concentrated HF with distilled water to a final volume of 1000 mL.

7.6. Boric acid (saturated). Add enough H_3BO_3 crystals (approximately 6 g at room temperature) to 100 mL of distilled water so that some of the crystals do not dissolve.

7.7. Nitric acid (concentrated 69%, reagent-grade).

7.8. Hydrochloric acid (concentrated, reagent-grade).

7.9. Perchloric acid (concentrated, reagent-grade).

7.10. Hydrofluoric acid (concentrated 48%, reagent-grade).

7.11. Hydrochloric acid (6 M). Dilute 500 mL of concentrated HCl with distilled water to a final volume of 1000 mL.

7.12. NH_2OH • HCl. Fill a 1-lb bottle of NH_2OH • HCl with distilled water.

7.13. Ethyl acetate.

7.14. 60% ethanol • 40% 6 M HNO_3. Add 900 mL of ethanol to 600 mL of 6 M HNO_3. Prepare fresh before each use.

7.15. 75% methanol • 25% 6 M HNO_3. Add 1800 mL of methanol to 600 mL of 6 M HNO_3.

7.16. 60% methanol • 40% 6 M HNO_3. Add 1440 mL of methanol to 960 mL of 6 M HNO_3.

7.17. 60% methanol • 40% 2.5 M HNO_3. Add 1440 mL of methanol to 960 mL of 2.5 M HNO_3.

7.18. Nitric acid (6 M). Dilute 375 mL of concentrated HNO_3 to 1000 mL with distilled water.

7.19. Nitric acid (2.5 M). Dilute 156 mL of concentrated HNO_3 to 1000 mL with distilled water.

7.20. Nitric acid (1 M). Dilute 63 mL of concentrated HNO_3 to 1000 mL with distilled water.

7.21. Ethanol saturated with sodium nitrite.

7.22. Resin (MP-1, 100-200 mesh).

7.22.1. Transfer 1 lb of resin to a 2-L graduated cylinder with 6 M HNO_3. Let the resin settle and decant the liquid.

7.22.2. Add deionized water to a volume of 2 L. Mix thoroughly and allow to settle. Decant the liquid.

7.22.3. Repeat the water washes until the pH of the solution is greater than 2.

7.23. 1 M HNO_3 • 1 M HF. Dilute 62 mL of concentrated HNO_3 and 36 mL of concentrated HF to 1000 mL with water.

7.24. Isopropyl alcohol.

7.25. Neodymium (1 mg/mL). Dissolve 1.17 g of Nd_2O_3 in a minimum amount of hot 6 M HNO_3. Dilute to 1000 mL with deionized water.

7.26. Americium-243 tracer solution (99.98% isotopic purity). Dilute to 10 dpm/mL. Lawrence Livermore Laboratory, Radiochemistry Division.

8. Calibration and Standards

8.1. All samples are traced with calibrated ^{243}Am tracer solution that has been standardized by electrodeposition and gross alpha counting. The value is checked yearly.

8.2. Calibration of the alpha spectrometer.

8.2.1. The alpha secondary standard (No. 5) contains the isotopes ^{238}Pu, ^{239}Pu, and ^{242}Pu and is standardized in a gas-flow proportional counter using the National Bureau of Standards (NBS) Standard Reference Material (SRM) 4906-B17, the ^{238}Pu primary standard.

8.2.2. Calibration counts are made for 1020 s. The efficiency of each detector is determined by integrating the counts in 20 channels (13 channels to the left of the peak and 6 channels to the right of the peak) of the energy spectrum of each of the three isotopes.

8.2.3. Background counts are accumulated for each energy spectrum for each detector for 60,000 s.

9. Procedure

9.1. Sample preparation.

9.1.1. Milling and sizing of samples is very critical to obtain representative samples. The following dissolution procedures are used if the samples are to be measured only for ^{241}Am. If plutonium isotopes are to be determined simultaneously, go to Step 9.1.1 of Method No. ER160 and return the solution from ER160, Step 9.2.6.2 to Step 9.1.2.13 below.

9.1.2. Soil dissolution.

9.1.2.1. Weigh a 10-g aliquot of dry soil into a 500-mL polyethylene bottle.

9.1.2.2. Add 1.0 mL of ^{243}Am tracer to the sample.

9.1.2.3. **Carefully** add approximately 200 mL of concentrated HNO_3. Carbonate soils can react vigorously. Add 200 mL of 48% HF.

CAUTION: HF is extremely hazardous. Wear rubber gloves, eye protection, and a lab coat. Completely clean up all spills and wash thoroughly after using HF. Make all HF transfers in an exhaust fume hood to avoid the toxic fumes.

9.1.2.4. Place a 1.5-in. Teflon-coated stirring bar in the bottle and cap loosely. The cap must be loose enough to permit generated gases (principally SiF_4 and nitrous oxides) to escape to prevent pressure buildup.

9.1.2.5. Place the bottle in a hot water bath on a magnetic stirring hot plate and stir the sample overnight with heating. Cover the bottle and beaker with plastic wrap to keep the water from evaporating from the water bath.

NOTE: A 1-L beaker on a Corning Model PC-351 hot plate set at "2" can be left unattended for 15 h (overnight).

9.1.2.6. Allow the mixture to settle for 10 min and decant into a 600-mL Teflon beaker.

9.1.2.7. A second leach with HF or HF • HNO_3 may be needed if large quartz crystals are present. Finely suspended material generally will be dissolved in the subsequent evaporation. Large amounts of certain mineral crystals, like magnetite, zircons, etc., may require special treatment.

9.1.2.8. Evaporate the mixture to dryness.

9.1.2.9. Add approximately 200 mL of concentrated HCl and 5 g of H_3BO_3 to the polyethylene bottle containing the soil residue. Cap the bottle and shake well. Loosen the cap slightly and let the mixture stand until the completion of Step 9.1.2.8.

9.1.2.10. Pour the $HCl \cdot H_3BO_3$ mixture into the Teflon beaker. Rinse the bottle with a little distilled water and add the water rinse to the Teflon beaker. Remove the stirring bar and discard the bottle.

9.1.2.11. Heat the mixture in the Teflon beaker until approximately 10 mL remains. Add 100 mL of concentrated HNO_3 and boil to remove the HCl.

9.1.2.12. **CAUTIOUSLY** add 30% H_2O_2 a few drops at a time from a squeeze bottle to oxidize any organic residues. Continue adding HNO_3 and H_2O_2 until the evaporated residue is light yellow and clear.

9.1.2.13. Evaporate the solution until the first salts appear.

9.1.2.14. Dissolve the residue in 20 mL of 6 M HCl. Add 1 g of H_3BO_3 and allow the solution to cool.

9.1.2.15. Cover the beaker with plastic wrap until ready for solvent extraction.

9.1.3. Vegetation dissolution.

9.1.3.1. Large samples are dried at approximately 60°C in tared glass beakers (up to 4 L) until a constant weight is obtained on successive days. Record the tare, gross, and dry weights.

9.1.3.2. Add 50 mL of distilled water to the beaker. Cover with perforated aluminum foil. Ash at 100-200°C for 8 h.

9.1.3.3. Ash at 300°C overnight.

9.1.3.4. Ash at 400°C for 8 h.

9.1.3.5. Ash at 500°C until the sample ash is white.

9.1.3.6. Cool and weigh the sample.

9.1.3.7. Repeat Steps 9.1.3.5 and 9.1.3.6 until a constant weight is achieved. Record the total ash weight.

NOTE: The entire ash sample is frequently transferred to a 500-mL polyethylene bottle for gamma-emitting radionuclide analysis using Ge(Li) gamma-ray spectroscopy.

9.1.3.8. Dissolve the entire sample (up to 10 g) in approximately 200 mL of HNO_3. Add 1 mL of ^{243}Am tracer solution before continuing with the dissolution.

9.1.3.9. Heat the sample on a hot plate and add 30% H_2O_2 in small amounts until the sample dries to a clear residue. The color may vary from pure white to deep lilac.

NOTE: Attention to the temperature is important, as samples can bump violently if too hot.

9.1.3.10. Dissolve the residue in a mixture of 50 mL of concentrated HNO_3 and 25 mL of concentrated HCl. Evaporate to approximately 25 mL to remove the HCl.

9.1.3.11. Remove the sample from the hot plate and cool. Dilute to 100 mL with 7.2 N HNO_3. Let the sample stand overnight.

9.1.3.12. Filter the sample using a Whatman No. 42 filter paper. Transfer all the residue onto the paper with water. Save the filtrate for Step 9.1.3.17.

9.1.3.13. Return the filter paper and residue to a 200-mL Teflon beaker. Add 100 mL of HF and 100 mL of HNO_3 to the beaker. Evaporate to dryness overnight on a hot plate set on low.

9.1.3.14. Dissolve the residue in 50 mL of HNO_3 and treat with 30% H_2O_2 as in Step 9.1.3.9.

9.1.3.15. Dissolve the residue in a mixture of 50 mL concentrated HNO_3 and 25 mL of concentrated HCl. Boil to a volume of approximately 25 mL to remove all HCl. Add 5 g of H_3BO_3.

9.1.3.16. Remove the sample from the hot plate and cool. Dilute to 100 mL with water.

9.1.3.17. Filter the sample through a Whatman GF/A glass-fiber filter into the beaker containing the filtrate from Step 9.1.3.12.

Wash the filter with water. Evaporate the solution until just dry.

9.1.3.18. Add 20 mL of 6 M HCl and cover the beaker with plastic wrap until ready for solvent extraction.

9.1.4. Tissue dissolution (including bone).

9.1.4.1. Weigh a 10-g aliquot of wet soft tissue or bone, excluding feathers and hide, into a 600-mL glass beaker.

9.1.4.2. Add 1 mL of ^{243}Am tracer.

9.1.4.3. Wet-ash the sample with concentrated HNO_3 and 30% H_2O_2 until a clear or light yellow solution is obtained.

NOTE: Do not use HF because insoluble CaF_2 precipitates are formed.

9.1.4.4. Evaporate the solution until just dry.

9.1.4.5. Add 20 mL of concentrated HCl and evaporate until just dry. Cool and add 20 mL of 6 M HCl. Cover the beaker with plastic wrap until ready for solvent extraction.

9.2. Solvent extraction.

9.2.1. Add approximately 10,000 cts of Nd-147 tracer to the sample.

9.2.2. Evaporate the solution to dryness on low heat using either the sample as dissolved above or the americium fraction from the plutonium anion-exchange column (see Step 9.2.6.1 of the plutonium procedure, Method No. ER160).

9.2.3. Add 20 mL of concentrated HCl to the dissolved sample residue, rinsing the sides of the beaker. Evaporate the sample to dryness.

9.2.4. Add 200 mL of concentrated HCl. Evaporate to 100 mL to convert the solution to 6 M HCl. Add additional 6 M HCl as necessary until dissolution is complete.

9.2.5. Cool the sample to room temperature.

9.2.6. Add 50 mL of 0.015 M HDEHP to the solution.

NOTE: Maintain an organic:aqueous ratio greater than 1:5.

9.2.7. Stir the sample for 10 min on a magnetic stirrer. Pour the mixture into a separatory funnel.

9.2.8. Allow the phases to separate for 10 min or until separation is complete.

9.2.9. Return the aqueous phase and interface to the beaker.

9.2.10. Add 50 mL of HDEHP to the aqueous phase and stir for 5 min.

9.2.11. Gently pour the mixture into the separatory funnel. Allow the phases to separate.

9.2.12. Drain the aqueous phase into the beaker. Retain the interface in the separatory funnel.

9.2.13. Add 100 mL of 6 M HCl to the organic phase in the separatory funnel.

NOTE: Maintain an organic:aqueous ratio of 1:1.

9.2.14. Mix for 1 min and let the phases separate.

9.2.15. Drain the acid wash into the beaker.

9.2.16. Dilute the organic phase 1:1 with 100 mL of ethyl acetate and allow to stand for at least 30 min.

9.2.17. Add 50 mL of saturated $(NH_4)_2CO_3 \cdot 10\%\ NH_4OH$ to the organic phase.

NOTE: Maintain an organic:aqueous ratio of 4:1.

9.2.18. Carefully release the gas pressure. Shake for 3 min. Allow the phases to separate.

9.2.19. Drain the aqueous phase into a 200-mL tall form beaker.

9.2.20. Add 50 mL of $(NH_4)_2CO_3 \cdot 10\%\ NH_4OH$ to the organic phase. Shake for 3 min. Allow the phases to separate overnight.

9.2.21. Shake for 2 min and allow the phases to separate.

9.2.22. Drain the aqueous phase and the interface into the beaker. Discard the organic phase into a plastic-coated glass bottle containing 200 mL H_2O, label organic waste. Seal the bottle with a stopper compatible with the solution that will release if pressure builds up in the container.

9.2.23. Place the beaker on a hot plate and evaporate the solution to dryness on low heat.

9.2.24. Add 20 mL of concentrated HNO_3 and 20 mL of concentrated HCl to the beaker. Evaporate to dryness.

9.2.25. Add 10 mL of $HClO_4$ and 10 mL of HNO_3 to the beaker. Cover with a watch glass.

9.2.26. Place samples on a hot plate on low heat. Evaporate to $HClO_4$ fumes. Transfer two samples at a time to a hot plate with the temperature set on high.

9.2.26.1. Watch for the reflux line. Vapor will go to the top of the watch glass and condensate will run down the sides of beaker.

9.2.26.2. When the process is complete, transfer the beaker to a hot plate set at 100°C.

9.2.26.3. Remove the watch glass and evaporate to 1 mL.

9.2.27. Transfer the residue to a 50-mL plastic centrifuge tube with 3 M HCl • 3 M HF to a volume of approximately 30 mL. Heat in a water bath for 10 min.

NOTE: If a large precipitate remains, add HF 1 mL at a time and heat for 10 min between additions. Continue addition of HF until most of the precipitate dissolves.

9.2.28. Add 3 mL of HF and 1 mL of yttrium carrier and heat for 20 min.

9.2.29. Remove the centrifuge tube from the water bath and cool for 20 min.

9.2.30. Centrifuge for 5 min and decant the supernate.

9.2.31. Wash the precipitate with 20 mL of 1 M HCl • 1 M HF. Centrifuge and discard the wash.

9.2.32. Add 3 mL of saturated H_3BO_3. Slurry the precipitate. Add 2 mL of concentrated HNO_3 and heat in a hot water bath until the precipitate dissolves.

9.2.33. Cover the sample with plastic wrap until all samples are ready for anion exchange.

9.3. Alcohol-nitric acid anion exchange.

9.3.1. Add 7.5 mL of ethanol saturated with $NaNO_2$ in the ratio of 3:2 to the sample. Mix and let stand for 1 h.

9.3.2. Anion-exchange column preparation.

9.3.2.1. Pack a small glass wool plug loosely into the tip of the ion-exchange tube.

9.3.2.2. Transfer MP-1, 100-200 mesh resin slurry into the tube to a settled height of 9 cm.

9.3.2.3. Place a beaker under the column and wash the resin with two 20-mL aliquots of fresh 60% ethanol • 40% 6 M HNO_3.

9.3.2.4. Cover the column with a watch glass to minimize alcohol evaporation.

9.3.3. Pour the sample through the column.

9.3.4. Wash the beaker and column with 5 mL of 60% ethanol • 40% 6 M HNO_3.

9.3.5. Wash the column twice with 20-mL aliquots of 75% methanol • 25% 6 M HNO_3.

9.3.6. Wash the column twice with 20-mL aliquots of 60% methanol • 40% 6 M HNO_3.

9.3.7. Add 200 mL of H_2O to the sample and evaporate on low heat to 100 mL. Count the solution to determine separation recovery from the column.

9.3.8. Place a new 100-mL beaker under the column. Elute americium from the column with two 20-mL aliquots of 60% methanol • 40% 2.5 M HNO_3.

9.3.9. Place the beaker on a hot plate and evaporate to 2 mL using low heat.

9.3.10. Add 2 mL of concentrated HCl to the beaker and evaporate to dryness. **DO NOT BAKE.**

9.3.11. Add 5 mL of concentrated HNO_3 to the beaker and evaporate to dryness. **DO NOT BAKE.**

9.3.12. Add 5 mL of 1 M HNO_3 to the beaker. Cover with plastic wrap until all samples are ready for filtration.

9.4. Filtration.

9.4.1. If the sample is dry, add 5 mL of 1 M HNO_3.

9.4.2. Prepare a mounting planchet.

9.4.2.1. Engrave the sample number on the back of the planchet.

9.4.2.2. Cut a piece of two-sided tape to fit each planchet.

9.4.3. Add 50 µg of Nd to each sample.

9.4.4. Prepare wash for filters.

9.4.4.1. For each sample fill a centrifuge tube with 5 mL of 1 M HNO_3 • 1 M HF and 50 µL of Nd.

9.4.4.2. Pour this solution through the filter before the sample.

9.4.5. Prepare filters.

9.4.5.1. Place a metal screen in the tower.

9.4.5.2. Place a millipore filter on top of the screen and float with a little distilled water to seat the filter. Turn on the vacuum to complete seating.

9.4.5.3. Attach the funnel, making sure that it is tight.

9.4.5.4. Add approximately 5 mL of distilled water to check the system.

9.4.5.5. Add wash for filter from Step 9.4.4.

9.4.5.6. Add 250 µL of HF to the sample **JUST BEFORE** filtering. Process one sample at a time and filter immediately.

9.4.5.7. Wash the beaker and tower with 5 mL of 1 M HNO_3 • 1 M HF.

9.4.5.8. Rinse the tower with 1 mL of 1 M HNO_3 • 1 M HF.

9.4.5.9. Rinse the tower two times with 1 mL of isopropyl alcohol. After the alcohol has passed through the filter, remove the tower and air dry the filter.

9.4.6. Mount the sample.

9.4.6.1. Remove the top layer of the two-sided tape.

9.4.6.2. Place the filter on the planchet and center it. Check the edges for seal.

9.4.6.3. Place the filter in a millipore container to transport to the count room.

10. Operation of Equipment

10.1. Refer to the operating manual for the alpha spectrometer.

10.2. Refer to Method No. CR100 for the alpha spectrometric counting procedure.

11. Calculations

11.1. Count samples for 80,000 s. Determine the counts for ^{241}Am and ^{243}Am by integrating the counts in 14 channels for each energy region.

11.2. Counting efficiency determinations for ^{241}Am and ^{243}Am.

11.2.1. Counting efficiencies for the tracer peak (E_t) and the analyte peak (E_x) will be calculated separately, using the same equations. The counting efficiency of the counter for a standard run is given by

$$E = \frac{\left(\frac{C_s}{T_s} - \overline{B}_s\right)}{A_s} ,$$

where E = counting efficiency in the peak of interest (counts per disintegration),
C_s = gross counts for the standard,
T_s = counting time for the standard (min),
$\overline{B}_s$ = average background count rate in the peak of interest, and
A_s = activity of the standard (dpm).

11.2.2. The average counting efficiency is calculated from a running average of the last n values of individual E determinations.

$$\overline{E} = \frac{\sum_{i=1}^{n} E_i}{n} ,$$

where $\overline{E}$ = the running average of the counting efficiency,
E_i = the individual counting efficiencies from Step 11.2.1, and
n = the number of measurements used for calculation.

11.2.3. The standard deviation of $\overline{E}$ is

$$SD(\overline{E}) = \overline{E} \times \sqrt{\frac{\sum_{i=1}^{n} (E_i - \overline{E})^2 + SD(\overline{B}_s)^2}{(n-1)\, n\, \overline{E}^{\,2}} + \frac{(\sigma_{A_s})^2}{A_s^{\,2}}} ,$$

where $SD(\overline{E})$ = standard deviation of the average efficiency,
$\overline{E}$ = average efficiency (counts per disintegration) from Step 11.2.2,
E_i = individual efficiencies from Step 11.2.1,
$SD(\overline{B}_s)$ = standard deviation of the average background in the peak of interest,
n = number of values of E used,
A_s = activity of the standard (dpm), and
σ_{A_s} = stated standard deviation associated with the known value of A_s.

11.2.4. The standard deviation of an individual E is

$$SD(E) = E \times \sqrt{\frac{\frac{C_s}{T_s^{\,2}} + \frac{C_{bs}}{T_{bs}^{\,2}}}{\left(\frac{C_s}{T_s} - \frac{C_{bs}}{T_{bs}}\right)^2} + \frac{(\sigma_{A_s})^2}{A_s^{\,2}}} ,$$

where $SD(E)$ = standard deviation of E (counts per disintegration),
E = counting efficiency from Step 11.2.1,
C_s = gross counts for the standard,
T_s = counting time for the standard,
C_{bs} = gross counts for the background,
T_{bs} = counting time for the background,
A_s = activity of the standard, and
σ_{A_s} = standard deviation of standard activity.

11.3. Background determination. There will be different backgrounds for the tracer (B_t), and the analyte (B_x) peaks, but the calculations will be the same.

11.3.1. The background count rate is

$$B = \frac{C_b}{T_b} ,$$

where B = background count rate (cpm),
C_b = gross counts of background, and
T_b = counting time of the background (min).

11.3.2. The running average background count rate is calculated by

$$\overline{B} = \frac{\sum_{i=1}^{n} B}{n} ,$$

where $\overline{B}$ = average background count rate,
B = background count rate, and
n = numbers of values used.

11.3.3. The standard deviation for the average background count rate is calculated by

$$SD(\overline{B}) = \overline{B} \times \sqrt{\frac{\sum_{i=1}^{n} (B - \overline{B})^2}{(n - 1)}} ,$$

where $SD(\overline{B})$ = standard deviation of the running average of the background,
$\overline{B}$ = average background from Step 11.3.2,
B = individual background count rate, and
n = number of values used.

11.3.4. The minimum detectable activity for low-background instruments is determined by

$$MDA = \frac{(4.65 \times SD\ (B_x)\ ) + 3}{K \times T_x} ,$$

where MDA = minimum detectable activity (dpm),
$SD\ (B_x)$ = standard deviation of the background count rate (cpm),
K = constant in sample units,
T_x = counting time,
4.65 = constant, and
3 = constant.

11.4 Tracer recovery.

11.4.1. The tracer recovery is calculated from

$$R_t = \frac{C_t}{T_t \times E_t \times A_t} ,$$

where R_t = fraction of the tracer recovered,
C_t = total counts in the tracer peak,
T_t = counting time for the tracer (min),
E_t = counting efficiency for the tracer peak, and
A_t = activity of tracer added to the sample (dpm).

11.4.2. The standard deviation of the tracer recovery is

$$SD(R_t) = R_t \times \sqrt{\frac{\frac{C_t}{T_t^2} + SD(B_t)}{\left(\frac{C_t}{T_t} - \overline{B}_t\right)^2} + \frac{\sigma_{A_t}^2}{A_t^2}} ,$$

where $SD(R_t)$ = standard deviation of the tracer recovery,
R_t = tracer recovery fraction,
C_t = counts in the tracer peak,
T_t = counting time (min),
$SD(B_t)$ = standard deviation of the background in the tracer peak,
$\overline{B}_t$ = the average background in the tracer peak,

σ_{A_t} = standard deviation of the known value of A_t, and
A_t = activity of the standard.

11.5. Sample activity.

11.5.1. The activity of the sample is given by

$$A_x = \frac{\left(\frac{C_x}{T_x} - \overline{B}_x\right)}{\overline{E}_x \times R_t} ,$$

where A_x = sample activity (dpm),
C_x = gross counts of the sample,
T_x = counting time of sample (min),
$\overline{B}_x$ = average background count rate (cpm),
$\overline{E}_x$ = average counting efficiency, and
R_t = tracer recovery fraction.

11.5.2. The standard deviation of the activity of the sample is given by

$$SD\ (A_x) = |A_x| \times \frac{\sqrt{\frac{C_x}{T_x^2} + SD^2\ (\overline{B}_x)}}{\left(\frac{C_x}{T_x} - \overline{B}_x\right)^2} ,$$

where $SD\ (A_x)$ = standard deviation of sample activity (dpm),
$|A_x|$ = absolute value of A_x from Step 11.5.1,
C_x = gross counts of the sample,
T_x = sample counting time,
$\overline{B}_x$ = average background count rate, and
$SD(\overline{B}_x)$ = standard deviation of the average background.

11.6. Calculation to put the radiometric measurement into the required form for final reporting.

11.6.1. Reported activity.

$$R_x = \frac{A_x}{K \times Q} ,$$

where R_x = sample activity in correct units for reporting (pCi/L),
A_x = sample activity (dpm),
K = conversion factor (2.22 pCi/dpm), and
Q = sample quantity analyzed.

11.6.2. The propagated uncertainty of the reported activity is calculated by

$$U_x = |R_x| \times \sqrt{\frac{SD\,(A_x)^2}{A_x^2} + \frac{SD\,(\overline{E}_x)^2}{\overline{E}_x^{\,2}} + \frac{SD\,(\overline{E}_t)^2}{\overline{E}_t^{\,2}} + \frac{SD\,(R_t)^2}{R_t^{\,2}} + \frac{SD\,(Q)^2}{Q^2}} \quad ,$$

where U_x = propagated uncertainty of the reported activity,
R_x = reported activity,
$SD\,(A_x)$ = standard deviation of sample activity,
$SD\,(\overline{E}_x)$ = standard deviation of the average sample efficiency,
$SD\,(\overline{E}_t)$ = standard deviation of the average tracer efficiency,
$SD(R_t)$ = standard deviation of the tracer recovery fraction,
$SD\,(Q)$ = standard deviation of the sample quantity aliquoted,
A_x = sample activity,
$\overline{E}_x$ = average counting efficiency in the sample peak,
$\overline{E}_t$ = average counting efficiency in the tracer peak,
R_t = tracer recovery fraction, and
Q = sample quantity aliquoted in reporting units.

12. Proper Waste Disposal Practices

12.1. Discard the filter and residue from Step 9.1.3.17 in the trash.

12.2. Discard the aqueous solution from Step 9.2.11 into the acid waste drain.

12.3. Dispose of the organic waste from Step 9.2.22 as nonhazardous waste through EM-7 according to AR 10-3.

12.4. Discard the supernates from Steps 9.2.29 and 9.2.30 into the acid waste drain.

12.5. Discard the solution from Step 9.3.6.1 into the acid waste drain.

12.6. Discard the filtrate from Step 9.4.5.9 into the acid waste drain.

12.7. Solid radioactive waste.

12.7.1. Sample planchets are stored for approximately one year. The planchets are then disposed of in the low-level radioactive waste according to SOP 2.

12.7.2. Complete a waste profile form and forward to the EM-9 radioactive waste coordinator for each addition of waste to the container.

12.8. Excess sample is returned to the Sample Management section.

12.9. Waste pickup.

12.9.1. See AR 10-3 for general Laboratory policy on waste disposal.

12.9.2. Fill out the waste Profile Request Form (PRF) and send it to EM-8 along with the pertinent MSDS sheets. The form will be returned to the group waste management coordinator, who will return it to the waste generator.

12.9.3. After the PRF is returned signed off by EM-8 and with a reference number, fill out the Chemical Waste Disposal Request (CWDR) form. Send this form and the original PRF(s) to EM-7.

12.9.4. After the CWDR is returned, call HS-1 to have an HP technician monitor and tag the container.

12.9.5. After the container has been tagged by the technician call EM-7 to arrange for pickup of the container.

13. Source Materials

13.1. D. Knab and R. J. Peters, "The Extraction of Americium and Plutonium from Environmental Samples with HDEHP-P_2O_5," Los Alamos Scientific Laboratory document LA-UR-76-1365 (September 1976).

13.2. D. Knab, "A Procedure for the Determination of Americium in Complex Matrices," Los Alamos Scientific Laboratory report LA-7057 (February 1978).

13.3. D. Knab, "Determination of Americium in Small Environmental Samples," *Anal. Chem.* **51**, 1095-1097 (1979).

13.4. D. Knab, "Filtration and Alpha Spectrometric Determination of Am or Pu Coprecipitated with Neodymium Fluoride," Los Alamos Scientific Laboratory document LA-UR-80-2204 (1980).

13.5. C. W. Sill and F. D. Hindman, "Preparation and Testing of Standard Soils Containing Known Quantities of Radionuclides," *Anal. Chem.* **46**, 113-118 (1974).

13.6. R. L. Williams, "A Computerized Alpha-Particle Spectrometry System for the Analysis of Low-Level Thorium, Uranium, Plutonium, and Americium Fractions," *Int. J. Radiat. Isot.* **35**, 271-277 (1984).

13.7. E. Holm, "Review of Alpha-Particle Spectrometric Measurements of Actinides," *Int. J. Radiat. Isot.* **35**, 285-290 (1984).

13.8. *EML Procedures Manual*, 26th ed., H. L. Volchok and G. de Planque, Eds. (Environmental Measurements Laboratory, US Department of Energy, New York, New York, HASL-300, 1986).

13.9. L. A. Currie, "Limits for Qualitative Detection and Quantitative Determination," *Anal. Chem.* **40** (3), 586 (1968).

13.10. "Chemical, Hazardous, and Mixed Waste," Administrative Requirement 10-3, in *Environment, Safety, and Health Manual*, Los Alamos National Laboratory Manual, Chapter 1 (most recent edition).

13.11. "Disposal of Solid Radioactive Waste from EM-9 Group Areas at TA-59, OH-1", SOP2, in *Environmental Chemistry Group: Environment, Safety and Health Manual*, Appendix III (most recent edition).

13.12. "Handling and Disposal of Hazardous Materials", SOP3, in *Environmental Chemistry Group: Environment, Safety, and Health Manual*, Appendix III (most recent edition).

13.3. "Disposal of Solid Radioactive Waste from EM-9 Group Areas at TA-59, OH-1" SOP 2 in *Enviromental Chemistry Group: Environment, Safety, and Health Manual*, Appendix III.

Revisions or additions to the procedure are marked (▒▒▒▒). Where a section heading is marked, the entire section has been revised.

TABLE I. ENERGY SPECTRUM FROM ALPHA SPECTROMETER

Channel	Counts	Channel	Counts
60	0	86	18
61	2	87	22
62	1	88	11*
63	1	89	8
64	1	90	2
65	2	91	6
66	3	92	2
67	6	93	5
68	7	94	1
69	17	95	2*
70	14	96	4
71	8	97	4
72	10	98	11
73	14	99	11
74	26	100	9
75	25*	101	20
76	32	102	22—Peak ^{241}Am
77	44	103	18 (5.5 MeV)
78	63	104	11
79	85	105	9
80	108	106	8
81	102	107	4
82	125—Peak ^{243}Am	108	*
83	94 (5.3 MeV)	111	0

*Counts integrated over 14 channels, 7 to left and 6 to the right of the energy peak.

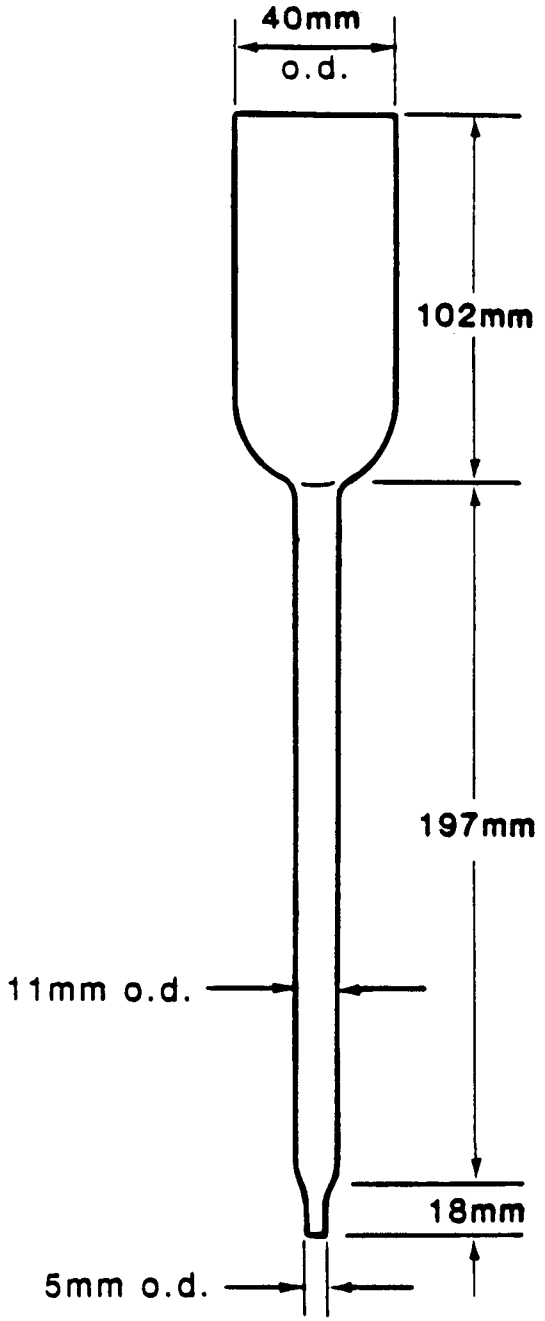

Fig. 1. Ion exchange column for americium.

AMERICIUM-241 IN ENVIRONMENTAL MATRICES (LESS THAN 2-GRAM SAMPLES) — ALPHA SPECTROMETRY

Analyte: Americium-241	**Method No.:** ER120
Matrix: Water and air particulates and biologicals with < 2 g solid residue	**Minimum Detectable Activity:** 0.02 pCi/sample
Procedure: Radiochemistry and alpha spectrometry	**Accuracy and Precision:** See Section 3
Effective Date: 02/01/78	**Authors:** Daryl Knab Richard J. Peters Wanita Eberhardt

SAFETY NOTE: Before beginning this procedure, read all of the Material Safety Data Sheets for the chemicals listed in Sec. 7. Read Sec. 4.3 of the EM-9 Safety Manual for further information on personal protective clothing and equipment. Read Sec. 12 of this procedure and Source Material 13.9 for proper waste disposal practices.

1. Principle of Method

1.1. Gamma-ray spectrometry in Method No. ER140 is used to screen samples for 59.5-keV ^{241}Am activity. Quantitative data are reported for those above the instrumental detection limit, while the remainder are subjected to chemical separation and alpha spectrometry.

1.2. For alpha spectrometry, americium is separated from matrix material by cation exchange in HCl. It is then separated from most actinides and lanthanides by anion exchange with alcohol-nitric acid solution and the americium is collected by coprecipitation on NdF_3 for counting by alpha spectrometry.

1.3. All samples are traced before wet ashing with ^{243}Am.

1.4. This procedure is suitable only for samples that have less than 2 g of solid residue. For samples with higher solid residue use Method No. ER110.

2. Sensitivity

2.1. Sensitivity is limited by the counter background.

2.2. For routine measurements with an 80,000-s counting period and a counting efficiency of 25%, the minimum detection limit (the 95th percentile of the background distribution) is 0.02 pCi per sample. Typical sample aliquots are

0.5 L of water, an air filter, or biological material containing less than 2 g of residue.

3. Accuracy and Precision

3.1. Average recovery of ^{243}Am tracer is 72% ± 5% for air filters and 57% ± 14% for waters.

3.2. The National Bureau of Standards and the DOE Environmental Measurements Laboratory (EML) produce and distribute certified materials for americium analysis in several matrices. We prepare in-house materials by pipetting known amounts of americium standards onto blank environmental matrices. Results on 1985 EML-Quality Assessment Program samples are indicative of our accuracy and precision (mean ± 1 standard deviation).

	May		November	
Matrix	EM-9	EML	EM-9	EML
Tissue (fCi/g)	4 ± 1	5 ± 1	367 ± 22	370 ± 7
Vegetation (fCi/g)	—	—	360 ± 60	320 ± 10
Filters (pCi/filter)	—	—	3.5 ± 0.3	5.3 ± 0.3
Waters (pCi/L)	75 ± 2	6 ± 6	39.9 ± 0.5	41 ± 3

4. Interferences

4.1. Mass loading of the filtered sample in excess of 100 μg interferes with alpha spectroscopy resolution.

4.2. Thorium-228, ^{224}Ra, ^{222}Rn, and ^{238}Pu interfere with ^{241}Am alpha spectroscopy determinations.

4.3. Excess mass loading on the cation column results in low ^{241}Am recoveries.

5. Collection and Storage of Samples

5.1. Acidify water samples with 10 mL of concentrated HNO_3 in the field at the time of collection. Filter samples, spike with tracer, and reacidify within 24 h of receipt in the laboratory and before sample storage.

5.2. There are no special collection and storage requirements for other environmental matrices.

6. Apparatus

6.1. Beakers: 100- and 200-mL, tall form, new.

6.2. Beakers: 600-mL, Pyrex.

6.3. Crucibles: 30-mL, with covers, platinum.

6.4. Graduated cylinder: 2-L.

6.5. Centrifuge tubes: 50-mL, polyethylene.

6.6. Centrifuge.

6.7. Ion exchange columns: 197-mm long by 7-mm i.d. with a 100-mL top reservoir and a tip tapered to 2 mm i.d.

6.8. Filter apparatus: 25-mm membrane.

6.9. Screen: stainless steel, for 25-mm filter No. 79791, Gelman.

6.10. Disks: 1-in.-diam, stainless steel.

6.11. Filters: 25-mm Millipore, 0.05-μm pore size.

6.12. Anaslide filter holder.

6.13. Pipettes: 50- and 250-μL with disposable tips.

6.14. Muffle furnace.

6.15. Hot plate: magnetic, stirring, Corning Model PC-351.

6.16. Alpha spectrometer: equipped with a 1024-channel analyzer using 300-mm^2 silicon-surface barrier detectors.

7. Reagents

7.1. Nitric acid (concentrated 69%, reagent-grade).

7.2. Hydrochloric acid (concentrated, reagent-grade).

7.3. Perchloric acid (concentrated, reagent-grade).

7.4. Hydrofluoric acid (concentrated 48%, reagent-grade).

7.5. Hydrochloric acid (0.5 M). Dilute 42 mL of concentrated HCl to 1000 mL with distilled water.

7.6. Hydrochloric acid (2 M). Dilute 167 mL of concentrated HCl to 1000 mL with distilled water.

7.7. Hydrochloric acid (4 M). Dilute 330 mL of concentrated HCl to 1000 mL with distilled water.

7.8. Resin (AG 50 x 4, 100-200 mesh, cation exchange). Bio-Rad Laboratories, Richmond, CA.

7.8.1. Transfer 1 lb of resin to a 2-L graduated cylinder with 2 L of 6 M HCl. Mix and let the resin settle. Decant the solution and resin fines.

7.8.2. Add deionized water to the resin to a volume of 2 L. Mix thoroughly and allow to settle. Decant the solution.

7.8.3. Continue the water washes until the wash pH is >2 (approximately five washes).

7.9. 1 M HCl • 1 M HF. Dilute 80 mL of concentrated HCl and 35 mL of concentrated HF with distilled water to a final volume of 1000 mL.

7.10. Boric acid (saturated). Add enough H_3BO_3 crystals (approximately 6 g at room temperature) to 100 mL of distilled water so that all of the crystals do not dissolve.

7.11. Hydrochloric acid (6 M). Dilute 500 mL of concentrated HCl to 1000 mL with distilled water.

7.12. NH_2OH • HCl. Fill a 1-lb bottle of NH_2OH • HCl with distilled water.

7.13. 60% ethanol • 40% 6 M HNO_3. Add 900 mL of ethanol to 600 mL of 6 M HNO_3. Prepare fresh before each use.

7.14. 75% methanol • 25% 6 M HNO_3. Add 1800 mL of methanol to 600 mL of 6 M HNO_3.

7.15. 60% methanol • 40% 6 M HNO_3. Add 1440 mL of methanol to 960 mL of 6 M HNO_3.

7.16. 60% methanol • 40% 2.5 M HNO_3. Add 1440 mL of methanol to 960 mL of 2.5 M HNO_3.

7.17. Nitric acid (6 M). Dilute 375 mL of concentrated HNO_3 to 1000 mL with distilled water.

7.18. Nitric acid (2.5 M). Dilute 156 mL of concentrated HNO_3 to 1000 mL with distilled water.

7.19. Nitric acid (1 M). Dilute 63 mL of concentrated HNO_3 to 1000 mL with distilled water.

7.20. Ethanol saturated with sodium nitrite.

7.21. Resin (MP-1, 100-200 mesh).

7.21.1. Transfer 1 lb of resin to a 2-L graduated cylinder with 6 M HNO_3. Let the resin settle and decant the liquid.

7.21.2. Add deionized water to a volume of 2 L. Mix thoroughly and allow to settle. Decant the liquid.

7.21.3. Repeat the water washes until the pH of the solution is >2.

7.22. 1 M HNO_3 • 1 M HF. Dilute 62 mL of concentrated HNO_3 and 36 mL of concentrated HF to 1000 mL with water.

7.23. Isopropyl alcohol.

7.24. Neodymium (1 mg/mL). Dissolve 1.17 g of Nd_2O_3 in a minimum amount of hot 6 M HNO_3. Dilute to 1000 mL with deionized water.

7.25. Americium-243 tracer (99.98% isotopic purity). Dilute to 10 dis/min per mL. Lawrence Livermore Laboratory, Radiochemistry Division.

7.26. Neodymium-147. Irradiate approximately 2 mg Nd_2O_3 at Omega West all day in R-4 or R-2. Dissolve the Nd_2O_3 in 5 mL 6 M HNO_3. Dilute to 50 mL with H_2O.

8. Calibration and Standards

8.1. All samples are traced with calibrated ^{243}Am tracer solution that has been standardized by electrodeposition and gross alpha counting. The value is checked annually.

8.2. Calibration of the alpha spectrometer.

8.2.1. The alpha secondary standard contains the isotopes ^{238}Pu, ^{239}Pu, and ^{242}Pu and is standardized in a gas flow proportional counter using the National Bureau of Standards (NBS) Standard Reference Material (SRM) 4906-B17, the ^{238}Pu primary standard.

8.2.2. Calibration counts are made for 1020 s. The efficiency of each detector is determined by integrating the counts in 20 channels (13 channels to the left of the peak and 6 channels to the right of the peak) of the energy spectrum of each of the three isotopes.

8.2.3. Background counts are accumulated for each energy spectrum for each detector for 60,000 s.

9. Procedure

9.1. Sample preparation.

9.1.1. Milling and sizing of solid samples is critical to obtain representative samples. The following dissolution procedures are used if the samples are to be measured for ^{241}Am. If plutonium isotopes are to be determined simultaneously, go to Step 9.1.2 of Method No. ER160 and return to Step 9.2.1 below.

9.1.2. Water samples.

9.1.2.1. Measure a 500-mL aliquot of the water sample into a 600-mL pyrex beaker.

9.1.2.2. Add 1 mL of ^{243}Am tracer to the sample.

9.1.2.3. Add 10 mL of concentrated HNO_3 and evaporate the solution to dryness.

NOTE: A 600-mL beaker on a Corning Model PC-351 hot plate set at "2" can be left unattended for 15 h (overnight).

9.1.2.4. Add 10 mL of concentrated HNO_3 and heat to boiling. When the sample begins steaming, **CAREFULLY** add 6 drops of 48% HF while swirling the sample. Evaporate to dryness.

CAUTION: HF is extremely hazardous. Wear rubber gloves, eye protection, and a lab coat. Completely clean up all spills and wash thoroughly after using HF. Make all HF transfers in an exhaust fume hood to avoid the toxic fumes.

9.1.2.5. Carefully wash down the sides of the beaker with approximately 10 mL of concentrated HNO_3.

9.1.2.6. While heating the sample, add 30% H_2O_2 by drops to decompose any organic material. Repeated additions of concentrated HNO_3 and H_2O_2 may be required to completely

ash some samples. Wet ashing is complete when the residue is white or very light yellow when dry.

9.1.2.7. Dissolve the residue in approximately 20 mL of concentrated HNO_3, carefully washing down the sides of the beaker.

9.1.2.8. Add 5 mL of concentrated HCl to the beaker and evaporate to approximately 1 mL. Remove the sample from the hot plate and cool.

9.1.2.9. Add 20 mL of 6 M HCl and 1 mL of saturated H_3BO_3 solution to the sample.

9.1.2.10. Cover the beaker with plastic wrap and store until ready for the cation column.

9.1.3. Vegetation dissolution.

9.1.3.1. Samples up to approximately 20 g are dried at 60°C in tared glass beakers until a constant weight is obtained on successive days.

9.1.3.2. Add 20 mL of distilled water to the beaker. Cover with perforated aluminium foil. Ash at 100-200°C for 8 h.

9.1.3.3. Ash at 300°C overnight.

9.1.3.4. Ash at 400°C for 8 h.

9.1.3.5. Ash at 500°C until the sample ash is completely white.

9.1.3.6. Cool and weigh the sample. Record the ash weight.

9.1.3.7. Repeat Steps 9.1.3.5 and 9.1.3.6 until a constant weight is achieved.

NOTE: The entire ash sample is frequently transferred to a 500-mL polyethylene bottle for gamma-emitting radionuclide analysis using Ge(Li) gamma-ray spectroscopy.

9.1.3.8. Dissolve the entire sample in approximately 20 mL of HNO_3. Add 1 mL of ^{243}Am tracer solution before continuing with the dissolution.

9.1.3.9. Heat the sample on a hot plate and add 30% H_2O_2 in small amounts until the sample dries to a clear residue. The color may vary from pure white to deep lilac.

NOTE: Attention to temperature is important, because samples can bump violently if overheated.

9.1.3.10. Dissolve the residue in a mixture of 10 mL of concentrated HNO_3 and 5 mL of concentrated HCl. Evaporate to 1 mL.

9.1.3.11. Remove the sample from the hot plate and cool. Dilute to 10 mL with 6 M HCl. Let the sample stand overnight.

9.1.3.12. Cover the beaker with plastic wrap and store until ready for the cation column.

9.1.4. Tissue dissolution (including bone).

9.1.4.1. Weigh a 10-g aliquot of wet soft tissue or bone, excluding feathers and hide, into a 600-mL glass beaker.

9.1.4.2. Add 1 mL of ^{243}Am tracer to the sample.

9.1.4.3. Wet ash the sample with concentrated HNO_3 and 30% H_2O_2 until a clear or light yellow solution is obtained.

NOTE: Do not use HF because insoluble CaF_2 precipitates are formed.

9.1.4.4. Evaporate the solution until just dry.

9.1.4.5. Continue the procedure for water samples from Step 9.1.2.7 to 9.1.2.10.

9.1.5. Filter dissolution (air particulate, industrial hygiene swipe).

9.1.5.1. Place the air particulate filter into a 30-mL platinum crucible. Add 2 mL of ethanol to the filter. Add 1 mL of ^{242}Am tracer to the wetted filter. Air dry the filter overnight.

9.1.5.2. Record the crucible and sample number.

9.1.5.3. Place the crucible in a cold muffle furnace. Turn the furnace to 500°C and dry ash for 4 h. Turn the furnace off and remove the crucible. Allow the crucible to cool for 1/2 h.

9.1.5.4. Ashing will not be complete if glass fiber filters are used. After cooling, add 5 to 10 mL of concentrated HF a few drops at a time. Cover with a platinum lid.

9.1.5.5. Evaporate the sample to dryness on medium heat.

9.1.5.6. Repeat Steps 9.1.5.4 and 9.1.5.5. Remove the sample from the hot plate and allow to cool.

9.1.5.7. Carefully wash down the cover and sides of the crucible with approximately 5 mL of concentrated HNO_3.

9.1.5.8. **CAUTIOUSLY** add 1-2 drops of 30% H_2O_2 to the crucible. When the vigorous reaction subsides, repeat the addition of H_2O_2 until the solution is clear or straw-colored.

9.1.5.9. Evaporate the solution in the crucible to approximately 1 mL.

9.1.5.10. Add 2 mL of saturated H_3BO_3 solution and heat to dissolve the sample.

9.1.5.11. Transfer the sample to a NEW 250-mL beaker using approximately 10 mL of concentrated HNO_3. Add 5 mL of concentrated HNO_3 to the platinum crucible. Repeat Steps 9.1.5.10 and 9.1.5.11 once.

9.1.5.12. Evaporate the solution to 1 mL. Add 20 mL of concentrated HCl and evaporate to 1 mL.

9.1.5.13. Add 20 mL of 6 M HCl and cover with plastic wrap and store until ready for the cation column.

9.2. Cation exchange column.

9.2.1. Evaporate the solution to dryness on low heat using either the sample as dissolved above or the americium fraction from the plutonium anion-exchange column (see Step 9.2.6.1 of the plutonium procedure Method No. ER160).

9.2.2. Add 20 mL of concentrated HCl to the dissolved sample residue, rinsing the sides of the beaker. Add sufficient Nd-147 tracer to yield ~ 40 000 counts/min on the well counter. Evaporate to dryness.

9.2.3. Add 20 mL of concentrated HCl to the sample and evaporate to 4 mL. While the sample is still warm, dilute to 50 mL with water.

9.2.4. Cation exchange column preparation.

9.2.4.1. Pack a small glass wool plug loosely into the tip of the ion exchange tube.

9.2.4.2. Transfer AG 50 x 4, 100-200 mesh resin slurry into the tube to a settled height of 17 cm. Wash the resin with two 20-mL aliquots of 0.5 M HCl.

9.2.5. Filter the sample onto the column.

9.2.6. Wash the beaker and column with 10 mL of 0.5 M HCl.

9.2.7. Wash the column with four 25-mL aliquots of 2.0 M HCl. Let each addition drain to the resin before adding the next aliquot. Discard the column washes.

9.2.8. Place a 100-mL beaker under the column and elute Am with three 25-mL aliquots of 4 M HCl.

9.2.9. Add 5 mL of concentrated HNO_3 to the solution and evaporate until just dry. **DO NOT BAKE.**

9.2.10. Add 2 mL of 6 M HNO_3 to the sample and cover with plastic wrap and store until ready for the anion column.

9.3. Alcohol-nitric acid anion exchange.

9.3.1. Add 3 mL of ethanol saturated with $NaNO_2$ to each 2 mL of the sample from Step 9.2.10. Mix and let stand for 1 h.

9.3.2. Anion exchange column preparation.

9.3.2.1. Pack a small glass wool plug loosely into the tip of the ion exchange tube.

9.3.2.2. Transfer MP-1, 100-200 mesh resin slurry into the tube to a settled height of 9 cm. Place a beaker under the column.

9.3.2.3. Wash the resin with two 20-mL aliquots of fresh 60% ethanol • 40% 6 M HNO_3.

9.3.2.4. Cover the column with a watch glass to minimize alcohol evaporation.

9.3.3. Pour the sample through the column.

9.3.4. Wash the beaker and column with 5 mL of 60% ethanol • 40% 6 M HNO_3. Collect these and the next two washes in the beaker.

9.3.5. Wash the column with two 20-mL aliquots of 75% methanol • 25% 6 M HNO_3.

9.3.6. Wash the column with two 20-mL aliquots of 60% methanol • 40% 6 M HNO_3.

9.3.7. Add 200 mL H_2O to the beaker containing the washes. Evaporate the solution on low heat to 50 mL. Transfer the solution to a plastic bottle. Count the solution to determine the Nd-147 separation. If the $^{241}Am/^{147}Nd$ separation is adequate, ~40%, discard the wash.

9.3.8. Place a new 100-mL beaker under the column. Elute americium from the column with two 20-mL aliquots of 60% methanol • 40% 2.5 M HNO_3.

9.3.9. Place the beaker on a hot plate and evaporate to 2 mL using low heat.

9.3.10. Add 2 mL of concentrated HCl to the beaker and evaporate to dryness. **DO NOT BAKE.**

9.3.11. Add 5 mL of concentrated HNO_3 to the beaker and evaporate to dryness. **DO NOT BAKE.**

9.3.12. Add 5 mL of 1 M HNO_3 to the beaker. Cover the beaker with plastic wrap until all samples are ready for filtration.

9.4. Filtration.

9.4.1. If the sample is dry, add 5 mL of 1 M HNO_3.

9.4.2. Prepare a mounting planchet.

9.4.2.1. Engrave the sample number on the back of the planchet.

9.4.2.2. Cut a piece of two-sided tape to fit each planchet.

9.4.3. Add 50 μL of Nd to each sample.

9.4.4. Prepare wash for filters.

9.4.4.1. For each sample fill a centrifuge tube with 5 mL of 1 M HNO_3 • 1 M HF and 50 μL of Nd.

9.4.4.2. Pour this solution through the filter before the sample.

9.4.5. Prepare filters.

9.4.5.1. Place a stainless-steel screen in the tower.

9.4.5.2. Place a millipore filter on top of the screen and float with a little distilled water to seat the filter. Turn on the vacuum to complete seating.

9.4.5.3. Attach the funnel, making sure that it is tight.

9.4.5.4. Add approximately 5 mL of distilled water to check the system for leaks.

9.4.5.5. Add wash for the filter from Step 9.4.4.

9.4.5.6. Add 250 μL of HF to the sample **JUST BEFORE** filtering. Process one sample at a time and filter immediately.

9.4.5.7. Wash the beaker and tower with 5 mL of 1 M HNO_3 • 1 M HF.

9.4.5.8. Rinse the tower with 1 mL of 1 M HNO_3 • 1 M HF.

9.4.5.9. Rinse the tower with two 1-mL aliquots of isopropyl alcohol. Turn off the vacuum after the alcohol has passed through the filter.

NOTE: Do not rinse the filter with water.

9.4.6. Mount the sample.

9.4.6.1. Remove the top layer of the two-sided tape.

9.4.6.2. Place the filter on the planchet and center it. Check the edges for seal.

9.4.6.3. Place the filter in an Anaslide filter holder to transport to the count room.

10. Operation of Equipment

10.1. Refer to the operating manual for the alpha spectrometer.

11. Calculations

11.1. Count samples for 80,000 s. Determine the counts for ^{241}Am and ^{243}Am by integrating the counts in 14 channels for each energy region.

11.2. Counting efficiency determinations for ^{241}Am and ^{243}Am.

11.2.1. Counting efficiencies for the tracer peak (E_t) and the analyte (E_x) peak will be calculated separately, using the same equations. The counting efficiency of the counter for a standard run is given by

$$E = \frac{\left(\frac{C_s}{T_s} - \overline{B}_s\right)}{A_s} ,$$

where E = counting efficiency in the peak of interest (counts per disintegration),
C_s = gross counts for the standard,
T_s = counting time for the standard (min),
$\overline{B}_s$ = average background count rate in the peak of interest, and
A_s = activity of the standard (dis/min).

11.2.2. The average counting efficiency is calculated from a running average of the last n values of individual E determinations.

$$\overline{E} = \frac{\sum_{i=1}^{n} E_i}{n} ,$$

where $\overline{E}$ = the running average of the counting efficiency,
E_i = the individual counting efficiencies from Step 11.2.1, and
n = the number of measurements used for calculation.

11.2.3. The standard deviation of $\overline{E}$ is

$$SD(\overline{E}) = \sqrt{\frac{\sum_{i=1}^{n} (E_i - \overline{E})^2 + SD(\overline{B}_s)^2}{(n-1)\, n\, \overline{E}^{\,2}} + \frac{(\sigma_{A_s})^2}{A_s^{\,2}}} ,$$

where $SD(\overline{E})$ = standard deviation of the average efficiency,
$\overline{E}$ = average efficiency (counts per disintegration) from Step 11.2.2,
E_i = individual efficiencies from Step 11.2.1,
$SD(\overline{B}_s)$ = standard deviation of the average background in the peak of interest,
n = number of values of E used,
σ_{A_s} = stated standard deviation associated with the known value of A_s, and
A_s = activity of the standard (dis/min).

11.2.4. The standard deviation of an individual E is

$$SD\ (E) = \sqrt{\frac{\frac{C_s}{T_s^2} + \frac{C_{bs}}{T_{bs}^2}}{\left(\frac{C_s}{T_s} - \frac{C_{bs}}{T_{bs}}\right)^2} + \frac{(\sigma_{A_s})^2}{A_s^2}} ,$$

where SD (E) = standard deviation of E (counts per disintegration),
C_s = gross counts for the standard,
T_s = counting time for the standard,
C_{bs} = gross counts for the background,
T_{bs} = counting time for the background,
σA_s = standard deviation of standard activity, and
A_s = activity of the standard.

11.3. Background determination. There will be different backgrounds for the tracer (B_t), and the analyte (B_x) peaks, but the calculations will be the same.

11.3.1. The background count rate is

$$B = \frac{C_b}{T_b} ,$$

where B = background count rate (counts/min),
C_b = gross counts for the background, and
T_b = counting time for the background (min).

11.3.2. The running average background count rate is calculated by

$$\overline{B} = \frac{\sum_{i=1}^{n} B}{n} ,$$

where $\overline{B}$ = average background count rate,
B = background count rate, and
n = numbers of values used.

11.3.3. The standard deviation for the average background count rate is calculated by

$$SD(\overline{B}) = \sqrt{\frac{\sum_{i=1}^{n} (B - \overline{B})^2}{(n - 1)}} ,$$

where $SD(\overline{B})$ = standard deviation of the running average of the background,
$\overline{B}$ = average background from Step 11.3.2,
B = individual background count rate, and
n = number of values used.

11.3.4. The minimum detectable activity for low-background instruments is determined by

$$MDA = \frac{(4.65 \times SD(B_x)) + 3}{K \times T_x} ,$$

where MDA = minimum detectable activity (dis/min),
$SD(B_x)$ = standard deviation of the background count rate (counts/min),
K = constant in sample units,
T_x = counting time,
4.65 = constant, and
3 = constant.

11.4 Tracer recovery.

11.4.1. The tracer recovery is calculated from

$$R_t = \frac{C_t}{T_t \times E_t \times A_t} ,$$

where R_t = fraction of the tracer recovered,
C_t = total counts in the tracer peak,
T_t = counting time for the tracer (min),
E_t = counting efficiency for the tracer peak, and
A_t = activity of tracer added to the sample (dis/min).

11.4.2. The standard deviation of the tracer recovery is

$$SD(R_t) = \sqrt{\frac{\frac{C_t}{T_t^2} + SD(B_t)^2}{\left(\frac{C_t}{T_t} - \overline{B}_t\right)^2} + \frac{\sigma_{A_t}^2}{A_t^2}} ,$$

where $SD(R_t)$ = standard deviation of the tracer recovery,
C_t = counts in the tracer peak,
T_t = counting time (min),
$SD(B_t)$ = standard deviation of the background in the tracer peak,
$\overline{B}_t$ = the average background in the tracer peak,
σ_{A_t} = standard deviation of the known value of A_t, and
A_t = activity of the standard.

11.5. Sample activity.

11.5.1. The activity of the sample is given by

$$A_x = \frac{\left(\frac{C_x}{T_x} - \overline{B}_x\right)}{\overline{E}_x \times R_t} ,$$

where A_x = sample activity (dis/min),
C_x = gross counts for the sample,
T_x = counting time for the sample (min),
$\overline{B}_x$ = average background count rate (counts/min),
$\overline{E}_x$ = average counting efficiency, and
R_t = tracer recovery fraction.

11.5.2. The standard deviation of the activity of the sample is given by

$$SD\ (A_x) = \sqrt{\frac{\frac{C_x}{Tx^2} + SD^2\ (\overline{B_x})}{\left(\frac{C_x}{T_x} - \overline{B_x}\right)^2}}$$

where $SD\ (A_x)$ = standard deviation of sample activity (dpm),

C_x = gross counts for the sample,
T_x = sample counting time,
$SD^2(\overline{B}_x)$ = standard deviation for the average background, and
$\overline{B}_x$ = average background count rate.

11.6. Calculation to put the radiometric measurement into the required form for final reporting.

11.6.1. Reported activity.

$$R_x = \frac{A_x}{K \times Q} ,$$

where R_x = sample activity in correct units for reporting (pCi/L),
A_x = sample activity (dis/min),
K = conversion factor (2.22 pCi per dis/min), and
Q = sample quantity analyzed.

11.6.2. The propagated uncertainty of the reported activity is calculated by

$$U_x = |R_x| \times \sqrt{SD\ (A_x)^2 + SD(\overline{E}_x)^2 + SD\ (\overline{E}_t)^2 + SD\ (R_t)^2 + \frac{SD\ (Q)^2}{Q^2}}$$

where U_x = propagated uncertainty of the reported activity,
R_x = reported activity,
$SD\ (A_x)$ = standard deviation of sample activity,
$SD\ (\overline{E}_x)$ = standard deviation of the average sample efficiency,
$SD\ (\overline{E}_t)$ = standard deviation of the average tracer efficiency,
$SD(R_t)$ = standard deviation of the tracer recovery fraction,
$SD\ (Q)$ = standard deviation of the sample quantity aliquoted,
Q = sample quantity aliquoted in reporting units.

12. Proper Waste Disposal Practices

12.1. Discard the acidic solutions from the cation column, Step 9.2.7, into the acid waste drain system.

12.2. Discard the low-level ^{147}Nd solution, Step 9.3.7, into the acid waste system.

12.3. Discard the filter washes into the acid waste system.

12.4. Return excess sample to the EM-9 Sample Management Section.

13. Source Materials

13.1. D. Knab, "A Procedure for the Determination of Americium in Complex Matrices," Los Alamos Scientific Laboratory report LA-7057 (February 1978).

13.2. D. Knab, "Determination of Americium in Small Environmental Samples," *Anal. Chem.* **51**, 1095-1097 (1979).

13.3. D. Knab, "Filtration and Alpha Spectrometric Determination of Am or Pu Coprecipitated with Neodymium Fluoride," Los Alamos Scientific Laboratory document LA-UR-80-2204 (1980).

13.4. M. A. Gautier, E. S. Gladney, and B. T. O'Malley, "Quality Assurance for Environmental Analytical Chemistry: 1985," Los Alamos National Laboratory report LA-10813-MS (1986).

13.5. E. Holm, "Review of Alpha-Particle Spectrometric Measurements of Actinides," *Int. J. Radiat. Isot.* **35**, 285-290 (1984).

13.6. R. L. Williams, "A Computerized Alpha-Particle Sepctrometry System for the Analysis of Low-Level Thorium, Uranium, Plutonium, and Americium Fractions," *Int. J. Radiat. Isot.* **35**, 271-277 (1984).

13.7. *EML Procedures Manual*, 26th ed., H. L. Volchok and G. de Planque, Eds. (Environmental Measurements Laboratory, US Department of Energy, New York, New York, HASL-300, 1986).

13.8. L. A. Currie, "Limits for Qualitative Detection and Quanititative Determination," *Anal. Chem.* **40** (3), 586 (1968).

13.9. "Chemical, Hazardous, and Mixed Waste," Administrative Requirement 10-3, in *Environment, Safety, and Health Manual*, Los Alamos National Laboratory Manual, Chapter 1 (most recent edition).

Revisions or additions to the procedure are marked (▒▒▒). Where a section heading is marked, the entire section has been revised.

TABLE I. ENERGY SPECTRUM FROM ALPHA SPECTROMETER

Channel	Counts	Channel	Counts
60	0	86	18
61	2	87	22
62	1	88	11*
63	1	89	8
64	1	90	2
65	2	91	6
66	3	92	2
67	6	93	5
68	7	94	1
69	17	95	2*
70	14	96	4
71	8	97	4
72	10	98	11
73	14	99	11
74	26	100	9
75	25*	101	20
76	32	102	22—Peak ^{241}Am
77	44	103	18 (5.5 MeV)
78	63	104	11
79	85	105	9
80	108	106	8
81	102	107	4
82	125—Peak ^{243}Am	108	4*
83	94 (5.3 MeV)	109	3
84	63	110	1
85	29	111	0

*Counts integrated over 14 channels, 7 to the left and 6 to the right of the energy peak.

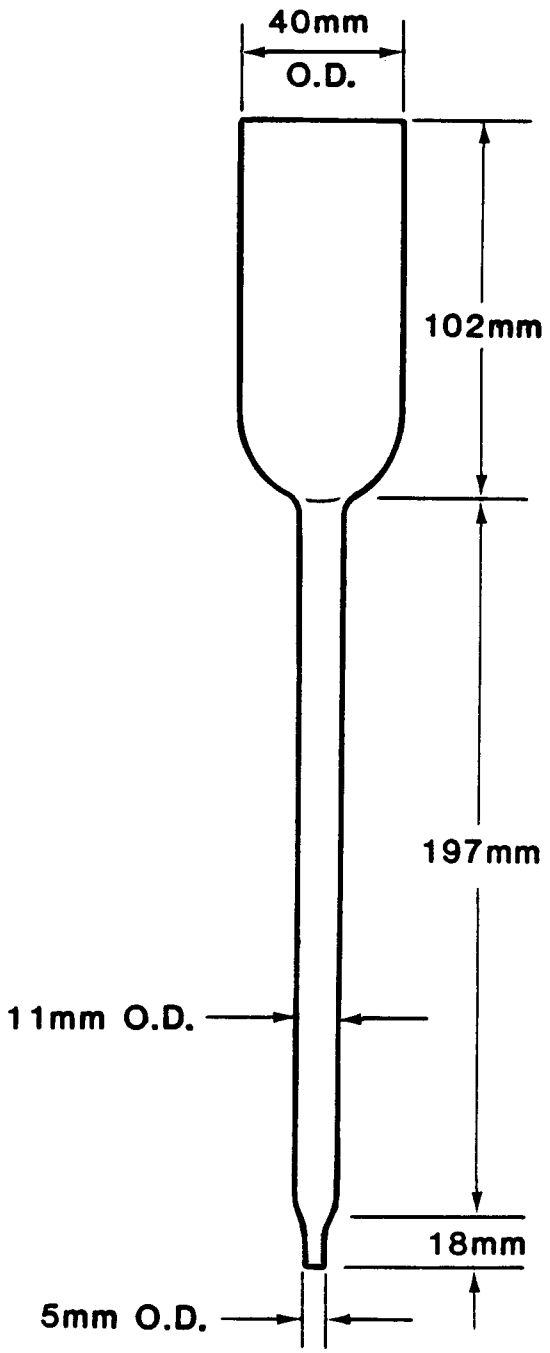

Fig. 1. Ion exchange column for americium.

GAMMA-RAY-EMITTING NUCLIDES IN ENVIRONMENTAL MATRICES — INSTRUMENTAL METHOD

Analyte: ^{7}Be, ^{51}Cr, ^{22}Na, ^{54}Mn, ^{57}Co, ^{60}Co, ^{106}Ru, ^{65}Zn, ^{134}Cs, ^{137}Cs, ^{131}I, ^{40}K, ^{241}Am, ^{152}Eu, ^{154}Eu, and others as required.	**Method No.:** ER130
Matrix: Geologicals, vegetation, or water	**Sensitivity:** variable
Procedure: Instrumental gamma-ray spectrometry using Ge(Li) or high-purity intrinsic Ge (HPGe) detectors	**Accuracy and Precision:** Matrix dependent
Effective Date: 01/01/84	**Authors:** George H. Brooks Daryl Knab Ernest S. Gladney

SAFETY NOTE: Before beginning this procedure, read all of the Material Safety Data Sheets for the chemicals listed in Sec. 7. Read Sec. 4.3 of the EM-9 Safety Manual for information on personal protective clothing and equipment. Read Sec. 12 of this procedure for proper waste disposal practices.

1. Principle of Method

1.1. Gamma-ray emitting nuclides are determined in almost any matrix, without employing chemical separations, by instrumental gamma-ray spectrometry using Ge(Li) or high-purity intrinsic Ge (HPGe) detectors.

1.2. Quantitative data are obtained by comparing net gamma-ray peak areas of the cleanest gamma-ray transition with matrix-based standards of known gamma-nuclide content.

2. Sensitivity

2.1. Sensitivity is limited by the counter background, sample self-absorption, and occasionally by direct gamma-ray interferences.

2.2. It is rare that any two Ge crystals have exactly the same gamma-ray sensitivity characteristics. Sensitivity must be determined individually for each crystal.

3. Accuracy and Precision

3.1. The accuracy for environmental matrices is limited by differences in the density, geometry, self-absorption characteristics of the sample, the isotope of

interest, and the specific detector used. Precision is primarily limited by the low peak/background ratios. By incorporating these factors, along with data from secondary standards, a minimum of 15% uncertainty was determined as a standard for routine analyses. Uncertainties for low-activity samples based on standard counting statistics are reported whenever they exceed 15%.

4. Interferences

4.1. Potential gamma-ray spectral interferences are found in Source Material 12.1.

4.2. Be aware of direct detector contamination from samples or improperly shielded high-level sources in or near the count room. These potential problem areas can be monitored by systematically counting detector backgrounds each week.

5. Collection and Storage of Samples

5.1. Filter and acidify water samples soon after collection. There are no special collection or storage requirements for other matrices.

6. Apparatus

6.1. Filter apparatus for 45 mm filters.

6.2. Pipettes: 5-mL, with disposable tips.

6.3. Gamma-ray spectrometer: equipped with Ge(Li) or HPGe detectors.

6.4. Bottles: 500-mL, polyethylene.

6.5. Analytical balance: 300-g capacity.

6.6. Graduated cylinder: 500-mL.

6.7. Filters: 0.45-μm, Millipore.

6.8. Grinding mill: Brinkman or Wiley.

7. Reagents

7.1. Nitric acid (concentrated, reagent-grade).

7.2. Hydrochloric acid (concentrated, reagent-grade).

7.3. Hydrochloric acid (0.1 M). Dilute 8.3 mL concentrated HCl to 1 L.

8. Calibration and Standards

8.1. Maintain National Institute of Standards and Technology (NIST) traceability throughout the calibration procedures. Radioactive standard solutions can be acquired directly from NIST, Environmental Protection Agency (EPA)-Las Vegas, Amersham, Isotope Products Laboratory, or any other commercial vendor of radioactive standards. In most cases the EPA (or the other vendors) can provide formal traceability to NBS for a minimal cost.

8.2. Counter efficiencies should be generated for each environmental matrix encountered by EM-9. This can be done in either of two ways: (1) generate efficiencies for each specific matrix from mono-isotopic sources (i.e., use a ^{7}Be standard for ^{7}Be efficiency in the matrix of choice), or (2) generate efficiencies for each specific matrix using a multi-isotopic standard (i.e., ^{152}Eu, ^{154}Eu, Sb-Sb-125 mixed solution).

8.2.1. Solutions: Mono-isotopic.

8.2.1.1. Add a weighed (gravimetric) amount of radioactive standard solution to commonly used containers of varying geometries and bring to volume with 0.1 M HCl. Cap tightly to minimize evaporation throughout the standard's lifetime.

8.2.1.2. Count the standards in each geometry that will be used for the samples. Reduce the spectral data using the EM-9 GAMS program on the VAX.

8.2.2. Solutions: Multi-isotopic.

8.2.2.1. Add a weighed (gravimetric) amount of radioactive standard solution to commonly used containers of varying geometries and bring to volume with 0.1 M HCl. Cap tightly to minimize evaporation throughout the standard's lifetime.

8.2.2.2. Count the multi-isotopic standards for each geometry encountered. Reduce the spectral data using the EM-9 GAMS data reduction program on the VAX. Since multipoint standards are being used for the efficiency determination, the correct branching ratios need to be utilized for each energy of each isotope. After the data have been reduced, plot the efficiency as a function of the energy. Determine the equation (linear, logarithmic, power, or exponential) giving the best fit to the data (based on statistical characteristics), and use this to characterize the efficiency for that specific matrix. The analyst need only know the energy and branching ratio of the isotope of

interest to determine the efficiency needed for final quantitative determination of the sample.

8.2.3. Solids: Mono- and Multi-isotopic.

8.2.3.1. Add a weighed amount of radioactive standard solution to the matrix. Dry at room temperature and ball-mill thoroughly to insure homogeneity.

8.2.3.2. Prepare separate containers for each geometry to be calibrated and for varying masses of the matrix (25, 50, and 100 g).

8.2.3.3. Count the standards in each geometry that will be used for the samples. Reduce the spectral data using the EM-9 GAMS program on the VAX.

8.2.4. Determine the absolute efficiencies for each detector annually. This will monitor the performance of each detector regardless of matrix or sample size. If the detector configuration changes, this operation will indicate whether there are any problems with the system.

8.3. Monitor the relative efficiency of each detector monthly using NIST Standard Reference Material (SRM) 4218-E, a ^{152}Eu point source.

8.4. Count backgrounds each week for 10,000 s.

8.5. Maintain detector energy calibrations at 1 keV/channel and check each week with either the NBS SRM 4215, a point-source mixed-nuclide gamma-ray standard, or NBS SRM 4218-E, a ^{152}Eu point source.

9. Procedure

9.1. Sample preparation.

9.1.1. Water samples, 500 mL.

9.1.1.1. Filter the sample using 0.45-μm Millipore filter material.

9.1.1.2. Measure 500 mL of sample into a graduated cylinder and pour into a 500-mL polyethylene bottle.

9.1.2. Water samples, 900 mL.

9.1.2.1. Place 900 mL of water and 5 mL of concentrated HNO_3 into a 1-L glass beaker. Evaporate the solution to dryness overnight on a hot plate, medium setting.

9.1.2.2. Dissolve the residue in approximately 10 mL of concentrated HNO_3. Wash down the sides of the beaker with HNO_3 and 6 drops of HF.

CAUTION: HF is extremely corrosive.

The amount of HNO_3 used is not as critical, but the sides of the beaker must be washed down thoroughly.

9.1.2.3. Boil the sample to dryness to volatilize any silica.

9.1.2.4. Dissolve the residue in approximately 10 mL of concentrated HNO_3 and treat the solution with 30% H_2O_2 until all organic material is destroyed and the sample residue is white or pale yellow and dry. Carefully add H_2O_2 to avoid spattering. Usually 1-2 mL of H_2O_2 are required.

9.1.2.5. Add 10-15 mL of concentrated HNO_3 and 5-10 mL of HCl to the sample. Heat until the evolution of NO_2 ceases and the sample is clear or pale yellow. Continue heating until 2-3 mL remain.

NOTE: Do not let the sample go to dryness.

9.1.2.6. Dissolve the residue in approximately 10 mL of 7.2 M HNO_3, washing down the sides of the beaker.

9.1.2.7. Proceed with Steps 9.1.4.5 through 9.1.4.10.

9.1.3. Soil samples, direct count.

9.1.3.1. Dry the samples for 48 h at 400°C.

9.1.3.2. Weigh 200 g of sample into a 500-mL polyethylene bottle. Add clean 1-in. ball bearings. Cap the bottle and ball-mill the sample for several hours.

9.1.3.3. Weigh 100 g of milled sample into a new 500-mL polyethylene bottle.

9.1.4 Soils, acid leach.

9.1.4.1 Place 2 g of dried soil into a 50-mL beaker.

9.1.4.2. Add 10 mL of concentrated HNO_3 and 5-10 drops of concentrated HCl to the beaker. Swirl carefully and allow to leach overnight at room temperature.

9.1.4.3. Heat the sample until the yellow-orange NO_2 fumes no longer appear.

9.1.4.4. Transfer the sample to a 40-mL glass centrifuge tube. Rinse the beaker with 5 to 10 mL of 7.2 M HNO_3 and add the rinse to the centrifuge tube. Centrifuge for 5 min.

9.1.4.5. Write the sample number on the bottom of a planchet. Record the sample number and planchet weight in a Laboratory notebook.

9.1.4.6. Carefully decant the acid mixture from the centrifuge tube to the preweighed planchet.

9.1.4.7. Rinse the centrifuge tube with approximately 5 mL of 7.2 M HNO_3 and decant the wash to the planchet.

9.1.4.8. Evaporate the solution on the planchet to dryness under a heat lamp. Control the heating rate so that the sample does not spatter.

9.1.4.9. Allow the planchet to cool, reweigh, and record the weight.

9.1.4.10. Cover the sample tightly with mylar film.

9.1.4. Vegetation.

9.1.4.1. Ash samples to a constant weight at 450°C.

9.1.4.2. Grind in Wiley mill, Brinkman mill, or similar device.

9.1.4.3. Weigh up to 100 g of the ground sample into a new 500-mL polyethylene bottle.

9.2. Nuclear counting.

9.2.1. Center the 500-mL sample bottles on the face of the Ge(Li) or HPGe detectors and accumulate a gamma-ray spectra for 10,000 s. Longer counting times may be used for samples of very low activity. Overnight counting (50,000 s) is the practical limit.

9.2.2. Transfer spectral data to the VAX for off-line data reduction. Record sample number, data file name, detector, matrix, and counting date in the Laboratory notebook provided. See count room Method No. CR400 for further information concerning data transfer of analysis.

10. Operation of Equipment

10.1. Refer to the operating manual for the gamma-ray spectrometer (see Method No. CR300).

11. Calculations

11.1. Calculate the concentration for each nuclide using the following formula:

$$R = \frac{(Cs - Cb)e^{-\lambda T}}{E \times CT \times Q} ,$$

where R = concentration of nuclide (pCi/L or pCi/g),
Cs = net counts in the nuclide's gamma-ray peak,
Cb = background counts in the same gamma region,
E = detector efficiency for the nuclide,
CT = count time (s),
Q = sample quantity (g or L),
λ = 0.693/(nuclide half-life in d), and
T = decay time (d).

11.2. Calculate the uncertainty in the nuclide result using the formula:

$$U = |R| \sqrt{\frac{Cs + Cb}{(Cs - Cb)^2} + SIGEFF^2} ,$$

where Cs = net counts in the nuclide's gamma-ray peak,
Cb = background counts in the same gamma region, and
SIGEFF = 0.15 (minimum reported uncertainty).

11.3. Isotope decay data are taken from the RADDECAY program. Use the correct reference date to decay NIST and Environmental Measurements Laboratory (EML) reference materials.

Sample No.	Decay Date
00.00502	01/01/75
00.00560	12/15/80
00.00640-42	04/01/80
00.00651	01/11/84
00.00742	09/09/81

12. Proper Waste Disposal Practices

12.1. Samples from this procedure are returned to Sample Management section.

13. Source Materials

13.1. E. S. Gladney, D. B. Curtis, D. R. Perrin, J. W. Owens, and W. E. Goode, "Nuclear Techniques for the Chemical Analysis of Environmental Materials," Los Alamos Scientific Laboratory report LA-8192-MS (1980).

13.2. M. A. Gautier, E. S. Gladney, and D. R. Perrin, "Quality Assurance for Health and Environmental Chemistry: 1984," Los Alamos National Laboratory report LA-10508-MS (November 1985).

13.3. D. Bowers, Grove Engineering, Radiation Shielding Information Center, Oak Ridge National Laboratory.

13.4. D. C. Kocher, "Radioactive Decay Data Tables," DOE/TIC-11026, Washington D.C., 1981.

Revisions or additions to the procedure are marked (). Where a section heading is marked, the entire section has been revised.

TABLE I. EFFICIENCY FACTORS FOR SOLUTIONS IN 25-ML GLASS SCINTILLATION VIALS (JUNE 1985)

Nuclide	Energy (keV)	Volume (mL)	Efficiency Factors Det #1	Det #2	Det #5	Det #6[a]
^{51}Cr	321	5	0.0118	0.0157	0.0118	0.0108
		10	0.0090	0.0124	0.0089	0.0082
^{60}Co	1173	10	—	0.0311	—	—
^{65}Zn	1115	5	0.0179	0.0156	0.0114	0.0111
		10	0.0139	0.0122	0.0089	0.0089
^{106}Ru	622	5	0.0051	0.0068	0.0051	0.0049
(^{106}Rh)		10	0.0041	0.0054	0.0041	0.0040
^{134}Cs	603	10	—	0.0510	—	—
^{137}Cs	661	10	—	0.0520	—	—

[a] Cap on.

TABLE II. EFFICIENCY FACTORS FOR SOLUTIONS IN 500-ML NALGENE WIDE-MOUTH POLYETHYLENE BOTTLES (MAY 1985)

Nuclide	Energy (keV)	Volume (mL)	Efficiency Factors Det #1	Det #2	Det #3	Det #6[a]
^{7}Be	477	50	0.0046	0.0064	0.0044	0.0048
		100	0.0035	0.0048	0.0034	0.0037
		200	0.0023	0.0031	0.0022	0.0025
		300	0.0017	0.0023	0.0016	0.0019
		400	0.0014	0.0019	0.0013	0.0015
		500	0.0011	0.0015	0.0011	0.0012
^{22}Na	1275	50	0.0151	0.0190	0.0141	0.0165
		100	0.0121	0.0152	0.0114	0.0133
		200	0.0086	0.0106	0.0079	0.0095
		300	0.0065	0.0081	0.0060	0.0073
		400	0.0052	0.0065	0.0049	0.0059
		500	0.0043	0.0053	0.0040	0.0049
^{51}Cr	321	50	0.0064	0.0091	0.0062	0.0065
		100	0.0048	0.0067	0.0047	0.0050
		200	0.0031	0.0043	0.0030	0.0033
		300	0.0023	0.0032	0.0022	0.0025
		400	0.0018	0.0025	0.0018	0.0020
		500	0.0015	0.0021	0.0014	0.0016
^{54}Mn	834	50	0.0261	0.0350	0.0248	0.0282
		100	0.0203	0.0295	0.0193	0.0220
		200	0.0137	0.0181	0.0129	0.0151
		300	0.0103	0.0135	0.0097	0.0114
		400	0.0082	0.0107	0.0077	0.0090
		500	0.0068	0.0087	0.0063	0.0075
^{57}Co	122	50	0.1231	0.1836	0.1072	—
		100	0.0919	—	0.0805	0.0917
		200	—	0.0862	—	—
		300	—	0.0638	0.0372	0.0431
		400	—	0.0497	0.0288	0.0331
		500	0.0266	0.0394	0.0233	0.0271

TABLE II. EFFICIENCY FACTORS FOR SOLUTIONS IN 500-ML NALGENE WIDE-MOUTH POLYETHYLENE BOTTLES (MAY 1985) (cont)

Nuclide	Energy (keV)	Volume (mL)	Efficiency Factors Det #1	Det #2	Det #5	Det #6[a]
^{57}Co	136	50	0.0145	0.0217	0.0130	0.0148
		100	0.0109	0.0162	0.0099	0.0111
		200	0.0070	0.0103	0.0064	0.0072
		300	0.0050	0.0077	0.0046	0.0051
		400	0.0039	0.0059	0.0036	0.0040
		500	0.0032	0.0048	0.0029	0.0033
^{60}Co	1173	50	0.0181	0.0234	0.0169	0.0193
		100	0.0141	0.0182	0.0133	0.0154
		200	0.0098	0.0125	0.0091	0.0108
		300	0.0074	0.0094	0.0069	0.0082
		400	0.0059	0.0075	0.0055	0.0066
		500	0.0049	0.0061	0.0045	0.0055
^{60}Co	1332	50	0.0159	0.0207	0.0150	0.0173
		100	0.0126	0.0162	0.0118	0.0138
		200	0.0087	0.0111	0.0081	0.0098
		300	0.0066	0.0084	0.0061	0.0074
		400	0.0053	0.0067	0.0049	0.0060
		500	0.0044	0.0055	0.0040	0.0049
^{65}Zn	1115	50	0.0103	0.0137	0.0097	0.0110
		100	0.0080	0.0105	0.0075	0.0087
		200	0.0054	0.0071	0.0051	0.0060
		300	0.0041	0.0053	0.0038	0.0046
		400	0.0032	0.0042	0.0030	0.0037
		500	0.0027	0.0034	0.0025	0.0030
^{106}Ru (^{106}Rh)	622	50	0.0030	0.0041	0.0029	0.0033
		100	0.0024	0.0032	0.0023	0.0026
		200	0.0017	0.0021	0.0016	0.0018
		300	0.0012	0.0016	0.0012	0.0013
		400	0.0010	0.0013	0.0009	0.0011
		500	0.0008	0.0010	0.0008	0.0009
^{131}I	364	500	—	0.0149	—	—

TABLE II. EFFICIENCY FACTORS FOR SOLUTIONS IN 500-ML NALGENE WIDE-MOUTH POLYETHYLENE BOTTLES (MAY 1985) (cont)

Nuclide	Energy (keV)	Volume (mL)	Efficiency Factors Det #1	Det #2	Det #5	Det #6[a]
^{134}Cs	603	50	0.0322	—	0.0304	0.0344
		100	0.0252	0.0331	0.0239	0.0270
		200	0.0172	0.0224	0.0163	0.0185
		300	0.0129	0.0169	0.0122	0.0141
		400	0.0101	0.0133	0.0095	0.0112
		500	0.0084	0.0110	0.0079	0.0092
^{134}Cs	795	50	0.0220	—	0.0210	0.0235
		100	0.0171	0.0224	0.0162	0.0185
		200	0.0118	0.0153	0.0110	0.0131
		300	0.0089	0.0115	0.0083	0.0098
		400	0.0071	0.0092	0.0066	0.0079
		500	0.0058	0.0075	0.0054	0.0065
^{137}Cs	661	50	0.0285	0.0388	0.0271	0.0320
		100	0.0220	0.0295	0.0209	0.0245
		200	0.0149	0.0197	0.0141	0.0162
		300	0.0111	0.0148	0.0105	0.0125
		400	0.0087	0.0116	0.0083	0.0080
		500	0.0071	0.0096	0.0069	0.0080

[a] Cap on.

TABLE III. EFFICIENCY FACTORS FOR SOLUTIONS IN MARINELLI BEAKERS (FEBRUARY 1986)

Nuclide	Energy (keV)	Volume (L)	Efficiency Factor Det #2
^{7}Be	477	1.0	0.0026
		3.8	0.0015
^{22}Na	1274	1.0	0.0086
		3.8	0.0047
^{51}Cr	321	1.0	0.0038
		3.8	0.0019
^{54}Mn	834	1.0	0.0140
		3.8	0.0072
^{57}Co	122	1.0	0.0656
		3.8	0.0054
^{60}Co	1173	1.0	0.0099
		3.8	0.0054
^{60}Co	1332	1.0	0.0088
		3.8	0.0048
^{65}Zn	1115	1.0	0.0057
		3.8	0.0029
^{106}Ru	622	1.0	0.0015
(^{106}Rh)		3.8	0.0008
^{131}I	364	1.0	0.0230
		3.8	0.0111
^{134}Cs	796	1.0	0.0131
		3.8	0.0070
^{137}Cs	662	1.0	0.0152
		3.8	0.0079

TABLE IV. EFFICIENCY FACTORS FOR SOILS IN 500-ML NALGENE WIDE-MOUTH POLYETHYLENE BOTTLES (DECEMBER 1985)

Nuclide	Energy (keV)	Weight (g)	Efficiency Factors Det #1	Det #2	Det #5	Det #6[a]
^{40}K	1461	50	0.0019	0.0023	0.0015	0.0010
		100	0.0018	—	—	—
^{137}Cs	662	100	0.0218	0.0304	0.0194	0.0245
^{241}Am	60	10	—	0.1343	—	0.0826
		20	—	0.1131	—	0.0725
		30	—	0.1056	—	0.0688
		40	—	0.1025	—	0.0661
		50	—	0.0927	—	0.0585
		60	—	0.0804	—	0.0522
		80	—	0.0723	—	0.0466
		100	—	0.0641	—	0.0414

[a] Cap on.

QUALITATIVE GAMMA-RAY SCAN OF ENVIRONMENTAL MATRICES

Analyte: Gamma-ray-emitting nuclides	**Method No.:** ER140
Matrices: All types	**Minimum Detectable Activity:** 0.5 cpm
Procedure: High-purity germanium (HPGe) gamma-ray spectrometry	**Accuracy and Precision:** Qualitative only
Effective Date: 07/26/90	**Authors:** George H. Brooks Ernest S. Gladney Daniel R. Perrin

SAFETY NOTE: Before beginning this procedure, read all of the Material Safety Data Sheets for the chemicals listed in Sec. 7. Read Sec. 4.3 of the EM-9 Safety Manual for information on personal protective clothing and equipment. Read Sec. 12 of this procedure for proper waste disposal practices.

1. Principle of Method

1.1. All environmental matrices that will fit into a 500-mL polyethylene bottle can be counted to qualitatively observe gamma-ray nuclides in the sample. Live snakes, lizards, and other animals have been assayed on this system.

2. Sensitivity

2.1. Approximately 0.5 cpm of gamma-emitting nuclides can be observed above the background for each detector. The absolute sensitivity varies somewhat among the detectors because of their individual physical properties.

3. Accuracy and Precision

3.1. This is a qualitative procedure and the accuracy is affected only by incorrect calibration of the spectrometer. Precision does not apply.

4. Interferences

4.1. None are known.

5. Collection and Storage of Samples

5.1. No special precautions are required. Submit samples in any of the following preapproved clean sample containers: 500-mL polyethylene bottles, standard AIRNET charcoal cartridges, or filters in the standard alpha/beta counting

configuration. There are some exceptions to these size constraints. Ask the count room manager whether a unique sample configuration can be accommodated.

5.2. Normal sample aliquots for a 500-mL polyethylene bottle are 100 g for soils and vegetation and 500 mL for waters. The charcoal cartridges and filters are standard units of 1 each. Any other matrix configuration may have specific requirements; ask the count room manager for additional information.

6. Apparatus

6.1. Gamma-ray spectrometer: equipped with large, high-resolution, high-efficiency, high-purity germanium (HPGe) detectors.

6.2. Polyethylene bottles: 500-mL, wide-mouth, screw-capped.

7. Reagents

7.1. None required.

8. Calibration and Standards

8.1. Each HPGe detector is multiplexed to a multichannel pulse height analyzer (PHA) and is individually energy calibrated using National Institute of Standards and Technology (NIST) Standard Reference Material (SRM) 4370-C, ^{152}Eu Radioactivity Solution Standard. Three-point calibration technique is used to achieve an energy calibration of approximately 1.0 keV per channel. This equates to 0-2000 keV in one-half memory (4096 channels).

8.2. Use the fine gain potentiometer on each linear amplifier to adjust the peak channel of the 779-keV ^{152}Eu gamma-ray line to channel 779 in the memory region of the analyzer for each detector.

8.3. Examine the location of the 122- and 1408-keV ^{152}Eu lines. Calculate the difference between the channel number and the location of the 1408 line. Adjust the dc level potentiometer for the number of channels (either plus or minus from the set channel) necessary to accommodate the change. Readjust the fine gain potentiometer so that the 779 line resides in the 779 channel. The system should now be set to a linear response within the 0-2 MeV range.

8.4. If the calibration is off by more than 5 channels, contact the count room manager and have the system properly calibrated.

9. Procedure

9.1. Manual counting.

9.1.1. Place a 500-mL polyethylene counting bottle (or any other approved matrix configuration) in the sample holding vessel. Place the vessel directly on the face of the HPGe detectors (counting caves 5 and 6 only).

9.1.2. Invoke the ADCAM program and set the preset counting time to 10,000 s. Begin counting the sample.

9.2. Automated counting.

9.2.1. Place the 500-mL polyethylene counting bottle (or any other approved matrix configuration) in the sample holding vessel. Place these sample vessels in the sample holding bays for each detector (detectors 7 and 11 only in caves 5 and 6).

9.2.2. Invoke the automated/robotics program on the PC by typing **MENU**. This will bring up the automated counting menu, from which the user can begin the sample loading, documentation, and counting procedures. Set the counting times to 10,000 s.

10. Operation of Equipment

10.1. See Method No. CR400 for operation of the gamma-ray spectrometer.

10.2. Robot operation. See the PRI/ADCAM manual for proper operation of the automated system.

11. Calculations

11.1. Calculations for both manual and automated count modes.

11.1.1. Invoke the multichannel analyzer (MCA) emulator on the PC. Call up the specific file(s) from storage using the **FILES** function, with the **RECALL** program. Perform a background subtraction (**STRIP**) with an appropriate background spectrum, using the **CALCULATE** function within the emulator.

11.1.2. Within the **CALCULATE** function, invoke the **PEAK SEARCH** function to identify possible peak centroids.

11.1.3. Invoke the **FILES** function. Initiate the **REPORT** function, whereby an appropriate report will be generated and sent to the printer. This report will give the program's "best estimate" of what the peak should

be. A report is shown in Fig. 1. The **REPORT** function also provides a variety of other information about the peak, such as its centroid, total counts within the peak, and a full-width-at-half-maximum (FWHM) determination. Check these reports of peak identification against any of the well known gamma-ray energy tables for inaccuracies that may be caused by the report generation program. See Source Materials 13.3, 13.4, or 13.5.

12. Proper Waste Disposal Practices

12.1. Return the samples to the Sample Management section for disposal when all results are complete.

13. Source Materials

13.1. E. S. Gladney, D. B. Curtis, D. R. Perrin, J. W. Owens, and W. E. Goode, "Nuclear Techniques for the Chemical Analysis of Environmental Materials," Los Alamos Scientific Laboratory report LA-8192-MS, pp. 55-89 (1980).

13.2. R. Gunnink, J. B. Niday, R. P. Anderson, and R. A. Meyer, "Gamma-Ray Energies and Intensities," Lawrence Radiation Laboratory, Livermore report UCID-15439 (1969).

13.3. *Table of Isotopes*, 7th ed., C. M. Lederer and V. S. Shirley, Eds., (John Wiley & Sons, Inc., New York, 1978).

13.4. W. W. Bowman and K. W. MacMurdo, "Radioactive-Decay Gammas, Ordered by Energy and Nuclide," *Atomic Data and Nuclear Data Tables* **13**, 89-292 (1974).

13.5. *Chart of the Nuclides*, 13th ed., F. W. Walker, D. G. Miller, and F. Feiner, Eds., (General Electric Company, San Jose, California, 1984).

Revisions or additions to the procedure are marked (▒▒▒). Where a section heading is marked, the entire section has been revised.

```
MCB # 1        ACQ 09-27-89  AT 17:00:08   RT : 10901.2    LT : 10000.0
               No detector description was entered
               soil standard, det#7, 0.418709uci tot act

ROI # 1-1      RANGE :   64 =   32.48keV  to   96 =   48.49keV
               AREA : Gross = 866633    Net = 333077      +/- 1426
               CENTROID : 77.35   =   39.16keV
               SHAPE : Fwhm =   6.37keV    Fwtm =  12.66keV

               ID : CS-137  at    36.40keV
               Corrected Rate = 53.310        +/- 0.14

ROI # 1-2      RANGE :  160 =   80.51keV  to  172 =   86.52keV
               AREA : Gross = 365581    Net = 8083        +/- 652
               CENTROID : 166.66  =   83.85keV
               SHAPE : Fwhm =   2.00keV    Fwtm =   3.10keV

               ID : NP-237  at    86.50keV
               Corrected Rate = 0.808         +/- 0.07

ROI # 1-3      RANGE :  236 =  118.54keV  to  248 =  124.54keV
               AREA : Gross = 2692592   Net = 2296622    +/- 1661
               CENTROID : 242.49  =  121.79keV
               SHAPE : Fwhm =   1.05keV    Fwtm =   2.11keV

               ID : EU-152  at   121.78keV
               Corrected Rate = 229.662       +/- 0.17

ROI # 1-4      RANGE :  289 =  145.06keV  to  301 =  151.06keV
               AREA : Gross = 236370    Net = 4488        +/- 524
               CENTROID : 294.96  =  148.04keV
               SHAPE : Fwhm =   1.70keV    Fwtm =   3.44keV

               ID : CE-141  at   145.44keV
               Corrected Rate = 0.449         +/- 0.05

ROI # 1-5      RANGE :  316 =  158.57keV  to  328 =  164.57keV
               AREA : Gross = 225447    Net = 1825        +/- 513
               CENTROID : 321.90  =  161.52keV
               SHAPE : Fwhm =   0.86keV    Fwtm =   3.13keV

               ID : BA-140  at   162.64keV
               Corrected Rate = 0.183         +/- 0.05
```

Fig. 1. ADCAM report.

PLUTONIUM IN ENVIRONMENTAL MATRICES — ALPHA SPECTROMETRY

Analyte: ^{238}Pu, $^{239+240}Pu$	**Method No.:** ER160
Matrix: Soils, water, air particulates, and biologicals	**Minimum Detectable Activity:** 0.02 pCi/sample
Procedure: Ion exchange and alpha spectrometry	**Accuracy and Precision:** See Step 3.1.
Effective Date: 01/01/84	**Authors:** Richard J. Peters Daryl Knab Wanita Eberhardt

SAFETY NOTE: Before beginning this procedure, read all of the Material Safety Data Sheets for the chemicals listed in Sec. 7. Read Sec. 4.3 of the EM-9 Safety Manual for additional information on personal protective clothing and equipment. Read Sec. 12 of this procedure and Source Material 13.8 for proper waste disposal practices.

1. Principle of Method

1.1. Environmental samples are wet or dry ashed. Plutonium is isolated by ion exchange and electrodeposited on stainless-steel planchets for alpha spectroscopy.

1.2. All samples are traced with either ^{242}Pu or ^{236}Pu before being wet ashed.

1.3. Americium-241 may also be determined on the same sample fraction if ^{243}Am tracer is added to the sample before wet ashing.

2. Sensitivity

2.1. Sensitivity is limited by the counter background.

2.2. For routine measurements with an 80,000-s counting period and a counting efficiency of 25%, the minimum detection limit (the 95th percentile of the background distribution) is 0.02 pCi per sample.

3. Accuracy and Precision

3.1. The National Institute for Standards and Technology (NIST), the Environmental Protection Agency, and the DOE Environmental Measurements Laboratory all produce and distribute certified reference materials for plutonium analysis in several matrices. We prepare in-house QC materials by pipetting known amounts of plutonium standards onto blank environmental materials. The mean

recoveries of plutonium in various matrices over a 3-year period are tabulated below (number of determinations in parentheses):

Matrix	% ^{238}Pu				% ^{239}Pu			
Biologicals	93	±	11	(6)	86	±	14	(19)
Filters	88	±	9	(21)	92	±	10	(27)
Silicates	95	±	30	(12)	110	±	20	(27)
Waters	90	±	12	(56)	95	±	13	(133)

4. Interferences

4.1. Interference is caused by alpha activity with energies in the range of 4.8 to 5.6 MeV.

5. Collection and Storage of Samples

5.1. Acidify water samples with 10 mL of concentrated HNO_3 in the field at the time of collection. Filter, spike with tracer(s), and reacidify samples within 24 h of receipt in the laboratory and before sample storage.

5.2. There are no special collection or storage requirements for environmental matrices.

6. Apparatus

6.1. Bottles: 500-mL, linear polyethylene, Nalgene.

6.2. Beakers: Teflon, 600-mL, flat-bottom.

6.3. Beakers: 100-, 250-, 400-, 600-, and 1000-mL, Pyrex.

6.4. Filters: 9-cm, glass-fiber, Whatman GF/A.

6.5. Filter funnels: glass, 75-mm.

6.6. Crucibles: 30-mL, platinum, with covers.

6.7. Ion-exchange columns: glass, typically around 197 mm long by 7 mm i.d. with a 100-mL reservoir at the top and a tip tapered to 2 mm i.d. (see Fig. 1).

6.8. Electrodeposition apparatus: equipped with a dc power supply to provide 1 A of regulated current to each electrolytic cell.

8.1.2. Prepare the soil standard by evaporating an aliquot of the stock solution on 100 g of blank soil under an infrared lamp. The solution must not contact the walls or bottom of the container. Thoroughly blend the dry standard with a stainless steel spatula and transfer it to a polyethylene bottle with the aid of a polyethylene powder funnel and a small brush.

8.2. Count an appropriate quality control material with each sample set to record detector system performance.

8.3. The liquid blank is 500 mL of distilled water and the soil blank is 100 g of washed deep-well sand.

8.3.1. Count the appropriate blank with each sample set. Use the data to calculate the background count of the counter.

9. Procedure

9.1. Soils.

9.1.1. Weigh 100 g of a dried soil sample into a polyethylene bottle.

9.1.2. Tightly cap the bottle and clean off any exterior contamination.

9.1.3. Place the sample into a plastic bag and insert it into the NaI[Tl] detector well.

9.1.4. Count the sample for 5 min.

9.1.5. Record the total counts and count time in minutes on the gross gamma analysis sheet accompanying the sample from the radiochemistry laboratory.

9.1.6. Count a soil quality control sample, a soil blank, and a soil standard for 5 min each. Record the counts of the quality control sample, blank sample, and soil standard on the gross gamma analysis sheet (Fig. 1).

9.2. Water.

9.2.1. Place 500 mL of a filtered water sample into a polyethylene bottle.

9.2.2. Proceed with Steps 9.1.2 through 9.1.5.

9.2.3. Count a water quality control sample, a water blank, and a water standard for 5 min each. Record the counts of the quality control sample, the blank sample, and the water standard on the gross gamma analysis sheet (Fig. 1).

10. Operation of Equipment

10.1. Check the EG&G Ortec Model No. 871 Timer/Counter parameters before each counting session. The timer display should read **5.0**, and the **Time Base** select light should read **Min**. Push the appropriate switches to modify the parameters to the correct setting. The counter display should read **Counter**. Use the Counter/Timer select switch to adjust to the correct setting.

10.2. The EG&G Ortec Model No. 459 Bias Supply should be set at 1000 V. If the bias supply is not at the correct setting, adjust the potentiometer to provide the correct voltage.

NOTE: If the voltage is incorrectly set, adjust to the correct voltage with increments no larger than 100 V/s.

11. Calculations

11.1. Calculations of radiometric counting data for determinations are made without a radiotracer. Most data values are assumed to have Poisson distributions and all time-measurement errors are assumed to be insignificant.

11.2. Counting efficiency.

11.2.1. The counting efficiency of the counter for a single standard run is calculated using the following equation:

$$E = \frac{\left(\frac{C_s}{T_s} - \overline{B}\right)}{A_s} ,$$

where E = efficiency (counts per disintegration),
C_s = gross counts for the standards,
T_s = counting time for standard (min),
$\overline{B}$ = average background count rate, and
A_s = activity of the standard (dpm).

11.2.2. The average counter efficiency is calculated from a running average of the last n values of individual E determinations using the following equation:

$$\overline{E} = \frac{\sum_{i=1}^{n} E_i}{n} ,$$

where $\overline{E}$ = the running average of the counting efficiency,
E_i = the individual counting efficiencies from Step 11.2.1, and
n = the number of measurements used for calculation.

11.2.3. The standard deviation of $\overline{E}$ is calculated as follows:

$$SD(\overline{E}) = \overline{E} \times \sqrt{\frac{\sum_{i=1}^{n} (E_i - \overline{E})^2}{(n-1)\, n\, \overline{E}^{\,2}} + \frac{(\sigma_{A_s})^2}{A_s^{\,2}}} ,$$

where $SD(\overline{E})$ = standard deviation of the average efficiency,
$\overline{E}$ = average efficiency (counts per disintegration) from Step 11.2.2,
E_i = individual efficiencies from Step 11.2.1,
n = number of values of E used,
A_s = activity of the standard (dpm), and
σA_s = stated standard deviation associated with the known value of A_s.

11.2.4. The standard deviation of an individual E is calculated as follows:

$$SD(E) = E \times \sqrt{\frac{\frac{C_s}{T_s^{\,2}} + \frac{C_b}{T_b^{\,2}}}{\left(\frac{C_s}{T_s} - \frac{C_b}{T_b}\right)^2} + \frac{(\sigma_{A_s})^2}{A_s^{\,2}}} ,$$

where $SD(E)$ = standard deviation of E (counts per disintegration),
E = counting efficiency from Step 11.2.1,
C_s = gross counts for the standard,
T_s = counting time for the standard,
C_b = gross counts for the background,
T_b = counting time for the background (min),
A_s = activity of the standard (dpm), and
σA_s = standard deviation of standard activity.

11.3. Background.

11.3.1. The background count rate is calculated as follows:

$$B = \frac{C_b}{T_b} ,$$

where B = background count rate (cpm),
C_b = gross counts of background, and
T_b = counting time of the background (min).

11.3.2. A running average of the background count rate is calculated using the following equation:

$$\overline{B} = \frac{\sum_{i=1}^{n} B}{n} ,$$

where $\overline{B}$ = average background count rate,
B = background count rate, and
n = number of values used.

11.3.3. The standard deviation of the average background count rate is calculated using the following equation:

$$SD(\overline{B}) = \overline{B} \times \sqrt{\frac{\sum_{i=1}^{n} (B - \overline{B})^2}{(n-1) \times n \times \overline{B}^2}} ,$$

where $SD(\overline{B})$ = standard deviation of the running average of the background,
$\overline{B}$ = average background from Step 11.3.2,
B = individual background count rate, and
n = number of values used.

11.4. Sample activity.

11.4.1. The activity in the samples is calculated as follows:

$$A_x = \frac{\left(\frac{C_x}{T_x} - \overline{B}\right)}{\overline{E}} ,$$

where A_x = sample activity (dpm),
C_x = gross counts for the sample,
T_x = counting time for the sample (min),
$\overline{B}$ = average background count rate (cpm), and
$\overline{E}$ = average counting efficiency.

11.4.2. The standard deviation of the activity in the sample is calculated as follows:

$$SD\ (A_x) = |A_x| \times \sqrt{\frac{\frac{C_x}{T_x^2}}{\left(\frac{C_x}{T_x} - \overline{B}\right)^2}} ,$$

where $SD\ (A_x)$ = standard deviation of sample activity (dpm),
$|A_x|$ = absolute value of A_x from Step 11.4.1,
C_x = gross counts of sample,
T_x = sample counting time, and
$\overline{B}$ = average background count rate.

11.4.3. The minimum detectable activity for high-background instruments is determined to be three times the standard deviation of the background.

$$MDA = \frac{3 \times SD\ (B)}{K} ,$$

where MDA = minimum detectable activity (dpm),
SD (B) = standard deviation of the background count rate (cpm), and
K = constant in sample units.

11.5. Calculation to put the radiometric measurement into the required form for final reporting.

11.5.1. The reported activity is calculated as follows:

$$R_x = \frac{A_x}{K \times Q} ,$$

where R_x = sample activity in correct units for reporting (pCi/L),
A_x = sample activity (dpm),
K = conversion factor (2.22 pCi/dpm), and
Q = sample quantity analyzed (0.5 L or 100 g).

11.5.2. The propagated uncertainty of the reported activity is calculated using the following equation:

$$U_x = |R_x| \times \sqrt{SD\,(A_x)^2 + SD\,(\overline{B})^2 + SD\,(\overline{E})^2 + \frac{SD\,(Q)^2}{Q^2}} ,$$

where U_x = propagated uncertainty of the reported activity,
$|R_x|$ = absolute value of the reported activity,
$SD(A_x)$ = standard deviation of sample activity,
$SD(\overline{B})$ = standard deviation of the average background,
$SD(\overline{E})$ = standard deviation of the average efficiency,
$SD(Q)$ = standard deviation of the sample quantity aliquoted, and
Q = sample quantity aliquoted in reporting units.

12. Source Materials

12.1. M. A. Gautier, E. S. Gladney, and B. T. O'Malley, "Quality Assurance for Health and Environmental Chemistry: 1985," Los Alamos National Laboratory report LA-10813-MS (1986).

12.2. "American National Standard for Performance Criteria for Radiobioassay," draft, American National Standards Institute, ANSI N13.30 (1989).

12.3. L. A. Currie, "Limits for Qualitative Detection and Quantitative Determination," *Analytical Chemistry* **40**, 586-593 (1968).

ANALYSIS _____ ANALYST _____ DATE _____

SAMPLE NO.	REQUEST NO.	OWNER	WEIGHT OR VOLUME	RESIDUE WEIGHT	SAMPLE TYPE	GROSS COUNTS

Fig. 1. Gross gamma analysis data sheet.

PLUTONIUM IN ENVIRONMENTAL MATRICES — ALPHA SPECTROMETRY

Analyte: ^{238}Pu, $^{239+240}Pu$	**Method No.:** ER160
Matrix: Soils, water, air particulates, and biologicals	**Minimum Detectable Activity:** 0.02 pCi/sample
Procedure: Ion exchange and alpha spectrometry	**Accuracy and Precision:** See Step 3.1.
Effective Date: 01/01/84	**Authors:** Richard J. Peters Daryl Knab Wanita Eberhardt

SAFETY NOTE: Before beginning this procedure, read all of the Material Safety Data Sheets for the chemicals listed in Sec. 7. Read Sec. 4.3 of the EM-9 Safety Manual for additional information on personal protective clothing and equipment.

1. Principle of Method

1.1. Environmental samples are wet or dry ashed. Plutonium is isolated by ion exchange and electrodeposited on stainless steel planchets for alpha spectroscopy.

1.2. All samples are traced with either ^{242}Pu or ^{236}Pu prior to wet ashing.

1.3. Americium-241 may also be determined on the same sample fraction if ^{243}Am tracer is added to the sample prior to wet ashing.

2. Sensitivity

2.1. Sensitivity is limited by the counter background.

2.2. For routine measurements with an 80,000-s counting period and a counting efficiency of 25%, the minimum detection limit (the 95th percentile of the background distribution) is 0.02 pCi per sample.

3. Accuracy and Precision

3.1. The National Bureau of Standards, the Environmental Protection Agency, and the DOE Environmental Measurements Laboratory all produce and distribute certified reference materials for plutonium analysis in several matrices. We prepare in-house QC materials by pipetting known amounts of plutonium standards onto blank environmental materials. The mean recoveries of

plutonium in various matrices over a 3-year period are tabulated below (number of determinations in parentheses):

Matrix	% ^{238}Pu				% ^{239}Pu			
Biologicals	93	±	11	(6)	86	±	14	(19)
Filters	88	±	9	(21)	92	±	10	(27)
Silicates	95	±	30	(12)	110	±	20	(27)
Waters	90	±	12	(56)	95	±	13	(133)

4. Interferences

4.1. Interference is caused by alpha activity with energies in the range of 4.8 to 5.6 MeV.

5. Collection and Storage of Samples

5.1. Acidify water samples with 10 mL of concentrated HNO_3 in the field at the time of collection. Filter, spike with tracer(s), and reacidify samples within 24 h of receipt in the laboratory and before sample storage.

5.2. There are no special collection or storage requirements for environmental matrices.

6. Apparatus

6.1. Bottles: 500-mL, linear polyethylene, Nalgene.

6.2. Beakers: Teflon, 600-mL, flat-bottom.

6.3. Beakers: 100-, 250-, 400-, 600-, and 1000-mL, Pyrex.

6.4. Filters: 9-cm, glass fiber, Whatman GF/A.

6.5. Filter funnels: glass, 75-mm.

6.6. Crucibles: 30-mL, platinum, with covers.

6.7. Ion exchange columns: glass, typically around 197 mm long by 7 mm i.d. with a 100-mL reservoir at the top and a tip tapered to 2 mm i.d. (see Fig. 1).

6.8. Electrodeposition apparatus: equipped with a dc power supply to provide 1 A of regulated current to each electrolytic cell.

6.9. Electrolytic cell: glass cell body 2.22-cm-o.d. by 1.9-cm-i.d., 5.2-cm-long.

6.9. Electrolytic cell: glass cell body 2.22-cm-o.d. by 1.9-cm-i.d., 5.2 cm long.

6.9.1. The 2.22-cm-diam stainless-steel plate is held in place on one end of the glass cell body by a rubber band created by removing approximately 1.5 cm of the closed end of a rubber finger cot and cutting a 0.5-cm hole in it. This band is stretched over the plate and up onto the glass cell body, holding the plate tightly in place with a liquid-tight seal.

6.9.2. A platinum electrode of 1.9-cm diam is press-fitted into the top of the glass cell body.

6.10. Alpha spectrometer: equipped with a 1024-channel analyzer using 300-mm^2 silicon-surface barrier detectors.

6.11. Proportional counter: 2-pi, windowless, gas-flow.

6.12. Hot plates: magnetic stirring, Corning model no. PC-351.

6.13. Stainless-steel disks: 1.59-cm (5/8-in.) disk fabricated from 15- to 20-mil 316 stainless steel, cold-rolled or No. 4 finish.

6.14. Stirring bars: 1.5-in., Teflon-coated.

6.15. Fume hood.

6.16. Glass wool.

6.17. Plastic wrap: 5-mil polyvinyl chloride film.

6.18. Graduated cylinders: 10-, 100-, and 500-mL.

6.19. Pipettes: 1-mL.

6.20. Eyedroppers: disposable, glass.

6.21. Ashing oven.

6.22. Muffle furnace.

6.23. Wash bottles: 1-L, polyethylene.

7. Reagents

7.1. Tracers.

7.1.1. Plutonium-242 tracer (99.98% isotopic purity). Dilute to 10 dpm/mL. Lawrence Livermore National Laboratory, Radiochemistry Division.

7.1.2. Plutonium-236 tracer (approximately 98% purity). Dilute to 10 dpm/mL. Oak Ridge National Laboratory, Isotope Sales Department.

7.1.3. Americium-243 tracer (99.9% isotopic purity). Dilute to 10 dpm/mL. Lawrence Livermore National Laboratory, Radiochemistry Division.

7.2. Hydrogen peroxide (30% solution).

7.3. Anion exchange resin. AG-1X4, 50-100 mesh, chloride form. Bio-Rad Laboratories, Richmond, CA.

7.4. Nitric acid (concentrated, reagent-grade).

7.5. Nitric acid (7.2 M). Dilute 2750 mL of concentrated HNO_3 with distilled water to a total volume of 6000 mL.

7.6. Hydrofluoric acid (concentrated, 48%, reagent-grade).

7.7. Boric acid (crystalline).

7.8. Boric acid (saturated). Add enough H_3BO_3 crystals (approximately 6 g at room temperature) to 100 mL of distilled water so that some of the crystals remain undissolved.

7.9. Sodium nitrite (1 M). Dissolve 69 g of crystalline $NaNO_2$ in 1000 mL distilled water.

7.10. Hydrochloric acid (concentrated, reagent-grade).

7.11. Hydrochloric acid (8 M). Dilute 1333 mL of concentrated HCl with distilled water to a total volume of 2000 mL.

7.12. Hydrochloric acid (1 M). Dilute 500 mL of concentrated HCl with distilled water to a total volume of 6000 mL.

7.13. Hydrochloric acid (0.1 M). Dilute 8 mL of concentrated HCl with distilled water to a total volume of 1000 mL.

7.14. Ammonium iodide (analytical reagent-grade).

7.15. Hydrochloric acid • sodium iodide solution (1 M). Dissolve 2 g of NaI in 2000 mL of 1 M HCl. This solution will process 24 columns. Prepare fresh before each use.

7.16. Ammonium oxalate (4%). Dissolve 40 g of ammonium oxalate crystals in 1000 mL of distilled water. This solution is stable for one month.

7.17. Methyl alcohol.

7.18. Ammonium hydroxide (1%). Dilute 15 mL of concentrated NH_4OH with distilled water to a total volume of 500 mL.

8. Calibration and Standards

8.1. All samples are traced with ^{243}Am and ^{242}Pu tracer solutions that have been standardized by electrodeposition and gross alpha counting. The values for the plutonium tracers are cross-checked yearly by tracing with a certified secondary ^{239}Pu solution and alpha counting.

8.2. Calibration of the alpha spectrometer.

8.2.1. The alpha secondary standard (No. 5) contains the isotopes ^{238}Pu, ^{239}Pu, and ^{242}Pu and is standardized in a gas-flow proportional counter using the NIST Standard Reference Material (SRM) 4906-B17, the ^{238}Pu primary standard.

8.2.2. Calibration counts are made for 1020 s. The efficiency of each detector is determined by integrating the counts in 20 channels (13 channels to the left of the peak and 6 channels to the right of the peak) of the energy spectrum of each of the three isotopes.

8.2.3. Background counts are accumulated for each energy spectrum for each detector for 60,000 s.

9. Procedure

9.1. Sample preparation.

9.1.1. Soil dissolution.

9.1.1.1. Weigh a 10-g aliquot of a dry soil sample into a 500-mL polyethylene bottle.

9.1.1.2. Add 1.00 mL of appropriate tracer(s) to the sample.

9.1.1.3. **Carefully** add approximately 300 mL of concentrated HNO_3. Carbonate soils can react vigorously. Add 200 mL of 48% HF.

CAUTION: HF is extremely hazardous. Wear rubber gloves, eye protection, and a lab coat. Completely clean up all spills and wash thoroughly after using HF. Make all HF transfers in an exhaust fume hood to avoid toxic fumes.

9.1.1.4. Place a 1.5-in. Teflon-coated stirring bar in the bottle and cap loosely. The cap must be loose enough to permit generated gases (principally SiF_4 and nitrous oxides) to escape to prevent pressure buildup.

9.1.1.5. Place the bottle in a hot water bath on a magnetic stirring hot plate and stir the sample overnight while heating. Cover the bottle and beaker with plastic wrap to keep the water from evaporating from the water bath.

NOTE: A 1-L beaker on a Corning model PC-351 hot plate set at "2" can be left unattended for 15 h (overnight).

9.1.1.6. Allow the mixture to settle for 10 min and decant into a 600-mL Teflon beaker.

9.1.1.7. A second leach with HF or HF • HNO_3 may be needed if large quartz crystals are present. Finely suspended material generally will be dissolved in the subsequent boildown. Large amounts of certain mineral crystals, like magnetite, zircons, etc., may require special treatment.

9.1.1.8. Evaporate the mixture to dryness.

9.1.1.9. Add approximately 200 mL of concentrated HCl and 5 g of H_3BO_3 to the polyethylene bottles containing the soil residue. Cap the bottles and shake well.

9.1.1.10. Pour the HCl • H_3BO_3 mixture into the Teflon beaker. Rinse the bottle with a little distilled water and transfer the water rinse to the Teflon beaker. Retrieve the stirring bar and discard the bottle.

9.1.1.11. Heat the mixture in the Teflon beaker until approximately 10 mL remains. Add approximately 100 mL of concentrated HNO_3 and boil to remove the HCl.

9.1.1.12. **Cautiously** add 30% H_2O_2 a few drops at a time from a squeeze bottle to oxidize any organic residues. Continue adding HNO_3 and H_2O_2 until the solution is light yellow and clear.

9.1.1.13. Evaporate the solution until the first salts appear.

9.1.1.14. Dissolve the residue in 100 mL of 7.2 M HNO_3. Add 1 g of H_3BO_3 and allow the solution to cool.

9.1.1.15. Filter the solution through a Whatman GF/A glass-fiber filter into a 600-mL glass beaker.

9.1.1.16. Wash the residue on the filter (mainly excess H_3BO_3) with enough 7.2 M HNO_3 to give a final volume (filtrate plus washings) of 200 mL.

NOTE: For samples that requrie total uranium by kinetic phosphorimetric analysis, transfer a 1% aliquot of this solution into a plastic centrifuge tube.

9.1.1.17. Cover the beaker with plastic wrap until ready for ion-exchange separation.

9.1.2. Water samples.

9.1.2.1. Measure a 500-mL aliquot of the water sample into a 600-mL Pyrex beaker.

9.1.2.2. Add 1.00 mL of the appropriate tracer(s).

9.1.2.3. Add 10 mL of concentrated HNO_3 and evaporate the solution to dryness.

NOTE: A 1-L beaker on a Corning Model PC-351 hot plate set at "2" can be left unattended for 15 h (overnight).

9.1.2.4. Add 10 mL of concentrated HNO_3 and heat to boiling. When the sample begins steaming, **Carefully** add 6 drops of 48% HF while swirling the sample. Evaporate to dryness.

CAUTION: HF is extremely hazardous. Wear rubber gloves, eye protection, and a lab coat. Completely clean up all spills and wash thoroughly after using HF. Make all HF transfers in an exhaust fume hood to avoid toxic fumes.

9.1.2.5. Carefully wash down the sides of the beaker with about 10 mL of concentrated HNO_3.

9.1.2.6. While heating the sample, add 30% H_2O_2 by drops to decompose any organic material. Repeated additions of concentrated HNO_3 and of H_2O_2 may be required to completely ash some samples. The wet ashing is complete when the residue is white or very light yellow, and dry.

9.1.2.7. Dissolve the residue in approximately 20 mL of concentrated HNO_3, carefully washing down the sides of the beaker.

9.1.2.8. Add 5 mL of concentrated HCl to the beaker and evaporate to approximately 10 mL. Remove the beaker from the hot plate and cool.

9.1.2.9. Add 100 mL of 7.2 M HNO_3 and 1 mL of saturated H_3BO_3 solution to the sample.

9.1.2.10. Cover the beaker with plastic wrap and store until ready for ion-exchange separation.

9.1.3. Vegetation dissolution.

9.1.3.1. Large samples are dried at 60°C in tared glass beakers (up to 4 L) until a constant weight is obtained on successive days.

9.1.3.2. Add 50 mL of distilled water to the beaker. Cover with perforated aluminum foil. Ash at 100-200°C for 8 h.

9.1.3.3. Ash at 300°C overnight.

9.1.3.4. Ash at 400°C for 8 h.

9.1.3.5. Ash at 500°C until the sample ash is completely white.

9.1.3.6. Cool and weigh the sample. Record the ash weight.

9.1.3.7. Repeat Steps 9.1.3.5 and 9.1.3.6 until a constant weight is achieved.

NOTE: The entire ash sample is frequently transferred to a 500-mL polyethylene bottle for gamma-emitting radionuclide analysis using Ge(Li) gamma-ray spectroscopy.

9.1.3.8. Dissolve the entire sample (up to 10 g) in approximately 200 mL of HNO_3. Add 1.00 mL of tracer(s) solution before continuing the dissolution.

9.1.3.9. Heat the sample on a hot plate and add 30% H_2O_2 in small amounts until the sample dries to a clear residue. The color may vary from pure white to deep lilac.

NOTE: Attention to the temperature is important because samples can bump violently if too hot.

9.1.3.10. Dissolve the residue in a mixture of 50 mL of concentrated HNO_3 and 25 mL of concentrated HCl. Boil to approximately 25 mL to remove the HCl.

9.1.3.11. Remove the sample from the hot plate and cool. Dilute to 100 mL with 7.2 N HNO_3. Let the sample stand overnight.

9.1.3.12. Filter the sample through a Whatman No. 42 filter paper. Rinse the beaker with 7.2 N HNO_3 to transfer all residue onto the filter paper. Save the filtrate for Step 9.1.3.17.

9.1.3.13. Return the filter paper and the residue to a 200-mL Teflon beaker. Add 100 mL of concentrated HF and 100 mL of concentrated HNO_3. Evaporate to dryness overnight on a hot plate set on low.

9.1.3.14. Dissolve the residue in 50 mL of concentrated HNO_3 and treat with 30% H_2O_2 as in Step 9.1.3.9.

9.1.3.15. Dissolve the residue in a mixture of 50 mL of concentrated HNO_3 and 25 mL of concentrated HCl. Boil to approximately 25 mL (all HCl is expelled). Add 5 g H_3BO_3.

9.1.3.16. Cool the sample and dilute to 100 mL with 7.2 N HNO_3. Let the sample stand overnight.

9.1.3.17. Filter the sample through a Whatman GF/A glass-fiber filter into the beaker containing the filtrate from Step 9.1.3.12. Wash the filter to give a final volume (filtrate plus washings) of 300 mL.

9.1.3.18. Cover the beaker with plastic wrap until ready for ion-exchange separation.

9.1.4. Tissue dissolution (including bone).

9.1.4.1. Weigh a 10-g aliquot of wet soft tissue or bone, excluding feathers and hide, into a 600-mL glass beaker.

9.1.4.2. Add 1.00 mL of the appropriate tracer(s).

9.1.4.3. Wet-ash the sample with concentrated HNO_3 and 30% H_2O_2 until a clear or light yellow solution is obtained.

NOTE: Do not use HF because CaF_2 will precipitate.

9.1.4.4. Evaporate the solution until just dry.

9.1.4.5. Continue the procedure for water samples from Step 9.1.2.7 to 9.1.2.10.

9.1.5. Filter dissolution (air-particulate, industrial hygiene swipe).

9.1.5.1. Place the air-particulate filter in a 30-mL platinum crucible.

9.1.5.2. Record the crucible and sample number.

9.1.5.3. Place the crucible in a cold muffle furnace. Turn the furnace to 500°C and dry-ash for 4 h. Turn the furnace off and remove the crucible. Allow to cool for 0.5 h.

9.1.5.4. Ashing will not be complete if glass-fiber filters are used. After cooling, add 5 to 10 mL of concentrated HF a few drops at a time. Cover the crucible with a platinum lid.

9.1.5.5. Evaporate the sample to dryness on medium heat.

9.1.5.6. Repeat Steps 9.1.5.4 and 9.1.5.5. Remove the sample from the hot plate and allow to cool.

9.1.5.7. Carefully wash down the cover and sides of the crucible with approximately 5 mL of concentrated HNO_3.

9.1.5.8. **Cautiously** add 1-2 drops 30% H_2O_2 to the crucible. When the vigorous reaction subsides, repeat the addition of H_2O_2 until the solution is clear or straw-colored.

9.1.5.9. Evaporate the solution in the crucible to approximately 1 mL.

9.1.5.10. Add 2 mL of saturated H_3BO_3 solution and heat to dissolve the sample.

9.1.5.11. Transfer the sample to a **new** 250-mL beaker using approximately 10 mL of concentrated HNO_3. Add 5 mL of concentrated HNO_3 to the platinum crucible. Repeat Steps 9.1.5.10 and 9.1.5.11 once.

9.1.5.12. Add the appropriate tracer(s) and 10 mL of concentrated HCl to the sample. Boil down the solution to approximately 5 mL. Add tracer(s) at this step, for two reasons: (1) platinum crucibles are dissolved by the HCl in the tracer solution, and (2) the polystyrene filters usually submitted are

hydrophobic. Addition of tracer at this time introduces a consistent low bias in our data of about 5-7%.

9.1.5.13. Add enough 7.2 M HNO_3 to bring the sample to approximately 100 mL.

9.1.5.14. Cover the sample and store until ready for ion-exchange separation.

9.2. Ion-exchange separation.

9.2.1. Add 1 mL of 1 M $NaNO_2$ solution per 100 mL of sample solution to the sample and mix thoroughly. Allow the sample to stand at room temperature for approximately 1 h.

9.2.2. Prepare a slurry of anion-exchange resin with distilled water. Transfer the resin to a 1-L polyethylene wash bottle and fill with distilled water.

9.2.3. Anion-exchange column preparation.

9.2.3.1. Pack a small glass wool plug tightly into the tip of the ion exchange tube, filling only the tapered tip.

9.2.3.2. Transfer the resin slurry into the ion-exchange tube until the settled resin bed reaches **just to the bottom** of the reservoir. Use distilled water from a wash bottle when transferring the resin slurry to prevent air bubbles from forming in the resin.

9.2.3.3. Place a 600-mL glass beaker, 400-mL for Am fraction, under the column. Wash the resin bed with three 20-mL aliquots of 7.2 M HNO_3. The final wash should be done with a wash bottle making sure **all** resin is washed from the reservoir into the column proper.

9.2.3.4. Gently place a glass wool plug on top of the column to contain the resin while part of the third 20-mL aliquot of 7.2 M HNO_3 remains in the reservoir.

9.2.4. Pour the sample solution through the resin column, keeping the reservoir filled with approximately 40 mL of solution.

9.2.4.1. If the ^{241}Am content of the sample is also to be determined, save the recovered sample solution from Step 9.2.4 and the first 20-mL aliquot of 7.2 M HNO_3 wash **only**.

9.2.4.2. Store this solution for future analysis using the americium procedure, Method No. ER120, Step 9.2.1. The sample must have been traced with ^{243}Am in addition to one of the plutonium tracers.

9.2.5. Wash the beaker twice with 20 mL of 7.2 M HNO_3, passing the wash through the column. Wash the column with two 40-mL aliquots of 7.2 M HNO_3.

9.2.6. Wash the column with two 20-mL aliquots of 8 M HCl. Allow each aliquot to drain to the top of the glass wool plug. Retain the washes in a beaker.

9.2.7. Elute the plutonium from the column into a **new** 100-mL beaker with four 20-mL aliquots of a **freshly** prepared solution containing 1 g/L of NH_4I in 1 M HCl.

9.2.8. Cover the beaker with plastic wrap and store until ready for electrodeposition.

9.3. Electrodeposition preparation.

9.3.1. Add 1 mL of concentrated HNO_3 to the 80-mL plutonium eluate and evaporate to dryness. The solution may be evaporated on a hot plate set on low and left overnight.

9.3.2. Add 1 mL of concentrated HNO_3 and 5 mL of concentrated HCl to the residue and evaporate until **just** dry. Let the last few drops air dry (remove from the hot plate) to avoid baking the sample. A high percentage of the sample is lost if baked. Repeat this step if a visible residue remains.

9.3.3. Add 5 mL of concentrated HCl and evaporate using low heat until the first dry spots appear. Avoid baking the sample.

9.3.4. Wash down the sides of the beaker with approximately 5 mL of concentrated HCl.

9.3.5. Cover the sample with plastic wrap. Store for at least 24 h.

9.4. Electrodeposition.

9.4.1. Evaporate the sample solution on medium heat until a dry spot appears that cannot be covered by swirling the beaker. Allow the beaker to cool.

9.4.2. Electrodeposition cell preparation.

9.4.2.1. Clean a stainless-steel planchet with methyl alcohol.

9.4.2.2. Engrave the sample number on the back of the planchet.

9.4.2.3. Place the planchet on the bottom of an electrodeposition tower and hold in place with a rubber gasket. Rinse the cell with distilled water to check for leaks.

9.4.3. Add 3 mL of 4% ammonium oxalate solution to the beaker. Transfer this solution to an electrodeposition cell with 0.1 M HCl until the cell is approximately half filled.

9.4.4. Allow the current to flow for 30 min at 1 A.

9.4.5. While the current is still on, quench the reaction by filling the cell with 1% NH_4OH solution. Remove the cell from the electrodeposition apparatus.

9.4.6. Empty the cell and rinse the stainless-steel planchet with water followed by a rinse with methyl alcohol into the original beaker.

9.4.7. Heat the planchet to a dull red color in the flame of a bunsen burner.

9.4.8. Allow the planchet to cool, place in a labeled envelope, and submit for alpha counting.

10. Operation of Equipment

10.1. Refer to the operating manual for the alpha spectrometer and count room Method No. CR100.

11. Calculations

11.1. Count samples for 80,000 s. Determine the counts for each of the three isotopes by integrating the counts in 20 channels for each energy region.

11.2. Counting efficiency determination for ^{238}Pu, ^{239}Pu, ^{242}Pu. The efficiencies are determined independently, but using the same equations.

11.2.1. Counting efficiencies for the tracer peak (E_t) and the analyte peak (E_x) will be calculated separately, using the same equations. The counting efficiency of the counter for a standard run is given by

$$E = \frac{\left(\frac{C_s}{T_s} - \overline{B}_s\right)}{A_s} ,$$

where E = counting efficiency in the peak of interest (counts per disintegration),
C_s = gross counts for the standard,
T_s = counting time for the standard (min),
$\overline{B}_s$ = average background count rate in the peak of interest, and
A_s = activity of the standard (dpm).

11.2.2. The average counter efficiency is calculated from a running average of the last n values of individual E determination:

$$\overline{E} = \frac{\sum_{i=1}^{n} E_i}{n} ,$$

where $\overline{E}$ = the running average of the counting efficiency,
E_i = the individual counting efficiencies from Step 11.2.1, and
n = the number of measurements used for calculation.

11.2.3. The standard deviation of $\overline{E}$ is

$$SD(\overline{E}) = \overline{E} \times \sqrt{\frac{\sum_{i=1}^{n} (E_i - \overline{E})^2 + SD(\overline{B}_s)^2}{(n-1)\, n\, \overline{E}^2} + \frac{(\sigma_{A_s})^2}{A_s^2}} ,$$

where $SD(\overline{E})$ = standard deviation of the average efficiency,
$\overline{E}$ = average efficiency (counts per disintegration) from Step 11.2.2,
E_i = individual efficiencies from Step 11.2.1,
$SD(\overline{B}_s)$ = standard deviation of the average background in the peak of interest,
n = number of values of E used,
A_s = activity of the standard (dpm), and
σ_{A_s} = stated standard deviation associated with the known value of A_s.

11.2.4. The standard deviation of an individual E is

$$SD\ (E) = E \times \sqrt{\frac{\frac{C_s}{T_s^2} + \frac{C_{bs}}{T_{bs}^2}}{\left(\frac{C_s}{T_s} - \frac{C_{bs}}{T_{bs}}\right)^2} + \frac{(\sigma_{A_s})^2}{A_s^2}} ,$$

where SD (E) = standard deviation of E (counts per disintegration),
E = counting efficiency from Step 11.2.1,
C_s = gross counts for the standard,
T_s = counting time for the standard,
C_{bs} = gross counts for the background,
T_{bs} = counting time for the background,
A_s = activity of the standard, and
σ_{A_s} = standard deviation of standard activity.

11.3. Background determination. There will be different backgrounds for the tracer (B_t) and the analyte (B_x) peaks, but the calculations will be the same.

11.3.1. The background count rate is

$$B = \frac{C_b}{T_b} ,$$

where B = background count rate (cpm),
C_b = gross counts for the background, and
T_b = counting time for the background (min).

11.3.2. A running average background count rate is calculated by

$$\overline{B} = \frac{\sum_{i=1}^{n} B}{n} ,$$

where $\overline{B}$ = average background count rate,
B = background count rate, and
n = number of values used.

11.3.3. The standard deviation of the average background count rate is calculated by

$$SD(\overline{B}) = \overline{B} \times \sqrt{\frac{\sum_{i=1}^{n} (B - \overline{B})^2}{(n - 1)}} ,$$

where $SD(\overline{B})$ = standard deviation of the running average of the background,
$\overline{B}$ = average background from Step 11.3.2,
B = individual background count rate, and
n = number of values used.

11.3.4. The minimum detectable activity for low-background instruments is determined by

$$MDA = \frac{(4.65 \times SD(B_x)) + 3}{K \times T_x} ,$$

where MDA = minimum detectable activity (dpm),
$SD(B_x)$ = standard deviation of the background count rate (cpm),
K = constant in sample units,
T_x = counting time,
4.65 = constant, and
3 = constant.

11.4 Tracer recovery.

11.4.1. The tracer recovery is calculated from:

$$R_t = \frac{C_t}{T_t \times E_t \times A_t} ,$$

where R_t = fraction of the tracer recovered,
C_t = total counts in the tracer peak,
T_t = counting time for the tracer (min),
E_t = counting efficiency for the tracer peak, and
A_t = activity of tracer added to the sample (dpm).

11.4.2. The standard deviation of the tracer recovery is

$$SD(R_t) = R_t \times \sqrt{\frac{\frac{C_t}{T_t^2} + SD(B_t)}{\left(\frac{C_t}{T_t} - \overline{B}_t\right)^2} + \frac{\sigma_{A_t}^2}{A_t^2}} \quad ,$$

where $SD(R_t)$ = standard deviation of the tracer recovery fraction,
R_t = tracer recovery fraction,
C_t = total counts in the tracer peak,
T_t = counting time (min),
$SD(B_t)$ = standard deviation of the background in the tracer peak,
B_t = the background in the tracer peak,
σ_{A_t} = standard deviation of the known value of A_t, and
A_t = activity of the standard.

11.5. Sample activity.

11.5.1. The activity in the samples is given by

$$A_x = \frac{\left(\frac{C_x}{T_x} - \overline{B}_x\right)}{\overline{E}_x \times R_t} \quad ,$$

where A_x = sample activity (dpm),
C_x = gross counts for the sample,
T_x = counting time for the sample (min),
$\overline{B}_x$ = average background count rate (cpm),
$\overline{E}_x$ = average counting efficiency, and
R_t = tracer recovery fraction.

11.5.2. The standard deviation of the activity in the sample is given by

$$SD\ (A_x) = |A_x| \times \frac{\sqrt{\frac{C_x}{T_x^2} + SD^2\ (\overline{B}_x)}}{\left(\frac{C_x}{T_x} - \overline{B}_x\right)^2} \quad ,$$

where $SD\ (A_x)$ = standard deviation of sample activity (dpm),
$|\ A_x|$ = absolute value of A_x from Step 11.5.1,

C_x = gross counts for the sample,
T_x = sample counting time,
$\overline{B}_x$ = average background count rate, and
$SD(\overline{B}_x)$ = standard deviation of the average background.

11.6. Calculation to put the radiometric measurement into the required form for final reporting.

11.6.1. Reported activity.

$$R_x = \frac{A_x}{K \times Q} ,$$

where R_x = sample activity in correct units for reporting (pCi/L),
A_x = sample activity (dpm),
K = conversion factor (2.22 pCi/dpm), and
Q = sample quantity analyzed.

11.6.2. The propagated uncertainty of the reported activity is calculated by

$$U_x = |R_x| \times \sqrt{\frac{SD\,(A_x)^2}{A_x^2} + \frac{SD\,(\overline{E}_x)^2}{\overline{E}_x^{\,2}} + \frac{SD\,(\overline{E}_t)^2}{\overline{E}_t^{\,2}} + \frac{SD\,(R_t)^2}{R_t^{\,2}} + \frac{SD\,(Q)^2}{Q^2}} ,$$

where U_x = propagated uncertainty of the reported activity,
R_x = reported activity,
$SD\,(A_x)$ = standard deviation of sample activity,
$SD\,(\overline{E}_x)$ = standard deviation of the average sample efficiency,
$SD\,(\overline{E}_t)$ = standard deviation of the average tracer efficiency,
$SD(R_t)$ = standard deviation of the tracer recovery fraction,
$SD\,(Q)$ = standard deviation of the sample quantity aliquoted,
A_x = sample activity,
$\overline{E}_x$ = average count efficiency in the sample peak,
$\overline{E}_t$ = average count efficiency in the tracer peak,
R_t = tracer recovery fraction, and
Q = sample quantity aliquoted in reporting units.

12. Proper Waste Disposal Practices

12.1. Discard the column washes from Step 9.2.6 into the acid drain system.

12.2 Discard the plating solution from Step 9.4.6 into the acid drain system.

12.3. Discard the plates into the radioactive waste container.

12.4. Waste pickup.

12.4.1. See AR 10-3 for the general Laboratory policy on waste disposal.

12.4.2. Fill out the waste Profile Request Form (PRF) and send it to EM-8 along with all pertinent MSDS sheets. The form will be returned to the group Waste Management coordinator, who will return it to the waste generator.

12.4.3. After the PRF is signed off and returned by EM-8 with a reference number, fill out the Radioactive Solid Waste Disposal (RSWD) request form. Send this form and the original PRF(s) to EM-7.

12.4.4. After the RSWD is returned, call HS-1 to monitor and tag the container.

12.4.5. After the container has been tagged by the monitor, call EM-7 to arrange for pickup of the container.

13. Source Materials

13.1. I. K. Kressin and G. R. Waterbury, "The Quantitative Separation of Plutonium from Various Ions by Anion Exchange," *Anal. Chem.* **34**, 1598-1601 (1962).

13.2. C. W. Sill and F. D. Hindman, "Preparation and Testing of Standard Soils Containing Known Quantities of Radionuclides," *Anal. Chem.* **46**, 113-118 (1974).

13.3. M. A. Gautier, E. S. Gladney, and B. T. O'Malley, "Quality Assurance for Environmental Analytical Chemistry: 1985," Los Alamos National Laboratory report LA-10813-MS (1986).

13.4. R. L. Williams, "A Computerized Alpha-Particle Spectrometry System for the Analysis of Low-Level Thorium, Uranium, Plutonium and Americium Fractions," *Int. J. Appl. Radiat. Isot.* **35**, 271-277 (1984).

13.5. E. Holm, "Review of Alpha-Particle Spectrometric Measurements of Actinides," *Int. J. Appl. Radiat. Isot.* **35**, 285-290 (1984).

13.6. *EML Procedures Manual*, 26th ed., H. L. Volchok and G. de Planque, Eds. (Environmental Measurements Laboratory, US Department of Energy, New York, New York, HASL-300, 1986).

13.7. L. A. Currie, "Limits for Qualitative Detection and Quantitative Determination," *Anal. Chem.* **40**, 586 (1968).

13.8. "Chemical, Hazardous, and Mixed Waste," Administrative Requirement 10-3, in *Environment, Safety, and Health Manual*, Los Alamos National Laboratory Manual, Chapter 1 (most recent edition).

Revisions or additions to the procedure are marked (▒▒▒▒). Where a section heading is marked, the entire section has been revised.

TABLE I. ENERGY SPECTRUM FROM ALPHA SPECTROMETER

Channel	Counts	Channel	Counts
30	1	71	360—Peak ^{239}Pu
31	4	72	279 (5.15 MeV)
32	2	73	154
33	7	74	76
34	5*	75	16
35	5	76	3
36	7	77	1*
37	11	78	1
38	12	79	0
39	30	80	0
40	35	81	0
41	58	82	0
42	71	83	0
43	130	84	0
44	127	85	1
45	171	86	0
46	181—Peak ^{242}Pu	87	0
47	133 (4.9 MeV)	88	0
48	66	89	0
49	25	90	1
50	2	91	3*
51	1	92	0
52	4*	93	0
53	1	94	1
54	1	95	1
55	0	96	3
56	6	97	5
57	5	98	7
58	7	99	9
59	7*	100	19
60	12	101	21
61	21	102	28
62	24	103	50—Peak ^{238}Pu
63	31	104	32 (5.5 MeV)
64	50	105	31
65	81	106	27
66	109	107	22

TABLE I. ENERGY SPECTRUM FROM ALPHA SPECTROMETER (Cont.)

Channel	Counts	Channel	Counts
67	145	108	4
68	215	109	0*
69	270	110	0
70	335	111	0

*Counts integrated over 19 channels, 12 to the left and 6 to the right of the energy peak.

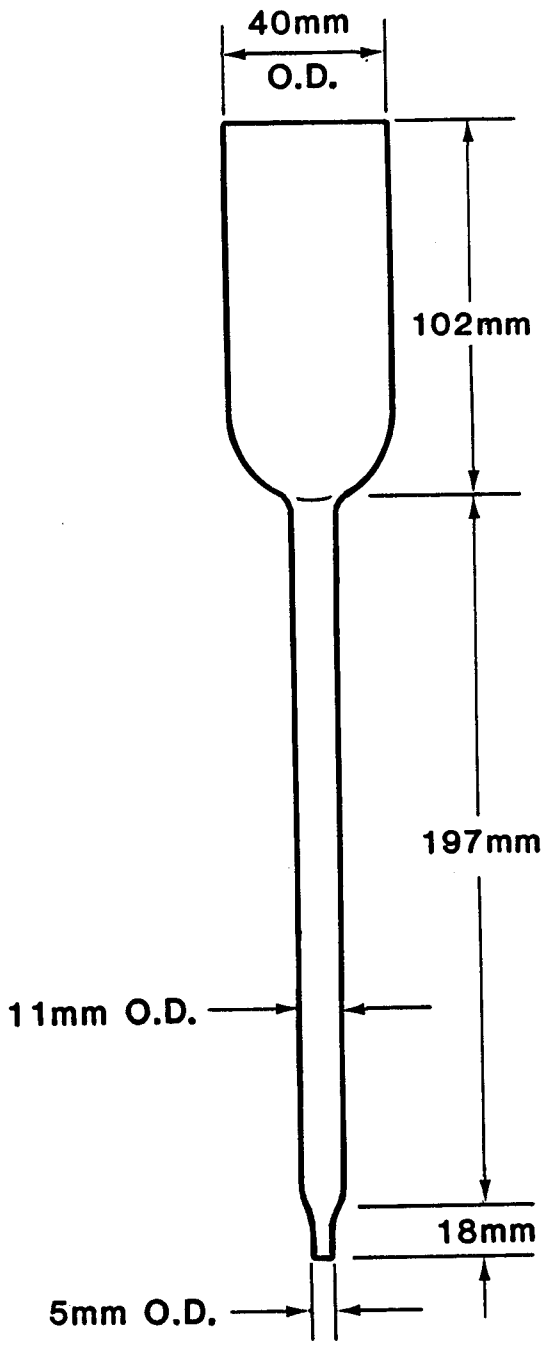

Fig. 1. Ion exchange column for plutonium.

RADIUM-226 IN GEOLOGICALS — GAMMA-RAY SPECTROMETRY

Analyte: Radium-226	**Method No.:** ER170
Matrices: All geologicals (soils, rocks, sediments, ores)	**Minimum Detectable Concentration:** 1 pCi/g
Procedure: Instrumental gamma-ray spectrometry	**Accuracy and Precision:** 100% ± 6% above 10 pCi/g
Effective Date: 01/01/84	**Authors:** Ernest S. Gladney Richard J. Peters Wanita Eberhardt

SAFETY NOTE: Before beginning this procedure, read all of the Material Safety Data Sheets for the chemicals listed in Sec. 7. Read Sec. 4.3 of the EM-9 Safety Manual for further information on personal protective clothing and equipment.

1. Principles of Method

1.1. Silicate materials from almost any source contain some ^{226}Ra from the decay of naturally occurring uranium.

1.2. Radium-226 has a variety of decay products, some of which emit gamma radiation. Some of these daughter nuclides are gases and must be contained to assure complete establishment of radioactive decay equilibrium.

1.3. Quantitative data on ^{226}Ra concentrations are obtained by instrumental gamma-ray spectrometry following a 30-d ingrowth period for reestablishment of radioactive equilibrium on samples that have been packaged in gas-tight containers.

2. Sensitivity

2.1. A detection limit of approximately 1 pCi/g can be achieved in our laboratory. The detection limit is influenced primarily by the uncertainty of the background determination.

3. Accuracy and Precision

3.1. The Canadian Certified Reference Materials Project (CCRMP) has a number of well-characterized uranium ores with certified ^{226}Ra concentrations. Results from the analysis of these materials are shown in the following table:

CCRMP No.	EM-9 (pCi/g)			CCRMP Certified Value (pCi/g)		
BL-1	72	±	3	75	±	4
BL-2	1510	±	60	1490	±	30
BL-3	3320	±	150	3350	±	70
BL-4	560	±	25	566	±	12
BL-5	21200	±	1000	23400	±	520
DL-1	12.2	±	1.3	13.2	±	0.7
DL-1A	35	±	3	38.2	±	1.1
DH-1	594	±	30	578	±	12
DH-1A	790	±	40	859	±	30

4. Interferences

4.1. Direct spectral interference is experienced from ^{226}Ra daughter products in materials surrounding the detectors. Cement block walls and concrete floors commonly have several pCi/g of ^{226}Ra. Careful assessment of the size and stability of the counting system background is essential for quantitative work.

5. Collection and Storage of Samples

5.1. There are no special collection and storage requirements.

6. Apparatus

6.1. Gamma-ray spectrometer: equipped with large, high-resolution, high-efficiency hyper-pure geranium (HPGE) detectors.

6.2. Seamless metal cans: 20- to 100-g capacity. Ellisco, Inc., Pennsauken, New Jersey.

6.3. Tape with low gas permeability (black plastic electrician's tape is adequate).

6.4. Analytical balance: top-loading, 100-g capacity.

6.5. Ball mill.

6.6. Bottles: polyethylene, 500-mL.

6.7. Pipettes: disposable, 1-mL.

6.8. Hammer.

6.9. Steel ball bearings: 1-in.-diam.

7. Reagents

7.1. Silicone dioxide or sea sand (powdered, $^{226}Ra < 0.001$ pCi/g).

8. Calibration and Standards

8.1. Maintain National Bureau of Standards (NBS) traceability throughout the calibration procedure. The concentration of ^{226}Ra in reference materials is standardized against NBS Standard Reference Material (SRM) 4958, (Radium-226 Gamma-ray Standard).

8.1.1. Fill seamless cans half full with SiO_2.

8.1.2. Pipette 1 mL of NBS SRM 4958 on the SiO_2 surface, spreading the droplets evenly over the entire surface.

8.1.3. Fill the can with SiO_2 and tape shut for the 30-d ingrowth of ^{226}Ra decay products.

8.1.4. Two different sample geometries are currently employed. Prepare a set of calibration standards for each geometry.

8.2. Standardize routine samples against CCRMP or other geological reference materials with well-established ^{226}Ra contents. Package samples and reference materials in identical cans so that constant counting geometry is maintained on the gamma-ray spectrometer.

8.3. Take 10,000-s background counts in conjunction with each sample set.

8.4. Maintain detector energy calibrations at 1 keV/channel and check each week with NBS SRM 4218-E, ^{152}Eu Point-Source Standard.

9. Procedure

9.1. Sample preparation.

9.1.1. Break the sample into pea-sized chunks in the original sample bag using a hammer or other convenient implement.

9.1.2. Place approximately 200 g of sample into a 500-mL polyethylene bottle. Add several steel ball bearings. Close the bottles, tape on the caps, and ball-mill until a uniform powder is obtained (usually overnight).

9.1.3. Weigh each seamless can. Fill the seamless cans completely with powdered sample and seal with electrical tape. Hold the samples at least 30-d to allow for daughter nuclide ingrowth.

9.2. Gamma-ray spectrometry.

9.2.1. After at least a 30-d ingrowth, count all samples and standards in the same position on the face of the same HPGE detector. Accumulate data for 1,000 to 50,000 s depending upon the ^{226}Ra content.

9.2.2. Transfer the spectral data to a VAX disc for off-line data reduction. Record the sample number, data filename, detector number, matrix, and counting date in a Laboratory notebook.

10. Operation of Equipment

10.1. See the operator's manual for operation of the gamma-ray spectrometer.

11. Calculations

11.1. Calculate the ^{226}Ra result using the following equation:

$$R = \frac{C_s - C_b}{E \times CT \times Q} ,$$

where R = ^{226}Ra concentration (pCi/g),
C_s = net counts in the 609-keV peak of ^{214}Bi,
C_b = background counts,
E = detector efficiency,
CT = counting time (s), and
Q = sample weight (g).

NOTE: No decay corrections are required because both sample and standard are in radioactive equilibrium.

11.2. Calculate the uncertainty in the ^{226}Ra result using the following equation:

$$U = |R| \times \sqrt{\left(\frac{\sqrt{(C_s + C_b)}}{C_s + C_b}\right)^2 + (S_e)^2} ,$$

where U = uncertainty (pCi/g),
R = ^{226}Ra concentration (pCi/g),
C_s = net counts in the 609-keV peak of ^{214}Bi,
C_b = background counts, and
S_e = 0.05 (minimum reported uncertainty).

12. Source Materials

12.1. E. S. Gladney, W. Eberhardt, and R. J. Peters, "Determination of ^{226}Ra in CCRMP Reference Samples by Independent Nuclear Methods," *Geostandards Newsletter* **6**, 5-6 (1982).

12.2. H. F. Steger, "Certified Reference Materials," CANMET report CM84-14E (1984).

RADIUM-226 IN WATER — RADON EMANATION

Analyte: Radium-226	**Method No.:** ER180
Matrix: Water	**Minimum Detectable Concentration:** 0.05 pCi/sample
Procedure: Gas phase separation of ^{222}Rn with alpha scintillation counting of daughter nuclides	**Accuracy and Precision:** 97% ± 6%
Effective Date: 01/01/84	**Authors:** Richard J. Peters Bob B. Bates Daryl Knab

SAFETY NOTE: Before beginning this procedure, read all of the Material Safety Data Sheets for the chemicals listed in Sec. 7. Read Sec. 4.3 of the EM-9 Safety Manual for information on personal protective clothing and equipment. Read Sec. 12 of this procedure and Source Material 13.6 for proper waste disposal practices.

1. Principle of Method

1.1. The ^{226}Ra in the sample is concentrated and separated by coprecipitation with barium sulfate.

1.2. The concentrated sample is redissolved and sealed in a purged flask (bubbler).

1.3. After 21 d of ingrowth of the ^{222}Rn daughter into the sample, the ^{222}Rn is transferred to a scintillation cell using helium as the carrier and counted on an alpha scintillation radon counter.

2. Sensitivity

2.1. The method has a detection limit of ~0.05 pCi/sample when counted for 1000 minutes.

2.2. The detection limit is strongly influenced by individual scintillation cell backgrounds.

3. Accuracy and Precision

3.1. The National Institute for Standards and Technology (NIST) has no dilute radium-in-water Standard Reference Materials (SRMs). Accuracy and precision for waters are evaluated by our results from EPA Radium in Water

intercomparison samples and from in-house QC samples using EPA solution no. 1617. Over a period of 5 years, the determination of radium in water in these materials had a mean recovery of 97% ± 6% on 48 measurements.

4. Interference

4.1. Interference by other radioisotopes is highly unlikely in water samples. Only ^{226}Ra produces ^{222}Rn, a noble gas, which is readily separated by bubbling helium through the aqueous sample.

5. Collection and Storage of Samples

5.1. Filter and acidify water samples as soon after collection as possible.

6. Apparatus

6.1. Drying tube (see Fig. 1).

6.2. Radon emanation apparatus (see Fig. 2).

6.3. Scintillation cells (see Fig. 3): Rocky Mountain Scientific Glass Blowing Co.

6.4. Beakers: 1-L.

6.5. Radon bubbler (see Fig. 4).

6.6. Filtration system.

6.7. Filter: 0.45-μm, Millipore.

6.8. Crucible: platinum, 100-mL.

6.9. De Khotinsky cement.

6.10. Analytical balance: top-loading, 300-g capacity.

6.11. Graduated cylinder: 50-mL.

6.12. Glass wool.

6.13. Pipettes: Pasteur, disposable, 5.75 in. long by 7.0 mm o.d.

7. Reagents

7.1. Barium carrier. Dissolve 3.0 g of $Ba(NO_3)_2$ in 1000 mL of distilled water.

7.2. Hydrochloric acid (concentrated, reagent-grade).

7.3. Hydrochloric acid (1 M). Dilute 83 mL of concentrated HCl to 1 L with distilled water.

7.4. Hydrochloric acid (4 M). Dilute 333 mL of concentrated HCl to 1 L with distilled water.

7.5. Hydrochloric acid (2.4 M). Dilute 200 mL of concentrated HCl to 1 L with distilled water.

7.6. Sulfuric acid (concentrated, reagent-grade).

7.7. Sulfuric acid (0.5 M). Dilute 14 mL of concentrated H_2SO_4 to 500 mL with distilled water.

7.8. Phosphoric acid (concentrated, reagent-grade).

7.9. Hydrofluoric acid (concentrated, reagent-grade).

7.10. Ascarite (drying reagent, 8-20 mesh).

7.11. Magnesium perchlorate (reagent-grade).

7.12. Helium gas.

8. Calibration and Standards

8.1. Calibrate all determinations against NIST SRM 4958, Radium-226 Gamma-ray Standard.

8.2. Working standards should contain approximately 0.5 to 50 pCi of total radium.

9. Procedure

9.1. Radium separation by coprecipitation on barium sulfate.

9.1.1. Add 20 mL of HCl to a 900-mL water sample and stir.

9.1.2. Add 20 mL of Ba carrier solution to the sample while stirring.

9.1.3. Add 20 mL of concentrated H_2SO_4 to the sample while stirring.

9.1.4. Cover the beaker with a watch glass and let stand overnight.

9.1.5. Filter the sample through a 0.45-μm filter. Rinse the beaker and funnel several times with distilled water.

9.1.6. Rinse the beaker and funnel with 0.5 M H_2SO_4.

9.1.7. Fold the filter carefully and transfer it to a platinum crucible.

9.2. Barium sulfate dissolution.

9.2.1. Hold the crucible over a flame and heat slowly to prevent the filter from bursting into flame. Continue ashing until all of the material is white.

9.2.2. Cool the crucible. Add 1.2 mL of H_3PO_4 and 2.5 mL of HF. Place the crucible on a hot plate set on low (approximately 200°C) for 3-4 h.

9.2.3. Raise the temperature to approximately 300°C (medium setting) for 20 min.

9.2.4. Raise the temperature to approximately 400°C (high setting) for 20 min.

9.2.5. Hold the crucible over an open flame and heat below redness to dissolve the precipitate. When the solution is clear, carefully manipulate the crucible so that the H_3PO_4 covers all areas of the crucible including the lip. Heat again and swirl several times.

9.2.6. Remove the crucible from the flame and allow to cool. Fill the crucible with 4 M HCl and place on a hot plate set at approximately 200°C overnight.

9.2.7. Add 6 mL of 2.4 M HCl to the crucible. Warm the sample and swirl until the precipitate is in solution.

9.2.8. Transfer the sample to a de-emanation bubbler, rinsing the crucible several times with distilled water (see Fig. 4).

9.2.9. Heat the ground-glass portion of the upper stopcock and the bubbler. Join the two parts using De Khotinsky cement.

9.2.10. With both stopcocks open, place the bubbler on the de-emanation stand. Attach the helium line to the lower stopcock and open the helium tank valve (see Fig. 2).

9.2.11. Slowly open the helium control valve until bubbles start to rise above the bottom frit (see Fig. 2). De-emanate for 10 min.

9.2.12. At the end of 10 min, close both stopcocks and record the time on the calculation sheet (see Fig. 5, T_1). Store the bubbler for 21 d for ingrowth of ^{222}Rn.

9.2.13. When all samples have been de-emanated, close the helium control valve and the helium tank valve.

9.3. De-emanation.

9.3.1. Prepare fresh drying tubes (see Fig. 1).

9.3.1.1. File off the narrow tip of a Pasteur pipette.

9.3.1.2. Pack a small amount of glass wool into the tip of the tube.

9.3.1.3. Fill the lower half of the tube with ascarite and the upper half of the tube with magnesium perchlorate.

9.3.1.4. Place a small amount of glass wool into the top of the tube.

9.3.2. Select a scintillation cell (see Fig. 3). Connect the cell and the bubbler to the de-emanation stand as shown in Fig. 2. Place a cap on the window of the cell to prevent the activation of zinc sulfide by light.

9.3.3. Turn on the vacuum pump.

9.3.4. Open the helium valve on the tank.

9.3.5. Open the stopcock on the cell and alternate helium and vacuum several times to flush the line between the cell and the bubbler.

9.3.6. Leave vacuum on and check for leaks.

9.3.6.1. The mercury column should hold pressure without dropping while the vacuum is turned on.

9.3.6.2. Turn the vacuum valve to the **off** position. The mercury column should continue to hold pressure.

9.3.6.3. Turn the vacuum pump off. The mercury column should continue to hold pressure, indicating the absence of leaks.

9.3.7. Carefully open the upper stopcock on the bubbler.

NOTE: Open the upper stopcock slowly, so that liquid will not rise into the stopcock.

9.3.8. Gradually open the lower stopcock on the bubbler attached to the helium line.

9.3.9. Gradually open the helium control valve attached to the stand until helium is bubbling through the frit. Adjust the He flow until a steady bubbling rate is obtained.

9.3.10. Observe the mercury column. When the two legs are equal in height (approximately 10-15 min), (1) close the stopcock on the cell, (2) close the two stopcocks on the bubbler, and (3) close the helium control valve. Record the time (see Fig. 5, T_2).

9.3.11. When all samples are complete, close the helium tank valve.

9.4. Radon scintillation counting.

9.4.1. Place the cell in the counting chamber immediately after de-emanation and leave it in the chamber for a minimum of 4 h. This allows the radon daughters to come into equilibrium.

9.4.2. At the end of holding time, record the time on the calculation sheet (see Fig. 5, T_3) and turn on the counter.

9.4.3. Count the sample for 1000 min (overnight).

NOTE: After each analysis, flush the cell three times by evacuation and filling with helium. Store the cell filled with helium at atmospheric pressure. This procedure removes radon from the cell and prevents the buildup of radon daughter products.

9.5. Carefully clean the bubblers between each use. Regrease all stopcocks after each cleaning to minimize leakage.

10. Operation of Equipment

10.1. Instrument description for scintillation cell counting.

10.1.1. The radon counting system is composed of commercially available instrumentation modules. It consists of a 3-in. photomultiplier (PM) tube optically coupled with a 0.5-in. quartz light pipe, PM tube base, scintillation type preamplifier, linear amplifier, and timer/counter. Each of the four systems is powered by a separate high-voltage power supply.

10.1.2. The photomultiplier tube and base assembly have been modified to fit within a 16.5- by 16.5- by 22.9-cm light-tight aluminum enclosure. The photomultiplier tube housing is also covered by a Mumetal sheet to minimize the interference from magnetic fields generated by any of the counting equipment. Access to the top of the detector is gained by

removing the cylindrical cover on the top of the chamber. The entire assembly is light-tight, minimizing signal response from thermalization.

10.2. For complete operating instructions refer to Method No. CR190, Radium-226 Counting System Operating Procedure, in the EM-9 analytical procedure manual, LA-10300-M.

10.2.1. Remove the cylindrical cover from the detector chamber and carefully place the scintillation cell on the quartz light pipe. Replace the cover before counting.

10.2.2. Set the high voltage to the appropriate level as noted on the high-voltage supply for each counter (the required voltage varies from 1100 to 1450 volts positive).

10.2.3. Set the timer on the timer/counter module for the required 16.7-h counting period. For this model timer/counter, a time of M = 1 and N = 3 minutes should be set (time = 1000 min).

10.2.4. Clear the counter by pressing the **STOP** button and then the **RESET** button on the front panel of the counter.

10.2.5. Initiate the counting sequence by pressing the **COUNT** button next to the **RESET** button.

10.2.6. Record the start count time on the data sheet (see Fig. 5).

10.2.7. After the counting period has ended, record the total number of counts on the data sheet.

10.2.8. Record the date and time that the count was completed on the data sheet (see Fig. 5).

10.2.9. TURN OFF the high-voltage supply before removing the lid to the counter. Exposing a fully biased PM tube to direct light damages the tube and will significantly shorten its lifetime.

11. Calculations

11.1. This section gives calculations of radiometric counting data for determinations made without a radiotracer. Most data values are assumed to have Poisson distributions and all time-measurement errors are assumed to be insignificant. Actual sample calculations are done by the Symphony radium calculation program on the IBM computer in room 180 or by the hand calculation method in 11.4.

11.2. Counting efficiency.

11.2.1. The counting efficiency of the counter for single-background and standard runs is given by

$$E = \frac{\left(\frac{C_s}{T_s} - \overline{B}\right) \times D_c}{A_s \times G \times D_g} ,$$

where E = efficiency (counts per disintegration),
C_s = gross counts for the standard,
T_s = counting time for standard (min),
$\overline{B}$ = average background count rate,
D_c = correction for decay during counting,
A_s = activity of the standard (dpm),
G = correction for daughter growth to equilibrium, and
D_g = decay correction from final separation until start of count.

11.2.2. The average counter efficiency is calculated from a running average of the last n values of individual E determinations.

$$\overline{E} = \frac{\sum_{(i=1)}^{n} E_i}{n} ,$$

where $\overline{E}$ = the running average of the counting efficiency,
n = the number of measurements used for calculation, and
E_i = the individual counting efficiencies.

11.2.3. Standard deviation of $\overline{E}$.

$$SD(\overline{E}) = \overline{E} \times \sqrt{\frac{\sum_{i=1}^{n} (E_i - \overline{E})^2}{(n-1)\, n\, \overline{E}^2} + \frac{(\sigma_{A_s})^2}{A_s^2}} ,$$

where SD ($\overline{E}$) = standard deviation of the average efficiency,
$\overline{E}$ = average efficiency (counts per disintegration) from 11.2.2,
E_i = individual efficiencies from 11.2.1,

n = number of values of E used,
A_s = activity of the standard (dpm), and
σ_{A_s} = stated standard deviation associated with the known value of A_s.

11.3. Background.

11.3.1. Background count rate for each cell is

$$B = \frac{C_b}{T_b} ,$$

where B = background count rate (cpm),
C_b = gross counts for the background, and
T_b = counting time for the background (min).

11.3.2. A running average of the background count rate is calculated by

$$\overline{B} = \frac{\sum_{i=1}^{n} B_i}{n} ,$$

where $\overline{B}$ = average background count rate,
B_i = individual background count rates, and
n = number of values used.

11.3.3. The standard deviation of the average background count rate is calculated by

$$SD(\overline{B}) = \sqrt{\frac{\sum_{(i=1)}^{n} (B_i - \overline{B})^2}{(n-1) \times n \times \overline{B}^2}} ,$$

where $SD(\overline{B})$ = standard deviation of the running average of the background,
$\overline{B}$ = average background,
B_i = individual background count rates, and
n = number of values used.

11.4. Sample activity.

11.4.1. The activity in the sample is given by

$$A_x = \frac{\left(\frac{C_x}{T_x} - \overline{B}\right)}{\overline{E}} ,$$

where A_x = sample activity (dpm),
C_x = gross counts for the sample,
T_x = counting time for the sample (min),
$\overline{B}$ = average background count rate (cpm), and
$\overline{E}$ = average counting efficiency.

11.4.2. The standard deviation of the activity in the sample is given by

$$SD(A_x) = |A_x| \sqrt{\frac{\frac{C_x}{T_x^2} + SD(\overline{B})^2}{\left(\frac{C_x}{T_x} - \overline{B}\right)^2}} ,$$

where $SD(A_x)$ = standard deviation of sample activity (dpm),
$|A_x|$ = absolute value of sample activity,
C_x = gross counts for the sample,
T_x = sample counting time,
$\overline{B}$ = background count rate, and
$SD(\overline{B})$ = standard deviation of the average background count rate.

11.4.3. The minimum detectable activity for low-background instruments is calculated by

$$MDA = \frac{4.6 \times SD(B) + 3}{K \times T_b} ,$$

where MDA = minimum detectable activity (dpm),
SD(B) = standard deviation of the background count rate,
K = constant in sample units, and
T_b = counting time for the background.

11.5. Growth and decay times.

11.5.1. Use the calculation sheet (Fig. 5).

11.5.2. Record the first de-emanation time, T_1.

11.5.3. Record the second de-emanation time, T_2.

11.5.4. Calculate the radon daughter growth:

$$C_g = 1 - e^{-\ln 2\,(T_2 - T_1)/T_{1/2}} ,$$

where C_g = the growth correction factor,
$T1/2$ = the half-life of ^{222}Rn (3.825 d),
T_2 = second de-emanation time in d, and
T_1 = first de-emanation time in d.

11.5.5. Record the count start time plus one-half the count time, T_3.

11.5.6. Correct for the radon decay after the last separation:

$$C_d = e^{-\ln 2(T_3 - T_2)/T_{1/2}} ,$$

where C_d = the radon decay correction factor after the second de-emanation,
$T_{1/2}$ = the half-life of ^{222}Rn 3.825 d,
T_2 = second de-emanation time in d, and
T_3 = midtime of the counting time in d.

11.5.7. Correct for the radon decay and daughter growth during counting:

$$C_c = \frac{\frac{\ln 2}{T_{1/2}} \times T_c}{1 - e^{-\ln 2 \times T_c/T_{1/2}}} ,$$

where C_c = the radon decay during counting,
T_c = count time in d, and
$T_{1/2}$ = the half-life of ^{222}Rn (3.825 d).

11.6. Calculation for converting counting results to proper units for reporting.

11.6.1. Reported sample activity.

$$ACT_x = \frac{A_x \times C_c}{C_d \times C_g \times Q \times 2.22} ,$$

where ACT_x = sample activity in reporting units,
A_x = calculated activity (dpm),
C_c = radon decay during counting,
C_d = radon decay after second de-emanation,
C_g = growth of radon after first de-emanation,
Q = sample aliquot in reporting units, and
2.22 = constant.

11.6.2. Uncertainty of reported sample activity.

$$U_x = |ACT_x| \times \sqrt{SD(A_x)^2 + SD(\overline{E})^2 + SD(Q)^2} ,$$

where U_x = standard deviation of the reported sample activity,
ACT_x = reported sample activity,
$SD(A_x)$ = standard deviation of sample activity,
$SD(\overline{E})$ = standard deviation of average efficiency, and
$SD(Q)$ = standard deviation of sample quantity measurement.

12. Proper Waste Disposal Practices

12.1. Discard the filtrate from Step 9.1.6 into the acid waste system.

12.2. Discard the solution from Step 9.5 into the acid waste system.

13. Source Materials

13.1. D. E. Rushing, "The Analysis of Effluents and Environmental Samples from Uranium Mills and of Biological Samples for Uranium, Radium, and Polonium," United States Department of Health, Education and Welfare, Division of Water Supply and Pollution Control, Colorado River Basin Water Quality Control Project Laboratory, report no. SM-41-44 (1963).

13.2. E. S. Gladney, W. Eberhardt, and R. J. Peters, "Determination of Ra-226 in CCRMP Reference Samples by Independent Nuclear Methods," *Geostandards Newsletter* **6**, 5-6 (1982).

13.3. M. A. Gautier, E. S. Gladney, and B. T. O'Malley, "Quality Assurance for Health and Environmental Chemistry: 1985," Los Alamos National Laboratory report LA-10813-MS (1986).

13.4. "American National Standard for Performance Criteria for Radiobioassay," draft, American National Standards Institute, ANSI N13.30 (1989).

13.5. L. A. Currie, "Limits for Qualitative Detection and Quantitative Determination," *Anal. Chem.* **40**, 586-593 (1968).

13.6. "Chemical, Hazardous, and Mixed Waste," Administrative Requirement 10-3, in *Environment, Safety, and Health Manual*, Los Alamos National Laboratory Manual, Chapter 1 (most recent edition).

Revisions or additions to the procedure are marked (▒▒▒). Where a section heading is marked, the entire section has been revised.

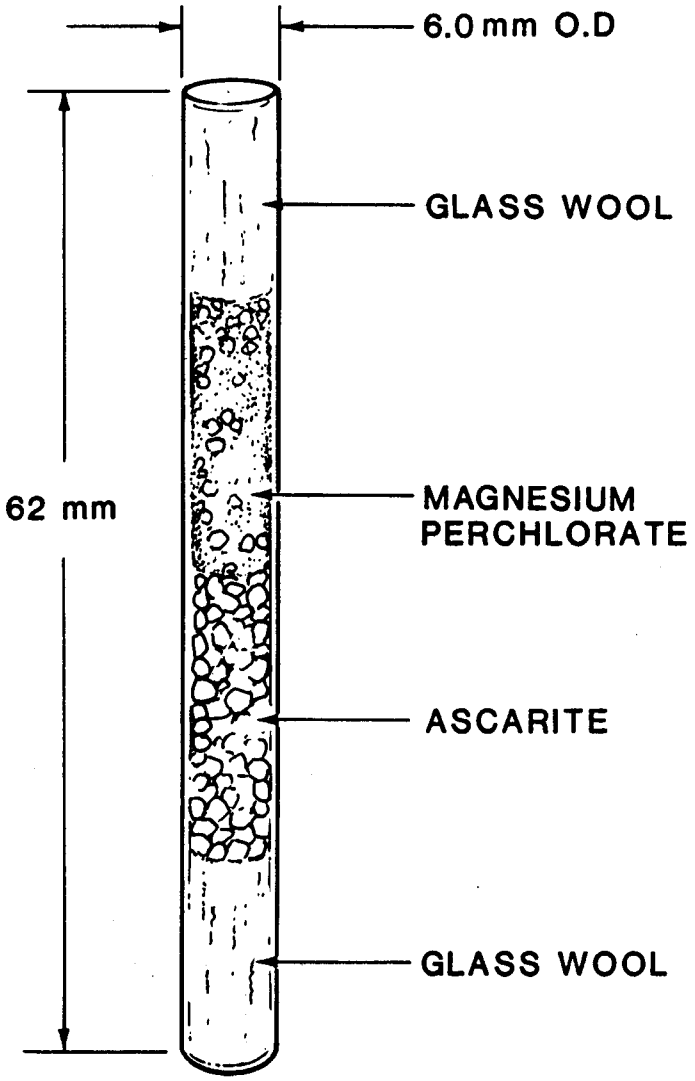

Fig. 1. Drying tube.

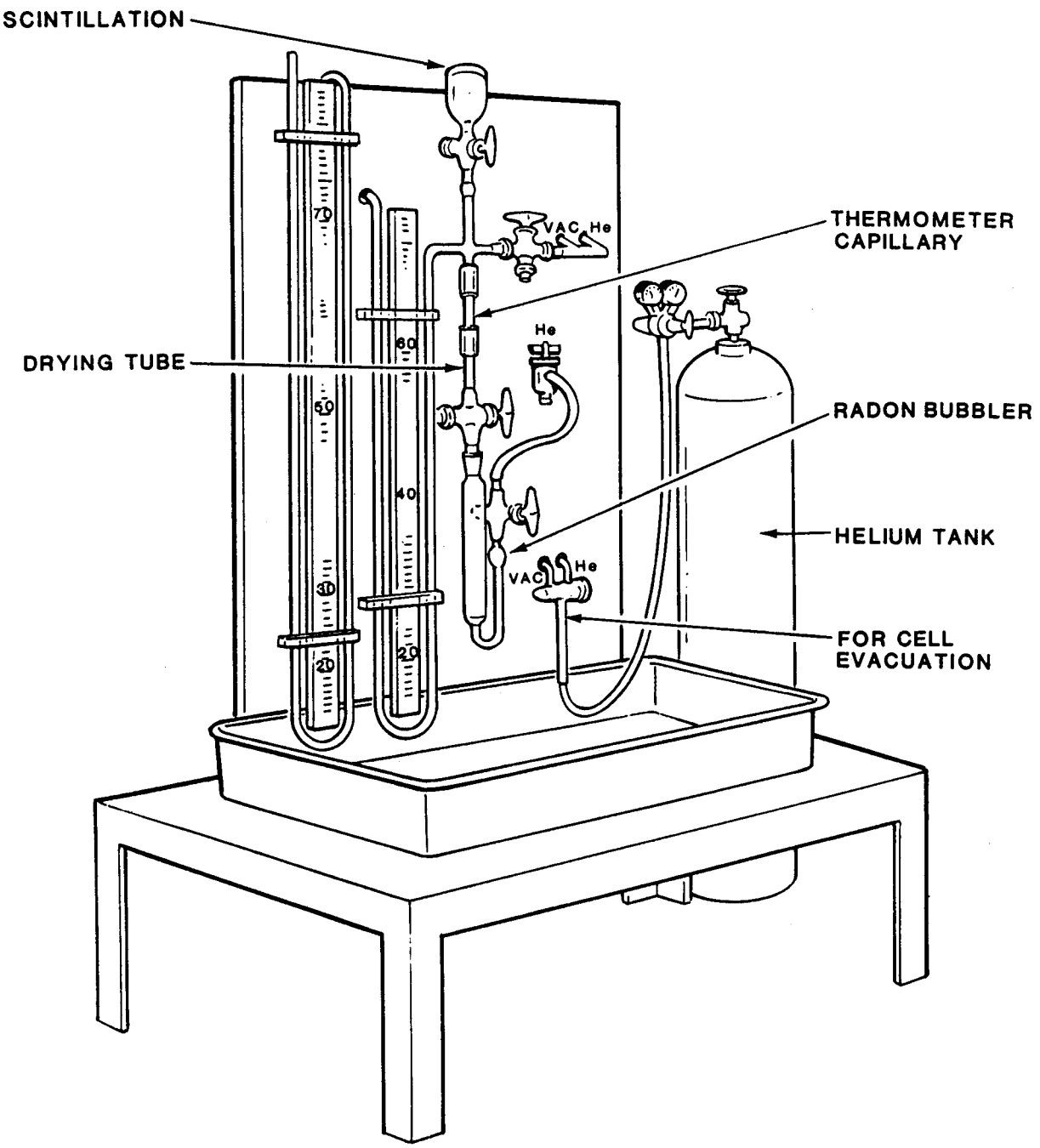

Fig. 2. Radon emanation apparatus.

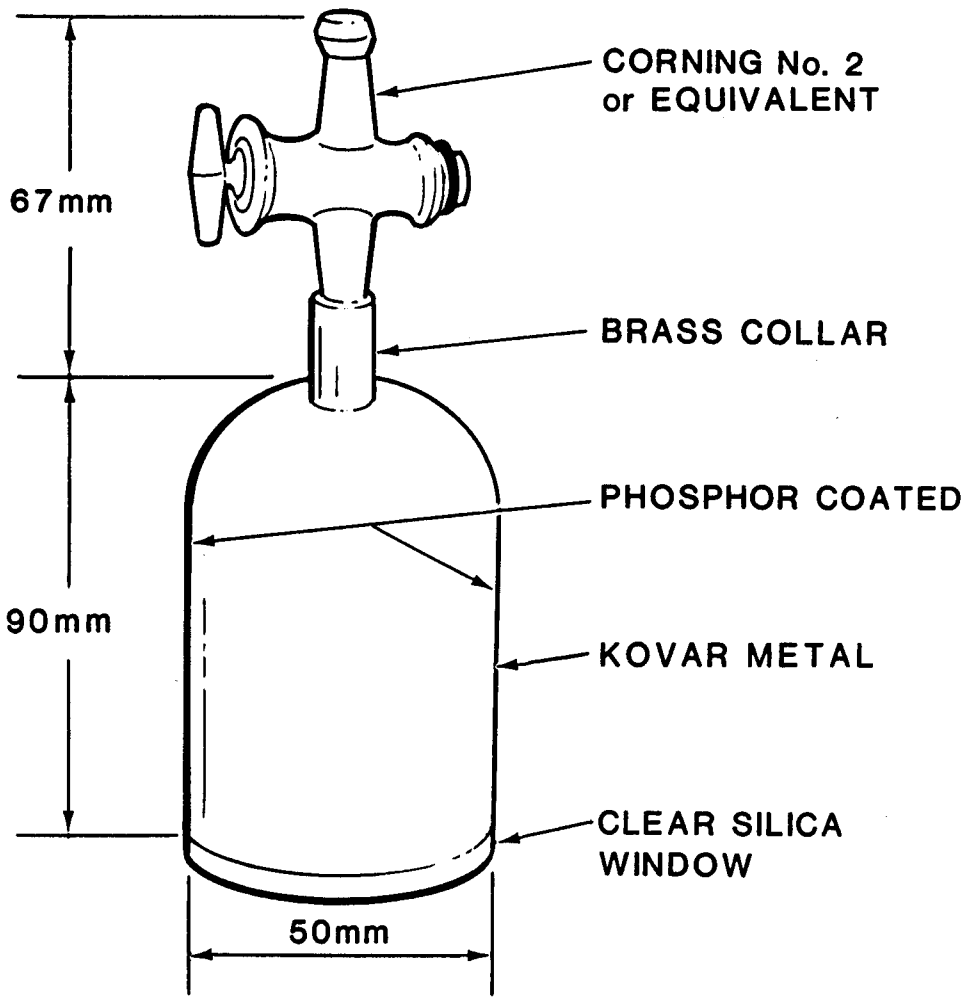

Fig. 3. Scintillation cell for radon counting.

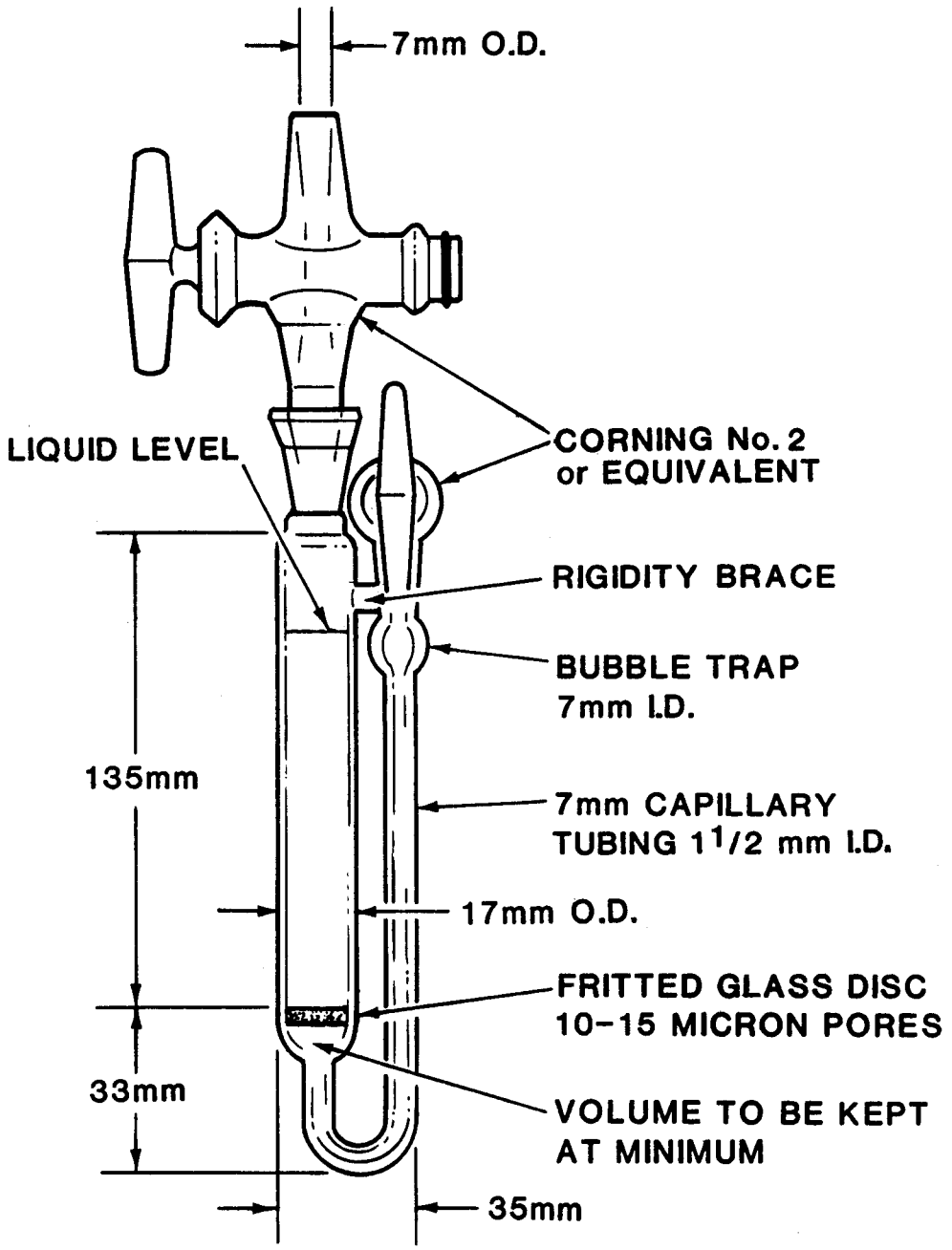

Fig. 4. Radon bubbler.

RADIUM-226 CALCULATION SHEET

Request Number _____ Date _____

Owner _____ Technician _____

	Detector Number			
	1	2	3	4
Sample No.				
Aliquot (A)				
Cell No.				
Cell Bkg.(B)				
Cell Eff.(E)				
First Deemanation(T_1) Date (Julian)				
Time (2400 Clock)				
Second Deemanation(T_2) Date (Julian)				
Time (2400 Clock)				
Radon Ingrowth Factor(G)				
Count Times (T_3) Start Date (Julian)				
Start Time (2400 Clock)				
Count Time (minutes)(T)				
Decay Factor (T_2 to T_3)(D_f)				
Decay during count (D_c)				
Total Counts (C)				
Activity (pCi/aliquot)				

$$\text{Activity (pCi)} = \frac{\left[\frac{C}{T} - B\right] \times D_c}{E \times 2.22 \times G \times D_f \times A}$$

Fig. 5. Radium calculation sheet.

STRONTIUM-90 IN ENVIRONMENTAL MATRICES

Analyte: Strontium-90	**Method No.:** ER190
Matrix: Biologicals, soils, air filters, and waters	**Lower Limit of Detection:** 2.0 pCi/sample
Procedure: Beta counting of ^{90}Y	**Accuracy and Precision:** 99% ± 10%
Effective Date: 09/15/89	**Authors:** Bob B. Bates Richard J. Peters Daryl Knab

SAFETY NOTE: Before beginning this procedure, read all of the Material Safety Data Sheets for the chemicals listed in Sec. 7. Read Sec. 4.3 of the EM-9 Safety Manual for information on personal protective clothing and equipment. Read Sec. 12 of this procedure and Source Material 13.9 for proper waste disposal practices.

1. Principle of Method

1.1. Yttrium-90, the daughter product of ^{90}Sr decay, is removed from the sample by solvent extraction with bis(2-ethylhexyl) hydrogen phosphate (B_2EHHP).

1.2. After an ingrowth period, ^{90}Y is again extracted in B_2EHHP, back-extracted into an aqueous phase, precipitated as an oxalate, and beta counted.

2. Sensitivity

2.1. Detection limits of 2.0 pCi/sample can be achieved. This translates into the following detection limits for our standard sample sizes:

1 pCi/g in soils (2.0-g aliquot),

0.2 pCi/g in biologicals (10-g vegetation ash or 10-g soft tissue aliquot), and

3.0 pCi/L in water (500-mL aliquot).

2.2 Lower limit of detection.

$$L_D = \frac{3 \times \sqrt{C_B}}{T_B \times 2.22 \times E \times Q \times R \times D \times G} ,$$

where L_D = "a priori" lower limit of detection,
C_B = counts for the blank sample,
T_b = time of the blank count,
2.22 = factor to convert dis/min to pCi,
E = counting efficiency,
Q = sample size (g or L),
R = fractional radiochemical yield for Y carrier,
D = correction for ^{90}Y decay before counting, and
G = correction for ^{90}Y growth after the first separation.

3. Accuracy and Precision

3.1. Water samples are spiked with known quantities of National Institute of Standards and Technology (NIST) Standard Reference Material (SRM) 4919-D ($^{90}Sr/^{90}Y$) and are periodically run through the entire chemical procedure.

3.2. There are no NIST SRMs for ^{90}Sr in water, biologicals, or air filters. NIST has several soil materials characterized for ^{90}Sr, but the concentrations are at fallout levels. The Environmental Protection Agency (EPA) circulates SRMs for ^{90}Sr in water, air filters, and foodstuffs as part of their radioactivity quality check program. The DOE Environmental Measurements Laboratory provides ^{90}Sr at elevated levels on all four matrices twice a year as part of their quality assurance program. Over a period of 2 years the determination of ^{90}Sr in these reference materials exhibited the following mean recoveries:

Matrix	Mean ± std dev	(n)
Biological	1.01 ± 0.23	33
Filters	1.02 ± 0.0	2
Soils	1.01 ± 0.18	18
Waters	0.93 ± 0.17	43

4. Interferences

4.1. Any beta-emitting nuclide is a potential interference.

5. Collection and Storage of Samples

5.1. No special precautions are required for soils, biologicals, and air filters. Filter and acidify water samples upon collection.

6. Apparatus

6.1. Separatory funnels: 250- or 125-mL, glass, with stopper.

6.2. Centrifuge.

6.3. Centrifuge tubes: 50-mL, glass.

6.4. Filter paper: Whatman No. 42 (7.0-cm) and No. 542 (2.4-cm).

6.5. Crucibles: Coors "0" size.

6.6. Millipore filtering apparatus: for 2.4-cm filters.

6.7. Nylon planchet: 1-in., with 6.8 Mylar covering to fit nylon planchet.

6.8. Tennelec low-beta counter: Model No. LB-4000.

6.9. Hot plate: with magnetic stirring capability, Corning Model No. PC-351.

6.10. Magnetic stirring bars.

6.11. Muffle furnace.

6.12. Platinum crucibles: 30-mL, with cover.

6.13. Analytical balance: with weights to 0.1 mg.

6.14. Drying oven.

6.15. Desiccator.

6.16. Beakers: 250-, 600-, and 1000-mL, Pyrex.

6.17. Beakers: 200-mL, Teflon.

6.18. Graduated cylinders: 10-, 100-, and 500-mL (use plastic when measuring HF).

6.19. Flasks: 500-mL, volumetric.

7. Reagents

7.1. B_2EHHP (20%). Dissolve 200 mL of bis(2-ethylhexyl) hydrogen phosphate in 800 mL of dodecane. Work in a fume hood. Store in glass.

7.2. B_2EHHP (5%). Dissolve 50 mL of bis(2-ethylhexyl) hydrogen phosphate in 950 mL of dodecane. Work in a fume hood. Store in glass.

7.3. Yttrium carrier (24 mg of Y_2O_3/mL). Dry Y_2O_3 at 100°C overnight. Cool and weigh 12.0 g into a 500-mL volumetric flask. Dissolve in approximately 26 mL of HCl. Dilute to 500-mL with distilled water, and allow to stand overnight. Calibrate according to Step 8.3.

7.4. Hydrochloric acid (concentrated, reagent-grade).

7.5. Hydrochloric acid (2 M). Add 166 mL of concentrated HCl to 834 mL of distilled water.

7.6. Hydrochloric acid (0.08 M). Dilute 6.7 mL of concentrated HCl to 1 L with distilled water.

7.7. Ammonium hydroxide (concentrated, reagent-grade).

7.8. Ammonium hydroxide (6 M). Add 396 mL of concentrated NH_4OH to 604 mL of distilled water.

7.9. Nitric acid (concentrated, reagent-grade).

7.10. Nitric acid (3 M). Add 192 mL of concentrated HNO_3 to 808 mL of distilled water.

7.11. Ammonium oxalate solution (saturated). Add 50 g of ammonium oxalate to 1000 mL of distilled water.

7.12. Hydrogen peroxide (30%).

7.13. Hydrofluoric acid (concentrated, reagent-grade).

7.14. Boric acid, dry salt.

7.15. Boric acid solution (saturated).

8. Calibration and Standards

8.1. A New England Nuclear Pa-234m standard, 0.0164 μCi, February 1972, has been used for a calibration check of the Tennelec LB-4000 low-beta counter. The standard is counted for 2 min each week whenever the counter is to be used.

8.2. Background counts of 200 min are taken every day the counter is in use.

8.3. Standardization of yttrium carrier.

8.3.1. Yttrium carrier should be calibrated monthly and/or at the time a new carrier solution is made.

8.3.2. Add 25 mL of 3 M HNO_3 and 1 mL of yttrium carrier to four 50-mL centrifuge tubes.

8.3.3. Add 10 mL of concentrated NH_4OH to precipitate the yttrium as a hydroxide.

8.3.4. Centrifuge for 5 min and discard the supernate.

8.3.5. Dissolve the precipitate in 5 mL of 2 M HCl. Allow time for complete dissolution.

8.3.6. Add 20 mL of distilled water and adjust the pH to between 1.4 and 1.7 (approximately 10 drops of concentrated NH_4OH).

8.3.7. Heat the samples in a hot water bath for at least 10 min. Add 2 mL of saturated ammonium oxalate. A precipitate should form.

8.3.8. Cool the samples and filter through tared 2.4-cm Whatman No. 542 filters. Using wash bottles, wash the sample with a minimum of distilled water and then alcohol.

8.3.9. Remove the samples from the filter tower, and place in a preheated drying oven. Dry the samples at ~80°C for 30 min. Cool the samples for 20 min. Place the filters on an analytical balance and obtain the gross weight of the filter and precipitate. Record the weight.

8.3.10. Calculation. Calculate the average net weight ($\overline{X}$) of yttrium carrier using the table below.

Filter No.	Tare Wt.	Gross Wt.	Net Wt.	
1 _____	_____	_____	_____	
2 _____	_____	_____	_____	
3 _____	_____	_____	_____	
4 _____	_____	_____	_____	
		$\overline{X}$ =	_____	mg of yttrium carrier

9. Procedure

9.1. Begin using the ^{90}Sr data sheet (Fig. 1) as soon as sample analysis begins. Keep the data sheet up to date throughout the entire procedure; accurate times are necessary for the calculations.

9.2. Sample dissolution.

9.2.1. Soil dissolution.

9.2.1.1. Weigh a 2-g aliquot of a dry soil sample into a 200-mL Teflon beaker.

9.2.1.2. **CAUTIOUSLY** add approximately 100 mL of concentrated HNO_3. Carbonate soils can react vigorously. Add 100 mL of 48% HF.

CAUTION: HF is extremely hazardous. Refer to SOP 11, Handling Hydrofluoric Acid, for the detailed safety policy. Wear rubber gloves, eye protection, and a lab coat. Completely clean up all spills and wash thoroughly after using HF. Make all HF transfers in an exhaust fume hood to avoid toxic fumes.

9.2.1.3. Boil the mixture to dryness.

9.2.1.4. Add 10 mL of concentrated HNO_3. **CAUTIOUSLY** add 30% H_2O_2 a few drops at a time from a squeeze bottle to oxidize any organic residues.

9.2.1.5. Evaporate the solution until the first salts appear. Repeat Step 9.2.1.4 until the solution is light yellow and clear.

9.2.1.6. Add 5 mL of HCl. Add 1 g of H_3BO_3 if any HF was used.

9.2.1.7. Evaporate the solution until the first salts appear. Add 5 mL of 2 M HCl.

9.2.1.8. Evaporate the solution until the first salts appear. Dilute to 25 mL with distilled water. Cover the beaker with plastic wrap until ready for solvent extraction.

9.2.2. Water samples.

9.2.2.1. Measure a 500-mL aliquot of the water sample into a 1-L Pyrex beaker.

9.2.2.2. Add 10 mL of concentrated HNO_3 and evaporate the solution to approximately 10 mL.

NOTE: A 1-L beaker on a Corning Model No. PC-351 hot plate set at "2" can be left unattended for 15 h (overnight).

9.2.2.3. Add 10 mL of concentrated HNO_3 and heat to boiling. When the sample begins steaming, **CAREFULLY** add 6 drops of 48% HF while swirling the sample. Evaporate until the first dry spots appear.

9.2.2.4. Carefully wash down the sides of the beaker with approximately 10 mL of concentrated HNO_3.

9.2.2.5. While heating the sample, add 30% H_2O_2 by drops to decompose any organic material. Repeated additions of concentrated HNO_3 and H_2O_2 may be required to completely ash some samples. The wet ashing is complete when the residue is white or very light yellow, and dry.

9.2.2.6. Continue with Steps 9.2.1.5 to 9.2.1.8.

9.2.3. Vegetation dissolution.

9.2.3.1. Dry-ash the dried vegetation sample in a porcelain crucible at 300°C for 12 h in an ashing oven.

9.2.3.2. Raise the temperature to 500°C for 12 h or until the ash is white. Remove the sample from the oven and cool.

9.2.3.3. Weigh a 10-g sample of the ash into a 200-mL Teflon beaker. Continue with Steps 9.2.1.2 to 9.2.1.8.

9.2.4. Tissue dissolution (including bone).

9.2.4.1. Weigh a 10-g aliquot of wet soft tissue or bone, excluding feathers or hide, into a 600-mL glass beaker.

9.2.4.2. Wet-ash with concentrated HNO_3 and 30% H_2O_2 until a clear or light yellow solution is obtained. Do not use HF.

9.2.4.3. Evaporate the solution until just dry.

9.2.4.4. Continue with Steps 9.2.1.6 to 9.2.1.8.

9.2.5. Air particulate filter dissolution.

9.2.5.1. Place the air particulate filter in a 30-mL platinum crucible.

9.2.5.2. Record the crucible and sample number.

9.2.5.3. Place the crucible in a cold muffle furnace. Turn the furnace to 500°C and dry ash for 4 h. Turn off the furnace. Remove the crucible and allow to cool for 1/2 h.

9.2.5.4. Add 5-10 mL of concentrated HF a few drops at a time to start. Cover with a platinum lid and let stand overnight.

NOTE: If glass fiber filters are used, ashing will not be complete.

9.2.5.5. Evaporate to dryness on medium heat.

9.2.5.6. Repeat the addition of HF followed by evaporation. Allow the sample to cool.

9.2.5.7. Carefully wash down the cover and sides of the crucible with approximately 5 mL of concentrated HNO_3.

9.2.5.8. **CAUTIOUSLY** add 1-2 drops of 30% H_2O_2 to the crucible. When the vigorous reaction subsides, repeat the addition of H_2O_2 until the solution is clear or straw-colored.

9.2.5.9. Evaporate the solution to approximately 1 mL.

9.2.5.10. Add 2 mL of saturated H_3BO_3 solution. Heat to dissolve the sample.

9.2.5.11. Transfer the solution to a 250-mL beaker with approximately 10 mL of concentrated HCl. Continue with Steps 9.2.1.7 to 9.2.1.8.

9.3. First extraction procedure.

9.3.1. Adjust the pH of the sample to approximately 1.4, determined by short-range pH paper, using 6 M NH_4OH or 2 M HCl. Transfer the sample to a separatory funnel.

9.3.2. Add 25 mL of 20% B_2EHHP solution to the sample and shake for 2 min.

9.3.3. **Record the extraction time (T_1)** for later use in the calculations. Allow the phases to separate for at least 10 min.

9.3.4. Drain the aqueous (bottom) phase into the original beaker. Discard the organic (top) phase.

9.3.5. Add an additional 25 mL of 20% B_2EHHP to the sample. Pour the sample into the separatory funnel, shake for 2 min, and allow the phases to separate for at least 10 min. Drain and discard the organic phase.

9.3.6. Drain the aqueous (bottom) phase into a clean 250-mL glass beaker. Adjust the pH to approximately 1.4 and add 1.0 mL of ytrrium carrier.

9.3.7. Cover the beaker with plastic wrap and store the sample for at least 2 weeks to await ^{90}Y ingrowth.

9.4. Second extraction procedure.

9.4.1. If necessary, adjust the pH of the sample to approximately 1.4 using 6 M NH_4OH or 2 M HCl.

9.4.2. Add 25 mL of 5% B_2EHHP to the sample. Transfer to a separatory funnel and shake for 2 min.

9.4.3. Allow the phases to separate for at least 10 min. **Record the extraction time (T_2)** for later use in the calculations.

9.4.4. Drain the aqueous (bottom) phase into the original beaker and discard.

9.4.5. Add 25 mL of 0.08 M HCl to the organic phase in the separatory funnel. Shake for 1 min. Allow the phases to separate for at least 10 min. Drain the aqueous (bottom) phase and discard.

9.4.6. Add 25 mL of 3 M HNO_3 to the organic phase and shake for 2 min to extract the ^{90}Y. Allow the phases to separate for at least 10 min.

9.4.7. Drain the aqueous (bottom) phase into a 50-mL centrifuge tube. Add 10 mL of concentrated NH_4OH to precipitate the yttrium as a hydroxide.

9.4.8. Centrifuge the sample for 5 min and discard the supernate.

9.4.9. Dissolve the precipitate in 5 mL of 2 M HCl. Add 20 mL of distilled water. Adjust the pH between 1.4 and 1.7 for uniform hydrate precipitation (approximately 10 drops of concentrated NH_4OH).

NOTE: If a precipitate is present, filter the sample through Whatman No. 42 filter paper into a clean test tube and rinse with 0.08 M HCl.

9.4.10. Heat the sample in a hot water bath for 20 min. Add 2 mL of saturated ammonium oxalate to precipitate the yttrium as an oxalate.

9.4.11. Cool the sample and filter onto tared 2.4-cm Whatman No. 542 filters.

9.4.11.1. Wash the precipitate with a small amount of distilled water and followed by a small amount of alcohol.

9.4.11.2. While maintaining the vacuum, remove the chimney and air dry for 2 min to prevent curling of the filter paper.

9.4.12. Dry the samples in a drying oven for 20 min at approximately 80°C. Cool the samples for 20 min. Weigh the filter on an analytical balance to obtain the gross weight of the oxalate.

9.4.13. Mount the sample on a 1-in. nylon planchet with a Mylar covering.

9.4.14. Count the sample in a gas-flow proportional beta counter for 200 min (see Section 10).

9.4.15. **Record the midtime of counting (T_3)** for later use in the calculations.

9.4.16. Count the samples on the same day as they are precipitated for a minimum of ^{90}Y decay.

10. Counting Protocol for Strontium-90 Samples

10.1. Samples are to be counted within 24 h of the time they were precipitated to lessen the degree of ^{90}Y decay.

NOTE: Samples should not be counted within the first 7 h after the final extraction (T-2) to allow short-lived beta emitters to decay.

10.2. Samples are loaded into the Tennelec LB-4000 four at a time and counted for 200 min.

10.3. If sample activity is twice that of the background, the samples should be recounted 12 - 72 h later for an additional 200 min. Repeat once more if sample counts are again more than twice the background. This checks for contamination in the sample.

10.4. Instrument QA/QC requirements.

10.4.1. Each weekday, run a 200-min background count.

10.4.2. Check instrument efficiency at the beginning of each work week.

10.5. Verify the instrument settings for the Tennelec LB-4000.

- Timer: 200 min.
- HV switches: set at 1350 V. HV is software controlled and should not be applied through the potentiometer on the front of the HV module.
- Power: ON.
- Flow rate of P-10 gas: set between 0.1 and 0.2.

Press the F1 key to start the counters.

10.6. Refer to the Tennelec LB-4000 manual and to count room Method No. CR230 for detailed counting instructions.

11. Calculations

The following calculations of radiometric counting data are performed for determinations made without a radiotracer. Most data values are assumed to have Poisson distributions and all time-measurement errors are assumed to be insignificant.

11.1. Counting efficiency is a function of self absorption of the beta particles in the precipitated sample. A series of 24 Sr-90 samples is prepared with varying amounts of yttrium carrier. The calculated efficiency of the mounted samples is plotted against the mass of the precipitate to construct an efficiency curve as a function of yttrium recovery. A least-squares equation is calculated from the plotted data.

11.1.1. The counting efficiency of the counter for a single background and standard is given by

$$E = \frac{\left(\frac{C_s}{T_s} - B\right)}{A_s \times K} ,$$

where E = efficiency (counts per disintegration),
C_s = gross counts for the standards,
T_s = counting time for standard (min),
B = background count rate (counts/min),
A_s = activity of the standard (dis/min), and
K = the ^{90}Y growth factor times the ^{90}Y decay factor times the Y recovery.

11.1.2. Average efficiency.

$$\overline{E} = \frac{\sum_{i=1}^{n} E_i}{n} ,$$

where $\overline{E}$ = average efficiency,
E_i = individual efficiencies, and
n = number of E_i values.

11.1.3. The standard deviation of $\overline{E}$ is

$$SD(\overline{E}) = \sqrt{\frac{\sum_{i=1}^{n} (E_i - \overline{E})^2}{(n-1)n\overline{E}^2} + \frac{SD(A_S)^2}{(A_S)^2}} ,$$

where $SD(\overline{E})$ = standard deviation of $\overline{E}$ (counts per disintegration),
E_i = counting efficiency,
$\overline{E}$ = average efficiency,
n = number of values used for the efficiency calculation,
A_S = activity of the added standard, and
$SD(A_s)$ = standard deviation of the standard solution activity.

11.2. Background.

11.2.1. The background count rate is

$$B = \frac{C_b}{T_b} ,$$

where B = background count rate (counts/min),
C_b = gross counts for the background, and
T_b = counting time for the background (min).

11.2.2. The standard deviation for the background count rate is calculated by

$$SD\ (B) = \frac{\sqrt{C_b}}{C_b} ,$$

where $SD(B)$ = standard deviation of the background and
C_b = individual background count.

11.3. Sample activity.

11.3.1. The activity of the samples is given by

$$A_x = \frac{\left(\frac{C_x}{T_x} - B\right)}{\overline{E}} ,$$

where A_x = sample activity (dis/min),
C_x = gross counts for the sample,
T_x = counting time for the sample (min),
B = background count rate (counts/min), and
$\overline{E}$ = average counting efficiency.

11.3.2. The standard deviation of the activity of the sample is given by

$$SD\ (A_x) = \frac{\sqrt{C_x}}{C_x} ,$$

where $SD(A_x)$ = standard deviation of sample activity (dis/min) and
C_x = gross counts for the sample,

11.3.3. The lower limit of detection of the activity for high-background instruments is determined to be three times the standard deviation of the background.

$$L_D = \frac{3 \times SD(B)}{K \times T_B} ,$$

where L_D = lower limit of detection,
$SD(B)$ = standard deviation of the background count,
K = constant in sample units corrected for growth and decay, and
T_B = time of the background count.

11.4. Calculation to put the radiometric measurement into the required form for final reporting.

11.4.1. Reported activity.

$$ACT_x = \frac{A_x}{K \times Q \times Y \times D \times G} ,$$

where ACT_x = sample activity in correct units for reporting (usually pCi/L or pCi/g),

A_x = sample activity (dis/min),
K = conversion factor (2.22 pCi per dis/min),
Q = sample quantity analyzed (0.005 L),
Y = yttrium carrier recovery,
D = ^{90}Y decay, and
G = ^{90}Y ingrowth.

11.4.1.1. The ^{90}Y decay is given by

$$D = e^{-\ln 2 (T_3 - T_2) / T_{1/2}} ,$$

where T_3 = midpoint of count time in days,
T_2 = second separation time in days, and
$T_{1/2}$ = half-life of ^{90}Y (days).

11.4.1.2. The ^{90}Y ingrowth is given by

$$G = 1 - e^{-\ln 2 (T_2 - T_1) / T_{1/2}} ,$$

where T_2 = second separation time in days,
T_1 = first separaton time in days, and
$T_{1/2}$ = half-life of ^{90}Y (days).

11.4.2. The propagated uncertainty of the reported activity is

$$U_x = |ACT_x| \times \sqrt{SD(A_x)^2 + SD(E)^2 + SD(Q)^2 + SD(R)^2 + SD(B)^2} ,$$

where U_x = propagated uncertainty of the reported activity,
ACT_x = reported activity;
$SD(A_x)$ = standard deviation of sample activity,
SD(B) = standard deviation of the background,
SD(E) = standard deviation of the efficiency,
SD(Q) = standard deviation of the sample quantity, and
SD(Y) = standard deviation of the yttrium carrier recovery.

11.5. Computer listing. The actual data calculations are calculated by a FORTRAN program within the VAX computer.

12. Proper Waste Disposal Practices

12.1. Liquid waste.

12.1.1. Collect the dodecane-HDEHP solution from Step 9.3.4 and 9.4.7 in a loosely sealed glass bottle, labeled as organic waste.

12.1.2. Discard the acid solution from Step 9.4.4 into the acid waste system.

12.1.3. Discard the supernate from Step 9.4.8 into the acid waste system.

12.1.4. Discard the filtrate from Step 9.4.11.2 into the acid waste system.

12.2. Discard the mounted ^{90}Y sample in the normal waste after two weeks.

12.3. Waste pickup.

12.3.1. Fill out the Waste Profile Request form and send it to EM-7.

12.3.2. Give the approved Waste Profile Request form and waste container to the EM-9 waste coordinator.

12.3.3. The Waste Management Group, EM-7, picks up the waste for disposal in accordance with Laboratory policy in AR 10-3.

13. Source Materials

13.1. *EML Procedures Manual*, 26th ed., H. L. Volchok and G. de Planque, Eds. (Environmental Measurements Laboratory, US Department of Energy, New York, N. Y., HASL-300, 1986).

13.2. M. A. Gautier, E. S. Gladney, and B. T. O'Malley, "Quality Assurance for Health and Environmental Chemistry: 1985," Los Alamos National Laboratory report LA-10813-MS (1986).

13.3. "Prescribed Procedures for Measurement of Radioactivity in Drinking Water," US Environmental Protection Agency, EPA 600-4-80-032, pp. 58-74 (August 1980).

13.4. American Public Health Association, American Waterworks Association, and Water Pollution Control Federation, *Standard Methods for the Examination of Water and Waste Water*, 16th ed. (American Public Health Association, Washington, D.C., 1985).

13.5. Branch Technical Position, Revision I, Regulatory Guide 4.8, Radiological Assessment Branch, Nuclear Regulatory Commission (November 1979).

13.6. "American National Standard for Performance Criteria for Radiobioassay," draft, American National Standards Institute, ANSI N13.30 (1989).

13.7. L. A. Currie, "Limits for Qualitative Detection and Quantitative Determination," *Anal. Chem.* **40**, 586-593 (1968).

13.8. "Standard Methods for the Examination of Water and Waste Water," R. Popper, Ed. (American Public Health Association, 1976).

13.9. "Chemical, Hazardous, and Mixed Waste," Administrative Requirement 10-3, in *Environment, Safety, and Health Manual*, Los Alamos National Laboratory Manual, Chapter 1 (most recent edition).

Revisions or additions to the procedure are marked (▒▒▒). Where a section heading is marked the entire section has been revised.

STRONTIUM-90 DATA SHEET

Request No._____ T-1_____(date/time) Y Carrier (mg)_____

Owner_____ T-2_____(date/time)

Matrix_____ Ingrowth Factor_____ Technician_____

Sample No.	Aliq. (g or l)	Eff	Y Carrier Rec		Filters (mg) Gross	Tare	Net	Sample Count	Sample cpm	Blank cpm	T-3 (date/time)	Decay Factor	Count Time(min)	Activity(pCi)
								First						
								Second						
								Third						
								First						
								Second						
								Third						
								First						
								Second						
								Third						
								First						
								Second						
								Third						

Data File _____

Control File _____

Storage Disk No. _____

Log Book Page No._____

Fig. 1. Strontium-90 data sheet

THORIUM-230 IN GEOLOGICALS — ALPHA SPECTROMETRY

Analyte: Thorium-230	**Method No.:** ER200
Matrix: Soils, rocks, sediments, and ores	**Minimum Detectable Concentration:** 0.02 pCi/sample
Procedure: Anion exchange and alpha spectrometry	**Accuracy and Precision:** 100% ± 8% above 10 pCi/g
Effective Date: 01/01/85	**Authors:** Richard J. Peters Ernest S. Gladney

SAFETY NOTE: Before beginning this procedure, read all of the Material Safety Data Sheets for the chemicals listed in Sec. 7. Read Sec. 4.3 of the EM-9 Safety Manual for information on personal protective clothing and equipment.

1. Principle of Method

1.1. Thorium is chemically separated from geological matrices by anion exchange. Separated samples are electroplated and counted by alpha spectrometry.

2. Sensitivity

2.1. Alpha spectrometry detection limits are approximately 0.02 pCi/sample. Detection limits for this procedure are about 0.002 pCi/g using a 10-g sample.

3. Accuracy and Precision

3.1. Performance data for ^{230}Th in geological materials are listed below. No certified values have yet been proposed by the Canadian Certified Reference Materials Project (CCRMP). It is reasonable to assume that ^{230}Th should be near equilibrium with the ^{226}Ra, and this is used as our basis of comparison for establishing the validity of our data.

Reference Material	^{230}Th (pCi/g) EM-9			^{226}Ra (pCi/g) CCRMP Certified		
BL-1	79	±	3	75	±	4
BL-2	1560	±	70	1490	±	30
BL-3	3400	±	200	3330	±	70
BL-4	596	±	14	566	±	12
BL-5	25000	±	2000	23400	±	520
DH-1	430	±	25	578	±	12
DH-1a	660	±	50	859	±	30
DL-1	14.1	±	1.5	13.2	±	0.7
DL-1a	40	±	3	38.2	±	1.1

Reference materials DH-1 and DH-1a are thorium ores and all other materials are uranium ores. It is extremely important to correct the ^{228}Th tracer activity for naturally occurring ^{228}Th. This correction was not done for the data shown above, resulting in underestimation of the ^{230}Th concentrations in the two thorium ores that have substantial levels of ^{228}Th.

4. Interferences

4.1. Radium-224 provides a direct alpha interference with the ^{228}Th tracer peak. Samples should be electroplated as soon after anion exchange as possible and then counted as soon after electroplating as possible to minimize this interference.

4.2. Thorium-228 is formed naturally in the ^{232}Th decay chain. It will cause a positive interference with the tracer peak, resulting in an underestimate of the ^{230}Th content of the sample. It is especially important to measure the natural ^{228}Th content before adding tracer to samples that have high levels of total thorium.

5. Collection and Storage of Samples

5.1. There are no special collection or storage requirements.

6. Apparatus

6.1. Graduated cylinders: 25-, 1000-, and 2000-mL.

6.2. Bottles: 500-mL, polyethylene.

6.3. Stirring bars: 1.5-in., Teflon-coated.

6.4. Beakers: 100-, 250-, and 1000-mL, Pyrex.

6.5. Hot plates: magnetic stirring, Corning Model No. PC-351.

6.6. Beakers: 600-mL, Teflon.

6.7. Transfer pipettes.

6.8. Wash bottles: 16-oz, polyethylene.

6.9. Plastic wrap for covering beakers.

6.10. Ion exchange columns: glass, typically around 197 mm long by 7 mm i.d. with a 100-mL reservoir at the top and a tip tapered to 2 mm i.d. (see Fig. 1).

6.11. Rack for holding several columns.

6.12. Glass wool.

6.13. Fume hood.

6.14. Tongs.

6.15. Filters: glass fiber, Whatman GF/A.

6.16. Crucibles: 30-mL, platinum with covers.

6.17. Electrodeposition apparatus: equipped with a dc power supply to provide up to 500 mA of regulated current to each electrolytic cell.

6.18. Electrolytic cell: glass cell body 2.22-cm-o.d. by 1.9-cm-i.d., 5.2-cm-long. A 2.22-cm-diam stainless steel plate is held in place on one end of the glass cell body by a "rubber band" created by removing approximately 1.5 cm of the closed end of a rubber "finger-cot" and cutting a 0.5-cm hole in it. This is then stretched over the plate and up onto the glass cell body, holding the plate tightly in place with a liquid-tight seal. A platinum electrode of 1.9-cm-diam is press-fitted into the top of the glass cell body.

6.19. Alpha spectrometer: equipped with a 1024 channel analyzer using 300-mm^2 silicon-surface barrier detectors.

6.20. Stainless steel disks: 2.20-cm (7/8-in.) disk fabricated from 15 to 20-mil 316 stainless steel, cold rolled or No. 4 finish. Plating area is 1.59-cm (5/8-in.).

7. Reagents

7.1. Nitric acid (concentrated, reagent-grade).

7.2. Nitric acid (7.2 M). Dilute 2750 mL of concentrated HNO_3 to 6 L with deionized water.

7.3. Methyl alcohol.

7.4. Hydrofluoric acid (concentrated 48%, reagent-grade).

7.5. Hydrochloric acid (concentrated, reagent-grade).

7.6. Hydrochloric acid (8 M). Dilute 333 mL of concentrated HCl to a total volume of 1000 mL with distilled water.

7.7. Hydrochloric acid (0.1 M). Dilute 8 mL of concentrated HCl to a total volume of 1000 mL with distilled water.

7.8. Perchloric acid (concentrated 70%, reagent-grade).

7.9. Hydrogen peroxide (30%).

7.10. Anion exchange resin. AG 1-X8, 50-100 mesh, chloride form, Bio-Rad Laboratories, Richmond, California. Prepare resin for use by soaking the resin with distilled water and storing it in a squeeze bottle.

7.11. Ammonium hydroxide (1%). Dilute 15 mL of concentrated NH_4OH with distilled water to a total volume of 500 mL.

7.12. Ammonium oxalate (4% solution). Dissolve 40 g of ammonium oxalate crystals in 1000 mL of distilled water. This solution is stable for one month.

8. Calibration and Standards

8.1. Calibration of the alpha spectrometer.

8.1.1. The alpha secondary standards contain the isotopes ^{238}Pu, ^{239}Pu, and ^{241}Am and are standardized in a gas-flow proportional counter using the National Bureau of Standards (NBS) Standard Reference Material (SRM) 4906-B17, the ^{238}Pu primary standard.

8.1.2. Calibration counts are made for 1020 s. Determine the efficiency of each detector by integrating the counts in 19 channels (12 channels to the left of the peak and 6 channels to the right of the peak) of the energy spectrum of each of the three isotopes.

8.1.3. Background counts are accumulated for each energy spectrum for each detector for 60,000 s.

8.2. The thorium-230 standard is obtained from the Environmental Protection Agency (EPA). Dilute to 100 dpm.

8.3. The thorium-228 tracer solution is obtained from Amersham. Dilute to 100 dpm.

9. Procedure

9.1. Sample preparation.

9.1.1. Evaluation of natural ^{228}Th interference.

9.1.1.1. Dry and grind 100 g of sample to produce a homogenous mixture.

9.1.1.2. Weigh 100 g of sample into a 500-mL polyethylene bottle and submit for gamma-ray counting. Determine the natural ^{228}Th from its 2614-keV line.

9.1.2. Geological sample dissolution.

9.1.2.1. Weigh a 10-gm aliquot of the soil sample into a 500-mL polyethylene bottle. Add 1 mL of ^{228}Th tracer solution.

9.1.2.2. Add 200 mL of concentrated HNO_3 to the soil sample.

CAUTIOUSLY add the first few drops because carbonate soils react vigorously.

9.1.2.3. Add 200 mL of 48% HF.

CAUTION: Hydrofluoric acid is extremely hazardous. Wear rubber gloves, eye protection, and a lab coat. Completely clean up all spills and wash thoroughly after using HF. Make all HF transfers in an exhaust fume hood to avoid toxic fumes.

9.1.2.4. Place a 1.5-in. Teflon-coated stirring bar in the bottle and loosely cap. The cap must be loose enough to permit generated gases to escape (principally SiF_4 and nitrous oxides) and prevent pressure build-up.

9.1.2.5. Place the bottle in a 1-L beaker of water on a magnetic stirring hot plate and stir the sample overnight with heating.

NOTE: A 1-L beaker on a Corning Model No. PC-351 hot plate set at "2" can be left unattended for 15 h (overnight).

9.1.2.6. Transfer the contents of the polyethylene bottle into a 600-mL Teflon beaker and boil the mixture to dryness.

9.1.2.7. While the sample is drying, rinse the bottle with 200 mL of concentrated HCl. Save the HCl rinse until Step 9.1.2.6 is completed.

9.1.2.8. Pour the HCl rinse into the Teflon beaker after the HNO_3 has been evaporated off. Retrieve the stirring bar and discard the bottle.

9.1.2.9. Evaporate the mixture in the Teflon beaker to approximately 10 mL.

9.1.2.10. Add 100 mL of concentrated HNO_3 and boil to remove the HCl.

9.1.2.11. **CAUTIOUSLY** add 30% H_2O_2 a few drops at a time to oxidize any organic residue. Add HNO_3 and H_2O_2 until the solution is light yellow and clear.

9.1.2.12. Evaporate the sample until the first sign of precipitation appears (about 25-50 mL depending on the sample).

9.1.2.13. Oxidize the sample by adding 35-50 mL of concentrated $HClO_4$.

9.1.2.14. Take the mixture to dryness on high heat.

CAUTION: This step requires CONSTANT attention.

9.1.2.15. Add a few drops of concentrated HCl and 100 mL of 7.2 N HNO_3 to the beaker to dissolve the residue. Cover the beaker with plastic wrap until ready for anion exchange separation.

9.2. Anion exchange separation.

9.2.1. Place a plug of glass wool into the bottom of the labeled anion exchange column. Fill the column with 1 to 2 in. of AG 1-X8 anion exchange resin (50-100 mesh, chloride form).

9.2.2. Wash the column reservoir with 2 to 3 column volumes of 7.2 M HNO_3.

9.2.3. When the liquid is approximately 0.5 cm above the resin bed, gently pour the sample into the column and let the solution drain to the top of the resin bed into a clean, labeled, 100-mL beaker.

9.2.4. Rinse the sample beaker with approximately 1 column volume of 7.2 M HNO_3. Pour the rinse into the column reservoir, and let it drain to the top of the resin bed.

9.2.5. Rinse the column with 1 to 2 column volumes of 7.2 M HNO_3 and drain. Discard the column eluent.

9.2.6. Place a clean beaker under the column and elute the thorium with 20 mL of 8 M HCl.

9.2.7. Proceed to the electrodeposition step as soon as possible to minimize interference from ^{224}Ra.

9.3. Electrodeposition.

9.3.1. Evaporate the sample solution on medium heat until a dry spot appears that cannot be covered by swirling the beaker. Allow the beaker to cool.

9.3.2. Electrodeposition cell preparation.

9.3.2.1. Clean a stainless steel planchet with methyl alcohol.

9.3.2.2. Engrave the sample number on the back of the planchet.

9.3.2.3. Place the planchet on the bottom of an electrodeposition tower and hold it in place with a rubber gasket. Rinse the cell with distilled water to check for leaks.

9.3.3. Add 3 mL of 4% ammonium oxalate solution to the beaker. Transfer this solution to an electrodeposition cell with 0.1 M HCl until the cell is approximately half filled.

9.3.4. Allow the current to flow for 30 min at 1 A.

9.3.5. With the current still on, quench the reaction by filling the cell with 1% NH_4OH solution. Remove the cell from the electrodeposition apparatus.

9.3.6. Empty the cell and rinse the stainless steel planchet with water followed by a rinse with methyl alcohol.

9.3.7. Heat the planchet to a dull red color in the flame of a bunsen burner.

9.3.8. Allow the planchet to cool, place in a labeled envelope, and submit for alpha counting.

9.3.9. Count as soon as possible after electroplating to minimize interference from ^{224}Ra.

10. Operation of Equipment

10.1. Refer to the operating manual for the alpha spectrometer.

11. Calculations

11.1. Count the samples for 80,000 s. Determine the counts for each of the three isotopes by integrating the counts in 19 channels for each energy region.

11.2. Calculate the thorium concentration of the sample.

11.2.1. Correct the tracer for naturally occuring ^{228}Th in the sample.

$$X = \frac{S}{S + R} ,$$

where X = fraction of ^{228}Th gamma activity due to the tracer,
S = net counts in standard 2614-keV ^{228}Th gamma-ray, and
R = net counts in sample's 2614-kev ^{228}Th gamma-ray.

11.2.2. Determine the chemical recovery.

$$RF = \frac{(Cs - Cb) \times X}{T \times D \times S} ,$$

where RF = recovery factor for the ^{228}Th tracer,
Cs = ^{228}Th sample counts,
Cb = ^{228}Th background counts,
X = ^{228}Th fraction from tracer (corrected for sample contribution),
T = count length (min),
D = detector counting efficiency, and
S = concentration of the ^{228}Th standard (dpm).

11.2.3. Determine the concentration of ^{230}Th in the sample.

$$C = \frac{Cs - Cb}{T \times D \times RF \times W \times 2.22} ,$$

where C = concentration of ^{230}Th in the sample (pCi/g),
Cs = ^{230}Th sample counts,
Cb = ^{230}Th background counts,
T = counting time (min),
D = detector counting efficiency,
RF = recovery factor for the ^{228}Th tracer,
W = sample weight (g), and
2.22 = factor used to convert dpm to pCi.

11.2.4. Uncertainties are usually reported based only on counting statistics.

12. Source Materials

12.1. R. J. Peters and E. S. Gladney, "Determination of Thorium-230 in CCRMP Reference Samples by Alpha Spectroscopy," *Geostandards Newsletter* **7**, 319-320 (1983).

12.2. M. A. Gautier, E. S. Gladney, and B. T. O'Malley, "Quality Assurance for Health and Environmental Chemistry: 1985," Los Alamos National Laboratory report LA-10813-MS (1986).

12.3. E. Holm, "Review of Alpha-Particle Spectrometric Measurements of Actinides," *Int. J. Radiat. Isot.* **35**, 285-290 (1984).

12.4. R. L. Williams, "A Computerized Alpha-particle Spectrometry System for the Analysis of Low-Level Thorium, Uranium, Plutonium, and Americium Fractions," *Int. J. Radiat. Isot.* **35**, 271-277 (1984).

12.5. *EML Procedures Manual*, 26th ed., H. L. Volchok and G. de Planque, Eds. (Environmental Measurements Laboratory, US Department of Energy, New York, New York, HASL-300, 1986).

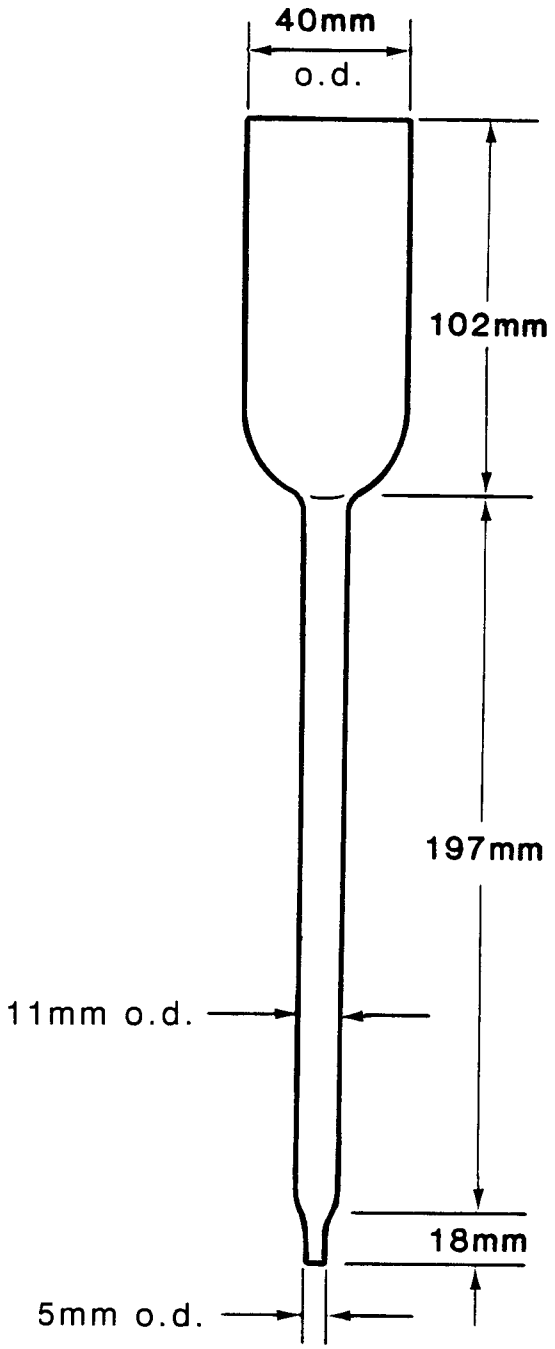

Fig. 1. Ion exchange column.

TRITIUM IN ENVIRONMENTAL MATRICES — DISTILLATION PROCEDURE

Analyte: ^3H as tritiated water	**Method No.:** ER210
Matrix: Air, soil, biologicals, and water	**Minimum Detectable Activity:** 2.5 pCi total activity, or 500 pCi/L per 5-mL sample
Procedure: Distillation and liquid scintillation counting	**Accuracy and Precision:** 97% ± 14%
Effective Date: 04/15/84	**Author:** Richard J. Peters George H. Brooks

SAFETY NOTE: Before beginning this procedure, read all of the Material Safety Data Sheets for the chemicals listed in Sec. 7. Read Sec. 4.3 of the EM-9 Safety Manual for information on personal protective clothing and equipment.

1. Principle of Method

1.1. Tritiated water is distilled from the sample and pipetted directly into a polyethylene liquid scintillation vial to which a scintillation cocktail is added. Decay of ^3H is observed by liquid scintillation.

2. Sensitivity

2.1. Sensitivity is limited by count length and the detector background.

2.2. For routine measurements with a 60-min count length, the minimum detection limit (3 sigma above background) is 2.5 pCi of total activity. This equals 500 pCi/L for distilled 5-mL water samples. The minimum detectable level for air samples with a total air volume of 10.2 m^3 and a silica gel mass of 15 g equals 0.7 pCi/m^3.

3. Accuracy and Precision

3.1. There are no reference materials available from any agency for tritium in biological or silicate matrices.

3.2. There are no National Institute of Standards and Technology (NIST) Standard Reference Materials (SRMs) for dilute tritium in water. Both Environmental Protection Agency (EPA) and Environmental Measurements Laboratory (EML) quality assurance programs circulate intercomparison samples of tritium in water. We also prepare QC in-house materials for tritium in water and soil.

Over a period of six years the determination of tritium in these QC materials had a mean recovery of 97% ± 14% on 892 measurements.

4. Interferences

4.1. Low-energy activity from other isotopes in the sample may result in positive interference.

4.2. Light-absorbing or light-scattering materials may result in negative interference (quenching).

4.3. Interferences from Steps 4.1 and 4.2 are minimized as follows.

4.3.1. Distill samples that were previously analyzed without distillation.

4.3.2. Simple redistillation is probably not effective for samples that were previously distilled. Redistillation using an oxidizing agent such as potassium permanganate and refluxing may eliminate volatile organic codistillates.

4.3.3. The addition of standard known quantities of tritium to previously counted samples and recounting is another method.

4.4. Internal luminescence of the samples or cocktail may result in positive interference.

4.4.1. This interference is usually reduced by permitting samples to equilibrate in the chilled, dark counting chamber of the liquid scintillation counter for 2 h prior to actual counting.

4.4.2. Repetitive counting of samples to determine the half-life for "long-lived" luminescence and calculation of a correction factor is a second method for reducing this form of interference.

5. Collection and Storage of Samples

5.1. There are no special collection and storage requirements for water samples.

5.2. Water vapor from air samples is collected on silica gel and distilled by Group EM-8. Samples are received as 5-mL aliquots in scintillation vials containing 15 mL of cocktail.

5.3. Freeze biologicals and soils at the time of collection and thaw just before distillation.

NOTE: These samples must **NOT** be air or oven dried.

6. Apparatus

6.1. Beakers: 50-, 600-, and 1000-mL, Pyrex.

6.2. Scintillation counting vials: 25-mL, polyethylene, with plastic caps.

6.3. Pipette: Oxford Macro, with 5-mL disposable tips.

6.4. Hot plates.

6.5. Watch glasses.

6.6. Filter apparatus with 0.45-micron membrane.

6.7. Centrifuge tubes: 50-mL, glass.

6.8. Liquid scintillation counter: Packard Model 2200CA & 2500TR.

6.9. Kimwipes.

6.10. Heating mantels.

6.11. Round bottom flasks: 250-mL.

6.12. Distillation apparatus.

7. Reagents

7.1. Liquid scintillation cocktail: Ultima-Gold or other similar commercial product. Evaluate each new lot number to assure reproducibility of results.

7.2. Low-tritium-background water.

7.3. Methanol.

7.4. Potassium permanganate.

8. Calibration, Quality Assurance Materials, and Blanks

8.1. Calibration

8.1.1. In order to provide accurate analysis for each type of matrix encountered, matrix-specific calibration curves must be established.

8.1.1.1. Prepare a set of 10 samples within the matrix-specific liquid scintillation cocktail (10 mls for the bioassay program, and 15 mls for the environmental program).

8.1.1.2. All samples will be overspiked with equal levels of H-3 standard (determine the amount that will provide adequate counting statistics within a reasonably short time frame).

8.1.1.3. Prepare a concentrated salt solution (5 gms NaI + 40 mL DI H20); this is the quench agent.

8.1.1.4. Vary the amount of quench agent that is added to each of the 10 samples (usually ranging from 0 to 70 lambda).

8.1.1.5. Count the samples in the liquid scintillation counting system. Utilize the appropriate counting protocol for the matrix of interest (i.e., Bioassay or Environmental program).

8.1.1.6. When initializing the liquid scintillation system, provide the appropriate input for the quench curve program. This will require the amount of standard added to the samples, the decay date of the standard, and any cursory information that may be added to the comment field.

8.1.1.7. After the counting cycle is complete, the quench curve information may need to be copied to the counting protocols (for the 2200CA counting system), or the information is utilized automatically (for the 2500TR counting system).

8.2. Quality Assurance Materials

8.2.1. Open Quality Assurance Materials

8.2.1.1. Prepare a set of samples that match the matrix of interest, in the sample to cocktail load.

8.2.1.2. Make several sets of various overspikes utilizing a NIST H-3 standard, 4361B-57. Suitable activity ranges are 100 - 1000 pCi/L for the Environmental program, and 1000 - 10,000 pCi/L for the Bioassay program.

8.2.1.3. Document the activity levels in the various QC's as a permanent marking upon the samples.

8.2.1.4. These samples can be run with any sample set. The information gathered from the analysis of these samples will provide the count room personnel with a high degree of probability that the current set of samples that were analyzed were completed within acceptable analytical limits.

8.2.2. Blind Quality Assurance Materials

8.2.2.1. Blind QA samples are usually run with every set. These samples are provided by the sample receiving section within EM-9. The QC's are provided with the sample set, the specific samples are unknown to the analyst.

8.2.2.2. The samples are run with the routine samples. The exact nature of the samples are not known until the final data reduction and report generation has taken place.

8.3. Blanks

8.3.1. Matrix blanks should be run with every set.

8.3.1.1. Four (4) sets of three (3) blanks should be generated for each matrix. Obtain some deep well water for the blank substrate.

8.3.1.2. Run one set of three (3) with each sample set, at the beginning of the set. These samples will then be utilized within the data reduction program.

9. Procedure

9.1. Soil samples (see Fig. 1).

9.1.1. Fill a 600-mL beaker approximately 2/3 with soil from which water is to be distilled.

9.1.2. Place a 50-mL beaker into the center of the soil so that about half of the depth of the beaker is buried in the soil.

9.1.3. Place a clean watch glass on top of the 600-mL beaker and seal around the edge with plastic wrap.

9.1.4. Place ice in the watch glass and put the whole assembly on a hot plate. Set heat to maximium. Water will distill from the soil, condense on the under side of the watch glass, and drip into the 50-mL beaker.

9.1.4.1. Additional ice may be needed in the watch glass as the distillation proceeds.

9.1.4.2. If the soil is wet, use a lower heat setting on the hot plate to keep soil from spattering into the collected water.

9.1.5. Collect approximately 10 mL of water.

9.1.6. Pipet a 5-mL aliquot into the counting vial.

9.1.7. Add 15 mL of scintillation cocktail to the vial and cap tightly. Shake the vial vigorously for a few seconds.

9.1.8. Label the cap of the scintillation vial with the sample number and submit to the counting facility for liquid scintillation counting.

9.2. Drinking water.

9.2.1. Filter the sample through a 0.45-micron membrane filter.

9.2.2. Pipette 5 mL of the filtrate into a 25-mL glass scintillation vial.

9.2.3. Proceed with Steps 9.1.7 to 9.1.8.

9.3. Sewage or turbid water.

9.3.1. If a gross alpha/beta determination has also been requested on these samples, measure 900 mL of the sample into a 1-L beaker. If only tritium is to be determined on these samples, use approximately 30-mL of sample in a 50-mL beaker.

9.3.2. Place the beaker on a hot plate.

NOTE: If a series of samples are placed in beakers at the same time, cover each beaker with plastic wrap to prevent cross contamination.

9.3.3. Place a large collection flask in a ring stand to one side of the hot plate turned so that the pouring spout of the collection flask is to the right of the beaker (Fig. 2). Cover the sample beaker and collection flask with plastic wrap except for a small section by the pouring spout.

9.3.4. Place a 50-mL beaker on a stand directly under the pouring spout of the collection flask to collect the water that will condense in the flask. Collect approximately 10 mL of water.

9.3.5. If the distillate is clear, proceed with Steps 9.1.6 to 9.1.8.

9.3.6. If the distillate is colored, redistill over potassium permanganate using reflux conditions. Note on the sample logsheet that this may be a problem sample requiring standard addition for quantitative analysis.

9.3.7. When the water collection is complete, rinse the collection flask with water and then with methanol. It is important that the collection flask be completely dry before using it for the next sample distillation.

9.3.8. If a gross alpha/beta determination has been requested, proceed with Step 9.4.1 of Method No. ER100.

9.4. Biological samples.

9.4.1. Analyze fresh or frozen samples that have **NOT** been air or oven dried. Fill a 600-mL beaker approximately 2/3 full with the biological sample from which water is to be distilled.

9.4.2. Proceed as in Steps 9.1.2 and 9.1.3.

9.4.3. Place ice in the watch glass and put the whole assembly on a hot plate (Fig. 1). Begin the distillation with a low heat setting "2" and increase the temperature slowly, being careful to minimize charring of the sample. The water will distill from the sample, condense on the underside of the watch glass, and drip into the 50-mL beaker. Additional ice may be needed in the watch glass as the distillation proceeds.

9.4.4. Collect at least 6 mL of water. Achieving the preferred minimum of 10 mL may be very difficult for some types of biological samples.

9.4.5. If the sample is clear, proceed with Steps 9.1.6 to 9.1.8.

9.4.6. If the distillate is colored, redistill the sample over potassium permanganate using reflux conditions. Note on the sample logsheet that this may be a problem sample requiring standard addition for quantitative analysis. Proceed with Step 9.1.6 to 9.1.8.

9.5. Silica Gel Cartridges.

9.5.1. Obtain the necessary number of centrifuge tubes. Mark the top of each tube with the sample number.

9.5.2. Weigh each centrifuge tube (with the cap on) to determine a tare weight of the tube. Use the styrofoam holders that the tubes come in as a stand to hold them on the balance.

9.5.3. Set up the condensing system in the hood. This will require that the supply line be connected to the cold water supply. Raise the pressure of the water to provide an adequate flow through the condenser.

9.5.4. Carefully open the first silica gel cartridge. Empty the contents of the cartridge, through a funnel, into the round bottom flask held within the heating mantel.

9.5.5. Replace the top of the condenser onto the round bottom flask. Place the other end of the condenser in the centrifuge tube. All the condensate will collect within this tube.

9.5.6. Turn on the rheostat, then the switch.

NOTE: It is very important that the rheostat not be turned on in excess of 78% of the dial reading. The heating mantels are extremely susceptible to high voltages, and will cause the unit to fail prematurely.

9.5.7. It should take approximately 20-30 min. for the mantel to reach the optimum temperature. You should notice a small amount of condensate within the condenser. If this is not seen, or the tube is cool to the touch, determine whether or not the unit is plugged in, or the rheostat is working.

9.5.8. When the silica gel becomes a deep blue (cobalt in color), most (99%) of the moisture has been driven off, and into the centrifuge tube. Turn off the rheostat and the switch.

9.5.9. Remove the condenser and pour out the silica gel into a beaker. Let it cool before it is replaced within the cartridge.

9.5.10. Repeat Steps 9.5.4. to 9.5.9. for each successive sample.

9.5.11. Weigh each completed sample to determine the gross weight. Subtract the tare weight from the gross weight to determine the net weight of the sample. Record this weight, it will be required in the final report.

9.5.12. Proceed with Steps 9.1.6. to 9.1.8.

10. Operation of Instrument

10.1. Loading the liquid scintillation counter.

10.1.1. Tighten the lid on the scintillation vial and shake vigorously to ensure complete mixing of the sample and cocktail.

10.1.2. Wipe the outside of the vial with a Kimwipe and place the vial in the scintillation counter sample tray.

10.1.3. Write the sample number in the appropriate position on the tritium counting data sheet (Fig. 3).

10.1.4. Repeat the above procedure with the tray containing the standards and blanks. This tray should have the appropriate program indicator.

10.1.5. Place the samples within the sample tray in the following order: The three (3) blanks, two samples, then the open QC's, then the remaining samples.

10.1.6. Place the samples within the liquid scintillation instrument, and let cool for approximately 1/2 hour before beginning the count sequence. This will eliminate, or at least minimize the effects of photoluminescent reactions.

10.2. To begin the counting sequence, depress the **F2** key on the 2200CA system, or the **GREEN** button on the 2500 TR system. This will automatically load and count the samples, providing both a hard copy, and a disk file for later transferral to the VAX system.

10.3. Simultaneously press the **ENABLE** and **FORWARD** keys on the counter to begin counting.

10.4. For further information concerning the operation of the instrument systems, refer to the EM-9 Nuclear Counting Facilities Operating Procedures manual, procedure CR180.

11. Calculations

11.1. Calculations of radiometric counting data for determinations are made without a radiotracer. Most data values are assumed to have Poisson distributions and all time-measurement errors are assumed to be insignificant.

11.2. Counting efficiency.

11.2.1. The counting efficiency of the counter for a single standard run is calculated by the counter using an external standard and an established quench correction curve.

11.3. Background.

11.3.1. Background decompositions per minute are calculated by the counter. The calculation program averages three backgrounds for background.

11.3.2. The running average background count rate is calculated by

$$\overline{B} = \frac{\Sigma_1^3 B}{3}$$

where B = background count rate,
$\overline{B}$ = average background count rate, and

11.3.3. The standard deviation for the average background count rate is calculated by:

$$SD(B) = \frac{3 \times \sqrt{C_b}}{B}$$

where $SD(\overline{B})$ = standard deviation of the running average of the background,
$\overline{B}$ = average background from Step 11.3.2,
B = individual background count rate, and
n = number of values used.

11.4. Sample activity.

11.4.1. The activity in the samples is given by:

$$A_x = (A - \overline{B})$$

where A_x = net sample activity (dpm/sample), and
A = gross sample dpm from the counter.

11.4.2. The standard deviation of the activity in the sample is given by:

$$\frac{3x \sqrt{A_x}}{A}$$

where $SD(A_x)$ = standard deviation of sample activity (dpm), and
A = gross sample dpm.

11.4.3. The minimum detectable activity for high-background instruments is determined to be three times the standard deviation of the background:

$$MDA = \frac{3 \times SD(B)}{K},$$

where MDA = minimum detectable activity (dpm),
SD (B) = standard deviation of the background count rate (cpm), and
K = constant in sample units.

11.5. Calculation to put the radiometric measurement into the required form for final reporting.

11.5.1. Reported activity.

$$R_x = \frac{A_x}{K \times Q} ,$$

where R_x = sample activity in correct units for reporting (pCi/L),
A_x = sample activity (dpm),
K = conversion factor (2.22 pCi/dpm), and
Q = sample quantity analyzed (0.005 L).

11.5.2. The propagated uncertainty of the reported activity is

$$U_x = |R_x| \times \sqrt{SD\,(A_x)^2 + SD\,(\overline{B})^2 + \frac{SD\,(Q)^2}{Q^2}} ,$$

where U_x = propagated uncertainty of the reported activity,
R_x = reported activity,
$SD\,(A_x)$ = standard deviation of sample activity,
$SD\,(\overline{B})$ = standard deviation of the average background,
$SD\,(Q)$ = standard deviation of the sample quantity aliquoted, and
Q = sample quantity aliquoted in reporting units.

12. Resources

12.1. M. A. Tamers, "Liquid Scintillation Counting of Low Level Tritium," Packard Technical Bulletin No. 12 (June 1964).

12.2. M. A. Gautier, E. S. Gladney, and B. T. O'Malley, "Quality Assurance for Health and Environmental Chemistry: 1985," Los Alamos National Laboratory report LA-10813-MS (1986).

12.3. "American National Standard for Performance Criteria for Radiobioassay," draft, American National Standards Institute, ANSI N13.30 (1989).

12.4 L. A. Currie, "Limits for Qualitative Detection and Quantitative Determination," *Analytical Chemistry* **40**, 586-593 (1968).

Revisions or additions to the procedure are marked (▒). Where a section heading is marked, the entire section has been revised.

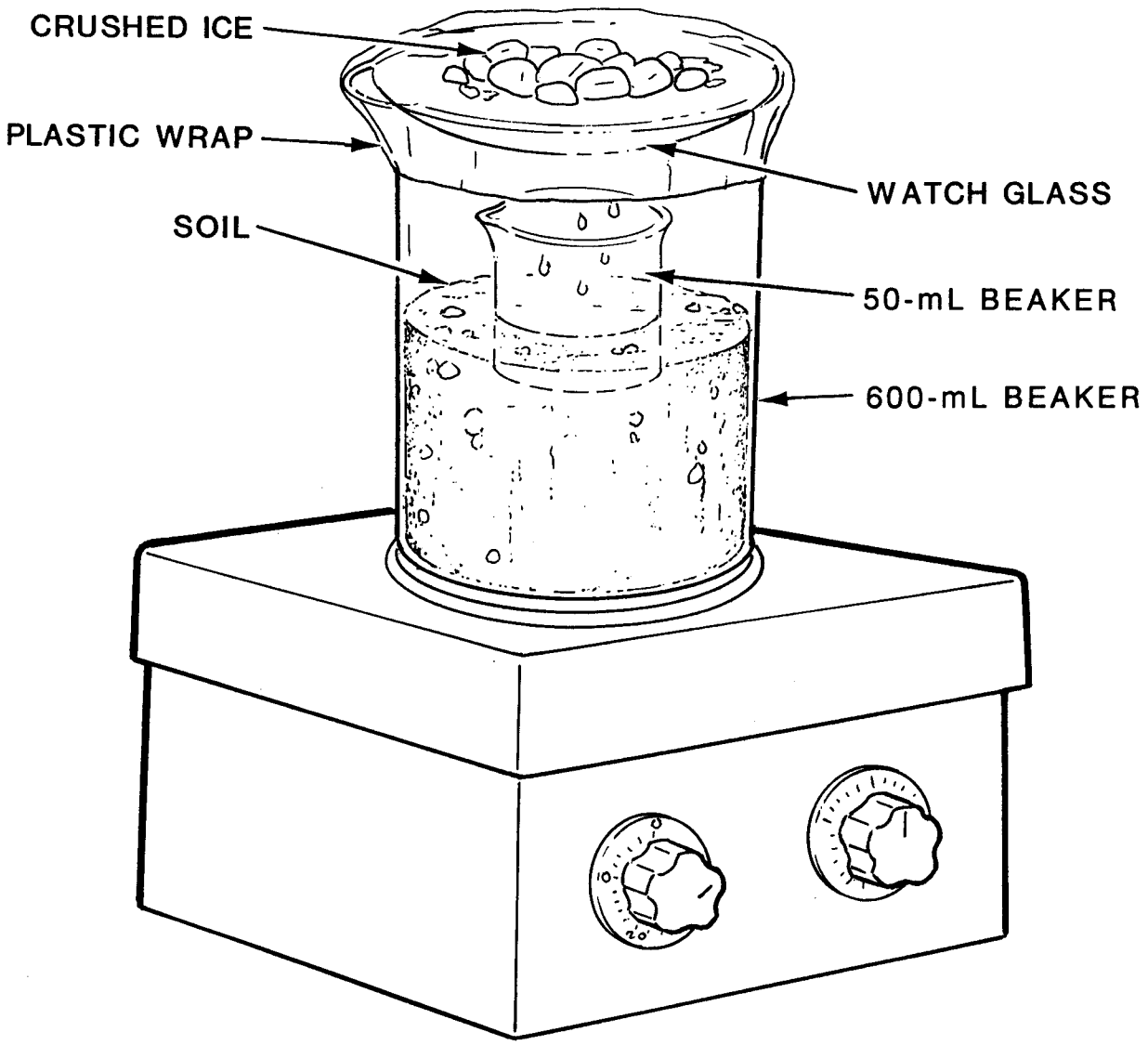

Fig. 1. Distillation apparatus for soil samples.

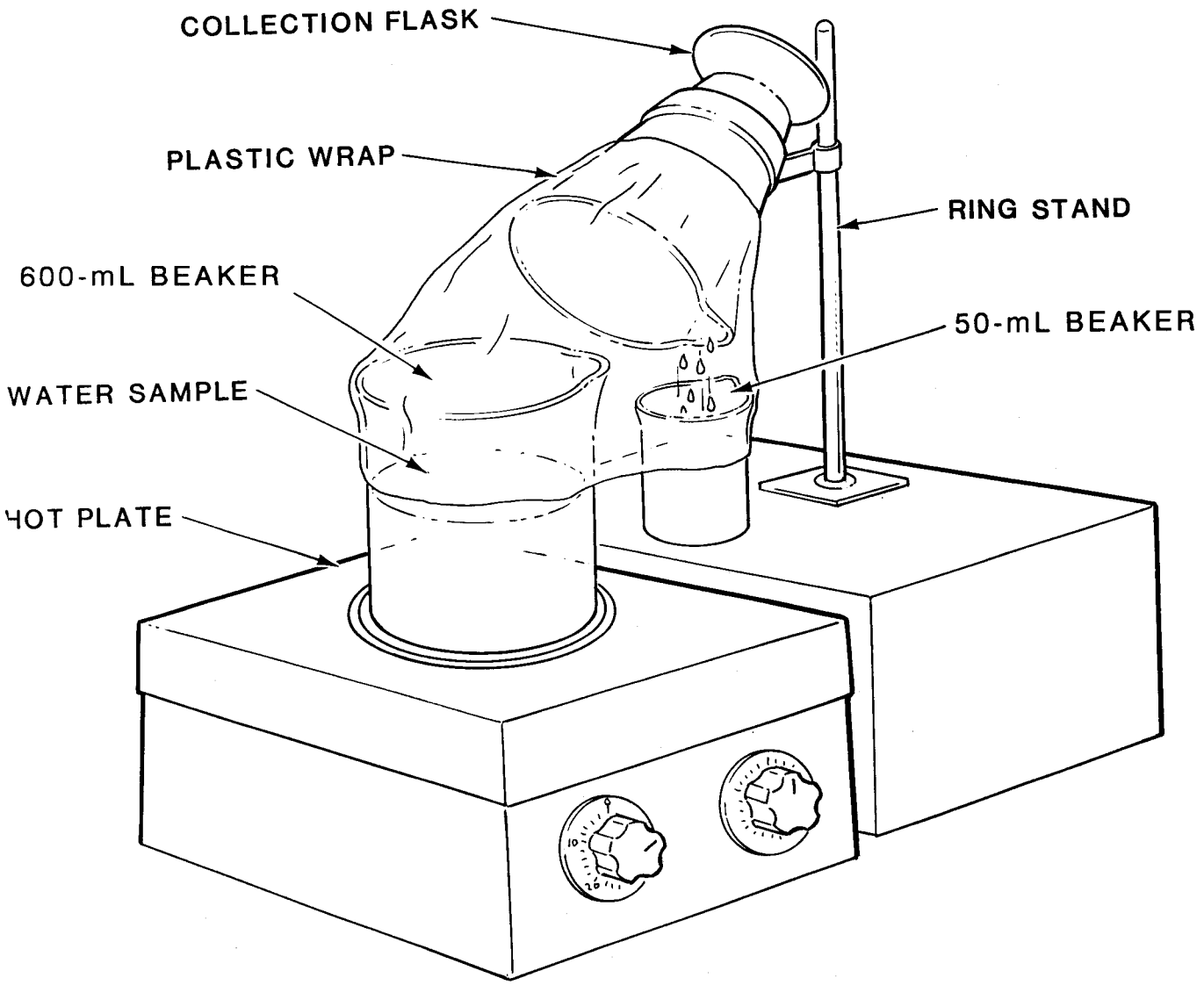

Fig. 2. Distillation apparatus for sewage or turbid water.

Program #= 5 01/05/90 13:21

REGION A: LL-UL= 0- 19 LCR= 0 BKG= .00 % 2 SIGMA= .0

REGION B: LL-UL= 2- 19 LCR= 0 BKG= .00 % 2 SIGMA= .0

REGION C: LL-UL= 0- 0 LCR= 0 BKG= .00 % 2 SIGMA= .0

TIME= 30.00 K= .033 QIP=SIE/AEC

P#	S#	Time	CPMA/K	%DEV	CPMB/K	%DEV	CPMC/K	%DEV	SIE	SIS	MIN
5	1	30.00	585.86	8.30	537.37	8.67	.00	.00	793.	26.121	32
5	2	30.00	585.86	8.30	549.49	8.57	.00	.00	789.	26.032	63
5	3	30.00	494.95	9.04	459.60	9.38	.00	.00	781.	27.242	94
5	4	30.00	429.29	9.70	416.16	9.85	.00	.00	557.	27.493	125
5	5	30.00	480.81	9.17	459.60	9.38	.00	.00	557.	27.316	157
5	6	30.00	469.70	9.27	445.45	9.52	.00	.00	558.	27.880	188
5	7	30.00	149783.	.52	137031.	.54	.00	.00	561.	13.092	219
5	8	30.00	1084.85	6.10	998.99	6.36	.00	.00	559.	20.483	250
5	9	30.00	1239.39	5.71	1149.50	5.93	.00	.00	558.	19.838	281
5	10	30.00	1144.44	5.94	1062.63	6.17	.00	.00	558.	20.602	312
5	11	30.00	487.88	9.10	463.64	9.34	.00	.00	575.	26.037	344
5	12	30.00	457.58	9.40	434.34	9.64	.00	.00	574.	26.943	375
5	13	30.00	443.43	9.55	415.15	9.87	.00	.00	576.	25.930	406
5	14	30.00	500.00	8.99	478.79	9.19	.00	.00	576.	26.611	437
5	15	30.00	454.55	9.43	428.28	9.71	.00	.00	572.	26.366	468
5	16	30.00	2546.46	3.98	2344.44	4.15	.00	.00	586.	16.822	500
5	17	30.00	458.59	9.39	439.39	9.59	.00	.00	574.	27.297	531
5	18	30.00	446.46	9.51	424.42	9.76	.00	.00	566.	27.158	562
5	19	30.00	505.05	8.94	486.87	9.11	.00	.00	573.	26.746	593
5	20	30.00	459.60	9.38	423.23	9.77	.00	.00	569.	26.180	624

Fig. 3. Tritium counting data sheet.

URANIUM-235/URANIUM-238 RATIO IN GEOLOGICALS AND NATURAL WATERS — RTNA

Analyte: $^{235}U/^{238}U$	**Method No.:** ER230
Matrices: Soils, rocks, sediments, ores, and natural waters	**Minimum Detectable Isotopic Ratio:** 0.0001
Procedure: Preirradiation separation of uranium, and thermal neutron activation analysis	**Accuracy and Precision:** ± 3% at natural isotopic abundance
Effective Date: 01/01/85 to 06/01/90	**Authors:** Ernest S. Gladney Richard J. Peters

SAFETY NOTE: Before beginning this procedure, read all of the Material Safety Data Sheets for the chemicals listed in Sec. 7. Read Sec. 4.3 of the EM-9 Safety Manual for information on personal protective clothing and equipment.

1. Principle of Method

1.1. Uranium of unknown isotopic composition is chemically separated from silicate or aqueous matrices by solvent extraction and ion exchange. Following thermal neutron irradiation, ^{235}U is measured by way of fission-product decay and ^{238}U by way of the decay of ^{239}Np formed from the complete decay of ^{239}U.

1.2. This procedure is intended to supplement, rather than replace, both mass spectrometry and alpha spectrometry for uranium ratio determination in environmental samples. It is more precise than alpha spectrometry, and more cost-effective for large numbers of samples than thermal ionization mass spectrometry. Recent development of inductively coupled plasma mass spectrometry may render this neutron-activation-based procedure less cost-effective.

2. Sensitivity

2.1. Uranium-235/Uranium-238 ratios in the range of 0.0001 to 190 can be measured.

2.2. About 20 μg of total uranium is required in the final separated sample for an accurate determination.

3. Accuracy and Precision

3.1. Accuracy and precision are a function of the isotopic ratio. At the extreme limits of the procedure's range, ± 10% can be maintained on certified standards. For $^{235}U/^{238}U$ ratios in the range of 0.004 to 100, ± 5% can be maintained on certified standards.

3.2. Performance data for $^{235}U/^{238}U$ in spiked water samples.

EM-9 Value			Certified Value
0.0036	±	0.0002	0.0036
0.0047	±	0.0001	0.0047
0.0071	±	0.0001	0.0073 (natural)
1.010	±	0.0060	1.014
11.77	±	0.35	11.36

3.3. Performance data for $^{235}U/^{238}U$ in silicate materials.

Material	EM-9 Value			Certified Value
NBS 610	0.0025	±	0.0002	0.00238
NBS 612	0.0023	±	0.0001	0.00239
USGS GXR-1	0.0073	±	0.0003	0.0073 (natural)
CCRMP SO-1	0.0074	±	0.0001	0.0073 (natural)
SO-2	0.0075	±	0.0001	0.0073 (natural)
SO-4	0.0074	±	0.0002	0.0073 (natural)
DL-1	0.0071	±	0.0005	0.0073 (natural)

4. Interferences

4.1. Both Na and Br have activation products with half-lives comparable to ^{239}Np and the ^{235}U fission products of interest. Both Na and Br are common in environmental materials. Bromine is not extracted during the solvent extraction and the sodium is not retained during anion exchange. It is important to minimize the Na and Br blanks in the material on which the preseparated uranium solution is evaporated for neutron irradiation.

5. Collection and Storage of Samples

5.1. Water samples should be immediately filtered and acidified to 1% with concentrated HCl.

5.2. There are no special collection and storage requirements for geologicals.

6. Apparatus

6.1. Graduated cylinders: 25-mL, 1- and 2-L.

6.2. Bottles: 500-mL, polyethylene.

6.3. Stirring bars: 1.5 in., Teflon-coated.

6.4. Beakers: 100-, 250-, and 1000-mL.

6.5. Hot plates: magnetic stirring, Corning Model No. PC-351.

6.6. Beakers: 600-mL, Teflon.

6.7. Separatory funnels: 250-mL, with extra stopcocks.

6.8. Rack: to hold 4 to 6 separatory funnels.

6.9. Timer: equipped with a second hand.

6.10. Transfer pipettes.

6.11. Wash bottles: 500-mL, polyethylene.

6.12. Plastic wrap: for covering beakers.

6.13. Ion exchange columns: glass, typically around 197 mm long by 7.0 mm i.d. with a 100-mL reservoir at the top and a tip tapered to 2 mm i.d. (see Fig. 1).

6.14. Rack for holding several columns.

6.15. Glass wool.

6.16. Polycarbonate film.

6.17. Micro weigh boats.

6.18. Automatic pipettor: 3-mL.

6.19. Pipettes: 20-μL, Eppendorf.

6.20. Fume hood.

6.21. Small irradiation containers: conical tip, size 00, polyethylene, Beem capsules, Ladd Research Industries, Burlington, VT.

6.22. Reactor irradiation rabbits: 4-mL, polyethylene.

6.23. Thermal neutron irradiation facility: Omega West Reactor.

6.24. Tongs.

6.25. Gamma-ray spectrometer: equipped with high-resolution Ge(Li) detector.

7. Reagents

7.1. Nitric acid (concentrated, reagent-grade).

7.2. Nitric acid (7.2 M). Dilute 2750 mL of concentrated HNO_3 to 6 L with deionized water.

7.3. Nitric acid (0.1 M). Dilute 13 mL of 7.2 M HNO_3 to 1000 mL with deionized water.

7.4. Acetic acid (concentrated, reagent-grade).

7.5. Ammonium acetate.

7.6. Anion exchange resin. Chelex-100, 100-200 mesh, sodium form, Bio-Rad Laboratories.

7.7. Hydrofluoric acid (concentrated 48%, reagent-grade).

7.8. Hydrochloric acid (concentrated, reagent-grade).

7.9. Hydrochloric acid (8 M). Dilute 667 mL of concentrated HCl to 1000 mL with deionized water.

7.10. Hydrochloric acid (1 M). Dilute 83 mL of concentrated HCl to 1 L with deionized water.

7.11. Perchloric acid (concentrated 70%, reagent-grade).

7.12. Hydrogen peroxide (30%).

7.13. Ammonium nitrate crystals.

7.14. Ammonium nitrate solution (saturated). Add a large excess of ammonium nitrate crystals to deionized water.

7.15. Hexone (4-methyl-2-pentanone).

7.16. Cleaning solution. Prepare a 50:50 mixture of concentrated HNO_3 and concentrated HCl.

NOTE: When preparing the acid cleaning solution, always add the densest liquid last (in this case HNO_3) and stir.

7.17. Anion exchange resin. AG 1-X8, 100-200 mesh, chloride form. Bio-Rad Laboratories. Prepare resin for use by soaking the resin with deionized water and storing in a squeeze bottle.

8. Calibration and Standards

8.1. Gamma-ray spectrometer calibration technique is described in Sec. 8 of Method No. ER130.

8.2. Standard preparation.

8.2.1. National Institute of Standards and Technology (NIST) Uranium Isotopic Standards U-0002 through U-970 and Standard Reference Material (SRM) 950b (Uranium Oxide) are used exclusively for the preparation of standard solutions. The isotopic ratios for these standards are listed below.

NIST SRM	$^{235}U/^{238}U$	NIST SRM	$^{235}U/^{238}U$
U-0002	0.000176	U-200	0.251
U-005	0.00492	U-350	0.546
NBS 950b	0.00725	U-500	0.9997
U-010	0.0101	U-750	3.166
U-015	0.0156	U-800	4.266
U-020	0.0208	U-850	6.148
U-030	0.0314	U-900	10.375
U-050	0.0528	U-930	17.349
U-100	0.1136	U-970	186.78
U-150	0.181		

8.2.2. Dissolve 117-mg portions of U_3O_8 of the various isotopic compositions in 10 mL of concentrated HNO_3 in new 50-mL beakers on a hot plate.

8.2.2.1. Dilute to 100 mL in volumetric flasks with high-purity distilled water. Stock solutions are now 1000 μg/g total uranium.

8.2.2.2. Discard beakers in the radioactive waste container to avoid any possibility of isotopic cross-contamination.

8.2.3. Isotopic standards intermediate to those available from NIST can be prepared by mixing known volumes of the stocks prepared in Step 8.2.2. For example, a depleted uranium standard with $^{235}U/^{238}U = 0.0018$ (typical of residue from DOE enrichment facilities) can be made by mixing 1 part NBS 950b stock with 3 parts NIST U-0002 stock.

8.2.4. Place 5- by 5-cm polycarbonate film squares (cut from rolls of "unpunched" Nuclepore filter film) in small polyethylene weighing boats and pipette 1 mL of high-purity distilled water onto the film. Add 25 μL of 1000-μg/g uranium isotopic standard solutions to the water and let dry.

8.2.5. Roll up each dry standard and insert it into a small Beem vial. Intersperse two standards of differing isotopics among each six samples. This yields two 4-mL rabbits for simultaneous irradiation. Each irradiation must have a set of standards.

9. Procedure

9.1. Quality control materials.

9.1.1. Most natural matrix materials from NIST, the United States Geological Survey (USGS), and the Canadian Certified Reference Materials Project (CCRMP) are assumed to be of natural isotopic composition and may be used directly.

9.1.2. NIST SRMs 610 to 616 (Trace Elements in Glass) contain depleted uranium. The isotopics are specified on the certificates. These make excellent QC materials for the depleted end of the spectrum.

9.2. Sample preparation.

9.2.1. Water samples.

9.2.1.1. Since most natural waters have uranium concentrations of less than 10 μg/L, a 30-L sample is required.

9.2.1.2. Uranium is preconcentrated from this 30-L volume by anion exchange of the UO_2 complex on Chelex-100.

9.2.1.3. Place a plug of glass wool into the bottom of a labeled anion exchange column. Slurry Chelex-100 with distilled water and fill the column with a 1- to 2-in. resin bed. Wash the column with 10 column volumes of high-purity distilled water to remove any extraneous uranium.

9.2.1.4. Buffer each water sample with 20 g of ammonium acetate and 25 mL of concentrated acetic acid.

9.2.1.5. Siphon water samples through Chelex-100 columns at approximately 2 mL/min. Siphoning provides for largely unattended operation.

9.2.1.6. Elute uranium from Chelex-100 columns with 100 mL of 1 N HCl. Cover the beaker and proceed to Step 9.4.

9.2.2. Geological sample dissolution.

9.2.2.1. Weigh a 10-g aliquot of the soil sample into a 500-mL polyethylene bottle.

9.2.2.2. Add 200 mL of concentrated HNO_3.

CAUTION: Carefully add the first few drops of HNO_3 because carbonate soils react vigorously.

9.2.2.3. Add 200 mL of 48% HF.

CAUTION: Work in a fume hood. Hydrofluoric acid is extremely hazardous. Wear rubber gloves, eye protection, and a lab coat. Completely clean up all spills and wash thoroughly after using HF.

9.2.2.4. Place a 1.5-in. Teflon-coated stirring bar in the bottle and cap loosely to permit generated gases to escape (principally SiF_4 and nitrous oxides).

9.2.2.5. Place the bottle in a 1-L beaker of water on a Corning Model No. PC-351 hot plate set at "2" to allow for overnight unattended operation. Stir the sample overnight while heating.

9.2.2.6. Transfer contents of the polyethylene bottle into a 600-mL Teflon beaker and boil the mixture to dryness.

9.2.2.7. While the sample is drying, rinse the bottle with 200 mL of concentrated HCl. Save the HCl rinse until Step 9.2.2.6 is completed.

9.2.2.8. Pour the HCl rinse into the Teflon beaker after the HNO_3 has been evaporated. Retrieve the stirring bar and discard the polyethylene bottle.

9.2.2.9. Evaporate the mixture in the Teflon beaker to approximately 10 mL.

9.2.2.10. Add 100 mL of concentrated HNO_3 and boil to remove the HCl.

9.2.2.11. Cautiously add 30% H_2O_2 a few drops at a time to oxidize any organic residue. Add HNO_3 and H_2O_2 until the solution is light yellow and clear.

9.2.2.12. Evaporate the solution until the first sign of precipitation appears. Depending on the sample, the precipitate forms when approximately 25-50 mL of solution remains.

9.2.2.13. Oxidize the sample by adding 35-50 mL of concentrated $HClO_4$.

9.2.2.14. Take the mixture to dryness on high heat.

CAUTION: Hot $HClO_4$ needs **constant** attention.

9.2.2.15. To dissolve the residue, add a few drops of concentrated HCl to the beaker followed by 100 mL of 7.2 N HNO_3.

9.2.2.16. After the solution cools, cover the beaker and set aside for the hexone extraction, Step 9.3.

9.3. Hexone extraction.

9.3.1. Fill a labeled 250-mL separatory funnel with ammonium nitrate crystals (enough to fill a 100-mL beaker about 3/4 full).

9.3.2. Transfer the preconcentrated or dissolved sample to the separatory funnel with enough washes of 7.2 M HNO_3 to bring the final volume to approximately 100 mL.

9.3.3. Add 50 mL of hexone and shake for 3 min, venting the funnel occassionally to release the vacuum which occurs as the solution cools.

If the ammonium nitrate dissolves completely, add more to keep the solution saturated.

9.3.4. Place the separatory funnel in a rack and allow the phases to separate.

9.3.5. Transfer the organic (top) phase containing the U to a clean, labeled, 250-mL separatory funnel using a transfer pipette.

9.3.6. Repeat Steps 9.3.3 to 9.3.5 twice, combining the hexone phases.

9.3.7. Discard the aqueous phase and drain off the additional aqueous phase that may have separated from the hexone.

9.3.8. Add 50 mL of saturated ammonium nitrate solution to the separatory funnel and shake for no more than 30 s. See note in Step 9.3.10.

9.3.9. Allow the phases to separate.

9.3.10. Quickly drain the aqueous (bottom) phase and discard.

NOTE: If the saturated ammonium nitrate is warmer than the hexone phase it is added to, the crystals will probably precipitate. If this happens, you will need to transfer the organic phase into another clean container with a transfer pipette, as was done in Step 9.3.5, instead of draining off the aqueous phase.

9.3.11. Add 50 mL of 0.1 M HNO_3 and shake for 3 min.

9.3.12. Allow the phases to separate.

9.3.13. Drain the aqueous phase containing the uranium into a clean, 250-mL beaker that has been labeled with the sample number.

9.3.14. Repeat Steps 9.3.11 to 9.3.13 twice, combining the aqueous phases.

9.3.15. Stabilize the solution by adding 10 mL of concentrated HCl.

9.3.16. Cover the beaker with plastic wrap and set aside until ready for Step 9.3.19.

9.3.17. Discard used hexone in a beaker reserved for the purpose and dispose of according to proper waste disposal practices.

9.3.18. Rinse the separatory funnels with methanol and deionized water prior to immersing for a few seconds in a 50:50 mix of HCl and HNO_3 cleaning solution. Rinse with deionized water.

9.3.19. Uncover the sample and evaporate to dryness.

9.3.20. Add 5-10 mL of concentrated HNO_3 and boil to remove the HCl.

CAUTIOUSLY add 30% H_2O_2 a few drops at a time to oxidize any organics. The presence of organics is indicated by a brown residue. Add HNO_3 and H_2O_2 until the solution is light yellow and clear.

9.3.21. Again evaporate the solution to dryness and bring the sample up in 5 mL of concentrated HCl. Cover the beaker with plastic wrap until ready for Step 9.4.

9.4. Anion exchange separation.

9.4.1. Place a plug of glass wool into the bottom of a labeled anion exchange column and fill the column with 1 to 2 in. of AG 1-X8 anion exchange resin (100-200 mesh, chloride form). Wash the column with 10 column volumes of high-purity distilled water to remove any extraneous uranium.

9.4.2. Wash the column reservoir with 2 to 3 column volumes of 8 M HCl.

9.4.3. When the liquid is approximately 0.5 cm above the resin bed, slowly pour the sample into the column and let the solution drain to the top of the resin bed into a clean, labeled, 100-mL beaker.

9.4.4. Rinse the sample beaker with approximately 1 column volume of 8 M HCl. Pour the solution into the column reservoir, and let the solution drain to the top of the resin bed into the beaker used in Step 9.4.3.

9.4.5. Rinse the column with 1 to 2 column volumes of 8 M HCl and drain. Save the eluent.

9.4.6. Place labeled 5- by 5-cm polycarbonate film squares over small polyethylene weighing boats and place under the columns to collect the column effluent.

9.4.7. Carefully, without stirring up the resin, add 3 mL of high-purity distilled water to elute the uranium from the column onto the polycarbonate film.

9.4.8. Set the polycarbonate film units aside to air dry.

9.4.9. Rinse the column with 2 to 3 column volumes of high-purity distilled water, rinsing the column reservoir thoroughly.

9.4.10. Relabel the columns and repeat Steps 9.4.2 to 9.4.9 until all samples are completed.

9.4.11. Discard the used resin.

9.4.12. Prepare the irradiation standards as described in Step 8.2.4. Do not perform any chemistry on these standards.

9.5. Sample packaging and irradiation.

9.5.1. Fold each square into halves, then thirds, roll up, and insert into labeled small Beem vials.

9.5.2. Place 3 samples or QCs and one standard into each rabbit so that when the rabbits are paired cap-to-bottom, the 2 standards will be next to each other in the center of the pair. Rabbits are inserted into the pneumatic irradiation tubes with the cap end out. Therefore, place one standard at the cap of the first rabbit in the pair, and the other standard at the bottom of the second rabbit. Indicate the pairing and order of irradiation on the reactor irradiation request form (Fig. 2).

9.5.3. Irradiate rabbits in pairs for 20 to 30 min in the thermal column facilites TCR-2 or TCR-4 at the Omega West Reactor.

9.5.4. Return the irradiated samples to the laboratory and unpack, placing each Beem vial into its own clean rabbit. Be sure to note which standard belonged to which irradiated rabbit. Handle all rabbits and Beem vials with tongs and plastic gloves.

9.6. Nuclear counting.

9.6.1. The samples must be counted within 24 h of irradiation.

9.6.2. Count all samples, QCs, and NIST standards that were irradiated together in the same geometry on the same crystal.

9.6.3. Count the samples for 1000 s each at a spectrometer energy calibration of 1 keV/channel. Check the analyzer dead time for each count. Ensure that it was less than 10%.

9.6.4. Store all gamma-ray spectra on VAX disc for off-line data reduction. Record the filename and all counting data in a Laboratory notebook.

10. Operation of Equipment

10.1. Reactor operation and sample irradiation are the responsibilities of Group INC-5.

10.2. See gamma-ray spectrometry instrument procedure (Method No. ER130).

11. Calculations

11.1. The 278-keV line from ^{239}Np and the 743-keV line from ^{97}Zr are used for quantitation. These gamma-ray peaks are numerically integrated and their peak areas are corrected for decay to the end of the irradiation. The ratio of the corrected areas is taken and compared to the corresponding ratios of the standards.

11.1.1. Integrate the 278- and 743-keV lines in both NIST standards and in all samples for a particular run.

11.1.2. Correct each gamma-ray peak for decay from beginning-of-count back to time-out-of-reactor using the following formula.

$$B = Ae^{\lambda(t1 - t2)} ,$$

where B = decay-corrected peak area,
A = integrated peak area,
λ = decay constant (0.693/half-life of isotope),
t1 = beginning-of-count time, and
t2 = time-out-of-reactor time.

No flux corrections are required since samples and standards are irradiated simultaneously.

11.1.3. Plot the calibration curve on linear graph paper with the known $^{235}U/^{238}U$ isotope ratio on the x-axis and the decay-corrected net peak area ratio R on the y-axis (Fig. 3). Draw a straight line between the two calibration points.

$$R = B1/B2 ,$$

where B1 = decay-corrected net peak area for 743-keV ^{97}Zr, and
B2 = decay-corrected net peak area for 278-keV ^{239}Np.

11.1.4. Read the sample $^{235}U/^{238}U$ ratio from the calibration curve using the decay-corrected net peak area ratio ($^{97}Zr/^{239}Np$). If the sample peak area ratio is outside the two calibration points, do not report a value based upon extrapolation. Rerun the sample with more appropriate standards.

11.2. The 293-keV line of ^{143}Ce can be substituted for the ^{97}Zr fission product. Recent experience indicates that the precision is somewhat poorer. It is important to use a ^{235}U fission product that is not volatile. Although ^{131}I is one of the most prominent fission products, varying quantities are lost during sample irradiation, resulting in nonreproducible isotope ratios.

12. Source Materials

12.1. E. S. Gladney, R. J. Peters, and D. R. Perrin, "Determination of Uranium-235/Uranium-238 Ratio in Natural Waters by Chelex-100 Ion Exchange and Neutron Activation," *Anal. Chem.* **55**, 976 (1983).

12.2. E. S. Gladney, D. B. Curtis, D. R. Perrin, J. W. Owens, and W. E. Goode, "Nuclear Techniques for the Chemical Analysis of Environmental Materials," Los Alamos Scientific Laboratory report LA-8192-MS (1980).

12.3. M. A. Gautier, E. S. Gladney, and B. T. O'Malley, "Quality Assurance for Health and Environmental Chemistry: 1985," Los Alamos National Laboratory report LA-10813-MS (1986).

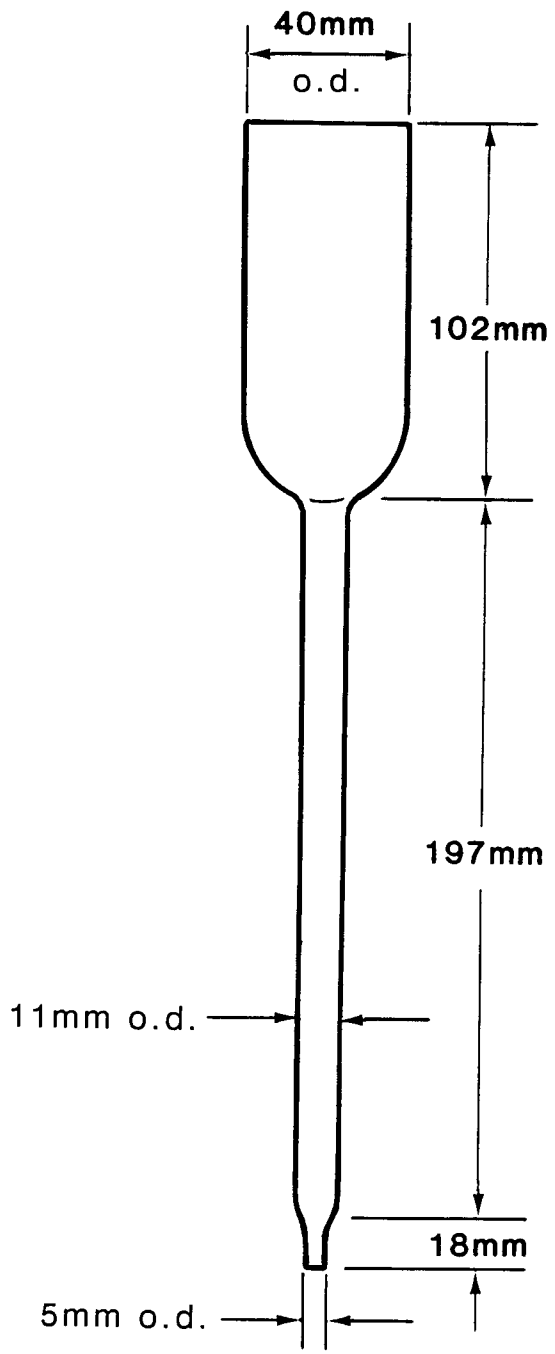

Fig. 1. Ion exchange column.

HSE-9 PROGRAM CODE:_____

MATERIAL:_____ ANALYSIS:_____ REQUESTOR:_____

LENGTH OF IRRADIATION:_____

RABBIT NUMBER	TIME IN	TIME OUT	DATE	REMARKS

Fig. 2. Reactor irradiation request form.

Uranium Isotopic Ratio Calibration

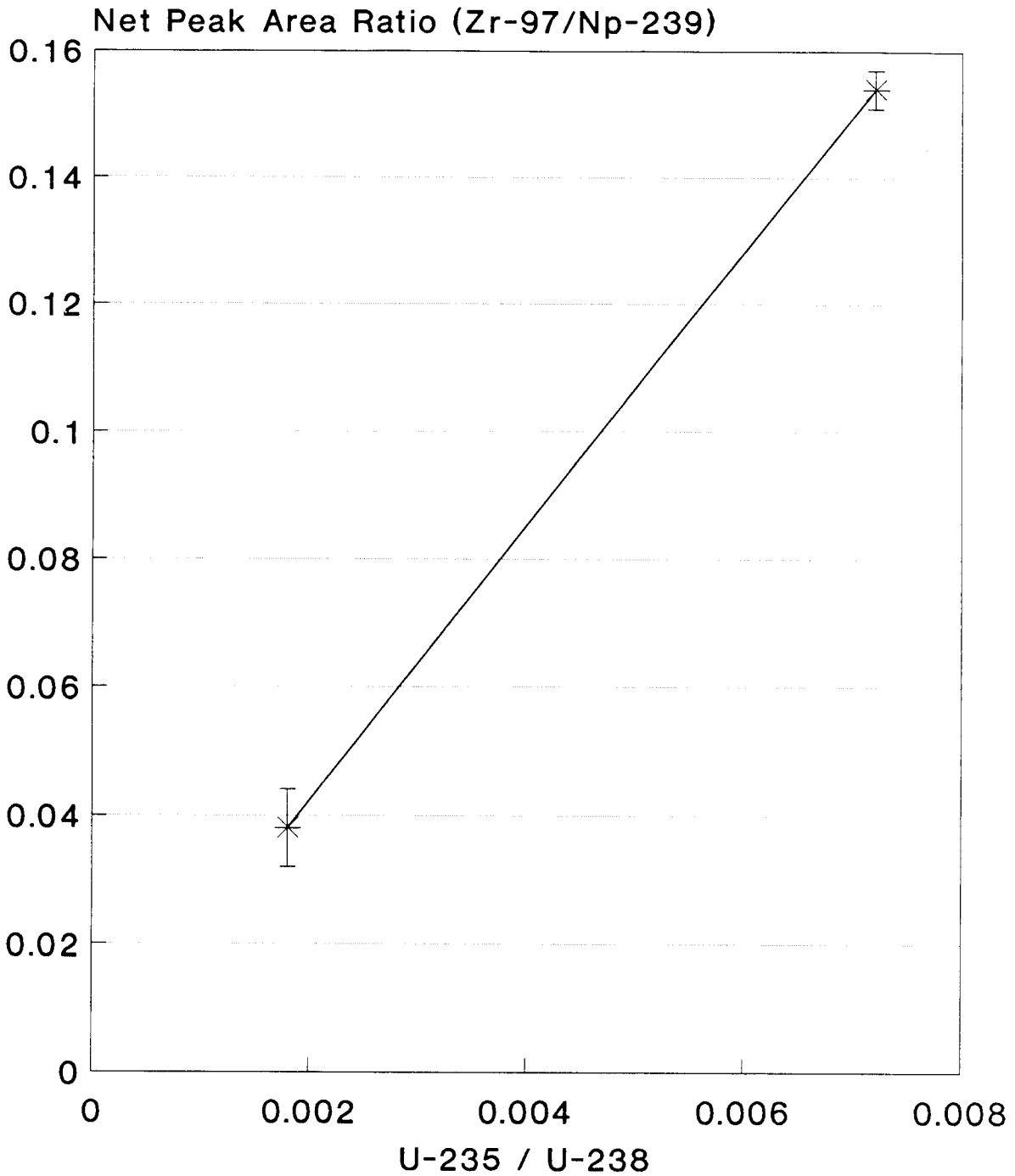

Fig. 3. Uranium isotopic ratio calibration chart.

URANIUM IN AIR FILTERS — DNA

Analyte: Uranium	**Method No.:** ER240
Matrix: Air filters	**Minimum Detectable Concentration:** 10 ng per filter
Procedure: Instrumental delayed neutron activation (DNA) analysis	**Accuracy and Precision:** 100% ± 6%
Effective Date: 01/01/84	**Authors:** Ernest S. Gladney George H. Brooks

SAFETY NOTE: Before beginning this procedure, read all of the Material Safety Data Sheets for the chemicals listed in Sec. 7. Read Sec. 4.3 of the EM-9 Safety Manual for information on personal protective clothing and equipment.

1. Principle of Method

1.1. Air particulates or industial hygiene swipe samples can be collected on almost any type of filter. Certain uranium fission products (primarily from ^{235}U) emit neutrons as their primary decay mode, with a "group" half-life of approximately 54 s. The neutrons from the samples are counted in ^{3}He detectors following a short thermal neutron irradiation.

1.2. Quantitative data on uranium concentrations are obtained by concurrent measurements of filters of known uranium content and isotopic ratio. Some assumptions concerning the uranium isotopic ratio of the samples must be made.

1.3. It is important to employ standards of the same matrix as the samples. Differences in neutron thermalization have been observed among waters, air filters, and biologicals, necessitating the use of matrix-based standards.

2. Sensitivity

2.1. Ten nanograms can normally be detected in the delayed neutron activation (DNA) system for liquid samples. The detection limit is strongly influenced by the precision of the system blank and can increase to 40 ng in the worst case observed. Saturation effects in the detector are insignificant at the 10,000-ng/filter level (see Fig. 1).

3. Accuracy and Precision

3.1. The National Institute of Standards and Technology (NIST) does not produce Standard Reference Materials (SRMs) for uranium on air filters that would permit a clear determination of the accuracy of the method. Since the detector used is geometry-independent for the 25-mL rabbit, small quantities of powdered silicates or NIST 1648 (Urban Particulate Matter) may be added to the filter substrate to produce in-house quality assurance materials. Analysis of replicate samples of this SRM (certified value of 5.5 ± 0.1 ppm) gave a mean value of 5.8 ± 0.8 ppm.

3.2. The Environmental Measurements Laboratory in New York circulates uranium air filter quality assurance materials as part of the Department of Energy Quality Assurance (DOE QA) Program. These samples cannot be accurately analyzed by DNA because they are prepared on glass fiber filters that have high levels of aluminium and sodium, which contribute to serious gamma-ray pulse pile-up losses in the neutron detector.

3.3. In-house quality assurance materials are prepared by pipetting known amounts of uranium standards onto Whatman or Millipore filters. Results for these analyses are consistently within one standard deviation of the spike concentration, which ranges from 0.1-1.0 μg/filter. Over a period of 2 y the determination of uranium in these materials had a mean recovery of 100% ± 6% on 33 measurements.

4. Interferences

4.1. Very high concentrations of fissionable Pu will create positive interference, but this has never been observed in routine air samples.

4.2. High concentrations of Th relative to U can create positive interferences since thorium fission is induced by fast neutrons. The degree of flux thermalization is very important in minimizing this source of interference. Thorium/uranium ratios of 100:1 are needed before the impact can be observed in our DNA system.

4.3. Departure of the U isotopic ratio from that assumed can create either positive or negative interferences. Uranium-238 fissions by fast neutron capture while ^{233}U fissions by thermal neutron capture, which has a different yield of delayed-neutron-emitting products. Some assumptions concerning the isotopic abundance in the samples must be made in order to calculate total uranium concentration. Uranium-235 may be reported directly with no such assumptions required.

4.4. Very large concentrations of high-cross-section isotopes with short-lived activation products can also interfere with uranium determination. High levels of Al, Na, or Cl produce intense gamma-ray fluxes in the detectors, which can

eventually overwhelm the neutron peak by gamma-pulse pile-up. The problem cannot be corrected for, but the spectrum can be monitored for its occurrence and affected data can be rejected. Certain types of air filters (e. g. glass fiber) cannot be analyzed by the DNA technique due to this phenomenon.

4.5. Detector saturation may occur at high concentrations of uranium. This effect is < 1% up to 10 μg/filter of natural isotopic uranium (see Fig. 1).

5. Collection and Storage of Samples

5.1. Use any collection technique that avoids using glass fiber filters. Whatman, Nuclepore, Millipore, or Microsorban filters have been analyzed successfully. Avoid fluoropore filters because the intense radiation from the short-lived fluorine in the filter will probably interfere.

5.2. Store filters in containers that avoid contamination of the filters after collection.

6. Apparatus

6.1. Screw-top lids from polyethylene bottles: 1.75-in. diam, used to support filters during preparation of standards.

6.2. Filter paper: 4.25-cm, Whatman No. 2, used for standard preparation.

6.3. Irradiation rabbits: 25-mL, screw-cap, polyethylene scintillation vials, Packard.

6.4. Nuclear reactor: equipped with a "liquid" delayed neutron facility. The characteristics of the Los Alamos facility are described in detail in Source Material 12.5.

6.5. Pipettes with disposable tips: 50-μL, 1- and 5-mL.

6.6. Hot plate.

6.7. Flasks: 100-mL, volumetric, new.

6.8. Beakers: 50-mL, Pyrex, new.

7. Reagents

7.1. Nitric acid (concentrated, highest purity available).

7.2. Distilled water (highest purity available).

8. Calibration and Standards

8.1. Calibrate the DNA facility by concurrent analysis of known quantities of uranium solution pipetted onto filter paper.

8.2. Standard preparation.

8.2.1. Exclusively use NIST Uranium Isotopic Standards U-0002 through U-970 and NBS SRM 950b (Uranium Oxide, U_3O_8) for the preparation of standard solutions.

8.2.2. Dissolve 117-mg portions of U_3O_8 of the various isotopic compositions in 10 mL of concentrated HNO_3 in new 50-mL beakers on a hot plate. Dilute to 100 mL in volumetric flasks with high-purity distilled water. Stock solutions are now 1,000 μg/g total uranium. Discard beakers in radioactive waste to avoid any possibility of isotopic cross-contamination.

8.2.3. Prepare additional dilutions of the concentrated stock just before actual filter standard preparation.

8.2.3.1. Dilute 2 mL of the stock solution to 100 mL with distilled water in a volumetric flask (2 μg/g total U).

8.2.3.2. Dilute 10 mL of the stock to 100 mL with distilled water in a volumetric flask (10 μg/g total U).

8.2.4. Place 4.25-cm Whatman No. 2 filter papers on 1.75-in. screw-top caps with only the outside portion of the filters touching the cap. Use at least 3 filters for each concentration of standard to be made.

8.2.5. Pipette 50 μL of 2-μg/g and of 10-μg/g isotopic uranium solutions evenly on separate filters. This aliquot is equal to 100 ng total U for the first set and 500 ng total U for the second set. Different isotopic ratios are prepared from different stock solutions of NIST uranium isotopic standards.

8.2.6. Dry the filters for at least 2 h.

8.2.7. Roll up each filter and place in a 25-mL irradiation rabbit.

9. Procedure

9.1. Sample preparation.

9.1.1. Roll up air filters and insert them into 25-mL irradiation rabbits.

9.2. Quality control sample preparation.

9.2.1. Weigh approximately 30 mg of NIST SRM 1648 (Urban Particulate Matter) onto a blank filter of the same type used for the samples.

9.2.2. Roll up the QC air filter and insert it into a 25-mL rabbit.

9.2.3. Quality control samples should equal approximately 10% of the total samples analyzed.

9.3. Blank preparation.

9.3.1. Run at least 3 filter blanks, of the type used for preparation of the standards, with each set of standards.

9.3.2. Run at least 5 filter blanks, of the type used for the samples, with each irradiation set in order to generate a limit of detection for that sample filter type.

9.3.3. Since the standards may be prepared on a different type of filter than the samples are taken on, the two different blank determinations suggested above may be required.

9.4. Sample submission and irradiation.

9.4.1. Stagger the blanks, QCs, and standards evenly throughout the sample set.

9.4.2. Transport the sample set to the Omega West Reactor (TA-2) and submit them directly to the DNA facility operator in Group INC-5. List any special instructions, program code, number of samples, etc. For filter analyses, request that the sample weights in the INC-5 DNA data reduction code be set to 1.00 g, rather than having the filters weighed by the operator.

9.4.3. Sample irradiation and counting are conducted by INC-5 in the "liquid" DNA facility as described in Source Material 12.5. All data reduction is done on-line by INC-5's PDP 11/60. Data are mailed directly to EM-9.

9.4.4. Return the samples to our laboratory after they have been allowed to decay for two weeks. Discard the blanks in radioactive waste. Save the samples until the customer has accepted the data.

9.4.5. Standards and quality control samples may be reused. A two-week decay period is recommended to minimize personnel radiation exposure, but there is no nuclear chemical barrier to immediate reuse if necessary.

10. Operation of Equipment

10.1. Equipment operation is the responsibility of INC-5.

11. Calculations

11.1. The general form of the data received from INC-5 is shown below. If a sample weight of 1.0 g is used, the final result is in ng/filter rather than ppb as stated. The result provided by INC-5 must be recalculated due to highly variable system blanks and the absence of either daily standardization or quality control. Accurate daily determination of the system blank is required because this becomes an important source of error as the detection limit is approached. Most sample filters have uranium concentrations near the system detection limit.

OUTPUT FROM INC-5

Sample	Weight	Peak	Valley	Flux	ppb
861069	1.00	947.	24.	5308	627.6
861070	1.00	1336.	29.	5415	889.6
861071	1.00	403.	120.	5408	231.7

11.2. The peak/valley ratio from the INC-5 data must be calculated for each sample. Ratios that fall below 5.0 indicate excessive gamma-pulse pile-up. Such samples will have to be either diluted and rerun or analyzed by another analytical technique. Data with ratios between 5.0 and 10.0 will have a cautionary note placed in the comment field of the database indicating that the results may be suspect. Data with ratios greater than 10.0 should be accurate.

11.3. Calculate the system calibration factor from the following equation:

$$K = \frac{A \times F}{(P - B)},$$

where K = calibration factor (an average K will usually be calculated using multiple standards),
A = concentration of U standard (μg/filter),
F = reactor flux during irradiation of the standard,
P = gross counts in neutron peak of the standard, and
B = average gross counts in neutron peak of blanks.

11.4. Final U results are calculated by INC-5 using the following formula:

$$U = \frac{(P - B) \times K}{W \times F},$$

where U = concentration of uranium in the sample (μg/L),
P = gross counts in neutron peak of sample,
B = average gross counts in neutron peak of blanks,
W = sample volume (L),
F = reactor flux during irradiation of the sample, and
K = system calibration factor from Step 11.3.

11.5. Overall uncertainty is reported as the propagated sum of uncertainties from individual parts of the calculation process.

11.5.1. Calculate the counting uncertainty as follows:

$$D = \frac{\sqrt{P + B}}{P},$$

where D = counting uncertainty in total counts,
P = gross counts in the neutron peak of sample, and
B = average gross counts in the neutron peak of blanks.

11.5.2. Calculate the uncertainty in the calibration factor as follows:

E = standard deviation among all K factors for the same run,

where E = calibration uncertainty, and
K = calibration factors from Step 11.3.

11.5.3. Calculate the uncertainty in the reactor flux as follows:

$$H = \frac{\sqrt{F}}{F},$$

where H = uncertainty in reactor flux, and
F = reactor flux.

11.5.4. The final propagated uncertainty is calculated as follows:

$$V = U \times \sqrt{D^2 + E^2 + H^2} \quad ,$$

where V = overall uncertainty (μg/L),
U = result from Step 11.4 (μg/L),
D = counting uncertainty,
E = calibration factor uncertainty, and
H = reactor flux uncertainty.

11.6. All sample calculations assume natural uranium isotopic abundance unless otherwise specified by the customer. In the latter case, the $^{235}U/^{238}U$ ratio must be determined by another analytical method and the data adjusted as follows:

$$T = \frac{I}{R} \times U \quad ,$$

where T = adjusted total uranium concentration in the sample (μg/g),
I = $^{235}U/^{238}U$ ratio in natural materials (0.0072),
R = $^{235}U/^{238}U$ ratio measured in the sample, and
U = uranium concentration in the sample from Step 11.4 (μg/L).

12. Source Materials

12.1. M. A. Gautier, E. S. Gladney, and B. T. O'Malley, "Quality Assurance for Health and Environmental Chemistry: 1985," Los Alamos National Laboratory report LA-10813-MS (1986).

12.2. "American National Standard for Performance Criteria for Radiobioassay," draft, American National Standards Institute, ANSI N13.30 (1989).

12.3. Currie, L. A., "Limits for Qualitative Detection and Quantitative Determination," *Anal. Chem.* **40**, 586-593 (1968).

12.4. S. Amiel, "Analytical Applications of Delayed Neutron Emission in Fissionable Elements," *Anal. Chem.* **34**, 1683-1692 (1962).

12.5. S. Amiel, J. Gilet, and D. Heymann, "Uranium Content of Chondrites by Thermal Neutron Activation and Delayed Neutron Counting," *Geochim. Cosmochim. Acta* **31**, 1499-1503 (1967).

12.6. G. R. Keepin, T. F. Wimett, and R. K. Zeigler, "Delayed Neutrons from Fissionable Isotopes of Uranium, Plutonium, and Thorium," *Phys. Rev.* **107**, 1044-1049 (1957).

12.7. S. J. Balestrini, J. P. Balagna, and H. O. Menlove, "Two Specialized Delayed Neutron Detector Designs for Assays of Fissionable Elements in Water and Sediment Samples," *Nucl. Instru. Methods* **136**, 521-524 (1976).

12.8. E. S. Gladney, D. B. Curtis, D. R. Perrin, J. O. Owens, and W. E. Goode, "Nuclear Techniques for the Chemical Analysis of Environmental Materials," Los Alamos Scientific Laboratory report LA-8192 MS (1980).

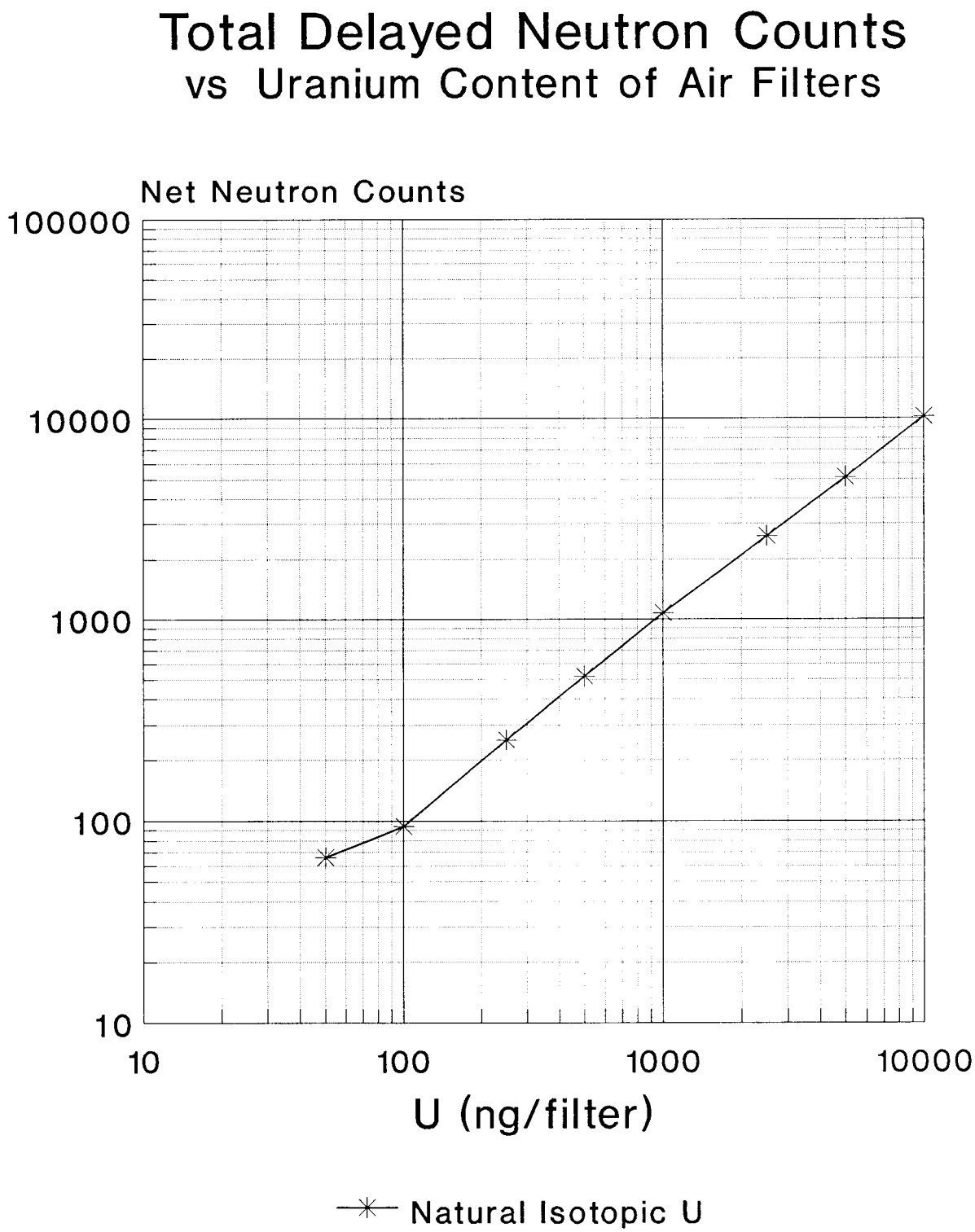

Fig. 1. Total delayed neutron counts vs uranium content of air filters.

URANIUM IN BIOLOGICAL MATRICES — DNA

Analyte: Uranium	**Method No.:** ER250
Matrix: Wet or dry biologicals	**Minimum Detectable Concentration:** 0.5 ng/g
Procedure: Instrumental delayed neutron activation (DNA) analysis	**Accuracy and Precision:** 102% ± 11%
Effective Date: 01/01/84	**Authors:** Ernest S. Gladney Daniel R. Perrin George Brooks

SAFETY NOTE: Before beginning this procedure, read all of the Material Safety Data Sheets for the chemicals listed in Sec. 7. Read Sec. 4.3 of the EM-9 Safety Manual for information on personal protective clothing and equipment.

1. Principle of Method

1.1. Biological materials of almost any type can be analyzed for uranium. Dried vegetation, wet tissue, ashed tissue, and foods have been subjected to delayed neutron activation (DNA) at Los Alamos. Certain uranium fission products (primarily from ^{235}U) emit neutrons as their primary decay mode, with a "group" half-life of about 54 s. The neutrons from the samples are counted in ^{3}He detectors following a short thermal neutron irradiation.

1.2. Quantitative data on uranium concentrations are obtained by concurrent measurements of biological standards of known uranium content and isotopic ratio. Some assumptions concerning the uranium isotopic ratio of the samples must be made.

1.3. It is important to employ standards in the same matrix as the samples. Differences in neutron thermalization have been observed among waters, air filters, and biologicals, necessitating the use of matrix-based standards.

2. Sensitivity

2.1. Ten nanograms can normally be detected in 20-g samples in the DNA system for liquid samples. The detection limit is strongly influenced by the precision of the system blank and can increase to 40 ng. Saturation effects in the detector are insignificant at the 10,000-ng uranium level.

3. Accuracy and Precision

3.1. The method is independent of sample size or shape (geometry) for 25-mL rabbits.

3.2. There are several National Institute of Standards and Technology (NIST) Standard Reference Materials (SRMs) with certified or informational values for uranium in dry vegetation, foods, oyster tissue, and bovine liver. Our results for these materials are consistently within 1 standard deviation of the certified mean concentrations, which range from 1 to 500 ng/g of natural isotopic uranium. Over a period of 5 y the determination of uranium in these reference materials had a mean recovery of 102% ± 11% on 98 measurements. Uranium concentrations in NIST biological SRMs determined by DNA are listed below.

NIST SRM	EM-9 Value (ng/g)	NIST Certified Value (ng/g)
1570 Spinach	45.0 ± 0.8	46 ± 9
1571 Orchard Leaves	30.6 ± 0.6	29 ± 5
1573 Tomato Leaves	63 ± 3	61 ± 3
1575 Pine Needles	18 ± 6	20 ± 4
1577 Bovine Liver	0.99 ± 0.25	0.8
1567 Wheat Flour	0.95 ± 0.24	—
1568 Rice Flour	0.89 ± 0.22	—
1569 Brewers Yeast	470 ± 20	490 ± 20[a]

[a]Consensus value.

4. Interferences

4.1. Very high concentrations of fissionable Pu will create positive interference, but this has never been observed in routine biologicals.

4.2. High concentrations of Th relative to U can create positive interferences since thorium fission is induced by fast neutrons. The degree of flux thermalization is very important in minimizing this source of interference. Thorium/uranium ratios of 100:1 are needed before the impact can be observed in our DNA system. This is an unlikely source of interference since thorium is normally not abundant in biological materials.

4.3. Departure of the U isotopic ratio from that assumed can create either positive or negative interferences. Uranium-238 fissions by fast neutron capture while ^{233}U fissions by thermal neutron capture, which has a different yield of delayed-neutron-emitting products. Some assumptions concerning the isotopic abundance in the samples must be made in order to calculate the total uranium

concentration. Uranium-235 may be reported directly with no such assumptions required.

4.4. Very large concentrations of high-cross-section isotopes with short-lived activation products can also interfere with uranium determination. High levels of Al, Na, or Cl produce intense gamma-ray fluxes in the detectors that can eventually overwhelm the neutron peak by gamma-pulse pile-up. The problem cannot be corrected for, but the spectrum can be monitored for its occurrence and data thus affected can be rejected. Smaller masses of the sample can be rerun in an effort to reduce the pulse pile-up to manageable levels.

4.5. Detector saturation will occur at high uranium concentrations. This effect is 1% at natural uranium concentrations up to 10 μg/g.

5. Collection and Storage of Samples

5.1. Freeze wet biologicals upon collection to prevent deterioration due to natural decomposition processes. Samples may also be ashed. Vegetations and foods may be oven dried.

5.2. Store samples in containers that avoid contamination of the biological materials.

6. Apparatus

6.1. Irradiation rabbits: 25-mL, screw-cap, polyethylene, scintillation vials, Packard.

6.2. Nuclear reactor: equipped with a "liquid" delayed neutron facility. The characteristics of the Los Alamos facility are described in detail in Source Material 12.5.

6.3. Drying and ashing ovens.

6.4. Hot plate.

6.5. Flasks: 100-mL, glass, volumetric, new.

6.6. Beakers: 50-mL, Pyrex, new.

6.7. Pipettes with disposable tips: 50- and 100-μL, 1- and 5-mL.

6.8. Freezer for wet biological storage.

7. Reagents

7.1. Nitric acid (concentrated, highest purity available).

7.2. Distilled water (highest purity available).

7.3. Calcium nitrate (uranium-free).

8. Calibration and Standards

8.1. Calibrate the DNA facility by concurrent analysis of known quantities of uranium added to distilled water, of known quantities of uranium added to dry vegetation, or of weighed amounts of NIST SRM 1569 (Brewers Yeast), which has an unusually high uranium content for a biological material. Use the standard matrix that best matches the samples (e.g. water for wet tissue, etc.).

8.2. Standard preparation.

8.2.1. Exclusively use NIST Uranium Isotopic Standards U-0002 through U-970 and NBS SRM 950b (Uranium Oxide, U_3O_8) for the preparation of standard solutions.

8.2.2. Dissolve 117-mg portions of U_3O_8 of the various isotopic compositions in 10 mL of concentrated HNO_3 in a 50-mL beaker on a hot plate. Dilute to 100 mL in volumetric flasks with high-purity distilled water. Stock solutions are now 1,000 μg/g total uranium. Discard beakers in radioactive waste to avoid any possibility of isotopic cross-contamination.

8.2.3. Raw tissue and many foodstuffs contain as much as 90% water by weight. Analyze these materials against water standards.

8.2.4. Biological materials may be dried by oven, freeze-dryer, low-temperature ashing, or high-temperature dry ashing. Standardize materials prepared in any of these fashions by standard addition of small amounts of uranium solutions onto dry vegetation or by running known amounts of NIST SRM 1569 as the standard. If the method of standard additions is to be used, prepare additional dilutions of the concentrated stock just before actual standard preparation.

8.2.5. Dilute 100 μL of concentrated stock to 100 mL with distilled water. This solution is 1,000 μg/L. Pipet 50-, 100-, 250-, and 500-μL quantities onto 2 g of dry vegetation that has already been weighed into the 25-mL irradiation rabbits. Mix thoroughly. This provides standards at the 50-, 100-, 250-, and 500-ng/sample levels.

9. Procedure

9.1. Sample preparation.

9.1.1. Dry biological materials to constant weight in a standard laboratory drying oven at 60-70°C to minimize charring.

9.1.2. An alternative method is to freeze-dry the samples to constant weight.

9.2. Quality control sample preparation.

9.2.1. Use EPA-prepared water samples for wet biologicals.

9.2.2. Weigh 5.0 g of any of the following NIST SRMs into 25-mL irradiation rabbits for use with wet biological materials: 1566, 1570, 1571, 1573, 1575, 1577, 1577a. All materials have certified uranium concentrations in the 0.8 - 120 ng/g range.

9.2.3. Quality control samples should equal approximately 10% of the total number of samples analyzed.

9.3. Blank preparation.

9.3.1. Fill at least five 25-mL irradiation rabbits with uranium-free distilled water and screw lids on tight for use with wet biological materials.

9.3.2. Use empty irradiation rabbits for dry biological materials.

9.4. Sample submission and irradiation.

9.4.1. Stagger the blanks, QCs, and standards evenly throughout the sample set.

9.4.2. Transport the sample set to the Omega West Reactor (TA-2) and submit them directly to the DNA facility operator in Group INC-5. List any special instructions, program code, number of samples, etc. Provide a listing of actual sample weights, since the 25-mL rabbits are not sufficiently uniform in weight to make the assumption of constant tare valid when only a few grams of material are being analyzed.

9.4.3. Sample irradiation and counting are conducted by INC-5 in the "liquid" DNA facility as described in more detail in Source Material 12.5. All data reduction is done on-line by INC-5's PDP 11/60. Data are mailed to us.

9.4.4. Return the samples to our laboratory after they have been allowed to decay for two weeks. Discard the blanks in radioactive waste. Save the samples until the customer has accepted the data.

9.4.5. Standards and quality assurance samples may be reused. A two-week decay is recommended to minimize personnel radiation exposure, but there is no nuclear chemical barrier to immediate reuse if necessary.

10. Operation of Equipment

10.1. Equipment operation is the responsibility of INC-5.

11. Calculations

11.1. The general form of the data received from INC-5 is shown below. The stated result must be recalculated due to highly variable system blanks and the absence of daily standardization or quality control. Accurate daily determination of the system blank is required since this becomes an especially important source of error as the detection limit is approached. Many biological samples have uranium concentrations near the system detection limit.

OUTPUT FROM INC-5

Sample	Weight	Peak	Valley	Flux	ng/g
632a	2.00	882.	11.	5174	299.8
632b	2.00	966.	23.	5311	322.2
632c	2.00	1094.	20.	5264	371.6
97111a	7.01	255.	6.	5252	19.2
97112a	10.20	5449.	1127.	5238	384.6

11.2. The peak/valley ratio from the INC-5 data must be calculated for each sample. Ratios that fall below 5.0 indicate excessive gamma-pulse pile-up. Such samples will have to be either diluted and rerun or measured by another analytical technique. Data with ratios between 5.0 and 10.0 will have a cautionary note placed in the comment field of the database indicating that the results may be suspect. Data with ratios greater than 10.0 should be accurate.

11.3. Calculate the system calibration factor from the following equation:

$$K = \frac{A \times W \times F}{(P - B)} ,$$

where K = calibration factor (an average K will usually be calculated using multiple standards),
A = concentration of U standard (μg/g),
W = weight of standard (g),
F = reactor flux during irradiation of the standard,
P = gross counts in neutron peak of the standard, and
B = average gross counts in neutron peak of blanks.

11.4. Final U results are calculated by INC-5 using the following formula:

$$U = \frac{(P - B) \times K}{W \times F} ,$$

where U = concentration of uranium in the sample (μg/g),
P = gross counts in neutron peak of sample,
B = average gross counts in neutron peak of blanks,
W = sample weight (g),
F = reactor flux during irradiation of the sample, and
K = system calibration factor from Step 11.3.

11.5. Overall uncertainty is reported as the propagated sum of uncertainties from individual parts of the calculation process.

11.5.1. Calculate the counting uncertainty as follows:

$$D = \sqrt{P + B} ,$$

where D = counting uncertainty in total counts,
P = gross counts in the neutron peak of sample, and
B = average gross counts in the neutron peak of blanks.

11.5.2. Calculate the uncertainty in the calibration factor as follows:

E = standard deviation among all K factors for the same run,

where E = calibration uncertainty and
K = calibration factors from Step 11.3.

11.5.3. Calculate the uncertainty in sample weight as follows:

$$G = \frac{X}{W} ,$$

where G = uncertainty in sample weight,
X = minimum weight that the analytical balance can sense (g), and
W = sample weight (g).

11.5.4. Calculate the uncertainty in the reactor flux as follows:

$$H = \frac{1}{\sqrt{F}} ,$$

where H = uncertainty in reactor flux, and
F = reactor flux.

11.5.5. The final propagated uncertainty is calculated as follows:

$$V = U \times \sqrt{D^2 + E^2 + G^2 + H^2} ,$$

where V = overall uncertainty (μg/g),
U = result from Step 11.4 (μg/g),
D = counting uncertainty,
E = calibration factor uncertainty,
G = sample weight uncertainty, and
H = reactor flux uncertainty.

11.6. All sample calculations assume natural uranium isotopic abundance unless otherwise specified by the customer. In the latter case, the $^{235}U/^{238}U$ ratio must be determined by another analytical method and the data adjusted as follows:

$$T = \frac{I}{R} \times U ,$$

where T = adjusted total uranium concentration in the sample (μg/g),
I = $^{235}U/^{238}U$ ratio in natural materials (0.0072),
R = $^{235}U/^{238}U$ ratio measured in the sample, and
U = uranium concentration in the sample from Step 11.4 (μg/g).

12. Source Materials

12.1. S. Amiel, "Analytical Applications of Delayed Neutron Emission in Fissionable Elements," *Anal. Chem.* **34**, 1683-1692 (1962).

12.2. S. Amiel, J. Gilet, and D. Heymann, "Uranium Content of Chondrites by Thermal Neutron Activation and Delayed Neutron Counting," *Geochim. Cosmochim. Acta* **31**, 1499-1503 (1967).

12.3. G. R. Keepin, T. F. Wimett, and R. K. Zeigler, "Delayed Neutrons from Fissionable Isotopes of Uranium, Plutonium, and Thorium," *Phys. Rev.* **107**, 1044-1049 (1957).

12.4. S. J. Balestrini, J. P. Balagna, and H. O. Menlove, "Two Specialized Delayed Neutron Detector Designs for Assays of Fissionable Elements in Water and Sediment Samples," *Nucl. Instru. Methods* **136**, 521-524 (1976).

12.5. E. S. Gladney, D. B. Curtis, D. R. Perrin, J. W. Owens, and W. E. Goode, "Nuclear Techniques for the Chemical Analysis of Environmental Materials," Los Alamos Scientific Laboratory report LA-8192-MS (1980).

12.6. M. A. Gautier, E. S. Gladney, and B. T. O'Malley, "Quality Assurance for Health and Environmental Chemistry: 1985," Los Alamos National Laboratory report LA-10813-MS (1986).

12.7. E. S. Gladney, D. R. Perrin, and W. K. Hensley, "Determiation of Uranium in NBS Biological Standard Reference Materials by Delayed Neutron Assay," *J. Radioanal. Chem.* **59**, 249-251 (1980).

URANIUM IN GEOLOGICALS — DNA

Analyte: Uranium	**Method No.:** ER260
Matrices: Soils, rocks, sediments, and ores	**Minimum Detectable Concentration:** 0.1 ppm
Procedure: Instrumental delayed neutron activation (DNA) analysis	**Accuracy and Precision:** 100% ± 6%
Effective Date: 01/01/84	**Authors:** Ernest S. Gladney Daniel R. Perrin George H. Brooks

SAFETY NOTE: Before beginning this procedure, read all of the Material Safety Data Sheets for the chemicals listed in Sec. 7. Read Sec. 4.3 of the EM-9 Safety Manual for information on personal protective clothing and equipment.

1. Principle of Method

1.1. Silicate materials from almost any source contain at least a small amount of uranium. Certain uranium fission products (primarily from ^{235}U) emit neutrons as their primary decay mode, with a "group" half-life of about 54 s. The neutrons from the samples are counted in ^{3}He detectors following a short thermal neutron irradiation.

1.2. Quantitative data on uranium concentrations are obtained by concurrent measurements of rocks or ores of known uranium content and isotopic ratio. Some assumptions concerning the uranium isotopic ratio of the samples must be made.

1.3. It is important to employ standards of the same matrix as the samples. Differences in neutron thermalization have been observed among silicates, waters, air filters, and biologicals, necessitating the use of matrix-based standards.

2. Sensitivity

2.1. Four hundred nanograms of uranium can normally be detected in the delayed neutron activation (DNA) system for silicate samples. The silicate system has much greater internal shielding than the liquid system to minimize gamma-ray pulse pile-up from ^{28}Al, a major short-lived activation product in rocks. This is the primary reason for the much higher detection limits observed with this system. The system blank is ordinarily not an important factor.

2.2. Saturation effects in the detector are an important consideration for samples with more than 1,000 μg total uranium of natural isotopic abundance (Fig 1). Higher concentrations of uranium may be handled by lowering the reactor power level.

3. Accuracy and Precision

3.1. The method is independent of sample size or shape (geometry) for 4-mL irradiation rabbits.

3.2. There are numerous National Institute of Standards and Technology (NIST), United States Geological Survey (USGS), and Canadian Certified Reference Materials Project (CCRMP) rock and ore reference materials with certified or well-established consensus values for uranium. Our results for these are consistently within ± 1 standard deviation of the certified mean concentrations, which range from 0.5 - 10,000 μg/g natural uranium (see Table I). Over a period of 5 years the determination of uranium in these reference materials had a mean recovery of 100% ± 6% on 800 measurements.

4. Interferences

4.1. Very high concentrations of fissionable Pu will create positive interference, but this has never been observed in routine samples.

4.2. High concentrations of Th relative to U can create positive interferences since thorium fission is induced by fast neutrons. The degree of flux thermalization is very important in minimizing this source of interference. Thorium/uranium ratios of 50:1 are needed before the impact can be observed in our silicate DNA system. This has been observed on the USGS GSP-1 reference material.

4.3. Departure of the U isotopic ratio from that assumed can create either positive or negative interferences. Uranium-238 fissions by fast neutron capture while ^{233}U fissions by thermal neutron capture, which has a different yield of delayed-neutron-emitting products. Some assumptions concerning the isotopic abundance in the samples must be made in order to calculate total uranium concentration. Uranium-235 may be reported directly with no such assumptions required.

5. Collection and Storage of Samples

5.1. There are no special collection requirements.

5.2. Store samples in containers that avoid contamination after collection.

6. Apparatus

6.1. Irradiation rabbits: 4-mL, screw-cap, polyethylene, manufactured in Los Alamos.

6.2. Nuclear reactor: equipped with a "silicate" delayed neutron facility. The characteristics of the Los Alamos facility are described in detail in Source Material 12.5.

6.3. Analytical balance: top loading.

7. Reagents

7.1. None required.

8. Calibration and Standards

8.1. Calibrate the DNA facility by concurrent analysis of National Bureau of Standards (NBS) Standard Reference Material (SRM) 1633a (Trace Elements in Coal Fly Ash) with a certified uranium content of 10.2 ± 0.1 ppm.

9. Procedure

9.1. Sample preparation.

9.1.1. Sample preparation is usually done by the customer and normally consists of drying and grinding the silicate material.

9.2. Quality control sample preparation.

9.2.1. Place 1-2 g of any of a number of certified reference materials into 4-mL irradiation rabbits. The water content of most materials is so low that they can be used without additional drying.

9.2.2. Quality control samples should equal approximately 10% of the total number of samples analyzed.

9.3. The activity of the system blank is far below the detection limits. No daily blanks are required.

9.4. Sample submission and irradiation.

9.4.1. Stagger the QCs and standards evenly throughout the sample set.

9.4.2. Transport the sample set to the Omega West Reactor (TA-2) and submit them directly to the DNA facility operator in Group INC-5. List any special instructions, program code, number of samples, etc. Samples

will be weighed by INC-5. For samples with weights less than 50 mg, preweighing is advised since the INC-5 balance gives only 2-decimal-place accuracy.

9.4.3. Sample irradiation and counting are conducted by INC-5 in the silicate DNA facility as described in more detail in Source Material 12.5. All data reduction is done on-line by INC-5's PDP 11/60 and is mailed to us.

9.4.4. Return the samples to our laboratory after they have been allowed to decay for two weeks. Save the samples until the customer has accepted the data.

9.4.5. Standards and quality control samples may be reused. A two-week decay is recommended to minimize personnel radiation exposure, but there is no nuclear chemical barrier to immediate reuse if necessary.

9.5. Samples with high concentrations of uranium may be analyzed with this system if advance arrangement is made with the reactor operations staff to run the reactor at lower power. The normal reactor power level is 8000 kW, but this can be reduced by up to a factor of 100, which extends the upper detector saturation limit by a factor of 100 to over 100,000 μg of total uranium of natural isotopic abundance (see Fig. 1).

10. Operation of Equipment

10.1. Equipment operation is the responsibility of INC-5.

11. Calculations

11.1. The general form of the data received from INC-5 is shown below. Check the results for the NIST 1633a standards. If they are within 10.0 - 10.4 ppm, the stated results for the run may be accepted without recalculation. If the results for NIST 1633a are outside this range, calculate a correction factor and multiply all stated results by the calculated factor: correction factor = $10.2/\overline{X}$, where $\overline{X}$ = concentration of U measured in 1633a.

OUTPUT FROM INC-5					
Run	Sample	Weight	Counts	Flux	ppb
1	1633a	1.88	8206.	1803.	10.32
2	1633b	2.16	9566.	1801.	10.49
3	1633c	2.32	10125.	1801.	10.34
4	11976	3.31	4850.	1806.	3.45
5	11977	3.36	4850.	1806.	3.40
6	11978	3.08	4126.	1805.	3.15

11.2. The peak/valley ratio from the INC-5 data must be calculated for each sample. Ratios that fall below 5.0 indicate excessive gamma-pulse pile-up. Such samples will have to be either diluted and rerun or measured by another analytical technique. Data with ratios between 5.0 and 10.0 will have a cautionary note placed in the comment field of the database indicating that the results may be suspect. Data with ratios greater than 10.0 should be accurate.

11.3. Calculate the system calibration factor from the following equation:

$$K = \frac{A \times W \times F}{(P - B)} ,$$

where K = calibration factor (an average K will usually be calculated using multiple standards),
A = concentration of U standard (μg/g),
W = weight of standard (g),
F = reactor flux during irradiation of the standard,
P = gross counts in neutron peak of the standard, and
B = average gross counts in neutron peak of blanks.

11.4. Final U results are calculated by INC-5 using the following formula:

$$U = \frac{(P - B) \times K}{W \times F} ,$$

where U = concentration of uranium in the sample (μg/g),
P = gross counts in neutron peak of sample,
B = average gross counts in neutron peak of blanks,

W = sample weight (g),
F = reactor flux during irradiation of the sample, and
K = system calibration factor from Step 11.3.

11.5. Overall uncertainty is reported as the propagated sum of uncertainties from individual parts of the calculation process.

11.5.1. Calculate the counting uncertainty as follows:

$$D = \sqrt{P + B} \quad ,$$

where D = counting uncertainty in total counts,
P = gross counts in the neutron peak of sample, and
B = average gross counts in the neutron peak of blanks.

11.5.2. Calculate the uncertainty in the calibration factor as follows:

E = standard deviation among all K factors for the same run,

where E = calibration uncertainty and
K = calibration factors from Step 11.3.

11.5.3. Calculate the uncertainty in sample weight as follows:

$$G = \frac{X}{W} \quad ,$$

where G = uncertainty in sample weight,
X = minimum weight that the analytical balance can sense (g), and
W = sample weight (g).

11.5.4. Calculate the uncertainty in the reactor flux as follows:

$$H = \frac{1}{\sqrt{F}} \quad ,$$

where H = uncertainty in reactor flux and
F = reactor flux.

11.5.5. The final propagated uncertainty is calculated as follows:

$$V = U \times \sqrt{D^2 + E^2 + G^2 + H^2} \quad ,$$

where V = overall uncertainty (μg/g),
U = result from Step 11.4 (μg/g),
D = counting uncertainty,
E = calibration factor uncertainty,
G = sample weight uncertainty, and
H = reactor flux uncertainty.

11.6. All sample calculations assume natural uranium isotopic abundance unless otherwise specified by the customer. In the latter case, the $^{235}U/^{238}U$ ratio must be determined by another analytical method and the data adjusted as follows:

$$T = \frac{I}{R} \times U \quad ,$$

where T = adjusted total uranium concentration in the sample (μg/g),
I = $^{235}U/^{238}U$ ratio in natural materials (0.0072),
R = $^{235}U/^{238}U$ ratio measured in the sample, and
U = uranium concentration in the sample from Step 11.4 (μg/g).

12. Source Materials

12.1. S. Amiel, "Analytical Applications of Delayed Neutron Emission in Fissionable Elements," *Anal. Chem.* **34**, 1683-1692 (1962).

12.2. S. Amiel, J. Gilet, and D. Heymann, "Uranium Content of Chondrites by Thermal Neutron Activation and Delayed Neutron Counting," *Geochim. Cosmochim. Acta* **31**, 1499-1503 (1967).

12.3. G. R. Keepin, T. F. Wimett, and R. K. Zeigler, "Delayed Neutrons from Fissionable Isotopes of Uranium, Plutonium, and Thorium," *Phys. Rev.* **107**, 1044-1049 (1957).

12.4. S. J. Balestrini, J. P. Balagna, and H. O. Menlove, "Two Specialized Delayed Neutron Detector Designs for Assays of Fissionable Elements in Water and Sediment Samples," *Nucl. Instru. Methods* **136**, 521-524 (1976).

12.5. E. S. Gladney, D. B. Curtis, D. R. Perrin, J. W. Owens, and W. E. Goode, "Nuclear Techniques for the Chemical Analysis of Environmental Materials," Los Alamos Scientific Laboratory report LA-8192-MS (1980).

12.6. E. S. Gladney, D. R. Perrin, W. K. Hensley, and M. E. Bunker, "Uranium Content of Twenty-five Silicate Reference Materials," *Geostandards Newsletter* **4**, 243-246 (1980).

12.7. H. F. Steger, "Certified Reference Materials," Canadian Certified Reference Materials Project, Mineral Sciences Laboratory, Energy, Mines, and Resources, Canada report CM84-14E (1984).

12.8. M. A. Gautier, E. S. Gladney, and D. R. Perrin, "Quality Assurance for Health and Environmental Chemistry: 1984," Los Alamos National Laboratory report LA-10508-MS (1985).

12.9. M. A. Gautier, E. S. Gladney, and B. T. O'Malley, "Quality Assurance for Health and Environmental Chemistry: 1985," Los Alamos National Laboratory report LA-10813-MS (1986).

12.10. E. S. Gladney, B. T. O'Malley, I. Roelandts, and T. E. Gills, "Standard Reference Materials: Compilation of Elemental Concentration Data for NBS Clinical, Biological, Geological, and Environmental Standard Reference Materials," NBS Special Publication 260-111 (1987).

12.11. E. S. Gladney and I. Roelandts, "1987 Compilation of Elemental Concentration Data for USGS BIR-1, DNC-1, and W-2," *Geostandards Newsletter* **12**, 63-118, (1988).

12.12. E. S. Gladney and I. Roelandts, "1987 Compilation of Elemental Concentration Data for USGS BHVO-1, MAG-1, QLO-1, RGM-1, SCo-1, SDC-1, SGR-1, and STM-1," *Geostandards Newsletter* **12**, 253-362 (1988).

12.13. M. A. Gautier, E. S. Gladney, W. Moss, M. Phillips, and B. T. O'Malley, "Quality Assurance for Health and Environmental Chemistry: 1986," Los Alamos National Laboratory report LA-11114-MS (1987).

12.14. M. A. Gautier, E. S. Gladney, M. Phillips, and B. T. O'Malley, "Quality Assurance for Health and Environmental Chemistry: 1988," Los Alamos National Laboratory report LA-11637-MS (1989).

12.15. E. S. Gladney and I. Roelandts, "1988 Compilation of Elemental Concentration Data for CCRMP Soils SO-1 to SO-4," *Geostandards Newsletter* **13**, 217-268 (1989).

12.16. E. S. Gladney and I. Roelandts, "1988 Compilation of Elemental Concentration Data for USGS Geochemical Exploration Reference Materials GXR-1 to GXR-6," *Geostandards Newsletter* (in press).

12.17. E. S. Gladney and I. Roelandts, "1988 Compilation of Elemental Concentration Data for CCRMP Reference Rock Samples SY-2, SY-3, and MRG-1," *Geostandards Newsletter* (in press).

12.18. "American National Standard for Performance Criteria for Radiobioassay," draft, American National Standards Institute, ANSI N13.30 (1989).

12.19. L. A. Currie, "Limits for Qualitative Detection and Quantitative Determination," *Analytical Chemistry* **40**, 586-593 (1968).

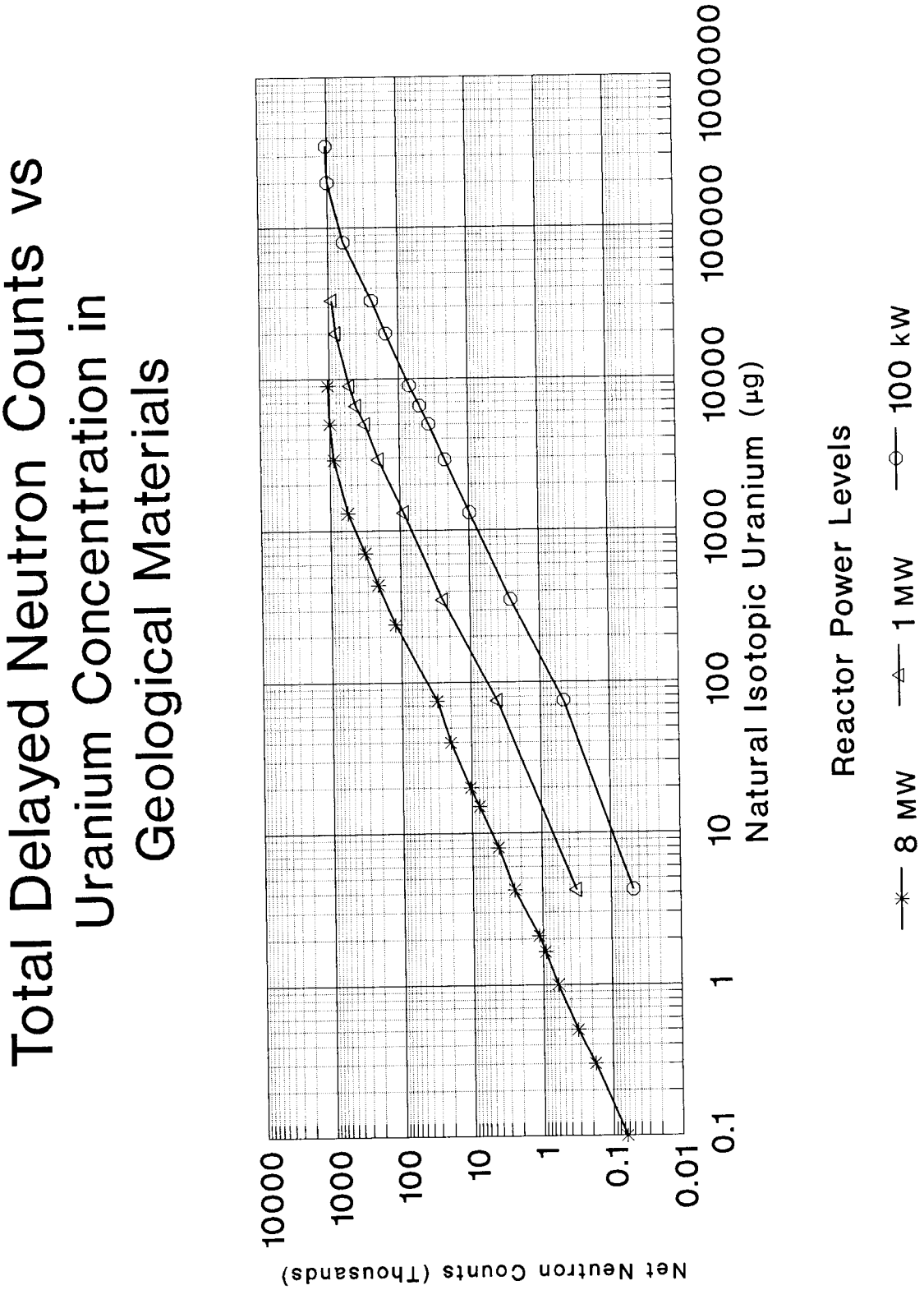

Fig. 1. Total delayed neutron counts vs uranium content of geological samples.

TABLE I. DNA MEASUREMENTS OF URANIUM IN GEOLOGICAL REFERENCE MATERIALS

Agency	Material	EM-9 (mg/g)			Certified or Consensus Value (mg/g)		
NBS	120B	125.7	±	0.6	128.4	±	0.5
	278	4.53	±	0.13	4.58	±	0.4
	688	0.32	±	0.02	0.31	±	0.02
	1633a	10.47	±	0.09	10.2	±	0.1
	1645	1.11	±	0.05	1.11	±	0.05
	1646	3.10	±	0.12	2.99	±	0.06
	4350b	2.43	±	0.05	2.4		
	4353	3.04	±	0.07	3.0		
	4355	2.75	±	0.09	3.0	±	0.5
CCRMP	DL-1	38.6	±	0.8	41	±	2
	BL-1	219	±	10	220	±	10
	BL-4	1750	±	25	1730	±	40
	BL-4A	1290	±	12	1248	±	7
	DH-1A	2610	±	46	2629	±	3
	DL-1A	112			116	±	3
	UTS-1	45	±	2	49	±	3
	UTS-2	49.2	±	0.6	56	±	2
	UTS-3	539	±	14	513	±	9
	UTS-4	1010	±	10	1010	±	19
	SY-2	284	±	8	284	±	9
	SY-3	705	±	72	650	±	55
	MRG-1	0.27	±	0.01	0.24	±	0.04
	SO-1	1.74	±	0.05	1.71	±	0.04

TABLE I. DNA MEASUREMENTS OF URANIUM IN GEOLOGICAL REFERENCE MATERIALS (cont)

Agency	Material	EM-9 (mg/g)			Certified or Consensus Value (mg/g)		
	SO-2	0.96	±	0.05	0.98	±	0.05
	SO-3	1.11	±	0.06	1.11	±	0.02
USGS	BHVO-1	0.44	±	0.07	0.42	±	0.06
	MAG-1	2.87	±	0.23	2.7	±	0.3
	QLO-1	1.93	±	0.12	1.94	±	0.12
	RGM-1	5.93	±	0.20	5.8	±	0.5
	SCo-1	3.20	±	0.15	3.0	±	0.2
	SDC-1	3.06	±	0.14	3.14	±	0.20
	SGR-1	5.52	±	0.29	5.4	±	0.4
	STM-1	8.99	±	0.16	9.06	±	0.13
	BIR-1	0.02	±	0.02	0.025		
	DNC-1	0.10	±	0.02	0.10		
	W-2	0.61	±	0.04	0.53	±	0.08
USGS	GXR-1	37.1	±	1.3	34.9	±	1.2
	GXR-2	3.34	±	0.08	2.90	±	0.06
	GXR-3	3.46	±	0.23	3.0	±	0.3
	GXR-4	6.94	±	0.30	6.20	±	0.13

URANIUM IN WATER — DNA

Analyte: Uranium	**Method No.:** ER270
Matrix: Natural and effluent waters	**Minimum Detectable Concentration:** 0.4 μg/L
Procedure: Instrumental delayed neutron activation (DNA) analysis	**Accuracy and Precision:** 100% ± 6%
Effective Date: 06/06/84	**Authors:** Ernest S. Gladney Daniel R. Perrin George H. Brooks

SAFETY NOTE: Before beginning this procedure, read all of the Material Safety Data Sheets for the chemicals listed in Sec. 7. Read Sec. 4.3 of the EM-9 Safety Manual for information on personal protective clothing and equipment.

1. Principle of Method

1.1. Aqueous samples of almost any type can be analyzed for uranium. Certain uranium fission products (primarily from ^{235}U) emit neutrons as their primary decay mode, with a "group" half-life of about 54 s. The neutrons from the samples are counted in ^{3}He detectors following a short thermal neutron irradiation.

1.2. Quantitative data on uranium concentrations are obtained by concurrent measurements of aqueous standards of known uranium content and isotopic ratio. Some assumptions concerning the uranium isotopic ratio of the samples must be made.

1.3. It is important to employ standards in the same matrix as the samples. Differences in neutron thermalization have been observed among waters, air filters, and biologicals, necessitating the use of matrix-based standards.

2. Sensitivity

2.1. Ten nanograms can normally be detected in 25-mL samples in the delayed neutron activation (DNA) system for liquid samples. The detection limit is strongly influenced by the precision of the system blank and can deteriorate to 40 ng. Saturation effects in the detector are insignificant up to the 10-mg/L (ppm) uranium level (Fig. 1).

3. Accuracy and Precision

3.1. The method is independent of sample size or shape (geometry) for 25-mL rabbits.

3.2. There are no National Institute of Standards and Technology (NIST) Standard Reference Materials (SRMs) for uranium in water. Both the Environmental Protection Agency (EPA) and the Department of Energy (DOE) Environmental Measurements Laboratory (EML) circulate uranium-in-water quality assurance intercomparison samples. Our results for these are consistently within ±1 standard deviation of the certified mean concentration, which ranges from 5 - 2000 ng/mL. Over a period of 5 y the determination of uranium in these reference materials had a mean recovery of 100% ± 6% on 340 measurements. Results on EPA Performance Evaluation samples are shown in the following table.

EPA Uranium in Water		
Date	EM-9 (pCi/L)	EPA (pCi/L)
September 1983	27.7 ± 1.4	26 ± 6
November 1983	18.2 ± 1.1	17 ± 4
February 1984	13.4 ± 1.2	15 ± 6
August 1984	23.6 ± 0.6	20 ± 6
September 1984	29.2 ± 1.0	31 ± 6
February 1985	11.9 ± 0.8	12 ± 6
August 1985	3.7 ± 0.5	4 ± 6
February 1986	9.1 ± 1.1	9 ± 6
August 1986	4.1 ± 0.6	4 ± 6
February 1987	8.2 ± 1.0	8 ± 6
August 1987	12.7 ± 0.7	13 ± 6
February 1988	3.3 ± 0.5	3 ± 6
August 1988	5.6 ± 0.4	6 ± 6

4. Interferences

4.1. Very high concentrations of fissionable Pu will create positive interference, but this has never been observed in routine water samples.

4.2. High concentrations of Th relative to U can create positive interferences since thorium fission is induced by fast neutrons. The degree of flux thermalization is very important in minimizing this source of interference. Thorium/uranium ratios of 100:1 are needed before the impact can be observed in our DNA system. Since thorium is much less soluble in water than uranium, this is an unlikely interference.

4.3. Departure of the U isotopic ratio from that assumed can create either positive or negative interferences. Uranium-238 fissions by fast neutron capture while ^{233}U fissions by thermal neutron capture, which has a different yield of delayed-neutron-emitting products. Some assumptions concerning the isotopic abundance in the samples must be made in order to calculate total uranium concentration. Uranium-235 may be reported directly with no such assumptions required.

4.4. Very large concentrations of high-cross-section isotopes with short-lived activation products can also interfere with uranium determination. High levels of Al, Na, or Cl produce intense gamma-ray fluxes in the detectors that can eventually overwhelm the neutron peak by gamma-pulse pile-up. The problem cannot be corrected for, but the spectrum can be monitored for its occurrence and data thus affected can be rejected. Samples can be diluted to eliminate this interference, but with corresponding loss of sensitivity.

5. Collection and Storage of Samples

5.1. Filter samples and acidify to 2% HNO_3 immediately after collection to preclude loss of U to container walls. If samples are collected directly in 25-mL irradiation rabbits, acidification is unnecessary. Avoid using HCl because Cl contributes to pulse pile-up.

5.2. Store samples in containers that avoid contamination of the water samples after collection.

6. Apparatus

6.1. Irradiation rabbits: 25-mL, screw-cap, polyethylene, scintillation vials, Packard.

6.2. Nuclear reactor: equipped with a "liquid" delayed neutron facility. The characteristics of the Los Alamos facility are described in detail in Source Material 12.5.

6.3. Standard water filtering apparatus for supporting 0.45-micron filters.

6.4. Hot plate.

6.5. Flasks: 100-mL, glass, volumetric, new.

6.6. Beakers: 50-mL, Pyrex, new.

6.7. Pipettes with disposable tips: 50- and 100-μL, 1- and 5-mL.

6.8. Heat-sealable pouches: Kaypak/Scotchpak.

6.9. Baking dishes: 9- by 14- by 2-in., Pyrex, lined with Teflon adhesive material.

7. Reagents

7.1. Nitric acid (concentrated, highest purity available).

7.2. Distilled water (highest purity available).

8. Calibration and Standards

8.1. Calibrate the DNA facility by concurrent analysis of known quantities of uranium added to distilled water.

8.2. Standard preparation.

8.2.1. NIST Uranium Isotopic Standards U-0002 thru U-970 and NBS SRM 950b (Uranium Oxide, U_3O_8) are used exclusively for the preparation of standard solutions.

8.2.2. Dissolve 117-mg portions of U_3O_8 of the various isotopic compositions in 10 mL of concentrated HNO_3 in 50-mL beakers on a hot plate. Dilute to 100 mL in volumetric flasks with high-purity distilled water. Stock solutions are now 1,000 ppm total uranium. Discard beakers in radioactive waste to avoid any possibility of isotopic cross-contamination.

8.2.3. Prepare additional dilutions of the concentrated stock just before actual water standard preparation.

8.2.3.1. Dilute 50 μL of concentrated stock to 100 mL with distilled water. Place into irradiation rabbits immediately. These standards are 500 μg/L (ppb).

8.2.3.2. Dilute 100 μL of concentrated stock to 100 mL with distilled water. This solution is 1,000 μg/L (ppb). Make two further dilutions of this dilute stock as described below.

8.2.3.3. Dilute 1 mL of dilute stock from Step 8.2.3.2 to 100 mL with distilled water. Immediately place into irradiation rabbits. These standards are 10 μg/L (ppb).

8.2.3.4. Dilute 10 mL of dilute stock from Step 8.2.3.2 to 100 mL with distilled water. Immediately place into irradiation rabbits. These standards are 100 μg/L (ppb).

9. Procedure

9.1. Sample preparation for the wet procedure.

9.1.1. Fill 25-mL irradiation rabbits with samples and screw the lids on tight.

9.1.2. Advantages of wet procedure.

9.1.2.1. Ease of sample preparation.

9.1.2.2. Minimization of sample contamination during handling.

9.1.3. Disadvantages of wet procedure.

9.1.3.1. Constantly leaking samples that often cause serious negative errors in the uranium concentration of samples.

9.1.3.2. The leaking samples cause a contaminated "liquid" system which must be cleaned after every sample run during which a leak occurs. This results in significant system down time and slow sample turnaround.

9.2. Sample preparation for the dry (evaporative) procedure.

9.2.1. Fill 25-mL irradiation rabbits with the samples and record the net wet weight of the samples in the notebook.

9.2.2. Transfer the 25-mL samples into Kaypak/Scotchpak heat-sealable pouches and place them in a 9- by 14- by 2-in. Pyrex baking dish for evaporation. Mark the pouches with the sample number.

9.2.3. Turn on the hot plate to approximately 60°C, and let the samples evaporate for 1-2 d or until dry.

9.2.4. Once all the liquid has evaporated, fold the pouches to a form that will fit into the irradiation rabbits (rolled usually works best) and secure the lid back on the vial.

9.2.5 The advantage of this preparation method is that it eliminates the problems enumerated under wet preparation. Disadvantages are that this method requires more analyst time and increases the risk of sample contamination during the evaporation.

9.3. Quality contol sample preparation.

9.3.1. The EPA Uranium-in-Water Performance Evaluation samples received 3-4 times per year are used to provide batch-to-batch quality assurance. Diltue the entire EPA stock received to 4 L using the EPA instructions. Immediately place all of this solution into 25-mL irradiation rabbits and store until needed.

9.3.2. Quality control samples should equal approximately 10% of the total samples analyzed.

9.4. Blank preparation.

9.4.1. Fill at least five 25-mL irradiation rabbits with uranium-free distilled water and screw lids on tight.

9.5. Sample submission and irradiation.

9.5.1. Stagger the blanks, QCs, and standards evenly throughout the sample set.

9.5.2. Transport the sample set to the Omega West Reactor (TA-2) and submit them directly to the DNA facility operator in Group INC-5. List any special instructions, program code, number of samples, etc. Samples will be individually weighed by INC-5 before irradiation, so volumetric manipulations of samples are not required. The 25-mL rabbits are sufficiently similar in weight that individual pretaring is not necessary for water samples.

9.5.3. Sample irradiation and counting are conducted by INC-5 in the "liquid" DNA facility as described in more detail in Source Material 12.5. All data reduction is done on-line by INC-5's PDP 11/60. Data are mailed to us.

9.5.4. Return the samples to our laboratory after they have been allowed to decay for two weeks. Discard the blanks in radioactive waste. Save the samples until the customer has accepted the data.

9.5.5. Standards and quality control samples may be reused. A two-week decay period is recommended to minimize personnel radiation exposure, but there is no nuclear chemical barrier to immediate reuse if necessary.

10. Operation of Equipment

10.1. Equipment operation is the responsibility of INC-5.

11. Calculations

11.1. The general form of the data received from INC-5 is shown below. If the actual weight of water in the sample is used, the final result is in $\mu g/L$ (ppb). The result provided by INC-5 must be recalculated due to highly variable system blanks and the absence of either daily standardization or quality control. Accurate daily determination of the system blank is required because this becomes an especially important source of error as the detection limit is approached. Most natural water samples have uranium concentrations near the system detection limit.

OUTPUT FROM INC-5

Sample	Weight	Peak	Valley	Flux	ppb
861069	25.0	947.	24.	5308	25.10
861070	24.8	1336.	29.	5415	35.87
861071	23.9	403.	120.	5408	9.69

11.2. The peak/valley ratio from the INC-5 data must be calculated for each sample. Ratios that fall below 5.0 indicate excessive gamma-pulse pile-up. Such samples will have to be either diluted and rerun or analyzed by another analytical technique. Data with ratios between 5.0 and 10.0 will have a cautionary note placed in the comment field of the database indicating that the results may be suspect. Data with ratios greater than 10.0 should be accurate.

11.3. Calculate the system calibration factor from the following equation:

$$K = \frac{A \times W \times F}{(P - B)} ,$$

where K = calibration factor (an average K will usually be calculated using multiple standards),
A = concentration of U standard ($\mu g/L$),
W = volume of standard (L),
F = reactor flux during irradiation of the standard,
P = gross counts in neutron peak of the standard, and
B = average gross counts in neutron peak of blanks.

11.4. Final U results are calculated by INC-5 using the following formula:

$$U = \frac{(P - B) \times K}{W \times F} ,$$

where U = concentration of uranium in the sample (μg/L),
P = gross counts in neutron peak of sample,
B = average gross counts in neutron peak of blanks,
W = sample volume (L),
F = reactor flux during irradiation of the sample, and
K = system calibration factor from Step 11.3.

11.5. Overall uncertainty is reported as the propagated sum of uncertainties from individual parts of the calculation process.

11.5.1. Calculate the counting uncertainty as follows:

$$D = \frac{\sqrt{P + B}}{P} ,$$

where D = counting uncertainty in total counts,
P = gross counts in the neutron peak of sample, and
B = average gross counts in the neutron peak of blanks.

11.5.2. Calculate the uncertainty in the calibration factor as follows:

E = standard deviation among all K factors for the same run,

where E = calibration uncertainty and
K = calibration factors from Step 11.3.

11.5.3. Calculate the uncertainty in sample volume as follows:

$$G = \frac{X}{W} ,$$

where G = uncertainty in sample volume,
X = minimum volume that the pipette can measure (mL), and
W = sample volume (mL).

11.5.4. Calculate the uncertainty in the reactor flux as follows:

$$H = \frac{\sqrt{F}}{F} ,$$

where H = uncertainty in reactor flux, and
F = reactor flux.

11.5.5. The final propagated uncertainty is calculated as follows:

$$V = U \times \sqrt{D^2 + E^2 + G^2 + H^2} ,$$

where V = overall uncertainty (μg/L),
U = result from Step 11.4 (μg/L),
D = counting uncertainty,
E = calibration factor uncertainty,
G = sample volume uncertainty, and
H = reactor flux uncertainty.

11.6. All sample calculations assume natural uranium isotopic abundance unless otherwise specified by the customer. In the latter case, the $^{235}U/^{238}U$ ratio must be determined by another analytical method and the data adjusted as follows:

$$T = \frac{I}{R} \times U ,$$

where T = adjusted total uranium concentration in the sample (μg/g),
I = $^{235}U/^{238}U$ ratio in natural materials (0.0072),
R = $^{235}U/^{238}U$ ratio measured in the sample, and
U = uranium concentration in the sample from Step 11.4 (μg/L).

12. Source Materials

12.1. S. Amiel, "Analytical Applications of Delayed Neutron Emission in Fissionable Elements," *Anal. Chem.* **34**, 1683-1692 (1962).

12.2. S. Amiel, J. Gilet, D. Heymann, "Uranium Content of Chondrites by Thermal Neutron Activation and Delayed Neutron Counting," *Geochim. Cosmochim. Acta* **31**, 1499-1503 (1967).

12.3. G. R. Keepin, T. F. Wimett, R. K. Zeigler, "Delayed Neutrons from Fissionable Isotopes of Uranium, Plutonium, and Thorium," *Phys. Rev.* **107**, 1044-1049 (1957).

12.4. S. J. Balestrini, J. P. Balagna, H. O. Menlove, "Two Specialized Delayed Neutron Detector Designs for Assays of Fissionable Elements in Water and Sediment Samples," *Nucl. Instru. Methods* **136**, 521-524 (1976).

12.5. E. S. Gladney, D. B. Curtis, D. R. Perrin, J. W. Owens, and W. E. Goode, "Nuclear Techniques for the Chemical Analysis of Environmental Materials," Los Alamos Scientific Laboratory report LA-8192-MS (1980).

12.6. M. A. Gautier, E. S. Gladney, and B. T. O'Malley, "Quality Assurance for Health and Environmental Chemistry: 1985," Los Alamos National Laboratory report LA-10813-MS (1986).

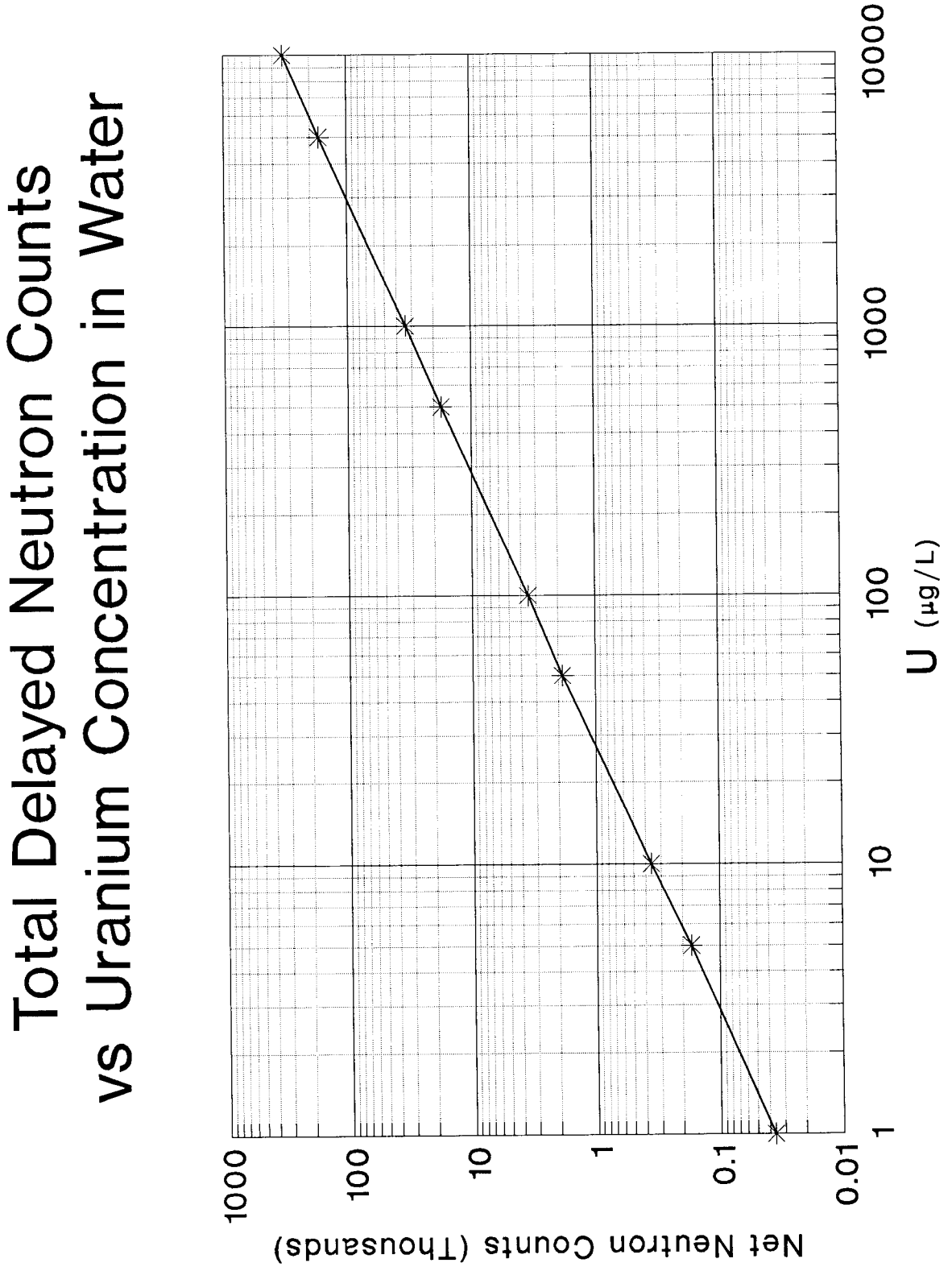

Fig. 1. Delayed neutron counts vs uranium concentration in water samples.

TOTAL URANIUM AND $^{235}U/^{238}U$ RATIO IN WATER — ICPMS

Analyte: Uranium	**Method No.:** ER290
Matrix: Natural and effluent waters	**Minimum Detectable Concentration:** 0.1 μg/L
Procedure: Inductively coupled plasma mass spectrometry (ICPMS)	**Accuracy and Precision:** 100% ± 5% at 10 μg/L
Effective Date: 10/01/86	**Authors:** Michael G. Bell Ernest S. Gladney

SAFETY NOTE: Before beginning this procedure, read all of the Material Safety Data Sheets for the chemicals listed in Sec. 7. Read Sec. 4.3 of the EM-9 Safety Manual for information on personal protective clothing and equipment.

1. Principle of Method

1.1. Aqueous samples of almost any type can be analyzed for uranium. Samples are aspirated into an inductively coupled argon plasma ionization source.

1.2. Ions from the plasma are drawn into a quadrupole mass spectrometer where they are filtered according to mass. The output of the quadrupole is detected by a continuous dynode electron multiplier operating in the ion counting mode. The output from the detector is amplified and stored on a conventional multichannel pulse-height analyzer.

1.3. The quadrupole mass filter may be scanned to examine the mass range of 208-241 amu to produce simultaneous results for uranium isotopes and internal standards.

1.4. Quantitative data on uranium concentrations and isotopic ratio are obtained by concurrent measurements of aqueous standards of known uranium content and isotopic ratio. A major advantage of this method is that no assumptions concerning the uranium isotopic ratio of the samples need to be made.

1.5. Simple chemical preconcentration is required for isotope ratio determination in samples that yield small ^{235}U peaks.

2. Sensitivity and Resolution

2.1. The sensitivity of this instrument is reported as (ion counts/s)/ppm of the mass of interest. This value varies daily, with typical results for masses above 80 amu of 0.5 - 1.0 million (counts/s)/ppm.

2.2. Sensitivity may sometimes be improved by changing any one or more of the following operating parameters: counting time, ion focusing lens potentials, nebulizer gas flow rate, sample flow rate, or the regularity and smoothness of the sampler and skimmer cone orifices.

2.3. The resolution of the inductively coupled plasma mass spectrometer (ICPMS) is based on the width of the peak at 5% of the peak height. A resolution of 1 amu between ^{207}Pb and ^{208}Pb at 5% of the peak height is usually obtained. Resolution may be increased when necessary, but with a corresponding loss in sensitivity.

2.4. The sensitivity of the isotope ratio measurement is determined by both abundance and statisitical considerations. Since many of the samples encountered originate from AEC/ERDA/DOE waste burial areas, altered isotopes are to be expected. Samples with ^{235}U enrichment high enough to require chemical preconcentration for observation of small ^{238}U mass peaks have not yet been encountered. Samples enriched in ^{238}U ("depleted uranium") are often observed, and preconcentration methods are directed towards this aspect of isotope ratio measurement.

3. Accuracy and Precision

3.1. Correct for instrumental drift by using ^{209}Bi or ^{232}Th as an internal standard. Spike concentrations of 100 $\mu g/L$ are spiked into the samples before analysis.

3.2. The ICPMS is an ion counting system and is subject to normal "counting statistics" definitions of precision. Therefore, the square root of the number of counts is the minimum error. Account for other sources of uncertainty and mathematically propagate them to this minimum value.

3.3. There are no National Institute of Standards and Technology (NIST) Standard Reference Materials (SRMs) for urnanium in water. Both the Environmental Protection Agency (EPA) and the DOE Environmental Measurements Laboratory circulate uranium-in-water quality assurance samples. Our results for these are consistently within 1 standard deviation of the certified mean concentration. Results are shown below.

EPA Uranium in Water QA Materials (pCi/L)		
SAMPLE	EM-9 ICPMS (pCi/L)	EPA Value (pCi/L)
U in Water, Sept 1984	30.6 ± 2.1	31 ± 6
Alpha PE, April 1986	8.1 ± 0.2	5 ± 6
U in Water, August 1986	4.2 ± 0.4	4 ± 6
Alpha PE, October 1986	9.8 ± 0.4	10 ± 6
U in Water, February 1987	4.4 ± 0.1	8 ± 6
Alpha PE, April 1987	5.0 ± 0.1	5 ± 6
U in Water, August 1987	13 ± 2	13 ± 6
U in Water, February 1988	3.0 ± 0.1	3 ± 6
Alpha PE, April 1988	7.5 ± 0.2	6 ± 6
U in Water August 1988	6.4 ± 0.4	6 ± 6
Alpha PE, October 1988	9.6 ± 0.1	5 ± 6

3.4. ICPMS is not currently capable of delivering the isotope ratio precisions that can be routinely obtained by thermal ionization mass spectrometry (0.1% relative standard deviation or better). ICPMS vendors claim 0.5% relative standard deviation (RSD) capability, and we have observed 1.5% RSD for NIST U-500 in solution. A minimum of 500 counts of ^{235}U must be obtained in order to achieve 5% RSD for a $^{235}U/^{238}U$ ratio of 0.002 at an ion counting sensitivity of 500,000 (counts/s)/ppm. This equals 1 μg/L of ^{235}U or 500 μg/L total uranium with a $^{235}U/^{238}U$ ratio of 0.002.

3.5. There is a mass discrimination effect in ICPMS. Run uranium solutions of known isotopic ratio to evaluate the size of this effect and to develop a correction factor that must then be applied to all data. The correction factor on our current instrument is approximately 6% (multiply the measured $^{235}U/^{238}U$ ratio by 1.06 to correct for this mass discrimination effect).

3.6. There are no NIST SRMs for isotopic uranium in water. ICPMS performance has been evaluated by dissolving National Bureau of Standards (NBS) SRM 950b (Uranium Oxide, U_3O_8) and NBS SRM 960 (Uranium Metal), which are certified for their U^{235}/U^{238} ratio, and diluting with distilled water. Results are tabulated below.

U^{235}/U^{238} in Water			
Sample	Date	EM-9 ICPMS	NBS Value
NBS 950b	1988	0.0069 ± 0.0001	0.0073 ± 0.0001
NBS 960	1986	0.0072 ± 0.0004	0.0073 ± 0.0001
	1987	0.0070 ± 0.0003	0.0073 ± 0.0001
	1988	0.0071 ± 0.0002	0.0073 ± 0.0001

4. Interferences

4.1. High concentrations of dissolved solids can cause build-up and clogging of the nebulizer and torch. Dissolved solids also increase the probability of the combination of two ions to form molecular ion interferences. Include standard additions for unknown matricies to demonstrate the lack of interferences. Recoveries should be between 90% and 110%. Chemical separations may ultimately be required to remove matrix effects or increase sensitivity, especially for isotopic determination.

4.2. There are no solvent, oxide, or doubly charged peaks that interfere with this mass region.

4.3. There are no direct mass overlap interferences from ^{209}Bi, ^{232}Th, ^{235}U, or ^{238}U.

4.4. Direct observation of the $^{235}U/^{238}U$ ratio is required to establish whether calculation of uranium based on the ^{238}U peak alone is appropriate. Calibration standards must be of known uranium isotopics.

5. Collection and Storage of Samples

5.1. Filter and acidify samples with 3% HNO_3 immediately after collection to preclude loss of uranium to container walls.

5.2. Store samples in polyethylene containers.

6. Apparatus

6.1. Inductively coupled plasma mass spectrometer: VG Plasmaquad, equipped with a Gilson Model 221 Autosampler.

6.2. Bottles: 125-mL, polyethylene.

6.3. Pipettes: 100-, 500-, and 1000-μL Eppendorf with disposable tips.

6.4. Flasks: 100- and 1000-mL, volumetric.

6.5. Standard water filtering apparatus to support 0.45-micron filters.

6.6. Beakers: 50-mL, glass, new.

6.7. Hot plate.

6.8. Ion exchange columns: glass, typically around 197 mm long by 7 mm i.d. with a 100-mL top reservoir and a tip tapered to 2 mm i.d. (see Fig. 1).

6.9. Resin: Chelex-100.

6.10. pH paper: for 4 - 5 pH range.

7. Reagents

7.1. NIST SRM U_3O_8. Isotopically certified SRMs 950b, U-0002 thru U-970.

7.2. Thorium solution (100 mg/L). Spex Industries, Inc., Edison, New Jersey.

7.3. Bismuth solution (100 mg/L). Spex Industries, Inc., Edison, New Jersey.

7.4. Magnesuim solution (1000 mg/L). Spex Industries, Inc., Edison, New Jersey.

7.5. Indium solution (1000 mg/L). Spex Industries, Inc., Edison, New Jersey.

7.6. Lead solution (1000 mg/L). Spex Industries, Inc., Edison, New Jersey.

7.7. Nitric acid (concentrated, sub-boiling redistilled).

7.8. Distilled water (highest purity available).

7.9. Ammonium acetate (uranium-free).

7.10. Acetic acid (concentrated, uranium-free).

7.11. Hydrochloric acid (concentrated, uranium-free).

8. Calibration and Standards

8.1. Prepare a multielement instrument optimization solution. Combine 100 μL each of the 1000-mg/L Mg, In, and Pb Spex solutions in a 1000-mL volumetric flask and dilute to volume with 3% (vol/vol) redistilled HNO_3. The resulting optimization solution is 100 μg/L for each of the three metals.

8.2. Standard preparation.

8.2.1. NIST Uranium Isotopic Standards U-0002 through U-970 and NBS SRM 950b (Uranium Oxide, U_3O_8) are used exclusively for the preparation of standard solutions.

8.2.2. Dissolve 117-mg portions of U_3O_8 of the various isotopic compositions in 10 mL of concentrated HNO_3 in a 50-mL beaker on a hot plate. Dilute to 1000 mL in volumetric flasks with high-purity distilled water. Stock solutions are now 100 mg/L total uranium. Discard beakers in radioactive waste to avoid any possibility of isotopic cross-contamination.

8.2.3. Prepare additional dilutions of the concentrated stock just before actual water standard preparation.

8.2.3.1. Dilute 500 μL of concentrated stock to 100 mL with 3% HNO_3. This solution is 500 μg/L.

8.2.3.2. Dilute 100 μL of concentrated stock to 100 mL with 3% HNO_3. This solution is 100 μg/L.

8.2.3.3. Dilute 10 mL of the 500-μg/L uranium solution to 100 mL with 3% HNO_3. This solution is 50 μg/L.

8.2.3.4. Dilute 10 mL of the 100-μg/L uranium solution to 100 mL with 3% HNO_3. This solution is 10 μg/L.

8.2.3.5. Dilute 1.0 mL of the 100-μg/L uranium solution to 100 mL with 3% HNO_3. This solution is 1.0 μg/L.

8.2.3.6. Dilute 1.0 mL of the 100-μg/L uranium solution to 1000 mL with 3% HNO_3. This solution is 0.1 μg/L.

8.3. Internal standard.

8.3.1. Prepare a 0.1-mg/L Bi or Th solution by diluting 1.0 mL of the 100-mg/L Bi or Th Spex solution to volume in a 1000-mL volumetric flask with 3% (vol/vol) HNO_3.

9. Procedure

9.1. Preparation of samples and standards for total uranium determination.

9.1.1. Label and fill each sample tube for the autosampler with the sample or standard solutions spiked with the internal standard.

9.1.2. Place the sample tubes in the autosampler rack in the following order:

Sequence	I.D.
1	Blank
1	Blank
2	0.1-μg/L multielement standard
2	1.0-μg/L multielement standard
4	10.0-μg/L multielement standard
7	500-μg/L multielement standard

Sequence	I.D.
1	Blank
5	50.0-μg/L multielement standard
6	100-μg/L multielement standard
8	QA sample (A)
9	15 samples
23	QA sample (B)
14	Blank
15	1.0-μg/L multielement standard
17	10.0-μg/L multielement standard
16	50.0-μg/L multielement standard

9.2. Refer to the VG Plasmaquad operation manual (Source Material 12.1) for details of the start up procedure.

9.3. Check the instrument performance using the 100-μg/L multielement optimization solution of Mg, In, and Pb.

9.4. Set the ICPMS parameters as follows:

- Number sweeps 240.
- Dwell time 250 μs.
- Mass range 208 - 241.
- Number of channels 1024.

9.5. Select the following isotopes: ^{235}U, ^{238}U, and either ^{209}Bi or ^{232}Th, depending upon which was selected for spiking as the internal standard.

9.6. A rinse time of 60 s with 3% HNO_3 between samples is suitable for routine use.

9.7. Sample preconcentration for uranium isotope determination.

9.7.1. At least a 500-mL sample is required for natural waters with typical uranium concentrations of 1 μg/L .

9.7.2. Add 2 g of ammonium acetate and 5 mL of concentrated acetic acid to the 500-mL sample. Check pH with appropriate range pH paper to establish that the sample is in the range of 4.0 - 4.5. Add additional ammonium acetate and acetic acid (in same ratio as above) until this pH range is achieved. Chelex-100 has a high distribution coefficient for uranium at this pH.

9.7.3. Prepare a short ion exchange resin bed (4-cm by 1-cm) of Chelex-100 packed under water in the ion exchange columns described in Step 6.8.

9.7.4. Pour the sample through the column at flow rates of up to 15 mL/min (5 drops/s).

9.7.5. Elute the uranium with 10 mL of 1 M HCl.

9.8. Uranium isotopic analysis on ICPMS.

9.8.1. Set the ICPMS parameters as follows:

- Select isotopes 235 and 238.
- Mass range 230 - 240.
- Dead time 180 ns.
- Sweeps 500.
- Dwell time 200 ms.
- MCA 1024 channels.

10. Operation of Instrument

10.1. Details for operation of the VG Plasmaquad are documented in the instrument operting manual (Source Material 12.1).

10.2. Check the Ar gas gauge pressures for the ICPMS. The desired pressures are shown below.

Gas	Tank	Plasma	Aux	Nebulizer
Argon	>80psi	15 L/min	L/min	0.70 L/min

11. Calculations

11.1. Manual data reduction.

11.1.1. Calculate the percent change in the internal standard mass area for each sample and standard, and correct each mass area response by its corresponding change in internal standard mass area.

11.1.2. Construct calibration curves from counts/s versus concentration graphs from the standards.

11.1.3. The total uranium concentration in a sample is determined from those calibration curves by reading the concentration of the sample directly from the appropriate curve using the counts/s response of the sample.

11.1.4. The $^{235}U/^{238}U$ ratio is calculated using the following formula:

$$^{235}U/^{238}U = \frac{(A - B) \times F}{(C - D)} ,$$

where A = gross peak area for ^{235}U in sample,
B = gross peak area for ^{235}U in blank,
C = gross peak area for ^{238}U in sample,
D = gross peak area for ^{238}U in blank, and
F = mass discrimination correction (1.06).

11.2. Computer data reduction.

11.2.1. Enter data into a spreadsheet using LOTUS 1-2-3 for the calculations.

11.2.2. Construct a least squares linear calibration curve using the Lotus 1-2-3 spreadsheet linear least squares program (Data Regression Option).

11.2.3. Correct samples and standard counts for instrument drift using Bi (soil extracts) or Th (water) internal standard peak areas and then correct for blank contribution.

11.2.4. Calculate the isotopic ratio using corrected peak areas for ^{235}U and ^{238}U. The desired precision determines the minimum peak areas that are acceptable. One thousand counts in the smaller peak achieve ±3% RSD (equivalent to 500 ppb total uranium at natural isotopic abundance). Multiply these results by the mass discrimination factor (currently 1.06).

12. Source Materials

12.1. VG Isotopes Plasmaquad Operation Manual.

12.2. National Institute of Standards and Technology Certificates of Analysis, Standard Reference Materials U-0002 to U-970.

12.3. E. S. Gladney, R. J. Peters, and D. R. Perrin, "Determination of Uranium-235/Uranium-238 Ratio in Natural Waters by Chelex 100 Ion Exchange and Neutron Activation Analysis," *Analytical Chemistry* **55**, 976-977 (1983).

12.4. M. A. Gautier, E. S. Gladney, and D. R. Perrin, "Quality Assurance for Health and Environmental Chemistry: 1984," Los Alamos National Laboratory report LA-10508-MS (1985).

12.5. M. A. Gautier, E. S. Gladney, W. D. Moss, M. Phillips, and B. T. O'Malley, "Quality Assurance for Health and Environmental Chemistry: 1986," Los Alamos National Laboratory report LA-11114-MS (1987).

12.6. M. A. Gautier, E. S. Gladney, M. Phillips, and B. T. O'Malley, "Quality Assurance for Health and Environmental Chemistry: 1987," Los Alamos National Laboratory report LA-11454-MS (1988).

12.7. M. A. Gautier, E. S. Gladney, M. Phillips, and B. T. O'Malley, "Quality Assurance for Health and Environmental Chemistry: 1988," Los Alamos National Laboratory report, LA-11637-MS (1989).

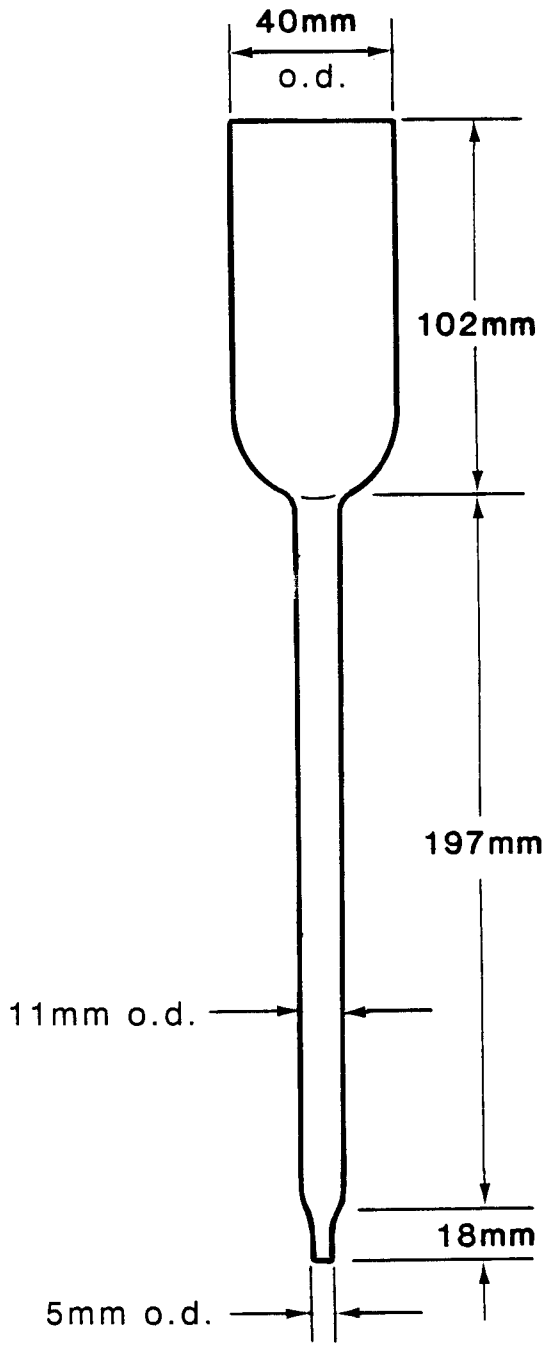

Fig. 1. Ion exchange column.

DEPLETED URANIUM IN SOILS – IENA

Analyte: Uranium	**Method No.:** ER300
Matrices: Soils	**Minimum Detectable Concentration:** 1.0 μg/g
Procedure: Instrumental epithermal neutron activation (IENA) analysis	**Accuracy and Precision:** 100% ± 5% at 50 μg/g total uranium
Effective Date: 01/01/77 to 08/01/92	**Author:** Ernest S. Gladney

SAFETY NOTE: Before beginning this procedure, read all of the Material Safety Data Sheets for the chemicals listed in Sec. 7. Read Sec. 4.3 of the EM-9 Safety Manual for information on personal protective clothing and equipment.

1. Principle of Method

1.1. Silicate materials (primarily soils) that may have been contaminated by uranium of altered isotopic abundance cannot be accurately analyzed by methods that focus on ^{235}U. If the potential contaminant is depleted uranium (lower ^{235}U content than natural abundance), the samples can readily be analyzed by nuclear methods that focus on ^{238}U because it constitutes at least 99.4% of the total uranium.

1.2. Epithermal neutron activation uses the ^{238}U(n,γ)^{239}U reaction, detecting the gamma ray emitted by either the 23.5-min ^{239}U or its 2.35-d ^{239}Np decay product. Samples are irradiated in the epithermal neutron flux of the Omega West Reactor to activate uranium. Induced radioactivity is observed on either low-energy photon detectors or on large Ge(Li) detectors multiplexed to 4096-channel, pulse-height analyzers. All determinations are performed instrumentally without the use of chemical separation. Quantitative data on uranium concentrations are obtained by concurrent measurement of rocks or ores of known uranium content and isotopic ratio. Either the 74.7-keV transition from the 23.5-min ^{239}U or the 278-keV gamma ray from the 2.35-d ^{239}Np may be used to produce quantitative results. The short-lived isotope allows rapid screening of larger numbers of samples, while the longer-lived isotope provides somewhat lower detection limits.

1.3. Epithermal neutron activation reduces the intense levels of activity observed in thermal neutron activation from a number of common major elements in rocks (Al, Mn, Na). This property provides an important advantage for the determination of certain elements that are preferentially activated by epithermal neutrons, those that possess significant neutron capture cross-sectional

resonances in the epithermal region. Uranium falls into this category. Interference from uranium fission product nuclides is also suppressed, since the uranium fission cross section is smaller for epithermal than for thermal neutrons.

2. Sensitivity

2.1. Normally 0.25 μg of uranium can be detected in a 250-mg sample (3σ above background).

3. Accuracy and Precision

3.1. The accuracy of the method is independent of the exact uranium isotope ratio, as long as ^{238}U is at least 99% abundant.

3.2. There are numerous National Institute of Standards and Technology (NIST), United States Geological Survey (USGS), Canadian Certified Reference Materials Project (CCRMP), and International Atomic Energy Agency (IAEA) rock and ore reference materials with certified or well-established consensus values for uranium.

Agency	No.	Certified Value (μg/g)	EM-9 Values ^{239}Np (μg/g)	EM-9 Values ^{239}U (μg/g)
CCRMP	SY-2	284	254 ± 10	291 ± 30
	SY-3	650	647 ± 10	617 ± 30
	MRG-1	0.24	<1	<1
	BL-1	220	213 ± 12	226 ± 7
	BL-2	4530	4200 ± 280	4510 ± 200
	BL-3	10200	9600 ± 220	10200 ± 100
	BL-4	1730	1700 ± 15	1730 ± 40
	DH-1	1770	1650 ± 50	1800 ± 140
	DL-1	41	43 ± 4	41 ± 2
IAEA	S-2	2660	2920 ± 150	2650 ± 20
	S-3	3540	3700 ± 160	3440 ± 170
	S-4	3180	3300 ± 30	3230 ± 60
Junta de Energia Nuclear, Madrid, Spain				
	25	1200	1230 ± 100	1150 ± 80
	33	4470	4440 ± 200	4190 ± 200
	463	339	330 ± 12	302 ± 8
	467	119	137 ± 20	129 ± 11

4. Interferences

4.1. Isotopes emitting X-rays in the 75-keV region will create positive interference, but this has not been observed in routine samples.

4.2. Uranium fission products interfere with many of the gamma rays from ^{239}Np. The 278-keV peak appears to be interference free.

5. Collection and Storage of Samples

5.1. There are no special collection and storage requirements.

6. Apparatus

6.1. Pipettes with disposable tips: 50-μL, Eppendorf.

6.2. Vials: polyethylene, snap-cap, Beem Size No. 3 (small), Ladd Research, Burlington, Vermont.

6.3. Vials: polyethylene, 4-mL, Omega West Reactor irradiation "rabbits."

6.4. Filter paper: 4.25-cm-diam, Whatman.

6.5. Filter supports: polyethylene caps from 250-mL Nalgene bottles.

6.6. Tweezers: stainless steel.

6.7. Polyethylene film: 1-mil-thick by 1.5-in.-wide flat tubing.

6.8. Nuclear reactor: Los Alamos Omega West Reactor, with boron-filtered epithermal irradiation facility.

6.9. Analytical balance: top loading with 1-mg sensitivity.

6.10. Gamma-ray spectrometry system.

7. Reagents

7.1. Nitric acid (concentrated, reagent-grade).

7.2. Uranium standard solution (1000 μg/g): Spex Industries, Inc., Metuchen, New Jersey.

7.3. Gold standard solution (1000 μg/g): Spex Industries, Inc., Metuchen, New Jersey.

7.4. Distilled water (highest purity available).

8. Calibration and Standards

8.1. Any silicate material with certified uranium concentration may be used, so long as the $^{235}U/^{238}U$ ratio is less than 0.01. Treat these materials in the same manner as the samples beginning with Step 9.2.1.

8.2. Preparation of filter standards.

8.2.1. Prepare at least three filter standards. Place 250-mL polyethylene bottle caps upside down and insert a new 4.25-cm Whatman filter into each cap. Carefully pipette 50 μL of the 1000 μg/g uranium standard solution onto separate filters, spotting the drops uniformly about the face of the filter. Be sure that no liquid touches the edge or the filter holders. Discard any filters where liquid touches the holder and wash the holder in 7 N nitric acid. Prepare several filter blanks to check for uranium background in the standards.

8.2.2. Air dry the standard filters, roll to fit the Beem vials, insert individually, and close the snap-cap lids.

8.3. Preparation of flux monitors.

8.3.1. Place 250-mL polyethylene bottle caps upside down and insert a new 4.25-cm Whatman filter into each cap. Carefully pipette 50 μL of concentrated gold stock solution onto separate filters, spotting the drops uniformly about the face of the filter. Be sure that no liquid touches the edge or the filter holders. Discard any filters where liquid touches the holder and wash the holder in 7 N nitric acid.

8.3.2. Air dry the flux monitor filters, roll to fit the Beem vials, insert individually, and close the snap-cap lids.

9. Procedure

9.1. Sample preparation is ordinarily done by the customer and usually consists of drying and grinding the silicate material.

9.2. Sample packaging.

9.2.1. Weigh samples individually into Beem vials. Be sure to tare each vial before filling. Number the outside of the Beem vials with a black "Sharpie" marker. This marker has a very low trace element background.

9.2.2. If the short-lived ^{239}U activity is to be used, insert only one sample into each irradiation rabbit, fill the remaining space with polyethylene film

or empty Beem vials, and screw on one gold flux monitor cap. If the longer-lived ^{239}Np activity is to be used, insert two samples into an irradiation rabbit, fill the remaining space with polyethylene film or empty Beem vials, and screw on one gold flux monitor cap. Since flux gradients in the epithermal irradiation facility can be severe (up to 10% over the length of the first rabbit alone), each irradiation position within the rabbit must be calibrated separately.

9.2.3. Package standards in the same manner as samples. Place a flux monitor in the same position in each rabbit.

9.3. Irradiate the rabbits one at a time in the epithermal facility of the Los Alamos Omega West Reactor for 15 min. Be sure to record the time at the end of irradiation. For best results, request that the operators push the samples completely into the irradiation facility with a plastic rod rather than use pneumatic insertion. This gives a much more reproducible positioning within the boron shield.

9.4. If the ^{239}U isotope is used, count all samples at the face of a low-energy photon Ge(Li) or Si(Li) detector after a 15-min decay period. If the ^{239}Np activity is used, count all samples the next day at the face of high-resolution Ge(Li) or intrinsic Ge gamma-ray detectors, multiplexed to 4096-channel, pulse-height analyzers. In either case, store the gamma-ray spectra on disc for off-line data reduction. Note the beginning-of-count time, detector, counting geometry, and computer file number in a Laboratory notebook.

NOTE: Data reduction is simplified if all samples from the first irradiation position are counted in the same geometry on the same detector and the samples from the second irradiation position are counted in the same geometry on the same detector.

9.5. Count all standards from the first irradiation position in the same geometry and detector as samples from the first position. Treat the standards from the second irradiation position in the same manner as the samples from the second irradiation position.

9.6. Flux monitors may be counted on any detector but they must ALL be counted in the SAME geometry on the SAME detector.

9.7. Counting times may vary with the activities of the samples. For the ^{239}U, 1000-s count times are used. For ^{239}Np, count until 10,000 counts are observed in the gamma-ray lines of interest, or for 1000 s, whichever is shorter. Flux monitors normally require only 5-min counts.

10. Operation of Equipment

10.1. See the gamma-ray spectrometry instrument procedure (Method No. CR400).

11. Calculations

11.1. Either the 74.7-keV gamma ray from ^{239}U or the 278-keV gamma ray from ^{239}Np (daughter of the decay of ^{239}U) are numerically integrated in each spectrum, using the EM-9 GAMS computer program for digital integration of the gamma-ray spectra. Quantitation may be approached in two ways.

11.2. Multipoint calibration method.

11.2.1. Correct each gamma-ray peak for decay from beginning-of-count back to time-out-of-reactor and for variations in neutron flux using the following equation:

$$B = \frac{Ae^{\lambda(t1 - t2)}}{F} ,$$

where B = decay-corrected peak area,
A = integrated peak area,
λ = decay constant (0.693/half-life of isotope),
t1 = beginning-of-count time,
t2 = time-out-of-reactor time, and
F = decay-corrected peak area from gold flux monitor.

11.2.2. Plot the standard curves on 3-cycle log-log graph paper with the element concentration on the x-axis and the net peak area on the y-axis. Fit the curve to the data using least-squares or linear regression techniques (see Fig. 1).

11.2.3. Read the sample concentrations from the calibration curve using the decay- and flux-corrected net peak areas.

11.3. Since neutron activation is linear over 3 to 4 orders of magnitude of concentration, single-point calibration methods may be used if one is careful to determine the range of linearity through experience.

11.3.1. All calculations may be performed in a single equation using only one standard concentration:

$$Z = \frac{B_1 \times C \times F_2}{B_2 \times F_1 \times W} ,$$

where Z = final elemental concentration (μg/g),
B_1 = decay-corrected sample peak area,
B_2 = decay-corrected standard peak area,
C = standard concentration (μg),
F_1 = decay-corrected sample flux from gold flux monitor,
F_2 = decay-corrected standard flux from gold flux monitor, and
W = sample weight (g).

11.3.2. To obtain decay corrections for B_1 and B_2, use the equations from Step 11.2.1.

12. Source Materials

12.1. E. S. Gladney, W. K. Hensley, and M. M. Minor, "Comparison of Three Techniques for the Measurement of Depleted Uranium in Soils," *Anal. Chem.* **50**, 652-653 (1978).

12.2. E. S. Gladney, J. W. Owens, and J. W. Starner, "Simultaneous Determination of Uranium and Thorium in Ores by Instrumental Epithermal Neutron Activation Analysis," *Analytica Chimica Acta* **104**, 121-127 (1979).

12.3. E. S. Gladney, D. B. Curtis, D. R. Perrin, J. W. Owens, and W. E. Goode, "Nuclear Techniques for the Chemical Analysis of Environmental Materials," Los Alamos Scientific Laboratory report LA-8192-MS (1980).

12.4. M. A. Gautier, E. S. Gladney, and B. T. O'Malley, "Quality Assurance for Health and Environmental Chemistry: 1985," Los Alamos National Laboratory report LA-10813-MS (1986).

12.5. E. S. Gladney, D. R. Perrin, J. P. Balagna, and C. L. Warner, "Evaluation of a Boron-Filtered Epithermal Neutron Irradiation Facility," *Anal. Chem.* **52**, 2128-2132 (1980).

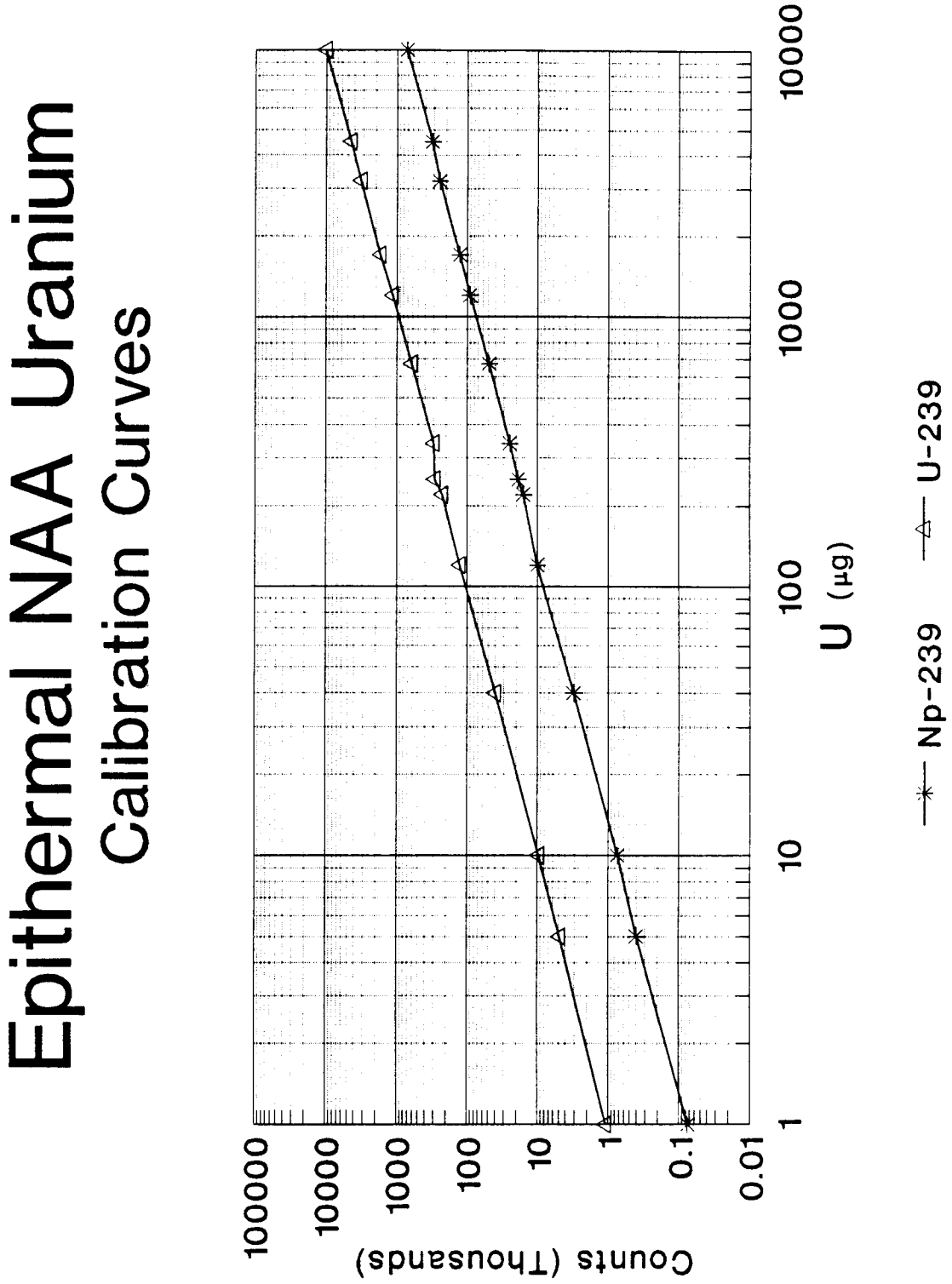

Fig. 1. Epithermal neutron activation analysis (NAA) uranium calibration curves.

PETROLEUM HYDROCARBONS, TOTAL RECOVERABLE IN SOIL
MOBILE LABORATORY METHOD

Analyte: Petroleum hydrocarbons	**Method No:** MLO274
Matrix: Soil	**Detection Limit:** 500 μg/kg
Procedure: Extraction with fluorocarbon-113 and infrared spectrophotometry	**Accuracy and Precision:** Unknown
Effective Date: 04/03/93	**Author:** Stuart D. Nielsen Matthew Monagle

SAFETY NOTE: Before beginning this procedure, read all of the Material Safety Data Sheets for the chemicals listed in Sec. 7. Read Sec. 4.3 of the EM-9 Safety Manual for information on personal protective clothing and equipment. Read Sec. 11 of this procedure and Source Material 12.2 for proper waste disposal practices.

1. Principle of Method

1.1. This method is a modification of EPA Method 418.1 (Storet No. 45501), which uses a water matrix instead of a soil matrix.

1.2. Hydrocarbons are extracted from a known weight of soil with fluorocarbon-113 (1,1,2-trichloro-1,2,2-trifluoroethane) or equivalent and the extract is analyzed by infrared spectrophotometry.

1.3. This method is applicable to the measurement of all types of aliphatic hydrocarbon mixtures, although significant amounts of the more volatile hydrocarbons may be lost during sample collection and manipulation.

2. Range and Detection Limit

2.1. With the sample diluted so that its absorbance is between 0.1 and 1.0 absorbance units, the method can detect from 0.6 μg of hydrocarbon in the sample to pure aliphatic hydrocarbon.

2.2. The lower limit of quantitation of this method was found to be 0.5 μg of hydrocarbon per milliliter of extract, which corresponds to 500 μg/kg of soil.

3. Accuracy and Precision

3.1. Accuracy and precision data are not currently available.

4. Interferences

4.1. Any compound that contains an aliphatic carbon-hydrogen bond interferes because the method measures the aliphatic carbon-hydrogen stretch band in the infrared spectrum of the analyte.

5. Advantages and Disadvantages

5.1. An advantage of the method is that it automatically measures the sum of all aliphatic hydrocarbons in the soil sample with one simple measurement.

5.2. A disadvantage of the method is that all compounds present containing aliphatic carbon-hydrogen bonds will be counted as aliphatic hydrocarbons.

6. Apparatus

6.1. Infrared spectrophotometer.

6.2. Analytical balance: capable of weighing to at least 100 g with an accuracy of at least four decimal places.

6.3. "VOA" vials: 45-mL, as received from the manufacturer (I-Chem or equivalent).

6.4. Glass pipettes.

6.5. Spectrometer cells: 1- or 5-cm-path-length, quartz.

7. Reagents

7.1. Fluorocarbon-113 (1,1,2-trichloro-1,2,2-trifluoroethane, reagent-grade) or equivalent.

7.2. Aliphatic hydrocarbon mixture to use as a standard. A light mineral oil is the preferred standard, although gasoline, kerosene, or diesel fuel can be used.

8. Calibration and Standards

8.1. Although the standard curve is theoretically linear from zero absorbance to infinite absorbance, precision and accuracy for any infrared determination are highest when the absorbance is between 0.1 and 1.0 absorbance units.

8.2. Calibration standards.

8.2.1. Stock standard. Weigh 2-5 mg of the standard hydrocarbon mixture into a tared VOA vial. Record the weight. Add 12.0 mL of fluorocarbon-113 to the vial.

8.2.2. Working standards. Dilute portions of the stock standard to give at least three standards with concentrations between 40 and 400 μg/mL. This should give a standard curve between approximately 0.1 and 0.9 absorbance units.

9. Procedure

9.1. Weigh 10-11 g of the soil sample into a tared VOA vial. Record the weight on the benchsheet.

9.2. Add 10 mL of fluorocarbon-113 to the vial. Cap the jar and shake vigorously. Shake the sample on a shaker table for 30 min to completely extract the hydrocarbons.

9.3. Allow the soil to settle. Fill a clean infrared cell with the supernatant liquid.

9.4. Determine the absorbance for each sample and standard over the range from 2700 cm^{-1} through 3100 cm^{-1} using pure fluorocarbon-113 as a reference.

9.5. If the absorbance exceeds 0.9, prepare an appropriate dilution and redetermine the absorbance.

10. Calculations

10.1. Measure the peak absorbance at approximately 2930 cm^{-1}. Measure background absorbances on both sides of the peak cluster at approximately 2800 cm^{-1} and 3010 cm^{-1}.

10.2. Calculate the background at 2930 cm^{-1} by interpolation between the absorbances measured on both sides.

10.3. Calculate the absorbance due to the sample by subtracting the calculated background at 2930 cm^{-1} from the peak absorbance.

10.4. Plot a standard curve from the data for the standards by plotting the absorbances vs. the concentrations in μg/mL.

10.5. Determine the concentration of petroleum hydrocarbons in the extract by comparing the absorbance against the standard curve.

10.6. Calculate the petroleum hydrocarbons in the sample using the following equation.

$$\mu g/g \text{ of soil} = \frac{(C \times V \times D)}{W} ,$$

where C = concentration determined from standard curve,
V = volume of extractant solvent used,
D = extract dilution factor, if necessary, and
W = weight of soil used (g).

11. Proper Waste Disposal Practices

11.1. General waste management.

11.1.1. Each analyst within the section shall be given Waste Generator Training by EM-8 within 90 days of the date of hire.

11.1.2. Wherever possible, minimize the generation of waste through reduction, reuse, or recycling. Wherever possible, segregate containers to reflect the nature of the hazardous waste and the eventual waste disposal methods. For example, chlorinated solvent wastes should be segregated from flammable, nonchlorinated solvents and > 50-ppm contaminated waste should be segregated from <50-ppm PCB contaminated waste. This is especially important in analysis areas where the waste generated is considered to be mixed waste.

11.1.3. Categorize the waste using an EM-8 Waste Profile Form.

11.1.4. Upon completion of the Waste Profile Form, dispose of the waste by completing a Waste Disposal Request Form from EM-7. Approximately 30 days is required for the disposal of waste after the completion of the listed forms.

11.2. Solid waste.

11.2.1. Accumulate solid hazardous waste, such as contaminated paper towels, pipettes, spent syringes, and glass vials, in a covered plastic container lined with a plastic bag. Label the container with a hazardous waste label identifying the hazard, the type of material being stored (i.e., pipettes, paper towels, etc.), the accumulation start date, and the laboratory of origin.

11.2.2. Open the waste container only for the time necessary to add the waste.

11.3. Liquid waste.

11.3.1. Accumulate liquid wastes, such as spent samples and spent solvents that are not reusable, in glass or steel containers appropriate for the type of sample being stored. For example, store caustic materials in glass containers and spent solvents that are not to be recycled in metal containers.

11.3.2. Place all containers storing hazardous liquid materials within secondary containment. Label the container with a hazardous waste label which identifies the hazard, type of material being stored (i.e., pipettes, paper towels, etc.), the accumulation start date, and the laboratory of origin.

11.3.3. Open the waste container only for the time necessary to add the waste.

11.4. Unused samples.

11.4.1. Return unused environmental samples to the Sample Management section for disposal.

12. Source Materials

12.1. "Petroleum Hydrocarbons, Total Recoverable," EPA Method 418.1 (Spectrophotometric, Infrared), Storet No. 45501 (1978).

12.2. "Hazardous and Mixed Waste," Administrative Requirement 10-3 in *Environment, Safety, and Health Manual*, chapter 1 of Los Alamos National Laboratory Manual (most recent edition).

POLYCHLORINATED BIPHENYLS (PCBs) IN SOIL
MOBILE LABORATORY METHOD

Analyte: Polychlorinated biphenyls	**Method No.:** MLO410
Matrix: Soil and miscellaneous solids	**Minimum Detection Limit:** 0.06 μg/g
Procedure: Capillary gas chromatography with electron-capture detection.	
Effective Date: 08/01/91	**Author:** Matthew Monagle Jeff Roberts

SAFETY NOTE: Before beginning this procedure, read all of the Material Safety Data Sheets for the chemicals listed in Sec. 7. Read Sec. 4.3 of the EM-9 Safety Manual for information on personal protective clothing and equipment. Read Sec. 12 of this procedure and Source Material 13.1 for proper waste disposal practices.

1. Principle of Method

1.1. This method is applicable to the determination of the following analytes:

Analyte	Chemical Abstract Service Registry Number
Arochlor 1016	12674-11-2
Arochlor 1221	11104-28-2
Arochlor 1232	11141-16-5
Archolor 1242	53469-21-9
Arochlor 1248	12672-29-6
Archolor 1254	11097-69-1
Archolor 1260	11095-82-5
Archolor 1262	37324-23-5

1.2. The applicability of this method for the determination of analytes other than those listed above must be demonstrated by the analyst.

1.3. Actual detection limits may vary from those listed above because detection limits are highly dependent upon chromatographic conditions and the unique matrix of any given sample.

1.4. This method is restricted to use by or directly under the supervision of analysts experienced in the use of gas chromatography and the interpretation of chromatographic data.

1.5. Although this procedure is designed to be detailed and comprehensive, it must be understood that situations may arise that require deviation from this procedure. This is particularly true of interpretation of chromatographic data. These deviations will be made at the discretion of the analyst and his/her supervisor and must be thoroughly documented.

2. Summary of Method

2.1. Samples are extracted into a suitable solvent.

2.2. Sample are cleaned up and/or diluted as necessary.

2.3. Samples are analyzed using a gas chromatograph and data is reduced using the associated data system.

2.4. Collected data is reviewed by a qualified analyst and the Arochlor(s) are identified and quantitated.

2.5. Applicable work is documented according to accepted laboratory operating procedures, and must satisfy all regulatory compliance requirements.

3. Sample Collection, Preservation, and Storage

3.1. Soil samples are placed in clean glass bottles and sealed with Teflon-lined caps.

3.2. Each sample is placed in a separate sealed glass bottle.

3.3. No preservation is required if the samples are submitted within 2 h of collection; otherwise the samples must be kept at 4°C until extracted and analyzed.

4. Interferences

4.1. Interference may be caused by contaminants in solvents, reagents, glassware, and other sample-processing equipment that lead either to discrete artifacts or elevated baselines in gas chromatograms.

4.1.1. The use of high-purity solvents and other chemicals will help to minimize interference.

4.1.2. Scrupulous cleaning of glassware and other equipment will help to minimize interference.

4.1.3. Strict adherence to standard laboratory practices will help minimize analyst-generated interferences.

4.2. Matrix interferences pose a significant problem in PCB analyses. Each sample may be cleaned up and/or diluted before analysis as necessary.

5. Safety

5.1. The toxicity and carcinogenicity of chemicals used in this method have not been precisely defined. Each chemical should be treated as a potential health hazard, and exposure minimized. Each person using this procedure shall know where the Material Safety Data Sheets (MSDSs) are located and shall have read them before using the chemicals.

5.2. PCB products have been tentatively classified as known or suspected human or mammalian carcinogens. Pure standard materials and stock standard solutions of these compounds should be handled with gloves in a fume hood.

5.3. Since the chemical composition of the samples is unknown, all samples shall be considered potentially hazardous, and must be handled and extracted in a fume hood.

5.4. All gas cylinders shall be secured and fitted with the proper regulators and fittings.

5.5. Two waste containers shall be available for the disposal of PCB contaminated waste: one for waste containing <500 ppm PCBs, the other for waste containing >500 ppm PCBs. These containers shall be properly labeled and shall be disposed of by EM-7.

5.6. The laboratory will make safety glasses available for all persons present in the laboratory, including guests. Safety glasses must be worn at all times by every person in the laboratory whenever operations requiring safety glasses are being performed by anyone in the laboratory.

5.7. The laboratory will make protective gloves, suitable for the chemicals used, available for employees. These are to be worn whenever contact with samples or chemicals is possible.

5.8. The laboratory will provide employees with protective aprons or lab coats that. are suitable for the chemicals used.

5.9. No one is allowed to perform laboratory work unless there is at least one other person in the immediate vicinity who is aware that laboratory work is being performed.

6. Apparatus

6.1. Electronic balance: capable of measurement to three decimal places.

6.2. Nitrogen evaporation apparatus with multiple sample capacity: Organomation N-EVAP, Model 111 or equivalent.

6.3. Beakers: glass, 100-, 150-, 250-, 400-, and 600-mL capacity.

6.4. Microliter syringes: assorted sizes.

6.5. Volumetric flasks: 1- to 25-mL, with ground-glass stoppers.

6.6. Sonicator bath.

6.7. Automatic liquid sampler (ALS) vials: 1-mL, with Teflon-lined crimp-seal caps.

6.8. Capping and uncapping device for ALS vials.

6.9. Gas chromatography system including:

- heated injection port,
- temperature programming capabilities,
- appropriate detection system,
- electronically controlled autosampler, and
- complete data system.

7. Reagents

7.1. Methylene chloride (Baker Resi-analyzed).

7.2. Acetone (Baker Resi-analyzed).

7.3. Methanol (HPLC-grade).

7.4. Hexane (pesticide-grade).

7.5. Reagent water (deionized). Charcoal filtered and/or distilled water demonstrated to be free from interferences.

7.6. Sodium sulfate (granular). Muffle overnight at 400°C. Alternatively, it can be Soxhlet-extracted with methylene chloride prior to use. Store in a covered container.

7.7. Stock standard solutions.

7.7.1. Prepare stock standard solutions within a concentration range of 20-50 mg/L by dilution of a certified solution or by accurately weighing the neat material and diluting to volume with hexane or iso-octane. If the purity of the neat material is assayed to be 96% or greater, the

weight can be used without correction to calculate the concentration of the stock standard solution.

7.7.2. Transfer the stock standard solutions into Teflon-sealed screw-cap glass bottles and store at 4°C. These standards may be kept for up to one year.

7.8. Secondary (calibration, working) standards.

7.8.1. Prepare calibration standards at a minimum of three concentration levels for each parameter of interest by dilution of the stock standards with hexane. One of the concentrations should be at or near the method detection limit. The subsequent standards should define the working linear range of the GC. Add a surrogate, 2,4,5-tribromobiphenyl, to each secondary standard at a level of 260 μg/L.

7.8.2. Transfer the secondary standards to Teflon-sealed, screw-cap glass bottles and store at 4°C. Secondary standards may be kept for up to six months.

7.9. Surrogate standard.

7.9.1. The surrogate compound in use is 2,4,5-tribromobiphenyl. The surrogate will be added to every sample run to monitor the performance of the extraction, cleanup, and analytical system. The surrogate standard will be prepared at a level of 2.6 mg/L. The surrogate will be spiked in each matrix to give a final concentration of 260 mg/L.

7.10 Matrix spike standard.

7.10.1. Matrix spikes are composed of any one of the three Arochlor mixtures. The matrix spike solution should be made to deliver a recovery amount somewhere in the middle of the calibration range of the instrument. The matrix spike solution will be made using methanol as a solvent.

8. Analytical Conditions

8.1. Gas chromatographic conditions are established in accordance with the requirements of the individual analyst. The following criteria must be met:

- Sufficient resolution to allow accurate identification and quantitation.
- Sufficient sensitivity to allow accurate quantitation to the minimum detection limit.
- Sufficient ability for the system to thermally clean itself to minimize sample carryover and/or elevated baselines.

9. Quality Assurance and Data Interpretation Requirements

9.1. The Quality Control (QC) requirements are defined in a tiered structure as follows:

Tier 1: 1-point calibration every day.
1 method blank every day.

Tier 2: 3-point initial calibration, daily check standard.
BFB tune check every day.
1 method blank every day.

Tier 3: 5-point initial calibration, daily check standard.
BFB tune check every day.
1 method blank per analytical batch.
Blind QC samples at a rate of no more than 10%.
Matrix spike and matrix spike duplicate for each analytical batch.
12-h clock for tune check and daily check standard.

9.2. Under Tier 2 and Tier 3 QC requirements, blanks are analyzed at a frequency of one for every 20 samples of similar matrix, or whenever samples are extracted by the same procedure, whichever is more frequent. The method blank should contain less than the reporting limit of any Arochlor mixture, and should not contain extraneous peaks that could inhibit the accurate quantitation or identification of any Arochlor.

9.3. Matrix spike and matrix spike duplicate recovery are required for Tier 2 QC. In order to demonstrate the efficacy of the extraction procedure on any given matrix, the recovery of the spiking compound is monitored. The sample chosen to be spiked should be representative of the samples from a given project.

9.3.1. Under Tier 3 QC requirements, matrix spike and matrix spike duplicate data are generated for every 20 samples of a given matrix type prepared by the same method.

9.3.2. Matrix spike/matrix spike duplicates and the original unspiked sample must be concentrated to the same final volume and analyzed at the same dilution level. High levels of Arochlors in the matrix may cause the matrix spike and duplicate recoveries to become diluted out.

9.3.3. Spike recovery is evaluated in terms of percent recovery and the relative percent difference (RPD) between the recoveries obtained in the matrix spike and the matrix spike duplicate. Data generated by this methodology will be used to generate control limits for recoveries and RPDs.

10. Procedure

10.1. Cleaning of glassware and equipment.

10.1.1. Glassware and other equipment that will come into direct contact with samples, standards, or reagents must be scrupulously clean to minimize contamination and interferences.

10.1.2. Unused vials, glass bottles, caps, and lids do not need to be washed before use. Clean all previously used glassware and equipment immediately after use by thoroughly rinsing with hexane or with the last solvent used in the glassware. Follow this rinse by washing with hot water and detergent. Rinse thoroughly with tap water, distilled water, and then rinse generously with acetone. Allow glassware to dry in the hood, then dry in a 150°C oven for 1 h.

10.2. Sample extraction. Refer to Method MLO510 for the extraction procedure.

10.3. Identification of PCBs.

10.3.1. Compare sample chromatograms to standard Arochlor chromatograms to determine which, if any, of the Arochlors are present in the sample. Determine which Arochlor or combination of Arochlors, and in what proportion, will produce a chromatogram most similar to that of the sample.

PCBs tend to degrade with age. This may cause the loss of certain peaks, particularly the earlier-eluting peaks, which represent the lower-molecular-weight compounds. This phenomenon can make identification more difficult, particularly if the analyst is not aware of it.

Because of the difficulties involved in the identification of these multicomponent residues, final judgment should be made by an experienced analyst.

11. Quantitation

11.1. Separately quantitate each peak using the curve established earlier. Alternatively, the sum of the peak areas may be used to calculate the concentration of the compounds of interest.

11.2. Average the calculated values for each peak in a given Arochlor to give the extract concentration in μg/mL. Eliminate obvious outliers before averaging.

NOTE: If the calculated values for each peak appear to vary greatly, it may indicate that the Arochlor was incorrectly identified.

11.3. Multiply the resulting number by the volume of solvent used in the extraction procedure. Divide by the initial weight and adjust for dilution if necessary.

12. Proper Waste Disposal Practices

12.1. General waste management.

12.1.1. Each analyst in the section shall be given Waste Generator Training by EM-8 within 90 days of the date of hire.

12.1.2. Wherever possible, minimize the generation of waste through reduction, reuse, or recycling. Wherever possible, segregate containers to reflect the nature of the hazardous waste and the eventual waste disposal methods. For example, chlorinated solvent wastes should be segregated from flammable, nonchlorinated solvents and >50-ppm-contaminated waste should be segregated from <50-ppm PCB-contaminated waste. This is especially important in analysis areas where the waste generated is considered to be mixed waste.

12.1.3. Categorize the waste using an EM-8 Waste Profile Form.

12.1.4. Upon completion of the Waste Profile Form, dispose of the waste by completing a Waste Disposal Request Form from EM-7. Approximately 30 days is required for the disposal of waste after the completion of the listed forms.

12.2. Solid waste.

12.2.1. Accumulate solid hazardous waste, such as contaminated paper towels, pipettes, spent syringes, and glass vials, in a covered plastic container lined with a plastic bag. Label the container with a hazardous waste label identifying the hazard, the type of material being stored (i.e., pipettes, paper towels, etc.), the accumulation start date, and the laboratory of origin.

12.2.2. Open the waste container only for the time necessary to add the waste.

12.3. Liquid waste.

12.3.1. Accumulate liquid wastes, such as spent samples and spent solvents that are not reusable, in glass or steel containers appropriate for the type of sample being stored. For example, store caustic materials in glass containers and spent solvents that are not to be recycled in metal containers.

12.3.2. Place all containers storing hazardous liquid materials within secondary containment. Label the container with a hazardous waste label which

identifies the hazard, type of material being stored (i.e., pipettes, paper towels, etc.), the accumulation start date, and the laboratory of origin.

12.3.3. Open the waste container only for the time necessary to add the waste.

12.4. Unused samples.

12.4.1. Return unused environmental samples to the Sample Management section for disposal.

13. Source Materials

13.1. "Hazardous and Mixed Waste," Administrative Requirement 10-3, in *Environment, Safety, and Health Manual*, Los Alamos National Laboratory Manual, Chapter 1 (most recent edition).

13.2. Test Methods for Evaluating Solid Waste Physical/Chemical Methods, SW-846, 3d ed., 1988.

SEMIVOLATILE ORGANICS IN SOLID MATRICES: SOLVENT EXTRACTION - GC/MS MOBILE LABORATORY METHOD

Analytes: Base Neutral/Acid Extractables (BNAs) Refer to Table VIII	**Method No.:** MLO500
Matrix: Soil, sediment, and sludges	**Minimum Detection Limit:** 1.0-2.0 mg/kg nominal (matrix-dependent)
Procedure: Extraction and concentration of analytes with an appropriate solvent followed by capillary-column GC/MS analysis.	**Accuracy and Precision:** These parameters are analyte-dependent and are greatly influenced by the matrix.
Effective Date: 04/03/93	**Authors:** Martin W. Koby Matthew Monagle

SAFETY NOTE: Before beginning this procedure, read all of the Material Safety Data Sheets for the chemicals listed in Sec. 5. Read Sec. 4.3 of the EM-9 Safety Manual for information on personal protective clothing and equipment. Read Sec. 13 of this procedure and Source Material 14.4 for proper waste disposal practices.

1. Principle of Method

1.1. Analytes are extracted from various matrices using procedure MLO510. Extracts are then concentrated to a small volume (typically 0.3 mL) and analyzed by gas chromatography/mass spectrometry. The mass spectrometer is operated in a scanning, electron-impact (EI) ionization mode. The gas chromatograph is temperature-programmed to effectively separate the wide range of analytes.

Analytes from a wide variety of compound classes can be determined using this method. Table VIII lists the compounds in the current Hazardous Substance List which are analyzed routinely. Table IX contains the Appendix IX list of compounds that are analyzed on a non-routine basis. Table X provides a list of compounds which can be incorporated into an analysis if the need arises. (Tables VIII, IX, and X are found at the end of this procedure.)

1.2. Qualitative analysis is performed by comparing retention time and mass-spectral data of unknowns to those of a standard mix for which the analytical system has been calibrated. EPA-defined criteria are used to establish the validity of a compound identity.

1.3. Quantitation is achieved using the internal standard technique. Once the identity of a compound is determined, quantitation is based on the integrated abundance of a characteristic ion for that compound. This value is compared to the characteristic ion area of the internal standard nearest the retention time of the compound so that a ratio between the two can be determined. Additional factors taken into account include the response factor of the compound being measured, the final volume of extract, and the sample aliquot extracted.

2. Sensitivity

2.1. Practical limits of quantitation are generally in the range of 1 to 2 mg/kg for low-level solid matrices. Matrices that are relatively free of interferences have lower attainable limits of detection than those having large amounts of coextractible material, such as drum waste. Medium-level extracts have a nominal detection limit of 20 mg/kg.

2.2. The values in Step 2.1 are analyte-dependent and can be greatly influenced by matrix constituents, sample inlet conditions, and general analyte reactivity. Response factors tend to show linearity to 180 μg/mL; however, specific compounds may show decreasing chromatographic performance or detector saturation at this concentration.

3. Accuracy and Precision

3.1. Based upon fixed-based laboratory surrogate and spike data, analyte recoveries are typically in the 60-110% range. Recoveries can be expected to vary depending upon the analyte and matrix complexity.

3.2. Long-range precision data is based upon matrix spike and spike duplicate percent recovery and the relative percent difference between the two. Refer to Section 11, Table VII.

4. Interferences

4.1. Any material that will cause an increase in background signal or an elevated baseline or result in discrete chromatographic peaks that are not attributable to target compounds may interfere with the identification and quantitation of a given analyte. Examples are environmental matrices containing high concentrations of humic material, oils, hydrocarbons, lipids, sulfur, or polar material such as alcohols and carboxylic acids.

4.2. Excessive particulate matter in water, extreme alkalinity or acidity, reactive material, intense light, and high temperature can negatively effect analyte recovery.

5. Sample Collection and Storage

5.1. All sampling equipment should be free of introduced contaminants.

5.2. Soil or sediment samples are typically collected in amber or clear glass wide-mouth bottles. Caps should have Teflon liners; however, aluminum foil can be substituted for Teflon if necessary. Excessive headspace should be avoided.

5.3. Samples should be stored, unpreserved, in a refrigerator at 4°C until extraction is initiated.

6. Sample holding times

6.1. Soil or sediment samples must be extracted within 14 d of receipt.

6.2. Sample extracts must be analyzed within 40 d of extraction.

7. Apparatus

7.1. Gas chromatograph/mass spectrometer: GC capable of temperature programming from 25 to 300°C. The mass spectrometer, using electron-impact ionization, must be capable of scanning a mass range 35-500 AMU in 1.0 s or less.

7.2. Data system: capable of initiating and controlling data acquisition, storing spectral and chromatographic data, and performing mass-spectral library searches.

7.3. Chromatographic column: 5% methyl phenyl silicone, 30-m x 0.25-mm-i.d. x 0.5-mμ film thickness, J & W DB-5.625 or equivalent.

7.4. Glass vials: 1.8-mL crimp cap, 1.8-, 7-, 10-, 12-, 15-, and 40-mL capacity screw cap with septa.

7.5. Volumetric flasks: 1-, 2-, 5-, 10-, 25-, 50-, 100-, and 250-mL with stoppers.

7.6. Disposable glass pipettes: 1-, 2-, 5-, and 10-mL.

7.7. Adjustable low-volume pipettors: 10- and 250-μL capacity with disposable capillary tips. SMI brand or equivalent.

7.8. Syringes: glass, gas-tight, 10-, 25-, 50-, and 100-μL volume.

8. Reagents

8.1. Methylene chloride (Baker Resi-analyzed).

8.2. Acetone (Baker Resi-analyzed).

8.3. Methanol (HPLC-grade).

8.4. Hexane (pesticide-grade).

8.5. Reagent water (deionized). Charcoal filtered and/or distilled water demonstrated to be free from interferences.

9. Analytical Standards

9.1. All analytical standards are refrigerated at -20°C. Working standards typically have a shelf life of three months. Stock standards are considered usable for at least six months or until degradation becomes apparent.

The following analytical standards are specified by EPA protocol to be used in the analysis of base/neutral acid extractables. They are readily available from any number of chemical suppliers as neat standards or as stock solutions. Currently, we use standard mixes formulated by Ultra Scientific, Inc.

9.2. **Internal Standards** (ISs). The IS compounds are added to extracts immediately prior to instrumental analysis. They are used to facilitate both qualitative and quantitative analysis. Extracts are spiked with an IS mix so that a final concentration of 40 μg/mL of each component is obtained.

9.2.1. Internal standard mix (4000 μg/mL or 2000 μg/mL in CH_2Cl_2) depending on the supplier. This mix is used undiluted and spiked into the samples, blanks, and all calibration standards so that a final concentration of 40 μg/mL is obtained. Internal standards are:

1,4-Dichlorobenzene-d_4
Naphthalene-d_8
Acenaphthene-d_{10}
Phenanthrene-d_{10}
Chrysene-d_{12}
Perylene-d_{12}

9.3. **Decafluorotriphenylphosphine** (DFTPP). DFTPP is used to verify the performance of the mass spectrometer. The DFTPP spectrum must meet established EPA ion abundance criteria before instrument calibration and sample analysis are performed. The working standard DFTPP concentration is 50 μg/mL in methylene chloride.

9.4. **Initial calibration standards**. These standards contain all target compounds of interest at five different concentrations, typically 20.0, 50.0, 80.0, 120.0, and 160.0 μg/mL of each analyte. These standards are made by volumetric dilution

of 2000-μg/mL stock standards with methylene chloride. Appropriate amounts of internal standards and surrogate are included.

9.5. **Daily calibration standards.** These standards contain 50.0 μg/mL of all target compounds of interest in methylene chloride. This standard is used to demonstrate instrument stability in terms of analyte response (response factor) and relative retention time.

10. GC/MS Calibration

10.1. This application uses a slightly polar methyl silicone stationary phase bonded to a fused-silica capillary column, such as the J&W DB-5.625, Supelco SPB-5, or Quadrex 007-2. Column dimensions are nominally 30-m x 0.25-mm-id, 0.50-mμ film thickness.

10.2. The following gas chromatographic parameters are used for data acquisition:

Initial temp.: 50°C	Carrier: He
Initial time: 0.0 min	Flow: 1.0 mL/min
Final temp.: 315°C	Inlet temp.: 280°C
Final time: 20 min	Interface temp.: 300°C
Rate: 15°C/min	

Some variations are allowed for final temperature, final time, and flow rate when they improve the chromatography or analytical performance.

10.3. DFTPP tuning.

10.3.1. The quadrapole mass spectrometer is operated in a scanning electron-impact ionization mode. The spectrometer is tuned with the calibration compound perfluorotributylamine (PFTBA) so that a 50-ng injection of decafluorotriphenylphosphine (DFTPP) results in a spectrum which satisfies the key ion abundance and resolution criteria outlined in Table I.

TABLE I: KEY ION ABUNDANCE AND RESOLUTION CRITERIA

Mass	Ion Abundance Criteria
51	30.0-60.0% of mass 198
68	<2.0% of mass 69
70	<2.0% of mass 69
127	40.0-60.0% of mass 198
197	<1.0% of mass 198

TABLE I (cont)	
Mass	Ion Abundance Criteria
198	base peak, 100% relative abundance
199	5.0-9.0% of mass 198
275	10.0-30.0 % of mass 198
365	>1.00 % of mass 198
441	present but less than mass 443
442	>40.0% of mass 198
443	17.0-23.0% of mass 442

10.3.2. Under Tier Two Quality Control (QC) requirements, these tuning requirements **must** be met and documented before proceeding for each mass spectrometer used for this application. The criteria, once met, are valid for a 12-h period during which standards, samples, and blanks may be analyzed. At the end of the 12-h period, the DFTPP criteria must be met again before continued analysis.

10.4. Initial calibration.

10.4.1. Under Tier Two and Tier Three QC, once the mass spectrometer is hardware tuned it **must be initially calibrated** with a minimum of three or five standard concentrations to demonstrate response linearity. Table II lists those analytes requiring only four initial calibration points. Analyze standards at concentrations of 20, 50, and 160 μg/mL for Tier Two, and 20, 50, 80, 120, and 160 μg/mL for Tier Three. The five-point calibration must meet the USEPA response factor criteria listed below.

TABLE II. COMPOUNDS REQUIRING A FOUR-POINT CALIBRATION USEPA-CLP SOW2/88	
Benzoic acid	2,4-Dinitrophenol
2,4,5-Trichlorophenol	2-Nitroaniline
3-Nitroaniline	4-Nitroaniline
4-Nitrophenol	Pentachlorophenol
4,6-Dinitro-2-methylphenol	

10.4.2. Calculate response factors (RF) for all individual calibration compounds. The percent relative standard deviation (%RSD) for each compound should be less than 30% and **must** be less than 30% for all calibration check compounds (CCC). See Table III.

TABLE III. CONTINUING CALIBRATION CHECK COMPOUNDS FOR WHICH %RSD MUST BE <30.0

Acenaphthene	4-Chloro-3-methylphenol
1,4-Dichlorobenzene	2,4-Dichlorophenol
Hexachlorobutadiene	2-Nitrophenol
N-Nitrosodiphenylamine	Phenol
Di-n-octyl phthalate	Pentachlorophenol
Fluoranthene	2,4,6-Trichlorophenol
Benzo(a)pyrene	

Response factors are calculated using the following equation:

$$RF = \frac{(Ax)\ (Cis)}{(Ais)\ (Cx)},$$

where Ax = area of the characteristic ion for the compound being measured,
Cis = concentration of the internal standard (ng/μL),
Ais = area of the characteristic ion for the nearest internal standard, and
Cx = concentration of the compound being measured (ng/μL).

Percent relative standard deviation is calculated using the following equation:

$$\%RSD = \frac{(SD)}{(RF)} \times 100$$

10.4.3. The minimum average response for system performance check compounds (SPCC) **must** be 0.050 or greater.

10.4.4. Relative retention times of each compound from each standard should agree within 0.06 retention time units.

10.4.5. Under Tier Three QC requirements, if the % RSD for any CCC, or the minimum RF for any SPCC is not met, corrective action must be taken. An individual calibration point or the entire calibration curve may need reanalysis.

10.5. Continuing calibration.

On a daily basis, immediately after DFTPP criteria have been demonstrated, a continuing calibration standard containing 50 μg/mL of each target analyte is analyzed. The relative response factor for each analyte is compared with the corresponding average response factor obtained from the initial calibration.

10.5.1. Under Tier Two and Tier Three QC criteria, each continuing calibration must be evaluated for and meet the criteria listed below:

10.5.1.1. All SPCCs must have a minimum response factor not less than 0.050 (see Table IV).

TABLE IV. SYSTEM PERFORMANCE CHECK COMPOUNDS FOR WHICH AVERAGE RF MUST BE >0.05
N-nitroso-di-n-propylamine
Hexachlorocyclopentadiene
2,4-Dinitrophenol
4-Nitrophenol

10.5.1.2. The percent difference between the continuing calibration relative response factor and the average relative response factor and the average relative response from the initial calibration must not be greater than 25.0% for any CCC. Table III lists these analytes. If this requirement is met, the calibration is assumed to be valid.

The percent difference is calculated using the following equation:

$$\% \text{ Difference} = \frac{RFi - RFc}{RFi} \times 100 \quad ,$$

where RFi = average response factor from the initial calibration, and
RFc = response factor from the current continuing calibration.

10.5.1.3. Under Tier Three QC requirements, the percent difference between the continuing calibration relative response factor and the average relative response from the initial calibration should not be greater than 20.0% for any target compound for which the instrument is calibrated. If the percent difference exceeds this value it is considered as a warning limit.

10.5.2. If the preceding calibration criteria are not met, corrective action is taken and the continuing calibration standard is reanalyzed. If the criteria are still not met, a new three- or five-point initial calibration is performed.

10.5.3. Once all continuing calibration criteria have been met, the method ID file is updated with the current relative retention times (RRTs) and response factors (RFs) before acquiring and processing sample data.

10.5.4. The method ID file contains retention-time and mass-spectral data pertinent to a given target compound list. It is defined and edited by the user and resides on the GC/MS data system.

11. Quality Assurance and Data Interpretation Requirements

11.1. The Quality Control requirements are defined in a tiered structure as follows:

Tier 1: 1-point calibration every day.
1 method blank every day.

Tier 2: 3-point initial calibration, daily check standard.
BFB tune check every day.
1 method blank every day.

Tier 3: 5-point initial calibration, daily check standard.
BFB tune check every day.
1 method blank per analytical batch.

Blind QC samples at a rate of no more than 10%.
Matrix spike and matrix spike duplicate for each analytical batch.
12-h clock for tune check and daily check standard.

11.2. All calibration criteria listed in the previous section must be met before analyzing samples.

11.3. **Method blank analysis.** A method blank is a volume of reagent water or a purified solid material which is taken through the entire analytical procedure. The weight or volume of the blank must approximate that of the samples being analyzed.

11.3.1. Under Tier Two and Tier Three QC requirements, blanks are analyzed at a frequency of one for every 20 samples of similar matrix or whenever samples are extracted by the same procedure, whichever is more frequent. The following criteria are checked immediately after blank analysis:

- The method blank should contain less than five times the practical quantitation limit (PQL) of phthalate esters in the target compound list.

- All other analytes present on the target compound list should not be present at concentrations greater than the PQL.

- Recovery of all surrogate compounds must be within specified limits (Table V). If this criterion is not met, reanalyze or reextract another blank to determine whether the incident is isolated or an out-of-control status exists.

TABLE V. BNA SURROGATE SPIKE RECOVERY LIMITS IN PERCENT

Surrogate Compound	Water	Soil
Nitrobenzene-d_5	35-114	23-120
2-Fluorobiphenyl	43-116	30-115
Terphenyl-d_{14}	33-141	18-137
Phenol-d_5	10-94	24-113
2-Fluorophenol	21-100	25-121
2,4,6-Tribromophenol	10-123	19-122

11.3. **Surrogate spike requirements.** Each sample prepared and analyzed for semivolatile compounds is fortified with known amounts of base-neutral and acid extractable compounds. By evaluating their recovery, measured as a percentage, the analyst can draw conclusions concerning the analytical efficiency on a sample-by-sample basis.

11.3.1. Surrogate spike recoveries are considered to be acceptable if they fall within the range specified in Table V.

The following conditions indicate unacceptable surrogate recovery: (1) recovery of any one surrogate in either the base-neutral or acid fraction is less than 10%, and (2) recoveries of any two surrogate compounds in either base-neutral or acid fraction are out of recovery limits.

11.3.2. When surrogate spike recoveries are determined to be out of control the analyst needs to determine if the cause is matrix- or process-dependent. Reextraction should be requested when there is sufficient sample and holding time can be met. Whichever conclusion is reached needs to be addressed in the case narrative and/or anomaly summary. Corrective action will be implemented to alleviate the causes of the out-of-control condition.

11.4. **Matrix spike and matrix spike duplicate recovery requirements.** In order to evaluate the matrix effect of a sample upon the analytical methodology employed, known concentrations of base/neutral and acid target compounds are added to duplicates of a given sample (Table VI). The sample chosen to be spiked should be representative of the samples from a given project.

TABLE VI. BNA MATRIX SPIKE COMPOUNDS

Compound	Fraction	Amount added (μg)
1,2,4-Trichlorobenzene	BN	50
Acenaphthene	BN	50
2,4-Dinitrotoluene	BN	50
Pyrene	BN	50
N-nitroso-di-n-propylamine	BN	50
1,4-Dichlorobenzene	BN	50
Pentachlorophenol	Acid	100
Phenol	Acid	100

TABLE VI. (cont)		
Compound	Fraction	Amount added (μg)
2-Chlorophenol	Acid	100
4-Chloro-3-methylphenol	Acid	100
4-Nitrophenol	Acid	100

11.4.1. Under Tier Three QC requirements, matrix spike and matrix spike duplicate data are generated for every twenty samples of a given matrix type prepared by the same method.

11.4.2. Matrix spike/matrix spike duplicates and the original unspiked sample must be concentrated to the same final volume and analyzed at the same dilution level. If high levels of target compounds are detected that are not matrix spike compounds, the original sample only needs to be diluted to enable compound quantitation.

11.4.3. Spike recovery is evaluated in terms of percent recovery and the relative percent difference (RPD) between individual spike compounds in the MS and MSD. This data can be used to evaluate the long term precision and accuracy of the method. See Table VII for spike recovery limits.

TABLE VII. BNA MATRIX SPIKE RECOVERY LIMITS - SOIL

Compound	Percent recovered			RPD
1,2,4-Trichlorobenzene	38	-	107	23
Acenaphthene	31	-	137	19
2,4-Dinitrotoluene	28	-	89	47
Pyrene	35	-	142	36
N-nitroso-di-n-propylamine	41	-	126	38
1,4-Dichlorobenzene	28	-	104	27
Pentachlorophenol	17	-	109	47

TABLE VII. (cont)				
Compound	Percent recovered			RPD
Phenol	26	-	90	35
2-Chlorophenol	25	-	102	50
4-Chloro-3-methylphenol	26	-	103	33
4-Nitrophenol	11	-	114	50

11.5. Under Tier Three QC requirements, blind spikes are regularly extracted and analyzed as an independent check of method accuracy. Standard reference materials should resemble submitted matrices as closely as possible.

11.6. **Sample analysis.** Samples must be analyzed within 40 d of sample extraction.

11.6.1. Internal standard response from each sample injection must agree by a factor of two (-50% to 200%) with the internal standard response from the most recent continuing calibration standard.

11.6.2. Sample internal standard retention times must not differ by more than 30 s from the continuing calibration standard.

11.6.3. Each analytical run is checked for detector saturation for each target compound positively identified.

11.6.4. All data is evaluated for correctness of dilution. When compounds are detected at concentrations greater than 160 ppm, the sample extracts are diluted and reanalyzed.

11.6.5. Discrete chromatographic peaks that are not identified as target compounds are treated as tentatively identified compounds (TICs). These compounds may be identified if the customer requests this service. A tentative identification is made by comparison of the unknown spectra with a mass-spectral database.

11.7. Qualitative analysis.

11.7.1. Target compounds detected in sample injections are positively identified on the basis of relative retention time (RRT) and mass spectral criteria. See Table VIII for a list of analytes and their corresponding characteristic ions.

11.7.1.1. The sample component's relative retention time must agree within ±0.06 RRT units of that component in the continuing calibration standard.

11.7.1.2. Qualitative verification requires the following conditions to be met:

- All ions present in the standard mass spectrum at a relative intensity >10% must be present in the sample spectrum.

- The relative intensities of ions specified above must agree within 20%.

- Ions present at relative intensities >10% in the sample spectrum but not present in the standard spectrum must be accounted for by generating extracted ion current profiles (EICPs) for the relevant ions.

- Compounds present in samples but determined not to be target compounds are treated as TICs. A maximum of 20 discrete compounds may be identified (at customer's discretion) through comparison of unknown spectra with a mass-spectral library database. TICs will be searched only when their relative ion concentration (RIC) area is greater than 10% of the nearest internal standard RIC area.

11.8. **Quantitative analysis.** When a target compound has been positively identified, quantitation is based on the EICP of the primary characteristic ion using the internal standard technique. The internal standard used will be the one nearest the retention time of the analyte.

11.8.1. The following calculations are used to quantify target analytes:

Low level soil/sludge/sediment/waste

$$\text{conc. of analyte (ng/g)} = \frac{A_x \times I_s \times V_t}{A_{is} \times R_f \times W_s \times V_s \times D} ,$$

where A_x = area of the characteristic ion for the analyte being measured,
I_s = amount of internal standard injected (ng),
V_t = volume of total extract taking into account any dilutions,

A_{is} = area of characteristic ion for the internal standard,
R_f = response factor for the compound being measured,
W_s = weight of sample extracted or diluted in grams, and
V_s = volume of extract injected (μL).

$$D = \frac{(100 - \%\ \text{moisture in sample})}{100},$$

where D = 1.0 if the data will be reported on a wet-weight basis.

11.8.2. Calculation of response factors (RF).

$$RF = \frac{(Ax)\ (Cis)}{(Ais)\ (Cx)},$$

where Ax = area of the characteristic ion for the analyte being measured,
Cis = concentration of the specific internal standard (40 ng/μL),
Ais = area of the characteristic ion of the specific internal standard, and
Cx = concentration of the compound being measured (ng/μL).

11.8.3. Percent moisture determination. When sample concentrations are to be reported on a dry weight basis, percent moisture is calculated using the following equation:

$$\%\ M = \frac{Sw - Sd}{Sw} \times 100,$$

where Sw = wet weight of the soil aliquot less the container weight, and
Sd = dry weight of the soil aliquot less the container weight after oven drying at 105°C for 24 h.

12. Reporting

Analytical results are reported using one of two target compound lists (TCLs) depending on the requirements of the submitter. The Appendix IX TCL list (ground water monitoring) includes the Hazardous Substance List (HSL) plus 43 additional analytes. Table IX lists HSL target compounds while Table X lists the Appendix IX target compounds. Compounds on the HSL list are routinely analyzed for and reported. Appendix IX compounds are not routinely analyzed.

13. Proper Waste Disposal Practices

13.1. General waste management.

13.1.1. Each analyst within the section shall be given Waste Generator Training by EM-8 within 90 days of date of hire.

13.1.2. Wherever possible, the generation of waste shall be minimized through reduction, reuse, or recycling. Wherever possible, containers should be segregated to reflect the nature of the hazardous waste and the eventual waste-disposal methods. For example, chlorinated solvent wastes should be segregated from flammable, non-chlorinated solvents and >50-ppm PCB-contaminated waste should be segregated from <50-ppm PCB contaminated waste. This is especially important in analysis areas where the waste generated is considered to be mixed waste.

13.1.3. Categorized the waste using a Waste Profile Form from EM-8.

13.1.4. Upon completion of a Waste Profile Form, the waste is disposed of by completing a Waste Disposal Request Form from EM-7. Approximately 30 days is required for the disposal of waste after the completion of the listed forms.

13.2. Solid waste.

13.2.1. Solid hazardous waste, such as contaminated paper towels, pipettes, spent syringes, and glass vials, is accumulated in a covered plastic container lined with a plastic bag. The container is labeled with a hazardous waste label identifying the hazard, the type of material being stored (i.e., pipettes, paper towels, etc.), the accumulation start date, and the laboratory of origin.

13.2.2. The waste container is opened only for the time necessary to add the waste.

13.3. Liquid waste.

13.3.1. Liquid wastes, such as spent samples and spent solvents that are not reuseable, are accumulated in glass or steel containers appropriate for the type of sample being stored. For example, caustic materials should be stored in glass containers whereas spent solvents that are not to be recycled should be stored in metal containers.

13.3.2. All containers storing hazardous liquid materials must be secondarily contained. The container is labeled with a hazardous waste label identifying the hazard, the type of material being stored (i.e., pipettes, paper towels, etc.), the accumulation start date, and the laboratory of origin.

13.3.3. The waste container is opened only for the time necessary to add the waste.

13.4. Unused samples.

13.4.1. Return unused environmental samples to the Sample Management section for disposal.

14. Source Materials

14.1. USEPA Contract Laboratory Program, Statement of Work for Organic Analysis Multi-media, Multi-Concentration, 2/88.

14.2. Test Methods for Evaluating Solid Waste Physical/Chemical Methods, SW-846, ed. 1988.

14.3. Sorbent Extraction Technology, K.C. Van Horne, Analytical International, Inc. 1985.

14.4. "Hazardous and Mixed Waste," Administrative Requirement 10-3, in *Environment, Safety, and Health Manual*, Los Alamos National Laboratory Manual, Chapter 1 (most recent edition).

TABLE VIII. CHARACTERISTICS IONS FOR SEMIVOLATILE COMPOUNDS

Compound	Retention time (min)	Primary ion	Secondary ion(s)
2-Picoline	3.75[a]	93	66, 92
Aniline	5.68	93	66, 65
Phenol	5.77	94	65, 66
Bis(2-chloroethyl) ether	5.82	93	63,95
2-Chlorophenol	5.97	128	64, 130
1,3-Dichlorobenzene	6.27	146	148, 111
1,4-Dichlorobenzene-d_4 (I.S.)	6.35	152	150, 115
1,4-Dichlorobenzene	6.40	146	148, 111
Benzyl alcohol	6.78	108	79, 77
1,2-Dichlorobenzene	6.85	146	148, 111
N-Nitrosomethylethylamine	6.97	88	42, 88, 43, 56
Bis(2-chloroisopropyl) ether	7.22	45	77, 121
Ethyl carbamate	7.27	62	62, 44, 45, 74
Thiophenol (benzenethiol)	7.42	110	110, 66, 109, 84
Methyl methanesulfonate	7.48	80	80, 79, 65, 95
N-Nitrosodi-n-propylamine	7.55	70	42, 101, 130
Hexachloroethane	7.65	117	201, 199
Maleic anhydride	7.65	54	54, 98, 53, 44
Nitrobenzene	7.87	77	123, 65
Isophorone	8.53	82	95, 138
N-Nitrosodiethylamine	8.70	102	102, 42, 57, 44, 56
2-Nitrophenol	8.75	139	109, 65
2,4-Dimethylphenol	9.03	122	107, 121
p-Benzoquinone	9.13	108	54, 108, 82, 80
Bis(2-chloroethoxy) methane	9.23	93	95, 123
Benzoic acid	9.38	122	105, 77
2,4-Dichlorophenol	9.48	162	164, 98

TABLE VIII. (cont)

Compound	Retention time (min)	Primary ion	Secondary ion(s)
Trimethyl phosphate	9.53	110	110, 79, 95, 109, 140
Ethyl methanesulfonate	9.62	79	79, 109, 97, 45, 65
1,2,4-Trichlorobenzene	9.67	180	182, 145
Naphthalene-d_8 (I.S.)	9.75	136	68
Naphthalene	9.82	128	129, 127
Hexachlorobutadiene	10.43	225	223, 227
Tetraethyl pyrophosphate	11.07	99	99, 155, 127, 81, 109
Diethyl sulfate	11.37	139	139, 45, 59, 99, 111, 125
4-Chloro-3-methylphenol	11.68	107	144, 142
2-Methylnaphthalene	11.87	142	141
2-Methylphenol	12.40	107	107, 108, 77, 79 90
Hexachloropropene	12.45	213	213, 211, 215, 117, 106, 141
Hexachlorocyclopentadiene	12.60	237	235, 272
N-Nitrosopyrrolidine	12.65	100	100, 41, 42, 68, 69
Acetophenone	12.67	105	71, 105, 51, 120
4-Methylphenol	12.82	107	107, 108, 77, 79 90
2,4,6-Trichlorophenol	12.85	196	198, 200
o-Toluidine	12.87	106	106, 107, 77, 51, 79
3-Methylphenol	12.93	107	107, 108, 77, 79, 90
2-Chloronaphthalene	13.30	162	127, 164
N-Nitrosopiperidine	13.55	114	42, 114, 55, 56,41
1,4-Phenylenediamine	13.62	108	108, 80, 53, 54, 52
1-Chloronaphthalene	13.65[a]	162	127, 164
2-Nitroaniline	13.75	65	92, 138
5-Chloro-2-methylaniline	14.28	106	106, 141, 140, 77, 89
Dimethyl phthalate	14.48	163	194, 164

TABLE VIII. (cont)

Compound	Retention time (min)	Primary ion	Secondary ion (s)
Acenaphthylene	14.57	152	151, 153
2,6-Dinitrotoluene	14.62	165	63, 89
Phthalic anhydride	14.62	104	104, 76, 50, 148
o-Anisidine	15.00	108	80, 108, 123, 52
3-Nitroaniline	15.02	138	108, 92
Acenaphthene-d_{10} (I.S.)	15.05	164	162, 160
Acenaphthene	15.13	154	153, 152
2,4-Dinitrophenol	15.35	184	63, 154
2,6-Dinitrophenol	15.47	162	162, 164, 126, 98, 63
4-Chloroaniline	15.50	127	127, 129, 65, 92
Isosafrole	15.60	162	162, 131, 104, 77, 51
Dibenzofuran	15.63	168	139
2,4-Diaminotoluene	15.78	121	121, 122, 94, 77, 104
2,4-Dinitrotoluene	15.80	165	63, 89
4-Nitrophenol	15.80	139	109, 65
2-Naphthylamine	16.00[a]	143	115, 116
1,4-Naphthoquinone	16.23	158	158, 104, 102, 76, 50, 130
p-Cresidine	16.45	122	122, 94, 137, 77, 93
Dichlorovos	16.48	109	109, 185, 79, 145
Diethyl phthalate	16.70	149	177, 150
Fluorene	16.70	166	165, 167
2,4,5-Trimethylaniline	16.70	120	120, 135, 134, 91, 77
N-Nitrosodibutylamine	16.73	84	84, 57, 41, 116, 158
4-Chlorophenyl phenyl ether	16.78	204	206, 141
Hydroquinone	16.93	110	110, 81, 53, 55
4,6-Dinitro-2-methylphenol	17.05	198	51, 105

TABLE VIII. (cont)

Compound	Retention time (min)	Primary ion	Secondary ion (s)
Resorcinol	17.13	110	110, 81, 82, 53, 69
N-Nitrosodiphenylamine	17.17	169	168, 167
Safrole	17.23	162	162, 162, 104, 77, 103, 135
Hexamethyl phosphoramide	17.33	135	135, 44, 179, 92, 42
3-(Choromethyl)pyridine hydrochloride	17.50	92	92, 127, 129, 65, 39
Diphenylamine	17.54[a]	169	168, 167
1,2,4,5-Tetrachlorobenzene	17.97	216	216, 214, 179, 108, 143, 218
1-Naphthylamine	18.20	143	143, 115, 89, 63
1-Acetyl-2-thiourea	18.22	118	43, 118, 42, 76
4-Bromophenyl phenyl ether	18.27	248	250, 141
Toluene diisocyanate	18.42	174	174, 145, 173, 146, 132, 91
2,4,5-Trichlorophenol	18.47	196	196, 198, 97, 132, 99
Hexachlorobenzene	18.65	284	142, 249
Nicotine	18.70	84	84, 133, 161, 162
Pentachlorophenol	19.25	266	264, 268
5-Nitro-2-methylaniline	19.27	152,	77, 152, 79, 106, 94
Thionazine	19.35	107	96, 107, 97, 143, 79, 68
4-Nitroaniline	19.37	138	138, 65, 108, 92, 80, 39
Phenanthrene-d_{10} (I.S.)	19.55	188	94, 80
Phenanthrene	19.62	178	179, 176
Anthracene	19.77	178	176, 179
1,4-Dinitrobenzene	19.83	168	168, 75, 50, 76, 92, 122
Mevinphos	19.90	127	127, 192, 109, 67, 164
Naled	20.03	109	109, 145, 147, 301, 79, 189
1,3-Dinitrobenzene	20.18	168	168, 76, 50, 75, 92, 122
Diallate (cis or trans)	20.57	86	86, 234, 43, 70

TABLE VIII. (cont)

Compound	Retention time (min)	Primary ion	Secondary ion (s)
1,2-Dinitrobenzene	20.58	168	168, 50, 63, 74
Diallate (trans or cis)	20.78	86	86, 234, 43, 70
Pentachlorobenzene	21.35	250	250, 252, 108, 248, 215, 254
5-Nitro-2-methoxyaniline	21.50	168	168, 79, 52, 138, 153, 77
Pentachloronitrobenzene	21.72	237	237, 142, 214, 249, 295, 265
4-Nitroquinoline-1-oxide	21.73	174	174, 101, 128, 75, 116
Di-n-butyl phthalate	21.78	149	150, 104
2,3,4,6-Tetrachlorophenol	21.88	232	232, 131, 230, 166, 234, 168
Demeton-o	22.72	88	88, 89, 60, 61, 115, 171
Fluoranthene	23.33	202	101, 203
1,3,5-Trinitrobenzene	23.68	75	75, 74, 213, 120, 91, 63
Dicrotophos	23.82	127	127, 67, 72, 109, 193, 237
Benzidine	23.87	184	92, 185
Trifluralin	23.88	306	306, 43, 264, 41, 290
Bromoxynil	23.90	277	277, 279, 88, 275, 168
Pyrene	24.02	202	200, 203
Monocrothophos	24.08	127	127, 192, 67, 97, 109
Phorate	24.10	75	75, 121, 97, 93, 260
Sulfallate	24.23	188	188, 88, 72, 60, 44
Demeton-s	24.30	88	88, 60, 81, 89, 114, 115
Phenacetin	24.33	108	180, 179, 109, 137, 80
Dimethoate	24.70	87	87, 93, 125, 143, 229
Phenobarbital	24.70	204	204, 117, 232, 146, 161
Carbofuran	24.90	164	164, 149, 131, 122
Octamethyl pyrophosphoramide	24.95	135	135, 44, 199, 286, 153, 243
4-Aminobiphenyl	25.08	169	169, 168, 170, 115
Terbufos	25.35	231	231, 57, 97, 153, 103

TABLE VIII. (cont)

Compound	Retention time (min)	Primary ion	Secondary ion (s)
Pronamide	25.48	173	173, 175, 145, 109, 147
Aminoazobenzene	25.72	197	92, 197, 120, 65, 77
Dichlone	25.77	191	191, 163, 226, 228, 135, 193
Dinoseb	25.83	211	211, 163, 147, 117, 240
Disulfoton	25.83	88	88, 97, 89, 142, 186
Fluchloralin	25.88	306	306, 63, 326, 328, 264, 65
Mexacarbate	26.02	165	165, 150, 134, 164, 222
4.4'-Oxydianiline	26.08	200	200, 108, 171, 80, 65
Butyl benzyl phthalate	26.43	149	91, 206
4-Nitrobiphenyl	26.55	199	199, 152, 141, 169, 151
Phosphamidon	26.85	127	127, 264, 72, 109, 138
2-Cyclohexyl-4,6-dinitrophenol	26.87	231	231, 185, 41, 193, 266
Methyl parathion	27.03	109	109, 125, 263, 79, 93
Carbaryl	27.17	144	144, 115, 116, 201
Dimethylaminoazobenzene	27.50	225	225, 120, 77, 105, 148, 42
Propylthiouracil	27.68	170	170, 142, 114, 83
Benz(a)anthracene	27.83	228	229, 226
Chrysene-d_{12} (I.S.)	27.88	240	120, 236
3,3'-Dichlorobenzidine	27.88	252	254, 126
Chrysene	27.97	228	226, 229
Malathion	28.08	173	173, 125, 127, 93, 158
Kepone	28.18	272	272, 274, 237, 178, 143, 270
Fenthion	28.37	278	278, 125, 109, 169, 153
Parathion	28.40	109	109, 97, 291, 139, 155
Anilazine	28.47	239	239, 241, 143, 178, 89

TABLE VIII. (cont)

Compound	Retention time (min)	Primary ion	Secondary ion (s)
Bis(2-ethylhexyl) phthalate	28.47	149	167, 279
3,3'-Dimethylbenzidine	28.55	212	212, 106, 196, 180
Carbophenothion	28.58	157	157, 97, 121, 342, 159, 199
5-Nitroacenaphthene	28.73	199	199, 152, 169, 141, 115
Methapyrilene	28.77	97	97, 50, 191, 71
Isodrin	28.95	193	193, 66, 195, 263, 265, 147
Captan	29.47	79	79, 149, 77, 119, 117
Chlorfenvinphos	29.53	267	267, 269, 323, 325 295
Crotoxyphos	29.73	127	127, 105, 193, 166
Phosmet	30.03	160	160, 77, 93, 317, 76
EPN	30.11	157	157, 169, 185, 141, 323
Tetrachlorvinphos	30.27	329	109, 329, 331, 79, 333
Di-n-octyl phthalate	30.48	149	167, 43
2-Aminoanthraquinone	30.63	223	223, 167, 195
Barban	30.83	222	222, 51, 87, 224, 257, 153
Aramite	30.92	185	185, 191, 319, 334, 197, 321
Benzo(b)fluoranthene	31.45	252	253, 125
Nitrofen	31.48	283	283, 285, 202, 139, 253
Benzo(k)fluoranthene	31.55	252	253, 125
Chlorobenzilate	31.77	251	251, 139, 253, 111, 141
Fensulfothion	31.87	293	293, 97, 308, 125, 292
Ethion	32.08	231	231, 97, 153, 125, 121
Diethylstilbestrol	32.15	268	268, 145, 107, 239, 121, 159
Famphur	32.67	218	218, 125, 93, 109, 217
Tri-p-tolyl phosphate[b]	32.75	368	368, 367, 107, 165, 198
Benzo(a)pyrene	32.80	252	253, 125
Perylene-d_{12} (I.S.)	33.05	264	260, 265

TABLE VIII. (cont)

Compound	Retention time (min)	Primary ion	Secondary ion (s)
7,12-Dimethylbenz(a)anthracene	33.25	256	256, 241, 239, 120
5,5-Diphenylhydantoin	33.40	180	180, 104, 252, 223, 209
Captafol	33.47	79	79, 77, 80, 107
Dinocap	33.47	69	69, 41, 39
Methoxychlor	33.55	227	227, 228, 152, 114, 274, 212
2-Acetylaminofluorene	33.58	181	181, 180, 223, 152
4,4'-Methylenebis-(2-chloroaniline)	34.38	231	231, 266, 268, 140, 195
3,3'-Dimethoxybenzidine	34.47	244	244, 201, 229
3-Methylcholanthrene	35.07	268	268, 252, 253, 126, 134, 113
Phosalone	35.23	182	182, 184, 367, 121, 379
Azinphos-methyl	35.25	160	160, 132, 93, 104, 105
Leptophos	35.28	171	171, 377, 375, 77, 155, 379
Mirex	35.43	272	272, 237, 274, 270 239, 235
Tris(2,3-dibromopropyl) phosphate	35.68	201	137, 201, 119, 217, 219, 199
Dibenz(a,j)acridine	36.40	279	279, 280, 277, 250
Mestranol	36.48	277	277, 310, 174, 147, 242
Coumaphos	37.08	362	362, 226, 210, 364, 97, 109
Indeno(1,2,3-cd)pyrene	39.52	276	138, 227
Dibenz(a,h)anthracene	39.82	278	139, 279
Benzo(g,h,i)perylene	41.43	276	138,277
1,2:4,5-Dibenzopyrene	41.60	302	302, 151, 150, 300
Strychnine	45.15	334	334, 335, 333
Piperonyl sulfoxide	46.43	162	162, 135, 105, 77
Hexachlorophene	47.98	196	196, 198, 209, 211, 406, 408

TABLE VIII. (cont)

Compound	Retention time (min)	Primary ion	Secondary ion (s)
Aldrin		66	263, 220
Aroclor-1016		222	260, 292
Aroclor-1221		190	224, 260
Aroclor-1232		190	224, 260
Aroclor-1242		222	256, 292
Aroclor-1248		292	362, 326
Aroclor-1254		292	362, 326
Aroclor-1260		360	362, 394
α-BHC		183	181, 109
β-BHC		181	183, 109
4,4'-DDD		235	237, 165
4,4'-DDE		246	248, 176
4,4'-DDT		235	237,165
Dieldrin		79	263, 279
1,2-Diphenylhydrazine		77	105, 182
Endosulfan I		195	339, 341
Endosulfan II		337	339, 341
Endosulfan sulfate		272	387, 422
Endrin		263	82, 81
Endrin aldehyde		67	345, 250
Endrin ketone		317	67, 319
2-Fluorobiphenyl (surr.)		172	171
2-Fluorophenol (surr.)		112	64
Heptachlor		100	272, 274
Heptachlor epoxide		353	355, 351

TABLE VIII. (cont)

Compound	Retention time (min)	Primary ion	Secondary ion (s)
Nitrobenzene-d_5 (surr.)		82	128, 54
N-Nitrosodimethylamine		42	74, 44
Phenol-d_6 (surr.)		99	42, 71
Terphenyl-d_{14} (surr.)		244	122, 212
2,4,6-Tribromophenol (surr.)		330	332, 141
Toxaphene		159	231, 233

I.S. = internal standard.
surr. = surrogate.
[a]Estimated retention times; this value depends substantially on the final chromatographic conditions.
[b]Substitute for the non-specific mixture, tricresyl phosphate.

TABLE IX. LIMIT OF QUANTITATION FOR HAZARDOUS SUBSTANCE LIST OF SEMIVOLATILE ORGANIC ANALYTES IN SOIL

Compound	CAS Number	LOQ mg/Kg
Acenaphthene	83-32-9	1.0
Acenaphthylene	208-96-2	1.0
Anthracene	120-12-7	1.0
Aniline	62-53-3	1.0 *
Azobenzene	103-33-3	1.0
Benzidine	92-87-5	1.0*,a
Benz(a)anthracene	56-55-3	1.0
Benzo(b)fluoranthene	205-99-2	1.0
Benzo(k)fluoranthene	207-88-9	1.0
Benzoic Acid	65-85-0	1.0 *,c
Benzo(g,h,i)perylene	191-24-2	1.0
Benzo(a)pyrene	50-32-8	1.0
Benzyl alcohol	100-51-6	1.0
Bis(2-chloroethoxy)methane	111-91-1	1.0
Bis(2-chloroethyl)ether	111-44-4	1.0
Bis(2-chloroisopropyl)ether	108-60-1	1.0
4-Bromophenyl phenyl ether	101-55-3	1.0
Butylbenzyl phthalate	85-68-7	1.0 *
4-Chloroaniline	106-47-8	1.0 *,c
4-Chloro-3-methylphenol	59-50-7	1.0
2-Chloroanaphthalene	91-58-7	1.0
2-Chlorophenol	95-57-8	1.0
4-Chlorophenyl phenyl ether	7005-72-3	1.0
Chrysene	218-01-9	1.0
Dibenz(a,h)anthracene	53-70-3	1.0
Dibenzofuran	132-64-9	1.0

TABLE IX. (cont)		
Compound	CAS Number	LOQ mg/Kg
Di-n-butylphthalate	84-74-2	1.0 *
1,2-Dichlorobenzene	95-50-1	1.0
1,3-Dichlorobenzene	541-73-1	1.0
1,4-Dichlorobenzene	106-46-7	1.0
3,3'-Dichlorobenzidine	91-94-1	1.0 *
2,4-Dichlorophenol	120-83-2	1.0
Diethylphthalate	84-66-2	1.0 *
2,4-Dimethylphenol	105-67-9	1.0 *,c
Dimethylphthalate	131-11-3	1.0 *
4,6-Dinitro-2-methylphenol	534-52-1	1.0
2,4-Dinitrophenol	51-28-5	1.0 *,c
2,4-Dinitrotoluene	121-14-2	1.0
2,6-Dinitrotoluene	606-20-2	1.0
Di-n-octyl phthalate	117-84-0	1.0
Bis(2-ehtylhexyl)phthalate	117-81-7	1.0
Fluoranthene	206-44-0	1.0
Fluorene	86-73-7	1.0
Hexachlorobenzene	118-74-1	1.0
Hexachlorobutadiene	87-68-3	1.0
Hexachlorocyclopentadiene	77-47-4	1.0*,d
Hexachloroethane	67-72-1	1.0
Indeno(1,2,3-cd)pyrene	193-39-5	1.0
Isophorone	78-59-1	1.0
2-Methylnaphthalene	91-57-6	1.0
2-Methylphenol	95-48-7	1.0 *,c
4-Methylphenol	6-44-5	1.0 *,c
Naphthalene	91-20-3	1.0
2-Nitroaniline	88-74-4	1.0

TABLE IX. (cont)

Compound	CAS Number	LOQ mg/Kg
3-Nitroaniline	99-09-2	1.0 *,c
4-Nitroaniline	100-01-6	1.0 *,c
Nitrobenzene	98-95-3	1.0
2-Nitrophenol	88-75-5	1.0
4-Nitrophenol	100-02-7	1.0 *,c
N-nitrosodimethylamine	62-75-9	1.0 *,c
N-nitrosodiphenylamine	86-30-6	1.0
N-Nitroso-di-n-propylamine	621-64-7	1.0 *
Pentachlorophenol	87-86-5	1.0 *,c
Phenanthrene	85-01-8	1.0
Phenol	108-95-2	1.0
Pyrene	129-00-0	1.0
1,2,4-Trichlorobenzene	120-82-1	1.0
2,4,5-Trichlorophenol	95-95-4	1.0
2,4,6-Trichlorophenol	88-06-2	1.0

* The limit of quantitation has not been verified for these analytes based upon a Method Detection Limit study. All other analytes averaged better than 70% recovery based upon seven repetitions. The amount of each analyte spiked was 1.0 μg into 1.0 L.

a Exhibits nonreproducible chromatography and oxidative loss during concentration.

c These analytes are subject to erratic chromatographic performance and/or thermal decomposition in the gas chromatograph inlet.

d Subject to thermal decomposition in the chromatographic inlet, chemical reaction with acetone in solution, and photochemical decomposition.

Limits of Quantitation (LOQ) will be two times greater for soil/sediment matrices which have been GPC cleaned.

TABLE X. APPENDIX IX TARGET COMPOUND LIST OF SEMIVOLATILE ORGANIC ANALYTES IN SOIL LIMIT OF QUANTITATION

Compound	CAS number	LOQ µg/Kg
Acenaphthene	83-32-9	1.0
Acenaphthylene	208-96-2	1.0
Acetophenone	98-86-2	ND
Anthracene	120-12-7	1.0
Aniline	62-53-3	1.0 *
Aramite	140-57-8	ND
Azobenzene	3-33-3	1.0
Benzidine	92-87-5	1.0 *,a
Benz(a)anthracene	56-55-3	1.0
Benzo(b)fluoranthene	205-99-2	1.0
Benzo(k)fluoranthene	207-88-9	1.0
Benzoic acid	65-85-0	1.0 *,c
Benzo(g,h,i)perylene	191-24-2	1.0
Benzo(a)pyrene	50-32-8	1.0
Benzyl alcohol	0-51-6	1.0
Bis(2-chloroethoxy)methane	111-91-1	1.0
Bis(2-chloroethyl) ether	111-44-4	1.0
Bis(2-chloroisopropyl) ether	108-60-1	1.0
4-Bromophenyl phenyl ether	101-55-3	1.0
Butyl benzyl phthalate	85-68-7	1.0 *
4-Chloroaniline	106-47-8	1.0 *,c
Chlorobenzilate	510-15-6	ND
4-Chloro-3-methylphenol	59-50-7	1.0

TABLE X. (cont)

Compound	CAS number	LOQ µg/Kg
2-Chloroanaphthalene	91-58-7	1.0
2-Chlorophenol	95-57-8	1.0
4-Chlorophenyl phenyl ether	7005-72-3	1.0
Chrysene	218-01-9	1.0
Diallate	2303-16-4	ND
Dibenz(a,h)anthracene	53-70-3	1.0
Dibenzofuran	132-64-9	1.0
Di-n-butyl phthalate	84-74-2	1.0 *
1,2-Dichlorobenzene	95-50-1	1.0
1,3-Dichlorobenzene	541-73-1	1.0
1,4-Dichorobenzene	6-46-7	1.0
3,3'-Dichlorobenzidine	91-94-1	1.0 *
2,4-Dichlorophenol	120-83-2	1.0
Diethyl phthalate	84-66-2	1.0 *
Dimethoate	60-51-5	ND
7,12-Dimethylbenz(a)-anthracene	57-97-6	ND
2,4-Dimethylphenol	5-67-9	1.0 *,c
Dimethyl phthalate	131-11-3	1.0 *
4,6-Dinitro-2-methylphenol	534-52-1	1.0
2,4-Dinitrophenol	51-28-5	1.0 *,c
2,4-Dinitrotoluene	121-14-2	1.0
2,6-Dinitrotoluene	606-20-2	1.0
Di-n-octyl phthalate	117-84-0	1.0
Diphenylamine	122-39-4	ND
Dinoseb (DNBP)	88-85-7	ND

TABLE X. (cont)

Compound	CAS number	LOQ µg/Kg
Disulfoton	298-04-4	ND
Bis(2-ethylhexyl) phthalate	117-81-7	1.0
Ethyl methacrylate	97-63-2	ND
Ethyl methanesulfonate	62-50-0	ND
Famphur	52-85-7	ND
Fluoranthene	206-44-0	1.0
Fluorene	86-73-7	1.0
Hexachlorobenzene	118-74-1	1.0
Hexachlorobutadiene	87-68-3	1.0
Hexachlorocyclopentadiene	77-47-4	1.0*,d
Hexachloroethane	67-72-1	1.0
Hexachlorophene	70-30-4	ND
Hexachloropropene	1888-71-7	ND
Indeno(1,2,3-cd)pyrene	193-39-5	1.0
Isodrin	465-73-6	ND
Isosafrole	120-58-1	ND
Isophorone	78-59-1	1.0
Kepone	143-50-0	ND
3-Methylcholanthrene	56-49-5	ND
2-Methylnaphthalene	91-57-6	1.0
2-Methylphenol	95-48-7	1.0 *,c
4-Methylphenol	106-44-5	1.0 *,c
Methapyrilene hydrochloride	91-80-5	ND
Methyl methacrylate	80-62-6	ND
Methyl methanesulfonate	66-27-3	ND
Methyl Parathion	296-00-0	ND
Naphthalene	91-20-3	1.0
2-Nitroaniline	88-74-4	1.0

TABLE X. (cont)

Compound	CAS number	LOQ µg/kg
3-Nitroaniline	99-09-2	1.0 *,c
4-Nitroaniline	0-01-6	1.0 *,c
Nitrobenzene	98-95-3	1.0
2-Nitrophenol	88-75-5	1.0
4-Nitrophenol	100-02-7	1.0 *,c
4-Nitroquinoline-1-oxide	56-57-5	ND
5-Nitro-2-methylaniline	99-55-8	ND
N-Nitrosodiethylamine	55-18-5	ND
N-Nitrosomethylethylamine	10595-95-6	ND
N-Nitroso-di-n-butylamine	924-16-3	ND
N-Nitrosodimethylamine	62-75-9	1.0 *,c
N-Nitrosodiphenylamine	86-30-6	1.0
N-Nitroso-di-n-propylamine	621-64-7	1.0 *
o-Toluidine	95-53-4	ND
Parathion	56-38-2	ND
Pentachloroethane	76-01-7	ND
Pentachloronitrobenzene	82-68-8	ND
Pentachlorophenol	87-86-5	1.0 *,c
Phenacetin	62-44-2	ND
Phenanthrene	85-01-8	1.0
Phenol	8-95-2	1.0
Phorate	298-02-2	ND
2-Picoline	109-06-8	ND
Pronamide	23950-58-5	ND
Pyridine	110-86-1	ND
Pyrene	129-00-0	1.0

TABLE X. (cont)

Compound	CAS number	LOQ µg/Kg
Safrole	94-59-7	ND
2,3,4,6-Tetrachlorophenol	58-90-2	ND
1,2,4-Trichlorobenzene	120-82-1	1.0
2,4,5-Trichlorophenol	95-95-4	1.0
O,O,O-Triethyl phosphorate	126-68-1	ND
2,4,6-Trichlorophenol	88-06-2	1.0
sym-Trinitrobenzene	99-35-4	ND
Tetraethyl dithiophosphate	3689-24-5	ND

* = The limit of quantitation has not been verified for these analytes based upon a Method Detection Limit study. All others averaged better than 70% analyte recovery based upon seven repetitions. The amount of each analyte spiked was 1.0 µg into 1.0 L.

a = Exhibits nonreproducible chromatography and oxidative loss during concentration.

c = These analytes are subject to erratic chromatographic performance and/or thermal decomposition in the gas chromatograph inlet.

d = Subject to thermal decomposition in the chromatographic inlet, chemical reaction with acetone in solution, and photochemical decomposition.

ND = not determined for these analytes.

Limits of Quantitation (LOQ) will be two times greater for soil/sediment matrices which have been GPC cleaned.

EXTRACTION OF SEMIVOLATILE ORGANIC ANALYTES IN SOLID MATRICES BY GC/MS MOBILE LABORATORY METHOD

Analytes: Base Neutral/Acid Extractables (BNAs)	**Method No.:** MLO510
Matrix: Soil, sediment, and sludges	**Minimum Detection Limit:** 1.0 - 2.0 μg/mg nominal (matrix-dependent)
Procedure: Extraction of analytes in the field using appropriate solvents and rotary table agitation. Analysis is by a field screening GC/MS method.	**Accuracy and Precision:** These parameters are analyte-dependent and are greatly influenced by the matrix.
Effective Date: 04/03/93	**Authors:** Martin W. Koby Matthew Monagle

SAFETY NOTE: Before beginning this procedure, read all of the Material Safety Data Sheets for the chemicals listed in Sec. 5. Read Sec. 4.3 of the EM-9 Safety Manual for information on personal protective clothing and equipment. Read Sec. 13 of this procedure and Source Material 14.4 for proper waste disposal practices.

1. Principle of Method

1.1. Depending on the analysis required, semivolatile constituents are extracted from various solid matrices using a rotary action shaker table. Extracts are then concentrated to a small volume (typically 0.5 mL or less) and analyzed by gas chromatography/mass spectrometry.

Analytes from a wide variety of compound classes can be determined using this method. Table IV lists the compounds in the current Hazardous Substance List which are analyzed routinely. Table V contains the Appendix IX list of compounds that are not routinely analyzed. (Tables IV and V are found at the end of this procedure.)

2. Sensitivity

2.1. Practical limits of quantitation are generally in the range of 1.0 mg/kg to 2.0 mg/kg for low-level solid matrices. Matrices which are relatively free of interferences have lower attainable limits of detection than those having large amounts of coextractable material, such as drum waste. Medium-level extracts have a nominal detection limit of 20,000 μg/kg.

2.2. Factors affecting sensitivity include the response factor of the compound being measured, the final volume of extract, the sample aliquot extracted, and the level of coextracted material.

3. Accuracy and Precision

3.1. Based upon fixed-based laboratory surrogate and spike data, analyte recoveries are typically in the 60-110% range. Recoveries can be expected to vary depending on the given analyte and matrix complexity.

3.2. Long-range precision data is currently based upon fixed-base laboratory matrix spike and spike duplicate percent recovery and the relative percent difference between the two. Refer to Section 11, Table III.

4. Interferences

4.1. Any material which will cause an increase in background signal or elevated baseline or result in discrete chromatographic peaks which are not attributable to target compounds may interfere with the identification and quantitation of a given analyte. Examples are environmental matrices containing high concentrations of humic material, oils, hydrocarbons, lipids, sulfur, or polar materials such as alcohols and carboxylic acids.

4.2. Excessive particulate matter in water, extreme alkalinity or acidity, reactive material, intense light, and high temperature can negatively effect analyte recovery.

5. Sample Collection and Storage

5.1. All sampling equipment should be free of introduced contaminants.

5.2. Soil or sediment samples are typically collected in amber or clear glass wide-mouth bottles. Caps should have Teflon liners; however, aluminum foil can be substituted for Teflon if necessary. Excessive headspace should be avoided.

5.3. Samples should be stored, unpreserved, in a refrigerator at 4°C until extraction is initiated.

6. Sample holding times

6.1. Soil or sediment samples must be extracted within 14 d of receipt.

6.2. Sample extracts must be analyzed within 40 d of extraction.

7. Apparatus

7.1. Electronic balance: capable of measurement to three decimal places.

7.2. Nitrogen evaporation apparatus with multiple sample capacity: Organomation N-EVAP, Model 111 or equivalent.

7.3. Beakers: glass, 100-, 150-, 250-, 400-, and 600-mL capacity.

7.4. Glass vials: 1.8-mL crimp cap, 1.8-, 7-, 10-, 12-, 15-, and 40-mL capacity screw cap with septa.

7.5. Volumetric flasks: 1-, 2-, 5-, 10-, 25-, 50-, 100-, and 250-mL with stoppers.

7.6. Disposable glass pipettes: 1-, 2-, 5-, and 10-mL.

7.7. Adjustable low-volume pipettors: 10- and 250-μL capacity with disposable capillary tips. SMI brand or equivalent.

7.8. Syringes: glass, gas-tight, 10-, 25-, 50-, and 100-μL volume.

7.9. Aluminum foil.

8. Reagents

8.1. Methylene chloride (Baker Resi-analyzed).

8.2. Acetone (Baker Resi-analyzed).

8.3. Methanol (HPLC-grade).

8.4. Hexane (pesticide-grade).

8.5. Reagent water (deionized). Charcoal filtered and/or distilled water demonstrated to be free from interferences.

8.6. Sodium sulfate (granular). Muffle overnight at 400°C. Alternatively, it can be Soxhlet-extracted with methylene chloride before use. Store in a covered container.

9. Analytical Standards

9.1. All analytical standards are refrigerated at -20°C. Working standards typically have a shelf life of three months. Stock standards are considered usable for at least six months or until degradation becomes apparent.

The following analytical standards are specified by EPA protocol to be used in the analysis of base/neutral acid extractables. They are readily available from any number of chemical suppliers as neat standards or as stock solutions. Currently, we use standard mixes formulated by Ultra Scientific, Inc.

9.2. **Surrogate compounds.** The surrogates closely resemble target compounds chemically but are not normally encountered in nature. Before extraction, each sample is fortified with a known concentration of surrogate mix. Evaluating surrogate recoveries give a measure of the method's efficiency for any given matrix.

9.2.1. Base/Neutral Surrogate Standard Mix (1000 μg/mL in CH_2Cl_2). This formulation contains the following compounds:

Nitrobenzene-d_5
2-Fluorobiphenyl
Terphenyl-d_{14}

9.2.2. Acid Surrogate Standard Mix (2000 μg/mL in methanol). This formulation contains the following compounds:

2-Fluorophenol
Phenol-d_5
2,4,6-Tribromophenol

9.2.3. BNA surrogate working standards are prepared by diluting each mix 1:20 with methanol in the same volumetric flask. This results in a final concentration of 50 or 100 ppm of base neutral/acid components, respectively.

9.3. **Matrix spike compounds.** These compounds (see Table I) are used to document analytical precision and accuracy, the objective being to identify both long-term and short-term trends in method performance. Known concentrations of spike material are added, to duplicate representative samples before extraction. Under Tier Three QC requirements, matrix spike and matrix spike duplicate data are generated once for every 20 samples analyzed.

TABLE I. BNA MATRIX SPIKE COMPOUNDS

Compound	Fraction	Amount added (μg)
1,2,4-Trichlorobenzene	BN	50
Acenaphthene	BN	50
2,4-Dinitrotoluene	BN	50
Pyrene	BN	50
N-nitroso-Di-n-propylamine	BN	50
1,4-Dichlorobenzene	BN	50
Pentachlorophenol	Acid	100

TABLE I. BNA MATRIX SPIKE COMPOUNDS (cont)		
Compound	Fraction	Amount added (μg)
Phenol	Acid	100
2-Chlorophenol	Acid	100
4-Chloro-3-methylphenol	Acid	100
4-Nitrophenol	Acid	100

9.3.1. Base/neutral matrix spike solution (1000 μg/mL in CH_2Cl_2). This formulation contains the following components:

Acenaphthene
1,4-Dichlorobenzene
2,4-Dinitrophenol
N-Nitroso-di-n-propylamine
Pyrene
1,2,4-Trichlorobenzene

9.3.2. Acid matrix spike solution (2000 μg/mL in methanol). This formulation contains the following components:

4-Chloro-3-methylphenol
2-Chlorophenol
4-Nitrophenol
Pentachlorophenol
Phenol

9.3.3. Working standards of matrix spiking solutions are made by diluting each stock 1:20 with methanol in the same volumetric flask. Final concentrations are 50/100 ppm base neutral/acid respectively.

10. Sample Extraction

10.1. Extracting low-level BNAs from soils, sediments, and other solid matrices using the rotary action table shaker.

10.1.1. Rinse all glassware with methylene chloride and air dry before use.

10.1.2. If any standing water is present in the sample container, decant it before homogenizing the sample. If the quantity of water is sufficient it may be treated as a separate sample, depending on the needs of the customer.

10.1.3. Avoiding rocks >2-mm-diam, grass, twigs, and other interfering material, weigh 10.0 g of homogenized sample into a 40-mL VOA vial. Record the sample weight in the benchsheet. Add about 10.0 g of granular sodium sulfate and mix thoroughly with a stainless-steel spatula. If the sample has significant moisture, additional Na_2SO_4 should be added. The sample should flow readily and have a grainy texture when sufficient sodium sulfate has been added.

10.1.4. If the sample has an oily appearance or strong organic/petroleum odor, extract a reduced aliquot. This will result in higher reported limits of quantitation.

10.1.5. If the analyte concentrations are to be reported on a dry-weight basis, determine the percent moisture. Tare an aluminum weigh boat or pan, add approximately 10 g of moist soil, and dry overnight at 105°C. Reweigh the samples and calculate the percent moisture from the weight loss on drying.

10.1.6. Add 1.0 mL of BNA surrogate standard mix directly to the surface of all samples, blanks, and matrix spikes. Similarly add 1.0 mL of BNA spike mix to the matrix spike and matrix spike duplicate samples.

10.1.7. Add exactly 10 mL of CH_2Cl_2 to the sample. Cap the vial and secure it to the sample shaker. Shake the vial vigorously for 30 min to thoroughly mix the sample and the solvent.

10.1.8. Pipette exactly 5 mL of the extract into an volumetric flask. Direct a gentle stream of dry nitrogen over the surface of the solvent. Periodically rinse the inside walls of the receiver tube with methylene chloride to prevent loss of analyte. Allow the extract to dry to an apparent volume of 0.5 mL, then remove from the bath. Occasionally an extract will not evaporate below 5.0 mL. In these instances the extract should be maintained at 5.0 mL and analyzed by GC/MS.

If the sample is to be analyzed for PCBs, pesticides, and semivolatile constituents, another 1-mL aliquot should be placed into a volumetric flask for solvent exchange. This extract is solvent-exchanged to hexane or iso-octane and analyzed for organochlorine pesticides and PCBs by GC/ECD.

11. Quality Assurance and Data Interpretation Requirements

11.1. The Quality Control (QC) requirements are defined in a tiered structure as follows:

Tier 1: 1-point calibration every day.
1 method blank every day.

Tier 2: 3-point initial calibration, daily check standard.
BFB tune check every day.
1 method blank every day.

Tier 3: 5-point initial calibration, daily check standard.
BFB tune check every day.
1 method blank per analytical batch.
Blind QC samples at a rate of no more than 10%.
Matrix spike and matrix spike duplicate for each analytical batch.
12-h clock for tune check and daily check standard.

11.2. A method blank is a volume of reagent water or a purified solid material which is taken through the entire analytical scheme. The weight or volume of the blank must approximate that of the samples being analyzed.

11.3. Under Tier 2 and Tier 3 QC requirements, blanks are analyzed at a frequency of one for every 20 samples of similar matrix, or whenever samples are extracted by the same procedure, whichever is more frequent. The following criteria are checked immediately after blank analysis:

- The method blank should contain less than five times the practical quantitation limit (PQL) of phthalate esters in the target compound list.

- All other analytes on the target compound list should not be present at concentrations greater than the PQL.

- Recovery of all surrogate compounds must be within specified limits (see Table II). If this criterion is not met, reanalyze or reextract another blank to determine whether the incident is isolated or an out-of-control status exists.

TABLE II. BNA SURROGATE SPIKE RECOVERY LIMITS IN PERCENT		
Surrogate Compound	Water	Soil
Nitrobenzene-d_5	35-114	23-120
2-Fluorobiphenyl	43-116	30-115
Terphenyl-d_{14}	33-141	18-137
Phenol-d_5	10-94	24-113
2-Fluorophenol	21-100	25-121
2,4,6-Tribromophenol	10-123	19-122

11.4. **Surrogate spike requirements**. Each sample which is prepared and analyzed for semivolatile compounds is fortified with known amounts of base-neutral and acid extractable compounds. Evaluating their recovery, measured as a percentage, allows conclusions to be derived concerning the analytical efficiency on a sample-by-sample basis.

11.4.1. Surrogate spike recoveries are considered to be acceptable if they fall within the ranges specified in Table II.

The following conditions indicate unacceptable surrogate recovery:

- Recovery of any one surrogate in either the base-neutral or acid fraction is less than 10%.

- Recoveries of any two surrogate compounds in either base-neutral or acid fraction are out of recovery limits.

11.4.2. When surrogate spike recoveries are determined to be out of control, the analyst needs to determine if the cause is matrix- or process-dependent. Re-extraction should be requested when there is sufficient sample and holding times can be met. Whichever conclusion is reached needs to be addressed in the case narrative and/or anomaly summary. Corrective action will be implemented to alleviate the causes of the out-of-control condition.

11.5. Matrix spike and matrix spike duplicate recovery requirements. In order to evaluate the matrix effect of a sample on the analytical methodology employed, known concentrations of base/neutral and acid target compounds are added to duplicates of a given sample. See Table III for a list of spike compounds. The sample chosen to be spiked should be representative of the samples from a given project.

11.5.1. Under Tier Three QC requirements, matrix spike and matrix spike duplicate data are generated for every 20 samples of a given matrix type prepared by the same method.

11.5.2. Matrix spike/matrix spike duplicates and the original unspiked sample must be concentrated to the same final volume and analyzed at the same dilution level. If high levels of target compounds are detected that are not matrix spike compounds, the original sample only needs to be diluted to enable compound quantitation.

11.5.3. Spike recovery is evaluated in terms of percent recovery and the relative percent difference (RPD) between individual spike compounds in the MS and MSD. This data can be used to evaluate the long-term precision and accuracy of the method. See Table III for spike recovery limits.

TABLE III. BNA MATRIX SPIKE RECOVERY LIMITS - SOIL

Compound	Percent recovered			RPD
1,24-Trichlorobenzene	38	-	107	23
Acenaphthene	31	-	137	19
2,4-Dinitrotoluene	28	-	89	47
Pyrene	35	-	142	36
N-nitroso-Di-n-propylamine	41	-	126	38
1,4-Dichlorobenzene	28	-	104	27
Pentachlorophenol	17	-	109	47
Phenol	26	-	90	35
2-Chlorophenol	25	-	102	50
4-Chloro-3-methylphenol	26	-	103	33
4-Nitrophenol	11	-	114	50

11.6. Under Tier Three QC requirements, blind spikes are extracted and analyzed on a regular basis as an independent check of method accuracy. Standard reference materials resemble submitted matrices as closely as possible.

11.7. Percent moisture determination. When sample concentrations are to be reported on a dry weight basis, percent moisture is calculated using the following equation:

$$\% M = \frac{Sw - Sd}{Sw} \times 100 ,$$

where SW = wet weight of the soil aliquot less the container weight, and
Sd = dry weight of the soil aliquot after oven drying at 105°C for 24 h less the container weight.

12. Reporting

Extraction data are recorded in a bound extraction benchsheet notebook. Nonroutine amendments to the procedure are also documented in this notebook in the amendments section at the back of the notebook.

13. Proper Waste Disposal Practices

13.1. General waste management.

13.1.1. Each analyst within the section shall be given Waste Generator Training from EM-8 within 90 days of the date of hire.

13.1.2. Wherever possible, minimize the generation of waste through reduction, reuse, or recycling. Wherever possible, segregate containers to reflect the nature of the hazardous waste and the eventual waste disposal methods. For example, chlorinated solvent wastes should be segregated from flammable, nonchlorinated solvents and >50-ppm PCB-contaminated waste should be segregated from <50-ppm PCB-contaminated waste. This is especially important in analysis areas where the waste generated is considered to be mixed waste.

13.1.3. Categorize the waste using an EM-8 Waste Profile Form.

13.1.4. Upon completion of the Waste Profile Form, dispose of the waste by completing a Waste Disposal Request Form from EM-7. Approximately 30 days is required for the disposal of waste after the completion of the listed forms.

13.2. Solid waste.

13.2.1. Accumulate hazardous wastes such as contaminated paper towels, pipettes, spent syringes, and glass vials in a covered plastic container lined with a plastic bag. Label the container with a hazardous waste label which identifies the hazard, type of material being stored (i.e., pipettes, paper towels, etc.), the accumulation start date, and the laboratory of origin.

13.2.2. Open the waste container only for the time necessary to add the waste.

13.3. Liquid waste.

13.3.1. Accumulate liquid waste, such as spent samples and spent solvents that are not reusable, in glass or steel containers appropriate for the type of sample being stored. For example, store caustic materials in glass containers and spent solvents that are not bound for recycling in metal containers.

13.3.2. Place all containers storing hazardous liquid materials within secondary containment. Label the container with a hazardous waste label which identifies the hazard, type of material being stored (i.e., pipettes, paper towels, etc.), the accumulation start date, and the laboratory of origin.

13.3.3. Open the waste container only for the time necessary to add the waste.

13.4. Unused samples.

13.4.1. Return unused environmental samples to the Sample Management section for disposal.

14. Source Materials

14.1. USEPA Contract Laboratory Program, Statement of Work for Organic Analysis Multi-media, Multi-Concentration, 2/88.

14.2. Test Methods for Evaluating Solid Waste, Physical/Chemical Methods, SW-846, 3rd ed., 1988.

14.3. Sorbent Extraction Technology, K.C. Van Horne, Analytical International, Inc. 1985.

14.4. "Hazardous and Mixed Waste," Adminisrative Requirement 10-3, in *Environment, Safety, and Health Manual*, Chapter 1 of Los Alamos National Lboratory Manual (most recent editon).

TABLE IV. HAZARDOUS SUBSTANCE LIST OF SEMIVOLATILE ORGANIC ANALYTES LIMIT OF QUANTITATION

Compound	CAS number	LOQ mg/kg
Acenaphthene	83-32-9	1.0
Acenaphthylene	208-96-2	1.0
Anthracene	120-12-7	1.0
Aniline	62-53-3	1.0 *
Azobenzene	3-33-3	1.0
Benzidine	92-87-5	1.0 *,a
Benz(a)anthracene	56-55-3	1.0
Benzo(b)fluoranthene	205-99-2	1.0
Benzo(k)fluoranthene	207-88-9	1.0
Benzoic acid	65-85-0	1.0 *,c
Benzo(g,h,i)perylene	191-24-2	1.0
Benzo(a)pyrene	50-32-8	1.0
Benzyl alcohol	0-51-6	1.0
Bis(2-chloroethoxy)methane	111-91-1	1.0
Bis(2-chloroethyl) ether	111-44-4	1.0
Bis(2-chloroisopropyl) ether	8-60-1	1.0
4-Bromophenyl phenyl ether	1-55-3	1.0
Butyl benzyl phthalate	85-68-7	1.0 *
4-Chloroaniline	6-47-8	1.0 *,c
4-Chloro-3-methylphenol	59-50-7	1.0
2-Chloroanaphthalene	91-58-7	1.0
2-Chlorophenol	95-57-8	1.0
4-Chlorophenyl phenyl ether	7005-72-3	1.0
Chrysene	218-01-9	1.0
Dibenz(a,h)anthracene	53-70-3	1.0
Dibenzofuran	132-64-9	1.0

TABLE IV. (cont)		
Compound	CAS number	LOQ mg/kg
Di-n-butylphthalate	84-74-2	1.0 *
1,2-Dichlorobenzene	95-50-1	1.0
1,3-Dichlorobenzene	541-73-1	1.0
1,4-Dichlorobenzene	6-46-7	1.0
3,3'-Dichlorobenzidine	91-94-1	1.0 *
2,4-Dichlorophenol	120-83-2	1.0
Diethyl phthalate	84-66-2	1.0 *
2,4-Dimethylphenol	5-67-9	1.0 *,c
Dimethyl phthalate	131-11-3	1.0 *
4,6-Dinitro-2-methylphenol	534-52-1	1.0
2,4-Dinitrophenol	51-28-5	1.0 *,c
2,4-Dinitrotoluene	121-14-2	1.0
2,6-Dinitrotoluene	606-20-2	1.0
Di-n-octyl phthalate	117-84-0	1.0
Bis(2-ethylhexyl) phthalate	117-81-7	1.0
Fluoranthene	206-44-0	1.0
Fluorene	86-73-7	1.0
Hexachlorobenzene	118-74-1	1.0
Hexachlorobutadiene	87-68-3	1.0
Hexachlorocyclopentadiene	77-47-4	1.0*,d
Hexachloroethane	67-72-1	1.0
Indeno(1,2,3-cd)pyrene	193-39-5	1.0
Isophorone	78-59-1	1.0
2-Methylnaphthalene	91-57-6	1.0
2-Methylphenol	95-48-7	1.0 *,c
4-Methylphenol	6-44-5	1.0 *,c
Naphthalene	91-20-3	1.0
2-Nitroaniline	88-74-4	1.0

TABLE IV. (cont)

Compound	CAS number	LOQ mg/kg
3-Nitroaniline	99-09-2	1.0 *,c
4-Nitroaniline	0-01-6	1.0 *,c
Nitrobenzene	98-95-3	1.0
2-Nitrophenol	88-75-5	1.0
4-Nitrophenol	0-02-7	1.0 *,c
N-nitrosodimethylamine	62-75-9	1.0 *,c
N-nitrosodiphenylamine	86-30-6	1.0
N-Nitroso-di-n-propylamine	621-64-7	1.0 *
Pentachlorophenol	87-86-5	1.0 *,c
Phenanthrene	85-01-8	1.0
Phenol	8-95-2	1.0
Pyrene	129-00-0	1.0
1,2,4-Trichlorobenzene	120-82-1	1.0
2,4,5-Trichlorophenol	95-95-4	1.0
2,4,6-Trichlorophenol	88-06-2	1.0

* = The limit of quantitation has not been verified for these analytes based upon a Method Detection Limit study. All others averaged better than 70% analyte recovery based upon seven repetitions. The amount of each analyte spiked was 330 μg into 1.0 L.

a = Exhibits nonreproducible chromatography and oxidative loss during concentration.

c = These analytes are subject to erratic chromatographic performance and/or thermal decomposition in the gas chromatograph inlet.

d = Subject to thermal decomposition in the chromatographic inlet, chemical reaction with acetone in solution, and photochemical decomposition.

Limits of quantitation (LOQ) will be two times greater for soil/sediment matrices which have been GPC cleaned.

TABLE V. APPENDIX IX TARGET COMPOUND LIST OF SEMIVOLATILE ORGANIC ANALYTES LIMIT OF QUANTITATION

Compound	CAS number	LOQ mg/kg
Acenaphthene	83-32-9	1.0
Acenaphthylene	208-96-2	1.0
Acetophenone	98-86-2	ND
Anthracene	120-12-7	1.0
Aniline	62-53-3	1.0 *
Aramite	140-57-8	ND
Azobenzene	3-33-3	1.0
Benzidine	92-87-5	1.0 *,a
Benz(a)anthracene	56-55-3	1.0
Benzo(b)fluoranthene	205-99-2	1.0
Benzo(k)fluoranthene	207-88-9	1.0
Benzoic acid	65-85-0	1.0 *,c
Benzo(g,h,i)perylene	191-24-2	1.0
Benzo(a)pyrene	50-32-8	1.0
Benzyl alcohol	0-51-6	1.0
Bis(2-chloroethoxy)methane	111-91-1	1.0
Bis(2-chloroethyl) ether	111-44-4	1.0
Bis(2-chloroisopropyl) ether	108-60-1	1.0
4-Bromophenyl phenyl ether	101-55-3	1.0
Butyl benzyl phthalate	85-68-7	1.0 *
4-Chloroaniline	106-47-8	1.0 *,c
Chlorobenzilate	510-15-6	ND
4-Chloro-3-methylphenol	59-50-7	1.0
2-Chloroanaphthalene	91-58-7	1.0
2-Chlorophenol	95-57-8	1.0
4-Chlorophenyl phenyl ether	7005-72-3	1.0

TABLE V. (cont)

Compound	CAS number	LOQ mg/kg
Chrysene	218-01-9	1.0
Diallate	2303-16-4	ND
Dibenz(a,h)anthracene	53-70-3	1.0
Dibenzofuran	132-64-9	1.0
Di-n-butyl phthalate	84-74-2	1.0 *
1,2-Dichlorobenzene	95-50-1	1.0
1,3-Dichlorobenzene	541-73-1	1.0
1,4-Dichorobenzene	6-46-7	1.0
3,3'-Dichlorobenzidine	91-94-1	1.0 *
2,4-Dichlorophenol	120-83-2	1.0
Diethyl phthalate	84-66-2	1.0 *
Dimethoate	60-51-5	ND
7,12-Dimethylbenz(a)-anthracene	57-97-6	ND
2,4-Dimethylphenol	5-67-9	1.0 *,c
Dimethyl phthalate	131-11-3	1.0 *
4,6-Dinitro-2-methylphenol	534-52-1	1.0
2,4-Dinitrophenol	51-28-5	1.0 *,c
2,4-Dinitrotoluene	121-14-2	1.0
2,6-Dinitrotoluene	606-20-2	1.0
Di-n-octyl phthalate	117-84-0	1.0
Diphenylamine	122-39-4	ND
Dinoseb (DNBP)	88-85-7	ND
Disulfoton	298-04-4	ND
Bis(2-ethylhexyl) phthalate	117-81-7	1.0
Ethyl methacrylate	97-63-2	ND
Ethyl methanesulfonate	62-50-0	ND
Famphur	52-85-7	ND

TABLE V. (cont)

Compound	CAS number	LOQ mg/kg
Fluoranthene	206-44-0	1.0
Fluorene	86-73-7	1.0
Hexachlorobenzene	118-74-1	1.0
Hexachlorobutadiene	87-68-3	1.0
Hexachlorocyclopentadiene	77-47-4	1.0*,d
Hexachloroethane	67-72-1	1.0
Hexachlorophene	70-30-4	ND
Hexachloropropene	1888-71-7	ND
Indeno(1,2,3-cd)pyrene	193-39-5	1.0
Isodrin	465-73-6	ND
Isosafrole	120-58-1	ND
Isophorone	78-59-1	1.0
Kepone	143-50-0	ND
3-Methylcholanthrene	56-49-5	ND
2-Methylnaphthalene	91-57-6	1.0
2-Methylphenol	95-48-7	1.0 *,c
4-Methylphenol	106-44-5	1.0 *,c
Methapyrilene hydrochloride	91-80-5	ND
Methyl methacrylate	80-62-6	ND
Methyl methanesulfonate	66-27-3	ND
Methyl Parathion	296-00-0	ND
Naphthalene	91-20-3	1.0
2-Nitroaniline	88-74-4	1.0
3-Nitroaniline	99-09-2	1.0 *,c
4-Nitroaniline	0-01-6	1.0 *,c
Nitrobenzene	98-95-3	1.0
2-Nitrophenol	88-75-5	1.0
4-Nitrophenol	100-02-7	1.0 *,c

TABLE V. (cont)

Compound	CAS number	LOQ mg/kg
4-Nitroquinoline-1-oxide	56-57-5	ND
5-Nitro-2-methylaniline	99-55-8	ND
N-Nitrosodiethylamine	55-18-5	ND
N-Nitrosomethylethylamine	10595-95-6	ND
N-Nitroso-di-n-butylamine	924-16-3	ND
N-nitrosodimethylamine	62-75-9	1.0 *,c
N-nitrosodiphenylamine	86-30-6	1.0
N-Nitroso-di-n-propylamine	621-64-7	1.0 *
o-Toluidine	95-53-4	ND
Parathion	56-38-2	ND
Pentachloroethane	76-01-7	ND
Pentachloronitrobenzene	82-68-8	ND
Pentachlorophenol	87-86-5	1.0 *,c
Phenacetin	62-44-2	ND
Phenanthrene	85-01-8	1.0
Phenol	8-95-2	1.0
Phorate	298-02-2	ND
2-Picoline	109-06-8	ND
Pronamide	23950-58-5	ND
Pyridine	110-86-1	ND
Pyrene	129-00-0	1.0
Safrole	94-59-7	ND
2,3,4,6-Tetrachlorophenol	58-90-2	ND
1,2,4-Trichlorobenzene	120-82-1	1.0
2,4,5-Trichlorophenol	95-95-4	1.0

TABLE V. (cont)

Compound	CAS number	LOQ mg/kg
O,O,O-Triethyl phosphorate	126-68-1	ND
2,4,6-Trichlorophenol	88-06-2	1.0
sym-Trinitrobenzene	99-35-4	ND
Tetraethyl dithiophosphate	3689-24-5	ND

* = The limit of quantitation has not been verified for these analytes based upon a Method Detection Limit study. All others averaged better than 70% analyte recovery based upon seven repetitions. The amount of each analyte spiked was 330 μg into 1.0 L.

a = Exhibits nonreproducible chromatography and oxidative loss during concentration.

c = These analytes are subject to erratic chromatographic performance and/or thermal decomposition in the gas chromatograph inlet.

d = Subject to thermal decomposition in the chromatographic inlet, chemical reaction with acetone in solution, and photochemical decomposition.

ND = not determined for these analytes.

Limits of quantitation (LOQ) will be two times greater for soil/sediment matrices which have been GPC cleaned.

VOLATILE ORGANIC COMPOUNDS IN SOIL AND SEDIMENT: CAPILLARY COLUMN TECHNIQUE—GC/MS MOBILE LABORATORY METHOD

Analyte: Volatile organic compounds	**Method No.:** MLO720
Matrix: Soil or sediment	**Procedure:** Purge/trap GC/MS, capillary column
Effective Date: 02/01/90	**Author:** Laura Kelly Matthew Monagle

SAFETY NOTE: Before beginning this procedure, read all the Material Safety Data Sheets for the chemicals listed in Sec. 6. Read Sec. 4.3. of the EM-9 Safety Manual for information on personal protective clothing and equipment. Read Sec. 11 of this procedure and Source Materials 12.3 and 12.4 for proper waste disposal practices.

1. Principle of Method

1.1. Volatile organic compounds are purged from the sample onto a sorbent material. These analytes are then desorbed into a gas chromatograph (GC). The column is temperature-programmed and analytes are separated and detected with a mass spectrometer (MS).

1.2. Qualitative identification is performed by analyzing standards under the same conditions used for samples and comparing resultant mass spectra and GC retention times. Each identified component is quantified by relating the MS response for an appropriately selected ion produced by that compound to the MS response for another ion produced by an internal standard.

2. Analytes and Limit of Quantitation

Internal Standards	Surrogates
Pentafluorobenzene	1,2-Dichloroethane-d_4
1,4-Difluorobenzene	Toluene-d_8
1,4-Difluorobenzene-d_4	4-Bromofluorobenzene
Chlorobenzene-d_5	

2.1. Table I is a list of volatile organic compounds and their reporting limits of quantitation (LOQs). (Tables I-IV are found at the end of this procedure.)

2.2. Table II lists the purgeable organic compounds and their characteristic masses. The volatile internal standards with the corresponding analytes are listed in Table III.

3. Interferences

3.1. Impurities in the purge gas and solvent vapors in the laboratory can contaminate samples. The analytical system must be demonstrated to be free from contamination under the condition of the analysis by running laboratory reagent blanks (i.e., method blanks). The use of non-TFE tubing, non-TFE thread sealants, or flow controllers with rubber components in the purging device must be avoided.

3.2. Samples can be contaminated by diffusion of volatile organics (particularly fluorocarbons and methylene chloride) through the septum seal into the sample during storage and handling. A trip blank, prepared from reagent water and carried through the holding period and the analysis protocol, serves as a check on such contamination. One trip blank per request group should be analyzed.

3.3. Contamination by carryover can occur whenever high-level and low-level samples are sequentially analyzed. Whenever an unusually concentrated sample is encountered, all following samples must be reanalyzed if carryover is suspected, or a method blank should follow until the contamination has been eliminated.

4. Collection and Storage of Samples

4.1. Soil samples are collected in 40-mL screw-cap VOA vials with Teflon-lined silicone septa. The vials and septa should be washed with soap and water, rinsed with distilled deionized water, placed in a muffle furnace or oven, and dried at 70°C for approximately 1 h.

4.2. VOA vials for samples with solid or semisolid (sludges) matrices should be filled as completely as possible. The vials should be tapped lightly as they are filled to try to eliminate as much free air space as possible. Two VOA vials should be filled at each sample location.

4.3. All samples must be refrigerated between 0 and 4°C.

4.4. The holding time for soil samples is 14 days from the date of collection.

5. Apparatus

5.1 Purge and trap configuration.

5.1.1. A purge-and-trap apparatus as detailed in SW-846 Method 5030 is used. Applicable operating parameters are determined by the analyst (adsorbent trap selection, purge time, desorb time and temperature, and bake time and temperature).

5.2. Gas chromatograph/mass spectrometer/data system.

5.2.1. The GC must be temperature-programmable and should be equipped with adjustable differential flow controllers so that the column flow rate will be reproducible throughout desorption and temperature program operation. The GC is interfaced to the MS with a jet separator or is directly coupled.

5.2.2. Gas chromatographic column: Supelco VOCOL, 105-m x 0.53-mm x 3.0-μm film thickness or equivalent.

5.2.3. Mass spectrometer: Mass-spectral data are obtained with electron-impact ionization at a nominal electron energy of 70 eV. The mass spectrometer scans from 35 to 300 amu every 1 s or less and must produce a mass spectrum that meets all criteria in Step 7.2.1 when 50 ng of 4-bromofluorobenzene is introduced into the GC.

5.2.4. Data system: A computer system that allows the continuous acquisition and storage on machine-readable media of all mass spectra obtained throughout the duration of the chromatographic program must be interfaced to the mass spectrometer. The computer must have software that allows searching any GC/MS data file for ions of a specified mass and plotting such ion abundances versus time or scan number. This type of plot is defined as an extracted ion current profile (EICP). Software must also be available that allows integrating the abundances in any EICP between NIST and/or EPA mass-spectral libraries.

5.3. Microsyringes: 10-, 25-, 100-, and 500-μL, for injecting the appropriate standards into the reagent water.

5.4. Syringes: 5- or 25-mL, for measuring the required aliquot of reagent water.

5.5. Balance: analytical, capable of accurately weighing 0.001 g.

5.6. Micro reaction vessels: 2- or 3-mL with Teflon-lined miniert valves, for the storage of stock or secondary standard solutions.

5.7. Disposable Pasteur pipettes: used for transferring stock or secondary standard solution from the volumetric flask to the micro reaction vessels.

6. Reagents/Standards

6.1. Methanol (CH_3OH). Pesticide quality or equivalent, demonstrated to be free of analytes. Must be stored apart from other solvents.

6.2. Reagent water. Must be purged with nitrogen for at least 30 min before use. Water must be free of interferents at the limit of quantitation (LOQ).

Alternatively, HPLC grade water may be purchased. Purity of water used must be verified by GC/MS analysis.

6.3. Stock solutions. All instructions for preparation of stock solutions and dilutions are in the VOA standard preparation notebook located in Room 115, TA-59. See Table IV.

6.4. Instructions for storage of all standards, and expiration dates are found in the VOA standards preparation notebook. Expiration dates are to be strictly enforced.

6.5. Surrogate standards. The surrogates used are 1,2-dichloroethane-d_4, toluene-d_8, and 4-bromofluorobenzene.

6.6. Internal standards. The internal standards used are chlorobenzene-d_5, 1,4-difluorobenzene, 1,4-dichlorobenzene-d_4, and pentafluorobenzene.

6.7. 4-Bromofluorobenzene (BFB) standard. A standard solution containing 50 ng/μL of BFB in methanol is used for verifying the tune of the MS.

6.8. Calibration standards. Secondary calibration standards are prepared from calibration stock standards. The solutions are prepared in 5- or 25-mL aliquots of reagent water.

6.9. Matrix spiking standards. Matrix spiking standard is prepared from volatile organic compounds which are representative of the compounds being investigated. The compounds used are 1,1-dichloroethene, benzene, trichloroethene, toluene, and chlorobenzene. A 10-μL aliquot of the matrix spiking standard is used for 5-mL samples (50-μL aliquot for 25-mL aqueous samples).

7. Calibration

7.1. See Step 9.1 for explanation of Quality Control requirements in the tiered structure.

7.2. Initial calibration, Tiers 2 and 3.

7.2.1. Each GC/MS system must be hardware-tuned to meet the criteria listed below for a direct injection or purging of 50 ng of 4-bromofluorobenzene. Analyses can not proceed until the criteria are met.

Mass	Relative Abundance Criteria
50	15 to 40% of mass 95
75	30 to 60% of mass 95
95	base peak, 100% relative abundance
96	5 to 9% of mass 95
173	<2% of mass 174
174	>50% of mass 95
175	5 to 9% of mass 174
176	≥95% but ≤101% of mass 174
177	5 to 9% of mass 176

7.2.2. Five system performance check compounds (SPCCs) are checked for a minimum average response factor (RF): chloromethane, 1,1-dichloroethane, bromoform, 1,1,2,2-tetrachloroethane, and chlorobenzene. The minimum acceptable average RF for these compounds should be 0.300 (0.250 for bromoform). These compounds typically have RFs of 0.4-0.6 and are used to check overall instrument performance and/or degradation caused by contaminated lines or active sites in the system.

7.2.2.1. Chloromethane. This compound is easily lost as a result of fast purge flow, or because the stock or working calibration standard (VOC #6 mix only) is degrading. The purge gas (helium) flow rate should be 25-40 mL/min on the purge-and-trap device. Optimize the flow rate to provide the best response for chloromethane and bromoform.

7.2.2.2. Bromoform. This compound will most likely be purged very poorly if the purge flow is too slow. Cold spots and/or active sites in the transfer line may adversely affect response.

7.2.2.3. Tetrachloroethane and 1,1-dichloroethane. These compounds are degraded by contaminated transfer lines in purge-and-trap systems and/or active sites in trapping materials.

7.2.3. Continuing calibration check (CCC) compounds are used as a measure of the linearity of the response factors. The percent relative standard deviation (%RSD) is checked for the CCCs. These compounds are 1,1-dichloroethene, chloroform, 1,2-dichloropropane, toluene, ethylbenzene, and vinyl chloride. The maximum %RSD for these compounds is 30%. The %RSD for all analytes should be < 30%.

7.3. Continuing daily calibration, Tiers 1, 2 and 3.

7.3.1. Before samples are analyzed, inject or purge 50 ng of the 4-bromofluorobenzene (BFB) standard (1 μL of the 25-μg/mL

4-bromofluorobenzene solution for direct injection and 10 μL of the 25-μg/mL 4-bromofluorobenzene into 5 mL of reagent water for purging). The resultant mass spectra for BFB must meet all the criteria given in Step 7.1.1. This procedure must be performed every 12 h of analysis.

7.3.2. Before samples are analyzed, the initial calibration curve for each compound must be checked and verified once every 12 h by analyzing a 50-ng/mL continuing calibration standard and checking the SPCCs and CCCs.

7.3.3. The minimum response factor for the SPCCs must be 0.300 (0.250 for bromoform). Some possible problems are standard mixture degradation, contamination at the front end of the analytical column, and active sites in the column or chromatographic system.

7.3.4. The CCCs are used to check the validity of the initial calibration by calculating the percent difference between the average response factor from the initial calibration and the response factor from the current verification check standard. If the percent difference for any compound is 20%, the laboratory should consider this a warning limit. If the percent difference for each CCC is <25%, the initial calibration is assumed to be valid. If this criterion is not met (>25% difference) for any one CCC, corrective action must be taken. The percent difference for all analytes should be less than or equal to 25%. Corrective action can include, but is not limited to, reanalysis of the verification check standard, cutting a portion of the column, or using a new working calibration standard. If a source of the problem cannot be determined after corrective action has been taken, a new five-point calibration (initial calibration) must be generated. See Step 7.1. Both SPCC and CCC criteria **must** be met before quantitative sample analysis begins.

8. Procedure

8.1. Low- level soil analysis.

8.1.1. BFB tuning criteria and continuing calibration criteria must be met before analysis of samples can begin.

8.1.2. Parameters.

Precision Autosampler	O I Sample Concentrator
Purge flow: 35 mL/min	Purge time: 8-10 min
Purge temp: 40°C	Desorb preheat: 20°C
Soil program for all samples	Desorb time: 2.00 min
Standard: Yes	Desorb temp: 180°
Line heat: 100	Trap bake time: 14.0 min

Sample heat: 40	Bake temp: 215
Preheat: 30 sec.	Transfer line: 135
Water volume: 5 mL	Valve temp: 125
Pre-purge: 0	
Purge time: 8.0 min	
Flushes: 1	
Soil stir: Yes	
Desorb time: 2.0 min	
Water trap volume: 0	

8.1.3. A sample batch typically consists of a BFB, continuing calibration, reagent water blank, and samples up to the 12-h limit on BFB tune. Samples are set up as described in the following sections.

8.1.4. Assemble the bottom portion of the autosampler vial. Place 5 g of soil or sludge on top of the frit of the autosampler vial. Weigh the vial. Record the exact weight. Add a stirring bar and seal the vial. If percent moistures have not been done, see Section 8.3 for instructions on percent moisture determinations. All data is to be recorded on the VOA benchsheet.

8.1.5. For each sample analyzed, including BFB and continuing calibrations, an entry must be made in the sample injection log associated with each instrument. This entry must be made within 24 h of data acquisition. This entry includes factors such as date and time sample was run, internal standard values, and surrogate recovery.

8.1.6. If the initial analysis of a sample shows a concentration of analytes that exceeds the initial calibration range (higher than 200 μg/kg), the sample will need to be reanalyzed using an aliquot of <5 g but not <1 g. If compound saturation still occurs with a 1-g aliquot, a medium-level analysis is necessary (see Section 8.2). Secondary-ion quantitation is allowed only when there are sample interferences with the primary ion. When a sample is analyzed that has saturated ions from a compound, the analysis must be followed by a blank water analysis. Sample analysis may not resume until a blank can be analyzed and found free of interferences. If this occurs during an automated run, reanalyze all following samples if carryover from the saturated compound is suspected.

8.1.7. If one or more of the surrogate spiking compounds are not within the control limits and/or the internal standard areas are +100%/-50% of the continuing calibration in a sample, that sample should be reanalyzed. See Section 9.2 for details.

8.1.8. A matrix spike (MS), matrix spike duplicate (MSD), and matrix spike control (MSC) may be analyzed with every analytical batch, depending

upon which QC Tier is being used. A sample submitted by a customer will be used as the matrix medium. Ten microliters of the matrix spike mixture is injected into 5 mL of reagent water and then added to a 5-g sample. See Step 8.1.5.

8.1.9. If a trip, field, or holding blank is submitted with the soil samples, the sample should be prepared and analyzed as a method blank. The sample is analyzed with the associated soil samples using the same initial and continuing calibration. The surrogate recoveries for the trip, field, or holding blank should meet the control limits set for soil analysis.

8.2. Medium-level soil analysis.

8.2.1. The medium-level soil method is based on extracting the soil or sediment sample with methanol. An aliquot of the methanol extract is added to reagent water containing the surrogate and internal standard. This method is used when saturation occurs or would occur during analysis of a 1-g sample.

NOTE: Steps 8.2.2 and 8.2.3 must be performed rapidly to avoid loss of volatile organics.

8.2.2. To avoid the possible loss of volatile compounds, gently mix the contents of the sample container including any supernatant liquids with a narrow metal spatula. Using a top-loading balance, weigh 5 g of sample (wet weight) into a tared 40-mL vial. Record the actual weight to the nearest 0.1 g.

8.2.3. Quickly add 5.0 mL of methanol to the vial. Cap and shake for 2 min.

8.2.4. If the initial analysis of a sample shows a concentration of analytes that exceeds the initial calibration range (higher than 200 μg/kg), the sample will need to be diluted and reanalyzed. Secondary-ion quantitation is allowed only when there are sample interferences with the primary ion. If a primary-ion saturation occurs during an automated run, all following samples should be reanalyzed if carryover from the saturated compound is suspected.

8.2.5. For a matrix spike in the medium-level sediment or soil samples, add 10.0 μL of matrix spike solution to the 5-mL syringe containing the methanol extract.

8.3. Determine percent moisture on all samples that are not radioactive or biohazards or where an insufficient quantity of sample was submitted. If a hazard prevents this determination, document this and include in the data packet. Determine percent moisture as follows:

8.3.1. Weigh an empty aluminum weighing pan. Record weight.

8.3.2. Add approximately 5 g of sample and reweigh. Record weight.

8.3.3. Place in a drying oven at 80-100°C for at least 24 h. Cool and reweigh, recording dry weight.

8.3.4. Percent moisture is calculated by:

$$\frac{\text{wet weight} - \text{dry weight}}{\text{dry weight}} \times 100$$

9. Quality Control

9.1. The Quality Control (QC) requirements are defined in a tiered structure as follows:

Tier 1: 1-point calibration every day.
1 method blank every day.

Tier 2: 3-point initial calibration, daily check standard.
BFB tune check every day.
1 method blank every day.

Tier 3: 5-point initial calibration, daily check standard.
BFB tune check every day.
1 method blank per analytical batch.
Blind QC samples at a rate of no more than 10%.
Matrix spike and matrix spike duplicate for each analytical batch.
12-h clock for tune check and daily check standard.

9.2. Control limits.

9.2.1. The control limits that follow are applicable only to the QC Tier requested for each analysis.

9.2.2. The method blank must be free of any target volatile organic components at or above the limit of quantitation (LOQ) with the exception of acetone, methylene chloride, 2-butanone, and toluene. These compounds can be detected in the method blank up to 5 times their LOQ.

9.2.3. The following surrogates are spiked into each sample and analyzed as a measure of analyte recovery: 1,2-dichloroethane-d_4, toluene-d_8, and

4-bromofluorobenzene. If one or more of the surrogate spiking compounds are not within the control limits, those samples should be reanalyzed. If the reanalysis demonstrates similar results and the surrogate recoveries in the associated method blank are within the control limits, the out-of-control situation could be attributed to matrix effect and the results from the initial analysis should be reported. If the reanalysis of the sample has surrogate recoveries within the control limits, the out-of-control condition could be due to analyst error or to a degradation of the surrogate spiking mix. In this case the results from the reanalysis should be reported.

SURROGATE RECOVERY CONTROL LIMITS

1,2-Dichloroethane-d_4	70-121%
Toluene-d_8	81-117%
4-Bromofluorobenzene	74-121%

9.2.4. A matrix spike and a matrix spike duplicate are analyzed under Tier 3 QC requirments. Spikes are run at a frequency of 10% for each respective matrix. The data is interpreted in terms of percent recovery and relative percent difference (RPD). The control limits for percent recovery and RPD are generated from the historical data of each respective matrix.

9.2.5. "Blind" QC samples are analyzed as required under the tier structure. Those analyses requiring blind QCs must be run at a frequency of 10% of the total samples analyzed per matrix. These samples are analyzed in exactly the same manner as submitted samples.

10. Data Interpretation

10.1. Qualitative analysis.

10.1.1. An analyte is identified by comparison of the sample mass spectrum with the mass spectrum of the compound from a standard (standard reference spectrum). The standard reference spectrum is obtained through analysis of a calibration standard. Two criteria must be satisfied to verify identification: (1) elution of the sample component at the same GC relative retention time (RRT) as that component in the daily standard; and (2) correspondence of the mass spectra of the sample component and the standard component.

10.1.1.1. The sample component RRT must compare within ±0.06 units of the RRT of the standard component in the daily calibration. If coelution of interfering components prohibits accurate assignment of the sample component RRT from the total ion chromatogram, the RRT should be assigned by

using extracted ion current profiles (EIPCs) for ions unique to the component of interest.

10.1.1.2. All ions present in the standard mass spectrum at a relative intensity >10% must be present in the sample spectrum. The relative intensities of these ions must agree within ±20% between the standard and sample spectra.

EXAMPLE. For an ion with an abundance of 50% in the standard spectra, the corresponding sample ion abundance must be between 30% and 70%.

10.1.2. For samples containing components not associated with the calibration standards (non-target volatile organic components), a library search may be made for the purpose of tentative identification. Ten organic compounds of greatest concentration which are not identified as part of the calibration standard may be identified. Non-target volatile organic components with a response of <10% of the nearest internal standard are not required to be searched. Comparison of sample spectra with the spectra from the library searches will assign a tentative identification.

10.1.2.1. Relative intensities of major ions in the reference spectrum (ions >10% of the most abundant ion) should be present in the sample spectrum.

10.1.2.2. The relative intensities of the major ions should agree within ±20%.

EXAMPLE. For an ion with an abundance of 50% in the standard spectrum, the corresponding sample ion abundance must be between 30 and 70%.

10.1.2.3. Molecular ions present in the reference spectrum should be present in the sample spectrum.

10.1.2.4. Ions present in the sample spectrum but not in the reference spectrum should be reviewed for possible background contamination or presence of coeluting compounds.

10.1.2.5. Ions present in the reference spectrum but not in the sample spectrum should be reviewed for possible subtraction from the sample spectrum because of background contamination of coeluting peaks.

If the compound does not meet the identification criteria listed above, the compound shall be reported as unknown.

10.2. Quantitative analysis.

10.2.1. When a compound has been identified, the quantitation of that compound will be based on the integrated abundance from the EICP of the primary characteristic ion (see Table II). The compound will be quantitated using an internal standard technique. The internal standard used will be the one nearest the retention time of that of a given analyte.

10.2.1.2. The concentration of each identified analyte in the sample is calculated as follows:

$$\text{concentration } (\mu g/kg) = \frac{(Ax)\ (Is)}{(Ais)\ (RF)\ (W_s)\ (D)} ,$$

where Ax = area of characteristic ion for compound being measured,
Is = amount of internal standard injected (ng),
Ais = area of characteristic ion for the internal standard,
RF = response factor for compound being measured,
W_s = weight of sample extracted (g) or purged, and
D = $\frac{100 - \%\ \text{moisture}}{100}$.

10.2.2. Where applicable, an estimate of concentration for non-target volatile organic components in the sample should be made. The areas Ax and Ais (defined in Step 10.2.1.2) should be from the total ion chromatogram, and the RF for the compound should be assumed to be 1. The concentration obtained should be reported indicating (1) that the value is an estimate and (2) which internal standard was used to determine concentration. The nearest internal standard free of interferences is used.

10.2.3. Results are reported without method blank correction. Method blanks will be reported as discrete samples.

11. Proper Waste Disposal Practices

11.1. General waste management.

11.1.1. Each analyst within the section shall be given Waste Generator Training by EM-8 within 90 days of date of hire.

11.1.2. Wherever possible, the generation of waste shall be minimized through reduction, reuse, or recycling. Wherever possible, containers should be segregated to reflect the nature of the hazardous waste and the eventual waste-disposal methods. For example, chlorinated solvent wastes should be segregated from flammable, nonchlorinated solvents and >50-ppm PCB-contaminated waste should be segregated from <50-ppm PCB-contaminated waste. This is especially important in analysis areas where the waste generated is considered to be mixed waste.

11.1.3. Categorize the waste using a Waste Profile Form from EM-8.

11.1.4. Upon completion of a Waste Profile Form, the waste is disposed of by completing a Waste Disposal Request Form from EM-7. Approximately 30 days is required for the disposal of waste after the completion of the listed forms.

11.2. Solid waste.

11.2.1. Solid hazardous waste, such as contaminated paper towels, pipettes, spent syringes, and glass vials, is accumulated in a covered plastic container lined with a plastic bag. The container is labeled with a hazardous waste label identifying the hazard, the type of material being stored (i.e., pipettes, paper towels, etc.), the accumulation start date, and the laboratory of origin.

11.2.2. The waste container is opened only for the time necessary to add the waste.

11.3. Liquid waste.

11.3.1. Liquid wastes, such as spent samples and spent solvents that are not reuseable, are accumulated in glass or steel containers appropriate for the type of sample being stored. For example, caustic materials should be stored in glass containers whereas spent solvents that are not to be recycled should be stored in metal containers.

11.3.2. All containers storing hazardous liquid materials must be secondarily contained. The container is labeled with a hazardous waste label identifying the hazard, the type of material being stored (i.e., pipettes, paper towels, etc.), the accumulation start date, and the laboratory of origin.

11.3.3. The waste container is opened only for the time necessary to add the waste.

11.4. Unused samples.

11.4.1. Return unused environmental samples to the Sample Management section for disposal.

12. Source Materials

12.1. "Test Methods for Evaluating Solid Waste, Physical/Chemical Methods," Laboratory Manual Vol. 1B Method 8260, report no. SW-846 (November 1986).

12.2. "Statement of Work for Organics Analysis," USEPA Contract Laboratory Program (October 1986).

12.3. "Hazardous and Mixed Waste," Administrative Requirement 10-3, in *Environment, Safety, and Health Manual*, Los Alamos National Laboratory Manual, Chapter 1 (most recent edition).

12.4. "Low-Level Radioactive Solid Waste," Administrative Requirement 10-2, in *Environment, Safety, and Health Manual*, Los Alamos National Laboratory Manual, Chapter 1 (most recent edition).

TABLE I. VOLATILE ORGANIC COMPOUNDS

Analyte	CAS No.	LOQ µg/kg
Chloromethane	74-87-3	20
Vinyl chloride	75-01-4	20
Bromomethane	74-83-9	20
Chloroethane	75-00-3	20
Acetone	67-64-1	20
Acrolein	107-02-8	200
Acrylonitrile	107-13-1	200
2-Chloroethyl vinyl ether	110-75-8	200
Dichlorodifluoromethane	75-71-8	10
Iodomethane	74-88-4	5.0
Trichlorotrifluoroethane	76-13-1	5.0
Trichlorofluoromethane	75-69-4	5.0
Methylene chloride	75-09-2	5.0
1,1-Dichloroethene	75-35-4	5.0
Carbon disulfide	75-15-0	5.0
trans-1,2-Dichloroethene	156-60-5	5.0
1,1-Dichloroethane	75-34-3	5.0
cis-1,2-Dichloroethene	156-59-2	5.0
Bromochloromethane	74-97-5	5.0
Chloroform	67-66-3	5.0
1,2-Dichloroethane	107-06-2	5.0
1,1-Dichloropropane	563-58-6	5.0
Vinyl acetate	108-05-4	10
2-Butanone	78-93-3	20
2,2-Dichloropropane	594-20-7	5.0
1,1,1-Trichloroethane	71-55-6	5.0
Carbon tetrachloride	56-23-5	5.0
Benzene	71-43-2	5.0

TABLE I. VOLATILE ORGANIC COMPOUNDS (cont)

Analyte	CAS No.	LOQ µg/kg
1,2-Dichloropropane	78-87-5	5.0
Trichloroethene	79-01-6	5.0
Dibromomethane	74-95-3	5.0
Bromodichloromethane	75-27-4	5.0
trans-1,3-Dichloropropene	1006-10-26	5.0
cis-1,3-Dichloropropene	1006-10-15	5.0
1,1,2-Trichloroethane	79-00-5	5.0
1,3-Dichloropropane	142-28-9	5.0
Chlorodibromomethane	124-48-1	5.0
4-Methyl-2-pentanone	10-81-01	20
Toluene	108-88-3	5.0
2-Hexanone	59-17-86	20
1,2-Dibromoethane	106-93-4	5.0
Tetrachloroethene	127-18-4	5.0
Chlorobenzene	108-90-7	5.0
1,1,1,2-Tetrachloroethane	630-20-6	5.0
Ethylbenzene	100-41-4	5.0
o,m,p-Xylene (mixed)	133-020-7	5.0
Styrene	100-42-5	5.0
Bromoform	75-25-2	5.0
1,1,2,2-Tetrachloroethane	79-34-5	5.0
1,2,3-Trichloropropane	96-18-4	5.0
Isopropylbenzene	98-82-8	5.0
Bromobenzene	108-86-1	5.0
n-Propylbenzene	103-65-1	5.0
2-Chlorotoluene	95-49-8	5.0
4-Chlorotoluene	106-43-4	5.0
1,3,5-Trimethylbenzene	108-67-8	5.0

TABLE I. VOLATILE ORGANIC COMPOUNDS (cont)

Analyte	CAS No.	LOQ µg/kg
tert-Butylbenzene	98-06-6	5.0
1,2,4-Trimethylbenzene	95-63-6	5.0
sec-Butylbenzene	135-98-8	5.0
1,3-Dichlorobenzene	541-73-1	5.0
1,4-Dichlorobenzene	106-46-7	5.0
p-Isopropyltoluene	99-87-6	5.0
1,2-Dichlorobenzene	95-50-1	5.0
n-Butylbenzene	104-51-8	5.0
1,2-Dibromo-3-chloropropane	96-12-8	100
Hexachlorobutadiene	87683	5.0
Napthalene	91203	5.0
1,2,3-Trichlorobenzene	87616	5.0

TABLE II. CHARACTERISTIC MASSES (M/Z) FOR PURGEABLE ORGANIC COMPOUNDS

Analyte	Primary Characteristic Ion	Secondary Characteristic Ion(s)
Acetone	43	58
Acrylonitrile	53	52
Acrolein	57	56,55
Benzene	78	-
Bromobenzene	156	77,158
Bromochloromethane	128	49,130
Bromodichloromethane	83	85,127
Bromoform	173	175,254
Bromoethane	94	96
2-Butanone	43	72
n-Butylbenzene	91	92,134
sec-Butylbenzene	105	134
tert-Butylbenzene	119	91,134
Carbon tetrachloride	117	119
Chlorobenzene	112	77,114
Chloroethane	64	66
Chloroethyl vinyl ether	63	65,106
Chloroform	83	85
Chloromethane	50	52
2-Chlorotoluene	91	126
4-Chlorotoluene	91	126
1,2-Dibromo-3-chloropropane	75	155,157
Dibromochloromethane	129	127
1,2-Dibromoethane	107	109,188
Dibromoethane	93	95,174
1,2-Dichlorobenzene	146	111,148
1,3-Dichlorobenzene	146	111,148
1,4-Dichlorobenzene	146	111,148
Dichlorodifluoromethane	85	87
1,1-Dichloroethane	63	65,83
1,2-Dichloroethane	62	98
1,1-Dichloroethene	96	61,63
cis-1,2-Dichloroethene	96	61,98
trans-1,2-Dichloroethene	96	61,98
1,2-Dichloropropane	63	112
1,3-Dichloropropane	76	78

TABLE II. CHARACTERISTIC MASSES (M/Z) FOR PURGEABLE ORGANIC COMPOUNDS (cont)

Analyte	Primary Characteristic Ion	Secondary Characteristic Ion(s)
2,2-Dichloropropane	77	97
1,1-Dichloropropene	75	110,77
cis-1,3-Dichloropropene	75	77,39
trans-1,3-Dichloropropene	75	77,39
Ethylbenzene	91	106
2-Hexanone	43	58,85,100
Isopropylbenzene	105	120
p-Isopropyltoluene	119	134,91
Methylene chloride	84	86,49
4-Methyl-2-penatone	43	58,85,100
n-Propylbenzene	91	120
Styrene	104	78
1,1,1,2-Tetrachloroethane	131	133,119
1,1,2,2-Tetrachloroethane	83	131,85
Tetrachloroethene	166	168,129
Toluene	92	91
1,1,1-Trichloroethane	97	99,61
1,1,2-Trichloroethane	83	97,85
Trichloroethene	95	130,132
Trichlorofluoromethane	101	103
1,2,3-Trichloropropane	75	77
1,2,4-Trimethylbenzene	105	120
1,3,5-Trimethylbenzene	105	120
Vinyl chloride	62	64
o-Xylene	106	91
m,p-Xylene	106	91
<u>INTERNAL STANDARDS/SURROGATES</u>		
Pentafluorobenzene	168	
1,4-Difluorobenzene	114	
Chlorobenzene-d_5	117	
1,4-Dichlorobenzene	152	
4-Bromofluorobenzene	95	174,176
Toluene-d_8	98	
1,2-Dichloroethane-d_4	65	

TABLE III. VOLATILE INTERNAL STANDARDS WITH CORRESPONDING ANALYTES ASSIGNED FOR QUANTITATION

Pentafluorobenzene

Acetone
Acrolein
Acrylonitrile
Benzene
Bromochloromethane
Bromomethane
2-Butanone
Carbon disulfide
Carbon tetrachloride
Chloroethane
Chloroform
Chloromethane
Dichlorodifluoromethane
1,2-Dichloroethane
1,1-Dichloroethane
1,1-Dichloroethene
1,2-Dichloroethane-d_4 [a]
cis-1,2-Dichloroethene
trans-1,2-Dichloroethene
2,2-Dichloropropane
1,1-Dichloropropene
Iodomethane
Methylene chloride
1,1,1-Trichloroethane
Trichlorofluoromethane
Trichlorotrifluoroethane
Vinyl acetate
Vinyl chloride

1,4-Difluorobenzene

Bromodichloromethane
2-Chloroethyl vinyl ether
1,2-Dibromoethane
Dibromomethane
trans-1,3-Dichloropropene
Toluene-d_8 [a]
Trichloroethene

Chlorobenzene

Bromoform
Chlorodibromomethane
Chlorobenzene
1,2-Dibromoethane
1,3-Dichloropropane
cis-1,3-Dichloropropene
Ethylbenzene
2-Hexanone
4-Methyl-2-pentanone
Styrene
Toluene
1,1,2-Trichloroethane
Tetrachloroethane
1,1,1,2-Tetrachloroethane
o,m,p-Xylenes

1,4-Dichlorobenzene-d_4

Bromobenzene
n-Butylbenzene
sec-Butylbenzene
tert-Butylbenzene
2-Chlorotoluene
4-Chlorotoluene
1,2-Dibromo-3-chloropropane

TABLE III. VOLATILE INTERNAL STANDARDS WITH CORRESPONDING ANALYTES ASSIGNED FOR QUANTITATION (cont)

1,4-Dichlorobenzene-d_4 (cont)
1,2-Dichlorobenzene
1,3-Dichlorobenzene
1,4-Dichlorobenzene
n-Propylbenzene
1,1,2,2-Tetrachloroethane
1,2,3-Trichloropropane
1,2,4-Trimethylbenzene
1,3,5-Trimethylbenzene
4-Bromofluorobenzene [a]

[a] Surrogate

TABLE IV. STOCK AND WORKING CALIBRATION SOLUTIONS

Chemical name/concentration	Final concentration Stock (μg/mL)	Working std. (μg/mL)
INTERNAL STANDARD MIX		
Pentafluorobenzene (1000 μg/mL)	50	NA
Chlorobenzene-d_5 (1000 μg/mL)	50	NA
1,4-Difluorobenzene (1000 μg/mL)	50	NA
1,4-Dichlorobenzene-d_4 (1000 μg/mL)	50	NA
CALIBRATION STANDARD MIX		
HSL Custom standard		
Acetone (1000 μg/mL)	100	25
Methyl ethyl ketone (1000 μg/mL)	100	25
Carbon disulfide (1000 μg/mL)	100	25
4-methyl-2-pentanone (1000 μg/mL)	100	25
Vinyl acetate (1000 μg/mL)	100	25
2-Chloroethyl vinyl ether (1000 μg/mL)	100	25
2-Hexanone (1000 μg/mL)	100	25
Acrolein (1000 μg/mL)	100	25
Acrylonitrile (1000 μg/mL)	100	25
Iodomethane (1000 μg/mL)	100	25
Freon 113 (1000 μg/mL)	100	25
Purgeable Surrogate Standard Mix - CLP		
Bromofluorobenzene (250 μg/mL)	50	NA
1,2-Dichloroethane-d_4 (250 μg/mL)	50	NA
Toluene-d_8 (250 μg/mL)	50	NA

TABLE IV. (cont)

Chemical name/concentration	Final concentration Stock (μg/mL)	Working std. (μg/mL)
Volatile Organic Compounds Mix #1		
sec-Butylbenzene (2000 μg/mL)	100	25
tert-Butylbenzene (2000 μg/mL)	100	25
Chlolorobenzene (2000 μg/mL)	100	25
2-Chlorotoluene (2000 μg/mL)	100	25
4-Chlorotoluene (2000 μg/mL)	100	25
1,2-Dichlorobenzene (2000 μg/mL)	100	25
1,3-Dichorobenzene (2000 μg/mL)	100	25
1,4-Dichlorobenzene (2000 μg/mL)	100	25
Isopropylbenzene (2000 μg/mL)	100	25
n-Propylbenzene (2000 μg/mL)	100	25
o-Xylene (2000 μg/mL)	100	25
p-Xylene (2000 μg/mL)	100	25
Volatile Organic Compounds Mix #2		
Benzene (2000 μg/mL)	100	25
Bromobenzene (2000 μg/mL)	100	25
n-Butylbenzene (2000 μg/mL)	100	25
Ethylbenzene (2000 μg/mL)	100	25
p-Isopropyltoluene (2000 μg/mL)	100	25
Naphthalene (2000 μg/mL)	100	25
Styrene (2000 μg/mL)	100	25
Toluene (2000 μg/mL)	100	25
1,2,3-Trichlorobenzene (2000 μg/mL)	100	25
1,2,4-Trichlorobenzene (2000 μg/mL)	100	25

TABLE IV. (cont)

Chemical name/concentration	Final concentration Stock (μg/mL)	Working std. (μg/mL)
Volatile Organic Compounds Mix #2 (cont)		
1,2,4-Trimethylbenezne (2000 μg/mL)	100	25
1,2,5-Trimethylbenzene (2000 μg/mL)	100	25
m-Xylene (2000 μg/mL)	100	25
Volatile Organic Compounds Mix #3		
1,2-Dibromo-3-chloropropane (2000 μg/mL)	100	25
1,2-Dibromomethane (2000 μg/mL)	100	25
1,2-Dichloroethane (2000 μg/mL)	100	25
1,2-Dichloropropane (2000 μg/mL)	100	25
1,3-Dichloropropane (2000 μg/mL)	100	25
1,1-Dichloropropene (2000 μg/mL)	100	25
1,3-Dichloropropene (4000 μg/mL) *	400	50
Hexachlorobutadiene (2000 μg/mL)	100	25
1,1,1,2-Tetrachloroethane (2000 μg/mL)	100	25
1,1,2,2-Tetrachloroethane (2000 μg/mL)	100	25
1,1,2-Trichloroethane (2000 μg/mL)	100	25
Trichloroethene (2000 μg/mL)	100	25
1,2,3-Trichloropropane (2000 μg/mL)	100	25
Volatile Organic Compounds Mix #4		
Bromochloromethane (2000 μg/mL)	100	25
Bromoform (2000 μg/mL)	100	25
Carbon tetrachlororide (2000 μg/mL)	100	25
Chloroform (2000 μg/mL)	100	25
Dibromomethane (2000 μg/mL)	100	25

TABLE IV. (cont)

Chemical name/concentration	Final concentration Stock (μg/mL)	Working std. (μg/mL)
Volatile Organic Compounds Mix #4 (cont)		
1,1-Dichloroethane (2000 μg/mL)	100	25
2,2-Dichloropropane (2000 μg/mL)	100	25
Tetrachloroethene (2000 μg/mL)	100	25
1,1,1-Trichloroethane (2000 μg/mL)	100	25
Volatile Organic Compounds Mix #5		
Bromodichloromethane (2000 μg/mL)	100	25
Dibromochloromethane (2000 μg/mL)	100	25
1,1-Dichloroethene (2000 μg/mL)	100	25
cis-1,2-Dichloroethene (2000 μg/mL)	100	25
trans-1,2-Dichloroethene (2000 μg/mL)	100	25
Methylene chloride (2000 μg/mL)	100	25
VOC #6 CALIBRATION STANDARD MIX		
Volatile Organic Compounds Mix #6		
Bromomethane (2000 μg/mL)	100	25
Chloromethane (2000 μg/mL)	100	25
Chloroethane (2000 μg/mL)	100	25
Dichlorodifluoromethane (2000 μg/mL)	100	25
Trichlorofluoromethane (2000 μg/mL)	100	25
Vinyl chloride (2000 μg/mL)	100	25

GROSS ALPHA/BETA SCREENING OF SILICATES IN A MOBILE RADIOLOGICAL LABORATORY

Analyte: Alpha- and beta-emitting nuclides	**Method No.:** MLR100
Matrix: Silicates	**Minimum Detectable Activity:** Alpha: 60 pCi/g Beta: 24 pCi/g
Procedure: Gas flow proportional counting	**Accuracy and Precision:** Alpha: 94 ± 16% Beta: 111 ± 14%
Effective Date: 05/28/92	**Author:** George Brooks

SAFETY NOTE: Before beginning this procedure, read all of the Material Safety Data Sheets for the chemicals listed in Sec. 7. Read Sec. 4.3 of the EM-9 Safety Manual for information on personal protective clothing and equipment. Read Sec. 12 of this procedure and Source Material 13.5 and 13.6 for proper waste disposal practices.

1. Principle of Method

1.1. Samples are mounted directly on stainless steel planchets without chemical dissolution or evaporation.

1.2. Samples are counted for 5 min on a low-background, gas-flow proportional counting system.

2. Sensitivity

2.1. The sensitivity will vary greatly for alpha activity and to a lesser degree for beta activity. The variance of the alpha activity is more than for conventional wet chemistry techniques. This is largely due to the problem of variant self-absorption from the 1 g of silicate within the plate.

2.2. The minimum detectable limit for alpha is 60 pCi/g and for beta 24 pCi/g, based on a 1-g sample and a 5-min count.

3. Accuracy and Precision

3.1. In a gas flow proportional counter the efficiency and crosstalk between the alpha and beta counts may vary greatly, depending on the energy of the alpha or beta emitter. A ^{239}Pu and a ^{137}Cs point source are used as the basis for all crosstalk and relative efficiency examinations. The accuracies of a given measurement will depend on the actual energies of the unknown nuclides.

3.2. The following accuracy and precision measurements were derived from a set of ^{241}Am and ^{137}Cs quality control (QC) samples examined to determine the initial instrument performance characteristics. The solutions used to make the QC samples are NIST traceable:

Water Samples:
Alpha = 94 ± 16% (N = 15)
Beta = 111 ± 14% (N = 9)

4. Interferences

4.1. The crosstalk correction method may not adequately protect from incorrect identification of radiation from samples containing very low-energy alpha or high-energy beta activities.

4.2. Moderate to high levels of gamma radiation can be misinterpreted as alpha/beta counts by the gas-flow proportional counter.

4.3. Because of self-absorption within the sample (especially when soils are counted directly), it must be assumed that ***the activity is evenly dispersed within the sample matrix, and that the counting process is adequately measuring the average activity within the sample.*** In nonhomogenous samples with low levels of alpha activity, the actual sample activity may be underestimated.

4.4. The addition of a thin Mylar sheet covering the planchet increases self-absorption in samples containing low-energy alpha and beta activities. This may result in an under estimation of the sample activity.

5. Collection and Storage of Samples

5.1. There are no special collection and storage requirements.

6. Apparatus

6.1. Low-level alpha/beta planchet counting instrument, Protean Instrument Corporation Model IPC 9025, run in a windowless mode. The system also integrates a 50-sample automatic sample changer within its mechanical structure.

6.2. P-10 (argon/methane) gas cylinder, 2000 psi.

6.3. Planchets: stainless steel, 2.0- × 0.25-in., Model No. 129-021, Atomic Products Corp., Shirley, New York.

6.4. Mylar sheet: 0.00025 in. thick.

6.5. Photo mount spray adhesive: Scotch brand, catalog no. 6094.

6.6. Plastic weight boats: 2- × 2-in. and 4- × 4-in.

6.7. Infrared heating lamps: dual lamp assembly, Fischer.

6.8. Plastic jig holder and ring for attachment of Mylar surface film to the sample planchet.

6.9. Mortar and pestle.

7. Reagents

7.1. No reagents are used in this technique.

8. Calibration and Standards

8.1. Determine the ionization plateau for both alpha and beta energies. This process should be completed during the initial system setup, or when the P-10 gas cylinder is changed. This step is critical for the proper and accurate operation of the instrument.

8.1.1. Use the plated sources that are kept with the instrument. The alpha source is a plated ^{239}Pu stainless steel 0.5-in. plate, while the beta source is a ^{137}Cs plated source.

8.1.2. Load the alpha source in the sample holder. Start the calibration routine by depressing the **CAL** button on the console.

8.1.2.1. This will access the submenus under this function, Calibration Selection Determination. Use the arrow keys to mark the **DETECTOR VOLTAGE DETERMINATION** function.

8.1.2.2. Depress the **ENTER** key to start the process. Pick the **ACQUIRE PLATEAU DATA** function. This process is automatic, and will step the counter through a series of voltages (30-V increments from 500 to 1800 V). A printout will be generated that shows the counts versus the voltage applied, along with a value of percent counts per voltage step. The plateau should be set at a point 10% beyond the knee of the ionization plateau. The percent counts per voltage step provides the user with additional information for accurate determination of the ionization plateau. For more information, refer to the IPC instrument manual.

8.1.3. Using the beta source, repeat the above process for the beta plateau determination.

8.2. Generate detector efficiencies for the determination of alpha and beta activities in the silicate sample, using a NIST traceable IPL ^{241}Am standard and a NIST SRM 4233-B ^{137}Cs solution.

8.2.1. Prepare a series of standards (3 sets of activity levels, 100, 500, and 1000 dis/min, in duplicate using 1-g soil matrix blanks) that will give a wide range of activity levels for both the alpha and beta components. This will provide statistically significant data points.

8.2.2. Generate a mean value of counts for each of the duplicate sets, for both alpha and beta activities. Determine the efficiency of each set by dividing the count rate (counts/min) by the known activity added to each standard. Examine the data sets for nonlinearity between the different levels. The generated efficiency values should not be significantly different between the sets.

8.2.3. Enter these values into the instrument's calibration file. The menu will ask for the efficiency value and the associated error for these data points. Most gross alpha/beta systems use precipitation curves to derive the efficiency values, but this type of analysis is different. Because the mass of the sample remains constant, only one efficiency point is needed. The menu also requires information on the alpha/beta crosstalk factors. This information will be present on the hardcopy output from the standard runs.

8.3. Determine and track the instrument performance assessment parameters using a ^{239}Pu and a ^{137}Cs point source, a soil blank, and a blank planchet.

8.3.1. Load the samples into the sample holder tubes in the order described in Step 8.3.

8.3.2. Start the calibration by depressing the **CAL** button on the instrument panel.

8.3.2.1. This will bring up the submenu **CONTROL CHART ROUTINES**. Initiate this submenu to bring up the choices: PU-239 STANDARD, CS-137 STANDARD, SOIL BLANK, BLANK PLANCHET, AUTO SEQUENCE ALL. Pick the **AUTO SEQUENCE ALL** function. This will run all the samples for instrument performance assessment routine.

8.3.3. After counting is completed for each sample, the system will notify the user if the sample counts are within acceptable limits. If other messages appear, such as the system is out of limits, notify the Radiological Analysis Van manager. The system should also provide a hard copy of the latest sample counts and a chart displaying the trend in the data.

This information should be signed and appended to the alpha/beta notebook.

8.3.4. For more information concerning any of the above procedures, consult the Protean IPC Instrument Manual, Section 7.

9. Procedure

9.1 Silicates.

9.1.1. Obtain the sample aliquot from the cooler holding the samples.

9.1.2. Remove approximately 1.5 g of soil from the sample bag and place in a 4- × 4-in. plastic weigh boat.

9.1.3. Place the sample (in the weigh boat) under a heat lamp to remove any excess moisture that may remain. Dry until the soil seems friable.

9.1.4 If the sample consists of large chunks of soil and aggregate, place it in the mortar and pulverize it until the soil particles are a uniform size.

9.1.5. Write the sample number on the bottom of the planchet.

9.1.6. Spray a light film of photo mount adhesive on the inside of the planchet for the soil to adhere to.

9.1.7. Weigh 1.0 g (±0.05g) of soil in the small (2- × 2-in.) weigh boat.

9.1.8. Transfer the 1.0 g of soil to the prepared planchet. Spread the soil around within the planchet to disperse it evenly in the sample container.

9.1.9. Let the adhesive dry for 1-2 min before covering the sample.

9.1.10. Obtain a 3.0-in. circle of 0.00025-in. Mylar to adhere to the top of the sample planchet.

9.1.11. Place the prepared planchet on the plastic sample holder jig. Center the mylar circle on the sample planchet. There should be some adhesive remaining on the rim of the planchet for the Mylar to attach to. If not, apply some glue stick around the rim.

9.1.12. Move the plastic centering tool down over the planchet to affix the sides of the mylar sheet to the planchet. This should provide adequate adhesion of the mylar to the planchet. The sample is now ready to count.

10. Operation of the Instrument

10.1. Loading the proportional counter.

10.1.1. Place the QC samples in the sample holder assemblies. The QC samples (9 alpha and 6 beta QC's), made from various activity levels of ^{241}Am and ^{137}Cs on soils, should equal approximately 10% of the total number of samples to be analyzed. These samples should be interspersed in the sample set to adequately characterize the samples. The exact QC sample used does not matter, as long as the appropriate information is logged on the sample sheet so that the activity of that QC can be examined later.

10.1.2. Load the samples and QCs in their sample holder assemblies, using the sample loading tool provided by Protean. Place the sample holding tube on this loading tool and then place the sample holder assemblies in the tube. After all the samples have been loaded, lift the sample holding tube off the loading tool.

10.1.3. Load the holding tube on the tube receiver closest to the operator. When loading the tube within this assembly, be careful not to jar the holding tube. Excess motion will cause the sample assemblies to fall out of the holding tube inside the instrument. If this occurs, see the Mobile Radiological Analysis Van manager.

10.1.4. Record the sample position, number, type, and weight, along with other associated information on the alpha/beta sample sheet (Fig. 1).

10.2. Sample counting.

10.2.1. Sign onto the Protean instrument with the appropriate user password. This will bring up the initial software layout.

10.2.2. Depress the **COUNT** key.

10.2.2.1. This will bring up the **Acquisition Selection Menu**. Select the **Menu Selected Batch** mode. This selection is used for general counting of samples for routine gross alpha/beta counting. This will bring up one selection only, **RADVAN*GROSS/A/B**.

10.2.3. This selection will lead into the following sequence:

10.2.3.1. **Preparing Sample Changer**

10.2.3.2. **Load Magazine 1 and Press ENTER**

10.2.4. After loading the sample tube holder, depress the **ENTER** key. This will give a **Clearing Sample Buffer** message, followed by display of a field of data that the user can examine and change, if necessary. At this point, the user can either use the default values in the block or define the specific information needed for the system. Since this procedure is using an efficiency based on one point, there is no need to elaborate on the information within the block. To use the default information, press the **ENTER** key. This will initiate the next sequence:

10.2.4.1. **Accessing Sample Number 01**

10.2.4.2. **Low Gas Flow** to **Good Gas Flow**

10.2.4.3. **Good Gas Flow, Purging Detector, Seconds Remaining XXX**

10.2.5. The system has begun to count the samples and will print out the first data after the sample count has completed.

11. Calculations

11.1. Since the efficiency factor is calculated within the software of the Protean Instrument, the external algorithm simply converts the activity from disintegrations per minute to pCi, per sample units. In this case, the sample unit is gram per sample, so the activity is expressed as pCi/g.

11.1.1. This conversion uses the following algorithm:

$$\left(\frac{SA}{2.22}\right) = \text{pCi/sample} \quad ,$$

where SA = sample activity in dis/min,
2.22 = conversion unit to Ci.
(In this case, the sample = 1 g, so the sample activity = pCi/g)

11.2. The Protean Instrument provides a report (Fig. 2). The data is transferred from the report to the alpha/beta sample sheet. The raw data is attached to this alpha/beta sample sheet, initialed, and stored in the alpha/beta sample analysis notebook.

11.3. The information from the alpha/beta sample sheet is entered into a "basic" program that will provide the final data analysis. The program is accessed by the following steps:

11.3.1. Unlock the keyboard on the Mobile Radiological Analysis Laboratory (MRAL) computer.

11.3.2. Type **RAD** to initiate the program.

11.3.3. The program will query the user for the number of samples to be run, the type of analysis that is requested, and sample activity (in dis/min) and associated uncertainty.

11.3.4. Type in the appropriate information as the program requests it. After one sample has been completed, the result and uncertainty will be displayed on the screen. A secondary file is also created that provides another hard copy of the same information. This file is called **ALPHA.DAT**, within the DOS file structure. This file can be printed using the standard print utility from the DOS level.

11.3.5. The information can then be transferred to the MRAL database for the final data report and archiving.

12. Proper Waste Disposal Practices

12.1. Solid waste.

12.1.1. Sample-contaminated waste.

12.1.1.1. Sample-contaminated waste includes plastic weigh boats, spatulas, used planchets, Mylar, syringes, centrifuge tubes, filter disks, and gloves. The waste is accumulated in a plastic bag on a daily basis, sealed, and placed within a 1- × 2- × 2-ft cardboard box kept within the van.

12.1.1.2. The box is labeled as compactible waste. The box is opened only for the period of time necessary to add waste.

12.1.1.3. When the box is full, it is sealed with tape, removed from the mobile lab, and returned to TA-59. A new box is prepared (tape the end of the box and line with a new plastic bag) and placed in the mobile lab.

12.1.1.4. The box is stored at TA-59 until the remainder of the analytical results characterizing the waste are obtained.

12.1.1.5. Once the above process is complete, the Waste Disposal Group (EM-7) is notified and waste disposal procedure is initiated.

12.1.2. Sample waste.

12.1.2.1. The sample waste is the sample after the counting process has been completed. This includes the 100-g sample from the NaI(Tl) counter, the 1-g sample from the gross alpha/beta instrument, the 15 g from the extraction for tritium analysis, and the 5-g sample for the soil moisture analysis.

12.1.2.2. The waste is accumulated on a daily basis and placed within a smaller bag. This bag is then sealed and appropriately marked with the date the waste was accumulated and the sample range within the bag (this is for later sample retrieval, if necessary).

12.1.2.3. The box is labeled as compactible waste. The box is opened only for the period of time necessary to add waste.

12.1.2.4. When the box is full, it is sealed with tape, removed from the mobile lab, and returned to TA-59. A new box is prepared (tape the end of the box and line with a new plastic bag) and placed in the mobile lab.

12.1.2.5. The box is stored at TA-59 until the remainder of the analytical results characterizing the waste are obtained.

12.1.2.6. Once the above process is complete, the Waste Disposal Group (EM-7) is notified and waste disposal procedure is initiated.

12.2. Liquid waste.

12.2.1. Liquid waste is generated from the process of liquid scintillation analysis. After the samples have been counted, the samples are returned to EM-9 at TA-59, and accumulated with the routine tritium analysis sample vials.

12.3. Waste pickup.

12.3.1. The surface exposure rate of the sealed box is determined by a radiation protection technician and is recorded on the Radioactive Solid Waste Disposal (RSWD) Record form.

12.3.2. Pickup by the Waste Management group of the full boxes of waste is requested using the current Chemical Waste Disposal Request (CWDR) form. The current Waste Profile form

(WPRF) that describes the waste is referenced on both disposal request forms.

12.3.3. The Waste Management Group picks up the waste for disposal according to Laboratory policy.

13. Source Materials

13.1. Instruction Manual for the IPC 9025 Low Level Alpha/Beta Counting Instrument, IPC-9025-1.1, Protean Instrument Corporation, P.O. Box 910, Oak Ridge, TN (1991).

13.2. Environmental Protection Agency, "Tentative Reference Method for the Measurement of Gross Alpha and Gross Beta Radioactivities in Environmental Waters," Quality Assurance Branch, Technical Support Laboratory, National Environmental Research Center, Las Vegas, NV, ROAP Number 22 ACW, EPA-680/4-75-005 (1975).

13.3. EML Procedures Manual, 26th ed., H. L. Volchock and G. de Planque, Eds., Environmental Measurements Laboratory, U.S. Department of Energy, New York, NY, HASL-300 (1986).

13.4. G. Brooks, "Data Reduction Program for the MRAL," in progress, Environmental Chemistry Group, Los Alamos National Laboratory (1992).

13.5. "Low-Level Radioactive Solid Waste," Administrative Requirement 10-2, in *Environment, Safety, and Health Manual*, Los Alamos National Laboratory Manual, Chapter 1 (most recent edition).

13.6. "Chemical, Hazardous, and Mixed Waste," Administrative Requirement 10-3, in *Environment, Safety, and Health Manual*, Los Alamos National Laboratory Manual, Chapter 1 (most recent edition).

EM-9 Gross Alpha/Beta Sample Sheet

Date:_____ Analyst:_____

RN:_____

Pos	Samp Num	Analysis	Result	Unc.
		Alpha		
		Beta		
		Alpha		
		Beta		
		Alpha		
		Beta		
		Alpha		
		Beta		
		Alpha		
		Beta		
		Alpha		
		Beta		

Figure 1.

RADVAN*GROSS/A/B MOBILE-RAD-VAN B. LOCKHART α 3124.2 ± 790.8

ID: 00000000 07-27-92 11:41:44 α QC 1-1 β LMDA

Net Wt mg: 1.00 sd: 0.00

: 001 Repeat: 00 BG TIME (min): 5.00 SAMPLE TIME (min): 5.00

pha to Beta cpm: 60.05 sd: 5.28

	COUNTS	CPM	BG CPM	NET CPM	%EFF	DPM	LLD dpm
A	561	112.20	1.00	111.20	1.60	6935.70	129.78
sd	23.69	4.74	0.47	4.76	0.40	1753.64	
B	215	43.00	14.60	-31.65	18.60	-170.15	42.75
sd	14.66	2.93	2.48	6.53	2.50	41.91	

RADVAN*GROSS/A/B MOBILE-RAD-VAN B. LOCKHART α 123.6 ± 44.5

ID: 00000000 07-27-92 11:48:45 β std #6 β 2592.3 ± 350.3

Net Wt mg: 1.00 sd: 0.00

SN: 002 Repeat: 00 BG TIME (min): 5.00 SAMPLE TIME (min): 5.00

Alpha to Beta cpm: 2.38 sd: 0.64

	COUNTS	CPM	BG CPM	NET CPM	%EFF	DPM	LLD dpm
A	27	5.40	1.00	4.40	1.60	274.43	129.78
sd	5.20	1.04	0.47	1.14	0.40	98.76	
B	5437	1087.40	14.60	1070.42	18.60	5754.97	42.75
sd	73.74	14.75	2.48	14.97	2.50	777.69	

RADVAN*GROSS/A/B MOBILE-RAD-VAN B. LOCKHART

ID: 00000000 07-27-92 12:12:13 1317 LMDA

Net Wt mg: 1.00 sd: 0.00

: 001 Repeat: 00 BG TIME (min): 5.00 SAMPLE TIME (min): 5.00

pha to Beta cpm: 0.00 sd: 0.00

	COUNTS	CPM	BG CPM	NET CPM	%EFF	DPM	LLD dpm
A	2	0.40	1.00	-0.60	1.60	-37.42	129.78
sd	1.41	0.28	0.47	0.55	0.40	35.54	
B	64	12.80	14.60	-1.80	18.60	-9.68	42.75
sd	8.00	1.60	2.48	2.95	2.50	15.93	

RADVAN*GROSS/A/B MOBILE-RAD-VAN B. LOCKHART

ID: 00000000 07-27-92 12:19:15 1318 LMDA

Net Wt mg: 1.00 sd: 0.00

SN: 002 Repeat: 00 BG TIME (min): 5.00 SAMPLE TIME (min): 5.00

Alpha to Beta cpm: 0.00 sd: 0.00

	COUNTS	CPM	BG CPM	NET CPM	%EFF	DPM	LLD dpm
A	1	0.20	1.00	-0.80	1.60	-49.90	129.78
sd	1.00	0.20	0.47	0.51	0.40	34.28	
B	28	5.60	14.60	-9.00	18.60	-48.39	42.75
sd	5.29	1.06	2.48	2.70	2.50	15.90	

RADVAN*GROSS/A/B MOBILE-RAD-VAN B. LOCKHART

ID: 00000000 07-27-92 12:26:18 1319 LMDA

Net Wt mg: 1.00 sd: 0.00

SN: 003 Repeat: 00 BG TIME (min): 5.00 SAMPLE TIME (min): 5.00

Alpha to Beta cpm: 0.00 sd: 0.00

	COUNTS	CPM	BG CPM	NET CPM	%EFF	DPM	LLD dpm
A	2	0.40	1.00	-0.60	1.60	-37.42	129.78
sd	1.41	0.28	0.47	0.55	0.40	35.54	
B	53	10.60	14.60	[illegible]	18.60	[illegible]	[illegible]

Figure 2. Example of Report from Protean Instrument

GROSS GAMMA SCREENING OF SILICATES IN A MOBILE RADIOLOGICAL LABORATORY

Analyte: All gamma-emitting nuclides	**Method No.:** MLR200
Matrix: Silicates	**Minimum Detectable Activity:** Silicates: 4.0 pCi/g
Procedure: Instrumental gamma-ray (NaI) counting	**Accuracy and Precision:** Soils: 97.7 ± 3.0 %
Effective Date: 05/12/92	**Author:** George Brooks

SAFETY NOTE: Before beginning this procedure, read all of the Material Safety Data Sheets for the chemicals listed in Sec. 7. Read Sec. 4.3 of the EM-9 Safety Manual for information on personal protective clothing and equipment. Read Sec. 13 of this procedure and Source Material 14.4 and 14.5 for proper waste disposal practices.

1. Principle of Method

1.1. Samples are packaged in 500-mL (16-oz) Nalgene HDPE plastic bottles and are counted in a NaI(Tl) well scintillation counting system for 5 min. This procedure is completed without chemical processing.

1.2. The sample size for silicates is 100 g.

2. Sensitivity

2.1. The limits of detection for silicates in this system is 4.0 pCi/g, based on the 662-keV ^{137}Cs energy line and a 5-min count.

3. Accuracy and Precision

3.1. This method is intended as a qualitative assessment of gross gamma activity. The accuracy and precision have been assessed using ^{137}Cs (NIST SRM 4233B) quality assurance samples. The following represents the accuracy and precision of the NaI(Tl) counting system used to count these samples:

Silicate Samples:
Gamma = 97.7 ± 3.0 % (N = 86)

3.2. Samples showing a positive response (usually 3 sigma above background is indicative of a positive signal) should be submitted to further analysis to determine the exact source of the elevated activity.

4. Interferences

4.1. Although the method is intended to measure the gamma-emitting isotopes in the sample, the wall thickness of the detector and the detector housing assembly is such that high-energy beta particles will also be counted.

5. Collection and Storage of Samples

5.1. There are no special collection and storage requirements for these types of samples.

6. Apparatus

6.1. Bicron Model No. 5MW7Q/5, 5- × 7-in. NaI(Tl) well-type scintillation detector. The well dimensions are 3.0 in. diameter by 5.5 in. depth. The system is set in the "NORMAL" window mode, with an active energy range of 0.2 to 2.5 MeV.

6.2. Photomultiplier tube base with preamplifier: EG&G Ortec Model 276.

6.3. Amplifier: EG&G Ortec Model No. 572 amplifier.

6.4. Single-channel analyzer (SCA): EG&G Ortec Model No. 550A.

6.5. Counter/timer: EG&G Ortec Model 776 counter/timer.

6.6. Printer: EG&G Ortec Model No. 777A line printer.

6.7. High voltage power supply: EG&G Ortec Model No. 556.

6.8. Standard NIM rack assembly with ±12 and 24 V.

6.9. Bottles: 500-mL, HDPE polyethylene, Nalgene, catalog no. 20002-0116.

6.10. Analytical balance: 300-g minimum capacity.

6.11. Bags: clear, low-density, polyethylene bags (0.002 in. thick) sized to fit 500-mL bottles. The bags protect the detector from surface contamination on the bottles.

6.12. Spatula and permanent ink marker.

6.13 Funnel: polyethylene.

7. Reagents

7.1. No reagents are required for this procedure.

8. Calibration and Standards

8.1. Prepare all standards and quality assurance materials from a NBS SRM 4233-B ^{137}Cs solution.

8.1.2. Standards.

8.1.2.1. Prepare the soil standard by overspiking a known aliquot of the stock standard solution on 100 g of blank soil in the sample bottle and evaporating under an infrared heat lamp. The solution must not come in contact with the walls or bottom of the container when preparing the overspike.

8.1.2.2. Thoroughly blend the dry standard and cap the bottle. Additional mixing may be provided by gently shaking the sealed bottle.

8.1.2.3. Mark the bottle with the appropriate information: isotope, activity level, SRM used, date prepared, preparer, notebook number, etc. Mark the bottle with tape denoting that it is a radioactive material.

8.1.3. Quality Control Materials (open).

8.1.3.1. Prepare quality control (QC) materials in 3 activity levels. Repeat steps outlined in section 8.1.2.1 and 8.1.2.2. To create 3 levels of activity, adjust the amount of standard added to each soil blank.

8.1.3.2. Repeat Step 8.1.2.3.

8.1.4. Blank.

8.1.4.1. Prepare a blank soil sample by treating 100 g of dried, "clean" soil, as outlined in Step 8.1.2.2 and 8.1.2.3.

9. Procedure

9.1. Weigh 100 g of a dried soil sample into the 500-mL polyethylene bottle.

9.2. Tightly cap the bottle and clean off any exterior contamination.

9.3. Place the sample in a plastic bag.

9.4. Because the detector efficiency and background are to be determined for each run, triplicate standards and blanks should be counted with each sample set.

9.4.1. Place the standard in a plastic bag and insert it into the well counter.

9.4.2. Count the standard three times for 5 min each count. Multiple counting of the sample provides adequate counting statistics. Record each count on the NaI(Tl) Counting Log Sheet (see Fig. 1).

9.4.3. Remove the standard and insert the soil blank into the well. Count the blank soil three times for 5 min each count. Record each count on the log sheet.

9.5. Place the sample in the well counter.

9.6. Count the sample for 5 min.

9.7. Record the counts, sample number, weight of sample, date counted, and any other distinguishing information on the NaI(Tl) counting log sheet.

9.8. Count a quality-control sample at the end of each set. Count a number of QCs equal to 10% of the total number of samples that will be counted. Record this information on the sample counting log sheet.

10. Operation of the Instrument

10.1. Turn **on** the voltage to the NIM bin.

10.2. Turn on the high-voltage supply for the NaI(Tl) detector, usually at 1000 volts, positive. The readout on the HV supply will read **1.0**.

10.3 Check that the timer/counter is set properly. The thumbwheel for the timer should read **5 0**; the time increment is already set at 1.0 min intervals by a jumper inside the unit. The dwell time knob should be **off**, the timer/counter switch should be at **Count (A)**, and the discriminator potentiometer should be at **0.2 V**.

10.4. The line printer should be switched on, and the cycle switch should be at **ONE CYCLE**.

10.5. To initiate the counter, proceed with the following:

10.5.1. Depress the **STOP** button to complete any counting cycle that may be in progress.

10.5.2. Depress the **RESET** button to reset the counter to the first part of the counting cycle.

10.5.3. Depress the **COUNT** button to start the counting sequence.

10.6. After the count has been completed, the line printer will print the time of the count and the total counts for that sample. The display on the timer/counter will also display this information.

10.7. Record this information on the NaI(Tl) counting log sheet.

10.8. If any of the operations above produce suspicious results, or none at all, contact the Rad Van manager immediately.

11. Calculations

11.1. Since the efficiency factor is calculated for each sample set, the values obtained from counting the standard and blanks are used to determine the efficiency of the counting system for that sample set.

11.2. Determine the mean value of the triplicate counts of the standard and the soil blank. Record these values on the bottom of the counting log sheet.

11.3. The following equations are embedded within the BASIC program. This program provides the user with the vehicle by which all the final data reduction processes are accomplished. The actual steps to needed for the final data reduction process are discussed in Section 12, Data Reduction.

11.4 Counting efficiency.

11.4.1. The mean counting efficiency of the counter for a standard run is calculated using the following equation:

$$\overline{E} = \frac{\left(\frac{\overline{C_s}}{T_s} - \overline{B}\right)}{A_s} ,$$

where $\overline{E}$ = mean efficiency,
$\overline{C_s}$ = mean (n = 3) gross counts of the standard,
T_s = count time for the standard (min),
$\overline{B}$ = mean background count rate (counts/min), and
A_s = activity of the standard (dis/min).

11.5. Background.

11.5.1. The mean background count rate is calculated as follows:

$$\overline{B} = \frac{C_B}{T_B} \quad ,$$

where B = mean background count rate (counts/min),
C_b = mean gross counts of the soil background, and
T_s = count time of the soil background (min).

11.6. Sample activity.

11.6.1. The activity of the samples is calculated using the following formula:

$$A_X = \left(\frac{\left(\frac{C_X}{T_X} - \overline{B} \right)}{\overline{E}} \right) \times 2.22 \quad ,$$

where A_x = sample activity,
C_x = gross counts of the sample,
T_x = count time of the sample (min),
$\overline{B}$ = mean background count rate (counts/min),
$\overline{E}$ = mean efficiency, and
2.22 = conversion factor.

11.7. Sample uncertainty.

11.7.1. The uncertainty associated with the sample activity is calculated using the following equation:

$$SD\ (A_x) = |A_x| \times \sqrt{\frac{\frac{C_x}{T_x^2}}{\left(\frac{C_x}{T_x} - \overline{B} \right)^2}} \quad ,$$

where $SD\ (A_x)$ = uncertainty of the sample activity in pCi,
$|A_X|$ = absolute value of A_x from Step 11.5.1,
C_x = gross counts of the sample,
T_x = sample count time (min), and
$\overline{B}$ = background count rate (counts/min).

12. Data Reduction

12.1. The raw data logged into the NaI(Tl) counting log sheet is now ready to be entered into the system for the final data reduction process. The program is accessed by the following steps:

12.1.1. Unlock the keyboard of the MRAL computer.

12.1.2. Type **RAD** to initiate the program.

12.1.3. The program will query the user for the number of samples to be run, the type of analysis requested, the mean gross counts for the standard, the mean gross counts for the sample blank, and then the gross counts associated with the sample itself.

12.1.4. Type in the appropriate information as the program requests it. After the first sample result has been calculated, the result and uncertainty will be displayed on the screen. A secondary ASCII file is created that can provide a hardcopy of the data, or the data can be uploaded directly into EM-9's database. This file is called **GAMMA.DAT**, within the DOS file structure. This file can be printed using the standard print utility from the DOS level.

12.1.5. The information is then transferred to the MRAL database for final data reporting and archiving.

12.1.6. The final report is signed and dated by the analyst and then placed in the **GROSS GAMMA** logbook. Copies are sent with the aliquoted samples to provide the necessary radiological screening information requested by the sample receiving section.

12.1.7. The final data must then be transferred into the EM-9 database for final data storage and record archiving.

13. Proper Waste Disposal Practices

13.1. Solid waste.

13.1.1. Sample-contaminated waste.

13.1.1.1. Sample-contaminated waste includes plastic weigh boats, spatulas, used planchets, Mylar, syringes, centrifuge tubes, filter disks, and gloves. The waste is accumulated in a plastic bag on a daily basis, sealed, and placed within a 1- × 2- × 2-ft cardboard box kept within the van.

13.1.1.2. The box is labeled as compactible waste. The box is opened only for the period of time necessary to add waste.

13.1.1.3. When the box is full, it is sealed with tape, removed from the mobile lab, and returned to TA-59. A new box is prepared (tape the end of the box and line with a new plastic bag) and placed in the mobile lab.

13.1.1.4. The box is stored at TA-59 until the remainder of the analytical results characterizing the waste are obtained.

13.1.1.5. Once the above process is complete, the Waste Disposal Group (EM-7) is notified and waste disposal procedure is initiated.

13.1.2. Sample waste.

13.1.2.1. The sample waste is the sample after the counting process has been completed. This includes the 100-g sample from the NaI(Tl) counter, the 1-g sample from the gross alpha/beta instrument, the 15 g from the extraction for tritium analysis, and the 5-g sample for the soil moisture analysis.

13.1.2.2. The waste is accumulated on a daily basis and placed within a smaller bag. This bag is then sealed and appropriately marked with the date the waste was accumulated and the sample range within the bag (this is for later sample retrieval, if necessary).

13.1.2.3. The box is labeled as compactible waste. The box is opened only for the period of time necessary to add waste.

13.1.2.4. When the box is full, it is sealed with tape, removed from the mobile lab, and returned to TA-59. A new box is prepared (tape the end of the box and line with a new plastic bag) and placed in the mobile lab.

13.1.2.5. The box is stored at TA-59 until the remainder of the analytical results characterizing the waste are obtained.

13.1.2.6. Once the above process is complete, the Waste Disposal Group (EM-7) is notified and waste disposal procedure is initiated.

13.2. Liquid waste.

13.2.1. Liquid waste is generated from the process of liquid scintillation analysis. After the samples have been counted, the samples are returned to EM-9 at TA-59, and accumulated with the routine tritium analysis sample vials.

13.3. Waste pickup.

13.3.1. The surface exposure rate of the sealed box is determined by a radiation protection technician and is recorded on the Radioactive Solid Waste Disposal (RSWD) Record form.

13.3.2. Pickup by the Waste Management group of the full boxes of waste is requested using the current Chemical Waste Disposal Request (CWDR) form. The current Waste Profile form (WPRF) that describes the waste is referenced on both disposal request forms.

13.3.3. The Waste Management Group picks up the waste for disposal according to Laboratory policy.

14. Source Materials

14.1. Procedure no. ER150, "Gross Gamma in Environmental Matrices," *Health and Environmental Chemistry: Analytical Techniques, Data Management, and Quality Assurance*, M. A. Gautier, Ed., Los Alamos National Laboratory Manual LA-10300-M, Vol. I (1987).

14.2. EML Procedures Manual, 26th ed., H.L. Volchock and G. de Planque, Eds., Environmental Measurements Laboratory, U.S. Department of Energy, New York, HASL-300 (1986).

14.3. G. Brooks, "Data Reduction Program for the MRAL," in progress, Environmental Chemistry Group, EM-9, Los Alamos National Laboratory, (1992).

14.4. "Low-Level Radioactive Solid Waste," Administrative Requirement 10-2, in *Environment, Safety, and Health Manual*, Los Alamos National Laboratory Manual, Chapter 1 (most recent edition).

14.5. "Chemical, Hazardous, and Mixed Waste," Administrative Requirement 10-3, in *Environment, Safety, and Health Manual*, Los Alamos National Laboratory Manual, Chapter 1 (most recent edition).

NaI(TI) Counting Log Sheet

Sample Set: TA-21 (Rad Tech)
Count Time: 5 min
ROI's:
Sample Owner:
Date: 7/30/92

Sample	Vol/Wt	Counts	D/M	Comments
Soil Blk		35803		
"		35822	35725	
"		35551		
Std#2		155808		
		156094	155702	
		155203		
1399		34761		LMDA
1400		35054		"
1401		35115		"
1402		35113		"
1403		34957		"
1404		35260		"
1405		35519		"
1406		35310		"
1408		35681		"
1409		35434		"
1410		38413		LMDA 9.1 ± 0.5
1413		37985		5.8 ± 0.4
Soil Blk		38893		
		38743		
		37888		
1414		35604		LMDA
1415		36125		"
1416		36253		"
1417		35377		"
1418		35676		"
1419		35622		"
1420		35884		"

Figure 1. Gross Gamma Log Sheet

GROSS TRITIUM ANALYSIS OF SILICATES IN A MOBILE RADIOLOGICAL LABORATORY

Analyte: Tritium (^3H)	**Method No.:** MLR300
Matrix: Silicates	**Minimum Detectable Activity:** Silicates: 1.0 pCi/g
Procedure: Liquid scintillation analysis	**Accuracy and Precision:** Silicates: 93 ± 16%
Effective Date: 06/22/92	**Author:** George Brooks

SAFETY NOTE: Before beginning this procedure, read all of the Material Safety Data Sheets for the chemicals listed in Sec. 7. Read Sec. 4.3 of the EM-9 Safety Manual for information on personal protective clothing and equipment. Read Sec. 12 of this procedure and Source Material 13.4 and 13.5 for proper waste disposal practices

1.Principle of Method

1.1. Silicate samples are mixed with 15 mL of deionized water. The sample is shaken, a 5-mL aliquot of the sample extract is taken, immersed in a liquid scintillation cocktail, and counted.

1.2. The silicate sample extracts are counted in a low-level liquid scintillation counting system for 5 min. The sample size is 15 g of soil.

2. Sensitivity

2.1. The sensitivity will vary as a result of color quenching that may be taking place within the sample. This is a direct result of the inefficiency of the filter to exclude the media causing the quenching. The sensitivity may also be limited by the range of the counter background. In general, the detection limit for this system is approximately 1.0 pCi/g, based on a 15-g soil sample, a 2-minute shakeout, spin-out in a centrifuge (until sample is clear), and immersion in 15 mL of Ultima Gold liquid scintillation cocktail.

3. Accuracy and Precision

3.1. This method is intended as a preliminary step in the analysis of silicates samples submitted to a field laboratory. It does not supersede fixed-base laboratory distillation methods.

3.2. The following accuracy and precision measurements were derived from soil overspikes using two NIST ^3H SRMs, No. 4361B-57 and No. 4926D-51:

Silicate samples: Tritium = 93.0 ± 16.0% (N = 12)

4. Interferences

4.1. Any sample that contains some form of chemical quenching agent that can be carried through filtration will experience count quench.

4.2. Other nuclides with low-energy beta emission similar to ^{3}H can cause false positive results.

4.3. It must be assumed that the sample contains ^{3}H in the form of HTO and that all the unbound fraction of ^{3}H has been extracted.

5. Collection and Storage of Samples

5.1. There are no special collection and storage requirements for these types of samples.

6. Apparatus

6.1. Low-level liquid scintillation counting system: Packard Instrument Corporation Model 2500 TR with refrigeration option.

6.2. Liquid scintillation vials: Wheaton model no. 66021-690, 25-mL capacity, plastic.

6.3. 50-mL centrifuge tube: clear polypropylene, Corning model no. 21008-74.

6.4. Syringe: 10 cc, model no. BD-1604.

6.5 Filter disk: 5-μm, Gelman Acrodisc model no. 28144-095.

6.6. Safety bottle: 4-liter, plastic coated with 15-mL automatic pipette dispenser.

6.7. Automatic 15-mL pipette dispenser: to fit the liquid scintillation cocktail bottle.

6.8. Analytical balance: 300-g minimum capacity.

6.9. Pipette: 100-1000-μL Eppendorf micropipette.

6.10. Pipette: 5-mL adjustable macropipette.

6.11. Pipette tips: 101-1000-μL Eppendorf pipette tips, model no. 53511-880.

6.12. Pipette tips: 1-5-mL polypropylene, model no. 53503-826.

6.13. Spatula and permanent ink marker.

6.14. Funnel: polypropylene.

7. Reagents

7.1. Liquid scintillation cocktail: Ultima Gold (Packard Instrument Company Inc., Catalog No. 6013324, VWR Scientific) or similar commercial product. Evaluate each new lot number to assure reproducibility of results.

7.2. Low-background water: obtain from a water source free of radionuclide contamination (deep well water from well no. PM-1 can be obtained from EM-8).

8. Calibration and Standards

8.1. Quench curves.

8.1.1. In order to properly characterize and quantitate a sample, a quench curve must be established. This curve provides information (efficiency versus quench within the sample, expressed as some variable specific to the instrument; i.e., tSIE factor for Packard) to the instrument that can accurately correct for quench occurring in the samples due to chemical or color quench. This quench curve then must represent as closely as possible the actual samples that are analyzed. This requires that each quench curve must be specific to the sample to be counted: (1) the sample-to-cocktail ratio (i.e., 5 mL of sample to 15 mL of cocktail), (2) the specific manufacturer of the cocktail, and (3) the specific matrix that is to be analyzed (soil, water, etc.).

8.1.1.1. Generate a set of quench standards. Place 15 mL of the Ultima Gold cocktail in each of 10 liquid scintillation vials. Mark the top of each vial with a permanent marker for identification. Record this information in the appropriate notebook.

8.1.1.2. Obtain a ^{3}H (NIST SRM 4926D) standard having a suitable activity level (100,000 dis/min per vial is adequate). A volume of 700 μL in each vial provides an activity level close to the 100,000 dis/min in each sample.

8.1.1.3. Make a solution that can provide adequate quench in the samples. Mix 5 mL of NaI in 40 mL of deionized water. Shake the solution until all the salt has dissolved.

8.1.1.4. The purpose is to provide a series of samples with the same amount of standard in each sample while varying the amount of quench agent. This requires 10 separate and varied additions of these quench standards. The following quench amounts are adequate with the above-mentioned sample configurations: 0, 10, 50, 100, 250, 500, 800, 1000, 2000, and 3500 μL.

8.1.1.5. The samples must now be normalized to the total 20-mL sample volume. This requires the addition of the following amounts of "clean" deionized water to each of the samples, respectively: 4300, 4290, 4250, 4200, 4050, 3800, 3500, 3300, 2300, and 800 μL.

8.1.1.6. After all additions to each sample are complete, shake each sample vigorously to mix. At first the sample will appear cloudy, but it should become clear.

8.1.1.7. Place the quench standards into the sample holder trays in the liquid scintillation analyzer. Allow the samples to cool for at least 20-30 min before counting.

8.1.1.8. Set up the protocol number that will be used to count the quench standards. The protocol number allows the user to define the count times, the name of the protocol, the exact range to be analyzed, etc. For more information on setting up the appropriate quench curve information, see chapter 7 in the operations manual for the Packard 2500 TR.

8.1.1.9. After the samples have been counted, the program processes the information and produces a quench curve. In some instances, the curve is not curvilinear because of irregularities in some of the quench standards. This requires that some of the standards (counts) be removed from the protocol information file (see chapter 7 in the 2500 TR operations manual). The program will replot the standards with the new data configuration. The data should provide a plot such as Fig. 1.

8.1.1.10. This file is then addressed in other counting protocols as the quench curve to use for this particular sample configuration.

8.1.1.11. The quench curves should be regenerated every year to compensate for system degradation, new batches of liquid scintillation cocktail, or other conditions that could alter the counting process.

8.2. Open quality assurance standards.

8.2.1. In order to provide high-quality data, appropriate quality control (QC) materials should be run with each sample set. This provides the analyst and the end user with a high degree of confidence in the data. Two types of quality control samples can be run through the system, soil overspike QCs and system QCs.

8.2.1.1. Soil overspike QCs.

8.2.1.1.1. Place 15 g of "clean" soil in the 50-mL centrifuge tube.

8.2.1.1.2. Add a known amount of tracer to the sample matrix. Use either NIST SRM 4361B or 4926D as the QC material. Calculate the amount of activity that should be in the sample.

8.2.1.1.3. Add 15 mL of "clean" water to the sample and overspike matrix. Cover the sample.

8.2.1.1.4. Shake the sample for 2 min.

8.2.1.1.5. Let the sample stand for 2-4 min to allow the water and soil to separate.

8.2.1.1.6. Attach a 5-μm filter to the end of a syringe. Immerse the end of the filter in the sample extract.

8.2.1.1.7. Pull 5 mL of solution through the filter into the syringe.

8.2.1.1.8. Remove the filter from the syringe and dispense the 5 mL of extract into 15 mL of liquid scintillation cocktail.

8.2.1.1.9. Shake the sample until it is no longer cloudy. Mark on the top of the sample container the amount of spike added to the soil sample. Use this as a reference number for this QC.

8.2.1.1.10. Count the QC sample with the other samples. Examine the data to determine the ratio of the measured to actual activity levels in the QC sample.

8.2.1.1.11. If the ratio is 80-120%, the data can accepted as valid. If the ratio is outside that range, contact the Mobile Radiological Analysis Laboratory (MRAL) manager to correct the problem.

8.2.2.1. System QCs.

8.2.2.1.1. Prepare 10 samples for quality assurance standards. Place 15 mL of Ultima Gold cocktail in each sample vial.

8.2.2.1.2. Add varying but known amounts of ^{3}H standard to each sample. Normalize each sample to a total volume of 20 mL (this may require that "clean" water be used to normalize the volume). Use NIST SRMs 4361B or 4926D. Try to develop a activity range between 100 and 3000 dis/min per sample.

8.2.2.1.3. Mark each sample with a unique number and record the number and its calculated activity in the appropriate notebook. This series will be used for long-term quality assurance for the sample sets.

8.2.2.1.4. Place the system QCs in a sample cassette and place in the instrument. Keep the samples in the instrument to maintain a constant temperature. This allows rapid determination of the sample activity with any sample set.

8.3. Weekly calibrations.

8.3.1. In order to maintain accurate instrument performance assessment records, known standards will be run through the system each week. These standards consist of a ^{14}C unquenched standard, a ^{3}H unquenched standard, and an unquenched background sample. These samples are loaded into a special sample cassette marked for IPA ASSESSMENT in the order mentioned. Various statistical parameters are examined (chi-square, figure of merit, standard efficiency, and backgrounds) and plotted within the instrument's software programs. This information should be examined weekly to determine if any trends are occurring in the instrument. If further information is needed, refer to chapter 10 in the 2500TR operations manual. If other problems are found, contact the MRAL manager immediately.

9. Procedure

9.1 Silicates.

9.1.1. Obtain the sample aliquot from the cooler holding the samples. This cooler is the sample holder the ER sampling team delivers to the MRAL van daily.

9.1.2. Determine the total number of samples to be analyzed for ^{3}H. Remove the appropriate number of liquid scintillation vials and centrifuge tubes.

9.1.3. Mark each scintillation vial and centrifuge tube with the correct sample number, using a permanent marker.

9.1.4. Place 15 mL of the Ultima Gold cocktail in each sample vial.

9.1.5. Weigh out 15 g of each sample in the appropriately marked centrifuge tube.

9.1.6. Add 15 mL of "clean" water to each sample. Use the 4-L bottle with the automated pipettor for the "clean" water.

9.1.7. Shake each sample for 2 min to allow for the transfer of unbound ^{3}H from the soil to the water carrier.

9.1.8. Allow each sample to stand for approximately 2-4 min. This should allow the sediments to separate from the water extract and minimize the amount of possible quench agent pulled through to the sample. If this does not provide a clear sample, centrifuge the tubes until the solution is no longer cloudy (2-20 min).

9.1.9. Place a 5-μm filter on the end of a 10-mL syringe.

9.1.10. Place the end of the filter in the 15 mL of water extract in the centrifuge tube. Pull 5 mL of sample through the filter into the syringe. The sample should be fairly clean. If not, flush the sample back into the centrifuge tube, replace the filter, and pull another sample.

9.1.11. Remove the filter from the syringe and place it in the appropriate disposal container.

9.1.12. Introduce the sample from the syringe into the appropriately marked liquid scintillation vial. Replace the top and secure the lid.

9.1.13. Shake the vial to promote homogeneity within the sample. The sample should change from cloudy to clear within a few seconds. If it remains

cloudy, the sample condition is inappropriate for counting and may need to be redone.

10. Operation of the Instrument

10.1. Preparation of samples for counting.

10.1.1. Place the samples in the sample cassette holders. Place the protocol ID marker, number 2, on the front of the sample cassette holder. Make sure that the magnetic bar on the protocol ID marker is pushed to the left position. This cues the instrument that this sample set is ready to be counted.

10.1.2. Make sure that the necessary number of QC samples (both soil overspikes and system QCs) are in place with the sample set. A 1:10 ratio of QCs to samples is reasonable.

10.1.3. Keep the samples within the instrument for at least 15-20 min to allow photoluminescence in the sample to subside.

10.2. Sample counting.

10.2.1. When the samples are ready to count, depress the **green** button on the upper right-hand corner of the system keyboard. This causes the system to rotate the cassette holders within the instrument to the next sample set ready to count.

10.2.2. After the counting sequence is complete, a printout will be available with all the appropriate information. This will include the sequence number, count time, count per minute, disintegrations per minute, activity and the associated error (3σ), and the tSIE (transformed spectral index of external standard).

10.2.3. In addition to this printout, an ASCII file should be generated. The creation of the this file will allow the user to take the data from the MRAL to the laboratory and upload it into the EM-9 database for storage and archival purposes. For further information on the initial setup of the data file format, consult chapter 9, Data Output, in the 2500TR operation manual.

11. Calculations

11.1. The liquid scintillation analyzer performs the necessary calculations internally to derive the proper activity and standard error calculations for each sample and generate a report (Fig. 2). The reporting algorithm in the instrument CPU provides for the correction that only 1/3 of the original sample was extracted.

It corrects to the original sample size of 15 g and reports the activity in pCi/g, ±3 σ.

11.2. The operator of the MRAL then transcribes the data from the LSC report for inclusion in the MRAL report. This algorithm corrects for soil moisture as calculated from the soil moisture analyzer. The report is then printed for final dissemination to the Sample Receiving section, the contract laboratory, the ER program office, and in-house users.

11.3. The report is a file generated in a WordPerfect (WP) file format. The typical naming convention for each file utilizes the day's date as the file name; i.e., 6_25_92.WP. The user can retrieve the file from the WP directory later.

11.4. The computing system has the necessary hardware to allow archiving of all the systems' files. Data integrity is maintained by use of an automated backup routine in place on the system.

12. Proper Waste Disposal Practices

12.1. Solid waste.

12.1.1. Sample-contaminated waste.

12.1.1.1. Sample-contaminated waste includes plastic weigh boats, spatulas, used planchets, Mylar, syringes, centrifuge tubes, filter disks, and gloves. The waste is accumulated in a plastic bag on a daily basis, sealed, and placed within a 1- × 2- × 2-ft cardboard box kept within the van.

12.1.1.2. The box is labeled as compactible waste. The box is opened only for the period of time necessary to add waste.

12.1.1.3. When the box is full, it is sealed with tape, removed from the mobile lab, and returned to TA-59. A new box is prepared (tape the end of the box and line with a new plastic bag) and placed in the mobile lab.

12.1.1.4. The box is stored at TA-59 until the remainder of the analytical results characterizing the waste are obtained.

12.1.1.5. Once the above process is complete, the Waste Disposal Group (EM-7) is notified and waste disposal procedure is initiated.

12.1.2. Sample waste.

12.1.2.1. The sample waste is the sample after the counting process has been completed. This includes the 100-g sample from the NaI(Tl) counter, the 1-g sample from the gross alpha/beta instrument, the 15 g from the extraction for tritium analysis, and the 5-g sample for the soil moisture analysis.

12.1.2.2. The waste is accumulated on a daily basis and placed within a smaller bag. This bag is then sealed and appropriately marked with the date the waste was accumulated and the sample range within the bag (this is for later sample retrieval, if necessary).

12.1.2.3. The box is labeled as compactible waste. The box is opened only for the period of time necessary to add waste.

12.1.2.4. When the box is full, it is sealed with tape, removed from the mobile lab, and returned to TA-59. A new box is prepared (tape the end of the box and line with a new plastic bag) and placed in the mobile lab.

12.1.2.5. The box is stored at TA-59 until the remainder of the analytical results characterizing the waste are obtained.

12.1.2.6. Once the above process is complete, the Waste Disposal Group (EM-7) is notified and waste disposal procedure is initiated.

12.2. Liquid waste.

12.2.1. Liquid waste is generated from the process of liquid scintillation analysis. After the samples have been counted, the samples are returned to EM-9 at TA-59, and accumulated with the routine tritium analysis sample vials.

12.3. Waste pickup.

12.3.1. The surface exposure rate of the sealed box is determined by a radiation protection technician and is recorded on the Radioactive Solid Waste Disposal (RSWD) Record form.

12.3.2. Pickup by the Waste Management group of the full boxes of waste is requested using the current Chemical Waste Disposal Request (CWDR) form. The current Waste Profile form

(WPRF) that describes the waste is referenced on both disposal request forms.

12.3.3. The Waste Management Group picks up the waste for disposal according to Laboratory policy.

13. Source Materials

13.1. Operation Manual, Tri-Carb Liquid Scintillation Analyzer, Models 2500TR, 2550TR/LL, 2569TR/XL. Publication Number 169-4044, Rev. D. Packard Instrument Company, One State Street, Meriden, CT, 06450 (1990).

13.2. H. Ross, J. Noakes and J. D. Spaulding, Eds., *Liquid Scintillation Counting and Organic Scintillators*, Lewis Publishers, Inc., 121 South Main Street, Chelsea, MI, 48118 (1991).

13.3. Procedure no. R230, "Tritium (T_2O or TOH)-Direct Procedure," *Health and Environmental Chemistry: Analytical Techniques, Data Management, and Quality Assurance*, M. A. Gautier, Ed., Los Alamos National Laboratory Manual LA-10300-M, Vol. I (1989).

13.4. "Low-Level Radioactive Solid Waste," Administrative Requirement 10-2, in *Environment, Safety, and Health Manual*, Los Alamos National Laboratory Manual, Chapter 1 (most recent edition).

13.5. "Chemical, Hazardous, and Mixed Waste," Administrative Requirement 10-3, in *Environment, Safety, and Health Manual*, Los Alamos National Laboratory Manual, Chapter 1 (most recent edition).

Mode: DPM
ype: tSIE/AEC

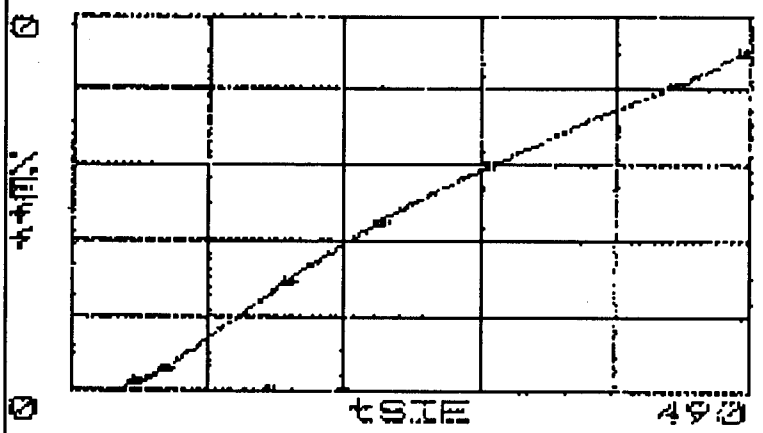

tSIE	%Eff
484.43	44.99
435.58	40.38
301.58	29.94
222.88	22.64
*194.92	7.50
155.79	14.72
*143.11	0.56
65.72	2.77
46.43	1.07

* indicates deleted point

Figure 1

Time: 5.00
Data Mode: DPM Nuclide: MRAL-H3 Quench Set: MRAL
Background Subtracts: None

	LL	UL	LCM	2SD	DKD
Region A:	0.0 -	18.8	0	0.0	0.00
Region B:	2.0 -	10.6	0	0.0	0.00
Region C:	0.0 -	0.0	0	0.0	0.00

Quench Indicator: tSIE/AEC
Ext Std Terminator: Count

Luminescence Correction Or
Color Quench Correction On
High Sensitivity Count Mode On

SH	TIME	CPMA	CPM1	[illegible]	SSIE UNC	tSIE	FLAG
1	5.00	4.20	8.47	0.25	13615.00	530.50	C
2	5.00	19.20	38.79	1.16	-24062.00	535.42	E
3	5.00	15.80	36.29	1.09	-4133.00	473.02	
4	5.00	15.00	37.95	1.14	8285.00	477.79	
5	5.00	17.60	36.63	1.10	-26697.00	432.28	
6	5.00	0.00	0.00	0.00	0.00	487.51	E
7	5.00	1.20	2.39	0.07	-27973.00	543.25	E
8	5.00	20.20	40.35	1.21	32760.00	541.36	C
9	5.00	86.00	195.60	5.87	18173.00	477.30	
10	5.00	123.20	283.60	8.52	12836.00	479.08	
11	5.00	131.80	298.59	8.97	17104.00	479.02	
12	5.00	0.20	0.40	0.01	657.00	542.37	E
13	5.00	0.00	0.00	0.00	0.00	544.32	E
14	5.00	1143.60	2284.26	68.65	-10153.00	540.91	E
15	5.00	1586.20	3592.56	107.88	-13493.00	477.13	
16	5.00	2799.80	4797.19	144.12	-21005.00	478.94	
17	5.00	3054.30	7201.33	219.25	14584.00	477.54	
18	5.00	3158.20	7567.36	227.25	-14150.00	401.33	

Figure 2

GROSS MOISTURE ANALYSIS OF SILICATES IN A MOBILE RADIOLOGICAL LABORATORY

Analyte: Percent moisture	**Method No.:** MLR400
Matrix: Silicates	**Drying Options:** Time: 1 to 60 min Slope: 0.1 to 60 min 0.01 to 9.99% change
Procedure: Moisture determination system	
Effective Date: 10/10/92	**Author:** Bret Lockhart

SAFETY NOTE: Before beginning this procedure, read all of the Material Safety Data Sheets for the chemicals listed in Sec. 6. Read Sec. 4.3 of the EM-9 Safety Manual for information on personal protective clothing and equipment. Read Sec. 11 of this procedure and Source Material 12.3 and 12.4 for proper waste disposal practices.

1. Principal of Method

1.1. 10-15 g samples (silicates) are loaded directly on aluminum plates without chemical dissolution or evaporation.

1.2. Samples are heated at 200°C for 5 min on a moisture analyzer.

2. Sensitivity

2.1. The sensitivity varies with the percent change in soil moisture.

2.2. The minimum detectable limit for moisture is 0.01 percent in 0.1 min, based on any given sample weight, counted until percent change is not met.

3. Accuracy and Precision

3.1. The accuracy is 100% with a precision of ±0.1%

4. Collection and Storage of Samples

4.1. There are no special collection and storage requirements.

5. Apparatus

5.1. Moisture analysis instrument: Denver Instrument Company, model no. IR-100.

5.2. Disposable aluminum pans: 4.0-in. diam., 0.25 in. deep, part no. 900274.1, Denver Instrument Co.

5.3. Plastic weight boat: 4 × 4 in.

6. Reagents

6.1. No reagents are used in this technique.

7. Calibration

7.1. Since the instrument determines the weight loss in percent of the initial weight, routine calibration of the system is not necessary for accurate results. However, periodic calibration is suggested when the instrument is used as a standard electronic balance.

7.1.1. To calibrate the analyzer a class I 50-g weight is required.

7.1.2. Lift the heater hood and place an empty disposable aluminum pan on the pan support. Scroll through the Set up Menu by continuously pressing the **mode** key until the display shows **CALIBRATION**.

7.1.2.1. Press the **enter** key to access the calibration procedure. Message prompts guide the operator through this procedure:

CALIBRATION - - - -
PRESS TARE NOW

7.1.2.2. Press the tare key; display shows:

CALIBRATION - - - -
PLACE 50 g WEIGHT

7.1.2.3. Place 50-g weight on disposable pan; display shows:

CALIBRATION - - - -
PRESS ENTER NOW

7.1.2.4. Press the **enter** key, display shows:

CALIBRATION - - - -
CALIBRATING

7.1.3. When the calibration is complete, the display shows that the calibration is done. Remove the weight and the main screen returns.

8. Procedure

8.1. Silicates.

8.1.1. Obtain the sample aliquot from the cooler holding the samples.

8.1.2. Remove 10-15 g of soil from the sample bag and place it in a 4- × 4-in. plastic weigh boat.

9. Operation of the Instrument

9.1. Initialize moisture analyzer.

9.1.1. After the unit is turned on, the slope for the percent moisture change must be recalled. Program #1 is set at a 0.10% change in 0.5 min at 200°C. This is the program that will be used.

9.1.1.1. Press the **recall** key and the display will ask for the program you wish to run.

9.2. Drying a sample.

9.2.1. Lift the heater hood and place an empty disposable pan on the pan support. Press the **start** key and the display shows:

SAMPLE NUMBER
NUMBER ****

9.2.2. If a different sample number is desired, use the numerical keys to select the desired sample number. Any number of 1 to 8 digits can be used. After a few seconds the display shows:

WT = **.***
TARE PAN WEIGHT

9.2.3. Press the **tare** key; the display shows:

WT = 0.000*
PLACE SAMPLE ON

9.2.4. Place the sample on the disposable pan, spreading it evenly over the surface. Close the hood. Display shows:

WT = 3.002
PRESS START

9.2.5 Wait approximately 3 s for the unit to stabilize. Press the start key; the display shows:

WT = 3.002
WORKING
then
P1 TIME = 00.01
200 C 0:00%M

9.2.6. The printer automatically prints out initial data when the drying cycle begins.

9.2.7. When the drying cycle ends, the display shows:

I. WT = 3.002
F. WT = 2.91
then
DIFF = 0.86
PERC = 2.86

9.2.8. The printer automatically prints final results when the drying cycle ends or the **stop** key is pressed.

10. Calculations

10.1. When the operator selects one of the six options, the analyzer automatically changes to the appropriate calculation mode. During a drying procedure, the display always shows the selected mode. The final printout also includes the calculation mode with the results.

OPTION	DISPLAY SHOWS
MOISTURE	% M

$$\frac{\text{moisture weight}}{\text{wet weight}} \times 100$$

11. Proper Waste Disposal Practices

11.1. Solid waste.

11.1.1. Sample-contaminated waste.

11.1.1.1. Sample-contaminated waste includes plastic weigh boats, spatulas, used planchets, Mylar, syringes, centrifuge tubes,

filter disks, and gloves. The waste is accumulated in a plastic bag on a daily basis, sealed, and placed within a 1- × 2- × 2-ft cardboard box kept within the van.

11.1.1.2. The box is labeled as compactible waste. The box is opened only for the period of time necessary to add waste.

11.1.1.3. When the box is full, it is sealed with tape, removed from the mobile lab, and returned to TA-59. A new box is prepared (tape the end of the box and line with a new plastic bag) and placed in the mobile lab.

11.1.1.4. The box is stored at TA-59 until the remainder of the analytical results characterizing the waste are obtained.

11.1.1.5. Once the above process is complete, the Waste Disposal Group (EM-7) is notified and waste disposal procedure is initiated.

11.1.2. Sample waste.

11.1.2.1. The sample waste is the sample after the counting process has been completed. This includes the 100-g sample from the NaI(Tl) counter, the 1-g sample from the gross alpha/beta instrument, the 15 g from the extraction for tritium analysis, and the 5-g sample for the soil moisture analysis.

11.1.2.2. The waste is accumulated on a daily basis and placed within a smaller bag. This bag is then sealed and appropriately marked with the date the waste was accumulated and the sample range within the bag (this is for later sample retrieval, if necessary).

11.1.2.3. The box is labeled as compactible waste. The box is opened only for the period of time necessary to add waste.

11.1.2.4. When the box is full, it is sealed with tape, removed from the mobile lab, and returned to TA-59. A new box is prepared (tape the end of the box and line with a new plastic bag) and placed in the mobile lab.

11.1.2.5. The box is stored at TA-59 until the remainder of the analytical results characterizing the waste are obtained.

11.1.2.6. Once the above process is complete, the Waste Disposal Group (EM-7) is notified and waste disposal procedure is initiated.

11.2. Liquid waste.

11.2.1. Liquid waste is generated from the process of liquid scintillation analysis. After the samples have been counted, the samples are returned to EM-9 at TA-59, and accumulated with the routine tritium analysis sample vials.

11.3. Waste pickup.

11.3.1. The surface exposure rate of the sealed box is determined by a radiation protection technician and is recorded on the Radioactive Solid Waste Disposal (RSWD) Record form.

11.3.2. Pickup by the Waste Management group of the full boxes of waste is requested using the current Chemical Waste Disposal Request (CWDR) form. The current Waste Profile form (WPRF) that describes the waste is referenced on both disposal request forms.

11.3.3. The Waste Management Group picks up the waste for disposal according to Laboratory policy.

12. Source Materials

12.1. Instruction manual for the IR-100 Moisture Analyzer, Denver Instrument Company, P.O. Box 39575, Denver, CO. 80239 (10/91).

12.2. G. Brooks, "Data Reduction Program for the MRAL," in progress, Environmental Chemistry Group, Los Alamos National Laboratory, (1992).

12.3. "Low-Level Radioactive Solid Waste," Administrative Requirement 10-2, in *Environment, Safety, and Health Manual*, Los Alamos National Laboratory Manual, Chapter 1 (most recent edition).

12.4. "Chemical, Hazardous, and Mixed Waste," Administrative Requirement 10-3, in *Environment, Safety, and Health Manual*, Los Alamos National Laboratory Manual, Chapter 1 (most recent edition).

LA-10300-M, Vol. III
Manual

Health and Environmental Chemistry: Analytical Techniques, Data Management, and Quality Assurance

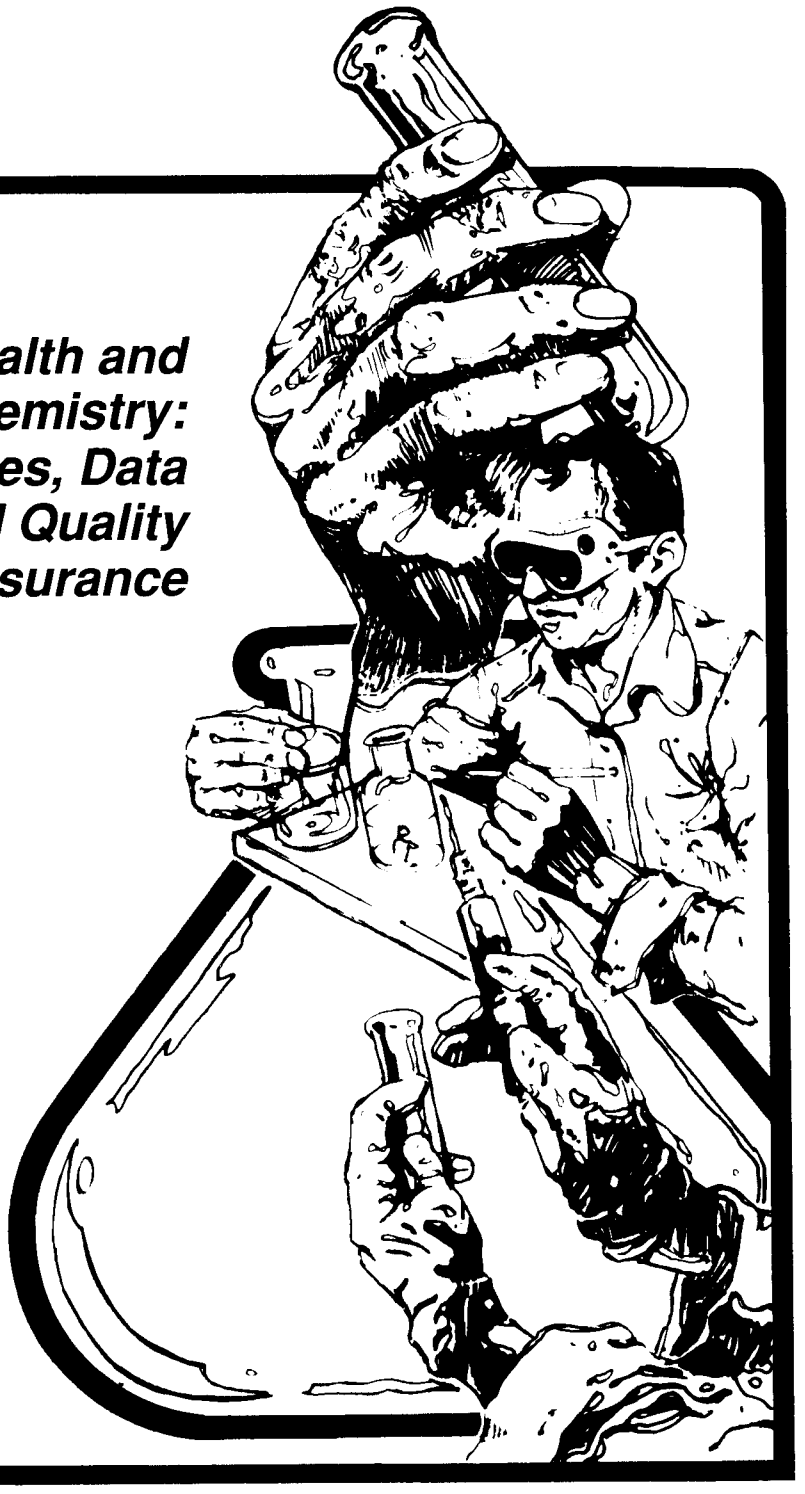

Los Alamos National Laboratory is operated by the University of California for the United States Department of Energy under contract W-7405-ENG-36.

Los Alamos
NATIONAL LABORATORY

Los Alamos, New Mexico 87545

Edited by Lori S. Tamura, Group IS-11
Composition by Liana Vigil and Elizabeth Stephens, Group EM-9
Cover art by Rod Furan, Group IS-12

An Affirmative Action/Equal Opportunity Employer

This report was prepared as an account of work sponsored by an agency of the United States Government. Neither The Regents of the University of California, the United States Government nor any agency thereof, nor any of their employees, makes any warranty, express or implied, or assumes any legal liability or responsibility for the accuracy, completeness, or usefulness of any information, apparatus, product, or process disclosed, or represents that its use would not infringe privately owned rights. Reference herein to any specific commercial product, process, or service by trade name, trademark, manufacturer, or otherwise, does not necessarily constitute or imply its endorsement, recommendation, or favoring by The Regents of the University of California, the United States Government, or any agency thereof. The views and opinions of authors expressed herein do not necessarily state or reflect those of The Regents of the University of California, the United States Government, or any agency thereof.

LA-10300-M, Vol. III
Manual

UC-907
Issued: May 1986
Revised: July 1993

Health and Environmental Chemistry: Analytical Techniques, Data Mangement, and Quality Assurance

Edited by Margaret A. Gautier

Los Alamos
NATIONAL LABORATORY
Los Alamos, New Mexico 87545

CONTENTS
(Vol. III)

WASTE WATER CHEMISTRY

Waste Water Chemistry

CONTENTS

Preface WW-7

Acknowledgments WW-9

Abstract WW-11

The page numbering convention used in this manual consists of the specific procedure number (shown at left in list below) followed by the page number for that procedure. Thus, WI110-2 is page two of procedure WI110. The right column in the list below gives each procedure's status or effective date.

Waste Water Chemistry Analytical Techniques

Waste Water Analytical Procedures - Inorganic

Atomic Absorption

WI100 Atomic Absorption Methods—Method 7000 (SW 846) ..... Retired

WI110 Mercury in Solid or Semisolid Waste—
CVAA (EPA Method 7471) 11/90

WI120 Mercury in Leachates, Water, and Waste Water—CVAA 11/90

Colorimetry

WI200 Ammonia in Water and Waste Water—Flow Injection ..... Retired

WI210 Ammonia Nitrogen in Water and Waste Water—Auto Analyzer ..... Retired

WI220 Boron in Natural and Geothermal Waters—Flow Injection ..... Retired

WI230 Chemical Oxygen Demand in Water and Waste Water—
Auto Analyzer or Manual 09/91

WI240 Chloride in Water and Waste Water—Flow Injection ..... Retired

WI250 Chromium VI in Water and Waste Water—Spectrophotometric ..... Retired

WI260	Chromium VI in Water and Waste Water—Flow Injection	08/91
WI270	Cyanide in Waste Water—Auto Analyzer	Retired
WI280	Nitrate in Water and Waste Water—Flow Injection	Retired
WI290	Nitrate Nitrogen in Water and Waste Water—Auto Analyzer	Retired
WI300	Nitrite Nitrogen in Water and Waste Water—Auto Analyzer	Retired
WI310	Nitrite Nitrogen in Water and Waste Water—Flow Injection	Retired
WI320	Phosphorus in Water and Waste Water—Auto Analyzer	01/92
WI330	Silica in Water and Waste Water—Spectrophotometric	Retired
WI340	Silica in Water and Waste Water—Flow Injection	08/91
WI350	Sulfate in Water and Waste Water—Flow Injection	Retired
WI360	Total Kjeldahl Nitrogen in Water and Waste Water	In Progress
WI370	Turbidity of Water and Waste Water—Nephelometric	Retired

Gravimetry

WI400	Total Dissolved Solids in Water and Waste Water—Filterable Residue	08/91
WI410	Total Suspended Solids in Water and Waste Water—Nonfilterable Residue	Retired

Ion Chromatography

WI420	Calcium and Magnesium in Water and Waste Water—IC	Retired
WI425	Chloride and Sulfate in Water and Waste Water—IC	In Progress
WI428	Hardness of Water and Waste Water—Calculation	02/92
WI430	Sodium and Potassium in Water and Waste Water—IC	Retired

WI435 Sodium, Potassium, Calcium, and Magnesium by IC—Isocratic Determination with IONPAC CS10 Column 06/92

Potentiometry

WI440 Ammonia in Water and Waste Water—ISE ..... In Progress

WI450 Conductivity 08/91

WI460 Fluoride in Water and Waste Water 08/91

WI468 PH of Organic Waste Materials 11/91

WI470 PH of Water and Waste Water 02/92

WI480 Residual Chlorine in Water—Amperometric Titration 08/91

Titrimetry

WI500 Alkalinity in Water and Waste Water 09/91

WI510 Chemical Oxygen Demand in Water and Waste Water—Titration .... Retired

WI520 Halides in Waste Water and RCRA Waste ..... Retired

WI529 Sulfite in Water and Waste Water—Titrimetry 03/91

WI530 Total Cations in Water and Waste Water—Ion Exchange and Potentiometric Titration 08/91

Miscellaneous

WI600 Ash of Organic Waste Material ..... Retired

WI610 Corrosivity of Solution Toward Steel 03/93

WI620 EP Toxicity Extraction ..... Retired

WI630 Flash Point—Pensky-Martens Closed Cup Tester 02/92

WI640 Heat Capacity of Combustible Materials 02/92

WI650 Inorganic Toxicity Characteristic Leaching Procedure (TCLP) 12/92

WI660 Oil and Grease, Total Recoverable 02/92

WI670 Specific Gravity of Water and Waste Water 02/92

WI680 Trace Metal Digestion—Drinking Water, Surface Water, and NPDES Effluents 01/92

WI690 Trace Metal Digestion—RCRA (SW-845 Method 7000) ..... In Progress

WI700 Trace Metal Digestion—Sludge 02/91

WI710 Viscosity ..... In Progress

Waste Water Analytical Procedures - Radiochemical

WR100 Americium-241 in Waste Water—Instrumental Gamma-Ray Spectrometry Using a Ge(Li) Detector 05/92

WR110 Americium-241 in Waste Water and Filter Cake—Instrumental Gamma-Ray Spectrometry Using a NaI Detector 11/90

WR120 Cesium-137 in Waste Water—Instrumental Gamma-Ray Spectrometry 10/90

WR130 Cesium (Radioactive) in Waste Water—Phosphomolybdate Procedure ..... Retired

WR140 Gamma Activity in Waste Water—Gamma Spectrometry with Lithium-Drifted Germanium Detector 10/90

WR150 Gross Alpha, Beta, and Gamma Activity in Waste Water, Filter Cake, and Organic Materials—Gas Flow Proportional Counting 10/90

WR160 Gross Gamma Activity in Liquid Waste Water—NaI Detector ..... Retired

WR170 Plutonium, Americium, and Uranium in Waste Water and Filter Cake—Aluminum Nitrate/Aliquat-336 Procedure ..... Retired

WR180 Plutonium, Americium, and Uranium in Waste Water and Filter Cake—Neodymium Fluoride Coprecipitation 11/90

WR190 Strontium-89 and Strontium-90 in Waste Water—Ion Exchange 12/90

WR200 Tritium in Waste Water—Liquid Scintillation Counting 11/90

PREFACE

The Health and Safety (HS) and Environmental Management (EM) Divisions are engaged in work to identify hazards to the workers and the environment at the Los Alamos National Laboratory. Decisions that must be made in this respect depend upon the availability of sound analytical data. Procedures for the measurement of the presence and concentration of substances hazardous to human health as well as an evaluation of the quality of the environment are essential to satisfactory decision making.

An important tool for evaluating the exposure of workers and the environment to toxic substances is the analytical method. This section of the manual is a collection of analytical methods used by the waste water chemist for monitoring waste discharges and treatment process samples under the National Pollutant Discharge Elimination System. These methods measure the concentration of the analytes with the precision, accuracy, and specificity required by EM-7, Waste Management. It is part of the overall quality control documentation effort to support the health, safety, and environment programs of the Laboratory.

The analytical procedures were developed by the staff of the Environmental Chemistry Group or were modified from methods developed and evaluated by the Environmental Protection Agency (EPA) and others for use with waste water samples. Each procedure is presented in a simple and concise manner. We hope any competent analyst will be able to use these written procedures.

ACKNOWLEDGMENTS

The encouragement, leadership, and support offered by Group EM-9 management are appreciated. The general contributions of the following individuals in developing, evaluating, or writing the methods contained herin are gratefully acknowledged:

Charles T. Apel, Inorganic Section Leader
Michael G. Bell
Malti Bhatia
Colleen E. Burns
Terry D. Filer
Barbara J. Hemberger
Evangeline M. Hodge
Janet D. Montoya
Harold P. Patterson
Richard D. Robinson
Ava D. Salman
Kathleen A. Straw
Mary Carol Williams

The section is prepared in loose-leaf form to facilitate revisions of the procedures and the inclusion of additional procedures. Requests for clarification or for help in resolving difficulties encountered while using the procedures are welcome.

Margaret A. Gautier
Editor

Waste Water Chemistry
Analytical Techniques

Edited by

Margaret A. Gautier

ABSTRACT

This section of the manual has been prepared to document the analytical methodology used by the Los Alamos National Laboratory Environmental Chemistry Group. It is part of the overall quality control effort to support the health, safety, and environmental programs at the Laboratory. The section provides analytical methods for the monitoring of waste discharges under the National Pollutant Discharge Elimination System. The analytical procedures were developed by the Environmental Chemistry staff, were modified from standard methods developed and evaluated by the Environmental Protection Agency (EPA), or were adapted from procedures found in the literature. The procedures have been tested by chemists and technicians to prove their validity. The methods measure the concentration of the desired analytes with the precision, accuracy, and specificity required by Group EM-7, Waste Management, and meet the needs of federal legislation. The procedures utilize equipment and skills available in modern waste water chemistry laboratories. Precision and accuracy statements are provided where such data are available. Each procedure is presented in a simple and concise manner and includes interferences, apparatus, reagent preparation, calibration methods, and data reduction formulas.

ATOMIC ABSORPTION METHODS — METHOD 7000 (SW-846)

Analyte: Metals	**Method No.:** WI100
Matrix: Water, waste water, extracts, leachates, and solid wastes	**Detection Limits:** variable (see Section 2).
	Accuracy and Precision: variable (see Section 3)
Procedure: Atomic absorption spectrometry	
Effective Date: 01/01/84 to 01/01/92	**Author:** Mary Carol Williams

SAFETY NOTE: Before beginning this procedure, read all of the Material Safety Data Sheets for the chemicals listed in Sec. 8. Read Sec. 4.3 of the EM-9 Safety Manual for information on personal protective clothing and equipment.

1. Principle of Method

1.1. Metals in solution may be readily determined by atomic absorption spectrometry (AAS). The method is simple, rapid, and applicable to a large number of metals in drinking, surface, and saline waters and in domestic and industrial wastes. Drinking water free of particulate matter may be analyzed directly, while ground water, other aqueous samples, EP extracts, industrial wastes, soils, sludges, sediments, and other solid wastes require digestion prior to analysis. Solubilization and digestion procedures are presented in Methods WI620, WI650, WI680, WI690, and WI700.

1.2. Although methods have been reported for the analysis of solids by atomic absorption spectrometry, the technique generally is limited to metals in solution or solubilized through some form of sample processing.

1.3. In direct-aspiration atomic absorption spectrometry, a sample is aspirated and atomized in a flame. A light beam from a hollow cathode lamp or an electrodeless discharge lamp is directed through the flame, into a monochromator, and onto a detector that measures the amount of absorbed light. Absorption depends upon the presence of free, unexcited ground-state atoms in the flame. Because the absorbed wavelength of the light beam is characteristic of only the metal being determined, the light energy absorbed by the flame is a measure of the concentration of that metal in the sample. This principle is the basis of atomic absorption spectrometry.

1.4. When using the furnace technique in conjunction with an atomic absorption spectrometer, a representative aliquot of a sample is placed in the graphite tube in the furnace, evaporated to dryness, charred, and atomized. Because a greater percentage of available analyte atoms is vaporized and dissociated for absorption

in the tube rather than the flame, the use of smaller sample volumes or detection of lower concentrations of elements is possible. The principle is essentially the same as with direct aspiration atomic absorption, except that a furnace, rather than a flame, is used to atomize the sample. Radiation from a given excited element is passed through the vapor containing ground-state atoms of that element. The intensity of the transmitted radiation decreases in proportion to the amount of the ground-state element in the vapor. The metal atoms to be measured are placed in the beam of radiation by increasing the temperature of the furnace, thereby causing the injected specimen to be volatilized. A monochromator isolates the characteristic radiation from the hollow cathode lamp or electrodeless discharge lamp, and a photosensitive device measures the attenuated transmitted radiation.

2. Detection Limits

2.1. Detection limits, sensitivity, and optimum ranges for the metals will vary with the matrices and models of atomic absorption spectrometers.

2.1.1. The data shown in Table I provide some indication of the detection limits obtainable by direct aspiration and by furnace techniques. For clean, aqueous samples, the detection limits shown in the table for direct aspiration may be extended downward with scale expansion and upward by using a less sensitive wavelength or by rotating the burner head.

2.1.2. Detection limits for direct aspiration may also be extended through concentration of the sample and/or through solvent extraction techniques. For certain samples, lower concentrations may also be determined using the furnace techniques.

2.1.3 The detection limits given in Table I are somewhat dependent on equipment (such as the type of spectrophotometer and furnace accessory, the energy source, and the degree of electrical expansion of the output signal), and are greatly dependent on sample matrix.

2.1.4. When using furnace techniques, the analyst should be aware that, at elevated temperatures, chemical reactions may occur that may result in either suppression or enhancement of the analysis element. To ensure valid data with furnace techniques, the analyst must examine each matrix for interference effects (Step 5.2) and, if detected, treat them accordingly, using either successive dilution, matrix modification, or the method of standard additions (Step 5.2.1).

2.1.5. The Contract Required Detection Limits (CRDLs) are also listed in Table I.

TABLE I. ATOMIC ABSORPTION CONCENTRATION RANGES

	Direct Aspiration		Furnace[a,b]	
Metal	Det. Limit (mg/L)	Sensitivity (mg/L)	Det. Limit (mg/L)	CRDL (mg/L)
Aluminum	0.1	1	--	0.2
Antimony	0.2	0.5	0.003	0.06
Arsenic[b]	--	--	0.001	0.01
Barium	0.1	0.4	--	0.2
Beryllium	0.005	0.025	0.0002	0.005
Cadmium	0.005	0.025	0.0001	0.005
Calcium	0.01	0.08	--	5
Chromium	0.05	0.25	0.001	0.01
Cobalt	0.05	0.2	0.001	0.05
Copper	0.02	0.1	--	0.025
Iron	0.03	0.12	--	0.1
Lead	0.1	0.5	0.001	0.005
Magnesium	0.001	0.007	--	5
Manganese	0.01	0.05	--	0.015
Molybdenum	0.1	0.4	0.001	--
Nickel	0.04	0.15	--	0.04
Potassium	0.01	0.04	--	5
Selenium[b]	0.002	--	0.002	0.005
Silver	0.01	0.06	--	0.01
Sodium	0.002	0.15	--	5
Thallium	0.1	0.5	0.001	0.01

TABLE I. ATOMIC ABSORPTION CONCENTRATION RANGES (cont)				
	Direct Aspiration		Furnace[a,b]	
Metal	Det. Limit (mg/L)	Sensitivity (mg/L)	Det. Limit (mg/L)	CRDL (mg/L)
Tin	0.8	4	--	0.04
Vanadium	0.2	0.8	0.004	0.05
Zinc	0.005	0.02	--	0.02

[a] For furnace sensitivity values, consult instrument operating manual.

[b] The listed furnace values are those expected when using 20-μL injections and normal gas flow, except in the cases of arsenic and selenium, where gas interrupt is used.

3. Accuracy and Precision

3.1. The table below lists accuracy and precision data on materials analyzed by EM-9.

ACCURACY AND PRECISION DATA FOR STANDARD REFERENCE MATERIALS ANALYZED BY EM-9				
Element	No. of Samples	Mean (μg/L)	Std. Dev. (μg/L)	Certified Value (μg/L)
Graphite Furnace				
As	41	27.4	1.4	26.7 ± 3.8
Cr	44	6.7	0.8	7 ± 1
Se	59	10.9	1.0	11 ± 2
Tl	100	7.0	0.9	8 ± 0.2
Flame				
Cd	17	24.4	1.7	2.5 ± 3.8
Cr	19	103	4.5	100 ± 16
Cu	21	103	3.0	100 ± 11
Fe	64	104	4.0	100 ± 18

ACCURACY AND PRECISION DATA FOR STANDARD REFERENCE MATERIALS ANALYZED BY EM-9 (cont)				
Element	No. of Samples	Mean (μg/L)	Std. Dev. (μg/L)	Certified Value (μg/L)
Pb	24	100	6.0	100 ± 15
Zn	18	101	1.6	100 ± 11
Ag	113	502	0.007	500 ± 50

4. Quality Control

4.1. All quality control (QC) data should be kept up to date and available for easy reference or inspection.

4.2. A calibration curve must be prepared each day with a minimum of one reagent blank and three standards, verified by use of at least one reagent blank and one standard at or near the midrange. Checks throughout the day must be within 20% of the original curve.

4.3. If 20 or more samples per day are analyzed, the working standard curve must be verified by running an additional standard at or near the midrange every 10 samples. Checks must be within ±20% of the true value.

4.4. At least one duplicate and one spike sample should be run every 10 samples or with each matrix type to verify the precision of the method.

4.5. Serial dilution.

4.5.1. Withdraw from the sample two equal aliquots. To one of the aliquots add a known amount of analyte and dilute both aliquots to the same predetermined volume.

NOTE: The dilution volume should be based on the analysis of the undiluted sample. Preferably, the dilution should be 1:4, keeping in mind that the diluted value should be at least 5 times the instrument detection limit. Under no circumstances should the dilution be less than 1:1.

4.5.2. Analyze the diluted aliquots.

4.5.3. The unspiked results, multiplied by the dilution factor, should be compared to the original determination. Agreement of the results (within 10%) indicates the absence of interference.

4.5.4. Comparison of the actual signal from the spike with the expected response from the analyte in an aqueous standard should help confirm the finding from the dilution analysis.

4.6. Method of standard additions. Where the sample matrix is so complex that viscosity, surface tension, and components cannot be accurately matched with standards, the method of standard addition may be used. Two versions of this method are outlined below.

4.6.1. In one version of this method, equal volumes of sample are added to a double-deionized (Type II) water blank and to a standard. If a higher degree of accuracy is required, more than one addition should be made. The absorbance of each solution is determined and then plotted on the vertical axis of a graph, with the concentrations of the known standards plotted on the horizontal axis. When the resulting line is extrapolated back to zero absorbance, the point of interception of the abscissa is the concentration of the unknown. The abscissa on the left of the ordinate is scaled the same as on the right side.

4.6.2. A second version of this technique is the single-addition method, in which two identical aliquots of the sample solution, each of volume V_x, are taken. To the first (labeled A) is added a small volume V_s of a standard analyte solution of concentration C_s. To the second (labeled B) is added the same volume V_s of the solvent. The analytical signals of A and B (S_A and S_B, respectively) are measured and corrected for nonanalyte signals. The unknown sample concentration C_x is calculated using the following equation.

$$C_x = \frac{S_B V_s C_s}{(S_A - S_B)\, V_x} ,$$

where C_x = unknown sample concentration,
S_A and S_B = the analytical signals (corrected for the blank),
V_s = volume of standard analyte solution,
C_s = concentration of standard analyte solutions, and
V_x = volume of aliquot of sample solution.

NOTE: V_s and C_s should be chosen so that S_A is roughly twice S_B on the average. It is best if V_s is made much less than V_x, so that C_s is much greater than C_x, to avoid excess dilution of the sample matrix. If a separation or concentration step is used, the additions are best made first and carried through the entire procedure.

4.6.3. The method of standard additions can be very useful. However, the following limitations must be taken into consideration for the results to be valid.

- The absorbance plot of sample and standards must be linear over the concentration range of concern. For best results, the slope of the plot should be nearly the same as the slope of the aqueous standard curve. If the slope is significantly different (more than 20%), caution should be exercised.

- The effect of the interference should not vary as the ratio of analyte concentration to sample matrix changes, and the standard addition should respond in a similar manner as the analyte.

- The determination must be free of spectral interference and corrected for nonspecific background interference.

5. Interferences

5.1. Direct aspiration.

5.1.1. The most troublesome interference in AAS is usually termed "chemical" and is caused by lack of absorption of atoms bound in molecular combination in the flame. This phenomenon can occur when the flame is not sufficiently hot to dissociate the molecule, as in the case of phosphate interference with magnesium, or when the dissociated atom is immediately oxidized to a compound that will not dissociate further at the temperature of the flame. The addition of lanthanum will overcome phosphate interference in magnesium, calcium, and barium determinations. Similarly, silica interference in the determination of manganese can be eliminated by the addition of calcium.

5.1.2. Chemical interferences may also be eliminated by separating the metal from the interfering material. Although complexing agents are employed primarily to increase the sensitivity of the analysis, they may also be used to eliminate or reduce interferences.

5.1.3. The presence of high dissolved solids in the sample may result in an interference from nonatomic absorbance such as light scattering. If a background correction is not available, a nonabsorbing wavelength should be checked. Preferably, samples containing high solids should be extracted.

5.1.4. Ionization interferences occur when the flame temperature is sufficiently high to generate the removal of an electron from a neutral atom, giving a positively charged ion. This type of interference can generally be controlled by the addition, to both standard and sample solutions, of a large excess (1,000 mg/L) of an easily ionized element such as K, Na, Li, or Cs.

5.1.5. Spectral interferences can occur when an absorbing wavelength of an element that is present in the sample but not being determined falls within the width of the absorption line of the element of interest. The results of the determination will then be erroneously high, due to the contribution of the interfering element to the atomic absorption signal. Interference can also occur when resonant energy from another element in a multielement lamp, or from a metal impurity in the lamp cathode, falls within the bandpass of the slit setting when that other metal is present in the sample. This type of interference may sometimes be reduced by narrowing the slit width.

5.1.6. Samples and standards should be monitored for viscosity differences that may alter the aspiration rate.

5.1.7. All metals are not equally stable in the digestate, especially if it contains only HNO_3, not HNO_3 and HCl. The digestate should be analyzed as soon as possible, with preference given to Sn, Sb, Mo, Ba, and Ag.

5.2. Furnace procedure.

5.2.1. Although the problem of oxide formation is greatly reduced with furnace procedures because atomization occurs in an inert atmosphere, the technique is still subject to chemical interferences. The composition of the sample matrix can have a major effect on the analysis. It is these matrix effects which must be determined and taken into consideration in the analysis of each different matrix encountered. To help verify the absence of matrix or chemical interference, the serial dilution technique (see Step 4.5) may be used. Those samples which indicate the presence of interference should be treated in one or more of the following ways:

- Successively dilute and reanalyze the samples to eliminate interferences.

- Modify the sample matrix to either remove the interferences or stabilize the analyte. Examples include the addition of ammonium nitrate to remove alkali chlorides and the addition of ammonium phosphate to retain cadmium. The mixing of hydrogen with the inert purge gas has also been used to suppress chemical interference. The hydrogen acts as a reducing agent and aids in molecular dissociation.

- Analyze the sample by the method of standard additions while noting the precautions and limitations of its use (see Step 4.6).

5.2.2. Gases generated in the furnace during atomization may have molecular absorption bands encompassing the analytical wavelength. When this occurs, use either background correction or choose an alternate wavelength. Background correction may also compensate for nonspecific broad-band absorption interference.

5.2.3. Continuum background correction cannot correct for all types of background interference. When the background interference cannot be compensated for, chemically remove the analyte or use an alternate form of background correction, e.g., Zeeman background correction.

5.2.4. Interference from a smoke-producing sample matrix can sometimes be reduced by extending the charring time at a higher temperature or utilizing an ashing cycle in the presence of air. Care must be taken, however, to prevent loss of the analyte.

5.2.5. Samples containing large amounts of organic materials should be oxidized by conventional acid digestion before being placed in the furnace. This will minimize broad-band absorption.

5.2.6. Anion interference studies in the graphite furnace indicate that, under conditions other than isothermal, the nitrate anion is preferred. Therefore, nitric acid is preferable for any digestion or solubilization step. If another acid in addition to HNO_3 is required, a minimum amount should be used. This applies particularly to hydrochloric acid and, to a lesser extent, to sulfuric and phosphoric acids.

5.2.7. Carbide formation resulting from the chemical environment of the furnace has been observed. When carbides form, the metal is released very slowly from the resulting metal carbide as atomization continues. For example, molybdenum may require 30 s or more atomization time before the signal returns to baseline levels. Carbide formation is greatly reduced and the sensitivity increased with the use of a pyrolytically coated graphite furnace.

5.2.8. For comments on spectral interference, see Step 5.1.5.

5.2.9. Cross-contamination and contamination of the sample can be major sources of error because of the extreme sensitivities achieved with the furnace. The sample preparation work area should be kept scrupulously clean. All glassware should be cleaned as directed in Step 6.2. Pipette tips are a frequent source of contamination. If suspected, they should be acid-soaked with 1:5 HNO_3 and rinsed thoroughly with tap and double-deionized (Type II) water. The use of a better-grade pipette tip

can greatly reduce this problem. Special attention should be given to reagent blanks in both analysis and in the correction of analytical results. Lastly, pyrolytic graphite, because of the production process and handling, can become contaminated. As many as five to ten high-temperature burns may be required to clean the tube before use.

6. Handling and Storage of Samples

6.1. Table II lists sample preservation and holding times.

TABLE II. SAMPLE PRESERVATION AND HOLDING TIMES

Measurement Parameter	Container[a]	Preservative[b]	Maximum Holding[c]
Waters			
Metals[d]	P,G	HNO_3 to pH < 2	6 months
Mercury	P,G	HNO_3 to pH < 2	28 days
Soils/Sediments/Wastes			
Store at 4°C (± 2°C) until digestion.			

[a] Polyethylene (P) or glass (G).
[b] Sample preservation is performed by the sampler immediately upon sample collection.
[c] Samples must be analyzed as soon as possible after collection. The times listed are the maximum times that samples may be held before analysis and still be considered valid.
[d] Samples are filtered immediately on-site by the sampler before adding preservative for dissolved elements.

6.2. Glassware cleaning. Wash all glassware and polyethylene or Teflon containers, including sample bottles, in the following sequence: detergent, tap water, 1:1 nitric acid, tap water, 1:1 hydrochloric acid, tap water, and Type II water. (Chromic acid should not be used as a cleaning agent for glassware if chromium is to be included in the analytical scheme.) If, through an active analytical quality control program using spiked samples and reagent blanks, it can be documented that certain steps in the cleaning procedure are not required for routine samples, those steps may be eliminated from the procedure.

7. Apparatus

7.1. Atomic absorption spectrophotometer: Model 5000, Perkin-Elmer, Norwalk, Connecticut or similar double-beam instrument having a grating monochromator, photomultiplier detector, adjustable slits, a wavelength range of 190 to 800 nm, and provisions for interfacing with a strip-chart recorder.

7.2. Burner: the burner recommended by the particular instrument manufacturer should be used. A nitrous oxide burner is required for certain elements.

7.3. Hollow cathode lamps or electrodeless discharge lamps.

7.4. Graphite furnace: a Zeeman furnace device capable of reaching the specified temperatures is satisfactory. Pyrolytically coated graphite tubes and platforms.

7.5. Strip-chart recorder: recommended for furnace work so that there will be a permanent record. Problems with the analysis such as drift, incomplete atomization, losses during charring, changes in sensitivity, peak shape, etc., can be easily recognized from the chart.

7.6. Pipettes: 5- to 1000-μL with disposable tips. Pipette tips should be checked as a possible source of contamination prior to use.

7.7. Pipettes: class A, volumetric.

7.8. Pressure-reducing valves: supplies of fuel and oxidant should be maintained by suitable valves at pressures somewhat higher than the controlled operating pressure of the instrument.

7.9. Polycarbonate cups: disposable.

8. Reagents

8.1. Type II water (double-deionized, less than 18 μmhos/cm). Use Type II water for the preparation of all reagents and calibration standards and as dilution water.

8.2. Nitric acid (HNO_3, 1:1). Use a spectrograde acid certified for AAS use. Prepare a 1:1 dilution with Type II water by adding the concentrated acid to an equal volume of water.

8.3. Hydrochloric acid (HCl, 1:1). Use a spectrograde acid certified for AAS use. Prepare a 1:1 dilution with Type II water by adding the concentrated acid to an equal volume of water.

8.4. Fuel and oxidant. Commercial-grade acetylene is generally acceptable. Air may be supplied from a compressed-air line, a laboratory compressor, or a cylinder of compressed air. Reagent-grade nitrous oxide is also required for certain determinations. Standard, commercially available argon and nitrogen are required for furnace work.

8.5. Argon (100-psi minimum tank pressure and 50-psi minimum regulator pressure).

8.6. Cooling water (pressure <30 psi, temperature 15°C-25°C).

9. Calibration and Standards

9.1. Stock standard metal solutions. Stock standard solutions are prepared from high-purity metals, oxides, or nonhygroscopic reagent-grade salts using Type II water and redistilled nitric or hydrochloric acids. Sulfuric or phosphoric acids should be avoided because they produce an adverse effect on many elements. The stock solutions are prepared at concentrations of 1,000 mg of the metal per liter. Commercially available standard solutions may also be used. Where the sample viscosity, surface tension, and components cannot be accurately matched with standards, the method of standard additions should be used (see Step 4.6).

9.2. Calibration standards. For those instruments that do not read out directly in concentration, a calibration curve is prepared to cover the appropriate concentration range. Usually, this means the preparation of standards which produce an absorbance of 0.0 to 0.7. Calibration standards are prepared by diluting the stock metal solutions at the time of analysis. For best results, calibration standards should be prepared fresh each time a batch of samples is analyzed. Prepare a blank and at least three calibration standards in graduated amounts in the appropriate range of the linear part of the curve. The calibration standards should be prepared using the same type of acid or acids at the same concentrations as found in the samples following processing. Beginning with the blank and working toward the highest-concentration standard, aspirate the solutions and record the readings. Repeat the operation with both the calibration standards and the samples a sufficient number of times to secure a reliable average reading for each solution.

9.3. Spiking standards. Prepare a mixed spiking solution so that a 1-mL aliquot will give the spike levels listed in Table III.

TABLE III. SPIKING LEVELS[a] FOR SPIKED SAMPLE ANALYSIS

	Flame AAS (μg/L)		Furnace AAS (μg/L)	
Element	Water	Sediment[b]	Water	Sediment[b]
Aluminum	2,000	*		
Antimony			50	50
Arsenic			20	40
Barium	2,000	2,000		
Beryllium	50	50		
Cadmium	50	50	5	5
Calcium	100,000	*		
Chromium	200	200		
Cobalt	500	500		
Copper	250	250		
Iron	1,000	*		
Lead	500	500	20	
Magnesium	50,000	*		
Manganese	200	500		
Nickel	400	500		
Potassium	50,000	*		
Selenium			10	10
Silver	50	50		
Sodium	100,000	*		

[a] Amount to add prior to digestion/distillation — choose amount appropriate to method of analysis. Elements without spike levels and not designated with an asterisk should be spiked at appropriate levels.

[b] The levels shown indicate concentrations in the digestate of the spiked sample.

* No spike required.

TABLE III. SPIKING LEVEL[a] FOR SPIKED SAMPLE ANALYSIS (cont)

	Flame AAS (μg/L)		Furnace AAS (μg/L)	
Element	Water	Sediment[b]	Water	Sediment[b]
Thallium			50	50
Tin	400	500	200	
Vanadium	500	500		
Zinc	200	500		

[a] Amount to add prior to digestion/distillation — choose amount appropriate to method of analysis. Elements without spike levels and not designated with an asterisk should be spiked at appropriate levels.

[b] The levels shown indicate concentrations in the digestate of the spiked sample.

* No spike required.

10. Procedure

10.1. Preliminary treatment of waste water, ground water, EP extracts, and industrial waste is always necessary because of the complexity and variability of sample matrices. Solids, slurries, and suspended material must be subjected to a solubilization process before analysis. This process may vary with the metals to be determined and the nature of the sample being analyzed. Solubilization and digestion procedures are presented in Methods WI620, WI650, WI680, WI690, and WI700.

10.2. Direct aspiration (flame) procedure.

10.2.1. Optimize the AAS instrument. Read the magnetic card or manually type in the specifications for each analyte as listed in Table IV. Using **SET-UP**, adjust the lamp position to its peak value. If the peak value reads 99, push **GAIN** to reset to midrange. While aspirating a blank, set **AZ**. Using the sensitivity check solution, adjust the burner position (vertically, horizontally, and laterally), nebulizer rate, and flame conditions. The absorbance should read between 0.18 - 0.22. If the absorbance is <0.18, reoptimize and/or check standards. Check the working standards for repeatability of absorbance with previous analyses. Calculate characteristic concentration as follows.

$$CC = Cs \times \frac{0.0044}{A} ,$$

where: CC = characteristic concentration,
Cs = concentration of standard (mg/L), and
A = measured absorbance.

This should agree with the reported value to within 20% (see the Perkin-Elmer analytical methods book, Source Material 12.2).

10.2.2. Use digested samples. Any sample containing visible particulates should be filtered through a Whatman No. 2 filter that has been washed with Type II water. Ten percent of the samples should be run in duplicate and another 10% should be spiked.

10.2.3. Do not use different injection volumes for samples and standards. Instead, the sample should be diluted and the same size injection volume used for both samples and standards.

10.2.4. Load standards, QC samples, and samples in the carousel of the autosampler (50 maximum). Standards should be placed to recalibrate every 10 samples. The instrument expects three standards. If fewer standards are used, leave the corresponding positions empty. Place noncalibrating standards in positions to read as samples. Samples may also be aspirated manually.

10.2.5. Load a formatted disk in disk drive 1 and the data collection disk in drive 0 of the data station. Push **HOLD** and **PRINT** on the Perkin-Elmer 5000 before data station set-up. Set up the data collection disk by listing the date, types of samples, analyte, and sample number (including dilution). If the order is reversed, the data station will display an error message.

10.2.6. Key in recalibration positions, read delay (5 s), program delay (5 min), last sample number, and program number (corresponding to the program number on the Perkin-Elmer 5000 and the order selected for the data station). Be sure the electrical connection from the autosampler to the data station has been made.

10.2.7. To get an average of three results, push **3** then **AVG**. Push **3** then **CV** to get standard deviation.

10.3. Furnace procedure.

10.3.1. Optimize the AAS instrument. Read the magnetic card or manually type in the specifications for each analyte as indicated in Tables V and VI. Using **SET UP**, adjust the lamp position to its peak value. If the peak value reads 99, push **GAIN** to reset to midrange. To check for reagent contamination, run the furnace empty and set to zero. Then read the absorbance with the blank only and then with the blank plus reagent. Both of these should read <0.02 absorbance units. Check the working standards for repeatability of absorbance with previous analyses.

10.3.2. Use digested samples. Any sample containing visible particulates should be filtered through a Whatman No. 2 filter that has been washed with Type II water. Ten percent of the samples should be run in duplicate and another 10% should be spiked.

10.3.3. Load standards, QC samples, and samples in the carousel of the autosampler (35 maximum). Place noncalibrating standards in positions to be read as samples. A total of one blank and four standards must be used for Environmental Proctection Agency procedures.

10.3.4. Load a formatted disk in disk drive 1 and the data collection disk in drive 0 of the data station. Push **PEAK AREA** and **PRINT** on the Perkin-Elmer 5000 before data station set-up. Set up the data collection disk by listing the date, types of samples, analyte, and sample number. If the order is reversed, the data station will display an error message.

10.3.5. On the AS-40 autosampler panel, key in recalibration positions, last sample number, sample volume (μL), alternate volume (matrix modifier) (μL), HGA program number, and AAS instrument program number (corresponding to program number on the Perkin-Elmer 5000 and the order selected for the data station). Be sure the electrical connection from the autosampler to the data station has been made. Use of a platform in the pyrocoated tube (stepped temperature platform furnace conditions) is required for most elements.

10.4. After all analyses have been completed, obtain a printout of the data by pushing **TO DISK** twice, then **REPORT**. Replace the data collection disk with the report disk. Select the analyses to be reported and the form of the output from the menu. Then print the result. Attach the print output to the bound Laboratory notebook.

11. Calculations

11.1. Determine the metal concentration for both direct aspiration and furnace techniques by reading the metal value in mg/L or μg/L from the calibration curve or directly from the read-out system of the instrument.

11.2. If the sample was diluted, use the following equation.

$$C = A \frac{V + B}{V} ,$$

where C = concentration of metal in sample (μg/L),
A = amount of metal in diluted aliquot from calibration curve (μg/L),
B = acid blank matrix used for dilution (mL), and
V = sample aliquot (mL).

11.3. For solid samples, report all concentrations as μg/kg based on wet weight using the following equation.

$$C = \frac{A \times V}{W} ,$$

where C = concentration of metal in sample (μg/kg),
A = amount of metal in processed sample from calibration curve (μg/L),
V = final volume of the processed sample (mL), and
W = weight of sample (g).

12. Source Materials

12.1. US Environmental Protection Agency, "Methods for Chemical Analysis of Water and Wastes", EPA-600/4-79-020 (revised March 1983).

12.2. Perkin-Elmer, *Analytical Methods for Atomic Absorption Spectrophotometry* (Perkin-Elmer, Norwalk, Connecticut, 1982).

12.3. Perkin-Elmer, *Instructions: Zeeman/5000 System* (Perkin-Elmer, Norwalk, Connecticut, 1982).

TABLE IV. METAL ANALYSIS BY FLAME ATOMIC ABSORPTION SPECTROMETRY

Metal	RCRA Method[a]	Flame Fuel/ Oxidant[b]	Wave-length[c,d] (nm)	Slit Width (nm)	Det. Limit[e] (mg/L)	Conc. Range[f] (mg/L)	IS[g]
Al	7020	Ac/N_2O(R)	324.7(HCL)	0.7	0.1	5-50	2% K as KCl
Sb	7040	Ac/Air(L)	217.6(EDL) 231.1*	0.7	0.2	1-40	--
Ba	7080	Ac/N_2O(R)	553.6(HCL)	0.4	0.1	1-20	2% K as KCl
Be	7090	Ac/N_2O(R)	234.0(HCL)	0.7	0.005	0.05-2	0.1% F as HF if Al > 0.5 g/L
Cd	7130	Ac/Air(L)	228.8(HCL, EDL)	0.7	0.005	0.05-2	--
Ca	7140	Ac/N_2O(R)	422.7(HCL)	0.7	0.01	0.2-7	10% LaCl
Cr	7190	Ac/N_2O(R)	357.9(HCL)	0.7	0.05	0.5-10	--
Co	7200	Ac/Air(L)	240.7(HCL)	0.2	0.05	0.5-5	--
Cu	7210	Ac/Air(L)	324.7(HCL)	0.7	0.02	0.2-5	--
Fe	7380	Ac/Air(L)	248.3(HCL)	0.2	0.03	0.3-5	--
Pb	7420	Ac/Air(L)	283.3(HCL, EDL)	0.7	0.1	1-20	--
Li		Ac/Air(L)	670.8(HCL)	1.4	0.05	0.5-3	

[a]Resource Conservation and Recovery Act
[b]Acetylene (Ac), nitrous oxide (N_2O), air, fuel rich (R), fuel lean (L), stoichiometric (S).
[c]Hollow cathode lamp (HCL), electrodeless discharge lamp (EDL).
[d]Background correction required for all wavelengths below 325 nm.
[e]Detection limit.
[f]Concentration range.
[g]Interference suppressor.
*If [Pb] > 1000 mg/L.

TABLE IV. METAL ANALYSIS BY FLAME ATOMIC ABSORPTION SPECTROMETRY (cont)

Metal	RCRA Method[a]	Flame Fuel/ Oxidant[b]	Wave-length[c,d] (nm)	Slit Width (nm)	Det. Limit[e] (mg/L)	Conc. Range[f] (mg/L)	IS[g]
Mg	7450	Ac/Air(L)	285.2(HCL)	0.7	0.007	0.02-0.05	10% LaCl
Mn	7460	Ac/Air(L-S)	279.5(HCL)	0.2	0.01	0.1-3	--
Mo	7480	Ac/N_2O(R)	313.3(HCL)	0.7	0.1	1-40	2% Al $(NO_3)_3$
Ni	7520	Ac/Air(L)	232.0(HCL)	0.2	0.04	0.3-5	--
K	7610	Ac/Air(L)	766.5(HCL)	0.7	0.01	0.1-2	--
Ag	7760	Ac/Air(L)	328.1(HCL)	0.7	0.010	0.05-5	--
Na	7770	Ac/Air(L)	589.6(HCL)	0.7	0.002	0.03-1	--
Tl	7840	Ac/Air(L)	276.8(HCL, EDL)	0.7	0.1	1-20	--
Sn	7870	Ac/N_2O(R)	286.3(HCL)	0.7	0.8	10-300	--
V	7910	Ac/N_2O(R)	318.4(HCL)	0.7	0.2	2-100	--
Zn	7950	Ac/Air(L)	213.9(HCL)	0.7	0.005	0.05-1	--

[a]Resource Conservation and Recovery Act
[b]Acetylene (Ac), nitrous oxide (N_2O), air, fuel rich (R), fuel lean (L), stoichiometric (S).
[c]Hollow cathode lamp (HCL), electrodeless discharge lamp (EDL).
[d]Background correction required for all wavelengths below 325 nm.
[e]Detection limit.
[f]Concentration range.
[g]Interference suppressor.
*If [Pb] > 1000 mg/L.

TABLE V. METAL ANALYSIS BY ZEEMAN GRAPHITE FURNACE ATOMIC ABSORPTION SPECTROMETRY

Metal	RCRA Method	Purge Gas	Wavelength (nm)	Slit Width (nm)	Detection Limit (μg/L)	Concentration Range (μg/L)
Sb	7041	Ar, N_2	217.6(HCL, EDL)	0.7	3	20-300
As	7060	Ar	193.7(EDL)	0.7	2	5-100
Be	7091	Ar	234.9(HCL)	0.7	0.2	1-30
Cd	7131	Ar	228.8(HCL, EDL)	0.7	0.1	0.5-10
Cr[a]	7191	Ar	357.9(HCL)	0.7	1	5-100
Co	7201	Ar	240.7(HCL)	0.2	1	5-100
Pb	7421	Ar	283.3(HCL, EDL)	0.7	1	5-100
Se	7740	Ar	196.0(EDL)	2.0	2	5-100
Sn	7870	Ar	286.3(EDL)	0.7	5	20-100
Ag		Ar	328.1(HCL)	0.7	0.5	2-50
Tl	7841	Ar, N_2	276.8(EDL)	0.7	1	5-100
V[a]	7911	Ar	318.4(HCL)	0.7	4	10-200

[a] The atomization tubes used are pyrocoated graphite with a pyrocoated platform except for chromium and vanadium, which do not use the platform. These refractory metals are atomized off the wall of a pyrocoated tube.

TABLE VI. CONDITIONS FOR TRACE METALS ANALYSIS IN ZEEMAN FURNACE

	Matrix Modifier	Dry temperature/ ramp/bold	Ash temperature/ ramp/bold	Atomization temperature/ ramp/bold
Sb	0.02 mg Ni	90/5/20 130/10/10	1250/5/25	2400/0/5
As	0.2 mg Ni	90/5/20 130/10/10	1400/5/10	2300/0/5
Be	0.05 mg $Mg(NO_3)_2$	90/5/20 130/10/10	1350/10/35	2650/0/5
Cd	0.2 mg PO_4 + 0.01 mg $Mg(NO_3)_2$	90/5/20 130/10/10	650/5/40 20/5/10	1600/0/5
Cr	0.05 mg $Mg(NO_3)_2$	90/5/20 130/10/10	1650/30/20	2500/0/5
Pb	0.2 mg PO_4+ 0.01 mg $Mg(NO_3)_2$	90/5/20 130/10/10	800/5/45 20/10/10	1700/0/5
Se	0.2 mg Ni	90/5/20 130/10/10	800/5/10	2400/0/5
Tl	1% H_2SO_4	90/5/20 140/10/10	750/15/40	2000/0/5

All furnaces have a clean-out step with temperature of 2650°C for 5 s and a cool-down of 20°C for 20 s. The atomization step is read -1 and record -5.

Interference suppressors

KCl - Dissolve 95 g potassium chloride (KCl) in 400 mL of Type II water and dilute to 1 L.

LaCl - Dissolve 29 g lanthanium oxide (La_2O_3) in 250 mL of concentrated HCl (**CAUTION**, reaction is violent) and dilute to 500 mL with Type II water.

$Al(NO_3)_3$ - Dissolve 139 g aluminum nitrate $Al(NO_3)_3 \bullet 9\ H_2O$ in 150 mL of Type II water. Heat to dissolve. Cool and dilute to 200 mL with Type II water.

TABLE VI. CONDITIONS FOR TRACE METALS ANALYSIS IN ZEEMAN FURNACE (cont)

	Matrix Modifier	Dry temperature/ ramp/bold	Ash temperature/ ramp/bold	Atomization temperature/ ramp/bold
V	0.05 mg $Mg(NO_3)_2$	90/5/20 130/10/10	1300/15/20	2650/0/5
Sn	0.2 mg PO_4 + 0.01 mg $Mg(NO_3)_2$	90/5/20 130/10/10	800/5/25	2100/0/5

All furnaces have a clean-out step with temperature of 2650°C for 5 s and a cool-down of 20°C for 20 s. The atomization step is read -1 and record -5.

Interference suppressors

KCl - Dissolve 95 g potassium chloride (KCl) in 400 mL of Type II water and dilute to 1 L.

LaCl - Dissolve 29 g lanthanium oxide (La_2O_3) in 250 mL of concentrated HCl (**CAUTION**, reaction is violent) and dilute to 500 mL with Type II water.

$Al(NO_3)_3$ - Dissolve 139 g aluminum nitrate $Al(NO_3)_3 \bullet 9\ H_2O$ in 150 mL of Type II water. Heat to dissolve. Cool and dilute to 200 mL with Type II water.

MERCURY IN SOLID OR SEMISOLID WASTE — CVAA (EPA METHOD 7471)

Analyte: Mercury	**Method No.:** WI110
Matrix: Soil, sediment, sludges	**Minimum Detectable Concentration:** 0.2 μg/L
Procedure: Cold vapor atomic absorption (CVAA)	**Accuracy and Precision:** See Section 2
Effective Date: 01/01/88	**Author:** Mary Carol Williams

SAFETY NOTE: Before beginning this procedure, read all of the Material Safety Data Sheets for the chemicals listed in Sec. 7. Read Sec. 4.3 of the EM-9 Safety Manual for information on personal protective clothing and equipment.

1. Principle of Method

1.1. Method 7471 is approved for measuring total mercury (organic and inorganic) in soils, sediments, bottom deposits, and sludge-type materials. All samples must be subjected to an appropriate dissolution step prior to analysis.

1.2. Prior to analysis, the solid or semisolid samples must be prepared according to the procedures discussed in this method.

1.3. Method 7471, a cold vapor atomic absorption (CVAA) method, is based on the absorption of radiation at the 253.7-nm wavelength by mercury vapor. The mercury is reduced to the elemental state and aerated from solution in a closed system. The mercury vapor passes through a cell positioned in the light path of an atomic absorption spectrophotometer. Absorbance (peak area) is measured as a function of mercury concentration.

1.4. The typical detection limit for this method is 0.2 μg/L in solution.

2. Accuracy and Precision

2.1. Precision and accuracy data are available in Method 245.5 of *Methods for Chemical Analysis of Water and Waste* (see Source Material 9.2).

3. Quality Control

3.1. All quality control data should be kept up to date and available.

3.2. Calibration curves must be composed of a minimum of one blank and three standards. A calibration curve should be made for every hour of continuous sample analysis.

3.3. Dilute samples if they are more concentrated than the highest standard or if they fall on the plateau of a calibration curve.

3.4. Employ a minimum of one blank per sample batch to determine if contamination or any memory effects are occurring.

4. Interferences

4.1. Potassium permanganate is added to eliminate possible interference from sulfide. Concentrations as high as 20 mg/L of sulfide as sodium sulfide do not interfere with the recovery of added inorganic mercury from Type II water.

4.2. Copper has also been reported to interfere; however, copper concentrations as high as 10 mg/L had no effect on recovery of mercury from spiked samples.

4.3. Seawaters, brines, and industrial effluents high in chlorides require additional permanganate (as much as 25 mL) because during the oxidation step, chlorides are converted to free chlorine, which also absorbs radiation of 253.7 nm. Care must therefore be taken to ensure that free chlorine is absent before the mercury is reduced and swept into the cell. This may be accomplished by using an excess of hydroxylamine sulfate reagent (25 mL). In addition, the dead air space in the biological oxygen demand bottle must be purged before adding stannous sulfate. Both inorganic and organic mercury spikes have been quantitatively recovered from seawater by using this technique.

4.4. Certain volatile organic materials that absorb at this wavelength may also cause interference. A preliminary run without reagents should determine if this type of interference is present.

5. Sample Collection and Preservation

5.1. All sample containers must be prewashed with detergents, acids, and Type II water. Plastic or glass containers are suitable.

5.2. Aqueous samples must be acidified to a pH <2 with nitric acid. Solid samples must be refrigerated until digestion.

5.3. For solids or semisolids, moisture may be driven off in a drying oven at a temperature of 60°C.

6. Apparatus

6.1. Atomic absorption spectrometer (AAS): atomic absorption unit with an open sample presentation area in which to mount the absorption cell. Model 5000, Perkin-Elmer or equivalent. Instrument settings recommended by the manufacturer should be followed. Instruments designed specifically for the measurement of mercury using the cold vapor technique are commercially available and may be substituted for the atomic absorption spectrometer.

6.2. Mercury electrodeless discharge lamp.

6.3. Vapor generator assembly (VGA): with absorption cell and burner head. Model VGA-76, Varian Instrument Group Marketing, Sunnyvale, California.

6.4. Absorption cell: standard spectrophotometer cells, 10 cm long, with quartz end windows, may be used. Suitable cells may be constructed from Plexiglas tubing (1-in.-o.d. by 4.5-in.). The ends are ground perpendicular to the longitudinal axis, and quartz windows (1-in.-diam by 1/16-in.-thick) are cemented in place. The cell is strapped to a burner for support and aligned in the light beam by use of two 2-in. by 2-in. cards. Holes of 1 in. diam are cut in the center of each card. The cards are placed over each end of the cell. The cell is positioned and adjusted vertically and horizontally to give the maximum transmittance.

6.5. Pipettor: 10-mL Brinkman Macro-transferpettor.

6.6. Volumetric pipettes: class A, various sizes.

6.7. Volumetric flasks: class A, various sizes.

6.8. Centrifuge tubes: 50-mL, polyethylene.

6.9. Small reading lamp with 60-W bulb: may be used to prevent condensation of moisture inside the cell. The lamp should be positioned to shine on the absorption cell so that the air temperature in the cell is about 10° C above ambient.

7. Reagents

7.1. ASTM Type II water (double-deionized, less than 18 μmhos/cm). Water should be monitored for impurities.

7.2. Aqua regia. Prepare immediately before use by carefully adding three volumes of concentrated HCl to one volume of concentrated HNO_3.

7.3. Sulfuric acid (0.5 N). Dilute 14.0 mL of concentrated sulfuric acid to 1 L.

7.4. Stannous chloride. Dissolve 250 g of $SnCl_2$ and 200 mL of concentrated HCl in 500 mL of distilled deionized water in a 1000-mL volumetric flask. Dilute to volume.

7.5. Sodium chloride-hydroxylamine chloride solution. Dissolve 50 g of sodium chloride and 50 g of hydroxylamine chloride in distilled water and dilute to 500 mL.

7.6. Potassium permanganate (mercury-free, 5% solution, w/v). Dissolve 50 g of potassium permanganate in 1 L of Type II water.

7.7. Mercury stock standard (1000 mg/L). Fisher Scientific.

7.8. Chromium stock solution (1000 mg/L). Tare a 50-mL volumetric flask. Accurately weigh 141.5 ± 0.2 mg of analytical-grade $K_2Cr_2O_7$ into the flask. Dissolve the salt and dilute the standard to volume with Type II water.

7.9. Mercury spike solution. Add 50 μL of the 1000-mg/L mercury stock solution and 10 mL of the 1000-mg/L chromium stock solution to a 100-mL volumetric flask and dilute to volume with 10% HNO_3.

8. Procedure

8.1. Sample preparation.

8.1.1. Weigh triplicate 0.2-g aliquots of untreated sample into 50-mL polyethylene tubes. To spike samples, add 100 μL of spike solution (Step 7.8) to the samples in the polyethylene tubes. Add 5 mL of Type II water and 5 mL of aqua regia. Heat for 2 min in a water bath at 95°C.

8.1.2. Cool and add 15 mL of Type II water and 15 mL of potassium permanganate solution to each sample bottle. Mix thoroughly and place in the water bath for 30 min at 95°C.

CAUTION: Do this addition in a hood because Cl_2 could be evolved.

8.1.3. Weigh a separate aliquot of the sample before and after drying at 95°C to determine percent solids and correct sample results for moisture before reporting.

$$\%S = \frac{W \times 100}{W_t} ,$$

where %S = percent solids,
W = weight of solid, and
W_t = total weight of waste.

8.2. Standard preparation.

8.2.1. Stock standard A (10 mg/L). Dilute the 1000-mg/L mercury stock standard (Fisher Scientific) 1:100 by diluting 1.0 mL of stock standard to 100 mL with 1% HNO_3. Store in a light-protected flask.

8.2.2. Stock standard B (100 μg/L). Dilute stock standard A 1:100 by diluting 1.0 mL of Stock A to 100 mL with 1% HNO_3.

8.2.3. Working standards. Add the following volumes of stock standard B to approximately 10 mL of 1% HNO_3 in 100-mL volumetric flasks. Add 5 mL of aqua regia and heat for 2 min in a water bath at 95°C. Add 15 mL of $KMnO_4$ solution to each bottle and return to the water bath for 30 min. Cool just prior to analysis.

Stock Standard B (μL)	Mercury (μg/L)
200	0.4
500	1.0
1000	2.0
2000	4.0

8.2.4. Just before analysis, add 6 mL of sodium chloride-hydroxylamine chloride to reduce the excess permanganate. Swirl gently. Dilute to 50 mL with 1% HNO_3. Carefully add a magnetic stirring bar. Allow the solution to stir gently on a magnetic stirrer until gas evolution ceases.

8.2.5. Calibrate the AAS in concentration mode using one or two standards. Standard 1 must be in the linear range (<0.25 absorbance units) and standard 2 is normally twice standard 1. Lower-concentration standards are read as samples (see table in Step 8.2.3).

8.3. Instrument setup.

8.3.1. Optimize the AAS instrument. Align the absorption cell using an iron hollow cathode lamp (for brightness). See the VGA-76 operational manual for details (Source Material 9.5).

8.3.2. Using **SET UP**, adjust the mercury lamp position to its peak value. If the peak value reads 99, push **GAIN** to reset to midrange.

8.3.3. The following values are keyed in on the keyboard.

- Wavelength - 253.7 nm (AA-BG)
- Slit width - 0.7 nm
- Concentration of standard - 4.000 μg/L for water, 20.000 μg/L for sludges
- Read time - 6.0 s
- Peak area mode
- Average of three readings

8.4. Vapor generator setup.

8.4.1. Fill reagent container A with stannous chloride solution and container B with Type II water. Engage the pump tubes and turn the VGA-76 on. Aspirate Type II water in reagent and sample tubes for 1 min. Press **READ** and autozero the instrument. Place the reagent tubes in respective reagents and read the resulting blank absorbance after 1 min. If this reading is greater than 0.1 absorbance units, the reagents are contaminated and need to be remade. If the blank is less than 0.01 absorbance units, set **AZ**.

8.4.2. Aspirate calibration standards (lowest to highest) and check linearity, characteristic mass, and repeatability with previous analyses.

8.4.3. Push **PEAK AREA** and rerun blank and calibration standards, quality control samples, and samples. Always wait 45 - 60 s after sample introduction before reading the concentrations so that the system can stabilize. Record concentrations in bound Laboratory notebook.

8.4.4. After analyses are completed, flush the system with Type II water for 5 min. Turn the VGA-76 off and remove the pump tubes from the rollers. Turn the VGA-76 on and allow nitrogen to flow through the system for 5 min. Turn the VGA-76 off and disconnect it from the Perkin-Elmer 5000. Remove the absorption cell. Soak the absorption cell and gas/liquid separator in 1% HNO_3 overnight. Rinse in Type II water and dry.

8.4.5. Refer to the VGA-76 operation manual for specific details (Source Material 9.5).

8.5. Analyze all Toxicity Characteristic Leaching Procedure (TCLP) extracts, all samples analyzed as part of a delisting petition, and all samples that suffer from matrix interferences by the method of standard additions (see Procedure WI100, Section 4.6).

8.6. Analyses must include 10% duplicates, 10% spiked samples, and 10% quality control samples.

8.7. Calculate metal concentrations (1) by the method of standard additions, (2) from a calibration curve, or (3) directly from the instrument's concentration read-out. All dilution or concentration factors must be used. Concentrations reported for multiphased or wet samples must be appropriately qualified (e.g., 5 μg/g dry weight). Correction for moisture may be calculated using the following equation or from the LOTUS™ program called "HGCALC."

$$C = \frac{C_s \times V}{W \times S} ,$$

where C = concentration of Hg in dried sample (μg/kg),
C_s = concentration of solution (ng/mL),
V = diluted volume (mL),
W = weight of digested sample (g), and
S = percent solids/100.

9. Source Materials

9.1. American Public Health Association, American Waterworks Association, and Water Pollution Control Federation, *Standard Methods for the Examination of Water and Wastewater*, 16th ed., Method 320A (American Public Health Association, Washington, DC, 1980).

9.2. Environmental Monitoring and Support Laboratory, *Methods for Chemical Analysis of Water and Waste*, Method 245.1 (Office of Research and Development, US Environmental Protection Agency, Cincinnati, Ohio, 1983).

9.3. Perkin-Elmer, *Analytical Methods for Atomic Absorption Spectrophotometry* (Perkin-Elmer, Norwalk, Connecticut, 1982).

9.4. "Automated Cold Vapor Determination of Mercury: EPA Stannous Chloride Methodology," Report Number AA-51, Varian Instrument Group, AA Resource Center, Park Ridge, Illinois (1976).

9.5. *Vapor Generator Assembly Operation Manual* (Varian Instrument Group, AA Resource Center, Park Ridge, Illinois, 1976).

9.6. A. Gaskill, "Compilation and Evaluation of RCRA Method Performance Data," Work Assignment No. 2, EPA Contract No. 68-01-7075 (September 1986).

MERCURY IN LEACHATES, WATER, AND WASTE WATER — CVAA

Analyte: Mercury	**Method No.:** WI120
Matrix: Water, waste water, extracts, leachates	**Detection Limit:** 0.2 μg/L **Range:** 0.2 - 4.0 μg/L
Procedure: Cold vapor atomic absorption	**Accuracy and Precision:** 98% ± 15% RSD of EPA WP475/4
Effective Date: 06/17/85	**Author:** Mary Carol Williams

SAFETY NOTE: Before beginning this procedure, read all of the Material Safety Data Sheets for the chemicals listed in Sec. 6. Read Sec. 4.3 of the EM-9 Safety Manual for information on personal protective clothing and equipment.

1. Principle of Method

1.1. Organic and inorganic mercury compounds are broken down and converted to mercuric (Hg^{+2}) ions. The Hg^{+2} ions are reduced to free mercury which is swept into a quartz tube in the light path by nitrogen gas. Absorbance (peak area) is measured at 253.7 nm as a function of mercury concentration.

1.2. An electrodeless discharge lamp is used to provide a source characteristic for each element.

2. Accuracy, Precision, and Percent Recovery

2.1. The determination of Hg in Environmental Protection Agency SRM WP475/4 (0.75 ± 0.22 μg/L) over a period of 12 months (N = 9) had a mean of 0.74 μg/L and a relative standard deviation (RSD) of 15%.

2.2. Fifty-six samples spiked with 10 μg/L of Hg over a period of 12 months had an average recovery of 98% and an RSD of 12%. The percent recovery ranged from 84% to 118%.

3. Interferences

3.1. Possible interference from sulfide (up to 20 mg $S^{=}$/L) is reduced by the addition of potassium permanganate.

3.2. Copper has been reported to interfere. No effect was reported at copper concentrations as high as 10 mg Cu^{+2}/L.

3.3. High chloride interference is reduced by the addition of permanganate. Free chlorine (which absorbs at 253 nm) is released after the addition of hydroxylamine chloride by vigorous stirring.

3.4. Some volatile organics may also absorb at this wavelength. Use of a background corrector is required. A preliminary run without reagents should determine if this type of interference is present.

4. Collection and Storage of Samples

4.1. Samples are collected in polyethylene bottles and are immediately acidified to pH < 2 with concentrated HNO_3.

4.2. Samples must be digested and analyzed within 28 days (see Step 8.2).

5. Apparatus

5.1. Atomic absorption spectrophotometer (AAS): Model 5000, Perkin-Elmer, Norwalk, Connecticut.

5.2. Vapor generator assembly (VGA): with absorption cell and burner head. Model VGA-76, Varian Instrument Group Marketing, Sunnyvale, California.

5.3. Data station: Model 3600, Perkin-Elmer, Norwalk, Connecticut.

5.4. Electrodeless discharge lamp.

5.5. Pipettor: 10-mL Brinkman Macro-transferpettor.

5.6. Volumetric pipettes: class A, various sizes.

5.7. Volumetric flasks: class A, various sizes.

5.8. Disposable polyethylene centrifuge tubes.

5.9. Eppendorf pipettes: 1-mL.

5.10. Repipette dispensers.

6. Reagents

6.1. Nitrogen (100 psi minimum tank pressure and 30-50 psi regulator pressure).

6.2. ASTM Type II water (double-deionized, less than 18 μmhos/cm). Water should be monitored for impurities.

6.3. Sulfuric acid (concentrated, atomic-absorption-grade).

6.4. Nitric acid (concentrated, distilled, reagent-grade).

6.5. Hydrochloric acid (concentrated, distilled, reagent-grade).

6.6. Stannous chloride. Dissolve 250 g of $SnCl_2$ and 200 mL of concentrated HCl in 500 mL of distilled deionized water (DDW) in a 1000-mL volumetric flask. Dilute to volume.

6.7. Sodium chloride-hydroxylamine chloride solution. Dissolve 50 g of sodium chloride and 50 g of hydroxylamine chloride in distilled water and dilute to 500 mL.

6.8. Potassium permanganate (5% solution, w/v). Dissolve 50 g of potassium permanganate in 1 L of distilled water. Store in an amber bottle in the acid cabinet.

6.9. Potassium persulfate (5% solution, w/v). Dissolve 50 g of potassium persulfate in 1 L of distilled water. Store in an amber bottle in the acid cabinet.

6.10. Chromium stock solution (1000 mg/L). Tare a 50-mL volumetric flask. Accurately weigh 141.5 ± 0.2 mg of analytical-grade $K_2Cr_2O_7$ into the flask. Dissolve the salt and dilute the standard to volume with Type II water.

6.11. Mercury spike solution. Add 100 μL of the 1000-mg/L mercury stock standard and 10 mL of the 1000-mg/L chromium stock solution to a 100-mL volumetric flask and dilute to volume with 10% HNO_3.

7. Calibration Standards

7.1. Stock standard A (10 mg/L). Dilute 1.0 mL of the 1000-mg/L mercury stock standard to 100 mL with 1% HNO_3. Store in a light-protected flask.

7.2. Stock standard B (0.1 mg/L). Dilute 1.0 mL of stock standard A to 100 mL with 1% HNO_3.

7.3. Working standards. Add the following volumes of stock standard B to approximately 25 mL of 1% HNO_3 in a 100-mL centrifuge tube or volumetric flask. Continue as with samples.

Stock Standard B (μL)	Mercury (μg/L)
250	0.5
500	1.0
1000	2.0
2000	4.0

7.4. The AAS is calibrated in concentration mode using one or two standards. Standard 1 must be in the linear range (<0.25 absorbance units) and standard 2 is normally twice standard 1. Lower-concentration standards are read as samples.

8. Procedure

8.1. Instrument setup.

8.1.1. Optimize the AAS instrument. Align the absorption cell using an iron hollow cathode lamp (for brightness). See the VGA-76 operational manual for details (Source Material 10.5).

8.1.2. Using **SET UP**, adjust the mercury lamp position to its peak value. If the peak value reads 99, push **GAIN** to reset to midrange.

8.1.3. The following values are keyed in on the keyboard.

- Wavelength — 253.7 nm (AA-BG)
- Slit width — 0.7 nm
- Concentration of standard — 4.000 μg/L for water
- Read time — 6.0 s
- Peak area mode
- Average of three readings

8.2. Sample preparation.

8.2.1. Acidify samples to pH < 2 immediately after collection by the addition of 2.5 mL of concentrated HNO_3 per liter.

8.2.2. To a 50-mL centrifuge tube or volumetric flask, add 25 mL of acidified sample or standard, 2.5 mL of concentrated H_2SO_4, and 1.25 mL of concentrated HNO_3, mixing after each addition. To spike samples, add 100 μL of mercury spike solution (Step 6.11) to 25 mL of sample in a 50-mL centrifuge tube or volumetric flask. Continue as with other samples.

8.2.3. Add 7.5 mL of potassium permanganate ($KMnO_4$) solution and mix well. Let stand for 15 min.

8.2.4. Add additional $KMnO_4$ as necessary until the purple color persists for at least 15 min. Add 4.0 mL of potassium persulfate and heat for 2 h in a 95°C water bath or preheated aluminum block.

8.2.5. Cool and add 2.5 mL of sodium chloride-hydroxylamine chloride to reduce the excess permanganate. Swirl gently.

8.2.6. Dilute to volume with 1% HNO_3. Mix solution gently until gas evolution ceases.

8.2.7. At least 10% quality control and 10% spiked and duplicate samples must also be analyzed.

8.3. Vapor generator setup.

8.3.1. Fill reagent containers A and B with stannous chloride solution and DDW respectively. Engage the pump tubes and turn the VGA-76 on.

8.3.2. Aspirate DDW in reagent and sample tubes for 1 min, press **READ** and autozero the instrument.

8.3.3. Place the reagent tubes in respective reagents and read the resulting blank absorbance after 1 min. If this reading is greater than 0.10 absorbance units, the reagents are contaminated and need to be remade. If the blank is less than 0.1 absorbance units, set **AZ**.

8.3.4. Aspirate calibration standards (lowest to highest) and check linearity, characteristic mass, and repeatibility with previous analyses.

8.3.5. Push **PEAK AREA** and rerun blank and calibration standards, quality control samples, and samples. Always wait 45 - 60 s after sample introduction before reading concentrations so that the system can stabilize. Record concentrations in bound Laboratory notebook.

8.3.6. After analyses are completed, flush the system with DDW for 5 min. Turn the VGA-76 off and remove the pump tubes from the rollers. Turn the VGA-76 on and allow nitrogen to flow through the system for 5 min. Turn the VGA-76 off and disconnect it from the Perkin-Elmer 5000. Remove the absorption cell. Soak the absorption cell and gas/liquid separator in 1% HNO_3 overnight. Rinse with DDW and dry.

8.3.7. Refer to the VGA-76 operation manual for specific details (Source Material 10.5).

9. Calculations

9.1. Most samples will read undiluted. Because both standards and samples are treated identically and the AAS is calibrated for concentration, the concentration of the sample can be read directly from the console.

9.2. Spike recovery.

9.2.1. Subtract the measured concentration of the sample from the measured concentration of the spike to get the amount recovered. The spike added is 1.0 μg/L.

9.2.2. The percent recovery must be within the range of 80%-120%, preferably 90%-110%.

$$\% \text{ Recovery} = \frac{\text{amount recovered} \times 100}{\text{amount added}}$$

10. Source Materials

10.1. American Public Health Association, American Waterworks Association, and Water Pollution Control Federation, *Standard Methods for the Examination of Water and Wastewater*, 16th ed., Method 320A (American Public Health Association, Washington, DC, 1980).

10.2. Environmental Monitoring and Support Laboratory, *Methods for Chemical Analysis of Water and Waste*, Method 245.1 (Office of Research and Development, US Environmental Protection Agency, Cincinnati, Ohio, 1983).

10.3. Perkin-Elmer, *Analytical Methods for Atomic Absorption Spectrophotometry* (Perkin-Elmer, Norwalk, Connecticut, 1982).

10.4. "Automated Cold Vapor Determination of Mercury: EPA Stannous Chloride Methodology," Report Number AA-51, Varian Instrument Group, AA Resource Center, Park Ridge, Illinois (1976).

10.5. *Vapor Generator Assembly Operation Manual*, (Varian Instrument Group, AA Resource Center, Park Ridge, Illinois, 1976).

AMMONIA IN WATER AND WASTE WATER — FLOW INJECTION

Analyte: Ammonia nitrogen	**Method No.:** WI200
Matrix: Water and waste water	**Range:** 0.01 - 2.0 mg/L
Procedure: Flow injection colorimetry	**Detection Limit:** 0.01 mg/L
	Accuracy and Precision: 94% ± 2% RSD
Effective Date: 09/16/86 to 01/01/92	**Author:** Mary Carol Williams

SAFETY NOTE: Before beginning this procedure, read all of the Material Safety Data Sheets for the chemicals listed in Sec. 6. Read Sec. 4.3 of the EM-9 Safety Manual for information on personal protective clothing and equipment.

1. Principle of Method

1.1. Water solutions are acidified to pH <2 with concentrated sulfuric acid immediately upon collection.

1.2. Samples are diluted with 0.1% sulfuric acid to read <0.50 mg/L.

1.3. The complexing agent (citrate-tartrate) is added to the sample to prevent the precipitation of metal hydroxides.

1.4. The addition of alkaline phenol followed by sodium hypochlorite produces an indophenol compound whose blue color is intensified by the addition of nitroprusside.

1.5. A 60°C heating bath is used to increase the reaction rate.

1.6. A 630-nm interference filter is used to discriminate the resulting blue color.

2. Accuracy and Precision

2.1. The determination of NH_3-N in five Environmental Protection Agency WP284/4 reference samples (1.90 ± 0.22 mg/L) over a period of 2 months had a mean of 1.78 mg/L and a standard deviation of ± 0.038 mg/L at the 1σ level.

2.2. Three samples spiked with 8.0 mg/L of NH_3 over a period of 2 months had an average recovery of 101% with a relative standard deviation (RSD) of 1.4%. The recoveries ranged from 100% to 103%.

3. Interferences

3.1. Ammonia-laden air gives high blanks and high sample results.

3.2. Metal ions may precipitate as hydroxides if not masked.

3.3. Sample turbidity and color may interfere. Turbidity must be removed by filtration before analysis.

4. Collection and Storage of Samples

4.1. Collect samples in polyethylene bottles and immediately acidify to pH <2 with concentrated H_2SO_4. Ammonia is lost readily at neutral or basic pHs. Refrigerate samples pending analysis. The holding time may not exceed 28 days.

5. Apparatus

5.1. Automatic sampler: Catalog No. 1100-100, QuikChem Systems, Lachat Instruments, Milwaukee, Wisconsin.

5.2. Sampler/valve controller: Catalog No. 1600-000, QuikChem Systems, Lachat Instruments, Milwaukee, Wisconsin.

5.3. Injection module—dual valve: Catalog No. 1000-600, equipped with sampler timer, QuikChem Systems, Lachat Instruments, Milwaukee, Wisconsin.

5.4. Multidetector chassis: Catalog No. 1300-000, equipped with visible colorimeter, Catalog No. 1301-000, QuikChem Systems, Lachat Instruments, Milwaukee, Wisconsin.

5.5. Proportioning pump: Catalog No. 1200-000, QuikChem Systems, Lachat Instruments, Milwaukee, Wisconsin.

5.6. Ammonia manifold: Catalog No. 10-107-06-1-A, QuikChem Systems, Lachat Instruments, Milwaukee, Wisconsin.

5.7. Heating bath with circulator: Catalog No. 1000-500, QuikChem Systems, Lachat Instruments, Milwaukee, Wisconsin.

5.8. Gilson dual-pen strip-chart recorder: Model N2, Gilson Medical Electronics, Denver, Colorado.

5.9. Pipettes: class A, volumetric, various sizes.

5.10. Pipettes: 1-mL, Eppendorf.

5.11. Flasks: class A, volumetric, various sizes.

5.12. Glass filter: Whatman, GF/C.

5.13. Bottles: polyethylene, various sizes.

5.14. Bottles: 1-L, clear amber glass.

6. Reagents

NOTE: All reagents should be degassed with helium before use.

6.1. Distilled deionized water (DDW). Pass distilled water through an ion exchange column containing a mixture of both acidic cation and basic cation exchange resins. All solutions must be made using ammonia-free water.

6.2. Complexing reagent. Dissolve 16.5 g of potassium sodium tartrate and 12.0 g of sodium citrate in 450 mL DDW. Dilute to 500 mL. The reagent is stable for 2 months.

6.3. Alkaline phenol. Dissolve 21.0 g of crystalline phenol in 100 mL DDW. Slowly add 8.0 g of sodium hydroxide. Periodically cool the flask under running water. Dilute to 250 mL. Filter through a Whatman GF/C glass filter. Make fresh weekly.

6.4. Sodium hypochlorite. Dilute 100 mL of commercial bleach (5.25% chlorine) to 200 mL with DDW. Prepare fresh daily.

6.5. Sodium nitroprusside. Dissolve 0.25 g of sodium nitroprusside in DDW. Dilute to 500 mL. The reagent is stable for 2 months.

6.6. Sulfuric acid (concentrated, reagent-grade).

6.7. Diluent (0.2% H_2SO_4). Add 2.0 mL of concentrated sulfuric acid to 500 mL of DDW. Dilute to 1 L.

7 Calibration and Standards

7.1. NH_3-N stock standard A (1000 mg/L). Add 2.0 mL of concentrated H_2SO_4 to 900 mL of DDW in a 1-L volumetric flask. Add 4.717 g of ammonium sulfate [$(NH_4)_2SO_4$] dried at 105°C for 1 h. Dilute to volume. Refrigerate in an amber bottle.

7.2. NH_3-N stock standard B (200 mg/L). Dilute 50 mL of stock standard A to 250 mL with 0.1% H_2SO_4. Store in an amber bottle. Make fresh every 6 months.

7.3. NH_3-N stock standard C (20 mg/L). Dilute 20.0 mL of stock standard B to 100 mL with 0.1% H_2SO_4. Prepare fresh daily.

7.4. Working standards. Pipette the following volumes of stock standard C into 100-mL volumetric flasks. Dilute to volume with 0.1% H_2SO_4. Prepare fresh daily.

Stock Standard C (mL)	NH_3-N (mg/L)
1.0	0.2
2.0	0.4
4.0	0.8
6.0	1.2
8.0	1.6
10.0	2.0

7.5. Set the base line to zero using the zero knob on the colorimeter while pumping DDW instead of sample and with all pump tubes in their respective reagents. Set the highest-concentration standard at 100 on the chart paper using the gain knob. Lower-concentration standards should read at 80, 60, 40, 20, and 10 respectively. Record chart reading of standards in a Laboratory notebook.

8. Procedure

8.1. Turn on the detector, heating bath, injection module, timer, and valve controller and allow to warm up for 30 min. Place the sampler wash line in distilled water and the waste lines in the proper waste container.

8.2. Place the ammonia manifold in the valve controller chassis and attach the sample loop between the No. 1 and No. 4 ports. Attach the sampler wash line at the No. 6 port and the carrier line at the No. 2 port. The lines from the No. 3 and No. 5 ports go to the manifold and pump respectively. When operating in dual-channel mode, the No. 5 port of channel 1 connects to the No. 6 port of channel 2.

8.3. Set up the manifold, injection loop, and reagent and waste lines. Set the interference filter at 630 nm and the flow cell to 10 mm and 80 μL. Set the injection timing as follows:

- Pump speed 35
- Cycle period 50 s
- Load period 30 s

- Inject period 20 s
- Sample loop 150 cm

8.4. Stretch the pump tubes across pump cassettes and snap cassettes into place. Lift the tension adjustment levers straight up. Check for system leaks or bubbles.

8.5. Place wash, carrier, and reagent lines in proper receptacles and pump until a stable base line is established. Set colorimeter and recorder to zero base line. The recorder is normally run at 100X and 20 mV with a chart speed of 0.1 mm/s. Set the gain on the colorimeter to 500.

8.6. Rinse all glassware used in preparation of reagents, standards, and sample dilutions with distilled water before use. Sample cups should be rinsed with diluted sample twice before final filling. Environmental and drinking water samples are read undiluted.

8.7. Load the carousel. Place duplicate aliquots of the six standards in positions 1-10 (highest concentration to lowest). Place duplicate aliquots of the blank, quality control samples, and samples to be analyzed beginning at position 13. The sample load must include at least 10% spikes and 10% quality control samples. To spike a sample, add 1.0 mL of NH_3-N stock standard B to 25 mL of sample. Dilute appropriately. Place blanks in positions 19 and 20 to check base-line drift. If a second carousel is required, place midrange standards in positions 1 and 2. If this standard does not agree to within ± 2 chart divisions with the previous run, the complete set of standards must be rerun.

8.8. When determinations are completed, place the reagent tubes in distilled water and rinse the system for a minimum of 10 min. After rinsing, remove the wash, carrier, and reagent lines from the water and pump air until all visible liquid is removed from the system. Remove the pump cassettes and shut off power to all units.

8.9. Record chart readings in a Laboratory notebook. The duplicate readings are normally recorded and reported. A very high sample, however, may bias the first peak of a low sample that follows. In this case both values are recorded, but only the second peak value is reported.

9. Calculations

9.1. Individual values for standards and samples are entered into the LSQ program in the VAX under the EM-9 LIMS MISCELLANEOUS MENU to obtain the actual values for the samples. A typical terminal session is shown below.

EM-9 LIMS MISCELLANEOUS MENU

A. MEAN
B. STDDEV (standard deviation)
C. ALLDATA-SEARCH (ARCHIVE-SEARCH)
D. QA-HELP
G. LINREG - Linear Regression
H. POLY - Polynomial fitting
I. LSQ - Least Squares fitting
Y. RETURN TO MAIN LIMS MENU
Z. EXIT FROM LIMS. RETURN TO YOUR USER PROMPT

Enter the LETTER of your choice and <CR>
I

ENTER # OF PTS, MAXDEG (UP TO 2)
12, 2

PLOT TYPE: LIN=1, LOGX=2, LOGY=3, LOGXY=4
1

FORCE CURVE THROUGH ZERO? YES=1, NO=0
1

ENTER RESULT-&-STANDARD PAIRS, ONE AT A TIME:

100, 2.0
100, 2.0
80.5, 1.6
81.0, 1.6
61.5, 1.2
61.0, 1.2
41.0, 0.8
41.5, 0.8
21.5, 0.4
21.5, 0.4
11.5, 0.2
11.0, 0.2

CONSTANT = -0.78261E-11
1 ST POWER = 0.55435-02
2 ND POWER = 0.48913E-04

EVALUATE SINGLE VALUES? YES=1 NO=0
1

ENTER # PTS TO EVALUATE, THEN SAMPLE RESULT ONE AT A TIME.
2
51.0
7.0

MEASURED	ACTUAL VALUE
51.00000	0.98900
7.00000	0.13200

9.2. NH_3-N spike recovery should be 8 mg/L ± 0.8 (allowable) or ± 0.4 (desirable).

$$R = Cs - C \quad ,$$

where R = amount recovered (mg/L),
Cs = concentration of spiked sample (mg/L), and
C = concentration of unspiked sample (mg/L).

9.3. Percent recovery should be between 85% and 115%.

$$\%R = \frac{R \times 100}{A} \quad ,$$

where %R = percent recovery,
R = amount recovered (mg/L), and
A = amount added (mg/L).

10. Source Materials

10.1. QuikChem Method No. 10-107-06-1-B (Lachat Instruments, Milwaukee, Wisconsin, 1986).

10.2. American Public Health Association, American Waterworks Association, and Water Pollution Control Federation, *Standard Methods for the Examination of Water and Wastewater*, 16th ed., Method 417F (American Public Health Association, Washington, DC, 1985).

10.3. Environmental Monitoring and Support Laboratory, *Methods for Chemical Analysis of Water and Waste*, Method 350.1 (Office of Research and Development, US Environmental Protection Agency, Cincinnati, Ohio, 1983).

AMMONIA NITROGEN IN WATER AND WASTE WATER — AUTO ANALYZER

Analyte: Ammonia Nitrogen	**Method No.:** WI210
Matrix: Water and waste water	**Range:** 0.01 - 0.5 mg/L
Procedure: Automated colorimetry	**Detection Limit:** 0.01 mg/L
	Accuracy and Precision: 96% ± 5% RSD
Effective Date: 02/06/84 to 01/01/90	**Author:** Mary Carol Williams

SAFETY NOTE: Before beginning this procedure, read all of the Material Safety Data Sheets for the chemicals listed in Section 6. Read Section 4.3 of the HSE-9 Safety Manual for information on personal protective clothing and equipment.

1. Principle of Method

1.1. Water solutions are acidified to pH <2 with concentrated sulfuric acid immediately upon collection.

1.2. Samples are diluted with 0.1% sulfuric acid to read <0.50 mg/L.

1.3. The complexing agent (citrate-tartrate) is added to the sample to prevent the precipitation of metal hydroxides.

1.4. The addition of alkaline phenol followed by sodium hypochlorite produces an indophenol compound whose blue color is intensified by the addition of nitroprusside.

1.5. A 50°C heating bath is used to increase the reaction rate.

1.6. A 630-nm interference filter is used to discriminate the resulting blue color.

2. Accuracy and Precision

2.1. The determination of NH_3-N in 60 EPA WP481/2 reference samples (1.52 ± 0.09 mg/L) over a period of 12 months had a mean of 1.46 mg/L and a relative standard deviation of 5%.

2.2. The relative standard deviation of 71 composite determinations made over a period of 12 months was 4% at the 13 mg/L level.

2.3. Forty-five NH_3-N samples spiked at 4.0 mg/L over a period of 12 months gave an average recovery of 96% with a relative standard deviation of 8%. The recoveries ranged from 83% to 120%.

3. Interferences

3.1. Ammonia-laden air gives high blanks and high sample results.

3.2. Metal ions may precipitate as hydroxides if not masked.

3.3. Sample turbidity and color may interfere. Turbidity must be removed by filtration before analysis.

4. Collection and Storage of Samples

4.1. Collect samples in polyethylene bottles and immediately acidify to pH <2 with concentrated H_2SO_4. Refrigerate samples pending analysis. Analysis must be completed within 28 days.

5. Apparatus

5.1. Sampler IV: equipped with a 40-slot sample carousel and a 60/h, 6:1 sampling cam, Technicon, Tarrytown, New York.

5.2. Proportioning pump: Technicon, Tarrytown, New York.

5.3. Ammonia manifold: equipped with pump tubes, mixing coils, double delay coil, and 50°C heating bath, Technicon, Tarrytown, New York.

5.4. Colorimeter: equipped with 630-mm filter and 50- by 1.5-mm flow cell, Technicon, Tarrytown, New York.

5.5. Dual pen strip chart recorder: Technicon, Tarrytown, New York.

5.6. Pipettes: Class A, volumetric, various sizes.

5.7. Pipettes: 1-mL, Eppendorf.

5.8. Flasks: Class A, volumetric, various sizes.

5.9. Bottles: 1-L, clear and amber glass.

5.10. Glass filter: Whatman, GF/C.

6. Reagents

6.1. Distilled deionized water (DDW). Pass distilled water through an ion exchange column containing a mixture of both acidic cation and basic cation exchange resins. All solutions must be made using ammonia-free water.

6.2. Brij-35 (30% solution). Technicon, Tarrytown, New York.

6.3. Complexing reagent. Dissolve 16.5 g potassium sodium tartrate and 12.0 g sodium citrate in 450 mL DDW. Dilute to 500 mL. Add 0.25 mL Brij. The reagent is stable for 2 months.

6.4. Alkaline phenol. Dissolve 21.0 crystalline phenol in 100 mL DDW. Slowly add 8.0 g of sodium hydroxide. Periodically cool the flask under running water. Dilute to 250 mL. Filter through a Whatman GF/C glass filter. Make fresh weekly.

6.5. Sodium hypochlorite. Dilute 100 mL of commercial bleach (5.25% chlorine) to 200 mL with DDW. Make fresh daily.

6.6. Sodium nitroprusside. Dissolve 0.25 g sodium nitroprusside in DDW. Dilute to 500 mL. Add 0.25 mL Brij. The reagent is stable for 2 months.

6.7. Sulfuric acid (concentrated, reagent-grade).

6.8. Diluent (0.2% H_2SO_4). Add 2.0 mL concentrated sulfuric acid to 500 mL of DDW. Dilute to 1 L.

6.9. Air scrubber solution (5 N H_2SO_4). Carefully add 35 mL of concentrated H_2SO_4 to approximately 200 mL of ammonia-free DDW. Cool to room temperature and dilute to 250 mL with DDW.

7. Calibration and Standards

7.1. NH_3-N stock standard A (1000 mg/L). Add 2.0 mL of concentrated H_2SO_4 to 900 mL of distilled water in a 1-L volumetric flask. Add 4.717 g ammonium sulfate [$(NH_4)_2SO_4$] dried at 105°C for 1 h. Dilute to volume. Refrigerate in an amber bottle.

7.2. NH_3-N stock standard B (100 mg/L). Dilute 25 mL of stock standard A to 250 mL with 0.2% H_2SO_4. Store in an amber bottle. Make fresh every 6 months.

7.3. NH_3-N stock standard C (5 mg/L). Dilute 5.0 mL of stock standard B to 100 mL with 0.2% H_2SO_4. Prepare fresh daily.

7.4. Working standards. Pipette standard C into a 100-mL volumetric flask. Dilute to volume with 0.2% H_2SO_4. Prepare fresh daily.

Standard C (mL)	NH_3-N (mg/L)
2.0	0.1
4.0	0.2
6.0	0.3
8.0	0.4
10.0	0.5

7.5. Set the base line to zero using the base line control knob on the colorimeter while pumping 0.2% H_2SO_4 instead of sample and with all pump tubes in their respective reagents. Set the highest concentration standard at 100 on the chart paper using the std. cal. knob. Lower concentration standards should read at 80, 60, 40, and 20 respectively. Record chart reading of standards in a Laboratory notebook.

8. Procedure

8.1. Turn on the colorimeter, heating bath, and recorder and allow to warm up for 30 min. Use 0.2% H_2SO_4 in the wash receptacle.

8.2. Attach the ammonia manifold in line between the pump and colorimeter. Attach air lines to the segmenter tubes on the pump. Intake air should be scrubbed through 5 N H_2SO_4 to remove ammonia from the air. Stretch the pump tubes across the brackets. Snap the paten into place. The pump will turn on automatically. Place reagent lines in distilled water and allow the system to wash for 20 min.

8.3. Place lines into the proper reagents and allow the pump to run until a steady base line is achieved. Set the base line to zero. Check the system for a uniform bubble pattern, leaks, and adequate reagent supply.

8.4. Rinse all glassware used for preparation of reagents, standards, and sample dilutions with distilled water before use. Sample cups should be rinsed with diluted sample twice before final filling.

8.5. Dilute samples from TA-50 1:50 (2 mL to 100 mL) and samples from DP site 1:5 (5 mL to 25 mL). Environmental and drinking water samples are read undiluted. The sample load must include at least 10% spikes, 10% duplicates, and 10% quality control samples. To spike a sample, add 1.0 mL of the 100 mg/L NH_3-N standard to 25 mL of sample. Dilute appropriately. Concentration of the spike is 4.0 mg/L. Dilution adjustment may be necessary as evident on the strip chart output. Samples reading <10 on the chart should be rerun at higher concentration if possible.

8.6. Load the carousel. Place duplicate standards in positions 1-10 (highest concentration to lowest). Place duplicate sample aliquots in the carousel in the following order: quality control samples, weeklies, EPA grabs, plating bath, and, rarely, drinking water. Place blanks in positions 19 and 20 to check base line drift. Insert a pin at the last position to automatically stop the carousel. If a second carousel is required, place a midrange standard in positions 1 and 2 to check reproducibility of the calibration curve. If this standard does not agree within ± 2 chart divisions of the previous run, the complete set of standards must be rerun.

8.7. When determinations are completed, place the reagent tubes in distilled water and rinse the system for a minimum of 10 min. Shut off power to the heating bath, colorimeter, and recorder. After rinsing, remove the reagent and wash tubes from the water and pump air until all visible liquid is removed from the system. Shut down the pump by removing the paten. Release the pump tubes from the brackets.

9. Calculations

9.1. Record chart readings in a Laboratory notebook. The duplicate readings are normally recorded and reported. A very high sample, however, may bias the first peak of a low sample that follows. In this case both values are recorded, but only the second peak value is reported.

9.2. The factor to convert from chart reading to concentration can be calculated as follows:

$$F = \frac{Sc}{100} \quad ,$$

where F = factor and
Sc = concentration of highest standard (mg/L).

$$C = F \times R \times D \quad ,$$

where C = concentration of sample (mg/L),
F = factor,
R = chart reading, and
D = dilution.

9.3. NH_3-N spike recovery should be 4.0 mg/L ± 0.8 (allowable) ± 0.4 (desirable).

$$R = Cs - C \quad ,$$

where R = amount recovered (mg/L),
Cs = concentration of spiked sample (mg/L), and
C = concentration of unspiked sample (mg/L).

9.4. Percent recovery should be between 85% and 115%.

$$\%R = \frac{R \times 100}{A} \quad ,$$

where %R = percent recovery,
R = amount recovered (mg/L), and
A = amount added (mg/L).

10. Source Materials

10.1. Technicon Industrial Method No. 154-71 W/B (Tarrytown, New York, 1978).

10.2. American Public Health Association, American Water Works Association, and Water Pollution Control Federation, *Standard Method for the Examination of Water and Wastewater*, 16th ed., Method 417F (American Public Health Association, Washington, DC, 1985).

10.3. Environmental Monitoring and Support Laboratory, *Methods for Chemical Analysis of Water and Waste*, Method 350.1, (Office of Research and Development, U.S. Environmental Protection Agency, Cincinnati, Ohio, 1983).

BORON IN NATURAL AND GEOTHERMAL WATERS — FLOW INJECTION*

Analyte: Boron	**Method No.:** WI220
Matrix: Natural and geothermal waters	**Range:** 0.1 - 6.0 mg/L
	Detection Limit: 0.1 mg/L
Procedure: Flow injection calorimetry	**Accuracy and Precision:** 98% ± <1% RSD
Effective Date: 12/09/86 to 01/01/93	**Author:** Kathleen Straw

SAFETY NOTE: Before beginning this procedure, read all of the Material Safety Data Sheets for the chemicals listed in Sec. 6. Read Sec. 4.3 of the EM-9 Safety Manual for information on personal protective clothing and equipment.

1. Principle of Method

1.1. Boric acid increases the dissociation of azomethine-H. The yellow color at 430 nm is proportional to the boron concentration.

2. Accuracy and Precision

2.1. The determination of boron in 25 in-house quality control samples (5.00 ± 0.50 mg/L) over a period of 2 years had a mean of 4.93 mg/L and a relative standard deviation (RSD) of 2%.

2.2. Eighteen samples spiked with 2.00 mg/L of boron over 2 years resulted in an average recovery of 98% and an RSD of <1%. Percent recovery ranged from 87% to 106%.

3. Interferences

3.1. Color and turbidity interfere with this method. Iron in concentrations exceeding that of boron by a factor of 200 results in elevated boron yields. Zinc in concentrations exceeding that of boron by more than a factor of 20 suppresses response.

3.2. Variances in pH will affect the equilibrium of dissociation.

*This procedure has been substantially revised. Therefore, individual changes are not highlighted, as they are in other revised procedures.

3.3. The ethylenediaminetetraacetic acid (EDTA) in the buffer/masking reagent complexes the interferents aluminum, copper, iron, and zinc.

4. Collection and Storage of Samples

4.1. Nonacid samples must be collected and stored in polyethylene bottles at 4°C. Samples are filtered.

4.2. Complete analysis within six months.

5. Apparatus

5.1. Automatic sampler: Catalog No. 1100-100, QuikChem Systems, Lachat Chemicals, Inc., Milwaukee, Wisconsin.

5.2. Sampler/valve controller: Catalog No. 1600-000, QuikChem Systems, Lachat Chemicals, Inc., Milwaukee, Wisconsin.

5.3. Injection module — dual valve: Catalog No. 1000-600, equipped with 0.8-mm-i.d. sample loops 120- and 200-cm long and with a sampler timer, QuikChem Systems, Lachat Chemicals, Inc., Milwaukee, Wisconsin.

5.4. Multidetector chassis: Catalog No. 1300-000, with visible colorimeter, Catalog No. 1301-000, QuikChem Systems, Lachat Chemicals, Inc., Milwaukee, Wisconsin.

5.5. Proportioning pump: Catalog No. 1200-000, QuikChem Systems, Lachat Chemicals, Inc., Milwaukee, Wisconsin.

5.6. Boron manifold: Catalog No. 10-105-08-1-B, QuikChem Systems, Lachat Chemicals, Inc., Milwaukee, Wisconsin.

5.7. Gilson dual-pen strip-chart recorder: Model N2, Gilson Medical Electronics, Denver, Colorado.

5.8. Pipettes: Class A, volumetric, various sizes.

5.9. Flasks: Class A, volumetric, various sizes, Nalgene.

5.10. Pipette: 1000-μL, Eppendorf.

5.11. Bottles: 1-L, polyethlene.

5.12. Beakers: 50-mL, disposable polyethylene.

6. Reagents

NOTE: Prepare and store all reagents in polyethylene to avoid contamination from borosilicate glass. Use distilled deionized water (DDW).

6.1. Buffer/masking reagent. Dissolve 132 g of ammonium phosphate dibasic, $(NH_4)_2HPO_4$, and 25 g of disodium EDTA dihydrate in approximately 400 mL of water in a 1-L volumetric flask. Dilute to volume and invert three times. This solution is stable for 6 months. Filter just prior to use.

6.2. Azomethine-H color reagent. Dissolve 1.25 g of azomethine-H (Sigma or Pierce) and 2.0 g of ascorbic acid in approximately 70 mL of water in a 250-mL volumetric flask. Dilute to volume and mix with a magnetic stirrer about 2 h before use. This reagent is stable for 2 days.

7. Calibration and Standards

7.1. Boron stock standard A (1000 mg/L). Use a Fisher certified standard or dissolve 2.858 g of reagent-grade boric acid (H_3BO_3) in 500 mL of distilled water. Store in a polyethylene bottle. This solution is stable for 12 months.

7.2. Boron stock standard B (100 mg/L). Dilute 25.0 mL of 1000-mg/L stock standard A to 250 mL with DDW.

7.3. Boron stock standard C (10.0 mg/L). Dilute 5.0 mL of 1000-mg/L stock standard A to 500 mL with DDW.

7.4. Low-level (0.1- to 2.0-mg/L) boron calibration standards.

7.4.1. Add the following volumes of boron stock standard C (10.0 mg/L) to 100-mL volumetric flasks. Dilute to volume with DDW.

Stock Standard C (mL)	Boron (mg/L)
20.0	2.0
15.0	1.5
10.0	1.0
5.0	0.5
2.0	0.2
1.0	0.1

7.5. High-level (0.5- to 6.0-mg/L) boron calibration standards.

7.5.1. Add the following volumes of boron stock standard B (100.0 mg/L) to 100-mL volumetric flasks. Dilute to volume with DDW.

Stock Standard B (mL)	Boron (mg/L)
6.0	6.0
4.0	4.0
2.0	2.0
1.0	1.0
0.5	0.5

8. Procedure

8.1. Inspect modules for proper connections.

8.2. Turn on power and all modules, except sampler.

8.3. Insert 430-nm interference filter.

8.4. Set up timing and insert sample loop as follows.

	High range (0.5-6.0 mg/L)	Low range (0.1-2.0 mg/L)
Pump speed	35	35
Load period	25 s	25 s
Injection period	30 s	42 s
Sample loop	120 cm, 0.8 mm i.d.	120 cm, 0.8 mm i.d.

8.5. Place reagent feedlines into proper containers. Raise tension levers on pump tube cassettes.

8.6. Pump system until a stable base line is attained.

8.7. Set zero on colorimeter. Manually inject a high standard to set the gain on the colorimeter.

8.8. Place calibration standards and blank in the sample tray in descending order of concentration followed by unknowns and check standards.

8.9. At the end of the run, place all feedlines in distilled deionized water, flush system, and pump dry.

8.10. Turn off the pump and all modules, and release levers on the pump tube cassettes.

9. Calculations

9.1. Plot standards to check for linearity.

9.2. Concentrations of samples may be taken from the plot or calculated from a linear regression program (LSQ on the VAX).

9.3. Spike samples as follows:

Low range — Add 2.0 mL of boron stock standard C (10.0 mg/L) to a total volume of 50.0 mL. The spike concentration is 0.4 mg/L.

High range — Add 1.0 mL of boron stock standard B (100.0 mg/L) to a total volume of 100.0 mL. The spike concentration is 1.0 mg/L.

9.4. Boron spike recovery should be 0.40 ± 0.06 mg/L.

$$R = Cs - C \quad ,$$

where R = amount recovered (mg/L),
Cs = concentration of spiked sample (mg/L), and
C = concentration of unspiked sample (mg/L).

9.5. Percent recovery should be between 85% and 115%.

$$\%R = \frac{(Cs - C) \times 100}{A} \quad ,$$

where %R = percent recovery,
Cs = concentration of spiked sample (mg/L),
C = concentration of sample (mg/L), and
A = amount added (mg/L).

10. Source Materials

10.1. R. A. Edwards, *Analyst* **105**, 139 (1980).

10.2. R. R. Spencer and D. E. Erdmann, *ES&J* **13**, 954 (1979).

10.3. F. J. Krug, J. Mortalli, L. C. R. Pessenda, E. A. G. Gagatto, and H. Bergamin, *Anal. Chim. Acta* **125**, 29 (1981).

10.4. R. Cappelle, *Anal. Chim. Acta* **24**, 55 (1961).

CHEMICAL OXYGEN DEMAND IN WATER AND WASTE WATER — AUTO ANALYZER OR MANUAL

Analyte: Chemical oxygen demand	**Method No.:** WI230
Matrix: Water and waste water	**Range:** 10 - 500 mg/L
Procedure: Automated colorimetry	**Detection Limit:** 10 mg/L
	Accuracy and Precision: 97% ± 4% RSD
Effective Date: 04/29/86	**Author:** Mary Carol Williams

SAFETY NOTE: Before beginning this procedure, read all of the Material Safety Data Sheets for the chemicals listed in Sec. 6. Read Sec. 4.3 of the EM-9 Safety Manual for information on personal protective clothing and equipment.

1. Principle of Method

1.1. The sample is refluxed with hot sulfuric acid and a known excess of potassium dichromate to oxidize organic matter. The amount of Cr^{+3} is directly proportional to the organic matter originally present.

1.2. Silver sulfate may be used as a catalyst.

1.3. The complexing agent, mercuric sulfate, may be added to the sample to prevent chloride interference.

1.4. A 600-nm interference filter is used to discriminate the resulting color.

2. Accuracy and Precision

2.1. Auto analyzer procedure.

2.1.1. The determination of chemical oxygen demand (COD) in 15 Environmental Protection Agency (EPA) WP782/4 reference samples (232 ± 35 mg/L) over a period of 4 months had a mean of 225 mg/L and a relative standard deviation (RSD) of 4%.

2.1.2. Nine COD samples spiked at 40 mg/L over a period of 4 months gave an average recovery of 100% with an RSD of 11%. The recoveries ranged from 88% to 110%.

2.2. Manual procedure.

2.2.1. The determination of COD in 26 EPA WP782/4 reference samples (232 ± 35 mg/L) over a period of 8 months had a mean of 220 mg/L and an RSD of 14%.

2.2.2. Thirty-one COD samples spiked at 40 mg/L over a period of 4 months gave an average recovery of 96% with an RSD of 9.5%. The recoveries ranged from 78% to 120%.

3. Interferences

3.1. Traces of organic material from sampling bottles, glassware, the atmosphere, or reagents may cause gross positive error. Rinse all glassware with 20% H_2SO_4 to reduce contamination.

3.2. Volatile materials may be lost when the sample temperature rises during the sulfuric acid addition step. Minimize this loss by cooling the culture tube during addition of the sulfuric acid solution.

3.3. Chlorides are quantitatively oxidized by dichromate and represent a positive interference. The complexation of the chlorides by the addition of mercuric sulfate eliminates this interference.

3.4. Nitrite exerts a COD of 1.1 mg oxygen per mg nitrite. This interference is usually insignificant because of low nitrite levels.

3.5. Reduced inorganic species, such as iron and sulfide, are oxidized quantitatively under test conditions.

3.6. Volatile straight-chain aliphatic compounds are not oxidized to any appreciable extent.

4. Collection and Storage of Samples

4.1. Collect samples in polyethylene bottles and immediately acidify to pH <2 with concentrated H_2SO_4. Store at 4°C.

4.2. Analyze biologically active samples as soon as possible.

4.3. Mix well samples containing visible particulates to permit removal of representative aliquots.

5. Apparatus

5.1. Sampler IV: equipped with a 40-slot sample carousel and a 40/h, 3:1 sampling cam. Technicon, Tarrytown, New York.

5.2. Proportioning pump: Technicon, Tarrytown, New York.

5.3. COD manifold: equipped with pump tubes, mixing coils, and double delay coil. Technicon, Tarrytown, New York.

5.4. Colorimeter: equipped with 600-nm filter and 50- by 1.5-mm flow cell. Technicon, Tarrytown, New York.

5.5. Dual-pen strip-chart recorder: Technicon, Tarrytown, New York.

5.6. Spectrophotometer: Spectronic 88, Bausch and Lomb, Rochester, New York.

5.7. Pipettes: class A, volumetric, various sizes.

5.8. Pipettes: 2500-μL, Rainin electronic digital.

5.9. Flasks: class A, volumetric, various sizes.

5.10. Culture tubes: Kimble glass disposable, 16- by 100-mm, with Teflon-lined caps. VWR Scientific, Los Alamos, New Mexico.

5.11. Oven: capable of maintaining constant heat of 150°C.

6. Reagents

6.1. Sulfuric acid (concentrated, reagent-grade).

6.2. Silver sulfate (reagent-grade, crystal or powder).

6.3. Mercuric sulfate (reagent-grade, powder).

6.4. Distilled deionized water (DDW). Pass distilled water through an ion exchange column containing a mixture of both acidic cation and basic cation exchange resins.

6.5. Digestion solution. Dissolve 10.216 g of potassium dichromate ($K_2Cr_2O_7$) in 500 mL of DDW in a 1-L volumetric flask. **Cautiously** add 167 mL of concentrated H_2SO_4 and 33.3 g of $HgSO_4$. Bring volume to about 900 mL and heat and stir on magnetic stirrer to dissolve. Cool and dilute to volume with DDW.

6.6. Catalyst solution. Dissolve 22 g of Ag_2SO_4 in a 9-lb bottle of concentrated sulfuric acid (2200 mL). Stir for several hours on magnetic stirrer until dissolved.

6.7. Wash solution (50% H_2SO_4). Cautiously add 500 mL of concentrated H_2SO_4 to about 400 mL of DDW in a 1-L volumetric flask. Set in an ice water bath. Mix, cool, and dilute to volume with DDW.

6.8. Glassware wash (20% H_2SO_4). Cautiously add 200 mL of concentrated H_2SO_4 to about 700 mL of DDW. Cool and dilute to volume with DDW.

6.9. Diluent (0.2% H_2SO_4). Add 2.0 mL of concentrated H_2SO_4 to about 900 mL of DDW. Dilute to 1 L.

6.10. Brij-35 (30% solution). Technicon, Tarrytown, New York.

6.11. Reagent water. Add 1.0 mL of Brij to 500 mL of DDW.

7. Calibration and Standards

7.1. COD stock standard A (20 g/L). Dissolve 17.00 g of National Bureau of Standards (NBS) standard potassium acid phthalate (previously dried for 2 h at 105°C and stored in a desiccator jar) in approximately 500 mL of DDW. Dilute to 1 L and refrigerate. This standard is stable for 6 months.

7.2. COD stock standard B (2000 mg/L). Dilute 10 mL of stock standard A to 100 mL with diluent (0.2% H_2SO_4).

7.3. Working standards. Dilute the following volumes of stock standard B to 100 mL with diluent (0.2% H_2SO_4).

Stock Standard B (mL)	COD (mg/L)
2.5	50
5.0	100
10.0	200
15.0	300
20.0	400
25.0	500

7.4. Auto analyzer procedure.

7.4.1. Set the base line to zero using the base-line control knob on the colorimeter while pumping 50% H_2SO_4 instead of sample and with all pump tubes in their respective reagents. Set the highest-concentration standard to 100 on the chart paper using the std. cal. knob. Lower-concentration standards should read at 80, 60, 40, and 20 respectively. Record chart reading of standards in a Laboratory notebook.

7.5. Manual procedure.

7.5.1. Set the blank to zero on the spectrophotometer. Read absorbances of standards and record in a Laboratory notebook.

8. Procedure

8.1. Digestion procedure.

8.1.1. To culture tubes (which have been rinsed with 20% H_2SO_4, DDW, and air dried) add 2.5 mL of DDW for the blank, standard, or sample with a Rainin 2500-μL electronic pipette. Reset the pipette to 1500 μL and add 1.5 mL of digestion solution to each tube. **Carefully** add 3.5 mL of catalyst solution down the side of the tube so that the acid forms a layer on the bottom of the tube. To prevent loss of volatile components, do not allow the layer to mix before capping the tube. Cap the tube tightly and let cool 5-10 min. Mix on a vortex mixer to mix the layers. Sample load must include at least 10% spikes, 10% duplicates, and 10% quality control samples. To spike a sample, add 1 mL of stock standard B to 50 mL of sample. The concentration of the spike is 40 mg/L.

8.1.2. Place all tubes, samples, blanks, and standards in an oven at 150°C. Heat for 2 h. Remove from oven, cool, and let stand overnight.

8.2. Auto analyzer procedure.

8.2.1. Turn on the colorimeter, heating bath, and recorder and allow to warm up for 30 min. Use 50% H_2SO_4 in the wash receptacle.

8.2.2. Attach the COD manifold in line between the pump and colorimeter. Attach air lines to the segmenter tubes on the pump. Stretch the pump tubes across the brackets. Snap the paten into place. The pump will turn on automatically. Place reagent lines in the glassware wash solution and allow the system to wash for 20 min.

8.2.3. Place lines into the proper reagents and allow the pump to run until a steady base line is achieved. Set the base line to zero. Check the system for uniform bubble pattern, leaks, and adequate reagent supply.

8.2.4. Rinse all glassware and sample cups used in preparation of reagents, standards, and sample dilutions with glassware wash solution before use.

8.2.5. Run samples undiluted. Dilution adjustment may be necessary as evident on strip-chart output. Samples reading <10 on the chart should be rerun at higher concentrations if possible.

8.2.6. Load the carousel. Place duplicate standards in positions 1-10 (highest concentration to lowest). Place duplicate sample aliquots in the carousel in the following order: composites, quality control samples, monthlies, EPA grabs, and, rarely, drinking water. Place blanks in positions 19 and 20 to check base-line drift. Insert a pin at the last position to automatically stop the carousel. If a second carousel is required, place midrange standards in positions 1 and 2 to check reproducibility of the calibration curve. If this standard does not agree to within ± 2 chart divisions with the previous run, the complete set of standards must be rerun.

8.2.7. When determinations are completed, place the reagent tubes in distilled water and rinse the system for a minimum of 10 min. Shut off power to the colorimeter and recorder. After rinsing, remove the reagent and wash tubes from the water and pump air until all visible liquid is removed from the system. Shut down the pump by removing the paten. Release the pump tubes from the brackets.

8.2.8. Record chart readings in a Laboratory notebook. The duplicate readings are normally recorded and reported. A very high sample, however, may bias the first peak of a low sample that follows. In this case both values are recorded, but only the second peak value is reported.

8.3. Manual procedure.

8.3.1. Set the blank to zero on the spectrophotometer. Read absorbances of standards and samples (in glass tubes) and record in a Laboratory notebook.

9. Calculations

9.1 Auto analyzer procedure.

9.1.1. The factor to convert from auto analyzer chart reading to concentration can be calculated as follows:

$$F = \frac{Sc \times D}{100} \quad ,$$

where F = factor,
Sc = concentration of highest standard (mg/L), and
D = dilution.

$$C = F \times R \quad ,$$

where C = concentration of sample (mg/L),
F = factor, and
R = chart reading.

9.2 Manual procedure.

9.2.1. Plot standards vs absorbance on linear graph paper. Read the concentrations of samples from the standard curve. A linear least squares program may also be used (LSQ on the VAX).

$$C = P \times D \quad ,$$

where C = concentration of sample (mg/L),
P = plot result (mg/L), and
D = dilution of sample.

9.3. COD spike recovery should be 40 mg/L ± 8.0 (allowable) or ± 4.0 (desirable).

$$R = Cs - C \quad ,$$

where R = amount recovered (mg/L),
Cs = concentration of spiked sample (mg/L), and
C = concentration of unspiked sample (mg/L).

9.4. Percent recovery should be between 80% and 100%.

$$\%R = \frac{R \times 100}{A} ,$$

where %R = percent recovery,
R = amount recovered (mg/L), and
A = amount added (mg/L).

10. Source Materials

10.1. Technicon Industrial Method No. 452-76W (Tarrytown, New York, 1977).

10.2. American Public Health Association, American Water Works Association, and Water Pollution Control Federation, *Standard Methods for the Examination of Water and Wastewater*, 16th ed., Method 508C (American Public Health Association, Washington, DC, 1985).

10.3. Environmental Monitoring and Support Laboratory, *Methods for Chemical Analysis of Water and Waste*, Method 410.4 (Office of Research and Development, US Environmental Protection Agency, Cincinnati, Ohio, 1983).

10.4. A. M. Jirka and M. J. Carter, *Anal. Chem.* **47**, 1397 (1975).

Revisions or additions to the procedure are marked (▒▒▒▒). Where a section heading is marked, the entire section has been revised.

CHLORIDE IN WATER AND WASTE WATER — FLOW INJECTION

Analyte: Chloride	**Method No.:** WI240
Matrix: Water and waste water	**Range:** 0.1 - 100 mg/L
Procedure: Flow injection colorimetry	**Detection Limit:** 0.1 mg/L
	Accuracy and Precision: 102% ± 4% RSD
Effective Date: 09/18/86 to 01/01/92	**Author:** Mary Carol Williams

SAFETY NOTE: Before beginning this procedure, read all of the Material Safety Data Sheets for the chemicals listed in Sec. 6. Read Sec. 4.3 of the EM-9 Safety Manual for information on personal protective clothing and equipment

1. Principle of Method

1.1. Chloride reacts with mercuric thiocyanate to form a strong, covalent complex that displaces thiocyanate. The free thiocyanate reacts with aqueous iron(III) to produce the red hexacyanoferrate(III) or ferricyanide ion. This ion absorbs strongly at 480 nm. The calibration curve is nonlinear.

2. Accuracy and Precision

2.1. The determination of Cl in 12 Environmental Protection Agency WP1185 reference samples (51.7 ± 3.2 mg/L) over a period of 6 months had a mean of 52.6 mg/L and a standard deviation of ± 2.1 mg/L at the 1σ level.

2.2. Thirteen samples spiked with between 4 and 40 mg/L of Cl^- over a period of 6 months gave an average recovery of 103% with a relative standard deviation (RSD) of 11%. The recoveries ranged from 85% to 120%.

3. Interferences

3.1. Substances that complex aqueous iron(III) give negative interference, as they do not allow the thiocyanate to react with the aqueous iron(III). Sulfates are the most significant complexing agents. Fifty mg/L of Na_2SO_4 can reduce the chloride determined by 90%, and 500 ppm of phosphate can reduce the chloride determined by 16%.

3.2. Substances that reduce iron(III) to iron(II) and mercury(III) to mercury(II) (for example, sulfite and thiosulfate) cause negative interference.

3.3. Other halides that form strong complexes with mercuric ion (Br^-, I^-) cause positive interference.

3.4. If interferences are thought to be present, prepare calibration curves in water and in the suspected interfering matrix. Interferences are present if the two curves differ significantly, and in this case the standards must be prepared in the interfering matrix instead of water.

4. Collection and Storage of Samples

4.1. Samples are collected in 1-L glass or polyethylene bottles and must be analyzed within 28 days. No preservative is required.

5. Apparatus

5.1. Automatic sampler: Catalog No. 1100-100, QuikChem Systems, Lachat Instruments, Milwaukee, Wisconsin.

5.2. Sampler/valve controller: Catalog No. 1600-000, QuikChem Systems, Lachat Instruments, Milwaukee, Wisconsin.

5.3. Injection module—dual valve: Catalog No. 1000-600 equipped with sampler timer, QuikChem Systems, Lachat Instruments, Milwaukee, Wisconsin.

5.4. Multidetector chassis: Catalog No. 1300-000 with visible colorimeter, Catalogue No. 1301-000, QuikChem Systems, Lachat Instruments, Milwaukee, Wisconsin.

5.5. Proportioning pump: Catalog No. 1200-000, QuikChem Systems, Lachat Instruments, Milwaukee, Wisconsin.

5.6. Chloride manifold: Catalog No. 10-117-07-1-B, QuikChem Systems, Lachat Instruments, Milwaukee, Wisconsin.

5.7. Gilson dual-pen strip-chart recorder: Model N2, Gilson Medical Electronics, Denver, Colorado.

5.8. Pipettes: class A, various sizes.

5.9. Volumetric flasks: class A, various sizes.

5.10. Vacuum filter holder: 47-mm, Millipore, Bedford, Massachusetts.

5.11. Bottles: 1-L, glass or polyethylene.

5.12. Filter: 0.45-μm (47-mm), Millipore, Bedford, Massachusetts.

6. Reagents

6.1. Distilled deionized water (DDW). Pass distilled water through an ion exchange column containing a mixture of both acidic cation and basic cation exchange resins.

6.2. Nitric acid (concentrated, reagent-grade).

6.3. Mercuric thiocyanate stock. Dissolve 4.17 g of mercuric thiocyanate [$Hg(SCN)_2$] in about 500 mL of methanol in a 1-L volumetric flask. Dilute to volume with methanol and invert three times.

CAUTION: Mercury is a very toxic metal. Wear gloves!

6.4. Ferric nitrate reagent stock (0.5 M). Dissolve 202 g of ferric nitrate [$Fe(NO_3)_3 \cdot 9H_2O$] in approximately 800 mL of distilled water in a 1-L volumetric flask. Add 25 mL of concentrated nitric acid and dilute to volume. Invert three times.

6.5. Combined color reagent. Mix 75 mL of stock mercuric thiocyanate solution with 75 mL of stock ferric nitrate reagent in a 500-mL volumetric flask and dilute to volume. Invert three times. Vacuum-filter through a 0.45-μm membrane filter. This reagent may be purchased from Fisher Scientific in 4-L bottles (Fisher Diagnostics Chloride Color Reagent, No. CS 298-4).

6.6. Sodium chloride (primary-grade).

7. Calibration and Standards

7.1. Chloride stock standard A (1000 mg/L). Add 1.648 g of primary-grade sodium chloride dried at 105°C for 1 h to 900 mL of distilled water in a 1-L volumetric flask. Dilute to volume.

7.2. Working standards. Pipette the following volumes of stock standard A into 100-mL volumetric flasks. Dilute to volume with distilled water. Prepare fresh daily.

Stock Standard A (mL)	Cl (mg/L)
1.0	10
2.0	20
4.0	40
6.0	60
8.0	80
10.0	100

7.3. Set the base line to zero using the zero knob on the colorimeter while pumping DDW and with all pump tubes in their respective reagents. Set the highest-concentration standard to 100 on the chart paper using the gain knob. Lower-concentration standards should read approximately 80, 60, 40, 20, and 10 respectively. The calibration curve is not linear. Record chart reading of standards in a Laboratory notebook.

8. Procedure

8.1. Turn on the detector, injection module, timer, and valve controller and allow to warm up for 30 min. Place the sampler wash line in DDW and the waste lines in the proper waste container.

8.2. Place the chloride manifold in the valve controller chassis and attach the sample loop between the No. 1 and No. 4 ports. Attach the sampler wash line at the No. 6 port and the carrier line at the No. 2 port. The lines from the No. 3 and No. 5 ports go to the manifold and pump respectively. When operating in dual-channel mode, the No. 5 port of channel 1 connects to the No. 6 port of channel 2.

8.3. Set up the manifold, injection loop, and reagent and waste lines. Set the interference filter to 480 nm and the flow cell to 10 mm and 80 μL. Set the injection timing as follows:

- Pump speed 35
- Cycle period 60 s
- Load period 30 s
- Inject period 30 s
- Sample loop 20 cm

8.4. Stretch the pump tubes across pump cassettes and snap cassettes into place. Lift the tension adjustment levers straight up. Check for system leaks or bubbles.

8.5. Place wash, carrier, and reagent lines in proper receptacles and pump until a stable base line is established. Set colorimeter and recorder to zero base line. The recorder is normally run at 100X and 20 mV with a chart speed of 0.1 mm/s. Set the gain on the colorimeter to 300.

8.6. Load the carousel. Place duplicate aliquots of the six standards in positions 1-10 (highest concentration to lowest). Place duplicate aliquots of the blank, quality control samples, and samples to be analyzed beginning with position 13. The sample load must include at least 10% duplicates, 10% spikes, and 10% quality control samples. To spike a sample, add 1.0 mL of stock standard A to

25 mL of sample. Place blanks in positions 19 and 20 to check base-line drift. If a second carousel is required, place midrange standards in positions 1 and 2. If this standard does not agree to within ± 2 chart divisions with the previous run, the complete set of standards must be rerun.

8.7. When determinations are completed, place the reagent tubes in DDW and rinse the system for a minimum of 10 min. After rinsing, remove the wash, carrier, and reagent lines from the water and pump air until all visible liquid is removed from the system. Remove the pump cassettes and shut off power to all units.

8.8. Readings from the chart are recorded in a Laboratory notebook. Ordinarily, both duplicate readings are recorded and reported. However, a very high sample may bias the first peak of a low sample that follows. In this case both values are recorded, but only the second peak value is reported.

9. Calculations

9.1. Individual values for standards and samples are entered into the LSQ program in the VAX under the EM-9 LIMS MISCELLANEOUS MENU to obtain the actual values for the samples. A typical terminal session is shown below.

```
EM- 9 LIMS MISCELLANEOUS MENU

A.   MEAN
B.   STDDEV (standard deviation)
C.   ALLDATA - SEARCH (ARCHIVE-SEARCH)
D.   QA-HELP
G.   LINREG - Linear Regression
H.   POLY - Polynominal fitting
I.   LSQ - Least Squares fitting
Y.   RETURN TO MAIN LIMS MENU
Z.   EXIT FROM LIMS. RETURN TO YOUR USER PROMPT.

Enter the LETTER of your choice and <CR>
I

ENTER # OF PTS. MAXDEG (UP TO 2)
12, 2

PLOT TYPE: LIN=1, LOGX=2, LOGY=3, LOGXY=4
1

FORCE CURVE THROUGH ZERO? YES=1, NO=0
1
```

```
ENTER RESULT-&-STANDARD PAIRS, ONE AT A TIME
100,    99.5
100,    98.5
 80,    91.5
 80,    91.0
 60,    80.0
 60,    82.0
 40,    66.0
 40,    66.2
 20,    41.0
 20,    40.5
 10,    23.5
 10,    23.5

CONSTANT      =  -0.78261E-11
1 ST POWER    =   0.55435E-02
2 ND POWER    =   0.48913E-04

EVALUATE SINGLE VALUES?  YES=1, NO=0
1

ENTER # PTS TO EVALUATE, THEN SAMPLE RESULT ONE AT A TIME
2
25.0
24.0
```

MEASURED	ACTUAL VALUE
25.00000	8.09000
24.00000	7.50000

9.2. Chloride spike recovery should be 40 mg/L ± 8 (allowable) or ± 4 (desirable).

$$R = Cs - C \quad ,$$

where R = amount recovered (mg/L),
Cs = concentration of spiked sample (mg/L), and
C = concentration of unspiked sample (mg/L).

9.3. Percent recovery should be between 85% and 115%.

$$\%R = \frac{R \times 100}{A} ,$$

where %R = percent recovery,
R = amount recovered (mg/L), and
A = amount added (mg/L).

10. Source Materials

10.1. QuikChem Method No. 10-117-07-1-B (Lachat Instruments, Milwaukee, Wisconsin, 1986).

10.2. American Public Health Association, American Waterworks Association, and Water Pollution Control Federation, *Standard Methods for the Examination of Water and Wastewater*, 16th ed., Method 407D (American Public Health Association, Washington, DC, 1985).

10.3. Environmental Monitoring and Support Laboratory, *Methods for Chemical Analysis of Water and Waste*, Method 325.1 (Office of Research and Development, US Environmental Protection Agency, Cincinnati, Ohio, 1983).

10.4. D. M. Zall, D. Fisher, and M. Q. Garner, *Anal. Chem.* **28**, 1665-8 (1959).

10.5. *Manual of Laboratory Methods* (Illinois Environmental Protection Agency, Urbana, Illinois, 1983).

10.6. *Methods for Determinations of Inorganic Substances in Water and Fluvial Sediments*, Book 5, Chapter A1, Method I-2187-78 (US Department of the Interior, US Geological Survey, Reston, Virginia, 1983).

CHROMIUM VI IN WATER AND WASTE WATER — SPECTROPHOTOMETRIC

Analyte: Chromium VI	**Method No.:** WI250
Matrix: Water and waste water	**Range:** 0.04 - 0.6 mg/L
Procedure: Colorimetry	**Detection Limit:** 0.04 mg/L
	Accuracy and Precision: 102% ± 11% RSD
Effective Date: 01/02/84 to 01/01/90	**Author:** Mary Carol Williams

SAFETY NOTE: Before beginning this procedure, read all of the Material Safety Data Sheets for the chemicals listed in Section 6. Read Section 4.3 of the HSE-9 Safety Manual for information on personal protective clothing and equipment.

1. Principle of Method

1.1. Chromium VI is measured colorimetrically after reacting with diphenylcarbazide to form a soluble red-violet product that absorbs at 540 nm.

2. Accuracy and Precision

2.1. The determination of chromium in 42 EPA WP284/2 reference samples (0.258 ± 0.048 mg/L) over a period of 12 months had a mean of 0.263 mg/L and a relative standard deviation of 8.0%.

2.2. The relative standard deviation of 18 composite determinations for chromium over a period of 12 months was 11% at a concentration level of 0.20 mg/L.

2.3. Thirty-eight samples spiked with chromium at 0.2 mg/L over a period of 12 months resulted in an average recovery of 92% and a relative standard deviation of 14%. The percent recovery ranged from 64% to 123%.

3. Interferences

3.1. Molybdenum VI and mercury salts also react with color reagent. Up to 200 mg/L of molybdenum or mercury can be tolerated.

3.2. Vanadium also interferes but concentrations up to 10 times that of chromium will not cause trouble.

3.3. Solutions containing reducing agents interfere with spike recovery.

4. Collection and Storage of Samples

4.1. Collect samples for chromium VI in polyethylene bottles, cool to 4°C and analyze within 24 h.

5. Apparatus

5.1. Spectrophotometer: Spectronic 88, Bausch & Lomb, Rochester, New York.

5.2. Flasks: 25-mL, volumetric.

5.3. Pipettes: volumetric, various sizes.

6. Reagents

6.1. Sulfuric acid (concentrated, reagent-grade).

6.2. Sulfuric acid (1.2 M). Slowly add 6.5 mL of concentrated H_2SO_4 to distilled deionized water and dilute to 100 mL.

6.3. Diphenylcarbazide solution (0.25 M). Dissolve 0.2 g diphenylcarbazide and 1.0 g phthalic anhydride in 200 mL ethanol (sp. gr. 1.84). Keep refrigerated.

6.4. Chromium VI stock standard A (100 mg/L). Dissolve 0.2829 g of primary standard $K_2Cr_2O_7$ (dried for 1 h at 180°C) in distilled water and dilute to 1000 mL.

7. Calibration and Standards

7.1. Chromium VI stock standard B (5 mg/L). Dilute 5.0 mL stock chromium A to 100 mL with distilled water. Prepare monthly.

7.2. Prepare a blank by adding 10 mL of distilled water to a 25-mL volumetric flask.

7.3. Chromium VI working standards. Prepare daily. Pipette stock standard B into 25-mL volumetric flasks and dilute to approximately 20 mL. Run standards through Section 8 in same manner as the samples.

Standard B (mL)	Cr VI μg/25 mL flask	Cr VI (mg/L)
0.5	2.5	0.1
1.0	5.0	0.2
2.0	10.0	0.4
3.0	15.0	0.6

8. Procedure

8.1. Add 20 mL of filtered, non-acid sample or 20 mL of diluted sample to a 25-mL volumetric flask. To spike a sample, add 1.0 mL of standard B to the sample in a 25-mL volumetric flask. Include 10% spikes, 10% quality control samples, and 10% duplicates.

8.2. Add 1 mL 1.2 M H_2SO_4 and mix. Add 1 mL of diphenylcarbazide reagent, dilute to volume, and mix.

8.3. Allow to stand 10 min. Using the Spectronic 88 set at 540 nm with a 20-mm cuvette, set the blank at zero absorbance. Read absorbance of the standards and samples and record in a Laboratory notebook.

9. Calculations

9.1. Plot a calibration curve with absorbance on the y-axis and concentration of chromium on the x-axis. A least squares fit may also be used.

9.2. Determine the concentration of chromium in the samples from the standard curve.

9.2.1. Concentration of chromium VI (mg/L) = chart reading (μg Cr VI per 25 mL)/ mL of sample used.

9.3. Spike recovery of Cr VI should be 0.2 mg/L ± 0.04 (allowable) ± 0.02 (desirable).

$$R = Cs - C \quad ,$$

where R = amount recovered (mg/L),
Cs = concentration of spiked sample (mg/L), and
C = concentration of sample (mg/L).

9.4. Percent recovery should be between 85% and 115%.

$$\%R = \frac{R \times 100}{A} \quad ,$$

where %R = percent recovery,
R = amount recovered (mg/L), and
A = amount added (mg/L).

10. Source Material

10.1. *Methods for Analysis of Inorganic Substance in Water and Fluvial Sediments*, Method I-1230-78, Open-File Report 78-679, USGS Water Quality Laboratories (U.S. Department of the Interior, U.S. Geological Survey, Reston, Virginia, 1978).

CHROMIUM VI IN WATER AND WASTE WATER — FLOW INJECTION

Analyte: Hexavalent chromium	**Method No.:** WI260
Matrix: Water and waste water	**Range:** 0.02 - 0.4 mg/L
Procedure: Flow injection colorimetry	**Detection Limit:** 0.02 mg/L
	Accuracy and Precision: 102% ± 7% RSD
Effective Date: 09/16/86	**Author:** Mary Carol Williams

SAFETY NOTE: Before beginning this procedure, read all of the Material Safety Data Sheets for the chemicals listed in Sec. 6. Read Sec. 4.3 of the EM-9 Safety Manual for information on personal protective clothing and equipment.

1. Principle of Method

1.1. Chromium VI (Cr^{+6}), in a solution of pH 0.7 to 1.3, is measured directly after reacting with diphenylcarbazide to form a red-violet water-soluble compound that absorbs light at 540 nm.

2. Accuracy and Precision

2.1. The determination of Cr^{+6} in 35 in-house reference samples (0.4 ± 0.04 mg/L) over a period of 6 months had a mean of 0.41 mg/L and a relative standard deviation (RSD) of 7%.

2.2. Twenty samples spiked with chromium at 0.2 mg/L over a period of 6 months had an average recovery of 97% with a standard deviation of ± 0.028 mg/L at the 1σ level. The recoveries ranged from 84% to 108%.

3. Interferences

3.1. Mercury and Mo^{+6} salts also react with color reagent. Up to 200 mg/L of molybdenum or mercury can be tolerated.

3.2. Vanadium also interferes, but concentrations up to 10 times that of chromium will not cause interference.

3.3. Solutions containing reducing agents interfere with spike recovery.

4. Collection and Storage of Samples

4.1. Collect samples for Cr^{+6} in polyethylene bottles, cool to 4°C, and analyze within 24 h.

5. Apparatus

5.1. Automatic sampler: Catalog No. 1100-100, QuikChem Systems, Lachat Instruments, Milwaukee, Wisconsin.

5.2. Sampler/valve controller: Catalog No. 1600-000, QuikChem Systems, Lachat Instruments, Milwaukee, Wisconsin.

5.3. Injection module—dual valve: Catalog No. 1000-600, equipped with sampler timer, QuikChem Systems, Lachat Instruments, Milwaukee, Wisconsin.

5.4. Multidetector chassis: Catalog No. 1300-000, with visible colorimeter, Catalog No. 1301-000, QuikChem Systems, Lachat Instruments, Milwaukee, Wisconsin.

5.5. Proportioning pump: Catalog No. 1200-000, QuikChem Systems, Lachat Instruments, Milwaukee, Wisconsin.

5.6. Chromium VI manifold: Catalog No. 10-124-16-1-A, QuikChem Systems, Lachat Instruments, Milwaukee, Wisconsin.

5.7. Heating bath with circulator: Catalog No. 1000-500, QuikChem Systems, Lachat Instruments, Milwaukee, Wisconsin.

5.8. Gilson dual-pen strip-chart recorder: Model N2, Gilson Medical Electronics, Denver, Colorado.

5.9. Pipettes: class A, volumetric, various sizes.

5.10. Pipettes: 1-mL, Eppendorf.

5.11. Flasks: class A, volumetric, various sizes.

6. Reagents

6.1. Distilled deionized water (DDW). Pass distilled water through an ion exchange column containing a mixture of both acidic cation and basic cation exchange resins.

6.2. Color reagent. In a 500-mL volumetric flask, dissolve 0.20 g of s-diphenylcarbazide in 100 mL of isopropanol (isopropyl alcohol, 99%). Add 350 mL of distilled water and 40 mL of concentrated sulfuric acid. Dilute to volume with distilled water. This solution is stable for 1 month. Keep

refrigerated. Warm an aliquot of reagent to room temperature to avoid baseline drift.

7. Calibration and Standards

7.1. Chromium VI stock standard A (100 mg/L). Dissolve 0.2829 g of primary standard $K_2Cr_2O_7$ (dried for 1 h at 180°C) in distilled water and dilute to 1000 mL. Prepare fresh every 6 months.

7.2. Chromium VI stock standard B (5 mg/L). Dilute 10.0 mL of chromium stock standard A to 200 mL with distilled water. Prepare monthly.

7.3. Chromium VI working standards. Prepare monthly. Pipette the following volumes of stock standard B into volumetric flasks as shown below and dilute to volume. Run standards through Sec. 8 in the same manner as the samples.

Stock Standard B (mL)	Total Vol (mL)	Cr^{+6} (mg/L)
20.0	200	0.5
8.0	100	0.4
4.0	100	0.2
2.0	100	0.1
2.0	250	0.04
1.0	250	0.02

7.4. Set the base line to zero using the zero knob on the colorimeter while pumping DDW and with all pump tubes in their respective reagents. Set the highest-concentration standard at 100 on the chart paper using the gain knob. Lower-concentration standards should read at 80, 60, 40, and 20 respectively. Record chart readings of standards in a Laboratory notebook.

8. Procedures

8.1. Turn on the detector, heating bath, injection module, timer, and valve controller and allow to warm up for 30 min. Place the sampler wash line in distilled water and the waste lines in the proper waste container.

8.2. Place the Cr^{+6} manifold in the valve controller chassis and attach the sample loop between the No. 1 and No. 4 ports. Attach the sampler wash line at the No. 6 port and the carrier line at the No. 2 port. The lines from the No. 3 and No. 5 ports go to the manifold and pump respectively. When operating in dual channel mode, the No. 5 port of channel 1 connects to the No. 6 port of channel 2.

8.3. Set up the manifold, injection loop, and reagent and waste lines. Set the interference filter at 540 nm and the flow cell to 10 mm and 80 μL. Set the injection timing as follows:

- Pump speed 35
- Cycle period 40 s
- Load period 20 s
- Inject period 20 s
- Sample loop 120 cm

8.4. Stretch the pump tubes across pump cassettes and snap cassettes into place. Lift the tension adjustment levers straight up. Check for system leaks or bubbles.

8.5. Place wash, carrier, and reagent lines in proper receptacles and pump until a stable base line is established. Set colorimeter and recorder to zero base line. The recorder is normally run at 100X and 20 mV with a chart speed of 0.1 mm/s. Set the gain on the colorimeter so that the 0.5-mg/L standard reads 100.

8.6. Load the carousel. Place duplicate aliquots of the five standards in positions 1-10 (highest concentration to lowest). Place duplicate aliquots of the blank, quality control samples, and samples to be analyzed beginning with position 11. The sample load must include at least 10% spikes and 10% quality control samples. To spike a sample, add 2.0 mL of stock standard B to 50 mL of sample. Dilute appropriately. Place blanks at positions 19 and 20 to check base line drift. If a second carousel is required, place midrange standards in positions 1 and 2. If this standard does not agree to within ± 2 chart divisions with the previous run, the complete set of standards must be rerun.

8.7. When determinations are completed, place the reagent tubes in distilled water and rinse the system for a minimum of 10 min. After rinsing, remove the wash, carrier, and reagent lines from the water and pump air until all visible liquid is removed from the system. Remove the pump cassettes and shut off power to all units.

8.8. Record chart readings in a Laboratory notebook. The duplicate readings are normally recorded and reported. A very high sample, however, may bias the first peak of a low sample that follows. In this case both values are recorded, but only the second peak value is reported.

9. Calculations

9.1. The factor to convert from chart reading to concentration can be calculated as follows:

$$F = \frac{Sc}{100} \quad ,$$

where F = factor and
Sc = concentration of highest standard (mg/L).

$$C = F \times R \times D \quad ,$$

where C = concentration of sample (mg/L),
F = factor,
R = chart reading, and
D = dilution.

9.2. Spike recovery for Cr^{+6} should be 0.2 mg/L ± 0.04 (allowable) or ± 0.2 (desirable).

$$R = Cs - C \quad ,$$

where R = amount recovered (mg/L),
Cs = concentration of spiked sample (mg/L), and
C = concentration of unspiked sample (mg/L).

9.3. Percent recovery should be between 85% and 115%.

$$\%R = \frac{R \times 100}{A} \quad ,$$

where %R = percent recovery,
R = amount recovered (mg/L), and
A = amount added (mg/L).

10. Source Materials

10.1. QuikChem Method No. 10-124-16-1-A (Lachat Instruments, Milwaukee, Wisconsin, 1986).

10.2. *Methods for Analysis of Inorganic Substances in Water and Fluvial Sediments*, Method I-1230-78, Open-File Report 78-679, USGS Water Quality Laboratories (US Department of the Interior, US Geological Survey, Reston, Virginia, 1983).

Revisions or additions to the procedure are marked (▒▒▒▒). Where a section heading is marked, the entire section has been revised.

CYANIDE IN WASTE WATER — AUTO ANALYZER

Analyte: Cyanide	**Method No.:** WI270
Matrix: Waste water	**Range:** 5-500 μg/L
Procedure: Automated colorimetry	**Detection Limit:** 10 μg/L
	Accuracy and Precision: 92% ± 6% RSD
Effective Date: 01/01/85 to 01/01/92	**Author:** Mary Carol Williams

SAFETY NOTE: Before beginning this procedure, read all of the Material Safety Data Sheets for chemicals listed in Sec. 6. Read Sec. 4.3 of the EM-9 Safety Manual for information on personal protective clothing and equipment and SOP1, "Analysis of Cyanide and Sulfide Waste Samples."

1. Principle of Method

1.1. Metal cyanide complexes are dissociated by ultraviolet irradiation and are separated as HCN from the matrix by acid distillation.

1.2. The HCN is converted to cyanogen chloride (CNCl) by reaction with Chloramine-T. The CNCl reacts with pyridine/barbituric acid to produce a purple complex that can be measured at 570 nm.

2. Accuracy and Precision

2.1. The determination of CN in 30 Environmental Protection Agency (EPA) reference samples (0.538 ± 0.078 mg/L) over a period of 12 months gave a mean of 0.497 mg/L and a standard deviation of ±0.032 mg/L at the 1σ level.

2.2. Forty-seven CN samples spiked at 4 mg/L over a period of 12 months had an average recovery of 99% with a relative standard deviation (RSD) of 7.0%. The recoveries ranged from 88 to 115%.

3. Interferences

3.1. Thiocyanates decompose to cyanide, causing a positive interference.

3.2. Sulfides interfere with color development.

4. Collection and Storage of Samples

4.1. Adjust nonacid samples to pH >12 with 10 N NaOH immediately after collection and analyze as soon as possible. Store samples at 4°C pending analysis. Complete analysis within 14 days.

4.2. Check for oxidizing agents using KI-starch paper (blue is positive). Add ascorbic acid a few crystals at a time until a drop of sample on KI-starch paper produces no color change. Add an additional 0.6 g of ascorbic acid per liter.

4.3. Immediately before CN^- determination, check for sulfide using lead acetate paper (a dark spot, PbS, is positive). Precipitate sulfide with a minimal amount of $Cd(CO_3)_2$ salt until CdS, a yellow precipitate, forms. Recheck until lead acetate paper shows no change. Filter the sample.

5. Apparatus

5.1. Sampler IV: equipped with a 40-slot sample carousel and a 30/h, 4:1 sampling cam. Bran Lubbe, Elmsford, New York.

5.2. Proportioning pump: Bran Lubbe, Elmsford, New York.

5.3. Cyanide manifold: equipped with pump tubes, mixing coils, and 185-nm ultraviolet lamp. Bran Lubbe, Elmsford, New York.

5.4. Colorimeter: equipped with 570-nm filter and 15- by 1.5-mm flow cell. Bran Lubbe, Elmsford, New York.

5.5. VWR 1140 refrigerated circulating bath: VWR Scientific, Los Alamos, New Mexico.

5.6. Distillation bath: filled with mineral oil and set at 155°C. Bran Lubbe, Elmsford, New York.

5.7. Dual-pen strip-chart recorder: Bran Lubbe, Elmsford, New York.

5.8. Pipettes: class A, volumetric, various sizes.

5.9. Flasks: class A, volumetric, various sizes.

6. Reagents

6.1. Phosphoric acid (reagent-grade, 85%).

6.2. Hypophosphoric acid (reagent-grade, 50%).

6.3. Distillation reagent. Carefully add 250 mL of 85% phosphoric acid and 50 mL of 50% hypophosphoric acid to 700 mL of distilled water in a 1-L volumetric flask. Dilute to volume with distilled water.

6.4. Brij-35 (30% solution). Bran Lubbe, Elmsford, New York.

6.5. Potassium dihydrogen phosphate (reagent-grade).

6.6. Disodium hydrogen phosphate (reagent-grade).

6.7. Buffer (pH 5.2). Dissolve 13.6 g of potassium dihydrogen phosphate and 0.28 g of disodium hydrogen phosphate in 900 mL of distilled water and dilute to 1 L. Add 0.5 mL of Brij-35 per liter and refrigerate.

6.8. Sodium hydroxide (0.1%). Dissolve 4.0 g of NaOH in 1 L of distilled water.

6.9. Chloramine-T. Add 2.0 g of Chloramine-T to 250 mL of distilled water. Stir until well mixed and filter. Make fresh weekly and refrigerate.

6.10. Pyridine-barbituric acid.

CAUTION: Prepare in a hood. Pyridine is toxic.

Wet 10.0 g of barbituric acid with 50 mL of distilled water. Add 50 mL of pyridine and 10 mL of concentrated hydrochloric acid. Dilute to 500 mL with distilled water. Prepare monthly and refrigerate.

6.11. Sodium hydroxide (10 N). Slowly add 400 g of NaOH to approximately 700 mL of distilled water in a 1000-mL volumetric flask. Stir with a magnetic stirrer until dissolved. Dilute to volume.

6.12. Hydrogen fluoride (concentrated, reagent-grade).

6.13. Hydrogen fluoride (2%). Dilute 2 mL of concentrated hydrogen fluoride to 100 mL in a polyethylene volumetric flask.

6.14. Nitrogen (N_2). Compressed N_2 gas in 15-lb bottle. Los Alamos National Laboratory Gas Facility.

7. Calibration and Standards

7.1. CN stock standard A (100 mg/L).

CAUTION: Cyanide is toxic.

Dissolve 0.250 g of KCN in 0.1% NaOH and dilute to 1 L with 0.1% NaOH. Prepare fresh monthly and keep refrigerated.

7.2. CN stock standard B (5 mg/L). Dilute 5.0 mL of stock standard A to 100 mL with 0.1% NaOH.

7.3. Working standards. Dilute the following volumes of stock standard B to 100 mL with 0.1% NaOH. Prepare fresh daily.

Stock Standard B (mL)	CN (mg/L)
1.0	0.05
2.0	0.1
4.0	0.2
6.0	0.3
8.0	0.4
10.0	0.5

7.4. Set the base line to zero using the base-line control knob on the colorimeter while pumping distilled water and with all pump tubes in their respective reagents. Set the highest-concentration standard at 100 on the chart paper using the std. cal. knob. Lower-concentration standards should read at 80, 60, 40, and 20 respectively. Record chart reading of standards in a Laboratory notebook.

8. Procedure

8.1. Turn on the colorimeter, distillation bath, cooling bath, and recorder and allow to warm up for 30 min. Distillation bath is preset to 155°C.

8.2. Attach the cyanide manifold in line between the pump and colorimeter. Attach air lines to the segmenter tubes on the pump. Stretch the pump tubes across the brackets. Snap the paten into place. The pump will turn on automatically. Place sample and distillation reagent lines in 2% HF solution and pump about 10 min to clean the distillation coil. Place heating bath lines in the waste receptacle so that HF does not enter the manifold. Place reagent lines in distilled water and allow the system to wash for 20 min.

8.3. Attach heating bath lines to the pump tubes. Place lines into the proper reagents and allow the pump to run until a steady base line is achieved. Set the base line to zero. Check the system for uniform bubble pattern, leaks, and adequate reagent supply.

8.4. To measure total cyanide, turn on the ultraviolet source in the colorimeter and allow a 2-min warm-up before running samples. Turn on the nitrogen immediately before sampling. Free cyanide determinations are completed in the same manner as total cyanide except that the ultraviolet source and nitrogen are not used.

8.5. Load the carousel. Place duplicate aliquots of the six standards in positions 1-12 (highest concentration to lowest). Place duplicate sample aliquots in the carousel in the following order: quality control samples, monthlies, EPA grabs, plating bath, and, rarely, drinking water. The EPA grabs, drinking, and environmental waters are run undiluted. The sample load must include at least 10% spikes, 10% duplicates, and 10% quality control samples. To spike a sample, add 1.00 mL of CN stock standard B to 25 mL of sample. Dilute appropriately. The concentration of the spike is 0.2 mg/L. Place blanks at positions 19 and 20 to check base-line drift. Insert a pin at the last position to automatically stop the carousel. If a second carousel is required, place midrange standards in positions 1 and 2 to check reproducibility of the calibration curve. If this standard does not agree to within ± 2 chart divisions with the previous run, the complete set of standards must be rerun.

8.6. When determinations are completed, place the reagent tubes in distilled water and rinse the system for a minimum of 10 min. Shut off power to the heating bath, colorimeter, cooling bath, and recorder. Turn off the N_2 tank. After rinsing, remove the reagent and wash tubes from the solutions and pump air until all visible liquid is removed from the system. Shut down the pump by removing the paten. Release the pump tubes from the brackets.

8.7. Standards or samples containing CN >100 mg/L must be mixed with calcium hypochlorite powder in the hood before discarding. Add one scoop of calcium hypochlorite powder to approximately 100 mL of solution. Stir for one hour. Discard the resulting solution in the hood drain.

8.8. Record chart readings in a Laboratory notebook. The duplicate readings are normally recorded and reported. A very high sample, however, may bias the first peak of a low sample that follows. In this case both values are recorded but only the second peak value is reported.

9. Calculations

9.1. Individual values for standards and samples are entered into the LSQ program in the VAX under the EM-9 LIMS MISCELLANEOUS MENU to obtain the actual values for the samples. A typical terminal session is shown below.

EM-9 LIMS MISCELLANEOUS MENU

A. MEAN
B. STDDEV (standard deviation)
C. ALLDATA-SEARCH (ARCHIVE-SEARCH)
D. QA-HELP
G. LINREG - Linear Regression
H. POLY - Polynominal fitting

```
I.      LSQ - Least Squares fitting
Y.      RETURN TO MAIN LIMS MENU
Z.      EXIT FROM LIMS.  RETURN TO YOUR USER PROMPT.

Enter the LETTER of your choice and <CR>
I

ENTER # OF PTS, MAXDEG (UP TO 2)
12, 2

PLOT TYPE:  LIN=1, LOGX=2, LOGY=3, LOGXY=4
1

FORCE CURVE THROUGH ZERO?  YES=1, NO=0
1

ENTER RESULT-&-STANDARD PAIRS, ONE AT A TIME
 100,   0.5
 100,   0.5
81.0,   0.4
82.3,   0.4
  61,   0.3
  62,   0.3
42.0,   0.2
42.5,   0.2
23.0,   0.1
23.0,   0.1
13.5,   0.05
13.0,   0.05

CONSTANT     =  -0.78261E-11
1 ST POWER   =   0.55435E-02
2 ND POWER   =   0.48913E-04

EVALUATE SINGLE VALUES?  YES=1, NO=0
1

ENTER # PTS TO EVALUATE, THEN SAMPLE RESULT ONE AT A TIME
2
12.0
56.0

          MEASURED        ACTUAL VALUE
          12.00000          0.05400
          56.00000          0.26600
```

9.2. CN spike recovery should be 0.2 mg/L ± .04 (allowable) or ± .02 (desirable).

$$R = Cs - C \quad ,$$

where R = amount recovered (mg/L),
Cs = concentration of spiked sample (mg/L), and
C = concentration of unspiked sample (mg/L).

9.3. Percent recovery should be between 85% and 115%.

$$\%R = \frac{R \times 100}{A} \quad ,$$

where %R = percent recovery,
R = amount recovered (mg/L), and
A = amount added (mg/L).

10. Source Materials

10.1. Technicon Industrial Method No. 315-74W with modifications (Tarrytown, New York, 1974).

10.2. American Public Health Association, American Waterworks Association, and Water Pollution Control Federation, *Standard Methods for the Examination of Water and Wastewater*, 16th ed., Methods 412A and 412B (American Public Health Association, Washington, DC, 1985).

10.3. Environmental Monitoring and Support Laboratory, *Methods for Chemical Analysis of Water and Waste*, Method 335.3 (Office of Research and Development, US Environmental Protection Agency, Cincinnati, Ohio, 1983).

NITRATE IN WATER AND WASTE WATER — FLOW INJECTION

Analyte: Nitrate	**Method No.:** WI280
Matrix: Water and waste water	**Range:** 0.02 - 2.00 mg N/L
Procedure: Flow injection colorimetry	**Detection Limit:** 0.04 mg N/L
	Accuracy and Precision: 104% ± 3% RSD
Effective Date: 09/18/86 to 01/01/92	**Author:** Mary Carol Williams

SAFETY NOTE: Before beginning this procedure, read all of the Material Safety Data Sheets for the chemicals listed in Sec. 6. Read Sec. 4.3 of the EM-9 Safety Manual for information on personal clothing and equipment.

1. Principle of Method

1.1. Diluted sample is pumped through the copper-cadmium reducing column to reduce NO_3^- to NO_2^-.

1.2. The nitrite (reduced nitrate plus original nitrite) is then determined by diazotizing with sulfanilamide followed by coupling with N-(1-naphthyl)ethylenediamine dihydrochloride. The resulting water-soluble dye has a magenta color that is discriminated by the 520-nm interference filter.

2. Accuracy and Precision

2.1. The determination of NO_3-N in 12 Environmental Protection Agency WP481/2 reference samples (1.60 ± 0.08 mg/L) over a period of 6 months gave a mean of 1.67 mg/L and a standard deviation of ±0.048 mg/L at the 1σ level.

2.2. Fifteen samples spiked with between 0.8 and 40.0 mg/L of NO_3-N over a period of 6 months gave an average recovery of 96% with a relative standard deviation of 8%. The recoveries ranged from 81 to 112%.

3. Interferences

3.1. Metal ions (Cu^{2+}, Hg^{2+}) produce a positive error because of absorption bands in the region of color measurement. Add ethylenediaminetetraacetic acid (EDTA) to the samples to eliminate this interference.

3.2. High concentrations of reducing substances (SO_3^{2-}, S^{2-}) will adversely affect operation.

3.3. Samples that contain large concentrations of oil and grease will coat the surface of the cadmium. Eliminate this interference by pre-extracting the sample with an organic solvent.

3.4. Buildup of suspended matter in the reduction column restricts sample flow. Because nitrate is soluble, the sample may be prefiltered.

4. Collection and Storage of Samples

4.1. Collect samples in polyethylene bottles. Nonacid samples may be used if analysis is completed within 24 h. These samples should be preserved by refrigeration at 4°C.

4.2. If long-term storage is necessary, acidify samples to pH <2 with concentrated H_2SO_4 (2.0 mL concentrated H_2SO_4/L) and store at 4°C. Analysis of acid-preserved samples must be completed within 28 days. Nitrate may be lost because of reduction to nitrite or bacterial action in nonacid samples.

5. Apparatus

5.1. Automatic sampler: catalog no. 1100-100, QuikChem Systems, Lachat Instruments, Milwaukee, Wisconsin.

5.2. Sampler valve controller: catalog no. 1600-000, QuikChem Systems, Lachat Instruments, Milwaukee, Wisconsin.

5.3. Injection module—dual valve: catalog no. 1000-600, equipped with sampler timer, QuikChem Systems, Lachat Instruments, Milwaukee, Wisconsin.

5.4. Multidetector chassis: catalog no. 1300-000, with visible colorimeter, Catalog No. 1301-000, QuikChem Systems, Lachat Instruments, Milwaukee, Wisconsin.

5.5. Proportioning pump: catalog no. 1200-000, QuikChem Systems, Lachat Instruments, Milwaukee, Wisconsin.

5.6. Nitrate/nitrite manifold: catalog no. 10-107-04-1-C, QuikChem Systems, Lachat Instruments, Milwaukee, Wisconsin.

5.7. Cadmium column: QuikChem Systems, Lachat Instruments, Milwaukee, Wisconsin.

5.8. Gilson dual-pen strip-chart recorder: model N2, Gilson Medical Electronics, Denver, Colorado.

5.9. Pipettes: class A, volumetric, various sizes.

6.2. Color reagent. To approximately 350 mL of distilled water add 50 mL concentrated phosphoric acid and 20 g of sulfanilamide. Dissolve completely. Add 0.5 g of N-(1-naphthyl)ethylenediamine dihydrochloride. Dilute to 500 mL with distilled water. Store in an amber bottle and refrigerate. Prepare fresh monthly.

6.3. Hydrochloric acid (6N). Dilute 50 mL of concentrated HCl to 100 mL with distilled water.

6.4. Copper sulfate solution (2%). Dissolve 20 g of $CuSO_4 \cdot 5H_2O$ in 500 mL of distilled water and dilute to 1 L.

6.5. Cadmium powder.

CAUTION: Wear gloves. Collect and store all waste cadmium. It is very toxic and also carcinogenic.

Grind and size cadmium metal to pass through a 25-mesh sieve but be held back by a 60-mesh sieve. Rinse twice with 6N hydrochloric acid and three times with distilled water.

6.6. Cadmium column. Clean 10 g of new or used cadmium with 50 mL of 6N HCl for 1 min. Decant and repeat. Rinse cadmium with distilled water three times. Decant water and add 100 mL of 2% $CuSO_4 \cdot 5H_2O$. Decant and wash thoroughly (10 times) with distilled water. Pack cadmium into a 10-in. length of 0.081-in.-i.d. Tygon tubing.

7. Calibration and Standards

7.1. NO_3-N stock standard A (1000 mg/L). Dissolve 7.218 g potassium nitrate in 0.2% H_2SO_4.

7.2. Stock standard B. Dilute 5 mL of stock A to 250 mL with distilled water. Prepare fresh daily.

7.3. Working standards. Pipette standard B into 100-mL volumetric flasks and dilute to volume with distilled water. Prepare fresh daily.

Standard B (mL)	NO_3-N (mg/L)
10.0	2.0
8.0	1.6
6.0	1.2
4.0	0.8
2.0	0.4

7.4. Set the base line to zero using the zero knob on the colorimeter while pumping 0.2% H_2SO_4 and with all pump tubes in their respective reagents. Set the highest concentration standard at 100 on the chart paper using the gain knob. Lower concentration standards should read at 80, 60, 40, and 20 respectively. Record chart readings of standards in a Laboratory notebook.

8. Procedure

8.1. Turn on the detector, heating bath, injection module, timer, and valve controller and allow to warm up for 30 min. Place the sampler wash line in distilled water and the waste lines in the proper waste container.

8.2. Place the nitrate/nitrite manifold in the valve controller chassis and attach the sample loop between No. 1 and No. 4 ports. Attach the sampler wash line at No. 6 port and the carrier line at No. 2 port. The lines from the No. 3 and No. 5 ports go to the manifold and pump respectively. When operating in dual channel mode, the No. 5 port of channel 1 connects to the No. 6 port of channel 2.

8.3. Set up the manifold, injection loop, and reagent and waste lines. Set the interference filter at 520 nm and the flow cell to 10 mm and 80 μL. Set the injection timing as follows:

- Pump speed 35
- Cycle period 40 s
- Load period 15 s
- Inject period 25 s
- Sample loop 17 cm

8.4. Stretch the pump tubes across pump cassettes and snap cassettes into place. Lift the tension adjustment levers straight up. Check for system leaks or bubbles.

8.5. Place wash, carrier, and reagent lines in proper receptacles, insert cadmium column, and pump until stable base line is established. Set colorimeter and recorder to zero base line. Recorder is normally run at 100X and 20 mV with a chart speed of 0.1 mm/s. Set gain on colorimeter to 160.

8.6. Dilute samples to read <2.0 mg. Dilute the 50 monthlies 1:500 (2 mL in 200 mL, then 20 mL of 1:100 dilution to 100 mL). Environmental samples and 257 monthlies are undiluted. Adjust the pH to read between 5 and 7.

8.7. Load the carousel. Place duplicate aliquots of the five standards in positions 1–10 (highest concentration to lowest). Place duplicate aliquots of the blank, quality control samples, and samples to be analyzed beginning at position 11. The sample load must include at least 10% duplicates, 10% spikes, and 10% quality control samples. To spike a sample, add 1 mL of stock standard A. Place blanks at positions 19 and 20 to check base-line drift. If a second carousel is required, a midrange standard is placed in positions 1 and 2. If this standard does not agree within $\pm$ 2 chart divisions of the previous run, the complete set of standards must be rerun.

8.8. When determinations are completed, remove cadmium column, place reagent tubes in distilled water, and rinse the system for a minimum of 10 min. After rinsing, remove the wash, carrier, and reagents from the water and pump air until all visible liquid is removed from the system. Remove the pump cassettes and shut off power to all units.

9. Calculations

9.1. Record chart readings in a Laboratory notebook. The duplicate readings are normally recorded and reported. A very high sample, however, may bias the first peak of a low sample that follows. In this case both values are recorded, but only the second peak value is reported.

9.2. The factor to convert from chart reading to concentration can be calculated as follows:

$$F = \frac{Sc}{100} ,$$

where F = factor and
Sc = concentration of highest standard (mg/L).

$$C = F \times R \times D ,$$

where C = concentration of sample (mg/L),
F = factor,
R = chart reading, and
D = dilution.

9.3. Final concentration of NO_3-N is calculated as follows:

$$C = (N_3 + N_2) - N_2 ,$$

where C = final concentration of NO_3-N in (mg/L),
N_3 = concentration of NO_3-N in (mg/L), and
N_2 = concentration of NO_2-N (mg/L).

9.4. Spike recovery of NO_3-N should be 40 mg/L ± 8 (allowable) or ± 4 (desirable).

$$R = Cs - C ,$$

where R = amount recovered (mg/L),
Cs = concentration of spiked sample (mg/L), and
C = concentration of unspiked sample (mg/L).

9.5. Percent recovery should be between 85% and 115%.

$$\%R = \frac{R \times 100}{A} ,$$

where %R = percent recovery,
R = amount recovered (mg/L), and
A = amount added (mg/L).

10. Source Materials

10.1. QuikChem Method No. EPA-10-107-04-1-C (Lachat Instruments, Mequon, Wisconsin, 1986).

10.2. American Public Health Association, American Waterworks Association, and Water Pollution Control Federation, *Standard Methods for the Examination of Water and Wastewater*, 16th ed., Method 418F (American Public Health Association, Washington, DC, 1985).

10.3. Environmental Monitoring and Support Laboratory, *Methods for Chemical Analysis of Water and Waste*, Method 353.2 (Office of Research and Development, U.S. Environmental Protection Agency, Cincinnati, Ohio, 1983).

NITRATE NITROGEN IN WATER AND WASTE WATER — AUTO ANALYZER

Analyte: Nitrate Nitrogen	**Method No.:** WI290
Matrix: Water and waste water	**Range:** 0.04 - 2.0 mg/L
Procedure: Automated colorimetry	**Detection Limit:** 0.04 mg/L
	Accuracy and Precision: 106% ± 9% RSD
Effective Date: 11/15/80 to 01/01/90	**Author:** Mary Carol Williams

SAFETY NOTE: Before beginning this procedure, read all of the Material Safety Data Sheets for the chemicals listed in Section 6. Read Section 4.3 of the HSE-9 Safety Manual for information on personal protective clothing and equipment.

1. Principle of Method

1.1. Complexing agent (EDTA) in ammonium chloride diluent is added to the sample to prevent metal interferences.

1.2. Diluted sample is pumped through the copper-cadmium reducing column to reduce NO_3^- to NO_2^-.

1.3. The NO_2^- ion reacts with sulfanilamide under acidic conditions to form a diazo compound. This compound then couples with N-(1-naphthyl)ethylenediamine dihydrochloride to form a reddish-purple azo dye that is discriminated by the 520-nm interference filter.

2. Accuracy and Precision

2.1. The determination of NO_3-N in 36 EPA WP481/1 reference samples (0.18 ± 0.02 mg/L) over a period of 12 months had a mean of 0.19 mg/L and a relative standard deviation of 9%.

2.2 The relative standard deviation of 32 composite determinations for NO_3-N made over a period of 12 months was 1.5% at the 90-mg/L-concentration level.

2.2. Thirty NO_3-N samples spiked at 40 mg/L over a period of 12 months resulted in an average recovery of 99% and a relative standard deviation of 9.5%. The percent recovery ranged from 85% to 120%.

3. Interferences

3.1. Metal ions (Cu^{+2}, Hg^{+2}) produce a positive error because of absorption bands in the region of color measurement. Add EDTA to the samples to eliminate this interference.

3.2. High concentrations of reducing substances ($SO_3^{=}$, $S^{=}$) will adversely affect nitrate reduction by the copper-cadmium column.

3.3. Samples that contain large concentrations of oil and grease will coat the surface of the cadmium. Eliminate this interference by pre-extracting the sample with an organic solvent.

3.4. Build up of suspended matter in the reduction column restricts sample flow. Since nitrate is soluble, the sample may be prefiltered.

4. Collection and Storage of Samples

4.1. Collect samples in polyethylene bottles. Nonacid samples may be used if analysis is completed within 24 h. These samples should be preserved by refrigeration at 4°C.

4.2. Acidify water solutions to pH <2 with concentrated H_2SO_4 (2.0 mL concentrated H_2SO_4/L) for long-term storage. Analysis of acid-preserved samples must be completed within 28 days. Nitrate may be lost because of reduction to nitrite or bacterial action in nonacid samples.

5. Apparatus

5.1. Sampler IV: equipped with a 40-slot sample carousel and a 40/h, 4:1 sampling cam, Technicon, Tarrytown, New York.

5.2. Proportioning pump: Technicon, Tarrytown, New York.

5.3. Nitrate manifold: equipped with pump tubes, mixing coils, and copper-cadmium reducing column, Technicon, Tarrytown, New York.

5.4. Colorimeter: equipped with 520-nm filter and 1.5 by 2.0-mm flow cell, Technicon, Tarrytown, New York.

5.5. Dual pen strip chart recorder: Technicon, Tarrytown, New York.

5.6. Pipettes: class A, volumetric, various sizes.

5.7. Pipettes: 1-mL, Eppendorf.

5.8. Flasks: class A, volumetric, various sizes.

5.9. Bottles: 500-mL, clear and amber glass.

6. Reagents

6.1. Ammonium chloride reagent. Dissolve 85 g ammonium chloride and 0.10 g sodium salt of ethylenediamine tetraacetic acid in 900 mL of distilled water. Adjust pH to 8.5 with concentrated ammonium hydroxide. Dilute to 1000 mL. Add 0.5 mL Brij.

6.2. Brij-35 (30% solution). Technicon, Tarrytown, New York.

6.3. Color reagent. To approximately 350 mL of distilled water, add 50 mL of concentrated phosphoric acid and 20 g of sulfanilamide. Dissolve completely. Add 1.0 g of N-(1-naphthyl)ethylenediamine dihydrochloride. Dilute to 500 mL with distilled water. Add 0.25 mL of Brij. Store in an amber bottle and refrigerate. Prepare fresh monthly.

6.4. Hydrochloric acid (6N). Dilute 50 mL of concentrated HCl to 100 mL with distilled water.

6.5. Copper sulfate solution (2%). Dissolve 20 g of $CuSO_4 \cdot 5H_2O$ in 500 mL of distilled water and dilute to 1 L.

6.6. Cadmium powder.

CAUTION: Wear gloves. Collect and store all waste cadmium. It is very toxic and also carcinogenic.

Grind and size cadmium metal to pass through a 25-mesh sieve but be held back by a 60-mesh sieve. Rinse metal twice with 6N hydrochloric acid and three times with distilled water.

6.7. Cadmium column. Clean 10 g of new or used cadmium with 50 mL of 6N HCl for 1 min. Decant and repeat. Rinse cadmium with distilled water three times. Decant water and add 100 mL of 2% $CuSO_4 \cdot 5H_2O$ and stir until no blue color remains. Rinse and repeat the $CuSO_4 \cdot 5H_2O$ addition. Decant and wash thoroughly (10 times) with distilled water. Pack cadmium into a 10-in. length of 0.081-in.-i.d. Tygon tubing.

7. Calibration and Standards

7.1. NO_3-N stock standard A (1000 mg/L). Dissolve 7.218 g of potassium nitrate in 0.2% H_2SO_4.

7.2. Stock standard B. Dilute 5 mL of stock A to 250 mL with distilled water. Prepare fresh daily.

7.3. Working standards. Pipette stock standard B into a 100-mL volumetric flask. Dilute to volume with distilled water. Prepare fresh daily.

Standard B (mL)	NO_3-N (mg/L)
10.0	2.0
8.0	1.6
6.0	1.2
4.0	0.8
2.0	0.4

7.4. Set the base line to zero using the base-line control knob on the colorimeter while pumping distilled water and with all pump tubes in their respective reagents. Place the cadmium column in line after the reagents have been pumped through the reagent lines. Set the highest concentration standard at 100 on the chart paper using the std. cal. knob. Lower concentration standards should read at 80, 60, 40. and 20 respectively. Record chart readings of standards in a Laboratory notebook.

8. Procedure

8.1. Turn on the colorimeter and recorder. Allow to warm up for 30 min.

8.2. Attach the nitrate manifold in line between the pump and colorimeter. Attach the air line to the segmenter tube on the pump. Stretch the pump tubes across the brackets. Snap the paten into place. The pump will turn on automatically. Place reagent lines in distilled water and allow system to wash for 20 min.

8.3. Place lines into the proper reagents and allow the pump to run until a steady base line is achieved. Set the base line to zero. Check the system for uniform bubble pattem, leaks, and adequate reagent supply.

8.4. Rinse all glassware used in preparation of reagents, standards, and sample dilutions with distilled water before use. Rinse sample cups with diluted sample twice before final filling.

8.5. Dilute samples to read <2.0 mg/L of NO_3. Samples from TA-50 should be diluted 1:500 (2 mL to 200 mL, then 20 mL of 1:100 dilution to 100 mL). Samples from DP site are not diluted. Adjust the pH of DP site samples to read between 5 and 7. The sample load must include at least 10% spikes, 10% duplicates, and 10% quality control samples. To spike a sample, add 1.0 mL of the 1000 mg/L NO_3-N standard to 25 mL of sample. Dilute appropriately. Concentration of the spike is 40 mg/L. Dilution adjustment may be necessary as evident on the strip chart output. Samples reading <10 units on the chart should be rerun at higher concentration if possible.

8.6. Load the carousel. Place duplicate standards in positions 1-10 (highest concentration to lowest). Place duplicate sample aliquots in the carousel in the following order: quality control samples, monthlies, natural waters, and, rarely, drinking water. Place blanks in positions 19 and 20 to check base-line drift. Insert a pin at the last position to automatically stop the carousel. If a second carousel is required, place a midrange standard in positions 1 and 2 to check reproducibility of the calibration curve. If this standard does not agree within ± 2 chart divisions of the previous run, the complete set of standards must be rerun.

8.7. When determinations are completed, remove the cadmium column. Place the reagent tubes in distilled water and rinse the system for a minimum of 10 min. Shut off power to the colorimeter and recorder. After rinsing, remove the reagent and wash tubes from the solutions and pump air until all visible liquid is removed from the system. Shut down the pump by removing the paten. Release the pump tubes from the brackets.

9. Calculations

9.1. Record chart readings in a Laboratory notebook. The duplicate readings are normally recorded and reported. A very high sample, however, may bias the first peak of a low sample that follows. In this case both values are recorded, but only the second peak value is reported.

9.2. The factor to convert from chart reading to concentration can be calculated as follows:

$$F = \frac{SC}{100} ,$$

where F = factor and
Sc = concentration of highest standard (mg/L).

$$C = F \times R \times D ,$$

where C = concentration of NO_3-N and NO_2-N in sample (mg/L),
F = factor,
R = chart reading, and
D = dilution.

9.3. Final concentration of NO_3-N is calculated as follows:

$$C_f = (N_3 + N_2) - N_2 \quad ,$$

where C = final concentration of NO_3-N in (mg/L),
N_3 = concentration of NO_3-N in (mg/L), and
N_2 = concentration of NO_2-N in (mg/L).

9.4. NO_3-N spike recovery should be 40 mg/L ± 8 (allowable) or ± 4 (desirable).

$$R = Cs - C \quad ,$$

where R = amount recovered (mg/L),
Cs = concentration of spiked sample (mg/L), and
C = concentration of unspiked sample (mg/L).

9.5. Percent recovery should be between 85% and 115%.

$$\%R = \frac{R \times 100}{A} \quad ,$$

where %R = percent recovery,
R = amount recovered (mg/L), and
A = amount added (mg/L).

10. Source Materials

10.1. Technicon Industrial Method No. 100-70 W (Tarrytown, New York, 1977).

10.2. American Public Health Association, American Waterworks Association, and Water Pollution Control Federation, *Standard Methods for the Examination of Water and Wastewater*, 16th ed., Method 418F (American Public Health Association, Washington, DC, 1985).

10.3. Environmental Monitoring and Support Laboratory, *Methods for Chemical Analysis of Water and Waste*, Method 353.2 (Office of Research and Development. U.S. Environmental Protection Agency, Cincinnati, Ohio, 1983).

NITRITE NITROGEN IN WATER AND WASTE WATER — AUTO ANALYZER

Analyte: Nitrite Nitrogen	**Method No.:** WI300
Matrix: Water and waste water	**Range:** 0.02 - 1.0 mg/L
Procedure: Automated colorimetry	**Detection Limit:** 0.02 mg/L
	Accuracy and Precision: 96% ± 2% RSD
Effective Date: 11/15/80 to 01/01/90	**Author:** Mary Carol Williams

SAFETY NOTE: Before beginning this procedure, read all of the Material Safety Data Sheets for the chemicals listed in Section 6. Read Section 4.3 of the HSE-9 Safety Manual for information on personal protective clothing and equipment.

1. Principle of Method

1.1. The NO_2^- ion reacts with sulfanilamide under acidic conditions to form a diazo compound.

1.2. The diazo compound couples with N-(1-naphthyl)ethylenediamine dihydrochloride to form a reddish-purple azo dye that is discriminated by the 520-nm interference filter.

1.3. Complexing agent (EDTA) in ammonium chloride diluent is added to the sample to prevent metal interferences.

2. Accuracy and Precision

2.1. Two samples spiked with 4 mg/L of NO_2-N over a period of 12 months had an average recovery of 96% and a relative standard deviation of 2%. The percent recovery ranged from 95% to 98%.

3. Interferences

3.1. Metal ions (Cu^{+2} Hg^{+2}) produce a positive error because of absorption bands in the region of color measurement. Add EDTA to the samples to eliminate this interference.

3.2. High concentrations of oxidizing or reducing substances will adversely affect nitrite concentration.

3.3. Nitrate may cause positive interference because of reduction to nitrite.

4. Collection and Storage of Samples

4.1. Collect samples in polyethylene bottles. Nonacid samples may be used if analysis is completed within 24 h. These samples should be preserved by refrigeration at 4°C.

4.2. Water solutions are acidified to pH <2 with concentrated H_2SO_4 (2.0 mL H_2SO_4/L) for long-term storage. Complete analysis within 48 h.

5. Apparatus

5.1. Sampler IV: equipped with a 40-slot sample carousel and a 40/h, 4:1 sampling cam, Technicon, Tarrytown, New York.

5.2. Proportioning pump: Technicon, Tarrytown, New York.

5.3. Nitrate manifold: equipped with pump tubes and mixing coils, but the copper-cadmium reducing column is removed, Technicon, Tarrytown, New York.

5.4. Colorimeter: equipped with 520-nm filter and 1.5 by 2.0-mm flow cell, Technicon, Tarrytown, New York.

5.5. Dual pen strip chart recorder: Technicon, Tarrytown, New York.

5.6. Pipettes: class A, volumetric, various sizes.

5.7. Pipettes: 1-mL, Eppendorf.

5.8. Flasks: class A, volumetric, various sizes.

6. Reagents

6.1. Ammonium chloride reagent. Dissolve 85 g ammonium chloride and 0.10 g sodium salt of ethylenediamine tetraacetic acid in 900 mL of distilled water. Adjust pH to 8.5 with concentrated ammonium hydroxide. Dilute to 1000 mL. Add 0.5 mL Brij.

6.2. Brij-35 (30% solution). Technicon, Tarrytown, New York.

6.3. Color reagent. To approximately 350 mL of distilled water, add 50 mL concentrated phosphoric acid and 20 g of sulfanilamide. Dissolve completely. Add 1.0 g of N-(1-naphthyl)ethylenediamine dihydrochloride. Dilute to 500 mL with distilled water. Add 0.25 mL of Brij. Store in an amber bottle and refrigerate. Prepare fresh monthly.

6.4. Sulfuric acid (reagent-grade, 0.2%). Add 2.0 mL of concentrated sulfuric acid per liter of distilled water.

7. Calibration

7.1. NO_2-N stock standard A (1000 mg/L). Dissolve 0.4926 g sodium nitrite in 0.2% H_2SO_4.

7.2. Stock standard B (10 mg/L). Dilute 10 mL of stock A to 100 mL with 0.2% H_2SO_4. Prepare fresh daily.

7.3. Working standards. Pipette stock B into 100 mL volumetric flasks. Dilute to volume with 0.2% H_2SO_4. Prepare fresh daily.

Standard B (mL)	NO_2-N (mg/L)
10.0	1.0
8.0	0.8
6.0	0.6
4.0	0.4
2.0	0.2

7.4. Set the base line to zero using the base-line control knob on the colorimeter while pumping 0.2% H_2SO_4 instead of sample and with all pump tubes in their respective reagents. Set the highest concentration standard at 100 on the chart paper using the std. cal. knob. Lower concentration standards should read at 80, 60, 40, and 20 respectively. Record chart readings of standards in a Laboratory notebook.

8. Procedure

8.1. Turn on the colorimeter and recorder. Allow to warm up for 30 min.

8.2. Attach the nitrate manifold in line between pump and colorimeter. Attach the air line to the segmenter tube on the pump. Stretch the pump tubes across the brackets. Snap the paten into place. The pump will turn on automatically. Place reagent lines in distilled water and allow the system to wash for 20 min.

8.3. Place lines into the proper reagents and allow the pump to run until a steady base line is achieved. Set the base line to zero. Check the system for uniform bubble pattern, leaks, and adequate reagent supply.

8.4. Rinse all glassware used in preparation of reagents, standards, and sample dilutions with distilled water before use. Rinse sample cups with diluted sample twice before final filling.

8.5. Monthly and environmental samples will usually be read undiluted. The sample load must include at least 10% spikes and 10% quality control samples. To spike a sample, add 1.0 mL of the 10 mg/L NO_2-N standard to 25 mL of sample. Dilute appropriately. Concentration of the spike is 0.4 mg/L. Dilution adjustment may be necessary as evident on the strip chart output.

8.6. Load the carousel. Place duplicate standards in positions 1-10 (highest concentration to lowest). Place duplicate sample aliquots in the carousel in the following order: composites, quality control samples, weeklies, natural waters, and, rarely, drinking water. Place blanks in positions 19 and 20 to check base-line drift. Insert a pin at the last position to automatically stop the carousel. If a second carousel is required, place a midrange standard in positions 1 and 2 to check reproducibility of the calibration curve. If this standard does not agree within ± 2 chart divisions of the previous run, the complete set of standards must be rerun.

8.7. When determinations are completed, place the reagent tubes in distilled water and rinse the system for a minimum of 10 min. Shut off power to the colorimeter and recorder. After rinsing, remove the reagent and wash tubes from the solutions and pump air until all visible liquid is removed from the system. Shut down the pump by removing the paten. Release the pump tubes from the brackets.

9. Calculations

9.1. Record chart readings in a Laboratory notebook. The duplicate readings are normally recorded and reported. A very high sample, however, may bias the first peak of a low sample that follows. In this case both values are recorded, but only the second peak value is reported.

9.2. The factor to convert from chart reading to concentration can be calculated as follows:

$$F = \frac{Sc}{100} ,$$

where F = factor and
Sc = concentration of highest standard (mg/L).

$$C = F \times R \times D ,$$

where C = concentration of sample (mg/L),
F = factor,
R = chart reading, and
D = dilution.

9.3. Spike recovery of NO_2-N should be 0.4 mg/L ± 0.08 (allowable) or ± 0.04 (desirable).

$$R = Cs - C ,$$

where R = amount recovered (mg/L),
Cs = concentration of spiked sample (mg/L), and
C = concentration of unspiked sample (mg/L).

9.4. Percent recovery should be between 85% and 115%.

$$\%R = \frac{R \times 100}{A} ,$$

where %R = percent recovery,
R = amount recovered (mg/L), and
A = amount added (mg/L).

10. Source Materials

10.1. Technicon Industrial Method No. 100-70 W (Tarrytown, New York, 1977).

10.2. American Public Health Association, American Waterworks Association, and Water Pollution Control Federation, *Standard Methods for the Examination of Water and Wastewater*, 16th ed., Method 418F (American Public Health Association, Washington, DC, 1985).

10.3. Environmental Monitoring and Support Laboratory, *Methods for Chemical Analysis of Water and Waste*, Method 353.2 (Office of Research and Development, U.S. Environmental Protection Agency, Cincinnati, Ohio, 1983).

NITRITE NITROGEN IN WATER AND WASTE WATER — FLOW INJECTION

Analyte: Nitrite nitrogen	**Method No.:** WI310
Matrix: Water and waste water	**Range:** 0.02 - 1.0 mg/L
Procedure: Flow injection colorimetry	**Detection Limit:** 0.02 mg/L
	Accuracy and Precision: 100% ± 7% RSD
Effective Date: 09/01/86 to 01/01/92	**Author:** Mary Carol Williams

SAFETY NOTE: Before beginning this procedure, read all of the Material Safety Data Sheets for the chemicals listed in Sec. 6. Read Sec. 4.3 of the EM-9 Safety Manual for information on personal protective clothing and equipment.

1. Principle of Method

1.1. The NO_2^- ion reacts with sulfanilamide under acidic conditions to form a diazo compound.

1.2. This diazo compound couples with N-(1-naphthyl)ethylenediamine dihydrochloride to form a reddish-purple azo dye that is discriminated by the 520-nm interference filter.

2. Accuracy and Precision

2.1. The determination of NO_2-N in 15 in-house quality control samples (0.35 mg/L) over a period of 3 months had a mean of 0.35 mg/L and a standard deviation of ± 0.024 mg/L at the 1σ level.

2.2. Ten samples spiked with 0.4 mg/L of NO_2-N over a period of 7 months had an average recovery of 102% with a relative standard deviation (RSD) of 11%. The recoveries ranged from 88% to 125%.

3. Interferences

3.1. Metal ions (Cu^{+2}, Hg^{+2}) produce a positive error because of absorption bands in the region of color measurement. Add ethylenediaminetetraacetic acid (EDTA) to the samples to eliminate this interference.

3.2. High concentrations of oxidizing or reducing substances will adversely affect nitrite concentration.

3.3. Nitrate may cause positive interference because of reduction to nitrite.

4. Collection and Storage of Samples

4.1. Collect samples in polyethylene bottles. Nonacid samples may be used if analysis is completed within 24 h. These samples should be preserved by refrigeration at 4°C.

4.2. If long-term storage is necessary, acidify samples to pH <2 with concentrated H_2SO_4 and store at 4°C. Complete analysis of acid-preserved samples within 28 days.

5. Apparatus

5.1. Automatic sampler: Catalog No. 1100-100, QuikChem Systems, Lachat Instruments, Milwaukee, Wisconsin.

5.2. Sampler/valve controller: Catalog No. 1600-000, QuikChem Systems, Lachat Instruments, Milwaukee, Wisconsin.

5.3. Injection module—dual valve: Catalog No. 1000-600, equipped with sampler timer, QuikChem Systems, Lachat Instruments, Milwaukee, Wisconsin.

5.4. Multidetector chassis: Catalog No. 1300-000, equipped with visible colorimeter, Catalog No. 1301-000, QuikChem Systems, Lachat Instruments, Milwaukee, Wisconsin.

5.5. Proportioning pump: Catalog No. 1200-000, QuikChem Systems, Lachat Instruments, Milwaukee, Wisconsin.

5.6. Nitrate/nitrite manifold: Catalog No. 10-107-04-1-C, QuikChem Systems, Lachat Instruments, Milwaukee, Wisconsin.

5.7. Gilson dual-pen strip-chart recorder: Model N2, Gilson Medical Electronics, Denver, Colorado.

5.8. Pipettes: class A, volumetric, various sizes.

5.9. Pipettes: 1-mL, Eppendorf.

5.10. Flasks: class A, volumetric, various sizes.

5.11. Bottles: 1-L, amber glass.

6. Reagents

6.1. Sodium hydroxide (15 M). Dissolve 150 g of sodium hydroxide in 250 mL of distilled water.

7. Calibration and Standards

7.1. NO_2-N stock standard A (100 mg/L). Dissolve 0.4926 g sodium nitrite in 0.2% H_2SO_4.

7.2. NO_2-N stock standard B (10 mg/L). Dilute 10 mL of stock standard A to 100 mL with 0.2% H_2SO_4. Prepare fresh daily.

7.3. Working standards. Pipette stock B into 100 mL volumetric flasks and dilute to volume with 0.2% H_2SO_4. Prepare fresh daily.

Standard B (mL)	NO_2-N (mg/L)
10.0	1.0
8.0	0.8
6.0	0.6
4.0	0.4
2.0	0.2

7.4. Set the base line to zero using the zero knob on the colorimeter while pumping 0.2% H_2SO_4 instead of sample and with all pump tubes in their respective reagents. Set the highest concentration standard at 100 on the chart paper using the gain knob. Lower concentration standards should read at 80, 60, 40, and 20 respectively. Record chart reading of standards in a Laboratory notebook.

8. Procedure

8.1. Turn on the detector, heating bath, injection module, timer, and valve controller and allow to warm up for 30 min. Place the sampler wash line in distilled water and the waste lines in the proper waste container.

8.2. Place the nitrate/nitrite manifold in the valve controller chassis and attach the sample loop between No. 1 and No. 4 ports. Attach the sampler wash line at No. 6 port and the carrier line at No. 2 port. The lines from the No. 3 and No. 5 ports go to the manifold and pump respectively. When operating in dual channel mode, the No. 5 port of channel 1 connects to the No. 6 port of channel 2.

8.3. Set up the manifold, injection loop, and reagent and waste lines. Set the interference filter at 520 nm and the flow cell to 10 mm and 80 μL. Set the injection timing as follows:

- Pump speed 35
- Cycle period 40 s
- Load period 15 s
- Inject period 25 s
- Sample loop 17 cm

8.4. Stretch the pump tubes across pump cassettes and snap cassettes into place. Lift the tension adjustment levers straight up. Check for system leaks or bubbles.

8.5. Place wash, carrier, and reagent lines in proper receptacles and pump until a stable base line is established. Set colorimeter and recorder to zero base line. The recorder is normally run at 100X and 20 mV with a chart speed of 0.1 mm/s. Set the gain on the colorimeter to 160.

8.6. Load the carousel with five standards, a blank, quality control samples, and duplicate aliquots of samples to be analyzed. Environmental samples and monthlies are undiluted. The sample load must include at least 10% spikes and 10% quality control samples. To spike a sample, add 1.0 mL of the 10 mg/L NO_2-N standard to 25 mL of sample. Place blanks at positions 19 and 20 to check base-line drift. If a second carousel is required, place a midrange standard in positions 1 and 2. If this standard does not agree within $\pm$ 2 chart divisions of the previous run, the complete set of standards must be rerun.

8.7. When determinations are completed, place the reagent tubes in distilled water and rinse the system for a minimum of 10 min. After rinsing, remove the wash, carrier, and reagents from the water and pump air until all visible liquid is removed from the system. Remove the pump cassettes and shut off power to all units.

9. Calculations

9.1. Record chart readings in a Laboratory notebook. The duplicate readings are normally recorded and reported. A very high sample, however, may bias the first peak of a low sample that follows. In this case both values are recorded, but only the second peak value is reported.

9.2. The factor to convert from chart reading to concentration can be calculated as follows:

$$F = \frac{Sc}{100} ,$$

where F = factor and
Sc = concentration of highest standard (mg/L).

$$C = F \times R \times D ,$$

where C = concentration of sample (mg/L),
F = factor,
R = chart reading, and
D = dilution.

9.3. Spike recovery of NO_2-N should be 0.4 mg/L $\pm$ 0.08 (allowable) or $\pm$ 0.04 (desirable).

$$R = Cs - C ,$$

where R = amount recovered (mg/L),
Cs = concentration of spiked sample (mg/L), and
C = concentration of unspiked sample (mg/L).

9.4. Percent recovery should be between 85% and 115%.

$$\%R = \frac{R \times 100}{A} ,$$

where %R = percent recovery,
R = amount recovered (mg/L), and
A = amount added (mg/L).

10. Source Materials

10.1. QuikChem Method No. EPA-10-107-04-1-C (Lachat Instruments, Mequon, Wisconsin, 1986).

10.2. American Public Health Association, American Waterworks Association, and Water Pollution Control Federation, *Standard Methods for the Examination of Water and Wastewater*, 16th ed., Method 418F (American Public Health Association, Washington, DC, 1985).

10.3. Environmental Monitoring and Support Laboratory, *Methods for Chemical Analysis of Water and Waste*, Method 353.2 (Office of Research and Development, U.S. Environmental Protection Agency, Cincinnati, Ohio, 1983).

PHOSPHORUS IN WATER AND WASTE WATER — AUTO ANALYZER

Analyte: Phosphorus	**Method No.:** WI320
Matrix: Water and waste water	**Range:** 0.04 - 1.0 mg/L
Procedure: Digestion and automated colorimetry	**Detection Limit:** 0.04 mg/L
	Accuracy and Precision: 114% ± 16% RSD
Effective Date: 06/28/85	**Author:** Mary Carol Williams

SAFETY NOTE: Before beginning this procedure, read all of the Material Safety Data Sheets for the chemicals listed in Sec. 6. Read Sec. 4.3 of the EM-9 Safety Manual for information on personal protective clothing and equipment.

1. Principle of Method

1.1. The system is cleaned before the sample is run to remove possible contamination and coating from the tubes.

1.2. Samples are digested so that all phosphorus is in the orthophosphate form.

1.3. The orthophosphate-molybdate-antimony complex that is formed is reduced by ascorbic acid to an intensely blue-colored complex that is proportional to the phosphorus concentration.

1.4. A 660-nm interference filter is used to discriminate the resulting blue color.

1.5. A 37°C heating bath is used to increase the reaction rate.

2. Accuracy and Precision

2.1. The determination of phosphorus in 48 Environmental Protection Agency (EPA) WP481/5 (0.14 ± 0.05 mg/L) reference samples over a period of 12 months had a mean of 0.16 mg/L and a standard deviation of ± 0.022 mg/L at the 1σ level.

2.2. The relative standard deviation (RSD) of 22 composite determinations over a period of 12 months was 12% at a phosphorus concentration of 0.60 mg/L.

2.3. Twenty-six samples spiked with phosphorus at 0.40 mg/L over a period of 12 months resulted in an average recovery of 95% and an RSD of 10%. The percent recovery ranged from 83% to 110%.

3. Interferences

3.1. As much as 50 mg FeIII/L and 10 mg Cu/L can be tolerated.

3.2. Silica causes positive interference. For silica concentrations of 20, 50, and 100 mg/L, the phosphorus results will be high by 0.005, 0.015, and 0.025 mg/L respectively.

3.3. Salt concentrations up to 20% cause an error of less than 1%.

3.4. Because arsenic can be determined by similar methodology, it should be considered when present in high concentrations.

3.5. Nitrite or sulfide interferences may be eliminated by adding an excess of bromine water or a saturated potassium permanganate.

3.6. Distilled deionized water (DDW) must be used to eliminate possible interferences of ammonia and silica.

3.7. All glassware must be washed with hot 1:1 HCl and rinsed with distilled water repeatedly to remove all traces of phosphorus. Commercial detergents must be avoided.

4. Collection and Storage Samples

4.1. Collect samples in polyethylene bottles and acidify to pH <2 with concentrated sulfuric acid (2.0 mL concentrated H_2SO_4/L) immediately upon collection. Refrigerate pending analysis.

4.2. Complete analysis within 28 days.

5. Apparatus

5.1. Block digester: Model No. BD-40 with timer and digestion tubes. Bran Lubbe, Elmsford, New York.

5.2. Sampler IV: equipped with a 40-slot sample carousel and a 40/h, 4:1 sampling cam. Bran Lubbe, Elmsford, New York.

5.3. Proportioning pump: Bran Lubbe, Elmsford, New York.

5.4. Phosphate manifold: equipped with pump tubes, mixing coils, and 50°C heating bath. Bran Lubbe, Elmsford, New York.

5.5. Colorimeter: equipped with 660-nm filter and 50- by 1.5-mm flow cell. Bran Lubbe, Elmsford, New York.

5.6. Dual-pen strip-chart recorder: Bran Lubbe, Elmsford, New York.

5.7. Pipettes: class A, volumetric, various sizes.

5.8. Pipettes: 1-mL, Eppendorf.

5.9. Flasks: class A, volumetric, various sizes.

5.10. Bottles: 1-L, clear and amber glass.

5.11. Glass filter: Whatman, GF/C.

5.12. Buchner funnel.

5.13. Boiling chips: Hengar.

5.14. Centrifuge tubes: 100-mL, disposable.

6. Reagents

6.1. Distilled deionized water (DDW). Pass distilled water through an ion exchange column containing a mixture of both acidic cation and basic cation exchange resins.

6.2. Sulfuric acid (25%). Add 250 mL of concentrated sulfuric acid to approximately 600 mL of DDW in 1-L a volumetric flask. Cool and dilute to volume.

6.3. Mercuric sulfate solution. Dissolve 8.0 g of red mercuric oxide in 50 mL of 25% sulfuric acid. Dilute to 100 mL with 10% sulfuric acid.

6.4. Digestion solution. Add 200 mL of concentrated sulfuric acid to 700 mL of distilled water. Dissolve 133 g of potassium sulfate in this mixture. Add 25 mL of mercuric sulfate catalyst solution. Dilute to 1 L with DDW.

6.5. Aerosol 22. Sigma Chemical Co., St. Louis, Missouri.

6.6. Ascorbic acid solution. Dissolve 12.0 g ascorbic acid in 200 mL of DDW. Add 2.0 mL of Aerosol 22. Prepare fresh weekly.

6.7. System wash water solution. Add 1.0 mL of Aerosol 22 to 1000 mL of DDW.

6.8. Acid wash solution. Dissolve 31.7 g of K_2SO_4 in about 500 mL of DDW. Slowly add 48 mL of concentrated H_2SO_4. Dilute to 1000 mL with DDW.

6.9. Molybdate-antimony solution. Dissolve 4.0 g of ammonium molybdate and 0.1 g of antimony potassium tartrate in DDW and dilute to 500 mL. Add 0.5 mL of Aerosol 22. Store in an amber bottle. Prepare fresh each month.

6.10. Saline diluent. Dissolve 20 g of sodium chloride and 0.5 mL of Aerosol 22 in 1000 mL of DDW. Filter through two glass filters in a Buchner funnel. Prepare fresh each week.

6.11. Sodium hydroxide (20%). Dissolve 200 g of sodium hydroxide in 1 L of DDW.

6.12. Acid diluent. Add 20.0 g of NaCl to 500 mL of DDW. **SLOWLY** add 80 mL of concentrated sulfuric acid to this solution. Cool to room temperature. Dilute to 1 L. Prepare fresh each week.

6.13. Hydrogen peroxide (reagent-grade, 30%).

7. Calibraton and Standards

7.1. Phosphorus stock standard A (1000 mg/L). Dissolve 0.4394 g of potassium dihydrogen phosphate (KH_2PO_4) in approximately 60 mL of distilled water. Dilute to 100 mL with DDW.

7.2. Phosphorus stock standard B (10 mg/L). Dilute 2.0 mL of stock standard A to 200 mL with DDW. Prepare fresh each day.

7.3. Phosphorus stock standard C (1.0 mg/L). Dilute 10 mL of stock standard B to 100 mL with DDW. Prepare fresh each day.

7.4. Working standards. Pipette the following volumes of stock standard B or C into digestion tubes. Add 25 mL of digestion solution and 25 mL of DDW. Prepare fresh each day.

Stock Standard B (mL)	Phosphorus (mg/L)
5.0	1.0
4.0	0.8
2.0	0.4
1.0	0.2

Stock Standard C (mL)	Phosphorus (mg/L)
4.0	0.08
2.0	0.04

7.5. After digestion and system wash, set the base line to zero using the base-line control knob on the colorimeter while pumping acid diluent and with all pump tubes in their respective reagents. Set the highest-concentration standard at 100 on the chart paper using the std. cal. knob. The curve is not linear.

8. Digestion Procedure

8.1. Perform at least one day before colorimetric determination.

8.2. Run a set of standards and a DDW blank with each digestion. The sample load must include at least 10% quality control samples, 10% spikes, and 10% digested duplicates. Use standards as described in Step 7.4.

8.3. Add 25 mL of sample and 25 mL of digestion solution to the digestion tubes. To spike a sample, add 1.0 mL of phosphorus stock standard B to 25 mL of sample in a digestion tube. Mix on the vortex mixer. Add three or four Hengar boiling chips.

8.4. With the digestion tube rack in place, preheat the block digester to 200°C by setting the low-temperature control to 0°C and the high-temperature control to 200°C. Turn on the manual switch. When 200°C is attained, set the low-temperature control to 200°C and the high-temperature control to 380°C. Adjust the low-time control to 1-1/2 h and total time to 3 h. Turn on the automatic switch.

NOTE: Place a shield over the hood front to protect personnel from a sudden discharge of hot acid from the digestion tubes.

8.5. As soon as the heat cycle is completed, remove the rack containing the flasks and set aside to cool until no SO_3 fumes are evident. Samples should be dry. Add 50 mL of distilled water to each flask. Mix thoroughly with a vortex mixer. Allow precipitates to settle out. Decant each solution into 100-mL disposable polypropylene centrifuge tubes. Cap and label with sample number and date of digestion. This results in a 1:2 dilution (25 mL to 50 mL).

8.6. Dilute environmental samples that do not require digestion 1:2 with digestion solution.

8.7. Add about 25 mL of distilled water and a few drops of Aerosol 22 to clean the digestion tubes. Mix on the vortex mixer and scrub with a test-tube brush. Rinse with distilled water, 1:1 HCl, and DDW.

9. Auto Analyzer Setup

9.1. Turn on the colorimeter, heating bath, and recorder and allow to warm up for 30 min. Use acid wash diluent in the wash receptacle and a Teflon sample probe.

9.2. Attach the phosphorus manifold in line between the pump and colorimeter. Attach the air line to the segmenter tube on the pump. Stretch the pump tubes across the brackets. Snap the paten into place. The pump will start automatically. Wash all lines with system wash solution. Check for leaks and a uniform bubble pattern.

9.3. With the sample line in the wash receptacle and the saline and acid diluent lines in their respective reagents, place both the ascorbic acid and molybdate lines sequentially in the following solutions and pump for 5 min each: 20% sodium hydroxide, millipore water, 30% hydrogen peroxide, and DDW.

9.4. Place the ascorbic acid and molybdate lines in the system wash-water solution and pump for 5 min. Place these lines in their respective reagents and pump until a steady base line is achieved. Set the base line to zero. Check the system for a uniform bubble pattern, leaks, and an adequate reagent supply.

9.5. Condition the channel by running three midscale standards three times, with a 5-min wash between each set.

9.6. Dilution adjustment may be necessary as evident on the strip-chart output. Use a 1:1 mixture of DDW and digestion solution for all dilutions.

9.7. Rinse sample cups with 6 N HCl and with distilled water before adding standards or samples. Load the carousel. Place duplicate standards in positions 1-12 (highest concentration to lowest). Place duplicate sample aliquots in the carousel in the following order: quality control samples, monthlies, EPA grabs, and, rarely, drinking water. Place blanks in positions 19 and 20 to check baseline drift. Insert a pin at the last position to automatically stop the carousel. If a second carousel is required, place midrange standards in positions 1 and 2 to check reproducibility of the calibration curve. If this standard does not agree to within ± 2 chart divisions with the previous run, the complete set of standards must be rerun.

9.8. When determinations are completed, place the reagent tubes in distilled water and rinse the system for a minimum of 10 min. Shut off power to the heating bath, colorimeter, and recorder. After rinsing, remove the reagent and wash tubes from the solutions and pump air until all visible liquid is removed from the system. Shut down the pump by removing the paten. Release the pump tubes from the brackets.

9.9. Record chart readings in a Laboratory notebook. The duplicate readings are normally recorded and reported. A very high sample, however, may bias the first peak of a low sample that follows. In this case both values are recorded, but only the second peak value is reported.

10. Calculations

10.1. Individual values for standards and samples are entered into the LSQ program in the VAX under the EM-9 LIMS MISCELLANEOUS MENU to obtain the actual values for the samples. A typical terminal session is shown below.

```
EM-9 LIMS MISCELLANEOUS MENU

A.    MEAN
B.    STDDEV (standard deviation)
C.    ALLDATA-SEARCH (ARCHIVE-SEARCH)
D.    QA-HELP
G.    LINREG - Linear Regression
H.    POLY - Polynominal fitting
I.    LSQ - Least Squares fitting
Y.    RETURN TO MAIN LIMS MENU
Z.    EXIT FROM LIMS. RETURN TO YOUR USER PROMPT.

Enter the LETTER of your choice and <CR>
I

ENTER # OF PTS, MAXDEG (UP TO 2)
12, 2

PLOT TYPE: LIN=1, LOGX=2, LOGY=3, LOGXY=4
1

FORCE CURVE THROUGH ZERO? YES=1, NO=0
1

ENTER RESULT-&-STANDARD PAIRS, ONE AT A TIME
 100,    1
  100    1
84.5,  0.8
  87,  0.8
  39,  0.4
  40,  0.4
  18,   .2
  20,   .2
  16, 0.08
  15, 0.08
  10, 0.04
  10, 0.04
```

```
CONSTANT    =  -0.78261E-11
1 ST POWER  =   0.55435E-02
2 ND POWER  =   0.48913E-04

EVALUATE SINGLE VALUES?  YES=1, NO=0
1

ENTER # PTS TO EVALUATE, THEN SAMPLE RESULTS ONE AT A TIME
2
9
47
```

MEASURED	ACTUAL VALUE
9.00000	0.07800
47.00000	0.43000

10.2. Spike recovery of phosphorus should be 0.40 mg/L ± 0.08 (allowable) or ± 0.04 (desirable).

$$R = Cs - C \quad ,$$

where R = amount recovered (mg/L),
Cs = concentration of spiked sample (mg/L), and
C = concentration of unspiked sample (mg/L).

10.3. Percent recovery should be between 85% and 115%.

$$\%R = \frac{R \times 100}{A} \quad ,$$

where %R = percent recovery,
R = amount recovered (mg/L), and
A = amount added (mg/L).

11. Source Materials

11.1. Technicon Industrial Method No. 329-74 W/B (Tarrytown, New York, 1978).

11.2. American Public Health Association, American Waterworks Association, and Water Pollution Control Federation, *Standard Methods for the Examination of Water and Wastewater*, 16th ed., Method 424G (American Public Health Association, Washington, DC, 1985).

11.3. Environmental Monitoring and Support Laboratory, *Methods for Chemical Analysis of Water and Waste*, Method 365.4 (Office of Research and Development, US Environmental Protection Agency, Cincinnati, Ohio, 1983).

Revisions or additions to the procedure are marked (▒▒▒▒). Where a section heading is marked, the entire section has been revised.

SILICA IN WATER AND WASTE WATER — SPECTROPHOTOMETRIC

Analyte: Silica	**Method No.:** WI330
Matrix: Water and waste water	**Range:** 0.02 - 0.5 mg/L
Procedure: Colorimetry	**Detection Limit:** 0.02 mg/L
	Accuracy and Precision: 95% ± 14% RSD
Effective Date: 05/01/86 to 01/01/90	**Author:** Harry Patterson

SAFETY NOTE: Before beginning this procedure, read all of the Material Safety Data Sheets for the chemicals listed in Section 6. Read Section 4.3 of the HSE-9 Safety Manual for information on personal protective clothing and equipment.

1. Principle of Method

1.1. Soluble silica species react with molybdate under acidic conditions to form a yellow silicomolybdate complex.

1.2. This complex is reduced with 1-amino-2-naphthol-4-sulfonic acid (ANSA) and bisulfite to form a heteropoly blue complex that is read on a visible spectrophotometer at 815 nm.

2. Accuracy and Precision

2.1. Six analyses of an in-house quality control sample (50 ± 5 mg/L) over a period of 4 months had a mean of 47.3 mg/L and a relative standard deviation of 14%.

3. Interferences

3.1. The interference from phosphates is reduced by the addition of oxalic acid.

3.2. High fluoride concentrations can complex silica.

3.3. Silica contamination may be avoided by storing samples, standards, and reagents in plastic and using deionized, distilled water.

3.4. High silica concentrations may precipitate.

3.5. Oxidizing agents may interfere with color development.

4. Collection and Storage of Samples

4.1. Store samples in plastic bottles at 4°C.

4.2. Analysis must be completed within 28 days.

5. Apparatus

5.1. Spectrophotometer: Spectronic 88, Bausch & Lomb, Rochester, New York.

5.2. Beakers: 50-, 100-, and 250-mL.

5.3. Pipettes: class A, various sizes.

5.4. Filter paper: 12-cm, No. 54, Whatman.

5.5. Funnel: 6.5-cm, disposable.

5.6. Flasks: 50-mL, volumetric.

6. Reagents

6.1. Distilled deionized water (DDW). Pass distilled water through an ion exchange column containing a mixture of both acidic cation and basic cation exchange resin.

6.2. Hydrochloric acid (6N). Add 500 mL of concentrated HCl to 500 mL of distilled water. Mix.

6.3. Silicon standard A (1000 ppm). Fisher Scientific, Dallas, Texas.

6.4. Ammonium hydroxide (concentrated, reagent-grade).

6.5. Ammonium molybdate reagent. Dissolve 10 g of ammonium molybdate in DDW while stirring and warming to approximately 80°C. Dilute to 100 mL. Filter if necessary. Adjust to pH 7-8 with ammonium hydroxide.

6.6. Oxalic acid solution. Dissolve 10 g of oxalic acid in DDW and dilute to 100 mL.

6.7. Reducing agent. Dissolve 500 mg of ANSA and 1 g of Na_2SO_3 in 50 mL of distilled water with slight warming if necessary. Add this to a solution of 30 g $NaHSO_3$ in 150 mL of DDW. Filter and store in a plastic bottle in the refrigerator. Discard reagent when it becomes dark in color.

7. Calibration and Standards

7.1. Silica standard B (0.01 mg/mL). Dilute 2 mL of silica standard A to 200 mL with DDW.

8. Procedure

8.1. Rinse 50-mL volumetric flasks with 6N HCl and rinse five times with distilled water to remove all acid.

8.2. Run a distilled water blank with the samples.

8.3. Pipette 2-, 4-, 6-, 8-, and 10-mL aliquots of standard B silica into separate 50-mL volumetric flasks and label flasks consecutively 0.02, 0.04, 0.06, 0.08, 0.10. Use these samples for the calibration curve.

8.4. Pipette 1 mL of unknown sample into a 50-mL volumetric flask. Pipette 1 mL of a quality control sample into another 50-mL volumetric flask.

8.5. The sample load must include at least 10% duplicates, 10% spikes, and 10% quality control samples.

8.6. Spike 10% of the samples by adding 1 mL of standard B plus 1 mL of sample to a 50-mL volumetric flask.

8.7. Bring all 50-mL volumetric flasks up to a volume of 40 mL with distilled water.

8.8. Add 1 mL of 6N HCl and immediately add 2 mL of ammonium molybdate to each flask and mix well. Allow the color to develop for 5-10 min.

8.9. Add 1.5 mL of oxalic acid solution and mix. Allow the flask to stand for 2 min but not more than 15 min.

8.10. Add 2 mL of reducing agent. Mix. Bring to volume and mix well.

8.11. After 5 min, measure the blue color (which is stable up to 12 h) in a 10-mm path test tube in the Spectronic 88 with a wavelength setting of 815 nm. Zero the instrument with the blank. Record the absorbance of standards and samples in a Laboratory notebook.

9. Calculations

9.1. Prepare a calibration curve from the standard solutions. Plot the curve on linear paper with the silica concentration in mg/50 mL volumetric flask on the x-axis and absorbance on the y-axis.

9.2. Determine the concentration of silica in the samples from the standard curve.

$$C = \frac{Cm \times 1000}{V} ,$$

where C = SiO_2 (mg/L)
Cm = SiO_2 measured (mg/50 mL), and
V = volume of sample (mL).

9.3. Silica spike recovery should be 10 ± 2 mg/L.

$$R = Cs - C ,$$

where R = amount recovered (mg/L),
Cs = concentration of spiked sample (mg/L), and
C = concentration of unspiked sample (mg/L).

9.4. Percent recovery should be between 85% and 115%.

$$\%R = \frac{R \times 100}{A} ,$$

where %R = percent recovery,
R = amount recovered (mg/L), and
A = amount added (mg/L).

10. Source Materials

10.1. American Public Health Association, American Waterworks Association, and Water Pollution Control Federation, *Standard Methods for the Examination of Water and Wastewater*, 16th ed., Method 425C (American Public Health Association, Washington, DC, 1985).

SILICA IN WATER AND WASTE WATER — FLOW INJECTION

Analyte: Silica	**Method No.:** WI340
Matrix: Water and waste water	**Range:** 1.0 - 100 mg/L
Procedure: Flow injection colorimetry	**Detection Limit:** 1.0 mg/L
	Accuracy and Precision: 117% ± 6% RSD
Effective Date: 09/16/86	**Author:** Mary Carol Williams

SAFETY NOTE: Before beginning this procedure, read all of the Material Safety Data Sheets for the chemicals listed in Sec. 6. Read Sec. 4.3 of the EM-9 Safety Manual for information on personal protective clothing and equipment.

1. Principle of Method

1.1. Soluble silica species react with molybdate under acidic conditions to form a yellow silicomolybdate complex.

1.2. This complex is reduced with 1-amino-2-naphthol-4-sulfonic acid (ANSA) and bisulfite to form a heteropoly blue complex that absorbs monochromatic light at 650 nm or 820 nm.

2. Accuracy and Precision

2.1. The determination of SiO_2 in 18 in-house quality control samples (40.0 ± 40 mg/L) over a period of 6 months had a mean of 47 mg/L and a relative standard deviation (RSD) of 6%.

2.2. Eleven samples spiked with 20 - 40 mg/L of SiO_2 over a period of 6 months had an average recovery of 96% with an RSD of 4%. The recoveries ranged from 90% to 102%.

3. Interferences

3.1. The interference from phosphates is reduced by the addition of oxalic acid.

3.2. Tannin and large amounts of iron or sulfides interfere. Remove sulfides by boiling an acidified sample. Add ethylenediaminetetraacetic acid, disodium salt (Na_2EDTA) to eliminate the interference from iron.

3.3. Silica contamination may be avoided by storing samples, standards, and reagents in plastic and using distilled deionized water (DDW).

3.4. High fluoride concentrations can complex silica.

3.5. Oxidizing agents may interfere with color development.

3.6. High silica concentrations may precipitate.

4. Collection and Storage of Samples

4.1. Store samples in plastic bottles at 4°C.

4.2. Analyses must be completed within 28 days.

4.3. Filter all samples except drinking water.

5. Apparatus

5.1. Automatic sampler: Catalog No. 1100-100, QuikChem Systems, Lachat Instruments, Milwaukee, Wisconsin.

5.2. Sampler/valve controller: Catalog No. 1600-000, QuikChem Systems, Lachat Instruments, Milwaukee, Wisconsin.

5.3. Injection module—dual valve: Catalog No. 1000-600, equipped with sampler timer, QuikChem Systems, Lachat Instruments, Milwaukee, Wisconsin.

5.4. Multidetector chassis: Catalog No. 1300-000, with visible colorimeter, Catalog No. 1301-000, QuikChem Systems, Lachat Instruments, Milwaukee, Wisconsin.

5.5. Proportioning pump: Catalog No. 1200-000, QuikChem Systems, Lachat Instruments, Milwaukee, Wisconsin.

5.6. Silica manifold: Catalog No. 10-114-27-1-B, QuikChem Systems, Lachat Instruments, Milwaukee, Wisconsin.

5.7. Heating bath with circulator: Catalog No. 1000-500, QuikChem Systems, Lachat Insturments, Milwaukee, Wisconsin.

5.8. Gilson dual-pen strip-chart recorder: Model N2, Gilson Medical Electronics, Denver, Colorado.

5.9. Pipettes: class A, volumetric, various sizes.

5.10. Flasks: class A, volumetric, various sizes.

5.11. Plastic bottles: various sizes.

5.12. Flasks: 100-mL, volumetric, Nalgene. VWR Scientific, Los Alamos, New Mexico.

6. Reagents

NOTE: Use plastic bottles and Nalgene volumetric flasks for preparation and storage of all reagents and standards.

6.1. Distilled deionized water (DDW). Pass distilled water through an ion exchange column containing a mixture of both acidic cation and basic cation exchange resin.

6.2. Oxalic acid solution. Dissolve 50 g of oxalic acid in approximately 450 mL of distilled water and bring to 500 mL with DDW. Store in a plastic bottle.

6.3. Sulfuric acid (concentrated, reagent-grade).

6.4. Ammonium molybdate reagent. Dissolve 20 g of ammonium molybdate in approximately 400 mL of DDW. Add 8 mL of concentrated H_2SO_4 and bring to 500 mL with DDW. Store in a plastic bottle. Prepare fresh each month. Discard reagent if a precipitate or blue color is observed.

6.5. ANSA reagent. Dissolve 2 g of sodium sulfite in approximately 80 mL of DDW. Add 0.25 g of 1-amino-2-naphthol-4-sulfonic acid (Kodak #360). Dissolve and dilute to 100 mL with DDW.

6.6. Reducing agent. Dissolve 15 g of sodium bisulfite in approximately 250 mL of DDW and dilute to 300 mL with DDW.

6.7. Mixed reagent. Mix ANSA reagent and reducing agent in a plastic bottle. Add 4 mL of glycerol. Avoid light. Store under refrigeration. Discard reagent when it becomes dark in color (approximately 6 months). Tubing which carries this reagent clogs easily and needs frequent changing.

7. Calibration and Standards

7.1. SiO_2 stock standard A (1000 mg/L). Dissolve 4.7298 g of sodium metasilicate nonahydrate ($Na_2SiO_2 \times 9H_2O$) in approximately 800 mL of DDW and dilute to 1 L. Store in a plastic bottle. A commercially prepared standard from Fisher Scientific may be used.

7.2. Working standards. Make fresh daily. Pipette the following volumes of stock standard A into 100-mL Nalgene volumetric flasks. Dilute to volume with DDW.

Stock Standard A (mL)	SiO_2 (mg/L)
0.5	5
1.0	10
2.0	20
4.0	40
6.0	60
8.0	80
10.0	100

7.3. Set the base line to zero using the zero knob on the colorimeter while pumping DDW and with all pump tubes in their respective reagents. Set the highest-concentration standard at 100 on the chart paper using the gain knob. Lower-concentration standards should read at 80, 60, 40, 20, and 10 respectively. Record chart reading of standards in a Laboratory notebook.

8. Procedure

8.1. Turn on the detector, heating bath, injection module, timer, and valve controller and allow to warm up for 30 min. Place the sampler wash line in distilled water and the waste lines in the proper waste container.

8.2. Place the silica manifold in the valve controller chassis and attach the sample loop between the No. 1 and No. 4 ports. Attach the sampler wash line at the No. 6 port and the carrier line at the No. 2 port. The lines from the No. 3 and No. 5 ports go to the manifold and pump respectively. When operating in dual channel mode, the No. 5 port of channel 1 connects to the No. 6 port of channel 2.

8.3. Set up the manifold, injection loop, and reagent and waste lines. Set the interference filter at 820 nm and the flow cell to 10 mm and 80 μL. Set the injection timing as follows:

- Pump speed 35
- Cycle period 40 s
- Load period 10 s
- Inject period 30 s
- Sample loop 9 cm

8.4. Stretch the pump tubes across pump cassettes and snap cassettes into place. Lift the tension adjustment levers straight up. Check for system leaks or bubbles.

8.5. Place wash, carrier, and reagent lines in proper receptacles and pump until a stable base line is established. Set the colorimeter and recorder to zero base line. The recorder is normally run at 100X and 20 mV with a chart speed of 0.1 mm/s. Set the gain on the colorimeter so that the 100-mg/L standard peak falls at 95-100 chart units.

8.6. Load the carousel. Place duplicate aliquots of the five standards in positions 1-10 (highest concentration to lowest). Place duplicate aliquots of the blank, quality control samples, and samples to be analyzed beginning with position 11. The sample load must include at least 10% spikes and 10% quality control samples. To spike a sample (+ 20 mg SiO_2/L), add 1.0 mL of stock standard A to 50 mL of sample. Place blanks at positions 19 and 20 to check base-line drift. If a second carousel is required, run a set of 5 standards to start and add an extra QC after the last sample.

8.7. When determinations are completed, place the reagent tubes in distilled water and rinse the system for a minimum of 10 min. After rinsing, remove the wash, carrier, and reagent lines from the water and pump air until all visible liquid is removed from the system. Remove the pump cassettes and shut off power to all units.

8.8. Record chart readings in a Laboratory notebook. The duplicate readings are normally recorded and reported. A very high sample, however, may bias the first peak of a low sample that follows. In this case both values are recorded, but only the second peak value is reported.

9. Calculations

9.1. SiO_2 concentrations (mg/L) are calculated using the least squares program (LSQ) in the computer.

9.2. The SiO_2 spike recovery should be 20 mg/L ± 4 (allowable) or ± 2 (desirable).

$$R = Cs - C \quad ,$$

where R = amount recovered (mg/L),
Cs = concentration of spiked sample (mg/L), and
C = concentration of unspiked sample (mg/L).

9.3. Percent recovery should be between 85% and 115%.

$$\%R = \frac{R \times 100}{A},$$

where %R = percent recovery,
R = amount recovered (mg/L), and
A = amount added (mg/L).

10. Source Materials

10.1. QuikChem Method No. 10-114-27-1-B (Lachat Instruments, Milwaukee, Wisconsin, 1986).

10.2. American Public Health Association, American Waterworks Association, and Water Pollution Control Federation, *Standard Methods for the Examination of Water and Wastewater*, 16th ed., Method 425C (American Public Health Association, Washington, DC, 1985).

10.3. Environmental Monitoring and Support Laboratory, *Methods for Chemical Analysis of Water and Waste*, Method 370.1 (Office of Research and Development, US Environmental Protection Agency, Cincinnati, Ohio, 1983).

Revisions or additions to the procedure are marked (▒▒▒▒). Where a section heading is marked, the entire section has been revised.

SULFATE IN WATER AND WASTE WATER — FLOW INJECTION

Analyte: Sulfate	**Method No.:** WI350
Matrix: Water and waste water	**Range:** 1.0 - 100 mg/L
Procedure: Flow injection turbidimetry	**Detection Limit:** 1.0 mg/L
	Accuracy and Precision: 92% ± 8% RSD
Effective Date: 09/18/86 to 01/01/92	**Author:** Mary Carol Williams

SAFETY NOTE: Before beginning this procedure, read all of the Material Safety Data Sheets for the chemicals listed in Sec. 6. Read Sec. 4.3 of the EM-9 Safety Manual for information on personal protective clothing and equipment.

1. Principle of Method

1.1. The sulfate ion is precipitated in an acid medium with barium chloride to form barium sulfate crystals of uniform size. The precipitate is kept suspended by a colloid.

1.2. Light absorption of the barium sulfate is measured photometrically, and the sulfate ion concentration is determined by comparison with a standard curve.

2. Interferences

2.1. The determination of SO_4^{2-} in 8 Environmental Protection Agency WP1185 reference samples (20.0 ± 1.7 mg/L) over a period of 6 months had a mean of 18.4 mg/L and a standard deviation of ±1.6 mg/L at the 1σ level.

2.2. Twelve samples spiked with 40 - 100 mg/L of SO_4 over a period of 5 months had an average recovery of 103% with a relative standard deviation (RSD) of 7%. The recoveries ranged from 90 to 115%.

3. Interferences

3.1. Color or suspended materials in large amounts will interfere. Filtration may help.

3.2. Silica in excess of 500 mg/L will interfere.

3.3. It may not be possible to precipitate barium sulfate satisfactorily in waters containing large quantities of organic material.

4. Collection and Storage of Samples

4.1. Samples are collected in 1-L glass or plastic bottles and must be analyzed within 28 days. No preservative is required.

5. Apparatus

5.1. Automatic sampler: catalog no. 1100-100, QuikChem Systems, Lachat Instruments, Milwaukee, Wisconsin.

5.2. Sampler/valve controller: catalog no. 1600-000, QuikChem Systems, Lachat Instruments, Milwaukee, Wisconsin.

5.3. Injection module—dual valve: catalog no. 1000-600, equipped with sampler timer, QuikChem Systems, Lachat Instruments, Milwaukee, Wisconsin.

5.4. Multidetector chassis: catalog no. 1300-000, with visible colorimeter, Catalog No. 1301-000, QuikChem Systems, Lachat Instruments, Milwaukee, Wisconsin.

5.5. Proportioning pump: catalog no. 1200-000, QuikChem Systems, Lachat Instruments, Milwaukee, Wisconsin.

5.6. Sulfate manifold: catalog no. 10-116-10-1-A, QuikChem Systems, Lachat Instruments, Milwaukee, Wisconsin.

5.7. Gilson dual-pen strip-chart recorder: model N2, Gilson Medical Electronics, Denver, Colorado.

5.8. Pipettes: class A, volumetric, various sizes.

5.9. Flasks: class A, volumetric, various sizes.

5.10. Bottles: polyethylene, 1-L.

5.11. Beakers: 50-, 100-, and 500-mL.

6. Reagents

6.1. Distilled deionized water (DDW). Pass distilled water through an ion-exchange column containing a mixture of acidic cation and basic cation exchange resins.

6.2. Hydrochloric acid (6 M). Pour 50 mL of concentrated HCl into 50 mL of DDW. Stir.

CAUTION: FUMES!

6.5.3. In a 500-mL graduated beaker, bring 400 mL of water to a boil. Remove from heat. Add the polyvinyl alcohol suspension and the softened gelatin to the hot water. It is not necessary to transfer these quantitatively. Add 25 g of barium chloride dihydrate ($BaCl_2 \cdot 2H_2O$) and stir until dissolved.

6.5.4. The solution should be slightly turbid (cloudy). This is seed barium sulfate for the method. If it is clear, add stock sulfate standard solution (Step 7.1.) a drop at a time until turbidity appears. If the solution is very turbid, there is too much sulfate in the gelatin and a different lot or manufacturer should be sought.

6.5.5. Dilute the gelatin to 500 mL with distilled water, using the marks on the beaker. Stir.

7. Calibration and Standards

7.1. Stock sulfate standard A (1000 mg/L). To 900 mL of distilled water in a 1-L volumetric flask, add 1.814 g potassium sulfate (dried at 105°C for 1 h). Dilute to volume.

7.2. Working standards. Pipette standard A into 100-mL volumetric flasks. Dilute to volume with distilled water. Prepare fresh daily.

Standard A (mL)	$SO_4^{=}$ (mg/L)
1.0	10
2.0	20
4.0	40
6.0	60
8.0	80
10.0	100

7.3. Set the base line to zero using the zero knob on the colorimeter while pumping distilled water instead of sample and with all pump tubes in their respective reagents. Set the highest concentration standard at 100 on the chart paper using the gain knob. Lower concentration standards should read 80, 60, 40, 20, and 10 respectively. Record chart reading of standards in a Laboratory notebook.

8. Procedure

8.1. Turn on the detector, heating bath, injection module, timer, and valve controller and allow to warm up for 30 min. Place the sampler wash line in distilled water and the waste lines in the proper waste container.

8.2. Place the sulfate manifold in the valve controller chassis and attach the sample loop between No. 1 and No. 4 ports. Attach the sampler wash line at No. 6 port and the carrier line at No. 2 port. The lines from the No. 3 and No. 5 ports go to the manifold and pump respectively. When operating in dual channel mode, the No. 5 port of channel 1 connects to the No. 6 port of channel 2.

8.3. Set up the manifold, injection loop, and reagent and waste lines. Set the interference filter at 420 nm and the flow cell to 10 mm and 80 μL. Set the injection timing as follows:

- Pump speed 35
- Cycle period 60 s
- Load period 30 s
- Inject period 15 s
- Sample loop 100 cm

8.4. Stretch the pump tubes across the pump cassettes and snap cassettes into place. Lift the tension adjustment levers straight up. Check for system leaks or bubbles. Place the barium gelatin solution in the heating bath.

8.5. Place wash, carrier, and reagent lines in proper receptacles and pump until a stable base line is established. Set colorimeter and recorder to zero base line. The recorder is normally run at 100X and 20 mV with a chart speed of 0.1 mm/s. Set the gain on the colorimeter to 250.

8.6. Load the carousel. Place duplicate aliquots of the five standards in positions 1–10 (highest concentration to lowest). Place duplicate aliquots of the blank, quality control samples, and samples to be analyzed beginning at position 11. The sample load must include at least 10% spikes and 10% quality control samples. To spike a sample, add 1.0 mL of stock standard A to 25 mL of sample. Dilute appropriately. Place blanks at positions 19 and 20 to check base-line drift. If a second carousel is required, place a midrange standard in positions 1 and 2. If this standard does not agree within $\pm$ 2 chart divisions of the previous run, the complete set of standards must be rerun.

8.7. Base-line drift is sometimes observed, depending on the nature of the samples. This is most often caused by deposition of $BaSO_4$ on the flow cell. Clean the system with alkaline EDTA solution (65 g NaOH plus 6 g disodium per liter) by placing reagent and carrier lines into the solution, pumping at normal speed (35) for 5 to 10 min, and then pumping water. Gelatin containing too much sulfate can also cause base-line drift and noise.

8.8. When determinations are completed, place the reagent tubes in distilled water and rinse the system for a minimum of 10 min. After rinsing, remove the wash, carrier, and reagents from the water and pump air until all visible liquid is removed from the system. Remove the pump cassettes and shut off power to all units.

9. Calculations

9.1. Record chart readings in a Laboratory notebook. The duplicate readings are normally recorded and reported. A very high sample, however, may bias the first peak of a low sample that follows. In this case both values are recorded, but only the second peak value is reported.

9.2. The factor to convert from chart reading to concentration can be calculated as follows:

$$F = \frac{Sc}{100} ,$$

where F = factor and
Sc = concentration of highest standard (mg/L).

$$C = F \times R \times D ,$$

where C = concentration of sample (mg/L),
F = factor,
R = chart reading, and
D = dilution.

9.3. Spike recovery of $SO_4^{=}$ should be 40.0 mg/L ± 8.0 (allowable) or ± 0.4 (desirable).

$$R = Cs - C ,$$

where R = amount recovered (mg/L),
Cs = concentration of spiked sample (mg/L), and
C = concentration of unspiked sample (mg/L).

9.4. Percent recovery should be between 85% and 115%.

$$\%R = \frac{R \times 100}{A} ,$$

where %R = percent recovery,
R = amount recovered (mg/L), and
A = amount added (mg/L).

10. Source Materials

10.1. QuikChem Method No. 10-116-10-1-A (Lachat Instruments, Mequon, Wisconsin, 1986).

10.2. American Public Health Association, American Waterworks Association, and Water Pollution Control Federation, *Standard Methods for the Examination of Water and Wastewater*, 16th ed., Method 426C (American Public Health Association, Washington, DC, 1985).

10.3. Environmental Monitoring and Support Laboratory, *Methods for Chemical Analysis of Water and Waste*, Method 375.4 (Office of Research and Development, U.S. Environmental Protection Agency, Cincinnati, Ohio, 1983).

TURBIDITY OF WATER AND WASTE WATER — NEPHELOMETRIC

Analyte: Patriculates in suspension	**Method No.:** WI370
Matrix: Water and waste water	**Detection Limit:** 2 NTU
Procedure: Absorption by spectrophotometry	**Accuracy and Precision:** unknown
Effective Date: 10/14/87 to 01/06/92	**Author:** Harold P. Patterson

SAFETY NOTE: Before beginning this procedure, read all of the Material Safety Data Sheets for the chemicals listed in Sec. 7. Read Sec. 4.3 of the EM-9 Safety Manual for information on personal protective clothing and equipment.

1. Principle of Method

1.1. This method is based upon the absorption of light by particles suspended in solution. A standard suspension of formazin is prepared and a calibration curve of standards is generated in nephelometric turbidity units (NTU) versus absorption.

1.2. A working range of 0-40 NTU is used. Samples greater than 40 NTU are diluted before taking a final reading.

2. Detection Limit

2.1. A detection limit of 2 NTU can be expected.

3. Accuracy and Precision

3.1. Insufficient data available as of October 1990.

4. Interferences

4.1. The presence of floating debris and coarse sediments which settle out rapidly will give low readings. Finely divided air bubbles will affect the results in a positive manner.

4.2. The presence of true color, the color of water due to dissolved substances which absorb light, will cause turbidities to be low, although this effect is generally not significant with finished waters.

5. Collection and Storage of Samples

5.1. Preservation of the sample is not practical. Analysis should begin as soon as possible. Refrigeration or icing to 4°C, to minimize microbiological decomposition of solids, is recommended.

6. Apparatus

6.1. Beckman spectrophotometer: Model 35, Beckman Instruments, Inc., Scientific Instrument Division, Irvine, California.

6.2. Glass cuvettes: 4.2-mL UV-quartz, 10-cm path length, rectanglular. VWR Scientific, Los Alamos, New Mexico.

6.3. Pipettes: class A, 1-, 2-, 5-, and 10-mL.

6.4. Volumetric flasks: class A, 100-mL.

6.5. Analytical balance.

6.6. Weighing dishes: 30-mL, disposable.

7. Reagents

7.1. Distilled water.

7.2. Hydrazine sulfate.

7.3. Hexamethylenetetramine.

8. Calibration and Standards

8.1. AMCO-AEPA-1 standard, Advanced Polymer Systems, Redwood City, California.

9. Procedure

9.1. Stock formazin turbidity suspension.

9.1.1. Solution 1. Dissolve 1.00 g of hydrazine sulfate in distilled water and dilute to 100 mL.

9.1.2. Solution 2. Dissolve 10.00 g of hexamethylenetetramine in distilled water and dilute to 100 mL.

9.1.3. Mix 5 mL of Solution 1 with 5 mL of Solution 2 in a 100-mL volumetric flask. Allow to stand 24 h and dilute to volume. Mix well.

9.1.4. Prepare this stock turbidity suspension each month.

9.2. Standard formazin turbidity suspension.

9.2.1. Dilute 10.0 mL of stock turbidity suspension to 100 mL with distilled water. The turbidity of the suspension is defined as 40 NTU.

9.2.2. Dilute 5-, 2-, and 1-mL aliquots of the stock suspension to 100 mL with distilled water. Shake solutions well. The concentrations of these dilutions will be 20, 8, and 4 NTU respectively.

9.2.3. Be sure all air bubbles have disappeared. These suspensions are used to develop the standard curve with which unknown solutions are compared.

9.2.4. The standard and dilute standard turbidity suspensions should be prepared each week.

9.3. Read the absorbance of the above standards in the spectrophotometer at 254 nm, slit width of 1.75 mm (manual), and period equal to 4 s. Make a calibration plot of the absorbance versus the concentration in NTU.

9.4. Read the absorbance of the AMCO-AEPA-1 standard. Use the calibration curve to determine an NTU value. The value of this standard should be 4.39 ± 0.62 NTU.

9.5. Read the unkown samples as soon as possible. Determine the NTU value of the unknown from the calibration chart. If the value exceeds 40 NTU, prepare a dilution until the value obtained is less than 40 NTU. If a dilution is made on the sample, apply this factor to the final reading from the chart. Include 10% duplicates and 10% quality control samples with each batch.

10. Source Materials

10.1. Environmental Monitoring and Support Laboratory, *Methods for Chemical Analysis of Water and Waste*, Method 180.1, storet No. 00076 (Office of Research and Development, US Environmental Protection Agency, Cincinnati, Ohio, 1983).

10.2. American Public Health Association, American Waterworks Association, and Water Pollution Control Federation, *Standard Methods for the Examination of Water and Waste Water*, 14th ed., Method 214A (American Public Health Association, Washington, DC, 1975).

TOTAL DISSOLVED SOLIDS IN WATER AND WASTE WATER — FILTERABLE RESIDUE

Analyte: Total dissolved solids (TDS)	**Method No.:** WI400
Matrix: Water and waste water	**Range:** 10 - 20,000 mg/L
Procedure: Gravimetric analysis	**Detection Limit:** 1 mg/L
	Accuracy and Precision: 100% ± 4% RSD
Effective Date: 08/01/85	**Author:** Mary Carol Williams

SAFETY NOTE: Before beginning this procedure, read all of the Material Safety Data Sheets for the chemicals listed in Sec. 6. Read Sec. 4.3 of the EM-9 Safety Manual for information on personal protective clothing and equipment.

1. Principle of Method

1.1. A sample is passed through a prewashed glass filter to remove suspended solids.

1.2. A measured volume of filtrate is added to a preweighed evaporating dish and dried on a steam bath or hot plate.

1.3. The evaporating dish is placed in a drying oven set at 180°C for a minimum of 1 h. It is then removed and place in a desiccator jar to cool.

1.4. The evaporating dish is reweighed after cooling, and the total residue is calculated from the difference in weight.

2. Accuracy and Precision

2.1. The determination of total dissolved solids (TDS) in 59 in-house quality control samples (293 ± 20 mg/L) over a period of 12 months had a mean of 292 ± 11.7 mg/L.

2.2. Twenty-one samples spiked with 1.0 mg/L of NaCl over a period of 14 months resulted in an average recovery of 106% and a relative standard deviation (RSD) of 8%. The percent recovery ranged from 85% to 121%.

3. Interferences

3.1. Variation in porosity and washing of the glass filters will affect results.

3.2. Uniform drying time and cooling conditions are required to produce repeatable results because of bicarbonate-to-carbonate conversion and removal of occluded water.

3.3. Waters with considerable calcium, magnesium, chloride, and/or sulfate content may be hygroscopic and require prolonged drying, proper desiccation, and rapid weighing.

3.4. Too much residue in the evaporating dish will cause the residue to crust over and trap water that will not be driven off during drying. Limit total residue to approximately 200 mg.

3.5. Too little residue may result in erratic results because of weighing errors. Repeat results with less than 10 mg of residue using a 200-mL sample (dry two 100-mL aliquots).

4. Collection and Storage of Samples

4.1. Use nonacidified samples with no special precautions.

4.2. Complete analyses within 48 h.

5. Apparatus

5.1. Buchner funnel: 83-mm-diam. VWR Scientific, Los Alamos, New Mexico.

5.2. Filter flask: 500-mL. VWR Scientific, Los Alamos, New Mexico.

5.3. Glass filters: 7-cm, No. GF/C. VWR Scientific, Los Alamos, New Mexico.

5.4. Porcelain evaporating dishes: 100-mL. VWR Scientific, Los Alamos, New Mexico.

5.5. Steam bath or hot plate.

5.6. Drying oven.

5.7. Desiccator: with desiccant containing a color indicator of moisture concentration.

5.8. Analytical balance: 200-g capacity, capable of weighing to 0.1 mg.

6. Reagents

6.1. Sodium chloride spike solution (10%). Dissolve 100 g of NaCl in 1 L of distilled water.

6.2. Sodium hydroxide (1 N). Use DILUTE-IT solution and prepare according to product instructions.

6.3. Potassium dihydrogen phosphate (National Bureau of Standards [NBS] standard). Dry KH_2PO_4 in a desiccator. Weigh out 54.436 g and transfer to a 1-L volumetric flask. Add 180.2 mL of 1 N NaOH and dilute to volume with distilled water. Dilute 5 mL of this solution to 1 L with distilled water. The TDS value of this solution equals 293 mg/L.

7. Procedure

7.1. Dry evaporating dishes overnight in a drying oven set at 180°C

7.2. Cool evaporating dishes and store in a desiccator jar until needed. Weigh immediately before use and record weight in a Laboratory notebook.

7.3. Wash a GF/C glass filter in a Buchner funnel with three successive 20-mL volumes of distilled water. Continue suction to remove all traces of water and discard washings. Pass a measured amount of sample through the filter. Filtrate from Method No. WI410, "Total Suspended Solids in Water and Waste Water," may be used.

7.4. Transfer a measured volume of filtered sample (50 mL of raw monthly composites, 100 mL of final monthly composites, or 200 mL of natural or drinking water) to a preweighed evaporating dish. Record sample volume in a Laboratory notebook.

7.5. Add 10 mL of spike solution to 100 mL of the sample to be spiked. Include 10% spikes, 10% duplicates, and 10% quality control samples.

7.6. Evaporate the filtrate to dryness on a steam bath or hot plate set at 90°C.

7.7. Dry the evaporating dish for at least 1 h in a drying oven set at 180°C. Cool in a desiccator and reweigh the evaporating dish. Record the weight of the dish plus residue in a Laboratory notebook.

7.8. Repeat the drying cycle until the weight is constant to within ± 0.5 mg.

8. Calculations

8.1. Total dissolved solids.

$$TDS = \frac{(A - B) \times 1{,}000{,}000}{C} ,$$

where TDS = total dissolved solids (mg/L),
A = weight of dish plus residue (g),
B = weight of dish (g), and
C = volume of sample used (mL).

8.2. Spike recovery should be 1.0 mg/L ± 0.2 (allowable) or ± 0.1 (desirable).

$$R = Cs - C ,$$

where R = amount recovered (mg/L),
Cs = concentration of spiked sample (mg/L), and
C = concentration of unspiked sample (mg/L).

8.3. Percent recovery should be between 85% and 115%.

$$\%R = \frac{R \times 100}{A} ,$$

where %R = percent recovery,
R = amount recovered (mg/L), and
A = amount added (mg/L).

9. Source Materials

9.1. American Public Health Association, American Waterworks Association, and Water Pollution Control Federation, *Standard Methods for the Examination of Water and Wastewater*, 16th ed., Method 209B (American Public Health Association, Washington, DC, 1985).

9.2. Environmental Monitoring and Support Laboratory, *Methods for Chemical Analysis of Water and Waste*, Method 160.1 (Office of Research and Development, US Environmental Protection Agency, Cincinnati, Ohio, 1983).

Revisions or additions to the procedure are marked (▒▒▒▒). Where a section heading is marked, the entire section has been revised.

TOTAL SUSPENDED SOLIDS IN WATER AND WASTE WATER — NONFILTERABLE RESIDUE

Analyte: Total suspended solids (TSS)	**Method No.:** WI410
Matrix: Water and waste water	**Range:** 4 - 20,000 mg/L
Procedure: Gravimetric analysis	**Detection Limit:** 1 mg/L
	Accuracy and Precision: 93% ± 8% RSD
Effective Date: 01/02/84 to 01/01/92	**Author:** Harold P. Patterson

SAFETY NOTE: Before beginning this procedure, read Section 4.3 of the EM-9 Safety Manual for information on personal protective clothing and equipment.

1. Principle of Method

1.1. A measured volume of sample is passed through a prewashed glass filter.

1.2. The filter is dried to constant weight at 105°C and weighed.

2. Accuracy and Precision

2.1. The determination of total suspended solids (TSS) in Environmental Protection Agency quality control sample WP1187, concentration 2 (278 mg/L), run 20 times over a period of 11 months, had a value of 259 ± 20 mg/L at the 1σ level.

2.2. We are evaluating a commercially available solution of total suspended solids for spiking samples.

3. Interferences

3.1. Variation in porosity and washing of the glass filters will affect results.

3.2. Uniform drying time and cooling conditions are required to produce repeatable results because of bicarbonate-to-carbonate conversion and removal of occluded water.

3.3. Waters with considerable calcium, magnesium, chloride, and/or sulfate content may be hygroscopic and require prolonged drying, proper desiccation, and rapid weighing.

3.4. Large, nonrepresentative particles should be excluded.

4. Collection and Storage of Samples

4.1. Cool nonacidic samples to 4°C to minimize microbiological decomposition of solids.

4.2. Complete analysis within 7 days.

5. Apparatus

5.1. Buchner funnel: 54-mm-diam. VWR Scientific, Los Alamos, New Mexico.

5.2. Filter flask: 500-mL. VWR Scientific, Los Alamos, New Mexico.

5.3. Glass filters: 7.0-cm, Whatman 934-AH. VWR Scientific, Los Alamos, New Mexico.

5.4. Drying oven: VWR Scientific, Los Alamos, New Mexico.

5.5. Analytical balance: 10-g capacity, capable of weighing to 0.1 mg.

5.6. Sanpla Drykeeper Desiccator: VWR Scientific, Los Alamos, New Mexico.

6. Procedure

6.1. With the glass filter in place and vacuum on, wash the filter with three successive 20-mL volumes of distilled water. Continue suction to remove all traces of water and discard washings.

6.2. Dry the filters in an oven at 105°C for at least 1 h. Remove and cool in the desiccator for 15 min and weigh. Repeat the above drying-cooling-desiccating cycle until a constant weight is obtained (weight loss less than 0.5 mg). After weighing, handle the filter with forceps only.

6.3. Pass a measured amount of well-mixed sample (100-mL raw monthly composites) through the filter paper in a Buchner Funnel. Use a smaller aliquot when large amounts of suspended solids are present. Include 10% duplicate samples with each run.

6.4. Move the Buchner funnel to another filtering flask after all of the sample has been filtered. Rinse the residue with three successive 20-mL volumes of distilled water. The sample filtrate may be used for Method No. WI400, "Total Dissolved Solids in Water and Waste Water."

6.5. Remove the filter from the funnel. Dry in an oven set at 105°C to obtain a constant weight, as in Step 6.2.

7. Calculation

7.1. Total suspended solids.

$$TSS = \frac{(A - B) \times 1{,}000{,}000}{C},$$

where TSS = total suspended solids (mg/L),
A = weight of filter and residue (g),
B = weight of filter (g), and
C = volume on sample filter (mL).

8. Source Materials

8.1. American Public Health Association, American Waterworks Association, and Water Pollution Control Federation, *Standard Methods for the Examination of Water and Wastewater*, 16th ed., Method 209D (American Public Health Association, Washington, DC, 1985).

8.2. Environmental Monitoring and Support Laboratory, *Methods for Chemical Analysis of Water and Waste*, Method 160.2 (Office of Research and Development, US Environmental Protection Agency, Cincinnati, Ohio, 1983).

CALCIUM AND MAGNESIUM IN WATER AND WASTE WATER — IC

Analyte: Calcium and magnesium	**Method No.:** WI420
Matrix: Water and waste water	**Range:** 1 - 1000 mg/L
Procedure: Ion chromatography (IC)	**Detection Limit:** 1 mg/L
	Accuracy and Precision: Ca 113% ± 4% RSD Mg 102% ± 5% RSD
	Recovery: Ca 100% ± 9% RSD Mg 101% ± 13% RSD
Effective Date: 02/09/88 to 01/21/92	**Author:** Harold P. Patterson

SAFETY NOTE: Before beginning this procedure, read all of the Material Safety Data Sheets for the chemicals listed in Sec. 5. Read Sec. 4.3 of the EM-9 Safety Manual for information on personal protective clothing and equipment.

1. Principle of Method

1.1. Ions in the mobile (aqueous) phase are separated by their affinity for the stationary (resin) phase. The affinity is a function of resin type, ion size, ion charge, ion concentration, and matrix composition of the mobile phase.

1.2. The guard column acts as a trap to prevent contamination of the separator column. The separation actually begins on the guard column.

1.3. The mobile phase then passes through a micromembrane suppressor which is washed with a regenerant to remove the high background of the column eluant.

1.4. A conductivity meter continuously measures the conductivity of the mobile phase after the suppressor.

1.5. Unknowns are compared with standards of known concentration as a function of retention time on the resin.

2. Accuracy and Precision

2.1. An Environmental Protection Agency quality control (QC) sample, no. 00.01013, with a Ca concentration between 17.5 and 22.2 ppm and a Mg concentration between 4.18 and 5.62 ppm, was analyzed with prepared standards over a 6-

month period. The accuracy and precision (percent recovery ± relative standard deviation [RSD]) for Ca was 113% ± 4% and for Mg was 102% ± 5%.

3. Interferences

3.1. Sample ions must be in the same state as the standard. Complex ions will have different retention times than simple ions and may not elute from the column.

3.2. Samples with ionic strengths that differ significantly from the standards may have considerably different retention times than the standard.

3.3. High concentrations of one species in a sample may distort or swamp adjacent peaks.

4. Apparatus

4.1. Dionex 4000i chromatograph: Dionex Corp., 1228 Titan Way, Sunnyvale, California 94088-3603.

4.2. Dionex AI-400 data station: equipped with a mouse, Microsoft Windows, and AI-400 software. Dionex Corp., 1228 Titan Way, Sunnyvale, California 94088-3603.

4.3. Dionex Computer Interface Module (CIM): Dionex Corp., 1228 Titan Way, Sunnyvale, California 94088-3603.

4.4. Hewlett Packard Think-Jet printer: Holmans, 401 Wyoming Blvd., Albuquerque, New Mexico.

4.5. Autosampler: Dionex Corp., 1228 Titan Way, Sunnyvale, California 94088-3603.

4.6. CS 3 cation separator column equipped with CG3 guard column: Dionex Corp., 1228 Titan Way, Sunnyvale, California 94088-3603.

4.7. Volumetric flasks: class A, various sizes.

4.8. Pipettes: class A, various sizes.

4.9 Filtering apparatus: Millipore, with 0.45-μm filter. VWR Scientific, Los Alamos, New Mexico.

4.10. Filtering flask: 250-mL.

4.11. Auto-regen system for cation suppressor: Dionex Corp., 1228 Titan Way, Sunnyvale, California 94088-3603.

4.12. Glass bottles: 1-L, for delivery of column eluants. Dionex Corp., 1228 Titan Way, Sunnyvale, California 94088-3603.

4.13. Gas pressure regulator for He cylinder: VWR Scientific, Los Alamos, New Mexico.

4.14. Syringe: 10-cc, plastic, disposable.

4.15. Cation micromembrane suppressor (CMMS). Dionex Corp., 1228 Titan Way, Sunnyvale, California 94088-3603.

5. Reagents

5.1. Helium gas. Regulated to deliver 100 psi. Los Alamos National Laboratory Gas Plant.

5.2. Double-deionized water.

5.3 Calcium stock standard solution (1000 μg/mL). Spex Industries, 3880 Park Avenue, Edison, NJ 08820.

5.4 Magnesium stock standard solution (1000 μg/mL). Spex Industries, 3880 Park Avenue, Edison, NJ 08820.

5.5. Hydrochloric acid (1 N). Prepare from DILUT-IT standards as manufacturer directs. VWR Scientific, Los Alamos, New Mexico.

5.6. 2,3-Diaminopropionic acid monohydrochloride (DAP • HCl) (99%). Aldrich Chemical Co., VWR Scientific, Los Alamos, New Mexico.

5.7. Cation eluant. Add 1 L of water to a 2-L volumetric flask. Add 68 mL of 1 N HCl to the flask. Weigh out 2.54 g of DAP and add to the flask. Dissolve all salts. Dilute to volume and mix well.

5.8. Tetrabutylammonium hydroxide (TBAOH) (0.1 M). Dilute 100 mL of 55% TBAOH in a 2-L volumetric flask with distilled water. Dilute to volume and mix well. Dionex Corp., 1228 Titan Way, Sunnyvale, California 94088-3603.

5.9. Magnesium working standard solution (5 ppm). Pipette 5 mL of the 1000-μg/mL Mg stock standard solution into a 1-L volumetric flask and dilute to volume with double-deionized water.

5.10. Calcium working standard solution (20 ppm). Pipette 20 mL of the 1000-μg/mL Ca stock standard solution into a 1-L volumetric flask and dilute to volume with double-deionized water.

6. Calibration and Standards

6.1. QC sample no. 00.01009 is used to check the accuracy of the method and instrumentation. The following ranges are acceptable: for Mg, 4.18 to 5.62 mg/L; for Ca, 17.5 to 22.2 mg/L.

7. Procedure

7.1. Initial setup of the Dionex 4000i chromatograph.

7.1.1. Fill reagent reservoir bottle No. 1 with the cation eluant.

7.1.2. Fill the reservoir in the auto-regen system for the micromembrane suppressor with approximately 750 mL of the 0.1 M TBAOH solution. Settings on the system should be **20** for **STROKE RATIO** and **80** for **FREQUENCY**. It may be necessary to further adjust these settings to obtain a smooth baseline. Turn switch to **ON** and let equilibrate for 5 - 10 min.

7.1.3. Install the CS 3 cation column with the CG3 guard column in the basic chromatography module. Make sure that all fittings are snug and leak free.

7.1.4. Install the CMMS in the basic chromatography module with the correct regenerant and eluant lines and ensure that the fittings are snug.

7.1.5. Check that the He gas has been regulated at the main tank to deliver 100 psi.

7.1.6. Turn on the He gas to the eluant degas module to degas the reagent eluants. Turn the **PRESSURE** switch **ON** and pressurize to 20 psi. Turn the **SAMPLE** switch **ON**. Turn **ELUANT NO. 3** to **ON**. Degas in low mode.

7.1.7. Turn the gradient pump module (GPM) and the conductivity detector module (CDM) to **LOCAL**. Turn the **PUMP** switch to **START**. The program for this setup should be at 100% flow on position 3, at a flow rate of 1 mL/min. The **HIGH LIMIT** setting of the pump pressure should be at **4000 psi** and **LOW LIMIT** at **0**. The normal operating pressure of this system is 780 - 820 psi.

7.1.8. If the pump does not start, or if there is a grinding noise or low or erratic pump pressure, it may be necessary to prime the pump. Shut off the pump if this occurs.

7.1.8.1. Prime the pump by inserting a 10-cc plastic syringe at the priming point and open the valve. Draw eluant solution into

the syringe at the priming point, filling the syringe. Remove the syringe, invert, and tap to release trapped air bubbles.

7.1.8.2. Reinsert the syringe into the priming point. Open the pressure transducer valve. Turn on the pump. Inject the liquid in the syringe into the system until the syringe is nearly empty. Retighten the pressure transducer valve. Turn off the valve at the priming point.

7.1.8.3. The system should now be primed and the system pressure should stabilize. If the system doesn't stabilize, it may be necessary to prime again until all air is removed from the eluant lines.

7.1.9. Let the system equilibrate under these conditions for 15-30 min until a steady baseline of approximately 10 microsiemens is reached on the conductivity meter.

7.2. Sample preparation.

7.2.1. All unknowns should be filtered through a 0.45-μm filter to remove solids that clog columns and lines.

7.2.2. For Ca determinations on TA-50 final monthly composites (FMC), run at 1:100 dilution. Use the nonacid fraction of the sample for analysis. It may be necessary to adjust the dilutions because samples vary widely. If the level of analyte in the sample is uncertain, start with a 1:100 dilution and adjust accordingly. Try to adjust sample peaks to be no less than 25% of the standard peak.

7.2.3. For Ca determinations on TA-50 and DP-257 raw monthly composites (RMC), use a nonacid sample and dilute 1:5.

7.2.4. It may be possible to determine Mg in the above sample dilutions. If Mg is very low, it may be necessary to run the samples with no dilution. If further dilutions are necessary, try to adjust sample peaks to no less than 25% of the standard peak. It is best to run the samples through the column as dilute as possible to prevent overloading the columns with salts.

7.2.5. Prepare spiked samples to determine the efficiency of sample recovery. Add a measured aliquot of sample, 2 mL of the 1000-μg/mL Ca stock standard and 1 mL of the 1000-μg/mL Mg stock standard to a 100-mL volumetric flask. Dilute to volume with double-deionized water. The added Ca spike should equal 20 ppm. The added Mg spike should equal 10 ppm.

7.3. Overview of computer program setup.

7.3.1. While the system is equilibrating, set up the computer method and schedule to run the system. The system can be run fully automated for large numbers of samples or on semiautomatic for smaller batches. *This procedure is written for the automatic method.* The method can be stored in the computer and recalled as needed and modified as necessary. The schedule is usually redone every run to meet the required sample load.

7.4. Setup of the **METHOD.EXE** file.

7.4.1. Turn up the brightness and contrast on the computer screen. The system should be in the MS-DOS-DATA mode.

7.4.2. Select the **METHOD.EXE** file from the files that appear on the screen by double clicking the mouse.

7.4.3. Select either the **NEW** or **OPEN** option under the **FILE BOX**. If you set up a new file by selecting **NEW** you will have to assign a file name of choice at various steps in setting up your new method file. In our case, select the **OPEN** file since that file already exists. Select the **CATION2.MET** file.

NOTE: If a file already exists, it is not necessary to save the file. However, in this procedure we will go through the steps of the method and save the file to ensure familiarity with setup of the procedure.

7.4.4. Under the **SETTINGS** file select the **CIM/SYSTEM** option. The **CIMI** and **SYSTEM 1** boxes should be activated. Select the **OPEN** box. Go back to the **FILE BOX** and select the **SAVE** option to save the file.

7.4.5. Under the **SETTINGS** file select the **GRADIENT** box. The following conditions should be on file:

Hi Limit = 4000
Lo Limit = 0

Time	Flow	%1	%2	%3	%4	V5	V6
0.0	1 mL	0	0	100	0	0	0
0.1	1 mL	0	0	100	0	1	0
0.2	1 mL	0	0	100	0	0	0
26.0	1 mL	0	0	100	0	0	0

Go to the **FILE BOX** and **CLOSE** and **SAVE** the file.

7.4.6. Go back to the **SETTINGS** box and select the **CONTROL** option box. The following conditions should be on file:

Temp. Comp.		1.7
Range		30 μS
Initial Time	Relay 1	- Off
	ACI	- On
	Offset	- Off
	GPM Start	- On
	Reset	- Off
	Run	- Off
	Begin Sample	- Off
0.0 min	Relay 1	- On
	ACI	- Off
	Offset	- On
	GPM Start	- On
	Reset	- Off
	Run	- On
	Begin Sample	- Off
0.1 min	Relay 1	- On
	ACI	- On
	Offset	- On
	GPM Start	- On
	Reset	- Off
	Run	- On
	Begin Sample	- On
0.2 min	Relay 1	- On
	ACI	- On
	Offset	- On
	GPM Start	- On
	Run	- On
	Reset	- Off
	Begin Sample	- Off
20.0 min	Relay 1	- On
	ACI	- On
	Offset	- Off
	GPM Start	- On
	Run	- Off
	Reset	- On
	Begin Sample	- Off

Go to the **FILE BOX** and **CLOSE** and **SAVE** the file.

7.4.7. Go to the **SETTINGS** box and select the **REPORT** option. The following conditions should be used:

Run Time	- 20 min
Print Report	- On
Print Processed Plot	- On
List Peaks Not Found	- On
Print Retention Time	- On
Include Unknown Peaks	- On
File Name	- CAT 2
Select OK	

Go to **FILE BOX** and **CLOSE** and **SAVE** the file.

7.4.8. Go to the **SETTINGS** box and select **INTEGRATION**. Use the default settings except under **Ret. Time Wind**, where you type in **10.00**. Select **OK** and **SAVE** the file.

7.4.9. Go to **SETTINGS** and select **DETECTOR**. Use default settings. Select **OK** and **SAVE** the file.

7.4.10. Go to **SETTINGS** and select **CALIBRATION**. Use default parameters except under **Sample Units**, where you type in **ppm**. Select **OK** and **SAVE** the file.

7.4.11. Go to **SETTINGS** and select the **COMPONENT TABLE**. Use the following conditions to set up the table. However, after running a standard sample it might be necessary to go back into this file and reset retention times if they have shifted. Use the edit file to make corrections. Use the tab button to cycle through each component.

Component Name	Mg
Retention Time	8.80 min
Time Window	10%
Reference Peak	1
Concentration	5 ppm
Area	As is
Height	As is

Component Name	Ca
Retention Time	16.80 min
% Time Window	10%
Reference Peak	1

Concentration	20 ppm
Area	As is
Height	As is

Go to the **FILE BOX** and **CLOSE** and **SAVE** the file.

7.4.12. Go to **SETTINGS** and select **DATA EVENTS**. At 0.1 min select the option **START PEAK DETECTION**. Also select **FORCE BASELINE** at start of all peaks at 1.0 min. **CLOSE** and **SAVE** all the files.

7.4.13. Go back to the **FILE BOX** and select **PRINT**. Print the entire method and check to see that all selected parameters are entered correctly.

7.4.14. Select **CLOSE** in the **FILE BOX** to close out method and **SAVE** any current changes you have made. The **METHOD** file will now be in the **ICON** at the bottom of the screen.

7.5. Setup of **SCHEDULE.EXE** file.

7.5.1. Bring up the **ICON** from the bottom of the screen using the mouse pointer.

7.5.2. Select the file **SCHEDULE.EXE** by double clicking the mouse pointer.

7.5.3. Under **FILE** select **NEW** if creating a new file or **OPEN** if a file already exists. Assign a name to a new file. Under the **FILE BOX** click on **OPEN**. We will use the existing file **CATION 2**.

7.5.4. The format for the schedule will be displayed on the screen. A block of the format will be darkened one at a time. The darkened portion can be changed to fit your schedule by typing in new information up to 15 characters. After making an entry, tab to the next box. Use the edit option to insert or delete information. The following is a typical schedule. Always set **AUTOCAL 1** in the first sample name to calibrate the system.

#	SAMPLE NAME	METHOD	DATA FILE	VOL	DIL	INT STD
1	AUTOCAL 1	CATION 2	CAT 2	1	1	1
2	STD	CATION 2	CAT 2	1	1	1
3	QA00.01009	CATION 2	CAT 2	1	1	1
4	88.66035	CATION 2	CAT 2	1	1	1
5	88.66035-R	CATION 2	CAT 2	1	1	1
6	88.66035-S	CATION 2	CAT 2	1	1	1
7	STD	CATION 2	CAT 2	1	1	1

CLOSE and **SAVE** the file. **CLOSE** the **SCHEDULE** file. The file will now be located in the **ICON** at the bottom of screen.

7.6. Autosampler setup.

7.6.1. Load standards, QC samples, samples, duplicates, and spikes into the 5-mL sample vials. Duplicates, QC samples, and spikes should be run every tenth unknown sample.

7.6.2. Fill the tube with solution to the etched line or above. Use only filtered solutions for unknown samples. Insert the cap into the tube with the nipple end up. Press down on the cap with the special tool provided until the cap is flush with the vial. Shake off excess liquid.

7.6.3. Place the sample tubes into the 6-position cassette. Load in order with the first sample nearest the white dot on the cassette.

7.6.4. Load the sample cassettes into the autosampler with the white dot facing the sampling mechanism.

7.6.5. The autosampler should be in local mode. Put **RUN-HOLD** in the **RUN** mode and press the **LOAD** button. The cartridge will advance and run through the cycle. Let it run until the **STATUS** light shows **READY**. This process takes about 1 min.

7.6.6. Place the autosampler in remote mode. At this time the samples are loaded and ready to start an automated run under computer control.

7.7. Running samples in the Dionex.

7.7.1. Call up MS-DOS-EXECUTE by pulling up the **ICON** from the bottom of the screen.

7.7.2. Double click the mouse on the **RUN.EXE** file displayed on the screen.

7.7.3. Under the **LOAD** option select the **METHOD** box. Click on the method to be run, in this case the file **CATION 2.MET**. Select the **OPEN** box and click **OK**. The METHOD will be loaded into the CIM control. It will take a few seconds to load. Completion will be indicated on the screen.

7.7.4. Return to the **LOAD** option and select the **SCHEDULE** box. Select the schedule **CATION 2** that you have already set up and click on **OPEN** then **OK**. The computer is now loading the **SCHEDULE** to the CIM. This takes a few seconds and completion will be indicated on the screen.

7.7.5. The system should be equilibrated and ready to run under control of the computer. Make sure the sampler is in the remote mode. Also make sure that the conductivity meter and the gradient pump are in remote mode and the computer will take over control of the system.

7.7.6. Go to the **RUN** box and select **START**. Click on the **OK** box. It will take a few seconds to start the process. A graph of the sample being analyzed will appear on the screen. The sample will be readied for the sampling cycle. This process will be repeated until the schedule you have programmed has been completed. A hard copy of the chromatogram with results in ppm will be printed out after each sample has been analyzed.

7.8. Dionex shutdown.

7.8.1. Shut off the gas at the main cylinder.

7.8.2. Return the CDM and GPM to the **LOCAL** mode.

7.8.3. Stop the pump. The pressure should return to zero.

7.8.4. Shut off the He gas to the eluant degas module and shut off the degas module.

7.8.5. Turn **OFF** the auto-regen system.

7.8.6. Turn down the intensity on the screen.

8. Calculations

8.1. Sample values can be read in ppm directly from the printout. Make volume corrections as needed.

8.2. Calculate spike recovery using the following equation:

$$\% \text{ Recovery} = \frac{Ss - S}{C} \times 100 \quad ,$$

where Ss = spiked sample (ppm),
S = unspiked sample (ppm), and
C = amount of spike added (ppm).

9. Source Materials

9.1. *Dionex 4000i Manual*, Document No. 032926 (Dionex Corp., 1228 Titan Way, Sunnyvale, California 94088-3603, 1987).

HARDNESS OF WATER AND WASTE WATER—CALCULATION

Analyte: Calcium and magnesium	**Method No.:** WI428
Matrix: Water and waste water	**Range:** 1-2000 mg/L
Procedure: Calculation	**Detection Limit:** 0.1 mg/L
Effective Date: 11/04/91	**Author:** Harold P. Patterson

SAFETY NOTE: Before beginning this procedure, read Sec. 4.3 of the EM-9 Safety Manual for information on personal protective clothing and equipment.

1. Principle of Method

1.1. Calcium and magnesium are determined in solution by atomic absorbtion (AA), inductively coupled plasma mass spectrometry (ICPES), or ion chromatography (IC). Total hardness is the sum of the calcium and magnesium contributions both expressed as $CaCO_3$ in mg/L.

2. Accuracy and Precision

2.1. Determined by analytical method of choice.

3. Interferences

3.1. Determined by analytical method of choice.

4. Collection and Storage

4.1. Determined by analytical method of choice.

5. Calibration and Standards

5.1. Determined by analytical method of choice.

6. Calculation

6.1. The concentrations of calcium and magnesium in a sample are determined analytically and these concentrations are added together to determine hardness.

$$H = C + M \quad ,$$

where H = hardness of water as $CaCO_3$ (mg/L),
C = concentration of Ca in the sample (mg/L), and
M = concentration of Mg in the sample (mg/L).

6.2. Example.

Hardness as $CaCO_3$ mg/L = 2.497 mg Ca/L + 4.118 mg Mg/L

7. Source Materials

7.1. American Public Health Association, American Waterworks Association, and Water Pollution Control Federation, *Standard Methods for the Examination of Water and Waste Water*, 16th ed., Method 314 (American Public Health Association, Washington, DC, 1985), p. 209.7.

SODIUM AND POTASSIUM IN WATER AND WASTE WATER — IC

Analyte: Sodium and potassium	**Method No.:** WI430
Matrix: Water and waste water	**Range:** 1 - 1000 mg/L
Procedure: Ion chromatography (IC)	**Detection Limit:** 0.5 mg/L
	Accuracy and Precision: Na 110% ± 3% RSD K 105% ± 6% RSD
	Recovery: Na 104% ± 15% RSD K 97% ± 8% RSD
Effective Date: 02/09/88 to 06/16/92	**Author:** Harold P. Patterson

SAFETY NOTE: Before beginning this procedure, read all of the Material Safety Data Sheets for the chemicals listed in Sec. 5. Read Sec. 4.3 of the EM-9 Safety Manual for information on personal protective clothing and equipment.

1. Principle of Method

1.1. Ions in the mobile (aqueous) phase are separated by their affinity for the stationary (resin) phase. The affinity is a function of resin type, ion size, ion charge, ion concentration, and matrix composition of the mobile phase.

1.2. The guard column acts as a trap to prevent contamination of the separator column. The separation actually begins on the guard column.

1.3. The mobile phase then passes through a micromembrane suppressor which is washed with a regenerant to remove the high background of the column eluant.

1.4. A conductivity meter continuously measures the conductivity of the mobile phase after the suppressor.

1.5. Unknowns are compared with standards of known concentration as a function of retention time on the resin.

2. Accuracy and Precision

2.1. An Environmental Protection Agency quality control (QC) sample, no. 00.01013, with a Na concentration between 17.8 and 22.3 ppm and a K concentration between 4.17 and 5.71 ppm, was analyzed with prepared standards over a 6-month period. The accuracy and precision (percent recovery ± relative standard deviation [RSD]) for Na was 110% ± 3% and for K was 105% ± 6%.

3. Interferences

3.1. Sample ions must be in the same state as the standard. Complex ions will have different retention times than simple ions and may not elute from the column.

3.2. Samples with ionic strengths that differ significantly from the standards may have considerably different retention times than the standard.

3.3. High concentrations of one species in a sample may distort or swamp adjacent peaks.

4. Apparatus

4.1. Dionex 4000i chromatograph: Dionex Corp., 1228 Titan Way, Sunnyvale, California 94088-3603.

4.2. Dionex AI-400 data station: equipped with a mouse, Microsoft Windows, and AI-400 software. Dionex Corp., 1228 Titan Way, Sunnyvale, California 94088-3603.

4.3. Dionex Computer Interface Module (CIM): Dionex Corp., 1228 Titan Way, Sunnyvale, California 94088-3603.

4.4. Hewlett Packard Think-Jet printer: Holmans, 401 Wyoming Blvd., Albuquerque, New Mexico.

4.5. Autosampler: Dionex Corp., 1228 Titan Way, Sunnyvale, California 94088-3603.

4.6. FAST SEP cation separator column with CG3 guard column: Dionex Corp., 1228 Titan Way, Sunnyvale, California 94088-3603.

4.7. Volumetric flasks: class A, various sizes.

4.8. Pipettes: class A, various sizes.

4.9. Filtering apparatus: Millipore, with 0.45-μm filters. VWR Scientific, Los Alamos, New Mexico.

4.10. Filtering flask: 250-mL.

4.11. Auto-regen system for cation suppressor: Dionex Corp., 1228 Titan Way, Sunnyvale, California 94088-3603.

4.12. Glass bottles: 1-L, for delivery of column eluants. Dionex Corp., 1228 Titan Way, Sunnyvale, California 94088-3603.

4.13. Gas pressure regulator for He cylinder: VWR Scientific, Los Alamos, New Mexico.

4.14. Syringe: 10-cc, plastic, disposable.

4.15. Cation micromembrane suppressor (CMMS). Dionex Corp., 1228 Titan Way, Sunnyvale, California 94088-3603.

5. Reagents

5.1. Helium gas. Regulated to deliver 100 psi. Los Alamos National Laboratory Gas Plant.

5.2. Double-deionized water.

5.3. Sodium stock standard solution (1000 μg/mL). Spex Industries, 3880 Park Avenue, Edison, NJ 08820.

5.4. Potassium stock standard solution (1000 μg/mL). Spex Industries, 3880 Park Avenue, Edison, NJ 08820.

5.5. Sodium working standard solution (4 ppm). Pipette 4 mL of the 1000-μg/mL Na stock standard solution into a 1-L volumetric flask and dilute to volume with double-deionized water.

5.6. Potassium working standard solution (5 ppm). Pipette 5 mL of the 1000-μg/mL K stock standard solution into a 1-L volumetric flask and dilute to volume with double-deionized water.

5.7. Sodium spike solution (100 ppm). Add 100 mL of the 1000-μg/mL Na stock standard solution to a 1-L volumetric flask and dilute to volume with double-deionized water.

5.8. Potassium spike solution (100 ppm). Add 100 mL of the 1000-g/mL K stock standard solution to a 1-L volumetric flask and dilute to volume with double-deionized water.

5.9. Hydrochloric acid (1 N). Prepare from DILUT-IT standards as manufacturer directs. VWR Scientific, Los Alamos, New Mexico.

5.10. 2,3-Diaminopropionic acid monohydrochloride (DAP • HCl) (99%). Aldrich Chemical Co., VWR Scientific, Los Alamos, New Mexico.

5.11. DAP • HCl stock (3mM). Weigh out 0.422 g of 2,3-diaminopropionic acid monohyrochloride and transfer to a 1-L volumetric flask. Add approximately 500 mL of water and dissolve all the salts. Dilute to volume and mix well.

5.12. Cation eluant. Add 17 mL of 1 M HCl and 85 mL of 3mM DAP • HCl stock from Step 5.11 to a 1-L volumetric flask containing approximately 500 mL of water. Dilute to volume and mix well.

5.13. Tetrabutylammonium hydroxide (TBAOH) (0.1 M). Add 100 mL of 55% TBAOH to a 2-L volumetric flask. Dilute to volume with distilled water and mix well. Dionex Corp., 1228 Titan Way, Sunnyvale, California 94088-3603.

6. Calibration and Standards

6.1. Prepare the 4-ppm Na and 5-ppm K stock standards each month as described in Steps 5.5 and 5.6.

6.2. QC sample no. 00.01009 is used to check the accuracy of the method and instrumentation. The following ranges are acceptable: for Na, 17.8 to 22.3 mg/L; for K, 4.17 to 5.71 mg/L.

7. Procedure

7.1. Initial setup of the Dionex 4000i chromatograph.

7.1.1. Fill reagent reservoir bottle No. 1 with the cation eluant.

7.1.2. Fill the reservoir in the auto-regen system for the micromembrane suppressor with approximately 750 mL of the 0.1 M TBAOH solution. Settings on the system should be **20** for **STROKE RATIO** and **80** for **FREQUENCY**. It may be necessary to further adjust these settings to obtain a smooth baseline. Turn switch to **ON** and let equilibrate for 5 - 10 min.

7.1.3. Install the FAST SEP cation column with the CG3 guard in the basic chromatography module. Make sure that all fittings are snug and leak free.

7.1.4. Install the CMMS in the basic chromatography module with the correct regenerant and eluant lines and ensure that the fittings are snug.

7.1.5. Check that the He gas has been regulated at the main tank to deliver 100 psi.

7.1.6. Turn on the He gas to the eluant degas module to degas the reagent eluants. Turn the **PRESSURE** switch **ON** and pressurize to 20 psi. Turn the **SAMPLE** switch **ON**. Turn **ELUANT NO. 3** to **ON**. Degas in low mode.

7.1.7. Turn the gradient pump module (GPM) and the conductivity detector module (CDM) to **LOCAL**. Turn the **PUMP** switch to **START**. The program for this setup should be at 100% flow on position 3, at a flow rate of 1 mL/min. The **HIGH LIMIT** setting of the pump pressure should be at **4000 psi** and **LOW LIMIT** at **0**. The normal operating pressure of this system is 780 - 820 psi.

7.1.8. If the pump does not start, or if there is a grinding noise or low or erratic pump pressure, it may be necessary to prime the pump. Shut off the pump if this occurs.

7.1.8.1. Prime the pump by inserting a 10-cc plastic syringe at the priming point and open the valve. Draw eluant solution into the syringe at the priming point, filling the syringe. Remove the syringe, invert, and tap to release trapped air bubbles.

7.1.8.2. Reinsert the syringe into the priming point. Open the pressure transducer valve. Turn on the pump. Inject the liquid in the syringe into the system until the syringe is nearly empty. Retighten the pressure transducer valve. Turn off the valve at the priming point.

7.1.8.3. The system should now be primed and the system pressure should stabilize. If the system doesn't stabilize, it may be necessary to prime again until all air is removed from the eluant lines.

7.1.9. Let the system equilibrate under these conditions for 15-30 min until a steady baseline of approximately 10 microsiemens is reached on the conductivity meter.

7.2. Sample preparation.

7.2.1. All unknowns should be filtered through a 0.45-μm filter to remove solids that clog columns and lines.

7.2.2. Run all dilutions of samples at 1:100. Use the nonacid fraction of the sample for analysis. It may be necessary to adjust the dilutions. Try to adjust sample peaks to be no less than 25% of standard peak.

7.2.3. Prepare spiked samples to determine the efficiency of sample recovery. Add the sample aliquot, 4 mL of the 100-ppm Na spike solution and 5 mL of the 100-ppm K spike solution to a 100-mL volumetric flask. Dilute to volume with double-deionized water. Mix well. The Na spike under these conditions should be 4 ppm and the K spike should be 5 ppm.

7.3. Overview of computer program setup.

7.3.1. While the system is equilibrating, set up the computer method and schedule to run the system. The system can be run fully automated for large numbers of samples or set on semiautomatic for smaller batches. *This procedure is written for the automatic method.* The method can be stored in the computer and recalled as needed and modified as necessary. The schedule is usually redone every run to meet the required sample load.

7.4. Setup of the **METHOD.EXE** file.

7.4.1. Turn up the brightness and contrast on the computer screen. The system should be in the MS-DOS-DATA mode.

7.4.2. Select the **METHOD.EXE** file from the files that appear on the screen by double clicking the mouse.

7.4.3. Select either the **NEW** or **OPEN** option under the **FILE BOX**. If you set up a new file by selecting **NEW** you will have to assign a file name of choice at various steps in setting up your new method file. In our case, select the **OPEN** file since that file already exists. In this case it will be **CATION1.MET**. Double click on this method and then the **OPEN** box.

7.4.4. Under the **SETTINGS** file select the **CIM/SYSTEM** option. The **CIMI** and **SYSTEM 1** boxes should be activated. Select the **OPEN** box. Go back to the **FILE BOX** and select the **SAVE** option to save the file.

7.4.5. Under the **SETTINGS** file select the **GRADIENT** box. The following conditions should be on file:

Hi Limit = 4000
Lo Limit = 0

Time	Flow	%1	%2	%3	%4	V5	V6
0.0	1 mL	0	0	100	0	0	0
0.1	1 mL	0	0	100	0	1	0
0.2	1 mL	0	0	100	0	0	0
6.0	1 mL	0	0	100	0	0	0

Go to the **FILE BOX** and **CLOSE** and **SAVE** the file.

7.4.6. Go back to the **SETTINGS** box and select the **CONTROL** option box. The following conditions should be on file:

Temp. Comp.		1.7
Range		30 μS
Initial Time	Relay 1	- Off
	ACI	- On
	Offset	- Off
	GPM Start	- On
	Reset	- Off
	Run	- Off
	Begin Sample	- Off
0.0 min	Relay 1	- On
	ACI	- Off
	Offset	- On
	GPM Start	- On
	Reset	- Off
	Run	- On
	Begin Sample	- Off
0.1 min	Relay 1	- On
	ACI	- On
	Offset	- On
	GPM Start	- On
	Reset	- Off
	Run	- On
	Begin Sample	- On
0.2 min	Relay 1	- On
	ACI	- On
	Offset	- On
	GPM Start	- On
	Run	- On

	Reset	- Off
	Begin Sample	- Off
6.0 min	Relay 1	- On
	ACI	- On
	Offset	- Off
	GPM Start	- On
	Run	- Off
	Reset	- On
	Begin Sample	- Off

Go to the **FILE BOX** and **CLOSE** and **SAVE** the file.

7.4.7. Go to the **SETTINGS** box and select the **REPORT** option. The following conditions should be used:

Run Time	- 6.0 min
Print Report	- On
Print Processed Plot	- On
List Peaks Not Found	- On
Print Retention Time	- On
Include Unknown Peaks	- On
File Name	- CAT 1
Select OK	

Go to **FILE BOX** and **CLOSE** and **SAVE** the file.

7.4.8. Go to the **SETTINGS** box and select **INTEGRATION**. Use the default settings except under **Ret. Time Wind**, where you type in **10.00**. Select **OK** and **SAVE** the file.

7.4.9. Go to **SETTINGS** and select **DETECTOR**. Use default settings. Select **OK** and **SAVE** the file.

7.4.10. Go to **SETTINGS** and select **CALIBRATION**. Use default parameters except under **Sample Units**, where you type in **ppm**. Select **OK** and **SAVE** the file.

7.4.11. Go to **SETTINGS** and select the **COMPONENT TABLE**. Use the following conditions to set up the table. However, after running a standard sample it might be necessary to go back into this file and reset retention times if they have shifted. Use the edit file to make corrections. Use the tab button to cycle through each component.

Component Name	Na
Retention Time	2.80 min
Time Window	10%

Reference Peak	1
Concentration	4.0 ppm
Area	As is
Height	As is
Component Name	K
Retention Time	3.83 min
Time Window	10%
Reference Peak	1
Concentration	5 ppm
Area	As is
Height	As is

Go to the **FILE BOX** and **CLOSE** and **SAVE** the file.

7.4.12. Go to **SETTINGS** and select **DATA EVENTS**. At 0.1 min select the option **START PEAK DETECTION**. Also select **FORCE BASELINE** at start of all peaks at 1.0 min. **CLOSE** and **SAVE** all the files.

7.4.13. Go back to the **FILE BOX** and select **PRINT**. Print the entire method and check to see that all selected parameters are entered correctly.

7.4.14. Select **CLOSE** in the **FILE BOX** to close out method and **SAVE** any current changes you have made. The **METHOD** file will now be in the **ICON** at the bottom of the screen.

7.5. Setup of **SCHEDULE.EXE** file.

7.5.1. Bring up the **ICON** from the bottom of the screen using the mouse pointer.

7.5.2. Select the file **SCHEDULE.EXE** by double clicking the mouse pointer.

7.5.3. Under **FILE** select **NEW** if creating a new file or **OPEN** if a file already exists. Assign a name to a new file. Under the **FILE BOX** click on **OPEN**. We will use the existing file **CATION 2**.

7.5.4. The format for the schedule will be displayed on the screen. A block of the format will be darkened one at a time. The darkened portion can be changed to fit your schedule by typing in new information up to 15 characters. After making an entry, tab to the next box. Use the edit option to insert or delete information. The following is a typical schedule. Always set **AUTOCAL 1** in the first sample name to calibrate the system.

#	SAMPLE NAME	METHOD	DATA FILE	VOL	DIL	INT STD
1	AUTOCAL 1	CATION 1	CAT 1	1	1	1
2	STD	CATION 1	CAT 1	1	1	1
3	QA00.01009	CATION 1	CAT 1	1	1	1
4	88.66035	CATION 1	CAT 1	1	1	1
5	88.66035(R)	CATION 1	CAT 1	1	1	1
6	88.66035(S)	CATION 1	CAT 1	1	1	1
7	STD	CATION 1	CAT 1	1	1	1

CLOSE and **SAVE** the file. **CLOSE** the **SCHEDULE** file. The file will now be located in the **ICON** at the bottom of screen.

7.6. Autosampler setup.

7.6.1. Load standards, QC samples, samples, duplicates, and spikes into the 5-mL sample vials. Duplicates, QC samples, and spikes should be run every tenth unknown sample.

7.6.2. Fill the tube with solution to the etched line or above. Use only filtered solutions for unknown samples. Insert the cap into the tube with the nipple end up. Press down on the cap with the special tool provided until the cap is flush with the vial. Shake off excess liquid.

7.6.3. Place the sample tubes into the 6-position cassette. Load in order with the first sample nearest the white dot on the cassette.

7.6.4. Load the sample cassettes into the autosampler with the white dot facing the sampling mechanism.

7.6.5. The autosampler should be in local mode. Put **RUN-HOLD** in the **RUN** mode and press the **LOAD** button. The cartridge will advance and run through the cycle. Let it run until the **STATUS** light shows **READY**. This process takes about 1 min.

7.6.6. Place the autosampler in remote mode. At this time the samples are loaded and ready to start an automated run under computer control.

7.7. Running samples in the Dionex.

7.7.1. Call up MS-DOS-EXECUTE by pulling up the **ICON** from the bottom of the screen.

7.7.2. Double click the mouse on the **RUN.EXE** file displayed on the screen.

7.7.3. Under the **LOAD** option select the **METHOD** box. Click on the method to be run, in this case the file **CATION 2.MET**. Select the **OPEN** box and click **OK**. The METHOD will be loaded into the CIM control. It will take a few seconds to load. Completion will be indicated on the screen.

7.7.4. Return to the **LOAD** option and select the **SCHEDULE** box. Select the schedule **CATION 2** that you have already set up and click on **OPEN** then **OK**. The computer is now loading the **SCHEDULE** to the CIM. This takes a few seconds and completion will be indicated on the screen.

7.7.5. The system should be equilibrated and ready to run under control of the computer. Make sure the sampler is in the remote mode. Also make sure that the conductivity meter and the gradient pump are in remote mode and the computer will take over control of the system.

7.7.6. Go to the **RUN** box and select **START**. Click on the **OK** box. It will take a few seconds to start the process. A graph of the sample being analyzed will appear on the screen. The sample will be readied for the sampling cycle. This process will be repeated until the schedule you have programmed has been completed. A hard copy of the chromatogram with results in ppm will be printed out after each sample has been analyzed.

7.8. Dionex shutdown.

7.8.1. Shut off the gas at the main cylinder.

7.8.2. Return the CDM and GPM to the **LOCAL** mode.

7.8.3. Stop the pump. The pressure should return to zero.

7.8.4. Shut off the He gas to the eluant degas module and shut off the degas module.

7.8.5. Turn **OFF** the auto-regen system.

7.8.6. Turn down the intensity on the screen.

8. Calculations

8.1. Sample values can be read in ppm directly from the printout. Make volume corrections as needed.

8.2. Calculate spike recovery using the following equation:

$$\% \text{ Recovery} = \frac{Ss - S}{C} \times 100 \quad ,$$

where Ss = spiked sample (ppm),
S = unspiked sample (ppm), and
C = amount of spike added (ppm).

9. Source Materials

9.1. *Dionex 4000i Manual*, Document No. 032926 (Dionex Corporation, 1228 Titan Way, Sunnyvale, California 94088-3603, 1987).

SODIUM, POTASSIUM, CALCIUM, AND MAGNESIUM BY IC — ISOCRATIC DETERMINATION WITH IONPAC CS10 COLUMN

Analyte: Sodium, potassium, calcium, and magnesium	**Method No.:** WI435
Matrix: Water and waste water	**Range:** 1 - 1000 mg/L
Procedure: Ion chromatography (IC)	**Detection Limit:** 1 mg/L for Ca and Mg 0.5 mg/L for Na and K
Spike Recovery: Na 104% ± 15% RSD K 97% ± 8% RSD Ca 100% ± 9% RSD Mg 101% ± 13% RSD	**Accuracy and Precision:** Na 110% ± 3% RSD K 105% ± 6% RSD Ca 113% ± 4% RSD Mg 102% ± 5% RSD
Effective Date: 08/09/90	**Author:** Harold P. Patterson

SAFETY NOTE: Before beginning this procedure, read all of the Material Safety Data Sheets for the chemicals listed in Sec. 5. Read Sec. 4.3 of the EM-9 Safety Manual for information on personal protective clothing and equipment.

1. Principle of Method

1.1. Ions in the mobile (aqueous) phase are separated by their affinity for the stationary (resin) phase. The affinity is a function of resin type, ion size, ion charge, ion concentration, and matrix composition of the mobile phase.

1.2. The guard column acts as a trap to prevent contamination of the separator column. The separation actually begins on the guard column.

1.3. The mobile phase then passes through a micromembrane suppressor which is washed with a regenerant to remove the high background of the column eluant.

1.4. A conductivity meter continuously measures the conductivity of the mobile phase after the suppressor.

1.5. Unknowns are compared with standards of known concentration as a function of retention time on the resin.

2. Accuracy and Precision

2.1. An Environmental Protection Agency quality control (QC) sample, no. 00.01013, with a Na concentration between 17.8 and 22.3 ppm, a K concentration between 4.17 and 5.71 ppm, a Ca concentration between 17.5 and 22.2 ppm, and a Mg concentration between 4.18 and 5.62 ppm, was analyzed with prepared standards over a 6-month period. The accuracy and precision (percent recovery ± relative standard deviation [RSD]) for Na was 110% ± 3%, for K was 105% ± 6%, for Ca was 113% ± 4%, and for Mg was 102% ± 5%.

3. Interferences

3.1. Sample ions must be in the same state as the standard. Complex ions will have different retention times than simple ions and may not elute from the column.

3.2. Samples with ionic strengths that differ significantly from the standards may have considerably different retention times than the standard.

3.3. High concentrations of one species in a sample may distort or swamp adjacent peaks.

4. Apparatus

4.1. Dionex 4000i chromatograph: Dionex Corp., 1228 Titan Way, Sunnyvale, California 94088-3603.

4.2. Dionex AI-450 data station: equipped with a mouse, Microsoft Windows, and AI-450 Ver. 3.2 software. Dionex Corp., 1228 Titan Way, Sunnyvale, California 94088-3603.

4.3. Dionex Computer Interface Module (CIM): Dionex Corp., 1228 Titan Way, Sunnyvale, California 94088-3603.

4.4. Hewlett Packard Think-Jet printer: Holmans, 401 Wyoming Blvd., Albuquerque, New Mexico.

4.5. Autosampler: Dionex Corp., 1228 Titan Way, Sunnyvale, California 94088-3603.

4.6. IONPAC CS10 cation column with CG1 guard column: Dionex Corp., 1228 Titan Way, Sunnyvale, California 94088-3603.

4.7. Volumetric flasks: class A, various sizes.

4.8. Pipettes: class A, various sizes.

4.9 Filtering apparatus: Millipore, with 0.45-μm filter. VWR Scientific, Los Alamos, New Mexico.

4.10. Filtering flask: 250-mL.

4.11. Auto-regen system for cation suppressor: Dionex Corp., 1228 Titan Way, Sunnyvale, California 94088-3603.

4.12. Glass bottles: 1-L, for delivery of column eluants. Dionex Corp., 1228 Titan Way, Sunnyvale, California 94088-3603.

4.13. Gas pressure regulator for He cylinder: VWR Scientific, Los Alamos, New Mexico.

4.14. Syringe: 10-cc, plastic, disposable.

4.15. Cation micromembrane suppressor (CMMS). Dionex Corp., 1228 Titan Way, Sunnyvale, California 94088-3603.

5. Reagents

5.1. Helium gas. Regulated to deliver 100 psi. Los Alamos National Laboratory Gas Plant.

5.2. Double-deionized water.

5.3. Sodium, potassium, calcium, and magnesium stock standard solutions (1000 μg/mL). Spex Industries, 3800 Park Avenue, Edison, NJ 08820.

5.4. Hydrochloric acid (1 N). Prepare DILUT-IT standards as manufacturer directs. VWR Scientific, Los Alamos, New Mexico.

5.5. 2,3-Diaminopropionic acid monohydrochloride (DAP • HCl) (99%). Aldrich Chemical Co., VWR Scientific, Los Alamos, New Mexico.

5.6. Cation eluant. Add 1 L of water to a 2-L volumetric flask. Add 120 mL of 1 N HCl to the flask. Weigh out 1.68 g of DAP • HCl and add to the flask. Dissolve all salts. Dilute to volume and mix well.

5.7. Tetrabutylammonium hydroxide (TBAOH) (0.1 M). Dilute 100 mL of 55% TBAOH in a 2-L volumetric flask with distilled water. Dilute to volume and mix well. Dionex Corp., 1228 Titan Way, Sunnyvale, California 94088-3603.

5.8. Mixed working standard (5 ppm Na, K, and Mg and 10 ppm Ca). Add 5 mL of the 1000-μg/mL Na stock standard, 5 mL of the 1000-μg/mL K stock standard, 5 mL of the 1000-μg/mL Mg stock standard, and 10 mL of the

1000-μg/mL Ca stock standard to a 1-L volumetric flask. Dilute to volume with double-deionized water and mix well.

5.9. Sodium spike solution (100 ppm). Pipette 100 mL of the 1000-μg/mL Na stock standard solution into a 1-L volumetric flask and dilute to volume with double-deionized water.

5.10. Potassium spike solution (100 ppm). Pipette 100 mL of the 1000-μg/mL K stock standard solution into a 1-L volumetric flask and dilute to volume with double-deionized water.

6. Calibration and Standards

6.1. QC sample no. 00.01404 is used to check the accuracy of the method and instrumentation. The following ranges are acceptable: for Mg, 4.47 to 5.54 mg/L; for Ca, 18.1 to 22.1 mg/L; for Na, 18.3 to 21.6 mg/L; and for K, 4.33 to 5.65 mg/L.

7. Procedure

7.1. Initial setup of the Dionex 4000i chromatograph.

7.1.1. Fill reagent reservoir bottle No. 1 with the cation eluant.

7.1.2. Fill the reservoir in the auto-regen system for the micromembrane suppressor with approximately 750 mL of the 0.1 M TBAOH solution. Settings on the system should be **20** for **STROKE RATIO** and **80** for **FREQUENCY**. It may be necessary to further adjust these settings to obtain a smooth baseline. Turn switch to **ON** and let equilibrate for 5 - 10 min.

7.1.3. Install the IONPAC CS10 cation column with the IONPAC CG1 guard column in the basic chromatography module. Make sure that all fittings are snug and leak free.

7.1.4. Install the CMMS in the basic chromatography module with the correct regenerant and eluant lines and ensure that the fittings are snug.

7.1.5. Check that the He gas has been regulated at the main tank to deliver 100 psi.

7.1.6. Turn on the He gas to the eluant degas module to degas the reagent eluants. Turn the **PRESSURE** switch **ON** and pressurize to 20 psi. Turn the **SAMPLE** switch **ON**. Turn **ELUANT NO. 4** to **ON**. Degas in low mode.

7.1.7. Turn the gradient pump module (GPM) and the conductivity detector module (CDM) to **LOCAL**. Turn the **PUMP** switch to **START**. The program for this setup should be at 100% flow on position 4, at a flow rate of 1.2 mL/min. The **HIGH LIMIT** setting of the pump pressure should be at **4000 psi** and **LOW LIMIT** at **0**. The normal operating pressure of this system is 780 - 820 psi.

7.1.8. If the pump does not start, or if there is a grinding noise or low or erratic pump pressure, it may be necessary to prime the pump. Shut off the pump if this occurs.

7.1.8.1. Prime the pump by inserting a 10-cc plastic syringe at the priming point and open the valve. Draw eluant solution into the syringe at the priming point, filling the syringe. Remove the syringe, invert, and tap to release trapped air bubbles.

7.1.8.2. Reinsert the syringe into the priming point. Open the pressure transducer valve. Turn on the pump. Inject the liquid in the syringe into the system until the syringe is nearly empty. Retighten the pressure transducer valve. Turn off the valve at the priming point.

7.1.8.3. The system should now be primed and the system pressure should stabilize. If the system doesn't stabilize, it may be necessary to prime again until all air is removed from the eluant lines.

7.1.9. Let the system equilibrate under these conditions for 15-30 min until a steady baseline of approximately 10 microsiemens is reached on the conductivity meter.

7.2. Sample preparation.

7.2.1. All unknowns should be filtered through a 0.45-μm filter to remove solids that clog columns and lines.

7.2.2. For Ca determinations on filtered TA-50 final monthly composites (FMC), run at 1:100 dilution. Use the nonacid fraction of the sample for analysis. It may be necessary to adjust the dilutions because samples vary widely. If the level of analyte in the sample is uncertain, start with a 1:100 dilution and adjust accordingly. Adjust sample peaks to no less than ±50% of the standard peak. It may be necessary to make further dilutions after the first run to keep the samples within the working range.

7.2.3. For Ca determinations on TA-50 and DP-257 raw monthly composites (RMC), use a nonacid sample and dilute 1:5. **Always use filtered samples.**

7.2.4. It may be possible to determine Mg in the above sample dilution. If Mg is very low, it may be necessary to run the samples with no dilution. If further dilutions are necessary, try to adjust sample peaks to no less than ±50% of the standard peak. It is best to run the samples through the column as dilute as possible to prevent overloading the columns with salts.

7.2.5. Prepare spiked samples to determine the efficiency of sample recovery. Use a sample that is low in both Ca and Mg to avoid overloading the system. Add the sample aliquot, 2 mL of the 1000-μg/mL Ca stock standard, 1 mL of the 1000-μg/mL Mg stock standard, 4 mL of the 100-ppm Na spike solution, and 5 mL of the 100-ppm K spike solution to a 100-mL volumetric flask. Dilute to volume with double-deionized water and mix well. The spike concentration should equal 4 ppm for Na, 5 ppm for K, 20 ppm for Ca, and 10 ppm for Mg.

7.3. Autosampler setup.

7.3.1. Load standards, QC samples, samples, duplicates, and spikes into the 5-mL sample vials. Duplicates, QC samples, and spikes should be run every tenth unknown sample.

7.3.2. Fill the tube with solution to the etched line or above. Use only filtered solutions for unknown samples. Insert the cap into the tube with the nipple end up. Press down on the cap with the special tool provided until the cap is flush with the vial. Shake off excess liquid.

7.3.3. Place the sample tubes into the 6-position cassette. Load in order with the first sample nearest the white dot on the cassette. The first sample should always be the mixed working standard in order to calibrate the instrument.

7.3.4. Load the sample cassettes into the autosampler with the white dot facing the sampling mechanism.

7.3.5. The autosampler should be in local mode. Put **RUN-HOLD** in the **RUN** mode and press the **LOAD** button. The cartridge will advance and run through the cycle. Let it run until the **STATUS** light shows **READY**. This process takes about 1 min.

7.3.6. Leave the autosampler in local mode. At this time the samples are loaded and ready to start an automated run under computer control.

7.4. Setup of the operating files for running the instrument.

7.4.1. Turn up the brightness and contrast on the computer screen.

7.4.2. The first screen should be the **Program Manager**. Using the mouse, double click on the **AI-450 v3.2** block. The Main Menu Config. Screen will appear.

7.4.3. Double click on the **Method** block. The Method Editor screen will appear.

7.4.3.1. Click on the box called **file**. Move the cursor to **open** and click. Move the cursor to the **cation1.met** and double click.

7.4.3.2. Move the cursor and click on the **System** block. Under **System Assignment**, the first block reads **ACI SYS1: ANION1**. Click on **OK** to return to the Method Editor screen.

7.4.3.3. Go to the detectors used by this method and click on the **Detector 1** box. The highlighted box should read **CDM-1 Conductivity Det**. Click on the **OK** box and will return to the Method Editor screen.

7.4.3.4. The block marked **Plot Scale** is a variable parameter. It is set at 30.0 μS and should be left at this setting.

7.4.3.5. The **run time** box is variable but is normally set at 11.5 min. The **sampling rate** box should be set at 5 Hz.

7.4.3.6. Under **Instrument Control** double click on the **gradient**. The Gradient Editor screen will appear. Click on the **file** portion and click on **open**. Move the cursor to **cation1.gpm** and double click.

7.4.3.7. The corect instrument settings are tabulated below. Click on the **advance arrow** of the time box to display the three time settings: 0.0, 0.1, and 1.1 min. After checking these settings, click on the **OK** box.

Time (min)	Flow (mL/min)	Eluent Position 1	2	3	4	V5	V6
0.0	1.2	—	—	—	100%	off	off
0.1	1.2	—	—	—	100%	on	off
1.1	1.2	—	—	—	100%	off	off

7.4.3.8. Move the cursor to the uppermost left hand corner box and click. Select the **close** box and click. Save current changes by answering **yes**. Click on the **OK** box to save the file. Select **OK** again and you will return to the Method Editor screen.

7.4.4. Click on the **Timed Events** box and the Timed Event screen will appear.

7.4.4.1. Go to the **file** section and select **open**. Select the **cation1.te** file by double clicking. This will show the Timed Events Editor screen. Under the **file** box select the **open** option. Double click on the **cation1.te** option. Under the **step time** box, the inital conditions are GPM start, CDM-1 cell on, temp. comp. 1.7, and range 30 μS. Under the ACI setting, AC2 is activated.

7.4.4.2. The correct settings for each time step under the **step time** box are tabulated below. Click on each time step to verify these settings.

Time (min)	GPM start	GPM run	GPM reset	CDM-1 offset	CDM-1 cell	ACI Auto-sampler	ACI AC2	ACI Begin sampling
init. cond.	X	—	—	—	X	—	X	—
0.0	X	—	—	—	X	X	X	—
0.1	X	—	—	—	X	—	X	—
2.1	X	X	—	X	X	—	X	—
2.2	X	X	—	X	X	—	X	X
13.7	X	—	X	X	X	—	X	—

7.4.4.3. All the above settings are the normal settings for the cation procedure. They can be changed if necessary. When all selections are made, click on the **enter button** to enter the settings into the method file. Go to the **file** box at the uppermost left hand corner and select the **save** option. Select the **OK** box. Now all the settings are in the cation1 method file.

7.4.4.4. Go to the uppermost left hand corner of the Timed Events editor screen and select the **close** option. This will take you back to the AI-450 Method Editor screen.

7.4.5. Under the **Data Processing** box select **Detector 1**. Now the Data Processing parameters screen appears.

7.4.5.1. Click on the **integration** box. The peak detection parameters should appear as follows: peak width = 10 s, peak threshold = .035, area reject = 1000 area counts. Under reference peak, the area reject should be 1000 and the time window percent should be 10. The time window percent is the only setting that is likely to be changed after making initial selections. Click on the **OK** box.

7.4.5.2. Click on the **Data Events** box. There are various options which can be added or deleted as needed. The normal events selected are as follows: at 1.40 min void volume treatment for this peak and at 1.8 min start peak detection. Select **exit** and click. This takes you back to the Data Processing parameters screen.

7.4.5.3. Place the cursor on **Calibration** and click. You should be in the Calibration Parameters screen. The following options should be selected: levels = **1**, fit type = **linear**, calibration update = **replace**, standardization = **external**, peak calibration = **area**; defaults are as follows: sample volume = **1**, dilution factor = **1** (can be changed by clicking cursor and typing in value), unknown response factor = **0**, cal std volume = **1**, default internal standard std conc in samples = **1**, and sample units = **mg/L**. Click on **OK** to return to the Data Processing parameters screen.

7.4.5.4. Click on **Components**. The components of current interest are Na, K, Ca, and Mg. Normal retention times are as follows: Na = 1.82, K = 2.33, Mg = 4.9, and Ca = 8.78 min. If you must change these parameters due to varying column conditions, move the cursor to the appropriate box and double click.

7.4.5.5. Enter the new value at the keyboard. After a new value is typed in, click on the **add** box to enter the new value into the file. The percent window should be left at 10%. Ref. Comp. should be 2. This procedure is not currently being used to determine Li but the parameters could be set at this point for Li if desired. Click on the **exit** box. This will take you back to the Data Processing parameters screen.

7.4.5.6. Click on the **OK** box so that you are now back in the Method Editor screen. Go to the **file** box and select **save**. Click on **OK** to save the file. Go to the uppermost left hand corner of the screen and select **close**. This will take you back to the AI-450 Main Menu: Method screen.

7.4.6. Select the **Schedule** box by double clicking. By doing this you can now set up the schedule you will use to run your sample set.

7.4.6.1. Under the **file** box select **open**. Click on **cation1.sch**. Click on **OK** and the cation1 schedule screen should appear. In box #1 always type **AUTOCAL1** for the sample name. In AUTOCAL1 your known standard is run and the instrument is automatically calibrated. In box #2 type your QC number. The QC sample will verify that the instrument has been calibrated properly. Type in subsequent sample numbers. Check the run with a standard to ensure that the instrument has not drifted. Include 10% repeats and sample spikes. Under the method column, be sure to enter **anion1** for all entries. The vol and std columns should all have a value of 1. In the dilution column the appropriate dilution value can be entered.

7.4.6.2. When the schedule is complete go to the **file** box and select the **save** option. Click on **OK** to save. Go to the uppermost left hand box of the screen and **close** the file. You are now back in the AI-450 Main Menu: Schedule screen.

7.4.7. The instrument is now ready to be set up to run the samples. With the cursor, double click on the **run** box. The anion1 screen should appear.

7.4.7.1. Go to the box in the uppermost left hand corner and select **minimize**. The cation1 run screen now appears. Load a method and a schedule into the computer before you begin the actual run. Select and click on the **load** box. Select the **cation1** method and click. Click on the **OK** box. Click on the **OK** box again. The method selected will now be loaded on the computer and can be verified by the successive blinking lights at the gradient pump board. When the lights stop blinking the schedule can be loaded into the computer.

Go back to the **load** option and now select **schedule**. Select **cation1.sch** and click on **OK**. Click on **OK** again. The lights will blink again at the gradient pump board. When the lights stop blinking you are ready to run the samples.

7.4.7.2. Go back to the program board on the gradient pump. Place the local/remote switch in the **remote** mode. This will permit the computer to automatically take over the system in the subsequent step.

7.4.7.3. Go to the **run** box and select the **start** option. Click on **OK**. The sample changer will now be activated and the sample schedule will run to completion. Sample results will be printed out in mg/L. When the sample run is completed go to the uppermost left hand corner of the screen and select **close**. Click on **OK**. This will return you to the AI-450 Main Menu: Run screen.

7.5. Dionex shutdown.

7.5.1. Shut off the gas at the main cylinder.

7.5.2. Return the CDM and GPM to the **LOCAL** mode.

7.5.3. Stop the pump. The pressure should return to zero.

7.5.4. Shut off the He gas to the eluant degas module and shut off the degas module.

7.5.5. Turn **OFF** the auto-regen system.

7.5.6. Turn down the intensity on the screen.

8. Calculations

8.1. Sample values can be read in mg/L directly from the printout. Make volume corrections as needed.

8.2. Calculate spike recovery using the following equation:

$$\% \text{ Recovery} = \frac{Ss - S}{C} \times 100 \quad ,$$

where Ss = spiked sample (mg/L),
S = unspiked sample (mg/L), and
C = amount of spike added (mg/L).

9. Source Materials

9.1. *Dionex 4000i Manual*, Document No. 032926 (Dionex Corp., 1228 Titan Way, Sunnyvale, CA 94088-3603, 1987).

CONDUCTIVITY

Analyte: Total ions in solution	**Method No.:** WI450
Matrix: Water and waste water	
Procedure: Specific conductance is measured by a temperature-compensated conductivity meter	**Accuracy and Precision:** 98% ± 5% RSD
Effective Date: 05/01/86	**Author:** Harold P. Patterson

SAFETY NOTE: Before beginning this procedure, read all of the Material Safety Data Sheets for the chemicals listed in Sec. 6. Read Sec. 4.3 of the EM-9 Safety Manual for information on personal protective clothing and equipment.

1. Principle of Method

1.1. The specific conductance of solutions is measured in μmhos/cm by use of a Wheatstone-bridge temperature-compensated conductivity meter.

2. Accuracy and Precision

2.1. The determination of conductivity in 139 in-house quality control samples (303 ± 30 μmhos/cm) over a period of 10 months had a mean of 296 μmhos/cm and a relative standard deviation (RSD) of 5%.

3. Collection and Storage of Samples

3.1. Complete analysis within 24 hours. Store at 4°C.

4. Interferences

4.1. Use a temperature compensator to reduce error in conductivity measurements caused by differences in temperature.

5. Apparatus

5.1. Conductivity bridge: Beckman-Altex Model RC-20, Beckman Instruments, Inc., Cedar Grove, New Jersey.

5.2. Conductivity cell: dipping type with cell constant near 1.00.

5.3. Temperature compensation probe: Model AT/C-270.

5.4. Volumetric flask: 1-L.

5.5. Battery charger: For Ni-Cd batteries. Beckman Instruments, Inc., Cedar Grove, New Jersey.

6. Reagents

6.1. Potassium chloride (National Bureau of Standards [NBS], reagent-grade).

6.2. Potassium dihydrogen phosphate (NBS standard). Dry KH_2PO_4 in a desiccator. Weigh out 54.436 g and transfer to a 1-L volumetric flask. Add 180.2 mL of 1 N NaOH and dilute to volume with distilled water.

7. Standards and Calibration

7.1. Potassium chloride (0.01 M). Dissolve 0.7456 g of NBS KCl (predried for 2 h at 105°C and desiccator-cooled) in distilled water and dilute to 1 L at 25°C.

7.2. Calibration of conductivity cell for cell constant.

7.2.1. The specific conductance of KCl is well known at various temperatures. For this reason, use 0.01 M KCl to calibrate the conductivity cell. The resistance at 25°C of the 0.01 M KCl solution is read directly from the meter.

7.2.2. **EXAMPLE.** The conductivity of the distilled water used was 5 μmhos/cm at 25°C. The conductivity of the 0.01 M KCl is 1409 μmhos/cm at 25°C. Rinse the conductivity cell twice with the 0.01 M KCl solution. Take a reading of the 0.01 M KCl solution in ohms (R = 743 ohms). The cell constant K is equal to the product of the measured resistance in ohms and the specific conductance in $ohms^{-1}$ cm^{-1} or mhos/cm.

$$K = [(1409 + 5) \times 10^{-6}\ ohms^{-1}\ cm^{-1}]\ [743\ ohms] = 1.05\ cm^{-1}.$$

7.3. Quality control standard.

7.3.1. Dilute 5 mL of the solution prepared in Step 6.2 to 1 L with distilled water.

7.3.2. The conductivity of this solution is 303 μmhos/cm.

8. Procedure

8.1. Disconnect the charger when taking readings. Hold the **BAT CHECK** switch and observe reading. Readings to the right of the **BAT** line mean that the batteries are okay. Readings to the left mean that the batteries should be recharged or replaced.

8.2. Turn the **ON** switch to **ON**. The instrument will stay on for 5 min and will then shut off automatically.

8.3. The frequency selector switch has two settings, 85 Hz or 1 kHz. Use the lower frequency when the measured resistance is high, and the higher frequency when the measured resistance is low. The transition point is approximately 1000 ohms.

8.4. Place the **MODE** switch in the **COND/REC** position.

8.5. Use the **AUTO 1** position on the **TEMP COMP** switch when reading the conductivity of bases or salts like sodium chloride. Use the **AUTO 2** position when reading acidic solutions.

8.6. Leave the **CAP COARSE** and **CAP FINE** switches set at zero.

8.7. Always be sure the **NULL METER** is in the **0** position when making a final measurement. This means that the measuring bridge is balanced.

8.8. Rinse the temperature compensator and the conductivity cell thoroughly with distilled water and place them in the solution to be read. Move the conductivity cell up and down several times in the solution to release any bubbles that may have formed inside the casing. Immerse the conductivity cell in the solution to at least 1/2 in. above the vent hole and 1/2 in. above the bottom of the container.

8.9. Use the **COND MULT** switch and the **BALANCE** knob to bring the **NULL METER** to zero. Note the reading in μmhos and multiply it by the factor on the **COND MULT** dial and by the cell constant factor to obtain the conductivity of the solution.

8.10. Check a quality control sample for conductivity before running unknowns as outlined in Steps 8.2 through 8.9. The value should be 273 - 333 μmhos/cm.

8.11. Include 10% duplicates and 10% quality control samples with each run.

9. Source Materials

9.1. *Beckman Altex Instruction Manual for RC-20 Conductivity Bridge* (Beckman Instruments, Inc., Cedar Grove, New Jersey, 1982), pp. 1 and 20.

9.2. American Public Health Association, American Waterworks Association, and Water Pollution Control Federation, *Standard Methods for the Examination of Water and Wastewater*, 16th ed., Method 205 (American Public Health Association, Washington, DC, 1985), p. 31, Solution B.

9.3. Environmental Monitoring and Support Laboratory, *Methods for Chemical Analysis of Water and Waste*, Method 120.1 (Office of Research and Development, US Environmental Protection Agency, Cincinnati, Ohio, 1983).

Revisions or additions to the procedure are marked (▒▒▒). Where a section heading is marked, the entire section has been revised.

FLUORIDE IN WATER AND WASTE WATER

Analyte: Fluoride	**Method No.:** WI460
Matrix: Water and waste water	**Range:** 0.1 - 1000 mg/L
Procedure: Ion-selective electrode specific for fluoride	**Detection Limit:** 0.20 mg/L
	Accuracy and Precision: 101% ± 3% RSD
Effective Date: 01/03/84	**Author:** Mary Carol Williams

SAFETY NOTE: Before beginning this procedure, read all of the Material Safety Data Sheets for the chemicals listed in Sec. 6. Read Sec. 4.3 of the EM-9 Safety Manual for information on personal protective clothing and equipment.

1. Principle of Method

1.1. A buffer is added to both standards and samples to adjust ionic strength to a uniformly high value and to complex interfering metals.

1.2. The ion-selective electrode reads in millivolts, proportional to fluoride concentration.

2. Accuracy and Precision

2.1. The determination of fluoride in 19 Environmental Protection Agency (EPA) WS378/13 (1.36 ± 0.05 mg/L) reference samples over a period of 12 months had a mean of 1.35 mg/L and a relative standard deviation (RSD) of 3%.

2.2. Fourteen samples spiked with 0.03 mg/L of F^- over a period of 12 months resulted in an average recovery of 98% and an RSD of 8%. The percent recovery ranged from 83% to 107%.

3. Interferences

3.1. At high pH, hydroxide interferes with electrode response when [OH] >0.1 [F^-].

3.2. At pH <5 the hydrogen ion complexes the fluoride ion.

3.3. Polyvalent metal ions such as Fe III, Al III, and Si IV complex the fluoride ions.

4. Collection and Storage of Samples

4.1. Collect samples in polyethylene bottles. No additional preservation is necessary.

4.2. Complete analysis within 28 days.

5. Apparatus

5.1. pH meter: Beckman, Model pHI 70, VWR Scientific, Los Alamos, New Mexico.

5.2. Reference electrode: Orion No. 531540, VWR Scientific, Los Alamos, New Mexico.

5.3. Fluoride ion-selective electrode: Orion, No. 94-09, VWR Scientific, Los Alamos, New Mexico.

5.4. Volumetric pipettes: class A, various sizes.

5.5. Volumetric flasks: class A, 100-mL and 1000-mL.

5.6. Magnetic stirrer.

5.7. Stirring bars.

6. Reagents

6.1. Sodium fluoride (reagent-grade). Baker Chemical Co., VWR Scientific, Los Alamos, New Mexico.

6.2. Sodium hydroxide (5 N). Dissolve 200 g of NaOH in distilled water. Cool and dilute to 1 L.

6.3. Fluoride stock standard A (100 mg/L). Dissolve 0.221 g of anhydrous sodium fluoride (NaF) in distilled water and dilute to 1 L or dilute 10.0 mL of Banco 1000-mg F^-/L standard to 100 mL with distilled water. Store in a chemical-resistant polyethylene bottle.

6.4. Total ionic strength adjustment buffer (TISAB). Add 57 mL of glacial acetic acid, 58 g of NaCl, and 2.0 g of 1,2-cyclohexylenediaminetetraacetic acid (CDTA) to 500 mL of distilled water in a 1-L beaker. Stir to partially dissolve. Place the beaker in a cool water bath and slowly add approximately 150 mL of 5 N NaOH to reach a pH between 5.0 and 5.5. Dilute to 1 L in a volumetric flask.

7. Calibration and Standards

7.1. Fluoride stock standard B (10 mg/L). Dilute 10 mL of fluoride stock standard A to 100 mL with distilled water. Prepare fresh daily.

7.2. Working solutions. Add the following volumes of stock standard B to 100-mL volumetric flasks and dilute to volume.

Stock Standard B (mL)	Fluoride (mg/L)
0.0	0.00
1.0	0.10
2.0	0.20
4.0	0.40
6.0	0.60
10.0	1.00
15.0	1.50
20.0	2.00

7.3. Add 50 mL TISAB and dilute to volume with distilled H_2O.

8. Procedure

8.1. Pipette the sample into a 100-mL flask. Use 2 mL for the raw monthly composites (1:50 dilution) and 10 mL for the final monthly composites, natural waters, and drinking waters (1:10 dilution). Up to 50-mL samples may be used.

8.2. Spike 10% of the regular samples with 3 mL of stock standard B. Spike any new or unusual matrices to rule out the possibility of interferences.

8.3. Add 50 mL of TISAB to each flask. Dilute to volume and mix well.

8.4. Attach the fluoride and reference electrodes to the Beckman pH meter.

8.5. Pour standards and samples into 150-mL beakers. Stir well using a magnetic stirring bar.

8.6. With constant stirring and after the reading has stabilized, read the blank, each standard, and each sample twice by pressing the **ABS MV** switch. Low concentrations may require as long as 5 min to stabilize. Rinse probes between readings with distilled water and wipe dry. Record millivolt readings in a Laboratory notebook.

8.7. Include 10% duplicates, 10% spikes, and 10% quality control samples with each run.

9. Calculations

9.1. Plot the fluoride concentration of the standard (mg/L) vs millivolts on semilog graph paper. Using the millivolt reading of each sample, read the corresponding fluoride concentration from the standard curve. Multiply the result by the dilution factor if the sample was diluted.

9.2. Results may be calculated from millivolt readings using the least squares (LSQ) program on the VAX.

9.3. Spike recovery of F^- should be 0.3 mg/L ± 0.006 (allowable) or ± 0.003 (desirable).

$$R = Cs - C \quad ,$$

where R = amount recovered (mg/L),
Cs = concentration of spiked sample (mg/L), and
C = concentration of unspiked sample (mg/L).

9.4. Percent recovery should be between 85% and 115%.

$$\%R = \frac{R \times 100}{A} \quad ,$$

where %R = percent recovery,
R = amount recovered (mg/L), and
A = amount added (mg/L).

10. Source Materials

10.1. American Public Health Association, American Waterworks Association, and Water Pollution Control Federation, *Standard Methods for the Examination of Water and Wastewater*, 16th ed., Method 413B (American Public Health Association, Washington, DC, 1985).

10.2. Environmental Monitoring and Support Laboratory, *Methods for Chemical Analysis of Water and Waste*, Method 340.2 (Office of Research and Development, US Environmental Protection Agency, Cincinnati, Ohio, 1983).

Revisions or additions to the procedure are marked (▒▒▒▒). Where a section heading is marked, the entire section has been revised.

PH OF ORGANIC WASTE MATERIALS

Analyte: pH	**Method No.:** WI468
Matrix: Organic waste chemicals	**Precision:** ± 1 pH unit
Procedure: Colorimetric change of pH indicator paper	
Effective Date: 01/28/87	**Author:** Mary Carol Williams

SAFETY NOTE: Before beginning this procedure, read all of the Material Safety Data Sheets for the chemicals listed in Sec. 6. Read Sec. 4.3 of the EM-9 Safety Manual for information on personal protective clothing and equipment.

1. Principle of Method

1.1. Organic solution is mixed with distilled deionized water in a separatory funnel and shaken vigorously. The free hydronium or hydroxyl ions are extracted into the aqueous phase and measured with pH paper.

2. Accuracy and Precision

2.1. There is no reference material available to measure the accuracy of this procedure.

2.2. Five pH measurements of an organic waste sample had a mean of 3.5 and a relative standard deviation (RSD) of 0%.

2.3. The sensitivity of pH indicator paper is ± 0.5 pH units.

3. Interferences

3.1. Highly colored samples may interfere with the interpretation of the color of the pH paper.

4. Collection and Storage of Samples

4.1. Samples are collected in acid-washed bottles and stored in a refrigerator.

4.2. Analysis for pH should be completed immediately after collection.

CAUTION: These samples may be determined to be hazardous Resource Conservation and Recovery Act (RCRA) waste. The analyst must wear a lab coat, safety glasses, and gloves.

5. Apparatus

5.1. Separatory funnel: 100-mL, Teflon. VWR Scientific, Los Alamos, New Mexico.

5.2. Pan-pH or similar indicator strips: 0.1 - 14 pH range. VWR Scientific, Los Alamos, New Mexico.

6. Reagents

6.1. Distilled deionized water (DDW), pH 7.

6.2. Hydrochloric acid (6 N). Carefully add 50 mL of concentrated HCl to 50 mL of DDW.

6.3. Sodium hydroxide (6 N). Slowly and carefully, with cooling, add 24 g of NaOH pellets to 100 mL of DDW in a 100-mL volumetric flask.

CAUTION: Solution becomes very hot. Cool the flask in a beaker of cold water or under running cold water between additions of NaOH.

7. Procedure

7.1. It is important that all glassware and separatory funnels be clean and dry so that no contaminant is present to affect the pH of the test material.

7.2. Adjust the pH of the DDW to pH 7 by adding HCl or NaOH. Add 50 mL of test solution and 15 mL of pH 7 DDW to a 100-mL separatory funnel and cap. Shake vigorously for 30 s.

CAUTION: During shaking, periodically vent the funnel by inverting the funnel and opening the stopcock while the bottom of the funnel is pointing away from the operator.

7.3. Allow the phases to separate for 15 min. If separation is not complete, drain approximately 10 mL of the aqueous phase into a clean and dry polyethylene centrifuge tube and cap the tube. Centrifuge at 1500 rpm for 10 min.

7.4. Place a drop of the aqueous phase on the pH paper and record the result in the "Ash and pH" Laboratory notebook. Results should be reported as observed pH ± 1 pH unit.

8. Source Material

8.1. *ASTM Methods Manual*, "Standard Test Methods for Acidity of Distillation Residues or Hydrocarbon Liquids," ASTM Method D1093 (American Society of Testing Materials, 1980).

PH OF WATER AND WASTE WATER

Analyte: pH in solution	**Method No.:** WI470
Matrix: Water and waste water	**Detection Limit:** ± 0.1 pH units at pH 2 to 10
Procedure: Potentiometry	**Accuracy and Precision:** 99.7% ± 0.6% RSD
Effective Date: 05/01/86	**Author:** Harold P. Patterson

SAFETY NOTE: Before beginning this procedure, read all of the Material Safety Data Sheets for the chemicals listed in Sec. 6. Read Sec. 4.3 of the EM-9 Safety Manual for information on personal protective clothing and equipment.

1. Principle of Method

1.1. The pH of a sample is determined electrometrically with a pH electrode combined with a temperature compensating probe and pH meter.

2. Accuracy

2.1. The determination of pH in 30 in-house quality control samples (6.87 ± 0.06 pH units) over a 3-month period had a mean of 6.85 ± 0.06 at the 1σ level.

3. Interference

3.1. Sample solutions that differ greatly in temperature from the conditions used to calibrate the pH meter can adversely affect the sample reading. The automatic temperature compensator reduces this problem except on days when the laboratory temperature is below 18°C.

4. Collection and Storage of Samples

4.1. Analyze samples immediately.

4.2. Fill sample bottles to the top to prevent a change in pH because of the presence of air.

5. Apparatus

5.1. pH meter: Beckman, Model pHI 71, VWR Scientific, Los Alamos, New Mexico.

5.2. Beakers: 50-mL, glass or plastic.

5.3. Magnetic stirrer: VWR Model 200, VWR Scientific, Los Alamos, New Mexico.

5.4. Stirring bars.

5.5. pH electrode: Orion combination 91-05, VWR Scientific, Los Alamos, New Mexico.

5.6. Temperature compensator probe: Beckman No. 592373, VWR Scientific, Los Alamos, New Mexico.

5.7. Kimwipes: VWR Scientific, Los Alamos, New Mexico.

6. Reagents

6.1. Buffer solutions (pH 4, 7, and 10). VWR Scientific, Los Alamos, New Mexico.

6.2. Sodium hydroxide (1 N). Prepare DILUTE-IT solution according to product instructions.

6.3. Quality control (QC) sample concentrate (National Institute of Standards and Technology potassium dihydrogen phosphate). Dry KH_2PO_4 in a desiccator. Weigh out 54.436 g of KH_2PO_4 and transfer to a 1-L volumetric flask. Add 180.2 mL of 1 N NaOH and dilute to volume with distilled water.

7. Standards and Calibration

7.1. Calibrate the pH meter with standard pH buffers 4 and 7 or 7 and 10 depending on the expected pH range of the sample. Recalibrate after 4 h or after ambient temperature changes greater than 10°F.

7.2. Standardization of pH meter.

7.2.1. Pour 40 mL of pH 7 buffer into a 50-mL beaker. Add a stirring bar. Rinse the electrode with water and wipe with a Kimwipe. Immerse the electrodes well below the surface of the solution and turn on the magnetic stirrer.

7.2.2. Clear the memory of the pH meter by pressing the **CLR** button. Be sure **ATC** and **AUTO** mode are activated.

7.2.3. Press the button corresponding to the first point of the two-point calibration curve. Let the instrument cycle until **AUTO** stops blinking on the instrument display and a prompt arrow appears. The value should be 7.00 ± 0.1.

7.2.4. Remove the electrodes and rinse with distilled water. Wipe off excess water with a Kimwipe. Do this between all readings.

7.2.5. Pour 40 mL of the second pH buffer of choice into a beaker and add a stirring bar. Turn on the stirring motor. Immerse electrodes well below the surface of the solution.

7.2.6. Press the second button of the two-point calibration curve. Let the instrument cycle as before. The pH value obtained should be within ± 0.1 pH units of the certified value. The instrument is now calibrated.

7.3. Check the quality control standard.

7.3.1. Dilute 5 mL of the QC sample concentrate prepared in Step 6.3 to 1 L with distilled water. This should be labeled QC 00.00966 (working standard).

7.3.2. Determine the pH of the working standard by pouring 20 mL of the solution into a 50-mL beaker with stirring bar. Adjust the stirring action to a low speed on a magnetic stirrer. Insert the electrodes well below the surface of the solution and press the pH button on the meter. Allow the instrument to cycle before the final pH value appears on the meter. The pH of this solution should be in the range of 6.81 - 6.93. Restandardize the pH meter with the buffer solutions if the pH of the QC solution is out of range and then read the pH of the QC again. Repeat until the QC is in range before reading sample solutions.

8. Procedure

8.1. Read the unknown samples after the instrument has been standardized.

8.1.1. Pour approximately 20 mL of sample into a 50-mL beaker.

8.1.2. Add a stirring bar and adjust the stirring action to slow on a magnetic stirrer.

8.1.3. Insert the electrodes well below the surface of the solution and press the pH button on the meter. Allow the instrument to cycle before the final pH value appears on the meter.

8.1.4. Record the final pH value and uncertainty in the pH Laboratory notebook. The uncertainty range is posted at the pH meter.

8.2. Include 10% duplicates and 10% quality control samples in each sample run.

9. Electrode Storage and Maintenance

9.1. Storage

9.1.1. Rinse the electrode well with distilled water and wipe dry with a Kimwipe. Cover the electrode with the black rubber cap that is provided with the electrode. Store the electrode with the cap in place until next use.

9.2. Maintenance

9.2.1. Each week inspect the electrode for scratches, cracks, salt build-up, or membrane/junction deposits. Rinse off all deposits.

9.2.2. When the pH of QC 00.00966 can no longer be obtained in the expected range, replace the electrode. Standardize the new electrode and check to ensure that the QC falls within the expected range. Record the installation of the new electrode in the maintenance section of the pH Laboratory notebook.

10. Source Materials

10.1. American Public Health Association, American Water Works Association, and Water Pollution Control Federation, *Standard Methods for the Examination of Water and Wastewater*, 16th ed., Method 423 (American Public Health Association, Washington, DC, 1985).

10.2. Environmental Monitoring and Support Laboratory, *Methods for Chemical Analysis of Water and Waste*, Method 150.1 (Office of Research and Development, US Environmental Protection Agency, Cincinnati, Ohio, 1983).

Revisions or additions to the procedure are marked (). Where a section heading is marked, the entire section has been revised.

RESIDUAL CHLORINE IN WATER — AMPEROMETRIC TITRATION

Analyte: Residual total chlorine and free chlorine	**Method No.:** WI480
Matrix: Water	**Detection Limit:** 0.05 mg/L
Procedure: Amperometric titration	**Accuracy and Precision:** 95% ± 6% (mean ± 1 sigma at the 1-mg/L level)
Effective Date: 09/24/85	**Author:** Terry D. Filer

SAFETY NOTE: Before beginning this procedure, read all of the Material Safety Data Sheets for the chemicals listed in Sec. 7. Read Sec. 4.3 of the EM-9 Safety Manual for information on personal protective clothing and equipment.

1. Principle of Method

1.1. The amperometric titration method is a special adaptation of the polarographic principle.

1.2. Free available chlorine is titrated at a pH between 6.5 and 7.5, a range in which the combined chlorine reacts slowly.

1.3. Combined chlorine is titrated in the presence of potassium iodide in the pH range 3.5 to 4.5.

2. Sensitivity

2.1. For routine measurements of a 200-mL sample, the minimum detection limit is 0.01 mg.

3. Accuracy and Precision

3.1. Average recovery of a residual chlorine spike is 95% ± 6% at 1 mg/L.

4. Interferences

4.1. Accurate determination of free chlorine cannot be made in the presence of nitrogen trichloride or chlorine dioxide because they titrate partly as free chlorine.

4.2. Free halogens other than chlorine titrate as free chlorine.

5. Collection and Storage of Samples

5.1. Begin the chlorine determination immediately after sampling. Avoid excessive light and agitation.

5.2. Do not store samples that are to be analyzed for chlorine.

5.3. Analysis must be completed immediately.

6. Apparatus

6.1. Amperometric titrator: Fisher and Porter, Series 17T 2000, Warminster, PA.

6.2. Beakers: 250-mL.

6.3. Cotton swabs: double-tipped.

6.4. Eyedroppers.

6.5. Burette: 25-mL.

7. Reagents

7.1. Standard phenylarsine oxide titrant (0.00564 N). Fisher & Porter, part number 141B106U01.

7.2. Potassium iodide solution (5%). Fisher & Porter, part number 141B109U01.

7.3. Buffer solution (pH 4). Fisher & Porter, part number 141B109U02.

7.4. Buffer solution (pH 7). Fisher & Porter, part number 141B109U03.

7.5. Standard chlorine solution. Dilute 20 mL of household hypochlorite solution to 1 L.

7.6. Sodium thiosulfate (0.1 N). Baker analyzed reagent. Each lot is standardized at 25°C against National Bureau of Standards (NBS) Standard Reference Material $K_2Cr_2O_7$.

7.7. Standard sodium thiosulfate titrant (0.025 N). Dilute 250 mL of 0.100 N $Na_2S_2O_3$ to 1 L with freshly boiled distilled water. Add 4 g of sodium borate and 10 mg of mercuric iodide. Standardize this solution before each use with 0.025 N $K_2Cr_2O_7$.

7.8. Potassium dichromate (NBS primary standard).

7.9. Standard potassium dichromate (0.1000 N). Dissolve 4.904 g of primary standard quality anhydrous $K_2Cr_2O_7$ in distilled water and dilute to 1 L. Store in a glass-stoppered bottle.

7.10. Standard potassium dichromate (0.0250 N). Dilute 250 mL of 0.1000 N $K_2Cr_2O_7$ to 1 L with distilled water. Store in a glass-stoppered bottle.

7.11. Starch indicator solution (0.5%, preserved with salicylic acid).

7.12. Hypochlorite solution (household bleach).

7.13. Standard iodine solution (0.1 N). Dissolve 40 g of KI in 25 mL of distilled water. Add 13 g of resublimed iodine, and stir until dissolved. Transfer solution to a 1-L volumetric flask and dilute to volume. Standardize against 0.100 N $Na_2S_2O_3$.

7.14. Standard iodine titrant (0.0282 N). Dissolve 25 g of KI in a small amount of distilled water in a 1-L volumetric flask. Add enough standardized 0.1 N iodine solution to yield a 0.0282 N solution. Dilute to 1 L with distilled water. Standardize daily using 0.025 N $Na_2S_2O_3$ solution. Store in amber bottles or in the dark. Keep solution out of direct sunlight at all times and keep from all contact with rubber.

8. Calibration and Standards

8.1. Standard sodium thiosulfate (0.025 N).

8.1.1. Add, with constant stirring, 1 mL of concentrated H_2SO_4, 10 mL of 0.025 N $K_2Cr_2O_7$, and 1 g of KI to 80 mL of distilled water. Let stand for 6 min in the dark.

8.1.2. Titrate immediately with 0.025 N $Na_2S_2O_3$ titrant until the yellow color of the liberated iodine is almost discharged.

8.1.3. Add 1 mL of starch indicator solution and continue titrating until the blue color disappears.

8.1.4. Calculate the normality of the $Na_2S_2O_3$.

$$N = \frac{0.25}{V} ,$$

where N = normality of $Na_2S_2O_3$, and
V = volume of $Na_2S_2O_3$ used (mL).

8.2. Standard iodine solution (0.0282 N).

8.2.1. Place approximately 20 mL of distilled water in a 125-mL Erlenmeyer flask. Add 5 mL of glacial acetic acid and approximately 1 g of KI. Add 10 mL of 0.0282 N iodine solution.

8.2.2. Titrate, out of direct sunlight, using 0.025 N $Na_2S_2O_3$ until the yellow color of the liberated iodine is almost discharged. Add 1 mL of starch solution and titrate until the blue color is discharged.

8.2.3. Calculate the normality of the iodine solution.

$$N(i) = \frac{V \times N}{10},$$

where N(i) = normality of iodine solution,
V = volume of $Na_2S_2O_3$ used (mL), and
N = normality of $Na_2S_2O_3$.

8.3. Standard chlorine solution.

8.3.1. Place 2 mL of acetic acid and 20 mL of distilled water in a 125-mL Erlenmeyer flask. Add approximately 1 g of KI. Add 10 mL of standard chlorine solution.

8.3.2. Titrate with standardized 0.025 N $Na_2S_2O_3$ titrant until the yellow iodine color almost disappears.

8.3.3. Add 1 to 2 mL of starch indicator solution and continue titrating until the blue color disappears.

8.3.4. Calculate the concentration of the standard chlorine solution.

$$Cl = \frac{V \times N \times 35.45}{10},$$

where Cl = chlorine as Cl_2 (mg/mL),
V = volume of titrant used (mL), and
N = normality of $Na_2S_2O_3$.

8.3.5. Prepare a standard chlorine working solution by diluting 10 mL of standard chlorine solution to 100 mL in a volumetric flask.

8.4. Standard phenylarsine oxide titrant.

8.4.1. Place 1 mL of freshly standardized iodine solution (0.0282 N) in a 250-mL beaker. Dilute to 200 mL with distilled water. Add 1 mL of KI solution.

8.4.2. Titrate with phenylarsine oxide solution using the amperometric end point, Step 9.2.

8.4.3. Calculate the normality of phenylarsine oxide.

$$N(p) = \frac{1.00 \times N(i)}{V} ,$$

where N(p) = normality of phenylarsine oxide,
N(i) = normality of iodine solution, and
V = volume of titrant used (mL).

8.5. Quality control (QC) standards.

8.5.1. A distilled water sample, an Environmental Protection Agency water supply QC residual Cl sample, and four Cl_2 samples prepared from the standard chlorine working solution (Step 8.3.5) are analyzed with each sample batch.

8.5.2. Prepare the four Cl_2 samples by pipetting 5, 4, 3, and 2 mL of the chlorine working solution into four 250-mL beakers. Dilute each sample to 200 mL with distilled water.

8.5.3. Calculate the concentration of each Cl_2 sample.

$$C = \frac{V \times S}{2} ,$$

where C = concentration of chlorine solution (mg/L Cl_2),
V = volume of Cl_2 working solution (mL),
S = concentration of Cl_2 standard solution (mg/L).

9. Procedure

9.1. Determination of free residual chlorine.

9.1.1. Open the **REFILL** valve and fill the pipette in the amperometric titrator to the **0** mark.

9.1.2. Rinse the delivery tube and electrode and agitator assemblies with distilled water. Discard the drainage. If more than one week has passed since the last use of the apparatus, remove the electrode and clean with a cotton swab that has been dipped in 1:1 HNO_3.

9.1.3. Place a 200-mL sample (or a known volume of sample diluted to 200 mL) in a 250-mL beaker.

9.1.4. Add one eyedropper, approximately 1 mL, of pH 7 buffer solution.

9.1.5. Place the **FREE-OFF-TOTAL** switch in its **FREE** position.

9.1.6. Titrate the sample with phenylarsine oxide until the indicating pointer of the milliammeter falls to about 70% of full scale.

9.1.7. Add the titrant in decreasing increments until the addition of one more increment no longer causes a downward deflection of the pointer. The end point is that volume noted before the additional increment that no longer caused a downward deflection.

9.1.8. Record the volume of titrant used to reach the first end point, but do not refill the pipette.

9.2. Total residual chlorine.

9.2.1. Transfer the **FREE-OFF-TOTAL** switch from the **FREE** to the **TOTAL** position.

9.2.2. Add one eyedropper of pH 4 buffer solution and one eyedropper of 5% KI solution.

9.2.3. Titrate to a second end point.

9.2.4. Record the total volume of titrant used to reach the second end point and place the **FREE-OFF-TOTAL** switch in the **OFF** position.

10. Operation of Equipment

10.1. Refer to the operating manual for the amperometric titrator.

11. Calculations

11.1. Concentration of free residual chlorine.

$$Cl_2 - F = \frac{A \times N \times 35450}{V},$$

where Cl_2-F = free residual chlorine (mg/L),
A = end point for the first titration (mL),
N = normality of phenylarsine oxide, and
V = volume of sample used (mL).

11.2. Concentration of total residual chlorine.

$$Cl_2 - T = \frac{B \times N \times 35450}{V},$$

where Cl_2-T = total residual chlorine (mg/L),
B = end point for the second titration (mL),
N = normality of phenylarsine oxide, and
V = volume of sample used (mL).

12. Source Material

12.1. American Public Health Association, American Waterworks Association, and Water Pollution Control Federation, *Standard Methods for the Examination of Water and Wastewater*, 16th ed., Method 408C (American Public Health Association, Washington, DC, 1985).

Revisions or additions to the procedure are marked (▒▒▒▒). Where a section heading is marked, the entire section has been revised.

ALKALINITY IN WATER AND WASTE WATER

Analyte: Alkalinity	**Method No.:** WI500
Matrix: Water and waste water	**Detection Limit:** 1 mg/L
Procedure: Acid titration of hydroxide carbonate and bicarbonate	**Accuracy and Precision:** 101% ± 3% RSD
Effective Date: 01/03/84	**Author:** Mary Carol Williams

SAFETY NOTE: Before beginning this procedure, read all of the Material Safety Data Sheets for the chemicals listed in Sec. 6. Read Sec. 4.3 of the EM-9 Safety Manual for information on personal protective clothing and equipment.

1. Principle of Method

1.1. Standard sulfuric acid is used to titrate a sample solution to the phenolphthalein end point (pH 8.3) to determine phenolphthalein alkalinity (PALK).

1.2. The titration is continued to the methyl purple end point (pH 4.5) for total alkalinity measurement (TALK).

2. Accuracy and Precision

2.1. The determination of alkalinity in 34 Environmental Protection Agency (EPA) WP882/1 (73.4 ± 4.08 mg/L) reference samples over a period of 12 months had a mean of 73.9 mg/L and a relative standard deviation (RSD) of 3%.

2.2. Twenty-six samples spiked with 40 - 980 mg/L of $CO_3^{=}$ as Na_2CO_3 over a period of 12 months resulted in an average recovery of 99% and an RSD of 6%. The percent recovery ranged from 87% to 111%.

3. Interferences

3.1. Borates, phosphates, and silicates will also titrate as alkalinity.

3.2. Substances such as salts of weak organic and inorganic acids, present in large amounts, may cause interferences in the electrometric pH measurements.

3.3. Oil and grease coating the pH electrode may cause sluggish response.

4. Collection and Storage of Samples

4.1. Do not filter, dilute, concentrate, or alter samples in any way.

4.2. Refrigerate samples at 4°C. Complete analysis within 14 days. Do not open sample bottles before analysis.

5. Apparatus

5.1. Digital burette: Brinkman Instruments Co., Westbury, New York.

5.2. pH meter: Beckman Model pHI 70, with temperature compensator. VWR Scientific, Los Alamos, New Mexico.

5.3. Porcelain casserole: 100-mL.

5.4. Magnetic stirrer.

5.5. Stirring bar.

6. Reagents

6.1. Sodium carbonate (National Bureau of Standards standard).

6.2. Sodium carbonate solution (approximately 0.05 N). Place 2.5 ± 0.2 g of Na_2CO_3 (dried at 250°C for 4 h and cooled in a desiccator) into a 1-L volumetric flask and dilute to volume.

6.3. Sulfuric acid (0.1000 N). Prepare from DILUT-IT according to product instructions. Standardize against 40 mL of 0.05 N Na_2CO_3 solution with approximately 60 mL of distilled water added by titrating potentiometrically to approximately pH 5. Lift the electrode and rinse into the beaker. Boil solution gently for 3 to 5 min under a watch glass cover. Cool to room temperature. Rinse watch glass into the beaker. Continue titration to a pH inflection point.

6.4. Calculate the normality of the sulfuric acid.

$$N = \frac{A \times B}{53 \times C},$$

where N = normality of sulfuric acid,
A = Na_2CO_3 weighed into 1 L (g),
B = Na_2CO_3 solution (mL), and
C = acid used to inflection point (mL).

6.5. Sulfuric acid (concentrated, reagent-grade).

6.6. Sulfuric acid (0.02 N). Dilute 200 mL of 0.1 N sulfuric acid to 1 L with distilled deionized water. Standardize by potentiometric titration of 15 mL 0.05 N Na_2CO_3 solution as above.

6.7. Spike solution. Dissolve 1.766 g of Na_2CO_3 in approximately 200 mL of distilled deionized water in a 1-L volumetric flask. Dilute to volume and refrigerate. The solution is stable for 6 months.

6.8. Phenolphthalein indicator. Kodak, VWR Scientific, Los Alamos, New Mexico.

6.9. Methyl purple indicator. Fleisher, VWR Scientific, Los Alamos, New Mexico.

7. Procedure

7.1. Determine the blank by titrating 50.0 mL of distilled deionized water to a pH 4.5 end point (purple) with 0.02 N H_2SO_4. Use the digital burette and methyl purple indicator. Record the volume of H_2SO_4 used.

7.2. Add 50 mL of distilled deionized water and a few drops of phenolphthalein indicator to a 2- to 50-mL sample. Titrate to a pH 8.3 end point (colorless) with 0.02 N H_2SO_4. Record the volume of H_2SO_4 used.

7.3. Add a few drops of methyl purple to the above sample and titrate to a pH 4.5 end point (purple). Record the volume of H_2SO_4 used.

7.4. Repeat Steps 7.2 and 7.3 for 10% quality control samples, 10% duplicates, and 10% spikes.

7.4.1. Spike a sample by adding 2 mL of the spike solution to the sample for a total volume of 50 mL. Use 10 mL of the spiked sample for titration to the pH 4.5 end point.

7.4.2. Titrate the spike solution for each sample batch run. Substitute distilled deionized water for sample and use the result to calculate recovery.

7.5. Potentiometric titration of low alkalinity. For alkalinity of <20 mg/L, titrate 100 to 200 mL as above. Stop titration at a pH in the range of 4.3 to 4.7. Record volume and exact pH. Very carefully add titrant to lower pH exactly 0.3 pH units and record the volume used.

8. Calculations

8.1. Phenolphthalein alkalinity.

$$C = \frac{A \times N \times 50{,}000}{V} ,$$

where C = phenolphthalein alkalinity,
A = volume of H_2SO_4 used to pH 8.3 end point (mL),
N = normality of acid, and
V = sample (mL).

8.2. Total alkalinity.

$$C = \frac{B \times N \times 50{,}000}{V} ,$$

where C = total alkalinity (mg/L of $CaCO_3$),
B = total volume of H_2SO_4 used to pH 4.5 end point (mL),
N = normality of acid, and
V = sample (mL).

8.3. Total alkalinity (low).

$$C = \frac{(2A - B) \times N \times 50{,}000}{V} ,$$

where C = total alkalinity (mg/L of $CaCO_3$),
A = volume of H_2SO_4 used to first recorded pH (mL),
B = total volume H_2SO_4 used to reach pH 0.3 units lower (mL),
N = normality of acid, and
V = sample (mL).

8.4. Spike recovery should be 40 mg/L $CO_3^{=}$ as Na_2CO_3 ± 8 (allowable) or ± 4 (desirable) or 67 mg/L as $CaCO_3$.

$$R = Cs - C ,$$

where R = amount recovered (mg/L),
Cs = concentration of spiked sample (mg/L), and
C = concentration of unspiked sample (mg/L).

8.5. Percent recovery should be between 85% and 115%.

$$\%R = \frac{R \times 100}{A},$$

where %R = percent recovery,
R = amount recovered (mg/L), and
A = amount added (mg/L).

9. Source Materials

9.1. American Public Health Association, American Waterworks Association, and Water Pollution Control Federation, *Standard Methods for the Examination of Water and Wastewater*, 16th ed., Method 403 (American Public Health Association, Washington, DC, 1985).

9.2. Environmental Monitoring and Support Laboratory, *Methods for Chemical Analysis of Water and Waste*, Method 310.1 (Office of Research and Development, US Environmental Protection Agency, Cincinnati, Ohio, 1983).

Revisions or additions to the procedure are marked (▒▒▒▒). Where a section heading is marked, the entire section has been revised.

CHEMICAL OXYGEN DEMAND IN WATER AND WASTE WATER — TITRATION

Analyte: Chemical Oxygen Demand (COD)	**Method No.:** WI510
Matrix: Water and waste water	**Range:** 20 - 900 mg/L
Procedure: Sulfuric and chromic acid digestion followed by titration of unreduced chromate.	**Detection Limit:** 20 mg/L **Accuracy and Precision:** 94% ± 3% RSD
Effective Date: 01/02/84 to 01/01/90	**Author:** Mary Carol Williams

SAFETY NOTE: Before beginning this procedure, read all of the Material Safety Data Sheets for chemicals listed in Section 6. Read Section 4.3 of the HSE-9 Safety Manual for information on personal protective clothing and equipment.

1. Principle of Method

1.1. The sample is refluxed with boiling sulfuric acid and a known excess of potassium dichromate to oxidize organic matter. Silver sulfate is used as a catalyst, and mercuric sulfate is added to remove chloride interference.

1.2. After digestion and cooling, the unreduced potassium dichromate is titrated with ferrous ammonium sulfate.

1.3. The amount of oxidizable organic matter is calculated from the amount of potassium dichromate consumed.

2. Accuracy and Precision

2.1. The determination of COD in 19 EPA WP782/3 (15.6 ± 5.3 mg/L) reference samples over a period of 12 months had a mean of 14.6 mg/L and a relative standard deviation of 10%.

2.2. The relative standard deviation of 50 determinations of an in-house COD standard (490 mg/L) over a period of 12 months was 3%.

2.3. Thirty-eight samples spiked with 40 mg/L of COD over a period of 12 months resulted in an average recovery of 90% and a relative standard deviation of 11%. The percent recovery ranged from 75% to 105%.

3. Interferences

3.1. Traces of organic material from sampling bottles, glassware, reagents, or the atmosphere may cause gross, positive errors.

3.2. Volatile materials may be lost when the sample temperature rises during the sulfuric acid addition step. Cool the flask during addition of the sulfuric acid solution to minimize this loss.

3.3. Chlorides are quantitatively oxidized by dichromate and represent a positive interference. Complexation of chlorides by the addition of mercuric sulfate eliminates this interference.

3.4. Nitrite exerts a COD of 1.1 mg oxygen per mg of nitrite. This interference is usually insignificant because of low nitrite levels.

3.5. Reduced inorganic species such as iron, sulfide, etc., are oxidized quantitatively under test conditions.

3.6. Volatile straight-chain aliphatic compounds are not oxidized to any appreciable extent.

4. Collection and Storage of Samples

4.1. Collect samples in polyethylene bottles and immediately acidify to pH <2 with concentrated H_2SO_4. Store at 4°C.

4.2. Analyze biologically active samples as soon as possible.

4.3. Mix samples that contain visible particulates well to permit removal of representative aliquots.

4.4. Complete analysis within 28 days.

5. Apparatus

5.1. Boiling flask: round bottom, 500-mL with ground-glass 24/40 neck.

5.2. Heating stand with ceramic burners.

5.3. Liebig condensers with 24/40 ground-glass joint.

5.4. Erlenmeyer flask: 500-mL.

5.5. Burette: 25-mL.

5.6. Glass boiling beads.

6. Reagents

6.1. Potassium dichromate (NBS standard).

6.2. Standard potassium dichromate solution (0.25 N). Dissolve 12.259 g of primary standard grade $K_2Cr_2O_7$, dried at 103°C for 2 h, in distilled water and dilute to 1 L.

6.3. Silver sulfate (reagent-grade crystal or powder). J. T. Baker, VWR Scientific, LANL, Los Alamos, New Mexico.

6.4. Mercuric sulfate (powdered). J. T. Baker, VWR Scientific, LANL, Los Alamos, New Mexico.

6.5. Sulfuric acid (concentrated, sp. gr. 1.84). J. T. Baker, VWR Scientific, LANL, Los Alamos, New Mexico.

6.6. Silver sulfate-sulfuric acid reagent. Add 25 g of silver sulfate to a 4.09 kg bottle of concentrated H_2SO_4. Let stand for 2 days to dissolve the Ag_2SO_4. The silver sulfate may be dissolved in about 30 min with continuous stirring.

6.7. Standard ferrous ammonium sulfate titrant (FAS, approximately 0.25 N). Dissolve 98 g of $Fe(NH_4)_2(SO_4)_2 \times 6H_2O$ in distilled water. Add 20 mL of concentrated H_2SO_4, cool, and dilute to 1 L. Standardize this solution each day against the $K_2Cr_2O_7$ solution in Step 6.1.

6.8. Ferroin indicator solution. Dissolve 1.485 g 1,10-phenanthroline monohydrate and 0.695 g $FeSO_4 \times 7H_2O$ in distilled water and dilute to 100 mL.

6.9. Stock COD standard potassium hydrogen phthalate (PHP). Lightly crush and then dry potassium acid phthalate ($HOOCC_6H_4COOK$) to a constant weight at 120°C. Dissolve 0.425 g in distilled water and dilute to 1 L. The PHP has a theoretical COD of 1.176 g oxygen/g. This solution has a theoretical COD of 500 mg oxygen/L. Prepare fresh every six months and refrigerate.

7. Calibration Standard

7.1. Standardization of FAS. Add 25 mL of 0.25 N $K_2Cr_2O_7$ solution to approximately 200 mL of distilled water. Add 20 mL of concentrated H_2SO_4. Cool. Titrate with FAS using 1 drop of ferroin indicator. The color change is sharp (blue-green to reddish-brown).

7.2. Calculate the normality of FAS.

$$N = \frac{K \times 0.25}{FAS},$$

where N = normality of FAS,
K = potassium dichromate used (mL), and
FAS = volume of FAS (mL).

7.3. Run a blank and four standards with each titration. Add the following volumes of stock COD standard potassium acid phthalate to 500-mL boiling flasks and bring the final volume to 50 mL.

COD standard (mL)	COD/L (mg)
0.0	0.0
5.0	125.0
10.0	250.0
15.0	375.0
20.0	500.0

8. Procedure

8.1. Standard and sample set up.

8.1.1. Place boiling beads in 500-mL boiling flasks. Depending on the expected COD level, add 5 to 50 mL of unfiltered H_2SO_4 sample to the boiling flasks. Add distilled water to a final volume of 50 mL.

8.1.2. Spike 10% of the samples by adding 4 mL of COD stock standard to the flask. Include 10% duplicates and 10% quality control samples.

8.1.3. Add 1.0 g $HgSO_4$ and 5.0 mL of concentrated H_2SO_4. Swirl until the H_2SO_4 has dissolved.

8.1.4. Place the reflux flask in an ice bath and slowly add, with swirling, 25.0 mL of 0.25 N $K_2Cr_4O_7$.

8.1.5. Add 70 mL of Ag_2SO_4-H_2SOO_4 solution to each cooled boiling flask, using slow addition and swirling.

8.1.6. Wash the neck of the flask with distilled water. Hook up the reflux condenser. Keep the opening toward the back wall of the hood.

CAUTION: Superheating may result if the solution is not thoroughly mixed and the mixture may be blown out of the open end of the condenser.

8.1.7. Attach the water line to the condenser and turn on the water before applying heat.

8.1.8. Reflux for 2 h. Let cool.

8.1.9. Wash down the condenser with approximately 25 mL of distilled water.

8.1.10. Transfer the contents of the boiling flask to a 500-mL Erlenmeyer flask. Rinse the boiling flask with approximately 25 mL of distilled water two times and add the rinses to the Erlenmeyer flask. Dilute the acid solution to approximately 300 mL with distilled water and allow to cool to room temperature.

8.2. Titration

8.2.1. Add 8 to 10 drops of ferroin indicator to each Erlenmeyer flask.

8.2.2. Fill the burette with FAS solution.

8.2.3. Titrate the excess $K_2Cr_2O_7$ with FAS solution. The first sharp color change from blue-green to reddish-brown is the end point of the titration. The bluegreen may reappear but do not continue titration.

8.2.4. Refill the burette after each titration.

9. Calculation

9.1. Concentration of chemical oxygen demand.

$$COD = \frac{(A - B) \times N \times 8000}{V},$$

where COD = concentration of chemical oxygen demand (mg/L),
A = volume of FAS solution required for titration of the blank (mL),
B = volume of FAS solution required for titration of the sample (mL),
N = normality of FAS solution, and
V = volume of sample used (mL).

9.2. Spike recovery should be 40 mg/L ± 8.0 (allowable) or ± 4.0 (desirable).

$$R = Cs - C \quad ,$$

where R = amount recovered (mg/L),
Cs = concentration of spiked sample (mg/L), and
C = concentration of unspiked sample (mg/L).

9.3. Percent recovery should be within 85% to 115%.

$$\%R = \frac{R \times 100}{A} \quad ,$$

where %R = percent recovery,
R = amount recovered (mg/L), and
A = amount added (mg/L).

10. Source Materials

10.1. American Public Health Association, American Waterworks Association, and Water Pollution Control Federation, *Standard Methods for the Examination of Water and Wastewater*, 16th ed., Method 508A (American Public Health Association, Washington, DC, 1985).

10.2. Environmental Monitoring and Support Laboratory, *Methods for Chemical Analysis of Water and Waste*, Method 410.1 (Office of Research and Development, U.S. Environmental Protection Agency, Cincinnati, Ohio, 1983).

HALIDES IN WASTE WATER AND RCRA WASTE

Analyte: Halides	**Method No.:** WI520
Matrix: Waste water & RCRA waste	**Detection Limit:** 1 mg/L
Procedure: Titration of sample containing chloride, iodide, and bromide with $AgNO_3$	
Effective Date: 09/02/86 to 02/02/87	**Authors:** Evangeline Hodge Mary Carol Williams

SAFETY NOTE: Before beginning this procedure, read all of the Material Safety Data Sheets for the chemicals listed in Section 6. Read Section 4.3 of the HSE-9 Safety Manual for information on personal protective clothing and equipment.

1. Procedure

1.1. Standard silver nitrate is used in the titration of a sample containing halides using potassium chromate as the indicator. A reddish-brown color indicates the end point.

2. Accuracy and Precision

2.1. Data not available.

3. Interferences

3.1. Fluorides do not titrate with silver.

3.2. Results from the titration of iodides are less accurate because of adsorption phenomena.

3.3. Sulfide, thiosulfate, and sulfite ions interfere but can be removed by treatment with hydrogen peroxide.

3.4. Orthophosphate in excess of 25 mg/L interferes by precipitating as silver phosphate.

3.5. Iron in excess of 10 mg/L interferes by masking the end point.

4. Collection and Storage of Samples

4.1. No special handling or preservation techniques are required.

4.2. Most samples will be prepared from the ash formed in Method No. WI640, Heat Capacity of Combustible Materials.

5. Apparatus

5.1. Digital burette: 25-mL, Brinkmann Instruments Co., Westbury, New Jersey.

5.2. Porcelain casserole: 100-mL.

5.3. Magnetic stirrer.

5.4. Stirring bar.

6. Reagents

6.1. Distilled deionized water (DDW). Pass distilled water through an ion exchange column containing a mixture of both acidic cation and basic cation exchange resins.

6.2. Potassium chloride (0.1000 N). Dissolve 7.455 g KCl (NBS standard reference material, dried at 105°C for 2 h and stored in a desiccator jar) in distilled water and dilute to 1 L.

6.3. Silver nitrate titrant (0.1000 N). Dissolve 16.987 g $AgNO_3$ (dried at 105°C for 2 h and at 150°C for 1 h) in distilled water and dilute to 1 L. Store in a brown bottle. Standardize against 0.1 N KCl as described in Step 7.3.

6.4. Calculate the normality of the $AgNO_3$ solution.

$$N = \frac{0.1 \times A}{B} ,$$

where N = normality of $AgNO_3$,
A = amount of 0.1 N KCl used (mL), and
B = amount of $AgNO_3$ used (mL).

6.5. Indicator solution. Dissolve 65 g of potassium chromate in 100 mL of distilled water.

7. Procedure

7.1. Aqueous solutions are titrated undiluted. Ash from heat capacity analysis, Method No. WI640, is diluted in 50 mL of DDW.

7.2. Establish a reagent blank by adding 1 mL of indicator solution to 10 mL of DDW in a porcelain casserole and titrating with 0.1 N $AgNO_3$ to a reddish-brown end point. Record the blank value in a Laboratory notebook.

7.3. Titrate 25 mL of 0.1 N KCl standard solution with 0.1 N $AgNO_3$ to check the normality of the $AgNO_3$ solution. Record the value in the Laboratory notebook. Carefully note the end point characteristics.

7.4. Place 10 mL or a suitable aliquot of sample in a porcelain casserole. Add 1 mL of indicator solution. Slowly titrate the sample solution against 0.1 N $AgNO_3$ with constant stirring until a reddish-brown color remains after continued stirring. The end point should be consistent in color with that of the KCl and blank titrations.

8. Calculations

8.1. Concentration of halide in the sample in mg/L.

$$C = \frac{(A - B) \times N \times 35450}{V} ,$$

where C = concentration of halide in sample reported as chloride (mg/L),
A = volume used to titrate sample (mL),
B = volume used to titrate blank (mL),
N = normality of $AgNO_3$, and
V = volume of sample (mL).

8.2. Concentration of halide in the sample in mg/g.

$$C_1 = \frac{C \times 50 \text{ mL}}{W} ,$$

where C_1 = concentration of halide in the sample (mg/g),
C = concentration of halide in the sample (mg/L), and
W = weight of original sample (g).

9. Source Materials

9.1. American Public Health Association, American Waterworks Association, and Water Pollution Control Federation, *Standard Methods for the Examination of Water and Wastewater*, 16th ed., Method 407A (American Public Health Association, Washington, DC, 1985).

SULFITE IN WATER AND WASTE WATER — TITRIMETRY

Analyte: Sulfite	**Method No.:** WI529
Matrix: Water and waste water	**Spike Range:** 1-500 mg/L
Procedure: Titrimetry	**Accuracy and Precision:** See Step 2.1.
Effective Date: 11/30/90	**Author:** Harold P. Patterson

SAFETY NOTE: Before beginning this procedure, read all of the Material Safety Data Sheets for the chemicals listed in Sec. 6. Read Sec. 4.3 of the EM-9 Safety Manual for information on personal protective clothing and equipment.

1. Principle of Method

1.1. An acidified sample containing a starch indicator is titrated with a standard potassium iodide-iodate titrant to a faint, permanent, blue end point which occurs when the sulfite has been completely exhausted.

2. Accuracy and Precision

2.1. No in-house quality control sample is available at this time.

3. Interferences

3.1. The accuracy of the method is affected if the temperature of the sample is above 50°C.

3.2. Contact with air may cause oxidation of the sulfite. This effect may be minimized by not filtering the sample and keeping the buret tip below the surface of the sample.

3.3. Other oxidizing substances such as organic compounds, ferrous iron, and sulfide can cause a positive interference. Sulfide can be removed by adding zinc acetate and then analyzing the supernate after the precipitate has settled.

3.4. Nitrite gives a negative interference by oxidizing the sulfite when the sample is acidified. This interference can be eliminated by the addition of sulfamic acid.

3.5. Copper and other heavy metals can cause a negative interference by acting as a catalyst to oxidize the sulfite. This can be overcome by addition of ethylenediaminetetraacetic acid (EDTA) to complex the metals.

4. Collection and Storage of Samples

4.1. Minimize contact with air. If the temperature of the sample is greater than 50°C it must be cooled. Add 1 mL of EDTA solution to polyethylene bottles before sample collection. Analyze for sulfite as soon as possible after taking the sample, preferably at the collection site.

5. Apparatus

5.1. Burette: 25-mL, Brinkman digital. VWR Scientific, Los Alamos, NM.

5.2. Flask: 125-mL, Erlenmeyer. VWR Scientific, Los Alamos, NM.

5.3. Flask: 1-L, class A, volumetric. VWR Scientific, Los Alamos, NM.

5.4. Pipettes: class A, various sizes. VWR Scientific, Los Alamos, NM.

6. Reagents

6.1. Sulfuric acid (50%). Carefully and slowly add 50 mL of concentrated H_2SO_4 to 50 mL of distilled water.

6.2. Starch solutions (0.5%). Preserved with salicylic acid. Banco chemicals, VWR Scientific, Los Alamos, NM.

6.3. Potassium iodide-iodate titrant (0.0125 N). Dissolve 445.8 mg of anhydrous potassium iodate (dried for 2 h at 120°C), 4.25 g of potassium iodide, and 310 mg of sodium bicarbonate in water in a 1-L volumetric flask and dilute to volume. The titrant is equivalent to 500 μg SO_3/mL.

6.4. Sulfamic acid (crystalline).

6.5. EDTA reagents. Dissolve 2.5 g of EDTA disodium salt in 100 mL of distilled water.

6.6. Spike solution. Add 0.5 g of Na_2SO_3 (anhydrous) to a 1-L volumetric flask and dilute to volume with distilled water.

6.7. Zinc acetate.

7. Procedure

7.1. Pipette a 50-mL sample into a 250-mL Erlenmeyer flask. Add 50 mL of distilled water.

7.2. Add 1 mL of 50% H_2SO_4 solution to the flask.

7.3. Add 0.1 g of sulfamic acid crystals.

7.4. Add 1 mL of starch solution.

7.5. Titrate with potassium iodide-iodate titrant until a faint but permanent blue color develops. Slowly swirl the flask to prevent mixing with air. View the color change against a white background. Run duplicate samples.

7.6. Run a 50-mL distilled water blank using the above titration procedure (Steps 7.1 to 7.5).

7.7. Run a 50-mL aliquot of the spike solution using the above titration procedure (Steps 7.1 to 7.5). Check the titer of this solution each time you use it for spiking because it changes slowly with time. Spiking samples will determine if there are any interferences.

7.8. Add 50 mL of the spike solution to 50 mL of sample and run using the above titration procedure (Steps 7.1 to 7.5).

7.9. If sulfide is present, it can be removed by pretreating 100 mL of solution with 0.5 g of zinc acetate and analyzing the supernate after the precipitate has settled. Sulfide is not normally found in our plant discharge.

8. Calculations

8.1. Use the following equation to calculate SO_3 concentration:

$$\text{mg/L } SO_3 = \frac{(A - B) \times N \times 40{,}000}{V} ,$$

where A = potassium iodide-iodate titrant used for sample (mL),
B = potassium iodide-iodate titrant used for blank (mL),
N = normality of potassium iodide-iodate titrant,
40,000 = constant used to convert to equivalence of sulfite/L, and
V = volume of sample (mL).

8.2. Calculate the spike recovery using the following equation:

$$\% \text{ Recovery} = \frac{S - B}{S_a} \times 100 ,$$

where S = SO_3 of sample (mg/L),
B = SO_3 in blank (mg/L), and
S_a = SO_3 added to sample (mg/L).

9. Source Material

9.1. American Public Health Association , American Waterworks Association, and Water Pollution Control Federation, *Standard Methods for the Examination of Water and Wastewater*, 17th ed., Method 4500-SO_3^{-2} B (American Public Health Association, Washington, DC, 1989).

TOTAL CATIONS IN WATER AND WASTE WATER — ION EXCHANGE AND POTENTIOMETRIC TITRATION

Analyte: Total cations	**Method No.:** WI530
Matrix: Water and waste water	**Detection Limit:** 0.1 meq/L
Procedure: Ion exchange and potentiometric titration	**Precision:** ± 1.1%
Effective Date: 05/01/86	**Author:** Harold P. Patterson

SAFETY NOTE: Before beginning this procedure, read all of the Material Safety Data Sheets for the chemicals listed in Sec. 7. Read Sec. 4.3 of the EM-9 Safety Manual for information on personal protective clothing and equipment.

1. Principle of Method

1.1. The accuracy of the chemical analysis of waste water samples can be checked by determining the total cations present in the sample by ion exchange. A serious discrepancy between the total cations, milliequivalents per liter (meq/L), and the total cation concentration found by summing the analyzed constituents in meq/L can uncover a gross error in the analyses.

1.2. This ion exchange method is based on replacement of cations in the original sample with hydrogen ions furnished by a strong acidic cation exchange resin. The acid produced by passing a nonacidic waste water sample through an ion exchange column packed with a strongly acidic cation exchange resin is titrated with standard sodium hydroxide solution. The total alkalinity of the original sample must be measured to complete the calculation.

2. Detection Limit

2.1. A detection limit of 0.1 meq/L can be expected using a 10-mL sample aliquot.

3. Accuracy and Precision

3.1. No standard material is presently available to determine accuracy.

3.2. A monthly composite sample was analyzed six times over a 4-month period, giving an average value of 8.48 meq/L with a standard deviation of 0.1 meq/L at the 1σ level.

4. Interference

4.1. Complexing agents such as ethylenediaminetetraacetic acid (EDTA) can interfere.

5. Collection and Storage of Samples

5.1. Use nonacid samples and analyze as soon as possible.

6. Apparatus

6.1. Pipettes: class A, various sizes.

6.2. Beakers: various sizes.

6.3. Ion exchange columns: 10-mm by 100-mm glass column with 50-mL reservoir at the top. Made at the Los Alamos National Laboratory glass shop.

6.4. Column supports.

6.5. pH paper: in the range of 3.0-5.5.

6.6. Burette: 10-mL with 0.05-mL divisions.

6.7. Magnetic stirrer.

6.8. Stirring bars: Teflon.

6.9. Glass wool.

6.10. pH meter: Beckman, Model pHI 70, VWR Scientific, Los Alamos, New Mexico.

6.11. Stirring rod: 10-mm by 180-mm.

6.12. Pyrex baking dish: 8-in. by 10-in.

6.13. Buchner funnel: 500-mL, with filter flask and vacuum tubing.

6.14. Filter paper: Whatman No. 54, to fit Buchner funnel.

6.15. Heat lamps.

6.16. Volumetric flasks: 1-L.

7. Reagents

7.1. Ion exchange resin. Bio-Rad AG 50W-X8, 50-100 mesh hydrogen-form.

7.2. Hydrochloric acid (concentrated, reagent-grade).

7.3. Potassium acid phthalate solution (National Bureau of Standards [NBS] potassium biphthalate). Dry approximately 20 g of NBS potassium acid phthalate at 120°C for 2 h. Cool in a desiccator. Weigh 10.0 ± 0.5 g (to the nearest mg). Transfer solution to a 1-L volumetric flask and dilute to volume.

7.4. NaOH (1 N). Use DILUT-IT solution and prepare according to product instructions. VWR Scientific, Los Alamos, New Mexico.

7.5. NaOH (0.02 N). Prepare a 0.02 N NaOH solution from the 1 N NaOH DILUTE-IT solution by diluting 20 mL of the 1 N NaOH to 1 L in a volumetric flask. Standardize against the potassium acid phthalate solution.

7.5.1. Standardization of 0.02 N NaOH. Pipette 15 mL of the potassium acid phthalate solution from Step 7.3 into a 100-mL beaker. Add 20 mL of distilled H_2O. Titrate with 0.02 N NaOH solution to a pH of 8.7.

7.5.2. Calculate the normality of the sodium hydroxide.

$$N = \frac{A \times B}{204.2 \times C},$$

where N = normality of sodium hydroxide,
A = potassium acid phthalate weighed into 1-L flask in Step 7.3 (g),
B = volume of potassium acid phthalate used (mL), and
C = volume of sodium hydroxide used (mL).

7.6. pH buffer solutions (pH 4, 7, and 10). VWR Scientific, Los Alamos, New Mexico.

7.7. Potassium dihydrogen phosphate (NBS standard). Dry KH_2PO_4 in a desiccator. Weigh out 54.436 g and transfer to a 1-L volumetric flask. Add 180.2 mL of 1 N NaOH and dilute to volume with distilled water.

7.8. Washed sea sand. VWR Scientific, Los Alamos, New Mexico.

7.8.1. Add sand to the 400-mL mark of a 2-L beaker.

7.8.2. Place the beaker in a hood and add concentrated HCl to the 600-mL mark. Mix the HCl well into the sand with a large glass stirring rod. Let stand overnight.

7.8.3. While still in the hood, pour off excess HCl into another large waste beaker. Add 400 mL of distilled water and slurry with a large glass stirring rod to dilute the HCl. Let the sand settle and pour the solution off into the waste beaker. Wash with two additional 400-mL portions of distilled H_2O. Pour the waste beaker of HCl directly into a laboratory sink while running water for dilution.

7.8.4. Mount a 500-mL Buchner funnel containing a No. 54 filter paper on a 1-L filter flask. Transfer the beaker containing the sand to the 500-mL Buchner funnel.

7.8.5. Turn on the vacuum to suction off the liquid. Add 400 mL of distilled H_2O to wash the HCl from the sand. Wash with two additional 400-mL portions of distilled H_2O. Draw off as much liquid as possible with the vacuum.

7.8.6. Transfer the sand to a large Pyrex baking dish and place under heat lamps until completely dry.

7.8.7. Transfer the sand to a 600-mL beaker and cover to keep clean.

8. Calibration and Standards

8.1. Check the normality of the 0.02 N NaOH used for titration against the NBS potassium acid phthalate as in Steps 7.5.1 and 7.5.2.

9. Procedure

9.1. Prepare as many ion exchange columns as needed by placing a small piece of glass wool in the bottom of each column to hold back the resin slurry.

9.1.1. Add a water slurry of AG 50W-X8, 50-100 mesh hydrogen-form resin so that the resin fills the column to no less than 1/2 in. from the reservoir. Release any air bubbles that form in the resin by stirring with a stirring rod. Add distilled water to the reservoir and allow the resin to settle.

9.1.2. Add approximately 1/2 in. of washed sea sand to hold the resin in place. Release any air bubbles that form between the resin and sand interface by gentle agitation with a stirring rod.

9.1.3. Wash the column with 50 mL of distilled water. Discard washes. Place a clean 150-mL beaker with a Teflon stirrer under the column.

9.2. Place 5 mL of a nonacidic sample of TA-50 raw weekly composite (RWC) and 5 mL of TA-50 final weekly composite (FWC) sample into two separate columns. Collect the column effluents in the 150-mL beaker.

9.3. Place a 20-mL aliquot of nonacidic TA-257 RWC into another column. Collect the effluent in the 150-mL beaker.

9.4. Wash all columns with approximately 100 mL of distilled water and collect this wash in the 150-mL beaker.

9.5. Check the pH of the solution that discharges from the column using pH paper. Add an additional 5 to 10 mL of distilled water wash when no pH color change is indicated (pH 4 to 6). Allow the column to drain completely and remove the beaker containing the sample.

9.6. Titrate to a 4.5 pH end point using a standardized 0.02 N NaOH solution with a 10-mL burette graduated in .05-mL increments. The titration end point should be determined with a pH meter.

9.7. Column regeneration.

9.7.1. The column can be used again after the ion exchange resin has been regenerated. Pass 50 mL of 3 N HNO_3 through the column.

9.7.2. Wash the column with sufficient distilled water to remove the excess 3 N HNO_3. Verify that excess 3 N HNO_3 was removed by checking the effluent with pH paper (pH of 4 to 6). The column can now be used for another sample.

10. Operation of Equipment

10.1. Calibrate the pH meter with standard pH buffers 4 and 7 or 7 and 10 depending on the expected pH range of the sample. Recalibrate after 4 h or after ambient temperature changes greater than 10°F.

10.2. Standardization of pH meter.

10.2.1. Pour 40 mL of pH 7 buffer into a 50-mL beaker. Add a stirring bar. Rinse the electrode with water and wipe with a Kimwipe. Immerse electrodes well below the surface of the solution and turn on the magnetic stirrer.

10.2.2. Clear the memory of the pH meter by pressing the **CLR** button. Be sure **ATC** and **AUTO** mode are activated.

10.2.3. Press the button corresponding to the first point of the two-point calibration curve. Let the instrument cycle until **AUTO** stops blinking on the instrument display and a prompt arrow appears. The value should be 7.00 ± 0.1.

10.2.4. Remove the electrodes and rinse with distilled water. Wipe off excess water with a Kimwipe. Do this between all readings.

10.2.5. Pour 40 mL of the second pH buffer into a beaker and add a stirring bar. Turn on the stirring motor. Immerse electrodes well below the surface of the solution.

10.2.6. Press the second button of the two-point calibration curve. Let the instrument cycle as before. The pH value obtained should be within ± 0.1 pH units of the certified value. The instrument is now calibrated.

10.2.7. Check the calibration by reading a pH 7 buffer. Press the pH button and let the instrument cycle. The reading should be 7.00 ± 0.1. Restandardize the instrument if the value obtained is different from 7.00 ± 0.1.

10.3. Check the quality control standard.

10.3.1. Dilute 5 mL of the solution prepared in Step 7.7 to 1 L with distilled water.

10.3.2. The pH of this solution equals 6.87 ± 0.06. The pH value should be in the range of 6.81 - 6.93. Restandardize the pH meter if the pH is out of range.

10.4. Make all sample readings with electrodes well below the surface of the water and while the sample is being stirred. Read in pH mode without auto for samples.

11. Calculations

11.1. Calculate the milliequivalents of total cations in the sample using the following equation:

$$E = \frac{A \times B \times 1000}{C} + \frac{D}{50} ,$$

where E = total cations (meq/L),
A = volume of standard NaOH used (mL),
B = normality of standard NaOH,
C = volume of sample used (mL), and
D = total alkalinity (mg/L).

11.2. Use the following table to convert from mg/L to meq/L.

Analyte in (mg/L)	Divide Analyte by the Atomic Wt.
Na	23
Ca	20
Mg	12
K	39
NH_3-N	14
Total Alkalinity	50
Cl	35.5
F	19
SO_4	48
NO_3-N	14

11.3. The total analyzed anions in meq/L should balance the total cations (E) in meq/L. The difference between the two should be less than 10%. The total analyzed cations should agree with the determined (E) value. Correct any serious discrepancies by repeating those cation or anion analyses that appear to be in error.

12. Source Material

12.1. American Public Health Association, American Waterworks Association, and Water Pollution Control Federation, *Standard Methods for the Examination of Water and Wastewater* ,16th ed., Method 404C and 402 (American Public Health Association, Washington, DC, 1985).

Revisions or additions to the procedure are marked (▒▒▒). Where a section heading is marked, the entire section has been revised.

ASH OF ORGANIC WASTE MATERIAL

Analyte: Ash	**Method No.:** WI600
Matrix: Organic waste chemicals	**Detection Limit:** 0.002% ash per 10.0-g sample
Procedure: The sample is ashed at 775°C in a muffle funace and the remaining residue is weighed.	**Precision:** 18% RSD for volatile sample containing 0.5% ash
Effective Date: 01/28/87 to 01/06/92	**Author:** Mary Carol Williams

SAFETY NOTE: Before beginning this procedure, read all of the Material Safety Data Sheets for the chemicals listed in Sec. 6. Read Sec. 4.3 of the EM-9 Safety Manual for information on personal protective clothing and equipment.

1. Principle of Method

1.1. A sample contained in a porcelain evaporating dish is ignited and allowed to burn until only ash and carbon remain. The carbonaceous residue is reduced to an ash by heating in a muffle furnace at 775°C, cooled and weighed.

2. Accuracy, Precision, and Sensitivity

2.1. There is no reference material available to measure the accuracy of this procedure.

2.2. Five ash measurements of an organic waste sample had a relative standard deviation (RSD) of 18% for a volatile sample containing 0.5% ash.

2.3. The sensitivity of the method is dependent on the size and volatility of the sample. The minimum detectable percent ash of a 10.0-g sample is 0.002%.

3. Interferences

3.1. Accurate weighing of volatile samples is very difficult. Placing a volatile sample in the freezing compartment of the refrigerator prior to inital weighing will reduce the loss.

3.2. Some samples are reactive when heated and may foam or splatter.

4. Collection and Storage of Samples

4.1. Samples are collected in acid-washed bottles and are stored at room temperature.

CAUTION: These samples may be determined to be hazardous Resource Conservation and Recovery Act (RCRA) waste. The analyst must wear a lab coat, safety glasses, and gloves.

5. Apparatus

5.1. Porcelain evaporating dish: 100-mL.

5.2. Analytical balance: capable of weighing to 0.1 mg.

5.3. Electric muffle furnace: capable of maintaining a temperature of 775°C ± 25°C.

6. Reagents

6.1. Isopropyl alcohol (99%).

7. Procedure

7.1. Heat the evaporating dish or crucible at 700°C - 800°C for 10 min or more. Cool to room temperature in a suitable container, and weigh to the nearest 0.1 mg.

NOTE: The container in which the dish or crucible is cooled should not contain a desiccating agent. In addition, all weighings of the crucibles should be performed as soon as the crucibles have cooled. If it is necessary that the crucibles remain in the desiccator for a longer period, all subsequent weighings should be made after allowing the crucibles and contents to remain in the desiccator for the same length of time.

7.2. The quantity of sample taken will depend upon the ash content of the material. Weigh sufficient sample (up to a maximum of 100 g) into the dish or crucible to give up to 20 mg of ash. For sample weights that require more than one filling of the dish, obtain the weight from the difference between the initial and final weights of a suitable sample container. Weigh the sample to the nearest 0.1 mg.

CAUTION: The sample may contain water, which can cause spattering. The operator should heat the sample cautiously in a hood while wearing safety goggles.

Heat the dish or crucible and sample until the contents can be ignited with a flame. Maintain at a temperature such that the sample continues to burn at a uniform and moderate rate, leaving only ash and carbon when the burning ceases.

7.3. If the sample contains sufficient moisture to cause foaming and loss of material, discard the sample, and to an additional sample add 1 to 2 mL of 99% isopropyl alcohol before heating.

CAUTION: Isopropyl alcohol is flammable. Keep away from heat, sparks, and open flame. Keep container closed. Use with adequate ventilation. Avoid prolonged breathing of vapor or spray mist. Avoid contact with eyes and skin. Do not take internally.

Place several strips of ashless filter paper in the mixture and heat; when the paper begins to burn, the greater part of the water will have been removed.

7.4. Heat the residue in the muffle furnace at 775°C ± 25°C until all carbonaceous material has disappeared. Cool the dish to room temperature in a suitable container (see NOTE in Step 7.1), and weigh to the nearest 0.1 mg.

7.5. Reheat the dish at 775°C for 20 to 30 min, cool in a suitable container (see NOTE in Step 7.1), and reweigh. Repeat the heating and weighing until consecutive weighings differ by not more than 0.5 mg.

8. Calculation

8.1. Calculate the weight of the ash as a percentage of the original sample as follows:

$$\% \text{ Ash} = \frac{w}{W} \times 100 \quad ,$$

where % Ash = percent ash of sample,
w = weight of ash (g), and
W = weight of sample (g).

8.2. Report the result to two significant figures and the weight of the sample taken.

9. Source Material

9.1. *ASTM Methods Manual*, "Standard Test Methods for Ash from Petroleum Products," ASTM Method D482 (American Society of Testing Materials, 1980).

CORROSIVITY OF SOLUTION TOWARD STEEL

Analyte: Corrosive anions	**Method No.:** WI610
Matrix: Waste water and waste liquids	**Detection Limit:** 0.003 mm/year
Procedure: Corrosivity of waste is determined by measuring the degree to which type SAE 1020 steel has dissolved on exposure to the waste.	**Accuracy and Precision:** unknown
Effective Date: 05/01/86	**Author:** Harold P. Patterson

SAFETY NOTE: Before beginning this procedure, read all of the Material Safety Data Sheets for the chemicals listed in Sec. 6. Read Sec. 4.3 of the EM-9 Safety Manual for information on personal protective clothing and equipment. Read Sec. 9 of this procedure and Source Material 10.2 for proper waste disposal practices.

1. Principle of Method

1.1. The corrosivity of waste water or other liquid material is determined by measuring the degree to which type SAE 1020 steel dissolves on exposure to the waste material at 55°C for a 24-h period with agitation of the liquid phase.

1.2. This procedure is not meant to provide an accurate rate of corrosion, but to determine whether the rate of corrosion is less than or greater than 6.35 mm/year.

2. Accuracy and Precision

2.1. Insufficient data available as of October 1990.

3. Interferences

3.1. Large differences in corrosion rates can occur under conditions where the metal surfaces become passivated. Therefore, at a minimum, duplicate measurements should be made.

4. Collection and Storage of Samples

4.1. Collect at least 500 mL of sample for analysis.

4.2. Collect and store samples in polyethylene bottles.

5. Apparatus

5.1. Glass kettle: 1-L with reflux condenser.

5.2. Thermometer: to reach 100°C.

5.3. Heating mantle for glass kettle.

5.4. Regulating device for heating mantle.

5.5. Glass rod support system for metal specimens.

5.6. Metal coupons: type SAE 1020 steel.

5.7. Magnetic stirrer with stirring bar.

5.8. Analytical balance: ±0.0001 g accuracy.

5.9. Measuring ruler in millimeters.

5.10. Measuring calipers in micrometer range.

5.11. Volumetric flask: 100-mL.

5.12. Beaker: 600-mL.

5.13. Stirring bars: Teflon-coated.

5.14. Stirring motor.

6. Reagents

6.1. Sodium hydroxide (20%). Add 100 g of reagent-grade sodium hydroxide to 400 mL of distilled water in a 600-mL beaker. Add a Teflon stirring bar and stir until all the sodium hydroxide has dissolved.

6.2. Zinc dust.

6.3. Hydrochloric acid (6N). While swirling, slowly add 513 mL of concentrated hydrochloric acid to a 1-L volumetric flask containing 400 mL of distilled water. Let cool and dilute to volume.

7. Procedure

7.1. Clean coupons with cleanser. Rinse well with water and dry.

7.2. Measure the surface area of the test coupon and blank coupon in mm^2.

7.3. Weigh coupons to the nearest 0.1 mg.

7.4. Place the kettle in the heating mantle. Place a stirring bar in the kettle. Fill the kettle about half full with the liquid to be tested (approximately 500 mL).

7.5. Carefully place the metal coupons on the glass supporting rack and place in the kettle. Be sure the coupons do touch each other.

7.6. Turn on the stirrer.

7.7. Place the cover on the mantle and insert the thermometer below the surface of the liquid.

7.8. Turn on the heating mantle and adjust the heat to maintain a 55°C temperature. Leave the apparatus in this condition for a 24-h period.

7.9. After 24 h have elapsed, remove the metal coupons and rinse with distilled water.

7.10. The coupons must now be cleaned free of the corroded metal before weighing. Immerse the test coupons and a blank coupon in a solution of 20% NaOH plus 200 g/L of zinc dust. Bring to a boil and let boil for 5 min. Let cool. The blank coupon should be cleaned along with the test coupons, and if any weight loss is observed it should be calculated in mg/cm^2 and subtracted from the weight lost by the test coupons.

7.11. Carefully remove the coupons from the cleaning solution with plastic tongs and rinse well with distilled water. Dry well with a paper towel.

7.12. Weigh test coupons and blank to the nearest 0.1 mg.

7.13. All samples should be run through the test solution in duplicate. A blank should be run through the cleaning solution with samples.

7.14. After each use, clean the kettle and glass supporting rack by soaking in 6 N HCl. Rinse well with distilled water and dry.

8. Calculation

8.1. Use the following formula to calculate the corrosion rate.

$$CR = \left[\left(\frac{Ws}{As}\right) - \left(\frac{Wb}{Ab}\right)\right] \times \frac{11.145}{24} \quad ,$$

where CR = corrosion rate (mm/year),
Ws = weight loss of sample (mg),
As = area of sample (cm^2),
Wb = weight loss of blank (mg),
Ab = area of blank (cm^2),
11.145 = converts weight loss to a corrosion rate in mm/year, and
24 = heating time (h).

9. Proper Waste Disposal Practices

9.1. After running analysis for corrositivity, the sample is poured back into the original container and picked up by Sample Management for disposal.

10. Source Materials

10.1. "Laboratory Corrosion Testing of Metals for the Process Industries," revision, National Association of Corrosion Engineers, NACE Standard TM-01-69 (1972).

10.2. "Chemical, Hazardous, and Mixed Waste," Administrative Requirement 10-3, in *Environment, Safety, and Health Manual*, Los Alamos National Laboratory Manual, Chapter 1 (most recent edition).

Revisions or additions to the procedure are marked (▒▒▒). Where a section heading is marked, the entire section has been revised.

EP TOXICITY EXTRACTION

Analyte: Trace metals	**Method No.:** WI620
Matrix: Sludges, solids, and RCRA wastes	
Procedure: Acetic acid extraction	
Effective Date: 03/01/85 to 01/02/92	**Author:** Mary Carol Williams

SAFETY NOTE: Before beginning this procedure, read all of the Material Safety Data Sheets for the chemicals listed in Sec. 6. Read Sec. 4.3 of the EM-9 Safety Manual for information on personal protective clothing and equipment.

1. Principle of Method

1.1. Liquid samples are pH adjusted and filtered and eight primary pollutants are determined in the filtrate by atomic absorption spectrophotometry (AAS), (Method WI100), inductively coupled plasma emission spectrometry (ICPAES), (Method EI370), or inductively coupled plasma mass spectrometry ICPMS (Method EI36).

1.2. Solid samples are extracted with water and are adjusted to pH 5.0 ± 0.2 with acetic acid to simulate environmental leaching. The solution is filtered and primary pollutants are determined in the filtrate by AAS, ICPAES, or ICPMS.

1.3. The method of standard addition is used for all metal analyses. The concentration of contaminants at the maximum concern level (MCL) for characteristic of EP toxicity are:

Contaminant	Maximum concentration (mg/L)
Arsenic	5.0
Barium	100.0
Cadmium	1.0
Chromium	5.0
Lead	5.0
Mercury	0.2

Contaminant	Maximum concentration (mg/L)
Selenium	1.0
Silver	5.0

2. Accuracy and Precision

2.1. A well characterized matrix is not available to measure either accuracy or precision. Spike recovery is variable depending on the absorptive character of the matrix.

3. Interferences

3.1. Chloride interferes causing low recoveries for Cr, As, Se, and Ag.

3.2. These extremely complex samples may have a multitude of unidentified, continuously variable interferences.

4. Handling and Storage of Samples

4.1. Preservatives must NOT be added to samples.

4.2. Handle sludges from TA-50 or TA-257 in a glove box. Handler must wear an anti-C lab coat, safety glasses, and rubber gloves. Weighing and dissolution must be completed in the glove box.

4.3. Separation procedure. Filter a waste containing unbound liquid. If the solid phase is less than 0.5% of the waste, discard the solid phase and analyze the filtrate for trace elements, pesticides, and herbicides. If the waste contains more than 0.5% solids, extract the solid phase and store the liquid phase for later use.

4.4. Structural integrity procedure/particle size reduction. Before extraction, the solid material must pass through a 9.5-mm (0.375-in.) standard sieve, have a surface area of 3.1 cm^2 per gram of waste, or, if it consists of a single piece, be subjected to the structural integrity procedure (Step 7.10). Use the structural integrity procedure to demonstrate the ability of the waste to remain intact after disposal. If the waste does not meet one of these conditions it must be ground to pass the 9.5-mm sieve.

4.5. Extraction of solid material. Extract the solid material from Step 4.4. for 24 h in an aqueous medium whose pH is maintained at or below ±0.2 using 0.5 N acetic acid. Maintain the pH either automatically or manually. (In acidifying to pH 5, no more than 4.0 mL of acid solution per g of material being extracted may be used.)

4.6. Final separation of the extraction from the remaining solid. After extraction, adjust the liquid:solid ratio to 20:1 and separate the mixed solid and extraction liquid by filtration. Discard the solid and combine the liquid with any filtrate obtained in Step 4.2. This is the EP extract that is analyzed and compared to the threshold listed in Table 1 of 40 CFR 261.24.

5. Apparatus

5.1. Glove box with balance for use with radioactive samples.

5.2. Beaker or bottle: 2000-mL, polyethylene.

5.3. Stirring bar: 1.5- by 3/8-in. magnetic, Teflon coated.

5.4. Heavy duty magnetic stirrer.

5.5. Filtering flask, 1000-mL.

5.6. Vacuum filters, Nalgene 44-0045 or Millipore XX10 047 00.

5.7. Millipore filters: AP25 042 00, AP20 042 00, AP15 042 00, and HAWP 047 00 for aqueous solutions, and AP25 042 00 and FHUP 047 00 for organic solutions.

5.8. Polyethylene bottle: 250-mL.

5.9. Hot plate.

5.10. pH controller: type 45-A, Chemtrix, Inc., Hillsboro, OR 97123 or equivalent.

6. Reagents

6.1. Distilled water.

6.2. Acetic acid (0.5 N): Dilute 30 mL of concentrated acetic acid to 1 L with distilled water.

7. Procedure

7.1. If the waste does not contain any free liquid, go to Step 7.9. If the sample is liquid or multiphase, continue as follows. Weigh filter membrane and prefilter to ±0.01 g. Handle membrane and prefilters with blunt curved-tip forceps or vacuum tweezers, or by applying suction with a pipette.

7.2. Assemble the filter holder, membranes, and prefilters following the manufacturer's instructions. Place the 0.45-μm membrane on the support screen and add prefilters in ascending order of pore size. Do not prewet the filter membrane.

7.3. Weigh out a representative subsample of the waste (100 g minimum).

7.4. Allow slurries to stand to permit the solid phase to settle. Wastes that settle slowly may be centrifuged before filtration.

7.5. Wet the filter with a small portion of the liquid phase of the waste or extraction mixture. Transfer the remaining material to the filter holder and apply vacuum or gentle pressure (10-15 psi) until all liquid passes through the filter. Stop filtration when air or pressurizing gas moves through the membrane. If this point is not reached under vacuum or gentle pressure, slowly increase the pressure in 10-psi increments to 75 psi. Halt filtration when liquid flow stops. This liquid will constitute part or all of the extract (refer to Step 7.16). Refrigerate the liquid until time of analysis.

NOTE: Oil samples or samples that contain oil are treated in exactly the same way as any other sample. Filter the liquid portion of the sample and treat as part of the EP extract. If the liquid portion of the sample will not filter (this is usually the case with heavy oils or greases) carry it through the EP extraction as a solid.

7.6. Remove the solid phase and filter media and, while not allowing it to dry, weigh to ±0.01 g. Determine the wet weight of the residue by calculating the weight difference between the weight of the filters (Step 7.1) and the weight of the solid phase and the filter media.

7.7. The waste will be handled differently from this point depending on whether it contains more or less than 0.5% solids. If the sample appears to have less than 0.5% solids, determine the percent solids by the following procedure.

7.7.1. Dry the filter and residue at 80°C until two successive weighings yield the same value.

7.7.2. Calculate the percent solids using the following equation:

$$\frac{W_{sf} - W_f}{W_i} \times 100 = \%\ \text{solid}$$

where W_{sf} = weight of filtered solid and filters,
W_f = tared weight of filters, and
W_i = initial weight of waste material.

NOTE: This procedure is used only to determine whether the solid must be extracted or whether it can be discarded unextracted. It is not used in calculating the amount of water or acid to use in the extraction step. Do not extract solid material that has been dried at 80°C. A new sample

will have to be used for extraction if a percent solids determination is performed.

7.8. If the solid comprises less than 0.5% of the waste, discard the solid and proceed immediately to Step 7.17, treating the liquid phase as the extract.

7.9. Evaluate the solid material obtained from Step 7.5 and all materials that do not contain free liquids for particle size.

7.9.1. If the solid material has a surface area equal to or greater than 3.1 cm^2 per gram of material or passes through a 9.5-mm (0.375-in.) standard sieve, proceed to Step 7.11.

7.9.2. If the surface area is smaller or the particle size larger than specified above, prepare the solid material for extraction by crushing, cutting, or grinding the material so that it passes through a 9.5-mm (0.375-in.) sieve or, if the material is in a single piece, by subjecting the material to the structural integrity procedure described in Step 7.10.

7.10. Structural integrity procedure (SIP).

7.10.1. Cut a 3.3-cm-diam by 7.1-cm-long cylinder from the waste material. For wastes that have been treated using a fixation process, the waste may be cast in the form of a cylinder and allowed to cure for 30 d before testing.

7.10.2. Place waste in the sample holder and assemble the tester. Raise the hammer to its maximum height and drop. Repeat 14 additional times.

7.10.3. Remove solid material from tester and scrape off any particles adhering to sample holder. Weigh the waste to the nearest 0.01 g and transfer it to the extractor.

7.11. If the sample contains more than 0.5% solids, use the wet weight of the solid phase obtained in Step 7.6 for purposes of calculating the amount of liquid and acid to employ for extraction by using the following equation:

$$W = W_{sf} - W_f$$

where W = wet weight of solid to be charged to extractor (g),
W_{sf} = wet weight of filtered solids and filter media (g), and
W_f = weight of tared filters (g).

If the waste does not contain any free liquids, 100 g of the material will be subjected to the extraction procedure.

7.12. Place the appropriate amount of material but not less than 100 g (refer to Step 7.11) into the extractor and add 16 times its weight of deionized water.

7.13. After the solid material and deionized water are placed in the extractor, begin agitation and measure the pH of the solution in the extractor. If the pH is >5.0, decrease the pH of the solution to 5.0 ± 0.2 by adding 0.5 N acetic acid. If the pH is equal to or <5.0, do not add acetic acid. The pH of the solution should be monitored, as described below, during the course of the extraction and, if the pH rises above 5.2, add 0.5 N acetic acid to bring the pH down to 5.0 ± 0.2. However, in no event shall the aggregate amount of acid added to the solution exceed 4 mL of acid per gram of solid. Agitate the mixture for 24 h and maintain at 20-40°C (68-104°F) during this time. Monitor and adjust the pH during the course of the extraction with a device such as the Chemtrix Type 45-A pH Controller in conjunction with a metering pump and reservoir of 0.5 N acetic acid. If such a system is not available, use the following manual procedure.

7.13.1. Calibrate a pH meter in accordance with the manufacturer's specifications.

7.13.2. Check the pH of the solution and, if necessary, manually add 0.5 N acetic acid to the extractor until the pH reaches 5.0 ± 0.2. Adjust the pH of the solution at 15-, 30-, and 60-min intervals, moving to the next longer interval if the pH does not have to be adjusted more than 0.5 pH units. The amount of acid should never exceed 4 mL per gram of solid.

7.13.3. Continue the adjustment procedure for at least 6 h.

7.13.4. If, at the end of the 24-h extraction period, the pH of the solution is not below 5.2 and the maximum amount of acid (4 mL per gram of solids) has not been added, adjust the pH to 5.0 ± 0.2 and continue the extraction for an additional 4 h, adjusting the pH at 1-h intervals.

7.14. At the end of the extraction period, add deionized water to the extractor in an amount determined by the following equation:

$$V = (20)(W) - 16(W) - A$$

where V = deionized water to be added (mL),
W = weight of solid charged to extractor (g), and
A = amount of 0.5 N acetic acid added during extraction (mL).

7.15. Separate the material in the extractor into its component liquid and solid phases in the following manner.

7.15.1. Allow slurries to stand to permit the solid phase to settle and set up the filter apparatus. Wastes that are slow to settle may be centrifuged before filtration.

7.15.2. Using standard radiochemical safety procedures, wet the filter with a small portion of the liquid phase from the waste or extraction mixture. Transfer the remaining material to the filter holder and apply vacuum or gentle pressure (10-15 psi) until all liquid passes through the filter. Stop filtration when air or pressurizing gas moves through the membrane. If this point is not reached under vacuum or gentle pressure, slowly increase the pressure in 10-psi increments to 75 psi. Halt filtration when liquid flow stops.

7.16. The liquids resulting from Steps 7.5 and 7.15 should be combined. The combined liquid (or the waste itself if it has less than 0.5% solids, as noted in Step 7.8) is the extract and should be analyzed for the presence of any of the contaminants specified in the table in Step 1.3 by AAS, ICPAES, or ICPMS. Refrigerate the sample until it is to be digested with acid. The mercury aliquot should be digested immediately and other metals as soon as possible.

8. Calculations

8.1. If the EP extract includes two phases, concentration of contaminants is determined by using a simple weighted average. For example: An EP extract contains 50 mL of oil and 1000 mL of an aqueous phase. Contaminant concentrations are determined for each phase. The final contamination concentration is taken to be:

$$C_f = \frac{V_o \times C_o}{V_o + V_a} + \frac{V_a \times C_a}{V_o + V_a}$$

where C_f = final contamination concentration (mg/L),
V_o = volume of oil (50 mL),
C_o = contaminant concentration in oil (mg),
V_a = volume of aqueous phase (mL), and
C_a = contaminant concentration of aqueous phase (mg).

Chromium concentrations have to be interpreted differently. A waste containing chromium will be determined to be EP toxic if: (1) the waste extract has an initial pH of less than 7 and contains more than 5 mg/L of hexavalent chromium in the resulting extract, or (2) the waste extract has an initial pH greater than 7 and a final pH greater than 7 and contains more than 5 mg/L of hexavalent chromium in the extract, or (3) the waste extract has an initial pH greater than 7 and a final pH less than 7 and contains more than 5 mg/L of total chromium, unless the chromium is trivalent. To determine whether the chromium is trivalent, the sample must be processed according to an alkaline digestion method (Method 3060) and analyzed for hexavalent chromium (Methods 7195, 7196, or 7197). Refer to the SW-846 manual.

8.2. Calculation for standard additions:

$$C = \frac{D \times R \times C_s}{R_s - R}$$

where C = concentration of unknown,
D = dilution of both standard and unknown (must be the same for each),
R = reading of unknown,
C_s = concentration of standard added, and
R_s = reading of unknown plus standard.

9. Source Material

9.1. U.S. Environmental Protection Agency, "Test Methods for Evaluating Solid Waste," SW-846, Office of Solid Waste and Emergency Response, Washington, DC (1982).

FLASH POINT — PENSKY-MARTENS CLOSED CUP TESTER

Analyte: Flammable organics	**Method No.:** WI630
Matrix: Fuels, oils, solid suspensions, and other liquids	**Range:** Room temperature to 230°F
	Accuracy: 100.7% for 1-Hexanol
Procedure: The temperature in °F at which the vapor above a fluid substance flashes on application of a flame is determined in a Pensky-Martens apparatus.	**Precision:** ± 2.4% RSD
Effective Date: 05/01/86	**Author:** Harold P. Patterson

SAFETY NOTE: Before beginning this procedure, read all of the Material Safety Data Sheets for the chemicals listed in Sec. 6. Read Sec. 4.3 of the EM-9 Safety Manual for information on personal protective clothing and equipment.

1. Principle of Method

1.1. The sample is heated slowly in a closed cup with constant stirring. A small flame is directed into the vapor phase above the cup at 2°F intervals. The flash point is the lowest temperature at which the vapor ignites when the flame is applied (see Source Material 9.1).

2. Accuracy and Precision

2.1. The flash point of 1-Hexanol was determined 29 times over a period of 6 months. The mean was 146.1°F and the standard deviation was ±3.5°F at the 1σ level. The flash point value for 1-Hexanol in Langes Handbook of Chemistry, 8th Ed., is 145°F.

3. Interferences

3.1. A halo or enlarged flame must be distinguished from the actual flame that flashes in the cup.

4. Collection and Storage of Samples

4.1. Collect at least 250 mL of sample.

4.2. Collect samples in glass bottles.

5. Apparatus

5.1. Pensky-Martens closed cup flash point tester: VWR Scientific, Los Alamos, New Mexico.

5.2. Electric stirring motor.

5.3. Thermometer: for flash point apparatus, to measure to 230°F.

5.4. Rubber tubing: 1/4-in.-i.d., for burner.

5.5. Safety matches.

5.6. Rubber gloves.

5.7. Safety fire extinguisher: KIDDE, multipurpose, dry chemical.

6. Calibration Standards

6.1. 1-Hexanol. Chemically pure with a closed cup flash point of 145°F.

7. Procedure

7.1. Perform the test in a draft-free compartment. This can be accomplished by surrounding the apparatus with a plastic safety shield in a well-ventilated hood.

7.2. Thoroughly dry the cup and stirrer before testing.

7.3. For safety, wear rubber gloves when handling samples and opening bottles. Transfer samples in a well-ventilated hood. Fill the cup with the sample to be tested to the filling mark indicated on the cup. Place the cup in the heater.

7.4. Place the lid on the cup and secure it in place.

7.5. Attach the stirrer to the apparatus.

7.6. Insert the thermometer.

7.7. Light the test flame and adjust to a height of approximately 1/8 in.

7.8. Turn on the stirrer at the lower speed.

7.9. Stop the stirrer after 1 min. Introduce the flame into the vapor space of the test chamber by twisting the spring-loaded knob of the flame mechanism. Hold the knob for 1 s and then release it to let the spring mechanism return to its original position.

CAUTION: Never have the stirrer on while introducing flame into the test chamber.

There should be a distinctive flash within the chamber itself. It may be necessary to turn off the room lights to see the flash. Do not confuse the true flash point with the bluish halo that sometimes forms around the test flame at application. If the sample flashes at room temperature, record the flash point as less than room temperature in °F.

7.10. If the sample does not flash at room temperature, turn on the sample heater at the **ON-OFF** switch in the multiple outlet bar. The heating apparatus should be set at **45** on the dial and taped in place to prevent accidental overheating of the sample. This gives a heating rate of about 6°F/min.

7.11. Apply the flame to the test chamber at 2°F intervals, after stopping the stirrer. Record the temperature in °F when the first flash is observed.

7.12. If the sample does not flash at a low temperature, continue heating to a maximum of 160°F. If the sample still doesn't flash at 160°F record the flash point as greater than 160°F.

7.13. Be sure to shut off the sample heater at the multiple outlet bar to cool down the sample after the flash point has been observed or 160°F has been reached, whichever occurs first, to prevent overheating the sample and causing a possible fire in the sample cup.

7.14. Dispose of the sample in the properly marked waste container and place towels used for cleaning in the designated container.

7.15. Include 10% duplicates with each sample set.

7.16. Run 1-Hexanol as the standard. A corrected flash point of 145°F ± 4°F should be obtained for the standard (see Source Material 9.1 and 9.2).

8. Calculations

8.1. Call EM-8 (7-7049) for the ambient barometric pressure in mm Hg.

8.2. The observed flash point is corrected to a barometric pressure of 760 mm Hg.

$$Fc = F + [0.06\ (760 - P)] \quad ,$$

where Fc = corrected flash point (°F),
F = observed flash point (°F), and
P = ambient barometric pressure (mm Hg).

8.3. Report the observed flash point. Report the corrected flash point only if requested.

9. Source Materials

9.1. *ASTM Methods Manual*, "Standard Test Methods for Pensky-Martens Closed Tester," ASTM Designation: D93-80 (American Society of Testing Materials, 1980).

9.2. *Langes Handbook of Chemistry*, 8th ed. (McGraw-Hill Book Company, New York, New York, 1952), p. 41.

HEAT CAPACITY OF COMBUSTIBLE MATERIALS

Analyte: Flammable organics	**Method No.:** WI640
Matrix: Fuels, oils, organic liquids	**Range:** 10 - 25,000 Btu/lb
Procedure: The amount of heat generated when a combustible material burns in an oxygen atmosphere is measured in Btu/lb of sample.	**Accuracy and Precision:** 100% ± 0.4% **Detection Limit:** 1 ± 1 Btu/lb
Effective Date: 11/04/86	**Author:** Harold P. Patterson

SAFTEY NOTE: Before beginning this procedure, read all of the Material Safety Data Sheets for the chemicals listed in Sec. 6. Read Sec. 4.3 of the EM-9 Safety Manual for information on personal protective clothing and equipment.

1. Principle of Method

1.1. Combustible materials to be tested are burned under controlled conditions in an oxygen atmosphere in a Parr oxygen bomb. The amount of heat generated in the bomb is collected and measured in an adiabatic calorimeter. The amount of heat generated is calculated in units of Btu/lb of sample. The instrument used is a Parr 1241 adiabatic oxygen bomb calorimeter.

2. Accuracy and Precision

2.1. Pure benzoic acid tablets provided by the Parr Instument Co. are used as quality control standards. Over a 3-y period these samples gave a mean value of 11,377 ± 45 Btu/lb at the 1σ level. The true value of the benzoic acid is 11,372 Btu/lb.

2.2. A limit of detection was determined to be 1 ± 1 Btu/lb based on a 1-g sample, the ability to read to 0.005°F, and a minimum detectable parameter of 0.1 mL alkali, 0.01% sulfur, and 5 cm of fuse wire.

3. Interference

3.1. The calorimeter must be adjusted initially so that there is uniform cycling of hot and cold water additions and there is no difference observed between the bucket and jacket temperature. A tight seal must be maintained on the sample bomb during the operation.

3.2. Occasionally a bomb will misfire resulting in zero combustion or the evidence of poor combustion (carbon or soot) will be seen. See the Parr Instruction Manual for the 1241 adiabatic oxygen bomb calorimeter (Source Material 10.1, pp. 16-17) for cause and corrections.

4. Sample Handling

4.1. Quickly weigh volatile samples and transfer them to the sample bomb. If samples are extremely volatile it may be necessary to weigh the sample in a gelatin capsule.

4.2. Samples high in sulfur or containing over 20 mg of chlorine can corrode the sample bomb. Use smaller samples in these cases.

5. Apparatus

5.1. Parr 1241 adiabatic oxygen bomb calorimeter: equipped with a bucket and jacket thermometer, thermistor probes, and a remote firing switch. Parr Instrument Co., VWR Scientific, Los Alamos, New Mexico.

5.2. Thermometer vibrator.

5.3. Parr 1541 water heater: Parr Instrument Co., VWR Scientific, Los Alamos, New Mexico.

5.4. Parr 1551 water cooler: Parr Instrument Co., VWR Scientific, Los Alamos, New Mexico.

5.5. Parr 1108 oxygen bomb: Parr Instrument Co., VWR Scientific, Los Alamos, New Mexico.

5.6. Parr 45C10 nickel-chrome alloy fuse wire: Parr Instrument Co., VWR Scientific, Los Alamos, New Mexico.

5.7. Sample cups: stainless steel.

5.8. Parr 1825 filling connector for O_2 cylinder and bomb: Parr Instrument Co., VWR Scientific, Los Alamos, New Mexico.

5.9. Bomb head support stand.

5.10. Thermometer reading lens.

5.11. Balance: capable of weighing 2000 ± 0.5 g.

5.12. Analytical balance.

5.13. Parr 2811 pellet press: Parr Instrument Co., VWR Scientific, Los Alamos, New Mexico.

5.14. Tweezers.

5.15. Metric ruler.

5.16. Burette: 25-mL with clamp and stand.

5.17. Stirring bars: Teflon.

5.18. Electric stirrer.

5.19. Muffle furnace.

5.20. Combustion capsules: Parr Instrument Co., VWR Scientific, Los Alamos, New Mexico.

6. Reagents

6.1. Oxygen cylinder. Los Alamos National Laboratory Gas Plant.

6.2. Sodium cabonate (0.0725 N). Dissolve 3.84 g of Na_2CO_3 in distilled water and dilute to 1 L. VWR Scientific, Los Alamos, New Mexico.

6.3. Benzoic acid. Available from Parr in pelletized form. VWR Scientific, Los Alamos, New Mexico.

6.4. Methyl orange indicator. Dissolve 0.1 g in distilled water and dilute to 100 mL with distilled water. VWR Scientific, Los Alamos, New Mexico.

7. Calibration and Standards

7.1. The energy equivalent factor (W) of the calorimeter for our setup was initially determined in calories per °C. The energy equivalent of the calorimeter is the energy required to raise the temperature one degree, expressed as calories per °C. The value obtained was 2441 calories per °C. Parr furnishes a certificate for this factor but recommends that users determine the factor for their own laboratories. The test is run with a pellet of weighed calorific-grade benzoic acid exactly the way a sample is run (see Section 8).

7.2. The instrument is calibrated each day with a weighed pellet of calorific-grade benzoic acid. The value should be 11,372 ± 568 Btu/lb for benzoic acid.

8. Procedure

8.1. Turn on the power to the water cooler and let cool for 15 min.

8.2. Turn on the water heater. Make sure there is water in the heater before turning on the power. Let the water heater warm up for 15 min.

8.3. Weigh 1 ± 0.1 g of sample in a sample cup. It may be necessary to weigh very volatile samples in gelatin capsules. If the sulfur content and Btu values of the gelatin capsules are not known, run them through the method so they can be subtracted from the actual sample.

8.4. Carefully place the sample cup onto the loop of the bomb head, which should be in the support stand.

8.5. Attach a 10-cm length of fuse wire to the bomb head terminals and bend the fuse wire to just touch the surface of the sample or capsule.

8.6. Add 1 mL of double-deionized water to the bottom of the combustion bomb.

8.7. Carefully place the bomb head in the bomb, being careful not to spill the sample if it is in liquid form.

8.8. Screw the top of bomb on hand tight. Be careful not to spill the sample.

8.9. Pressurize the bomb with oxygen. Use the special Parr 1825 filling connector. Place the quick disconnect end of the oxygen connector snugly onto the bomb fitting and pressurize the bomb slowly to a pressure of 30 atmospheres.

CAUTION: *Never fill above 40 atmospheres.*

If the bomb is filled above 40 atmospheres, shut off the main valve to the oxygen cylinder and slowly depressurize the bomb at the relief valve. Reweigh the sample before proceeding.

8.10. Fill the calorimeter bucket with 2000 ± 0.5 g of distilled water. The water should be as close to 24°C as possible so that a reading can be obtained on the thermometer in the calorimeter bucket. Place the bucket in the calorimeter.

8.11. Attach the special lifting handle to the bomb. Attach the two ignition wires to the bucket. Carefully lower the bomb into the bucket. Remove the lifting handle and shake any drops of water back into the bucket. Check to ensure that the bomb is not leaking O_2. If the bomb is leaking, remove it from the calorimeter, vent it, and correct the problem by reseating the bomb head or by replacing the O-ring. Reweigh the sample if necessary.

8.12. Close the calorimeter cover. Lower the thermometer bracket and turn on the power switch to start the calorimeter.

8.13. Let the calorimeter run 5-10 min while the controller brings the jacket temperature up to equilibrium with the bucket.

8.14. After the temperature has equilibrated, vibrate the thermometer and read the bucket temperature to 0.001°C. This is the initial startup temperature. Correct the temperature reading by using the graph supplied with the thermometer.

8.15. Stand back from the calorimeter and fire the bomb. Use the remote firing switch. Press the ignition button, holding it down until the indicator light goes out. Do not hold the button longer than 5 s.

8.16. The bucket temperature will usually start to rise in 20 s if the sample has fired. The rise in temperature is rapid at first. After 6 min, vibrate the thermometer and take a reading every minute thereafter. When the temperature has reached a stable maximum (three sucessive readings giving the same value) record this temperature as the final temperature. The temperature should be read to ± 0.001°C. Correct the final temperature reading using the graph supplied with the thermometer.

8.17. Shut off the calorimeter power switch and swing the cover aside. Disconnect the ignition wires and lift the bucket containing the bomb out of the calorimeter.

8.18. Remove the bomb from the bucket and wipe off excess water. Mount the bucket in the bomb bench clamp. Slowly open the knurled knob of the bomb head to release all pressure in the bomb before opening.

8.19. After all pressure has been released from the bomb, unscrew the cap. Lift the bomb head off and place it on the support stand. Examine the bomb. If soot is present, the test should be repeated using a smaller sample.

8.20. Wash all the interior surfaces of the bomb and bomb head with a minimum amount of deionized water. Catch washings in a beaker. Transfer washings to a 50-mL volumetric flask and dilute to volume with deionized water. Set aside for sulfate analysis and acid titration.

8.21. Remove all unburned pieces of fuse wire from the bomb head. Straighten the wire and measure. Subtract this measurement from the original length of 10 cm to get the length of wire consumed in the sample run.

8.22. Determine the acid formed during burning by titrating a portion of the bomb washings in the 50-mL volumetric flask. Titrate a 10-mL portion with 0.0725 N Na_2CO_3 using methyl orange as the indicator. Color change is from pink to yellow.

8.23. Determine the sulfur content of the bomb washings in the 50-mL volumetric flask by flow injection, Method No. WI350.

9. Calculations

9.1. The heat capacity is calculated in Btu/lb of sample by an in-house computer program on the IBM-PC. The following values are needed:

- corrected temperature at time of firing in °C,
- corrected final temperature in °C,
- mL of standard alkali used,
- sulfur (%),
- fuse wire consumed (cm),
- mass of sample (g),
- type **C** if sample is coal,
- type **L** if sample is liquid hydrocarbon, and
- energy equivalent factor (W) for bomb = 2441 cal/°C.

9.2. To begin the program at C:\> type **CD\BTUCHN** and press Enter, **BASICA** and Enter, **RUN HEATCAP** and Enter. The program is now in place. Use values from Step 9.1 to run the program. Press **CTRL-PRINT SCREEN** to get hard copy of the information.

9.3. An example of a typical calculation follows.

misc 86.03544(R)
corrected temperature at time of firing? **24.857**
corrected final temperature? **29.474**
mL of standard alkali used? **16.75**
% sulfur? **0**
cm of fuse wire consumed? **8.1**
mass of sample in grams? **0.9923**
type **C** if sample is coal?
or type **L** if sample is liquid hydrocarbon? **L**

misc 86.03544(R)
gross heat of combustion, BTU/LB: **20379.41**
uncertainty, BTU/LB: **31.49429**

type sample and log number
or type **none** if completed?

To exit the program type **SYSTEM** and Enter, then **CD**.

9.4. If the computer program is not available, use the following formula for calculation:

$$\text{HEAT CAPCITY} = \frac{((W \times t) - e_1 - e_2 - e_3)\ 1.8}{m} = \text{Btu/lb} \quad ,$$

where W = energy equivalent factor for our Parr Bomb = 2441 cal/°C,
t = Corrected Final Temp - Corrected Initial Temp,
e_1 = standard alkali used (mL) if 0.0725 N alkali was used,
e_2 = 14 × (%S in sample) × (sample weight in g) = the correction in calories for the heat of formation of sulfuric acid,
e_3 = 2.3 × cm of fuse wire consumed = the correction in calories for heat of combustion of the Ni-Cr wire used, and
m = weight of the sample (g).

10. Source Materials

10.1. *Manual No. 153: 1241 Adiabatic Oxygen Bomb Calorimeter* (Parr Instrument Co., 211 53rd Street, Moline, Illinois 61265, 1978).

10.2. *ASTM Methods Manual*, ANSI/ASTM Method D2012, "Method For Coal and Solid Fuels" (American Society of Testing Materials, 1980).

10.3. *ASTM Methods Manual*, ANSI/ASTM Method D240-76, "Method For Liquid Hydrocarbons" (American Society of Testing Materials, 1980).

INORGANIC TOXICITY CHARACTERISTIC LEACHING PROCEDURE (TCLP)

Analyte: Trace metals	**Method No.:** WI650
Matrix: Sludges, soils, and RCRA wastes	
Procedure: Acid leach to extract metals	
Effective Date: 04/01/87	**Author:** Mary Carol Williams

SAFETY NOTE: Before beginning this procedure, read all of the Material Safety Data Sheets for the chemicals listed in Sec. 6. Read Sec. 4.3 of the EM-9 Safety Manual for information on personal protective clothing and equipment. Read Sec. 10 of this procedure and Source Materials 11.3 and 11.4 for proper waste disposal practices.

1. Principle of Method

1.1. The Toxicity Characteristic Leaching Procedure (TCLP) is designed to determine the mobility of inorganic contaminants present in liquid, solid, and multiphasic wastes.

1.2. For liquid wastes (i.e., those containing <0.5% solid material), the waste, after filtration through a 0.6- to 0.8-μm glass-fiber filter, is defined as the TCLP extract.

1.3. For solid wastes or wastes containing significant amounts of solid material, the particle size of the waste is reduced (if necessary), the liquid phase, if any, is separated from the solid phase and stored at 4°C for later analysis. The solid phase is extracted with 20 times its weight of extraction fluid. The choice of extraction fluid employed depends on the alkalinity of the solid phase of the waste. Following extraction, the liquid extract is separated from the solid phase by filtration through a 0.6- to 0.8-μm glass-fiber filter.

1.4. If a total analysis of the waste demonstrates that individual contaminants are not present, or that they are present at such low concentrations that the appropriate regulatory thresholds could not possibly be exceeded, the TCLP need not be run.

1.5. If compatible (i.e., multiple phases will not form on combination), the initial liquid phase of the waste and the liquid extract are combined and analyzed. If incompatible, the liquids are analyzed separately and the results are mathematically combined to yield a volume-weighted average concentration.

1.6. The method of standard addition should be employed for all metal analyses. The maximum concentration of contaminants for characteristic of toxicity are:

EPA Hazardous Waste Number	Contaminant	Maximum Concentration (mg/L)
D004	Arsenic	5.0
D005	Barium	100.0
D006	Cadmium	1.0
D007	Chromium	5.0
D008	Lead	5.0
D009	Mercury	0.2
D010	Selenium	1.0
D011	Silver	5.0

2. Accuracy and Precision

2.1. A well characterized matrix is not available to measure either accuracy or precision. Spike recovery is variable depending on the absorptive characteristics of the matrix.

3. Interferences

3.1. Chloride interferes, causing low recoveries for Cr, As, Se, and Ag.

3.2. Samples can be extremely complex and can have a multitude of unidentified, continuously variable interferences.

4. Handling and Storage of Samples

4.1. Preservatives must NOT be added to samples.

4.2. Sludges from TA-50 or TA-57 must be handled in a glove box. The handler must wear an anti-C lab coat, safety glasses, and rubber gloves. Weighing and dissolution must be completed in a glove box.

4.3. TCLP extracts should be preserved with nitric acid at a pH <2, prepared for analysis, and analyzed as soon as possible following extraction.

5. Apparatus

5.1. Glove box: with balance, for use with radioactive samples, if necessary.

5.2. Extraction vessel: 2-L bottle, borosilicate glass or plastic (metals only).

5.3. Magnetic stirring bar: 1.5- by 0.375-in., Teflon-coated.

5.4. Magnetic stirrer: heavy duty.

5.5. Agitation apparatus: capable of rotating the extraction vessel end over end at 30 ± 2 rpm. Associated Design and Manufacturing Company, Alexandria, Virginia.

5.6. Filter holder: 47-mm, XX10 047 00, Millipore Corp., Bedford, Massachusetts.

5.7. Vacuum filters: Nalgene (44-0045) or Millipore (XX10 047 00).

5.8. Millipore filters: AP25 042 00, AP20 042 00, AP15 042 00, and HAWP 047 00 for aqueous solutions, and AP25 042 00 and FHUP 047 00 for organic solutions.

5.9. Filter media: 0.7-μm, Whatman GFF, Whatman Laboratory Products, Clifton, New Jersey.

5.10. Polyethylene bottle: 250-mL.

5.11. pH meter: calibrated in accordance with manufacturer's specifications.

5.12. Hot plate.

5.13. Laboratory balance: any balance accurate to ±0.01 g.

6. Reagents

6.1. Reagent water. Reagent water is defined as water in which an interferant is not observed at or above the method detection limit for the analyte(s) of interest. For nonvolatile extractions, ASTM Type II water or equivalent meets the definition of reagent water.

6.2. Hydrochloric acid (1.0 N): prepare from ACS reagent grade (87 mL/L).

6.3. Nitric acid (1.0 N): prepare from ACS reagent grade (60 mL/L).

6.4. Sodium hydroxide (10 N): Banco Standardized IC#65550.

6.5. Acetic acid: glacial, ACS reagent grade.

6.6. Extraction fluid no. 1: prepare by adding 11.4 mL of glacial acetic acid to 1975 mL of the appropriate water (see Step 6.1). Add 12.9 mL of 10 N NaOH. When correctly prepared, the pH of this fluid is 4.93 ± 0.05.

6.7. Extraction fluid no. 2: prepare by adding 11.4 mL of glacial acetic acid to 1989 mL of Type II water (see Step 6.1). When correctly prepared, the pH of this fluid is 2.88 ± 0.05.

NOTE: These extraction fluids should be monitored frequently for impurities. The pH should be checked before use to ensure that these fluids were accurately prepared.

6.8. Metal standards (1000 mg/L): Fisher Scientific. See individual metal procedures.

6.9. Nitric acid: (concentrated, reagent grade).

6.10. Nitric acid (1%): dilute 10 mL of concentrated nitric acid to 1000 mL with distilled, deionized water.

6.11. Spike solution: use 1000 mg/L metal standards in the nitrate or oxide form. Add 10 mL of Ag, 5 mL each of As, Cr, Pb, and Se, 1 mL of Cd, and 100 mL of Ba. Add standard solutions to approximately 100 mL 1% HNO_3. Dilute to 1000 mL with 1% HNO_3. Do not use HCl solutions, which will precipitate silver.

Element	Spike solution concentration (mg/L)	Spiked sample concentration (mg/L)
As	5	0.1
Cd	1	0.02
Cr	5	0.1
Pb	5	0.1
Se	5	0.1
Ag	5	0.1
Ba	100	10.0

7. Procedure

7.1. The preliminary TCLP evaluations are performed on a minimum of 100-g representative samples of waste that will not actually undergo TCLP extraction. These evaluations include preliminary determination of the percent solids of the waste; determination of whether the waste contains insignificant solids and is therefore its own extract after filtration; determination of whether the solid portion of the waste requires particle-size reduction; and determination of which extraction fluid is to be used for the nonvolatile TCLP extraction of the waste.

7.2. Preliminary determination of percent solids. Percent solids is defined as that fraction of a waste sample (as a percentage of the total sample) from which no liquid can be forced by applied pressure, as described below.

7.2.1. If the waste will obviously yield no free liquid when subjected to pressure filtration (i.e., is 100% solids), proceed to Step 7.5.

7.2.2. If the sample is liquid or multiphasic, liquid/solid separation to make a preliminary determination of percent solids is required. This involves the filtration device described in Steps 5.6-5.9 and is outlined in Steps 7.2.3-7.2.9.

7.2.3. Weigh the filter and the container that will receive the filtrate.

7.2.4. Assemble the filter holder and filter following the manufacturer's instructions. Place the filter on the support screen and secure.

7.2.5. Weigh out a representative subsample of the waste (100-g minimum) and record the weight.

7.2.6. Allow slurries to stand to permit the solid phase to settle. Wastes that settle slowly may be centrifuged before filtration. Centrifugation is to be used only as an aid to filtration. If centrifugation is used, the liquid should be decanted and filtered and the solid portion of the waste filtered through the same filtration system.

7.2.7. Quantitatively transfer the waste sample to the filter holder (liquid and solid phases). If filtration of the waste at 4°C reduces the amount of expressed liquid below what would be expressed at room temperature, allow the sample to warm up to room temperature in the device before filtering.

NOTE: If waste material (>1% of original sample weight) has obviously adhered to the container used to transfer the sample to the filtration apparatus, determine the weight of this residue and subtract it from the sample weight determined in Step 7.2.5 to determine the weight of the waste sample that will be filtered.

Gradually apply vacuum or gentle pressure (1-10 psi) until air or pressurizing gas moves through the filter. If this point is not reached under 10 psi, and if no additional liquid has passed through the filter in any 2-min interval, slowly increase the pressure in 10-psi increments to a maximum of 50 psi. After each incremental increase of 10-psi, if the pressurizing gas has not moved through the filter, and if no additional liquid has passed through the filter in any 2-min interval, proceed to the next 10-psi increment. When the pressurizing gas begins to move through the filter, or when liquid flow has ceased at 50 psi (i.e.,

filtration does not produce any additional filtrate within any 2-min period), filtration is stopped.

NOTE: Instantaneous application of high pressure can degrade the glass fiber filter and may cause premature plugging.

7.2.8. The material in the filter holder is defined as the solid phase of the waste and the filtrate is defined as the liquid phase.

NOTE: Some wastes, such as oily wastes and some paint wastes, will obviously contain some material that appears to be a liquid. But even after applying vacuum or pressure filtration, as outlined in Step 7.2.7, this material may not filter. If this is the case, the material in the filtration device is defined as a solid. The original filter is **NOT** to be replaced with a fresh filter under any circumstances. Only one filter is to be used.

7.2.9. Determine the weight of the liquid phase by subtracting the weight of the filtrate container (see Step 7.2.3) from the total weight of the filtrate-filled container. The weight of the solid phase of the waste sample is determined by subtracting the weight of the liquid phase from the weight of the total waste sample, as determined in Step 7.2.5.

7.2.10. Record the weight of the liquid and solid phases. Calculate the percent solids as follows:

$$\%S = \frac{W_S \times 100}{W_T} ,$$

where $\%S$ = percent solids,
W_S = weight of solid, and
W_T = total weight of waste.

7.3. Determination of whether waste is liquid or has insignificant amounts of solid material. If the sample obviously has a significant amount of solid material, the solid phase must be extracted. Proceed to Step 7.4 to determine if the waste requires particle-size reduction, and to reduce particle size if necessary. Determine whether the waste is liquid or has insignificant amounts of solid material, which need not undergo extraction, as follows:

7.3.1. Remove the solid phase and filter from the filtration apparatus.

7.3.2. Dry the filter and solid phase at 100 ± 20°C until two successive weighings yield the same value within ±1%. Record the final weight.

NOTE: Caution should be taken to insure that the solid will not flash upon heating. It is recommended that the drying oven be vented to a hood or appropriate device.

7.3.3. Calculate the percent dry solids as follows:

$$\%D_s = \frac{(W_{wf} - W_f) \times 100}{W_i} ,$$

where: $\%D_s$ = percent dry solids,
W_{wf} = weight of dry waste and filter,
W_f = tared weight of filter, and
W_i = initial weight of sample.

7.3.4. If the percent dry solids is less than 0.5%, the waste after filtration is defined as the TCLP extract. If the percent dry solids is greater than or equal to 0.5% and TCLP is to be performed, return to the beginning of this section (Step 7.1) with a new representative waste sample, so that it can be determined if particle-size reduction is necessary (Step 7.4) and so that the appropriate extraction fluid may be determined (Step 7.5) on a fresh portion of the solid phase of the waste.

7.4. Determination of whether the wastes require particle-size reduction (particle size is reduced during this step). Using the solid portion of the waste, evaluate the solid for particle size. If the solid has a surface area per gram ≥ 3.1 cm^2, or is less than 1 cm in its smallest dimension (i.e., is capable of passing through a 9.5-mm [0.375-in.] standard sieve), particle-size reduction is not required (proceed to Step 7.5). If the surface area is smaller or the particle size larger than described above, the solid portion of the waste is prepared for extraction by crushing, cutting, or grinding the waste to a surface area or particle size as described above.

7.5. Determination of appropriate extraction fluid. If the solid content is $\geq 0.5\%$ of the waste and if TCLP extraction for nonvolatile constituents is to be done (Section 8), determine the appropriate fluid (Steps 6.6-6.7) to use for the nonvolatiles extraction as follows.

7.5.1. Weigh out a small subsample of the solid phase of the waste, reduce the particle size (if necessary) to approximately 1-mm-diam or less, and transfer 5.0 g of the solid phase of the waste to a 500-mL beaker or Erlenmeyer flask.

7.5.2. Add 96.5 mL of reagent water (ASTM Type II) to the beaker, cover with a watch glass, and stir vigorously for 5 min with a magnetic stirrer.

Measure and record the pH. If the pH is <5.0, extraction fluid No. 2 is used. Proceed to Section 8.

7.5.3. If the pH from Step 7.5.2 is >5.0, add 3.5 mL 1.0 N HCl, slurry briefly, cover with a watch glass, heat to 50°C and hold at 50°C for 10 min.

7.5.4. Let the solution cool to room temperature and record the pH. If the pH is <5.0, use extraction fluid No. 1. If the pH is >5.0, use extraction fluid No. 2. Proceed to Section 8.

7.6. The sample of waste used in this step shall **NOT** be used any further. A new sample of the waste should be used for extractions in Steps 8 and 9.

8. Extraction Procedure

8.1. Although a sample of at least 100 g (solid and liquid phases) is required, a larger sample may be more appropriate, depending on the solids content of the waste sample (percent solids, see Step 7.2) and whether the initial liquid phase of the waste will be miscible with the aqueous extract of the solid. Enough solids should be generated for extraction so that the volume of TCLP extract will be sufficient to support all the analyses required. If the amount of extract generated by a single TCLP extraction will not be sufficient to perform all the analyses to be conducted, it is recommended that more than one extraction be performed and that the extracts from each extraction be combined and then aliquoted for analysis.

8.2. If the waste will obviously yield no liquid when subjected to pressure filtration (i.e., is 100% solid, see Step 7.2), weigh out a representative subsample of the waste (100 g minimum) and proceed to Step 8.10.

8.3. If the sample is liquid or multiphasic, liquid/solid separation is required. This involves filtration and is outlined in Steps 8.4 to 8.9.

8.4. Weigh the container that will receive the filtrate.

8.5. Assemble the filter holder and filter following the manufacturer's instructions. Place the filter on the support screen and secure it. Acid wash the filter if evaluating the mobility of metals.

8.6. Weigh out a representative subsample of the waste (100 g minimum) and record the weight. If the waste was shown to contain <0.5% dry solids (Step 7.3), the waste, after filtration, is defined as the TCLP extract. Therefore, enough of the sample should be filtered so that the amount of filtered liquid will support all the analyses required of the TCLP extract. For wastes containing >0.5% dry solids (Steps 7.2 or 7.3), use the percent solids information obtained in Step 7.2 to determine the optimum sample size (100-g minimum) for filtration. Enough

solids should be generated after filtration to support the analyses to be performed on the TCLP extract.

8.7. Allow slurries to stand to permit the solid phase to settle. Wastes that settle slowly may be centrifuged before filtration. Centrifugation is to be used only as an aid to filtration. If centrifugation is used, the liquid should be decanted and filtered and the solid portion of the waste filtered through the same filtration system.

8.8. Quantitatively transfer the waste sample (liquid and solid phases) to the filter holder. If filtration of the waste at 4°C reduces the amount of expressed liquid below what would be expressed at room temperature, allow the sample to warm up to room temperature in the device before filtering.

NOTE: If waste material (>1% of the original sample weight) has obviously adhered to the container used to transfer the sample to the filtration apparatus, determine the weight of this residue and subtract it from the sample weight determined in Step 8.6, to determine the weight of the waste sample that will be filtered.

Gradually apply vacuum or gentle pressure (1-10 psi) until air or pressurizing gas moves through the filter. If this point is not reached below 10 psi, and if no additional liquid has passed through the filter in any 2-min interval, slowly increase the pressure in 10-psi increments to a maximum of 50 psi. After each incremental increase, if the pressurizing gas has not moved through the filter, and if no additional liquid has passed through the filter in any 2-min interval, proceed to the next 10-psi increment. When the pressurizing gas begins to move through the filter, or when the liquid flow has ceased at 50 psi (i.e., filtration does not produce any additional filtrate within a 2-min period), filtration is stopped.

NOTE: Instantaneous application of high pressure can degrade the glass fiber filter and may cause premature plugging.

8.9. The material in the filter holder is defined as the solid phase of the waste, and the filtrate is defined as the liquid phase. Weigh the filtrate. The liquid phase may now be either analyzed (see Step 8.14) or stored at 4°C until time of analysis.

NOTE: Some wastes, such as oily wastes and some paint wastes, will obviously contain some material that appears to be a liquid. But even after applying vacuum or pressure filtration, as outlined in Step 8.8, this material may not filter. If this is the case, the material in the filtration device is defined as a solid and is carried through the extraction as a solid. The original filter is not to be replaced with a fresh filter under any circumstances. Only one filter is to be used.

8.10. If the waste contains <0.5% dry solids (see Step 7.3), proceed to Step 8.14. If the waste contains >0.5% dry solids (see Step 7.2 or 7.3), and if particle-size reduction of the solid was needed in Step 7.4, proceed to Step 8.11. If particle-size reduction was not required in Step 7.4, quantitatively transfer the solid material into the extractor vessel, including the filter used to separate the initial liquid from the solid phase. Proceed to Step 8.12.

8.11. The solid portion of the waste is prepared for extraction by crushing, cutting, or grinding the waste to a surface area or particle size as described in Step 7.4. When the surface area or particle size has been appropriately altered, quantitatively transfer the solid material into the extractor vessel, including the filter used to separate the initial liquid from the solid phase.

NOTE: The waste should be sieved only through a Teflon-coated sieve, to avoid possible contamination of the sample. Surface area requirements are meant for filamentous (e.g., paper, cloth) and similar waste materials. Actual measurement of surface area is not recommended.

8.12. Determine the amount of extraction fluid to add to the extractor vessel as follows:

Weight of extraction fluid = 0.5 × % solids × weight of waste filtered.

Slowly add this amount of appropriate extraction fluid (see Step 7.5) to the extractor vessel. Close the extractor bottle tightly (it is recommended that Teflon tape be used to ensure a tight seal), secure it in the rotary extractor device, and rotate it at 30 ± 2 rpm for 18 ± 2 h. Ambient temperature (i.e., temperature of room in which extraction is to take place) must be maintained at 22 ± 3°C during the extraction period.

NOTE: As agitation continues, pressure may build up within the extractor bottle for some types of wastes (e.g., lime or calcium carbonate containing waste may evolve gases such as carbon dioxide). To relieve excess pressure, the extractor bottle may be opened periodically (e.g., after 15 min, 30 min, and 1 h) and vented into a hood.

8.13. Following the extraction, the material in the extractor vessel is separated into its component liquid and solid phases by filtering through a new glass fiber filter, as outlined in Step 8.8. For final filtration of the TCLP extract, the filter may be changed, if necessary, to facilitate filtration. Filter(s) must be acid-washed if the mobility of metals is being evaluated.

8.14. The TCLP extract is prepared as follows:

8.14.1. If the waste contained no initial liquid phase, the filtered liquid material obtained from Step 8.13 is defined as the TCLP extract. Proceed to Step 8.15.

8.14.2. If compatible (i.e., multiple phases will not result on combination), the filtered liquid resulting from Step 8.13 is combined with the initial liquid phase of the waste obtained in Step 8.8. This combined liquid is defined as the TCLP extract. Proceed to Step 8.15.

8.14.3. If the initial liquid phase of the waste obtained from Step 8.8 is not or may not be compatible with the filtered liquid resulting from Step 8.13, these liquids are not combined. These liquids, collectively defined as the TCLP extract, are analyzed separately and the results are combined mathematically. Proceed to Step 8.15.

8.15. Following collection of the TCLP extract, it is recommended that the pH of the extract be recorded. The extract should be immediately aliquoted for analysis and properly preserved (metals aliquots must be acidified with concentrated nitric acid to pH <2). The TCLP extract must be prepared and analyzed according to appropriate analytical methods. TCLP extracts to be analyzed for metals other than mercury must be acid digested.

8.16. The contaminant concentrations in the TCLP extract are compared with the thresholds identified in the appropriate regulations. Refer to Source Material 11.1 for quality assurance requirements.

9. Calculations

9.1. If the individual phases are to be analyzed separately, determine the volume of the individual phases (to ±0.5%), conduct the appropriate analyses, and combine the results mathematically by using a simple volume-weighted average:

$$\text{Final analyte concentration} = \frac{(V_1 \times C_1) + (V_2 \times C_2)}{V_1 + V_2} ,$$

where V_1 = the volume of the first phase (L),
C_1 = the concentration of the contaminant of concern in the first phase (mg/L),
V_2 = the volume of the second phase (L), and
C_2 = the concentration of the contaminant of concern in the second phase (mg/L).

Chromium concentrations must be interpreted differently. A waste containing chromium will be determined to be toxic if (1) the waste extract has an initial pH of <7 and contains more than 5 mg/L of hexavalent chromium in the resulting extract, or (2) the waste extract has an initial pH >7 and a final pH >7 and contains more than 5 mg/L of hexavalent chromium in the extract, or (3) the waste extract has an initial pH >7 and a final pH <7 and contains more than

5 mg/L of total chromium, unless the chromium is trivalent. To determine whether the chromium is trivalent, the sample must be processed according to an alkaline digestion method (Method 3060) and analyzed for hexavalent chromium (Methods 7195, 7196, or 7197). (Refer to SW-846 Manual, Source Material 11.1.)

9.2. Calculation for standard additions:

$$C = \frac{D \times R_u \times C_s}{R_u - R_s},$$

where C = concentration of unknown,
C_s = concentration of standard added,
R_u = instrument reading of unknown,
R_s = instrument reading of unknown plus standard, and
D = dilution of both standard and unknown (must be the same for each).

10. Proper Waste Disposal Practices

10.1. Soil-water slurry.

10.1.1. The TCLP waste consists of approximately 1500 mL of a slurry that remains after filtering the sample for TCLP analysis.

10.1.2. If, after analysis, the sample is found to be below the levels of concern for the TCLP analytes, dispose of the liquid portion of the sample in a sink approved for the disposal of inorganic acids and bases. Dispose of the solid portion of the sample as ordinary laboratory trash.

10.1.2.1. Concern levels:

Cd, Se,	>	1 ppm
Ag, As, Cr, Pb	>	5 ppm
Ba	>	100 ppm

10.1.3. If, after analysis, the sample is found to be above the levels of concern for any of the TCLP analytes, accumulate the slurry in a coated glass bottle in a secondary containment tray.

10.1.3.1. Label the bottle with a hazardous waste label indicating its use for the TCLP waste samples.

10.1.3.2. When the bottle is full, keep it in the secondary containment tray pending pickup by the Waste Management group.

10.2. Waste pickup.

10.2.1. When the waste bottle is full, request pickup by the Waste Management group using the current Chemical Waste Disposal Request form (CWDR). The current Waste Profile Request Form (WPRF) describing the waste is referenced on the CWDR.

10.2.2. The Waste Management Group picks up the waste for disposal in accord with Laboratory policy.

11. Source Materials

11.1. *Test Methods for Evaluating Solid Waste, SW-846*, (Office of Solid Waste and Emergency Response, Washington, D.C., 1982).

11.2. *Federal Register*, Vol. 51, No. 216, pp. 40643-40652.

11.3. "Low-Level Radioactive Solid Waste," Administrative Requirement 10-2, in *Environment, Safety, and Health Manual*, Los Alamos National Laboratory Manual, Chapter 1 (most recent edition).

11.4. "Chemical, Hazardous, and Mixed Waste," Administrative Requirement 10-3, in *Environment, Safety, and Health Manual*, Los Alamos National Laboratory Manual, Chapter 1 (most recent edition).

Revisions or additions to the procedure are marked (▒). Where a section heading is marked, the entire section has been revised.

OIL AND GREASE, TOTAL RECOVERABLE

Analyte: Nonvolatile hydrocarbons	**Method No.:** WI660
Matrix: Water and waste water	**Detection Limit:** 0.5 mg/L
Procedure: Extraction	**Accuracy and Precision:** 100% ± 9.3%
Effective Date: 09/02/87	**Author:** Harold P. Patterson

SAFETY NOTE: Before beginning this procedure, read all of the Material Safety Data Sheets for the chemicals listed in Sec. 7. Read Sec. 4.3 of the EM-9 Safety Manual for information on personal protective clothing and equipment.

1. Principle of Method

1.1. The sample is acidified to a low pH (<2) and serially extracted with fluorocarbon-113 in a separatory funnel. The solvent is evaporated from the extract and the residue is weighed.

1.2. This method includes the measurement of fluorocarbon-113 extractable matter from surface and saline waters, and industrial and domestic wastes. It is applicable to the determination of relatively nonvolatile hydrocarbons, vegetable oils, animal fats, waxes, soaps, greases, and related matter.

1.3. The method is not applicable to measurement of light hydrocarbons that volatilize at temperatures below 70°C. Petroleum fuels from gasoline through No. 2 fuel oils are completely or partially lost in the solvent removal operation.

1.4. Some crude oils and heavy fuel oils contain a significant percentage of residue-type materials that are not soluble in fluorocarbon-113. Recoveries of these materials will be low.

2. Detection Limit

2.1. The method covers the range from 0.5 to 1000 mg/L of extractable material.

3. Accuracy and Precision

3.1. The accuracy and precision for this method was determined using a blind quality control sample. Thirteen determinations were made over a 6-month period with a mean recovery of 100% ± 9.3%.

4. Interference

4.1. The definition of oil and grease is based on the procedure used. The nature of the oil and/or grease, and the presence of extractable nonoily matter will influence the material measured and the interpretation of results.

5. Collection and Storage of Samples

5.1. Collect a 1-L sample in a glass bottle. If analysis is to be delayed for more than a few hours, preserve the sample by the adding 5 mL of 50% HCl at the time of collection and refrigerate at 4°C.

5.2. Because losses of grease will occur on sampling equipment, the collection of a composite sample is impractical. Individual portions collected at prescribed time intervals must be analyzed separately to obtain the average concentration over an extended period.

6. Apparatus

6.1. Separatory funnel: 2000-mL with Teflon stopcock.

6.2. Vacuum source.

6.3. Boiling flask: 125-mL.

6.4. Filter paper: No. 40, 11-cm-diam.

6.5. Constant-temperature bath and shaker: Yamato, Japan, supplied by VWR Scientific, Los Alamos, New Mexico.

6.6. Vacuum tubing: 1/8-in.-i.d.

6.7. Drying desiccator.

6.8. Graduated cylinder: 1-L.

6.9. Reflux condensor.

7. Reagents

7.1. Hydrochloric acid (50%). Mix an equal volume of distilled water with concentrated hydrochloric acid.

7.2. Fluorocarbon-113 (1,1,2-trichloro-1,2,2-trifluoroethane).

7.3. Anhydrous sodium sulfate.

8. Procedure

8.1. With a wax pencil, mark the meniscus of the sample on the sample bottle as received. Save the bottle for later measurement of sample volume.

8.2. If the sample was not acidified at the time of collection, add 5 mL of hydrochloric acid to the sample bottle. Mix the sample and check the pH by touching pH-sensitive paper to the cap to insure that the pH is 2 or lower. Add more acid if necessary.

8.3. Pour the sample into the 2000-mL separatory funnel.

8.4. Tare a boiling flask (predried in an oven at 103°C and stored in a desiccator).

8.5. Add 30 mL of fluorocarbon-113 to the sample bottle and rotate the bottle to rinse the sides. Transfer the solvent into the separatory funnel. Extract by shaking vigorously for 2 min. Allow the layers to separate. Filter the solvent layer into the flask through a funnel containing solvent-moistened filter paper.

NOTE: An emulsion that fails to dissipate can be broken by pouring about 1 g of sodium sulfate into the filter paper cone and slowly draining the emulsion through the salt. Additional 1-g portions can be added to the cone as required.

8.6. Repeat Step 8.5 twice, using additional portions of fresh solvent. Combine all solvent in the boiling flask.

8.7. Rinse the tip of the separatory funnel, the filter paper, and the funnel with a total of 10 mL of solvent and collect the rinsings in the flask.

8.8. Place the boiling flask in the constant-temperature bath, adjusted to 70°C. Secure the flask. Place the shaker-bath in a well-ventilated hood. Connect the flask to a reflux condensor. Collect the refluxed freon in a clean flask and save for reuse. Oil and residues will remain in the flask.

8.9. When all the fluorocarbon has evaporated from the flask, eliminate the remaining solvent vapor by removing the flask from the bath and inserting a vaccum tube about midcenter of the flask to sweep out the flask with air for 15 s. Wipe the outside of flask well to remove excess moisture and fingerprints.

8.10. Cool the boiling flask in a desiccator for 30 min and weigh.

8.11. Run a reagent blank with the above method to make a correction if necessary.

8.12. Add water to the sample bottle saved from Step 8.1 and fill to the line marked with the wax pencil. Pour this water into a graduated cylinder to measure the sample volume.

9. Calculation

9.1. Calculate the total recoverable oil and grease as follows.

$$C = \frac{R - B}{V} ,$$

where C = total oil and grease (mg/L),
R = residue, gross weight of extraction flask minus the tare weight (mg),
B = blank determination, residue of equivalent volume of extraction solvent (mg), and
V = volume of sample (mL).

10. Source Material

10.1. Environmental Monitoring and Support Laboratory, *Methods for Chemical Analysis of Water and Waste*, Method 413.1 (Office of Research and Development, US Environmental Protection Agency, Cincinnati, Ohio, 1983).

SPECIFIC GRAVITY OF WATER AND WASTE WATER

Analyte: Dissovled solids in solution	**Method No.:** WI670
Matrix: Water and waste water	**Accuracy:** ± 1%
Procedure: Specific gravity	
Effective Date: 10/01/87	**Author:** Harold P. Patterson

SAFETY NOTE: No chemicals are used in this procedure. Read Sec. 4.3 of the EM-9 Safety Manual for information on personal protective clothing and equipment.

1. Principle of Method

1.1. The specific gravity of a substance is the ratio of the weight of any volume of that substance to the weight of an equal volume of some other substance taken as the standard (usually water) at a stated temperature.

1.2. The specific gravity is measured directly with a hydrometer at 60°F.

2. Accuracy

2.1. The estimated accuracy from direct reading of the hydrometer is ±1%.

3. Interference

3.1. The measurement will be inaccurate if the sample temperature is not at 60°F.

4. Collection and Storage of Samples

4.1. Samples should be stored in an airtight container to prevent evaporation.

5. Apparatus

5.1. Thermometer: in degrees Fahrenheit with a 0-100°F range.

5.2. Hydrometers: to cover range of 0.70 to 2.00. VWR Scientific, Los Alamos, New Mexico.

5.3. Hydrometer cylinder: 300-mL. VWR Scientific, Los Alamos, New Mexico.

5.4. Constant-temperature water bath: Yamato, VWR Scientific, Los Alamos, New Mexico.

6. Procedure

6.1. Adjust the temperature of the solution to be tested to 60°F. This can be done by swirling the sample in its closed container under cold running tap water or heating in a constant-temperature water bath at 60°F.

6.2. Select a hydrometer that is within the range of the specific gravity of the solution.

6.3. Fill the hydrometer cylinder with approximately 200 mL of the solution to be tested.

6.4. Carefully insert the hydrometer into the cylinder, being careful not to drop and break the hydrometer by hitting the bottom of the cylinder.

6.5. Be sure the hydrometer is floating away from the bottom and sides of the cylinder.

6.6. Read the specific gravity directly from the hydrometer at the meniscus of the liquid.

7. Source Material

7.1. American Public Health Association, American Waterworks Association, and Water Pollution Control Federation, *Standard Methods for the Examination of Water and Waste Water*, 16th ed., Method 213E (American Public Health Association, Washington, DC, 1985).

TRACE METAL DIGESTION — DRINKING WATER, SURFACE WATER, AND NPDES EFFLUENTS

Analyte: Trace metals	**Method No.:** WI680
Matrix: Water, aqueous waste, leachates, and National Pollutant Discharge Elimination System (NPDES) effluents	
Procedure: Nitric acid digestion	
Effective Date: 03/01/85	**Author:** Mary Carol Williams

SAFETY NOTE: Before beginning this procedure, read all of the Material Safety Data Sheets for the chemicals listed in Sec. 5. Read Sec. 4.3 of the EM-9 Safety Manual for information on personal protective clothing and equiment.

1. Principle of Method

1.1. Principle.

1.1.1. Organic and inorganic metal complexes are decomposed by hot nitric acid and converted to soluble nitrate salts.

1.2. Definitions.

1.2.1. Dissolved elements — those elements that will pass through a 0.45-μm membrane filter.

1.2.2. Suspended elements — those elements that are retained by a 0.45-μm membrane filter.

1.2.3. Total elements — concentration determined on an unfiltered sample following vigorous digestion (Step 6.3) or the sum of the dissolved plus suspended concentrations (Step 6.1 plus 6.2).

1.2.4. Total recoverable elements — concentration determined on an unfiltered sample following treatment with hot, dilute, mineral acid.

2. Interferences

2.1. Volatile metals or metal complexes (Se, As) may be lost during prolonged heating.

2.2. For the determination of trace elements, contamination and loss are of prime concern. Dust in the laboratory environment, impurities in reagents, and impurities on laboratory apparatus that come into contact with the sample are all sources of potential contamination. Sample containers can introduce either positive or negative errors in the measurement of trace elements by (1) contributing contaminants through leaching or surface desorption and (2) by depleting concentrations through absorption.

3. Sample Handling and Preservation

3.1. The digestion and analysis of all metals must be completed within six months of collection.

3.2. The collection and treatment of the sample prior to analysis requires special attention. Laboratory glassware, including the sample bottle (whether polyethylene, polyproplyene, or FEP-fluorocarbon), should be thoroughly washed with detergent and tap water and rinsed in the following order with 1:1 nitric acid/tap water, 1:1 hydrochloric acid/tap water, and finally, distilled deionized water (DDW).

3.3. Chromic acid may be useful for removing organic deposits from glassware. The glassware must be thoroughly rinsed with water to remove the last traces of chromium. This is especially important if chromium is to be included in the analytical scheme. (A commercial product, NO-CHROMIX, is available from Godax Laboratories, 6 Varick St., New York, NY.)

3.4. If an active analytical quality control program using spiked samples and reagent blanks verifies that certain steps in the cleaning procedure are not required for routine samples, those steps may be eliminated from the procedure.

3.5. Before collecting the sample, decide what type of data are desired (dissolved, suspended, or total) so that the appropriate preservation and pretreatment steps may be taken. Any filtration or acid preservation must be performed at the time the sample is collected or as soon as possible thereafter.

3.5.1. Dissolved elements. Filter the sample through a 0.45-μm membrane filter as soon as practical after collection.

NOTE: The use of glass or plastic filtering apparatus is recommended to avoid possible contamination.

Use the first 50-100 mL of filtered sample to rinse the filter flask. Discard this portion and collect the required volume of filtrate. Acidify the filtrate with 1:1 HNO_3 to a pH of 2 or less. Normally, 3 mL of 1:1 acid per liter should be sufficient to preserve the sample.

3.5.2. Suspended elements. Filter a measured volume of unpreserved sample through a 0.45-μm membrane filter as soon as practical after collection. Transfer the filter plus suspended material to a suitable container for storage and/or shipment. No preservative is required.

3.5.3. Total or total recoverable elements. Acidify the sample with 1:1 HNO_3 to a pH of 2 or less as soon as possible, preferably at the time of collection. The sample is not filtered before processing.

4. Apparatus

4.1. Beakers: 50- or 100-mL, tall-form, Pyrex Griffin or Teflon.

4.2. Hot plate: Sybron/Thermolyne type 2200, Dubuque, Iowa.

4.3. Pipettes: class A, volumetric.

4.4. Funnels: 11-cm, disposable.

4.5. Bottles: 50-mL, disposable, polyethylene.

4.6. Filter paper: 11-cm, Whatman No. 2.

5. Reagents

5.1. Nitric acid (concentrated, reagent-grade).

5.2. Double-deionized water. ASTM Type II, less than 18 μmhos/cm. Water should be monitored for impurities.

6. Procedure

6.1. Dissolved elements. The filtered, preserved samples may often be analyzed as received. The acid matrix and concentration of the calibration standards must be the same as that of the samples. If a precipitate forms upon acidification of the sample or during transit or storage, redissolve it before analysis by adding additional acid and/or by heat as described in Step 6.3.

6.2. Suspended elements.

6.2.1. Transfer the membrane filter containing the insoluble material to a 100-mL beaker and add 4 mL of concentrated HNO_3. Cover the beaker with a watch glass and heat gently. The warm acid will soon dissolve the membrane.

6.2.2. Increase the temperature of the hot plate and digest the material. When the acid has nearly evaporated, cool the beaker and watch glass and add

another 3 mL of concentrated HNO_3. Cover and continue heating until the digestion is complete, generally indicated by a light-colored digestate.

6.2.3. Evaporate to near dryness (2 mL), cool, add 10 mL of 1:1 HCl and 15 mL of double-deionized water per 100 mL of dilution and gently warm the beaker for 15 min to dissolve any precipitated or residue material.

6.2.4. Allow to cool. Wash down the watch glass and beaker walls with DDW. Adjust the volume based on the expected concentrations of elements present. This volume will vary from 50-500 mL depending on the elements to be determined. The sample is now ready for analysis. Concentrations are reported as "suspended."

6.3. Total elements.

6.3.1. Transfer 50 mL of acidified sample to a Griffin beaker or to a 50-mL, graduated, polyethylene centrifuge tube. If chromium is to be determined, add 0.5 mL of 30% hydrogen peroxide (H_2O_2). Add 3 mL of concentrated HNO_3.

6.3.2. Place the beaker on a hot plate and cautiously evaporate to near dryness, making certain that the sample does not boil and that no area of the bottom of the beaker is allowed to go dry. Cool the beaker and add another 3-mL aliquot of concentrated HNO_3.

6.3.3. Cover the beaker with a watch glass and return to the hot plate. Increase the temperature of the hot plate so that a gentle reflux action occurs. Continue heating, adding additional acid as necessary, until the digestion is complete (generally indicated when the digestate is light in color or does not change in appearance with continued refluxing).

6.3.4. Evaporate to near dryness and cool the beaker. Add 5 mL of 1:1 HCl and 15 mL of double-deionized water and warm the beaker gently for 15 min to dissolve any precipitate or residue resulting from evaporation. Add HNO_3 to samples that will be analyzed by graphite furnace instead of HCl. Allow to cool. Wash down the beaker walls and watch glass with DDW.

6.3.5. Adjust the sample to a predetermined volume based on the expected concentrations of elements present. The sample is now ready for analysis. Concentrations are reported as "total."

6.3.6. If arsenic or selenium is to be determined, transfer 50 mL of well-mixed sample to a 100-mL Griffin beaker or a 50-mL polyethylene centrifuge tube and add 1 mL of 30% H_2O_2 and enough concentrated

HNO_3 to result in an acid concentration of 1% (v/v). Heat for 1 h at 95°C or until the volume is slightly less than 25 mL. Cool and bring back to 50 mL with double-deionized water.

6.4. Total recoverable elements. Choose a measured volume of a well-mixed, acid-preserved sample appropriate for the expected level of elements and transfer to a Griffin beaker. Add 2 mL of 1:1 HNO_3 and 10 mL of 1:1 HCl to the sample and heat on a steam bath or hot plate until the volume has been reduced to about 25 mL, making certain the sample does not boil. After this treatment, cool the sample and dilute to volume.

6.5. Filter digestates through DDW-washed Whatman No. 2 filter paper to remove insoluble material that could clog the nebulizer. After dilution and mixing, the sample may be centrifuged or allowed to settle by gravity overnight to remove insoluble material in place of filtering. Label bottles with the sample number and date of digestion.

6.6. Repeat Steps 6.1 - 6.5 with one reagent blank, 10% duplicates, and 10% spikes.

7. Source Material

7.1. Environmental Monitoring and Support Laboratory, *Methods for Chemical Analysis of Water and Wastes*, EPA-600/4-79-020 (US Enviromental Protection Agency, Cincinnati, Ohio, March 1983).

TRACE METAL DIGESTION — SLUDGE

Analyte: Ag, As, Ba, Cd, Cr, Cu, Fe, Mn, Ni, Pb, and Zn	**Method No.:** WI700
Matrix: Sludge	
Procedure: Acid digestion and atomic absorption spectrophotometry	**Accuracy and Precision:** See Sec. 2
Effective Date: 09/03/85	**Author:** Mary Carol Williams

SAFETY NOTE: Before beginning this procedure, read all of the Material Safety Data Sheets for the chemicals listed in Sec. 5. Read Sec. 4.3 of the EM-9 Safety Manual for information on personal protective clothing and equipment.

1. Principle of Method

1.1. Organic metal complexes are decomposed by the action of hot nitric and hydrofluoric acids at elevated pressure (2 atm). After dilution and filtration, acidic solutions may be measured by atomic absorption spectrophotometry (AAS), Method No. WI100. Alternate instrumental techniques include inductively coupled plasma mass spectrometry (ICPMS), Method No. EI360, or inductively coupled plasma atomic emission spectrometry (ICPAES), Method No. EI370.

2. Accuracy and Precision

2.1. The mean and standard deviations (N = 5 replicate digestions) for various analytes are listed below.

Element	Units	Mean	±	Std. Dev.	Accepted Value
Atomic Absorption Analyses					
Ag	mg/kg	67.2	±	6.8	80.6
As	mg/kg	3.07	±	0.22	4.3
Be	mg/kg	509	±	60	580
Cd	mg/kg	20.2	±	0.87	19.1

Element	Units	Mean	±	Std. Dev.	Accepted Value
Atomic Absorption Analyses (cont)					
Pb	mg/kg	544	±	17	526
Se	mg/kg	4.91	±	1.3	4.7
V	mg/kg	27	±	2.6	23.0
Inductively Coupled Plasma Atomic Emission Analyses					
Al	g/kg	14.1	±	0.78	13.0
Ba	g/kg	1.48	±	0.017	1.6
Cr	mg/kg	215	±	5.2	193
Cu	g/kg	1.08	±	0.026	1.01
Fe	g/kg	18.6	±	0.35	16.5
Mn	mg/kg	241	±	3.5	202
Ni	mg/kg	210	±	4.4	194
Ti	g/kg	2.29	±	0.044	2.12
Zn	g/kg	1.48	±	0.017	1.32

3. Interferences

3.1. Volatile elements such as mercury may be lost during heating. Method No. WI110 is recommended for mercury in sludges.

3.2. Arsenic forms volatile compounds with the anions present in sludge ($AsCl_3$, AsF_3, AsF_5) and may be lost during heating.

4. Apparatus

4.1. Digestion.

4.1.1. Analytical balance: capable of weighing to 0.0001 g.

4.1.2. Pressure cooker: 8-qt. with 15-lb weight.

4.1.3. Hot plate: adjustable.

4.1.4. Centrifuge tubes: 50-mL, graduated, polyethylene.

4.1.5. Funnels: disposable.

4.1.6. Filter paper: Whatman No. 2.

4.1.7. Bottles: 50-mL, polyethylene with caps, disposable.

4.1.8. Grinder or mortar and pestle.

4.1.9. Pipette: 10-mL, macrotransfer.

4.1.10. Metal sieve: No. 35.

4.2. Trace metal determination. See individual analytical methods for AAS, ICPAES, or ICPMS.

5. Reagents

5.1. Nitric acid (concentrated, reagent-grade).

5.2. Hydrofluoric acid (concentrated, reagent-grade).

5.3. Double-deionized water. ASTM Type II, less than 18 μmhos/cm.

6. Procedure

6.1. Air dry solid sludge until it is thoroughly dry.

6.2. Grind the total sample until it passes through a No. 35 sieve. Store approximately 10 g of powdered sludge in a 50-mL polyethylene centrifuge tube.

6.3. Add 0.500 ± 0.001 g of powdered sludge to a 50-mL polyethylene centrifuge tube. Rinse the weighing boat with 20 mL of 10% HNO_3 and add rinsate to the tube. Add 2.0 mL of concentrated HF to the tube and cap.

6.4. Repeat Steps 6.1 to 6.3 for a digested blank, digested spike blank, spiked samples, 10% duplicates, and 10% quality control samples.

6.5. Place tubes in a test tube rack contained in the pressure cooker. Add distilled water to a level of approximately 1 in. Secure the lid on the pressure cooker.

6.6. Heat on a hot plate until steam escapes from the lid vent. Apply a pressure regulator and reduce heat just enough to keep the pressure regulator moving. Continue heating for 1 h. Turn off the heat and let the pressure cooker cool undisturbed. Remove the regulator and lid.

6.7. Dilute samples to 50 mL with double-deoinized water. Shake well and filter through a No. 2 Whatman filter paper into disposable 50-mL polyethylene bottles.

6.8. Analyze by AAS (Method No. WI100), ICPMS (Method No. EI360), or ICPAES (Method No. EI370).

7. Calculations

7.1. Determine the element concentration in the solid sludge (mg/kg) using the following equation.

$$C = A \times \frac{V}{B} \times 100 \quad ,$$

where C = concentration (mg/kg),
A = analyte in digested solution (mg/L),
B = weight of sludge digested (0.5 g), and
V = volume of dilution (50 mL).

8. Source Materials

8.1. J. S. Nielson and S. E. Hrudey, *Environ. Sci. Technol.* **18**, 130 (1984).

8.2. M. C. Williams, E. A. Stallings, T. M. Foreman, and E. S. Gladney, *Atomic Spectroscopy* **9(4)**, 110 (1988).

AMERICIUM-241 IN WASTE WATER – INSTRUMENTAL GAMMA-RAY SPECTROMETRY USING A GE(LI) DETECTOR

Analyte: Americium-241	**Method No.:** WR100
Matrix: Waste water	**Minimum Detectable Concentration:** 400 pCi/sample
Procedure: Instrumental gamma-ray spectrometry using a Ge(Li) detector	**Accuracy and Precision:** (mean ± 1 sigma) 104% ± 2% at the 30-nCi level
	Acceptable Minimum Detectable Activity: 50 pCi/L
Effective Date: 01/22/86	**Author:** Terry D. Filer

SAFETY NOTE: Before beginning this procedure, read all of the Material Safety Data Sheets for the chemicals listed in Sec. 7. Read Sec. 4.3 of the EM-9 Safety Manual for information on personal protective clothing and equipment.

1. Principle of Method

1.1. Americium-241 activity is determined by instrumental gamma-ray spectrometry using a Ge(Li) detector. Quantitative data are obtained by comparison of the net gamma-ray peak area at 59.5 keV with a standard of known ^{241}Am content.

2. Sensitivity

2.1. Sensitivity is limited by counter background.

2.2. For routine measurements with a 60-min count length and a counting efficiency of approximately 1.3%, the minimum detection limit (three times the standard deviation of the blank) is 400 pCi/sample (Laboratory Notebook A004590, p. 128).

3. Accuracy and Precision

3.1. Precision for waste water samples is primarily limited by the low peak/background ratio. Routinely report waste water results with a minimum of 2% uncertainty. For low-activity samples, report uncertainties based on standard counting statistics whenever they exceed 2%.

3.2. Routine performance data are calculated by dividing the result on each individual QC analysis by the certified value and are summarized by calculating a mean ratio ± 1 standard deviation (std dev).

3.3. The mean value of the ratio of the QC result compared with the certified value is 104% ± 2% (Laboratory Notebook A004590, p. 133).

4. Interferences

4.1. There are no gamma-ray spectral interferences for ^{241}Am.

5. Collection and Storage of Samples

5.1. Soon after collection, acidify water samples to 1% with HNO_3.

5.2. Complete analysis within 6 months.

6. Apparatus

6.1. Graduated cylinder: 500-mL.

6.2. Gamma-ray spectrometer with Ge(Li) detector: EG&G Ortec, Model 137C P2-2, EG&G Ortec, Oak Ridge, Tennessee.

6.3. EG&G Ortec 673 spectroscopy amplifier and gated integrator: EG&G Ortec, Oak Ridge, Tennessee.

6.4. Personal computer: IBM Corp., Boca Raton, Florida.

6.5. Enhanced color display monitor: IBM Corp., Boca Raton, Florida.

6.6. Proprinter: IBM Corp., Boca Raton, Florida.

6.7. Multichannel Analyzer Software: EG&G Ortec ACE 4-B1 and ACE 2-B1, EG&G Ortec, Oak Ridge, Tennessee.

6.8. Maestro Multichannel Analyzer Software: EG&G Ortec A63-B2/A63-B4, EG&G Ortec, Oak Ridge, Tennessee.

6.9. Master Library Software: EG&G Ortec A53, EG&G Ortec, Oak Ridge, Tennessee.

6.10. Application Manager Software: EG&G Ortec A18, EG&G Ortec, Oak Ridge, Tennessee.

6.11. GeLiGam Gamma-Ray Analysis Software: EG&G Ortec A30-B1, EG&G Ortec, Oak Ridge, Tennessee.

6.12. Polyethylene bottles: 500-mL, wide-mouth, VWR series 16126.

7. Reagents

7.1. Nitric acid (concentrated, reagent-grade).

8. Calibration and Standards

8.1. Use an ^{241}Am primary standard obtained from Amersham (AMZ.44).

8.2. Determine counter efficiency by a 3600-s count on a 500-mL standard prepared from the Amersham (AMZ.44) primary standard.

8.3. Check detector energy calibration each week with National Institute of Standards and Technology (NIST) Standard Reference Material (SRM) 4213, an ^{241}Am standard.

8.4. Take background counts of 3600 s each week.

8.5. Check QC each week with an ^{241}Am primary standard (AMZ.240) obtained from Amersham (Laboratory Notebook A004590, pp. 115-117).

9. Procedure

9.1. Sample preparation.

9.1.1. Measure 500 mL in a graduated cylinder and pour into a 500-mL plastic bottle.

9.2. Nuclear counting.

9.2.1. Center the 500-mL sample bottle on the face of the Ge(Li) detector.

9.2.2. Accumulate gamma-ray spectra for 3600 s by entering **STARTACQ** at the DOS prompt. See *Application Manager (A18-B1)*, "Examples of Operation," pp. 15-18.

9.2.3. When the sample has completed the counting sequence, enter the following commands after the DOS prompt: **STORE**, **SAMPLE**, **DETECTOR**, **GERPAR**, and **CONVERT**. See *Application Manager (A18-B1)*, "Examples of Operation," p. 27 for **STORE**, pp. 50-51 for **SAMPLE**, pp. 54-57 for **DETECTOR**, pp. 66-76 for **GERPAR**, and pp. 87-88 for **CONVERT**.

10. Calculations

10.1. Calculate the activity of ^{241}Am in waste water using the following formula:

$$A = \frac{(C_s - C_b)}{Y \times E \times CT \times V \times 2200} ,$$

where
- A = activity (nCi/L),
- C_s = gross counts in the ^{241}Am peak,
- C_b = background counts,
- Y = gamma yield,
- E = detector efficiency,
- CT = count time (min),
- V = volume (L), and
- 2200 = constant.

10.2. The uncertainty in ^{241}Am activity is calculated from recoveries from seven replicates of NIST traceable materials. The replicates were individually sampled and each carried through the entire sample preparation and measurement process. Uncertainties were calculated as plus or minus the standard deviation of the difference between the true value and its measured value for each replicate. The uncertainty for this procedure was found to be ±2% (Laboratory Notebook A004590, p. 133). For low activity samples, uncertainties are based on standard counting statistics when they exceed 2%.

10.3. Identify the ^{241}Am peak and calculate the net counts under the peak using the procedure described in *GeLiGam (A30-B1) Gamma-Ray Analysis*. Enter the following commands after the DOS prompt: **AN1**, **AN2**, and **RPT**. See pp. 58-61 for **AN1**, pp. 61-62 for **AN2**, and pp. 63-67 for **RPT**.

11. Source Material

11.1. *Application Manager (A18-B1)*, "Examples of Operation" (EG&G Ortec, Oak Ridge, Tennessee, 1987).

11.2. *GeLiGam (A30-B1) Gamma-Ray Analysis* (EG&G Ortec, Oak Ridge, Tennessee, 1986).

Revisions or additions to the procedure are marked (▒▒▒▒). Where a section heading is marked, the entire section has been revised.

*U.S. Government Printing Office: 1992-673-036/67045

AMERICIUM-241 IN WASTE WATER AND FILTER CAKE — INSTRUMENTAL GAMMA-RAY SPECTROMETRY USING A NAI DETECTOR

Analyte: Americium-241	**Method No.:** WR110
Matrix: Waste water and filter cake	**Minimum Detectable Concentration:** 6 pCi/sample
Procedure: Instrumental gamma-ray spectrometry using a NaI detector	**Accuracy and Precision:** (mean ± 1 sigma) 108% ± 4% at the 5-nCi level
	Acceptable Minimum Detectable Activity: 50 pCi/L for waste water
Effective Date: 01/17/86	**Author:** Terry D. Filer

SAFETY NOTE: Before beginning this procedure, read all of the Material Safety Data Sheets for the chemicals listed in Sec. 7. Read Sec. 4.3 of the EM-9 Safety Manual for information on personal protective clothing and equipment.

1. Principle of Method

1.1. Americium-241 activity is determined by instrumental gamma-ray spectrometry using a NaI detector. Quantitative data are obtained by comparison of net gamma-ray peak area at 59.5 keV with matrix-based standards of known ^{241}Am content.

2. Sensitivity

2.1. Sensitivity is limited by the counter background.

2.2. For routine measurements with a 10-min count length and a counting efficiency of 27%, the minimum detection limit (the 95th percentile of the background distribution) is 6 pCi/sample.

3. Accuracy and Precision

3.1. Routine performance data are calculated by dividing the result on each individual QC analysis by its certified value and are summarized by calculating a mean ratio ± 1 standard deviation.

3.2. The mean value of the ratio of the QC result compared with the certified value is 108% ± 4% at the 5-nCi level.

4. Interferences

4.1. Interference is caused by nuclides that emit low-energy gamma rays, such as ^{237}Np.

5. Collection and Storage of Samples

5.1. Acidify waste water samples to 1.0% with HNO_3.

5.2. No treatment is given to filter cake samples before analysis.

5.3. Complete analysis within 6 months.

6. Apparatus

6.1. Gamma spectrometer: 4-in.-diam by 6-in., NaI well-type scintillation detector with a Canberra Model No. 8100 multichannel analyzer. Canberra Industries, Inc., Meriden, CT.

6.2. Disposable culture tubes: 13- by 100-mm, catalog no. 608 25-924. VWR Scientific, San Francisco, CA.

6.3. K.S.E. glove box: equipped with a Blue M Infra oven and an Ainsworth electronic balance (0.00- to 200.00-g capacity).

7. Reagents

7.1. Hydrofluoric acid (concentrated 48%, reagent-grade).

7.2. Nitric acid (concentrated 70%, reagent-grade).

7.3. Nitric acid (12 M) • hydrofluoric acid (1 M). Mix 1536 mL of concentrated HNO_3, 67 mL of concentrated HF, and 401 mL of water. Store in a 2000-mL polyethylene bottle.

7.4. Nitric acid. Dilute 1:1.

8. Calibration and Standards

8.1. Americium-241 standard. The primary ^{241}Am standard is obtained from Amersham (AMZ.44).

8.2. Calibration of the gamma-ray spectrometer with the NaI detector.

8.2.1. Calibrate the NaI detector using the primary ^{241}Am standard.

8.2.2. Take 10-min calibration counts. Determine the efficiency of the NaI detector by integrating the counts in 60 channels (20 channels to the left of the peak and 40 channels to the right of the peak) of the energy spectrum of the ^{241}Am primary standard.

8.2.3. Accumulate 10-min background counts for the energy spectrum for the NaI detector.

9. Procedure

9.1. Waste water samples.

9.1.1. Pipette 2.0 mL of the sample into a 13- by 100-mm test tube.

9.1.2. Clean off any exterior contamination.

9.1.3. Insert the sample into the NaI detector well and count for 10 min.

9.2. Filter cake samples.

9.2.1. Place 0.5 g of dried filter cake into a 150-mL beaker. Dry and weigh the sample in a glove box.

9.2.2. Add 20 mL of 12 M HNO_3 • 1 M HF to the sample, cover with a watch glass, and digest for 20 min on a hot plate.

9.2.3. Remove the sample from the hot plate and carefully decant the supernate into a 100-mL volumetric flask.

9.2.4. Add 20 mL of 12 M HNO_3 • 1 M HF to the remaining residue in the 150-mL beaker. Cover with a watch glass and digest for 20 min on a hot plate.

9.2.5. Remove the sample from the hot plate and carefully decant the supernate into the 100-mL volumetric flask containing the first digestion.

9.2.6. Add 10 mL of 1:1 HNO_3 to the remaining residue in the 150-mL beaker. Cover with a watch glass and digest for 10 min on a hot plate.

9.2.7. Remove the sample from the hot plate and carefully decant the supernate into the 100-mL volumetric flask.

9.2.8. The combined solution from the three digestions is diluted to volume with 1:1 HNO_3.

9.2.9. Pipette 2.0 mL of the digested filter cake into a 13- by 100-mm test tube.

9.2.10. Clean off any exterior contamination.

9.2.11. Insert the sample into the NaI detector well and count for 10 min.

10. Operation of Equipment

10.1. Refer to the operator's manual for the Canberra Model No. 8100 multichannel analyzer.

11. Calculations

11.1. Factors and their relative uncertainties in the calculation of ^{241}Am activity are as follows:

Definition	Factor Symbol	Value	% Uncertainty
Gross gamma count, sample	C_x	Variable	Variable
Blank count	B	about 40 cpm	5
Counting efficiency	CE	0.27	0.7
Counting time	CT	10 min	0.1
Volume	V	Variable, L or g	3
dpm/nCi	MC	2.22 × 10	0

11.2. Calculate counting efficiency for ^{241}Am using the following formula:

$$CE = \frac{C_s - B}{CT \times A_s} ,$$

where CE = counting efficiency,
C_s = counts of ^{241}Am standard,
B = counts in the blank,
CT = counting time (min), and
A_s = activity of ^{241}Am standard (dpm).

11.3. The standard deviation of the counting efficiency was calculated from the efficiencies measured over a period of several months.

11.4. Americium-241 activity in the sample in nCi/L or nCi/g is calculated using the following equation:

$$Am = \frac{C_x - B}{CT \times CE \times V \times MC} ,$$

where Am = ^{241}Am activity in the sample (nCi/L or nCi/g),
C_x = gross gamma counts of the sample,
B = counts in the blank,
CT = counting time (min),
CE = counting efficiency,
V = sample volume (L) or weight (g), and
MC = 2220.

11.5. The standard deviation in the sample at the 95% confidence level is given by

$$SD = 1.96 \times Am \times \sqrt{\frac{C_x + B}{(C_x - B)^2} + 0.001} ,$$

where SD = standard deviation,
1.96 = constant,
Am = ^{241}Am activity in the sample (nCi/L or nCi/g),
C_x = gross gamma counts of the sample,
B = counts in the blank, and
0.001 = constant.

CESIUM-137 IN WASTE WATER — INSTRUMENTAL GAMMA-RAY SPECTROMETRY USING A GE(LI) DETECTOR

Analyte: Cesium-137	**Method No.:** WR120
Matrix: Waste water	**Minimum Detectable Concentration:** 750 pCi/sample
Procedure: Instrumental gamma-ray spectrometry using a Ge(Li) detector	**Accuracy and Precision:** (mean ± 1 sigma) 106% ± 2% at the 100-nCi level
	Acceptable Minimum Detectable Activity: 20 nCi/L
Effective Date: 01/21/86	**Author:** Terry D. Filer

SAFETY NOTE: Before beginning this procedure, read all of the Material Safety Data Sheets for the chemicals listed in Sec. 7. Read Sec. 4.3 of the EM-9 Safety Manual for information on personal protective clothing and equipment.

1. Principle of Method

1.1. Cesium-137 is determined by instrumental gamma-ray spectrometry using Ge(Li) detectors. Quantitative data are obtained by comparison of the net gamma-ray peak area at 661 keV with standards of known ^{137}Cs content.

2. Sensitivity

2.1. Sensitivity is limited by counter background.

2.2. For routine measurements with a 60-min count length and a counting efficiency of 0.26%, the minimum detection limit (the 95th percentile of the background distribution) is 750 pCi/sample.

3. Accuracy and Precision

3.1. Precision for waste water samples is primarily limited by the low peak/background ratio. Report routine waste water results with a minimum 15% uncertainty. For low-activity samples, report uncertainties based on standard counting statistics whenever they exceed 15%.

3.2. Calculate routine performance data by dividing the result on each individual QC analysis by the certified value and summarize the data by calculating a mean ratio ± 1 standard deviation.

3.3. The mean value of the ratio of the QC result compared with the certified value is 106% ± 2%.

4. Interferences

4.1. There are no gamma-ray spectral interferences for ^{137}Cs.

4.2. Avoid direct detector contamination with ^{137}Cs from samples or improperly shielded high-level ^{137}Cs sources in or near the count room. Monitor these potential problem areas by systematically counting detector backgrounds each week.

5. Collection and Storage of Samples

5.1. Acidify water samples to 1% with HNO_3 soon after collection.

5.2. Complete analysis within 6 months.

6. Apparatus

6.1. Graduated cylinder: 500-mL.

6.2. Gamma-ray spectrometer with Ge(Li) detector: Princeton Gamma-Tech, Princeton, New Jersey.

6.3. EG&G Ortec 673 spectroscopy amplifier and gated integrator: EG&G Ortec, Oak Ridge, Tennessee.

6.4. Personal computer: IBM Corp., Boca Raton, Florida.

6.5. Enhanced color display monitor: IBM Corp., Boca Raton, Florida.

6.6. Proprinter: IBM Corp., Boca Raton, Florida.

6.7. Multichannel Analyzer Software: EG&G Ortec ACE 4-B1 and ACE 2-B1, EG&G Ortec, Oak Ridge, Tennessee.

6.8. Maestro Multichannel Analyzer Software: EG&G Ortec A63-B2/A63-B4, EG&G Ortec, Oak Ridge, Tennessee.

6.9. Master Library Software: EG&G Ortec A53, EG&G Ortec, Oak Ridge, Tennessee.

6.10. Application Manager Software: EG&G Ortec A18, EG&G Ortec, Oak Ridge, Tennessee.

6.11. GeLiGam Gamma-Ray Analysis Software: EG&G Ortec A30-B1, EG&G Ortec, Oak Ridge, Tennessee.

6.12. Polyethylene bottles: 500-mL, wide-mouth, VWR series 16126.

7. Reagents

7.1. Nitric acid (concentrated, reagent-grade).

8. Calibration and Standards

8.1. Maintain National Institute of Standards and Technology (NIST) traceability throughout the calibration procedure.

8.2. Determine counter efficiencies for water samples using a 7200-s count of a 500-mL standard prepared from NIST Standard Reference Material (SRM) 4276-B-42, mixed radionuclide solution.

8.3. Check detector energy calibrations each week with NIST SRM 4215-F.

8.4. Take background counts for 3600 s each week.

8.5. Check quality control each week with a NIST SRM 4233-B, ^{137}Cs standard.

9. Procedure

9.1. Sample preparation.

9.1.1. Measure 500 mL of sample into a graduated cylinder and pour into a 500-mL polyethelene bottle.

9.2. Nuclear counting.

9.2.1. Center the 500-mL sample bottle on the face of the Ge(Li) detector.

9.2.2. Accumulate gamma-ray spectra for 3600 s by entering **STARTACQ** after the DOS prompt. See *Application Manager (A18-B1)*, "Examples of Operation," pp. 15-18.

9.2.3. When the sample has completed the counting sequence, enter the following commands after the DOS prompt: **STORE**, **SAMPLE**, **DETECTOR**, **GERPAR**, and **CONVERT**. See *Application Manager (A18-B1)*, "Examples of Operation," p. 27 for **STORE**, pp. 50-51 for **SAMPLE**, pp. 54-57 for **DETECTOR**, pp. 66-76 for **GERPAR**, and pp. 87-88 for **CONVERT**.

10. Calculations

10.1. Calculate the activity of ^{137}Cs in waste water samples using the following equation:

$$A = \frac{C_s - C_b}{Y \times E \times CT \times V \times 2200 \times e^{-\lambda \times t}} ,$$

where
- A = activity (nCi/L),
- C_s = gross counts in the ^{137}Cs peak,
- C_b = background counts,
- Y = gamma yield,
- E = detector efficiency,
- CT = count time (min),
- V = sample volume (L),
- 2200 = factor to convert dpm to nCi,
- e = natural log of 2 (0.693),
- λ = 0.693/^{137}Cs half-life (days), and
- t = decay time (days).

10.2. Calculate the uncertainty in the activity of ^{137}Cs using the following equation:

$$U = 1.96 \times A \times \sqrt{\frac{C_s + C_b}{(C_s - C_b)^2} + 0.0225} ,$$

where
- U = uncertainty in ^{137}Cs activity,
- 1.96 = constant,
- A = activity (nCi/L),
- C_s = gross counts in the ^{137}Cs peak,
- C_b = background counts, and
- 0.0225 = constant.

10.3. Quality assurance materials from NIST must have the correct reference date for decay purposes. Data for the ^{137}Cs standard are shown below.

Standard	Decay Date	Certified Value
NIST SRM 4233-B	12/10/85	180 ± 30 nCi/L

10.4. Identify the ^{137}Cs peak and calculate the concentration using the procedure described in *GeLiGam (A30-B1) Gamma-Ray Analysis*. Enter the following commands after the DOS prompt: **AN1**, **AN2**, and **RPT**. See pp. 58-61 for **AN1**, pp. 61-62 for **AN2**, and pp. 63-67 for **RPT**.

11. Source Material

11.1. *Application Manager (A18-B1)*, "Examples of Operation" (EG&G Ortec, Oak Ridge, Tennessee, 1987).

11.2. *GeLiGam (A30-B1) Gamma-Ray Analysis* (EG&G Ortec, Oak Ridge, Tennessee, 1986).

CESIUM (RADIOACTIVE) IN WASTE WATER — PHOSPHOMOLYBDATE PROCEDURE

Analyte: Cesium (radioactive)	**Method No.:** WR130
Matrix: Waste water	**Minimum Detectable Activity:** 7 pCi/sample
Procedure: Coprecipitation and gross beta counting	**Accuracy and Precision:** (mean ± 1 sigma 98% ± 5% at the 1-nCi level
	Acceptable Minimum Detectable Activity: ^{137}Cs: 20 nCi/L ^{134}Cs: 9 nCi/L
Effective Date: 01/01/84 to 01/21/86	**Author:** Terry D. Filer

SAFETY NOTE: Before beginning this procedure, read all of the Material Safety Data Sheets for the chemicals listed in Sec. 7. Read Sec. 4.3 of the EM-9 Safety Manual for information on personal protective clothing and equipment.

1. Principle of Method

1.1. Cesium carrier is added to the aqueous sample.

1.2. Cesium is collected as the phosphomolybdate.

1.3. Cesium is purified as Cs_2PtCl_6 for gross beta counting.

2. Sensitivity

2.1. Sensitivity is limited by the counter background.

2.2. For routine measurements with a 30-min counting period and a counting efficiency of 30%, the minimum detection limit is 7 pCi/sample.

3. Accuracy and Precision

3.1. Average recovery of ^{137}Cs tracer added to a waste water sample and corrected for yield is 98% ± 5% at the 1-nCi level.

4. Interferences

4.1. Cesium-134 is an interference in the determination of ^{137}Cs. If ^{134}Cs is suspected to be present in the sample, the $^{134}Cs/^{137}Cs$ ratio should be determined by gamma spectrometry.

5. Storage of Samples

5.1. Acidify liquid waste samples to approximately 1.0% with HNO_3 before analysis.

5.2. Complete analysis within 6 months.

6. Apparatus

6.1. Canberra 2400 Alpha/Beta/Gamma System: Canberra Industries, Inc., Meriden, Connecticut.

6.2. Microprism printer: IDS Model 480.

6.3. Centrifuge: Damon/IEC Division. IEC UV Centrifuge.

6.4. Filter paper: GF/C, 2.4-cm-diam, Whatman.

6.5. Filter paper: 15.0-cm-diam, 2V prefolded, Whatman.

6.6. Filtering chimney: 2.4-cm-diam, stainless steel.

6.7. Hot plate stirrer: Corning Model PC-351.

6.8. Stirring bars: 1-in., Teflon-coated.

6.9. Centrifuge tubes: 50- and 100-mL.

6.10. Blast lamp: Fisher Scientific.

6.11. Suction flask: 1000-mL.

6.12. Graduated cylinder: 500-mL.

6.13. Beakers: 600-mL.

7. Reagents

7.1. Cesium carrier (10 mg/mL). Dissolve 12.66 g CsCl in distilled water and dilute to 1 L.

7.2. $(NH_4)_3 PMo_{12}O_{40}$. Bio-Rad, Amp-1.

7.3. H_2PtCl_6 (0.1 M). Dissolve 5.18 g of H_2PtCl_6 in distilled water and dilute to 100 mL.

7.4. Calcium chloride (3 M). Dissolve 441 g of $CaCl_2 \bullet 2H_2O$ in distilled water and dilute to 1000 mL.

7.5. Ammonium hydroxide (6 N). Dissolve 240 g of NH_4OH in distilled water. Dilute to 1000 mL. Store in a polyethylene bottle.

7.6. Hydrochloric acid (1 N). Add 87 mL of concentrated HCl to 500 mL of distilled water. Dilute to 1 L.

7.7. Ethanol, 95%.

7.8. Hydrochloric acid (6 N). Add 522 mL of concentrated HCl to 500 mL of water. Dilute to 1 L.

8. Calibration and Standards

8.1. Cesium-137 tracer.

8.1.1. The ^{137}Cs standard solution was obtained from the National Institute of Standards and Technology (NIST SRM 4233-B).

8.1.2. Prepare the tracer solution in 1 M HCl at a concentration of approximately 1 nCi/mL.

8.2. Calibration of the Alpha/Beta/Gamma System.

8.2.1. Accumulate calibration counts for 30 min. Determine the efficiency of the counter by counting a series of $CsPtCl_6$ precipitates that were prepared using the ^{137}Cs tracer.

8.2.2. Count the background for 30 min using $CsPtCl_6$ precipitates without ^{137}Cs tracer.

9. Procedure

9.1. Place 500 mL of sample in a 600-mL beaker. Add 5 mL of concentrated HCl and 1 mL of cesium carrier.

9.2. Slowly add 1 g $(NH_4)_3 PMo_{12}O_{40}$ and stir for 30 min using a magnetic stirrer. Allow the precipitate to settle for at least 4 h and discard the supernate.

9.3. Slurry the precipitate into a centrifuge tube. Centrifuge and discard the supernate.

9.4. Wash the precipitate with 20 mL of 1 N HCl. Centrifuge and discard the supernate.

9.5. Dissolve the precipitate with the dropwise addition of 3 to 5 mL of 6 N NaOH. Heat over a flame for several minutes to remove ammonium ions. Dilute to 20 mL with water.

9.6. Add 10 mL of 3 M $CaCl_2$ and adjust to pH 7 with 6 N HCl to precipitate $CaMoO_4$. Stir, centrifuge, and filter the supernate through Whatman 15-cm-diam, 2V prefolded filter paper into a 100-mL centrifuge tube.

9.7. Wash the precipitate remaining in the centrifuge tube with 10 mL of water. Filter through the same filter paper and combine the wash with the filtrate. Discard the filter paper.

9.8. Add 2 mL of 0.1 M H_2PtCl_6 and 5 mL of ethanol. Cool and stir in an ice bath for 10 min.

9.9. Transfer with water to a tared, Whatman GF/C, 2.4-cm-diam, glass fiber filter. Wash with successive aliquots of water, 1 N HCl, and ethanol.

9.10. Dry, cool, weigh, and mount the sample. Submit for beta counting.

10. Operation of Equipment

10.1. Refer to the *Alpha/Beta/Gamma System Model 2400 Operator's Manual.*

11. Calculations

11.1. Determine the chemical recovery.

$$RF = \frac{CsR}{0.0254} ,$$

where RF = recovery factor for Cs carrier,
CsR = Cs_2PtCl_6 recovered (g), and
0.0254 = constant.

11.2. Determine the concentration of radioactive Cs in the sample.

$$D = \frac{C_s - C_b}{CT \times 2.22 \times E \times V \times RF} ,$$

where D = cesium activity (pCi/L),
C_s = counts of sample,
C_b = counts of background,
CT = counting time (min),
2.22 = conversion factor,
E = counter efficiency,
V = sample volume (L), and
RF = recovery factor.

11.3. The uncertainty is calculated, at the 95% confidence level, by propagation of errors.

Symbol	Value	% Uncertainty
C_s	Variable	Variable
C_b	2 to 3 cpm	6 to 20
CT	30 min	0.1
E	.30	6.7
V	.5 L	1
RF	.70 to .80	3

11.3.1. The uncertainty U is

$$U = 1.96 \times D \sqrt{\frac{C_s + C_b}{(C_s - C_b)^2} + .0055} ,$$

where U = uncertainty,
1.96 = constant,
D = cesium activity (pCi/L),
C_s = counts of sample,
C_b = counts of background, and
0.0055 = constant.

12. Source Material

12.1. H. L. Krieger, *Radiochemical Methodology for Drinking Water* EPA-600/4-75-008, (Environmental Monitoring and Support Laboratory, Office of Research and Development, US Environmental Protection Agency, Cincinnati, Ohio, 1975), pp. 4-5.

12.2. *Alpha/Beta/Gamma System Model 2400 Operator's Manual* (Canberra Industries, Inc., Meriden, Connecticut, 1987).

GAMMA ACTIVITY IN WASTE WATER — GAMMA SPECTROMETRY WITH LITHIUM-DRIFTED GERMANIUM DETECTOR

Analyte: Cobalt-57, cobalt-60, cesium-134, manganese-54, sodium-22, and any other gamma-emitting nuclide present in concentrations >1 nCi/L	**Method No.:** WR140
Matrix: Waste water	**Minimum Detectable Activity:** ^{57}Co 390 pCi/L ^{7}Be 3.7 nCi/L ^{134}Cs 350 pCi/L ^{54}Mn 400 pCi/L ^{60}Co 500 pCi/L ^{22}Na 420 pCi/L
Procedure: Gamma spectrometry with Ge(Li) detector	**Accuracy and Precision:** (mean ± 1 sigma) ^{57}Co 110% ± 7% ^{7}Be 98% ± 18% ^{134}Cs 100% ± 7% ^{54}Mn 92% ± 9% ^{60}Co 103% ± 12% ^{22}Na 104% ± 6% **Acceptable Minimum Detectable Activity:** ^{57}Co 500 nCi/L ^{7}Be 2 μCi/L ^{134}Cs 9 nCi/L ^{54}Mn 100 nCi/L ^{60}Co 50 nCi/L ^{22}Na 40 nCi/L
Effective Date: 12/20/85	**Author:** Terry D. Filer

SAFETY NOTE: Before beginning this procedure, read all of the Material Safety Data Sheets for the chemicals listed in Sec. 7. Read Sec. 4.3 of the EM-9 Safety Manual for information on personal protective clothing and equipment.

1. Principle of Method

1.1. The waste water sample is scanned for gamma-emitting nuclides with energies between 0 and 3,000 keV. Quantitative data are obtained by calculation of net gamma-ray peak areas at the energies of the nuclide being determined.

2. Sensitivity

2.1. Sensitivity is limited by counter background and self-absorption in the sample.

2.2. For routine measurements with a 3,600-s counting period and counting efficiencies from 0.10% to 1.3%, the minimum detection limits (the 95th percentile of the background distribution) for the various isotopes are listed below.

Nuclide	Energy (keV)	Detector Efficiency	Detection Limit
^{57}Co	122	1.03	390 pCi/L
^{7}Be	478	0.33	3.7 nCi/L
^{134}Cs	605	0.25	350 pCi/L
^{54}Mn	835	0.18	400 pCi/L
^{60}Co	1173	0.13	500 pCi/L
^{22}Na	1275	0.12	420 pCi/L

3. Accuracy and Precision

3.1. The precision of the analysis of waste water samples is limited by a low peak/background ratio. Values are reported with a minimum 15% uncertainty unless this percentage is exceeded by that based upon standard counting statistics.

3.2. Calculate routine performance data by dividing the EM-9 result on each individual QC analysis by the certified value for each material. Summarize these data by calculating a mean ratio ± 1 standard deviation, as shown below.

Nuclide	Mean ± 1 SD
^{57}Co	1.10 ± 0.07
^{7}Be	0.98 ± 0.18
^{134}Cs	1.00 ± 0.07
^{54}Mn	0.92 ± 0.09
^{60}Co	1.03 ± 0.12
^{22}Na	1.04 ± 0.06

4. Interferences

4.1. Nuclides interfere with each other when gamma energies are so close that more than one photon is included in the energy window. For example, ^{154}Eu

interferes with the ^{57}Co photopeak at 122 keV and the ^{22}Na photopeak at 1,275 keV. This interference can sometimes be corrected by using noninterfering lower-yield photopeaks.

5. Collection and Storage of Samples

5.1. Acidify samples to 1% with HNO_3 soon after collection.

6. Apparatus

6.1. Graduated cylinder: 500-mL.

6.2. Gamma-ray spectrometer: equipped with Ge(Li) detector, Princeton Gamma-Tech, Princeton, New Jersey.

6.3. Spectroscopy amplifier and gated integrator: EG&G Ortec Model 673, EG&G Ortec, Oak Ridge, Tennessee.

6.4. Computer: IBM XT, IBM Corp., Boca Raton, Florida.

6.5. Monitor: IBM Enhanced Color Display, IBM Corp., Boca Raton, Florida.

6.6. IBM proprinter: IBM Corp., Boca Raton, Florida.

6.7. Multichannel Analyzer Software: EG&G Ortec ACE 4-B1 and ACE 2-B1, EG&G Ortec, Oak Ridge, Tennessee.

6.8. Maestro Multichannel Analyzer Software: EG&G Ortec A63-B2/A63-B4, EG&G Ortec, Oak Ridge Tennessee.

6.9. Master Library Software: EG&G Ortec A53, EG&G Ortec, Oak Ridge, Tennessee.

6.10. Application Manager Software: EG&G Ortec A18, EG&G Ortec, Oak Ridge, Tennessee.

6.11. GeLiGam Gamma-Ray Analysis Software: EG&G Ortec A30-B1, EG&G Ortec, Oak Ridge, Tennessee.

6.12. Polyethylene bottles: 500-mL, wide-mouth, VWR series 16126.

7. Reagents

7.1. Nitric acid (concentrated, reagent-grade).

8. Calibration and Standards

8.1. Maintain National Institute of Standards and Technology (NIST) traceability throughout the calibration procedure.

8.2. Each week prepare a detector efficiency vs energy calibration and a channel vs energy calibration for water samples using a 3,600-s count of 500-mL standards prepared from NIST Standard Reference Material (SRM) 4276-B-42, mixed radionuclide solution.

8.2.1. The procedure for calibration of the detector is described in the *GeLiGam (A30-B1) Gamma-Ray Analysis* software manual, pp. 19-39.

8.3. Take background counts of 3,600 s each week.

8.4. Check detector energy calibrations each week with NIST SRM 4215-F.

8.5. Check QC each week with a mixed Environmental Protection Agency (EPA) standard that contains the following:

^{57}Co (EPA 2178-2-56),
^{7}Be (EPA 2309-1),
^{134}Cs (EPA 2180-2-55),
^{54}Mn (EPA 2163-2),
^{60}Co (EPA 2070-3), and
^{22}Na (EPA 2016-4).

9. Procedure

9.1. Sample preparation.

9.1.1. Measure 500 mL in a graduated cylinder and pour into a 500-mL plastic bottle.

9.2. Nuclear counting.

9.2.1. Center the 500-mL sample bottle on the face of the Ge(Li) detector.

9.2.2. Accumulate gamma-ray spectra for 3,600 s by entering **STARTACQ** after the DOS prompt. See *Application Manager (A18-B1)*, "Examples of Operation," pp. 15-18.

9.2.3. When the sample has completed the counting sequence, enter the following commands after the DOS prompt: **STORE**, **SAMPLE**, **DETECTOR**, **GERPAR**, and **CONVERT**. See *Application Manager (A18-B1)*, "Examples of Operation," p. 27 for **STORE**, pp. 50-51 for

SAMPLE, pp. 54-57 for **DETECTOR**, pp. 66-76 for **GERPAR**, and pp. 87-88 for **CONVERT**.

10. Calculations

10.1. Calculate the activity of the particular nuclide being measured using the following formula:

$$A = \frac{C_s - C_b}{e^{-\lambda t} \times Y \times E \times CT \times V \times 2.22} ,$$

where A = activity (pCi/L),
C_s = gross counts in the nuclide peak,
C_b = background counts,
e = natural log of 2 (0.693)
λ = 0.693/(nuclide half-life in days),
t = decay time (days),
Y = gamma yield,
E = detector efficiency,
CT = count time (min),
V = volume (L), and
2.22 = constant.

10.2. Calculate the uncertainty at the 95% confidence level for activity of the nuclide using the following formula:

$$1.96 \times A \times \sqrt{\frac{C_s + C_b}{(C_s - C_b)^2} + 0.0225} ,$$

where 1.96 = constant,
A = activity (pCi/L),
C_s = gross counts in the nuclide peak,
C_b = background counts, and
0.0225 = constant.

10.3. Identify the nuclides and calculate concentrations using the procedure described in *GeLiGam (A30-B1) Gamma-Ray Analysis*. Enter the following commands after the DOS prompt: **AN1**, **AN2**, and **RPT**. See pp. 58-61 for **AN1**, pp. 61-62 for **AN2**, and pp. 63-67 for **RPT**.

10.4. Quality control materials from NIST and EPA must have the correct reference date for decay purposes.

10.4.1. For NIST SRM 4276-B-42, decay date is 1200 EST May 1, 1983.

Nuclide	Energy (keV)	Certified Value (gamma/s)
^{155}Eu	86.6	5226.0
^{155}Eu	105.3	3610.0
^{154}Eu	123.1	12483.0
^{125}Sb	176.4	1345.0
^{154}Eu	248.0	2116.0
^{125}Sb	380.5	297.9
^{125}Sb	427.9	5843.0
^{125}Sb	463.4	2055.0
^{125}Sb	600.6	3471.0
^{125}Sb	635.9	2218.0
^{154}Eu	723.3	6144.0
^{154}Eu	873.2	3731.0
^{154}Eu	1004.8	5537.0
^{154}Eu	1274.4	10671.0
^{154}Eu	1596.5	542.4

10.4.2. EPA quality control materials.

Standard	Nuclide	Decay Date	Certified Value (nCi/L)
EPA 2178-2-56	^{57}Co	12/10/85	40 ± 6
EPA 2309-1	^{7}Be	12/10/85	120 ± 20
EPA 2180-2-55	^{134}Cs	12/10/85	51 ± 8
EPA 2163-2	^{54}Mn	12/10/85	55 ± 8
EPA 2070-3	^{60}Co	12/10/85	25 ± 4
EPA 2016-4	^{22}Na	12/10/85	32 ± 5

11. Source Material

11.1. *Analytical Chemistry Branch Procedures Manual*, L. Z. Bodnar and D. R. Percival, Eds. (Radiological and Environmental Sciences Laboratory, US Department of Energy, Idaho Falls, Idaho, 1982).

11.2. *Multichannel Analyzer Software (ACE4-B1 and ACE2-B1) Operator's Manual* (EG&G Ortec, Oak Ridge, Tennessee, 1986).

11.3. *GeLiGam (A30-B1) Gamma-Ray Analysis* (EG&G Ortec, Oak Ridge, Tennessee, 1986).

11.4. *Application Manager (A18-B1)*, "Examples of Operation" (EG&G Ortec, Oak Ridge, Tennessee, 1987).

GROSS ALPHA, BETA, AND GAMMA ACTIVITY IN WASTE WATER, FILTER CAKE, AND ORGANIC MATERIALS — GAS-FLOW PROPORTIONAL COUNTING

Analyte: Alpha-, beta-, and/or gamma-emitting nuclides	**Method No.:** WR150
Matrix: Waste water, filter cake, and organics	**Minimum Detectable Activity:** Alpha 0.3 pCi/sample Beta 0.7 pCi/L Gamma 35 pCi/sample
Procedure: Alpha and beta counting with gas-flow proportional counter. Gamma counting with NaI detector.	**Accuracy and Precision:** (mean ± 1 sigma) Alpha 105% ± 5% at the 30-pCi level Beta 100% ± 3% at the 90-pCi level **Acceptable Minimum Detectable Activity:** Alpha 30 pCi/L Beta 300 pCi/L Gamma 10 nCi/L
Effective Date: 01/14/86	**Author:** Terry D. Filer

SAFETY NOTE: Before beginning this procedure, read all of the Material Safety Data Sheets for the chemicals listed in Sec. 7. Read Sec. 4.3 of the EM-9 Safety Manual for information on personal protective clothing and equipment.

1. Principle of Method

1.1. This procedure is for screening samples for gross alpha, beta, and/or gamma activity in water solution samples, filter cake samples, or organic samples.

1.2. Filter cake samples are dried and digested with $HNO_3 \bullet HF$.

1.3. Five mL of water solution samples, 5 mL of digested filter cake samples, or 2 mL of organic liquid are evaporated to dryness on a stainless steel planchet and heated to a dull red color.

1.4. The planchets are counted in a Canberra 2400 Alpha/Beta/Gamma System.

2. Sensitivity

2.1. Sensitivity is limited by the counter background.

2.2. For routine measurements with a 50-min counting period and counting efficiencies of approximately 20% for alpha, 30% for beta, and 6% for gamma determinations, the minimum detection limit (the 95th percentile of the background distribution) is 0.3 pCi/sample for alpha, 0.7 pCi/sample for beta, and 35 pCi/sample for gamma activity. The efficiency for alpha analysis is based on a $^{239}Pu/^{238}Pu$ source. The efficiency for beta analysis is based on a $^{90}Sr/^{90}Y$ source. The efficiency for gamma analysis is based on a $^{137}Cs/^{137m}Ba$ source.

3. Accuracy and Precision

3.1. Routine performance data are calculated by dividing the result on each individual QC analysis by the certified value and are summarized by calculating a mean ratio ± 1 standard deviation.

3.2. The mean value of the ratio of the QC result compared with the certified value for a ^{233}U standard (alpha activity) is equal to 105% ± 5% at the 30-pCi level.

3.3. The mean value of the ratio of the QC result compared with the certified value for a $^{90}Sr/^{90}Y$ standard (beta activity) is equal to 100% ± 3% at the 90-pCi level.

3.4. No QC standards are available for gross gamma activity.

4. Interferences

4.1. High salt content in the dried water solutions causes self-adsorption and scattering in the determination of gross alpha activity. However, because this process is only a screening procedure, no correction is made for high salt content.

4.2. Some radioactivities, such as that of the selenium or cesium radioisotopes, may be lost when samples are heated to a dull red color. Such losses are limitations of the test method.

5. Collection and Storage of Samples

5.1. Acidify waste water samples to 1% with HNO_3.

5.2. No treatment is given to filter cake samples or organic samples before analysis.

6. Apparatus

6.1. Canberra 2400 Alpha/Beta/Gamma System: Canberra Industries, Inc., Meriden, Connecticut.

6.2. Planchets: stainless steel, concentric 2-in. by .125-in., Atomic Product Corporation, stock no. 129-019, Shirley, New York 11967.

6.3. Pipette: 5-mL volumetric.

6.4. Hot plate: adjustable from 10°F above ambient temperature to 700°F.

6.5. K.S.E. glove box: equipped with a Blue M Infra oven and an Ainsworth electronic balance (0.00- to 200.00-g capacity).

6.6. Flasks: 100-mL, volumetric.

7. Reagents

7.1. Hydrofluoric acid (concentrated, 48%).

7.2. Nitric acid (concentrated, 70%).

7.3. Nitric acid (12 M) • hydrofluoric acid (1 M). Mix 1536 mL of concentrated HNO_3, 67 mL of concentrated HF, and 401 mL of water. Store in a 2000-mL polyethylene bottle.

7.4. Nitric acid. Dilute 1:1.

8. Calibration and Standards

8.1. Alpha standard for efficiency determinations.

8.1.1. Use a $^{239}Pu/^{238}Pu$ secondary standard that has been standardized against National Institute of Standards and Technology (NIST) Standard Reference Material (SRM) 995, ^{233}U, to calculate the alpha efficiency of the counter.

8.1.2. Check alpha efficiency each week by drying 5 mL of the $^{239}Pu/^{238}Pu$ secondary standard on a stainless steel planchet and counting the sample for 5 min.

8.2. Beta standard for efficiency determinations.

8.2.1. Use the $^{90}Sr/^{90}Y$ stock solution from NIST SRM 4919-E.

8.2.2. Prepare the standard solution in 4 M HNO_3.

8.2.3. Check beta efficiency each week by drying 5 mL of the $^{90}Sr/^{90}Y$ primary standard on a stainless steel planchet and counting the sample for 5 min.

8.3. Gamma standard for efficiency determinations.

8.3.1. Prepare the standard from a $^{137}Cs/^{137m}Ba$ primary standard (NIST SRM 4233-B).

8.3.2. Check gamma efficiency each day by drying 5 mL of the $^{137}Cs/^{137m}Ba$ primary standard on a stainless steel planchet and counting the sample for 50 min.

8.4. Quality control standard.

8.4.1. Prepare a quality control standard from a mixture of ^{233}U (NIST SRM 995) and $^{90}Sr/^{90}Y$ (NIST SRM 4919-E).

8.4.2. Dry 5 mL of the quality control standard on a stainless steel planchet and count each day for 50 min.

8.5. Backgrounds.

8.5.1. The blank consists of a stainless steel planchet, 2-in. by .125-in.

8.5.2. Count the blank each day for 100 min to determine the background count rate of the counter.

8.6. Chi-square tests.

8.6.1. The chi-square test is a good indication of any intermittent instrument problem. Check each week on alpha and beta standards. See the *Alpha/Beta/Gamma System Model 2400 Operator's Manual*, p. 48.

8.7. Instrument plateaus.

8.7.1. Check the operating voltage for alpha and beta counting when alpha and/or beta chi-square tests or efficiencies become erratic. Use the **PLATEAU** function on the Canberra 2400. See the *Alpha/Beta/Gamma System Model 2400 Operator's Manual*, p. 47.

9. Procedure

9.1. Waste water samples.

9.1.1. Dry 5 mL of the sample on a stainless steel planchet. Heat to a dull red color.

9.1.2. Count samples for 50 min in the Canberra 2400 Alpha/Beta/Gamma System.

9.2. Filter cake.

9.2.1. Place 0.5 g of dried filter cake into a 150-mL beaker. Dry and weigh the sample in a glove box.

9.2.2. Add 20 mL of 12 M HNO_3 • 1 M HF to the sample. Cover with a watch glass and digest for 20 min on a hot plate.

9.2.3. Remove the sample from the hot plate, and carefully decant the supernate into a 100-mL volumetric flask.

9.2.4. Add 20 mL of 12 M HNO_3 • 1 M HF to the remaining residue in the 150-mL beaker. Cover with a watch glass and digest for 20 min on a hot plate.

9.2.5. Remove the sample from the hot plate and carefully decant the supernate into the 100-mL volumetric flask containing the first digestion.

9.2.6. Add 10 mL of 1:1 HNO_3 to the remaining residue in the 150-mL beaker. Cover with a watch glass and digest for 10 min on a hot plate.

9.2.7. Remove the sample from the hot plate and carefully decant the supernate into the 100-mL volumetric flask.

9.2.8. Dilute the combined solution from the three digestions to volume with 1:1 HNO_3.

9.2.9. Dry 5 mL of the digested filter cake on a stainless steel planchet. Heat to a dull red color.

9.2.10. Count the sample in the Canberra 2400 Alpha/Beta/Gamma System for 10 min.

9.3. Organic samples.

9.3.1. Dry 2 mL of the organic liquid on a stainless steel planchet. Heat to a dull red color.

9.3.2. Count samples for 50 min in the Canberra 2400 Alpha/Beta/Gamma System.

10. Operation of Equipment

10.1. Refer to the *Alpha/Beta/Gamma System Model 2400 Operator's Manual.*

11. Calculations

11.1. Crosstalk.

11.1.1. Crosstalk is the condition where alpha events are counted in the beta channel or beta events are counted in the alpha channel. It only occurs in simultaneous alpha/beta counting.

11.1.2. The system should be set up so that less than 1% of the beta events are counted in the alpha channel. This is accomplished by varying the disc window values and the operating voltage values in the user program (as described on p. 47 of the *Alpha/Beta/Gamma System Model 2400 Operator's Manual*).

11.1.3. The alpha crosstalk is found by counting a pure alpha emitter such as the $^{239}Pu/^{238}Pu$ secondary standard. The alpha crosstalk percentage is calculated by dividing the beta channel counts by the alpha channel counts and multiplying by 100.

11.2. Counting efficiency.

11.2.1. Determine the alpha counting efficiency of the counter using the following equation:

$$EF_a = \frac{100 \times \left(\frac{R_a}{t_o} - B_a\right)}{A_a} ,$$

where EF_a = alpha counting efficiency (%),
100 = factor to convert to percentage,
R_a = total counts in alpha channel,
t_o = sample count time,
B_a = alpha background count rate (cpm), and
A_a = activity of alpha standard (dpm).

11.2.2. Determine the beta counting efficiency of the counter using the following equation:

$$EF_b = \frac{100 \times \left(\frac{R_b}{t_o} - B_b\right)}{A_b} ,$$

where EF_b = beta counting efficiency,
100 = factor to convert to percentage,
R_b = total counts in beta channel,
t_o = sample count time,
B_b = beta background count rate (cpm), and
A_b = activity of beta standard (dpm).

11.2.3. Determine the gamma counting efficiency (EF_g) of the counter using the following equation:

$$EF_g = \frac{100 \times \left(\frac{R_g}{t_o} - B_g\right)}{A_g} ,$$

where EF_g = gamma counting efficiency,
100 = factor to convert to percentage,
R_g = total counts in gamma channel,
t_o = sample count time,
B_g = gamma background count rate (cpm), and
A_g = activity of gamma standard (dpm).

11.2.4. Standard deviation of counting efficiencies. The standard deviation of the alpha, beta, and gamma counting efficiencies is determined experimentally from the instrument efficiencies measured over a period of several months.

11.3. Net count calculations. At the end of each counting cycle the net counts and net count error are calculated for the alpha and beta channels. The net count is the counts/min with background subtracted and an alpha crosstalk correction performed.

This calculation is performed automatically by the instrument when the appropriate values for alpha and beta background, alpha crosstalk, background collection time, and error value are stored in the user program.

11.3.1. The equation for net count in the alpha channel is

$$N_a = \frac{R_a}{t_o} - B_a ,$$

where N_a = the net alpha count rate (cpm),
R_a = total counts in the alpha channel,

t_o = sample count time, and
B_a = alpha background count rate (cpm).

11.3.2. The error calculation for the net alpha counts is

$$EN_a = \sqrt{\left(\frac{N_a}{t_o} + \frac{B_a}{t_b}\right) \times E_s} \quad ,$$

where EN_a = alpha channel net count rate error,
N_a = the net alpha count rate (cpm),
t_o = sample count time,
B_a = alpha background count rate (cpm),
t_b = background count time, and
E_s = error value from user program, usually 1.96.

11.3.3. The equation for net counts in the beta channel becomes slightly more complex due to the alpha crosstalk factor. This equation is

$$N_b = \frac{R_b}{t_o} - B_b - \left(N_a \times \frac{X}{100}\right) \quad ,$$

where N_b = net beta count rate (cpm),
R_b = total counts in the beta channel,
t_o = sample count time,
B_b = beta background count rate (cpm),
N_a = the net alpha count rate (cpm), and
X = alpha crosstalk.

11.3.4. The error calculation for the net beta count is

$$EN_b = \sqrt{\left(E_s \times \sqrt{\frac{N_b}{t_o} + \frac{B_b}{t_b}}\right)^2 + \left(X \times \frac{EN_a}{100}\right)^2} \quad ,$$

where EN_b = error for net beta count,
E_s = error value from user program, usually 1.96,
N_b = net beta count rate (cpm),
t_o = sample count time,
B_b = beta background count rate (cpm),
t_b = background count time,

X = alpha crosstalk,
EN_a = alpha channel net count rate error, and
100 = constant.

11.3.5. The equation for net counts in the gamma channel is

$$N_g = \frac{R_g}{t_o} - B_g \quad ,$$

where N_g = net gamma count rate (cpm),
R_g = total counts in the gamma channel,
t_o = sample count time, and
B_g = gamma background count rate (cpm).

11.4. Concentration calculations. The concentration and concentration-error calculations are performed at the end of each counting cycle. The activity of the sample is in pCi per unit volume.

For these calculations to be performed automatically by the instrument, the additional values of alpha and beta efficiency and sample volume must also be stored in the user program. Calculations for gamma concentrations must be done by hand.

11.4.1. The equation for concentration in the alpha channel is

$$C_a = \frac{100 \times N_a}{2.22 \times V \times EF_a} \quad ,$$

where C_a = concentration for alpha (pCi/volume),
100 = constant,
N_a = the net alpha count rate (cpm),
2.22 = factor to convert dpm to pCi,
V = sample volume, and
EF_a = alpha efficiency (%).

11.4.2. The error value for the alpha concentration is

$$EC_a = \frac{100 \times EN_a}{2.22 \times EF_a \times V} \quad ,$$

where EC_a = the alpha concentration error,
100 = constant,
EN_a = alpha channel net count rate error,
2.22 = factor to convert dpm to pCi,
EF_a = alpha counting efficiency, and
V = sample volume.

11.4.3. The beta concentration calculation is

$$C_b = \frac{100 \times N_b}{2.22 \times EF_b \times V} ,$$

where C_b = the beta concentration (pCi/volume),
100 = constant,
N_b = net beta count rate (cpm),
2.22 = factor to convert dpm to pCi,
EF_b = beta counting efficiency, and
V = sample volume.

11.4.4. The error value for the beta concentration is

$$EC_b = \sqrt{\left(\frac{EN_b}{EF_b}\right)^2 + \frac{\left(X \times \frac{EN_a}{100 \times EF_a}\right)^2}{2.22 \times V}} ,$$

where EC_b = the beta concentration error,
EN_b = error for net beta count,
EF_b = beta counting efficiency,
X = alpha crosstalk,
EN_a = alpha channel net count rate error,
100 = constant,
EF_a = alpha counting efficiency,
2.22 = factor to convert dpm to pCi, and
V = sample volume.

11.4.5. The gamma concentration calculation is

$$C_g = \frac{100 \times N_g}{2.22 \times EF_g \times V} ,$$

where C_g = the gamma concentration (pCi/volume),
100 = constant,
N_g = net gamma count rate (cpm),
2.22 = factor to convert dpm to pCi,
EF_g = gamma counting efficiency, and
V = sample volume.

11.4.6. The error value for the gamma concentration is

$$EC_g = 2 \times \sqrt{\frac{N_g}{t_o} + \frac{B_g}{t_b}} ,$$

where EC_g = the gamma concentration error.
2 = constant,
N_g = net gamma count rate (cpm),
t_o = sample count time,
B_g = gamma background count rate (cpm), and
t_b = background count time.

12. Source Material

12.1. *Alpha/Beta/Gamma System Model 2400 Operator's Manual* (Canberra Industries, Inc., Meriden, Connecticut, 1987).

GROSS GAMMA ACTIVITY IN LIQUID WASTE WATER — NAI DETECTOR

Analyte: Gamma-emitting nuclides	**Method No.:** WR160
Matrix: Waste water	**Minimum Detectable Activity:** 2 nCi/L
Procedure: Gamma counting with NaI Detector	**Accuracy and Precision:** (mean ± 1 sigma) 100% ± 1%
	Acceptable Minimum Detectable Activity: 10 nCi/L
Effective Date: 01/13/86 to 02/14/89	**Author:** Terry D. Filer

SAFETY NOTE: Before beginning this procedure, read all of the Material Safety Data Sheets for the chemicals listed in Sec. 7. Read Sec. 4.3 of the EM-9 Safety Manual for information on personal protective clothing and equipment.

1. Principle of Method

1.1. This screening procedure is for the determination of gross gamma activity in a 2-mL water sample.

1.2. Samples are counted in a NaI well counter for 30 min.

2. Sensitivity

2.1. Sensitivity is limited by the counter background and the small sample volume.

2.2. For routine measurements with a 60-min counting period and a counting efficiency of 23%, the minimum detection limit (the 95th percentile of the background distribution) is 2 nCi/L.

3. Accuracy and Precision

3.1. Routine performance data were obtained by dividing the result of each individual QC analysis by the certified value for each material and calculating a mean ratio ± 1 standard deviation. The National Bureau of Standards (NBS) Standard Reference Material (SRM) 4223-B, ^{137}Cs, was used and gave a mean value of 100% ± 1%.

4. Interferences

4.1. None.

5. Collection and Storage of Samples

5.1. Acidify waste water samples to approximately 1% with HNO_3.

6. Apparatus

6.1. Gamma counter: 4-in.-diam by 6-in.-diam NaI well-type scintillation detector equipped with a Canberra Model No. 1772 counter/timer.

6.2. Culture tubes: disposable, 13- by 100-mm, VWR Catalog No. 60825-924. VWR Scientific, Los Alamos, New Mexico.

7. Reagents

7.1. Nitric acid (concentrated, reagent-grade).

8. Calibration and Standards

8.1. Prepare the liquid ^{137}Cs standard by adding 2 mL of NBS SRM 4233-B to a 13- by 100-mm test tube.

8.2. Count the standard each day and calculate the efficiency of the counter.

8.3. The liquid blank consists of 2 mL of a 1% HNO_3 solution.

8.3.1. Count the blank each day for 60 min and use the data to compute the background count rate of the counter.

9. Procedure

9.1. Pipette 2 mL of sample into a 13- by 100-mm test tube.

9.2. Clean off any exterior contamination.

9.3. Insert the sample into the NaI detector well.

9.4. Count influent samples for 10 min and effluent samples for 30 min.

10. Operation of Equipment

10.1. Set the desired count time on the counter/timer and begin the count. See instrument manual for operating instructions.

11. Calculations

11.1. The following factors and their relative uncertainties are used in the calculation of gross gamma activity.

Definition	Factor Symbol	Value	% Uncertainty
Gross count, sample	C_x	Variable	Variable
Blank count	B	160 cpm	1
Counting time, sample	CT	10 to 30 min	0.1
Counting efficiency	CE	0.225	0.5
Sample volume, liters	V	0.002	3
dpm/nCi	MC	2.22×10^3	0

11.2. Counting efficiency.

11.2.1. Calculate the counting efficiency of the counter using the following equation:

$$CE = \frac{(C_s / CT_s) - B}{A_s} ,$$

where CE = efficiency (counts/disintegration),
C_s = gross counts of the standard,
CT_s = counting time, standard (min),
B = background count rate (cpm), and
A_s = activity in the standard (dpm).

11.2.2. The standard deviation of the efficiency was calculated from the instrument over a period of several months.

11.3. Sample activities.

11.3.1. Calculate the activity in the sample in nCi/L using the following equation:

$$A_x = \frac{(C_x / CT) - B}{CE \times V \times MC} ,$$

where A_x = sample activity (nCi/L),
C_x = gross count of sample,
CT = counting time of sample (min),
B = background (cpm),
CE = counting efficiency,
V = sample volume (L), and
MC = 2.22×10^3.

11.3.2. The standard deviation of the activity in the sample at the 95% confidence level is given by

$$S_A = 1.96 \times A_x \times \sqrt{\frac{C_x + CT \times B}{(C_x - CT \times B)^2} + 0.001} ,$$

where S_A = standard deviation of the sample activity,
1.96 = constant,
A_x = sample activity (nCi/L),
C_x = gross count of sample,
CT = sample counting time (min),
B = background (cpm), and
0.001 = constant.

12. Source Material

12.1. *Analytical Chemistry Branch Procedures Manual*, L. Z. Bodnar and D. R. Percival, Eds. (Radiological and Environmental Sciences Laboratory, US Department of Energy, Idaho Falls, Idaho, 1982).

PLUTONIUM, AMERICIUM, AND URANIUM IN WASTE WATER AND FILTER CAKE — ALUMINUM NITRATE/ALIQUAT-336 PROCEDURE

Analyte: Plutonium, americium, and uranium	**Method No.:** WR170
Matrix: Waste water and filter cake	**Minimum Detectable Activity:** Am 0.4 pCi/sample U 0.4 pCi/sample
Procedure: Liquid/liquid extraction, ion exchange, and alpha spectrometry	**Accuracy and Precision:** (mean ± 1 sigma) ^{239}Pu 93% ± 5% ^{238}Pu 99% ± 10% ^{241}Am 96% ± 4% ^{234}U 97% ± 11% ^{235}U 86% ± 14%
	Acceptable Minimum Detectable Activity: 50 pCi/L for waste water
Effective Dates: 12/12/84 to 10/17/88	**Author:** Terry D. Filer

SAFETY NOTE: Before beginning this procedure, read all of the Material Safety Data Sheets for the chemicals listed in Sec. 7. Read Sec. 4.3 of the EM-9 Safety Manual for information on personal protective clothing and equipment.

1. Principle of Method

1.1. Plutonium, americium, and uranium are dissolved in 2.2 M aluminum nitrate.

1.2. Plutonium and uranium are separated from americium by extraction into tricaprylamine nitrate (30% in xylene).

1.3. Plutonium and uranium are stripped from the tricapryl nitrate with a 10% (vol/vol) perchloric acid • 4% (wt/vol) oxalic acid solution.

1.4. Plutonium is separated from uranium by adsorption onto anion exchange resin.

1.5. Plutonium is eluted from the resin with a 0.36 M HCl • 0.01 M HF solution.

1.6. Plutonium, americium, and uranium are coprecipitated with CeF_3, and the alpha activity is determined by alpha pulse-height analysis.

2. Sensitivity

2.1. Sensitivity is limited by the counter background.

2.2. For routine measurements with a 30-min counting period and a counting efficiency of 30%, the minimum detection limit is 0.4 pCi per sample.

3. Accuracy and Precision

3.1. Calculate routine performance by dividing the result of each QC analysis by the certified value for each material, and calculate a mean ratio ± 1 standard deviation.

Nuclide	Mean ± SD
^{239}Pu	0.93 ± 0.05
^{238}Pu	0.99 ± 0.10
^{241}Am	0.96 ± 0.04
^{234}U	0.97 ± 0.11
^{235}U	0.86 ± 0.14

4. Interferences

4.1. Interference to the determination of plutonium and uranium is caused by alpha activity from ^{237}Np.

5. Storage of Samples

5.1. Acidify liquid waste samples to approximately 1% with HNO_3 before analysis.

5.2. No treatment is given to filter cake samples before analysis.

5.3. Complete analyses within 6 months.

6. Apparatus

6.1. Alpha spectrometer: Ortec 576 equipped with a 1024-channel, series 40 analyzer using 450-mm^2 silicon-surface barrier detectors. Alpha spectrometer, EG&G Ortec, Oak Ridge, Tennessee. Multichannel analyzer, Canberra Industries, Inc., Meriden, Connecticut.

6.2. Hot plate: adjustable from 10°F above ambient to 700°F.

6.3. Infrared (IR) heat lamp: 250-watt.

6.4. Ion exchange columns: glass column, 80-mm-long by 10-mm-o.d., with a reservoir at the top, 60-mm-long by 30-mm-o.d.

6.5. Percholoric acid fume hood.

6.6. Glas-Col model S-500 shaker-in-the-round: equipped with shaker shocker model RD-18 and two RD-20 heads. Glas-Col, Terre Haute, Indiana.

6.7. Ash-free analytical filter pulp: VWR Scientific, Los Alamos, New Mexico 87545.

6.8. Filters: glass microfibre, 7.0-cm, Whatman GF/C.

6.9. Crucibles: 25-mL, platinum.

6.10. Blast burner: high-temperature. VWR Scientific, Los Alamos, New Mexico 87545.

6.11. Filter paper: 47-mm, Gelman GA-6. Gelman Instrumental Co., Ann Arbor, Michigan.

6.12. K.S.E. glove box: equipped with a Blue M Infra oven and Ainsworth electronic balance (0.00- to 200.00-g capacity).

6.13. Separatory funnels: 250-mL with Teflon stop cocks and Teflon stoppers.

6.14. Centrifuge tubes: 40-mL, round-bottom, plastic.

6.15. Filters: 25-mm, Gelman HT-200 Tuffryn.

6.16. Funnel: polysulfone twist-lock. Gelman Instrument Co., Ann Arbor, Michigan.

6.17. Steam bath.

6.18. Petri dishes.

7. Reagents

7.1. Hydrochloric acid (concentrated 36%, reagent-grade).

7.2. Hydrochloric acid (6 M). Dilute 500 mL of concentrated HCl to 1 L with distilled water.

7.3. Hydrofluoric acid (concentrated 48%, reagent-grade).

7.4. Nitric acid (concentrated 70%, reagent-grade).

7.5. Aluminum nitrate • 9 hydrate.

7.6. Sulfuric acid (concentrated 96%, reagent-grade).

7.7. Xylene (reagent-grade).

7.8. Nitric acid (4 M). Dilute 250 mL of concentrated nitric acid to 1 L with distilled water.

7.9. Aliquat-336 (NO_3^-), (30%). Dissolve 360 mL of Aliquat-336 (tricaprylamine hydrochloride) (Henkel Corporation, Kankahee, Illinois) in 840 mL of xylene in a 2-L separatory funnel. Shake well for 4 min with each of two successive 200-mL portions of 4 M nitric acid. Wash the organic solution three successive times with 400 mL of water, shaking for 4 min each time.

7.10. Aluminum nitrate (2.2 M). Weigh 825 g of dry aluminum nitrate • 9 hydrate in a 2-L beaker. Add 6.25 mL of concentrated nitric acid and 400 mL of water, and place over low heat to dissolve. Cool and dilute to 1 L. Filter the solution through a 7.0-cm Whatman GF/C filter.

7.11. Aluminium nitrate (acid-deficient, 2.5 M).

7.11.1. Heat 938 g of solid aluminum nitrate • 9 hydrate in a 1-L beaker on a hot plate until the salt melts and the resultant solution boils. Continue to boil until the initial volume of 600 mL has been reduced to about 380 mL.

7.11.2. When aluminum salts begin to bake on the bottom of the beaker, remove the beaker from the hot plate and rinse the walls with several 10-mL portions of water, stirring each into the solution gently to moderate the vigorous evolution of water vapor that occurs.

7.11.3. As soon as the vigor of the reaction will permit, add an additional 200 mL of water and boil the solution for a few minutes to redissolve the small quantity of aluminum salts that have dried on the bottom and sides of the beaker. When the solution is clear, dilute to approximately 950 mL. Cool to room temperature and dilute to 1 L.

7.12. Ammonium nitrate (10.8 M). Add 865 g of ammonium nitrate to a 2-L beaker. Add water and heat to dissolve. Cool and dilute to 1 L. Filter through a 7.0-cm Whatman GF/C filter.

7.13. Oxalic acid dihydrate.

7.14. Oxalic • perchloric acid. Dissolve 56 g of oxalic acid dihydrate in 800 mL of water. Add 100 mL of concentrated perchloric acid and dilute to 1 L.

7.15. Perchloric acid (concentrated 70%, reagent-grade).

7.16. Hydrochloric acid (10 M). Dilute 1667 mL of concentrated hydrochloric acid to 2 L with water.

7.17. Nitric acid (7.8 M). Dilute 1 L of concentrated nitric acid to 2 L with water.

7.18. Sodium sulfate • sulfuric acid solution. Dissolve 25 g of anhydrous sodium sulfate in 250 mL of water. Slowly add 250 mL of concentrated sulfuric acid.

7.19. Hydrochloric acid (0.36 M) • hydrofluoric acid (.01 M). Dissolve 29 mL of concentrated hydrochloric acid and 0.36 mL of concentrated hydrofluoric acid in water. Dilute to 1 L.

7.20. Hydrogen peroxide (30% solution).

7.21. Anion exchange resin. Bio Rad AGI-X2, 50 to 100 mesh.

7.22. Titanium trichloride (20%). Aldrich Chemical Company, 1001 West St. Paul Ave., Milwaukee, WI 53233.

7.23. Ascorbic acid (5% solution). Dissolve 5 g of ascorbic acid in 100 mL of water.

7.24. Cerium trichloride septahydrate.

7.25. Cerium chloride (0.5 mg/mL). Dissolve 0.665 g of cerium trichloride septahydrate in 250 mL of water. Add 8.5 mL of concentrated hydrochloric acid and dilute to 500 mL with water.

7.26. Potassium fluoride (anhydrous).

7.27. Carbon suspension. Fume one 47-mm GA-6 metricel filter in 5 mL of concentrated sulfuric acid. Cool and dilute to 50 mL with water.

7.28. Substrate suspension. Dilute 10 mg of cerium and 20 mL of concentrated hydrochloric acid to 250 mL with water. Dilute 8 mL of concentrated hydrofluoric acid to 250 mL with water. Combine the solutions and add 2 to 3 mL of carbon suspension. Vigorously shake the substrate before using.

7.29. Ethanol • water solution (8:2). Mix 200 mL of 95% ethanol with 50 mL of water.

7.30. Sodium nitrite (25% solution). Dissolve 25 g of sodium nitrite in 100 mL of water.

7.31. Nitric acid (12 M) • hydrofluoric acid (1 M). Mix 1536 mL of concentrated nitric acid, 67 mL of concentrated hydrofluoric acid and 401 mL of water. Store in a 2-L polyethylene bottle.

7.32. H_3BO_3 for cleaning. Use to prepare cleaning solution used in Step 9.7.10.

8. Calibration and Standards

8.1. Plutonium-242 tracer.

8.1.1. Obtain the ^{242}Pu stock solution from Oak Ridge National Laboratory.

8.1.2. Prepare the tracer solution in 4 M HNO_3.

8.1.3. Prepare two concentrations of tracer. One tracer is approximately 300 pCi/mL, and the other is approximately 3 nCi/mL. Standardize both solutions against the National Bureau of Standards (NBS) Standard Reference Material (SRM) 4338, ^{240}Pu primary standard.

8.2. Americium-243 tracer.

8.2.1. Obtain the ^{243}Am stock solution from Oak Ridge National Laboratory.

8.2.2. Prepare the tracer solution in 4 M HNO_3.

8.2.3. Standardize the ^{243}Am tracer against a primary ^{241}Am standard from Amersham (AMZ.44).

8.3. Uranium-232 tracer.

8.3.1. Obtain the ^{232}U stock solution from Los Alamos National Laboratory.

8.3.2. Prepare the tracer solution in 4 M HNO_3.

8.3.3. Concentration of the tracer is approximately 300 pCi/mL (660 dpm) and is standardized against NBS SRM 995, a ^{233}U standard.

8.4. Calibration of the alpha spectrometer.

8.4.1. Standardize the alpha secondary standard containing ^{243}Am in a gas-flow proportional counter using NBS SRM 4906-B15, ^{238}Pu, as the primary standard to determine counter efficiency.

8.4.2. Accumulate calibration counts for 600 s. Determine the efficiency of each alpha spectrometer by integrating the counts in 90 channels (60 channels to the left of the peak and 30 channels to the right of the peak of the energy spectrum of the ^{243}Am isotope).

8.4.3. Accumulate background counts for each energy spectrum for each detector for 1800 s.

9. Procedure

9.1. Sample dissolution.

9.1.1. Liquid waste influent.

9.1.1.1. Determine the gross alpha activity of the liquid waste. If the activity of the liquid waste is 10^4 to 10^5 dpm/L, use a 10-mL aliquot. Decrease the sample size by a factor of 10 for each factor of 10 increase in alpha activity over 10 dpm/L.

9.1.1.2. Place the sample in a 25-mL platinum crucible. Add 1 mL of ^{242}Pu tracer (3000 pCi/mL), 1 mL of ^{243}Am tracer (3000 pCi/mL), and 1 mL of ^{232}U tracer (300 pCi/mL).

9.1.1.3. Add 1 mL of concentrated HF and evaporate to dryness on a hot plate.

9.1.1.4. Add approximately 1 g of anhydrous KF, 1 drop of concentrated HF, and 1 drop of concentrated HNO_3 to each crucible. Fuse over a high-temperature blast burner.

9.1.1.5. Cool slightly and add approximately 10 mL of concentrated HNO_3. Heat to dryness on a hot plate.

9.1.1.6. Dissolve the fusion cake in 10 mL of 7.8 M HNO_3 by heating on a hot plate.

9.1.1.7. Transfer the solution to a clean 250-mL beaker and heat to dryness under an infrared lamp.

9.1.2. Liquid waste effluent.

9.1.2.1. Place 500 mL of sample in a 1-L Erlenmeyer flask. Add 1 mL of ^{242}Pu (300 pCi/mL), 1 mL of ^{243}Am tracer (300 pCi/mL), and 1 mL of ^{232}U tracer (300 pCi/mL).

9.1.2.2. Add 5 mL of concentrated HNO_3 and evaporate to dryness on a hot plate. Do not bake the sample.

9.1.2.3. Add 3 mL of concentrated HNO_3 and 30 mL of 30% H_2O_2. Evaporate to dryness on the hot plate. Do not bake the sample.

9.1.2.4. Add 50 mL of 4 M HNO_3 and boil to dissolve.

9.1.2.5. Add approximately 2 mL of ash-free cellulose filter pulp to the hot sample and filter through 47-mm Gelman GA-6 paper, using a vacuum. Save the filtrate in a clean 250-mL beaker.

9.1.2.6. Ash the filter paper and contents in a 25-mL platinum crucible with a high-temperature blast burner.

9.1.2.7. Add approximately 2 mL of concentrated HF to the crucible and heat to dryness under an IR lamp.

9.1.2.8. Add one drop each of concentrated HNO_3 and concentrated HF to the residue in the platinum crucible. Add approximately 1.0 g of anhydrous KF.

9.1.2.9. Fuse the residue with the KF over a high-temperature blast burner and cool slightly.

9.1.2.10. Add approximately 5 mL of concentrated HNO_3 and heat to dryness under an infrared lamp. Dissolve the melt in approximately 10 mL of 7.8 M HNO_3, and combine the solution with the filtrate from Step 9.1.2.5 above.

9.1.2.11. Boil the combined sample to dryness under an IR lamp.

9.1.3. Filter cake.

9.1.3.1. Place 0.5 g of dried filter cake into a 150-mL beaker. The drying and weighing of the sample must be done in a glove box.

9.1.3.2. Add 20 mL of 12 M HNO_3 • 1 M HF to the sample. Cover with a watch glass and digest for 20 min on a hot plate.

9.1.3.3. Remove the sample from the hot plate and carefully decant the supernate into a 100-mL beaker that contains 3.5 g of $Al(NO_3)_3 \bullet 9\ H_2O$.

9.1.3.4. Add 20 mL of 12 M HNO_3 • 1 M HF to the remaining residue in the 150-mL beaker. Cover with a watch glass and digest for 20 min on a hot plate.

9.1.3.5. Remove the sample from the hot plate and carefully decant the supernate into the 100-mL beaker.

9.1.3.6. Add 10 mL of 7.8 M HNO_3 to the remaining residue in the 150-mL beaker. Cover with a watch glass and digest for 10 min on a hot plate.

9.1.3.7. Remove the sample from the hot plate and carefully decant the supernate into the 100-mL beaker.

9.1.3.8. The combined solution from the three digestions is transferred to a 100-mL volumetric flask and diluted to volume with 7.8 M HNO_3.

9.1.3.9. Determine the gross alpha activity of the filter cake from this solution. If the activity of the digested filter cake is 10^5 dpm/g, use a 0.01-g sample. Increase or decrease the sample size by a factor of 10 for each factor of 10 decrease or increase in sample activity.

9.1.3.10. Place the sample in a 250-mL beaker. Add 1 mL of ^{242}Pu tracer (3000 pCi/mL), 1 mL of ^{243}Am tracer (3000 pCi/mL), and 1 mL of ^{232}U tracer (300 pCi/mL). Heat to dryness under an infrared lamp.

9.2. Separation of plutonium, uranium, and americium.

9.2.1. Add 5 mL of concentrated HNO_3 and 50 mL of 2.2 M $Al(NO_3)_3$ to the residues from the sample dissolutions from Steps 9.1.1.7, 9.1.2.11, and 9.1.3.10. Cover with a watch glass and heat to dissolve. **DO NOT BOIL.**

9.2.2. Cool and add 1 mL of 25% $NaNO_2$. Allow to react for 3 min.

9.2.3. Add sample to a 250-mL separatory funnel that contains 50 mL of 30% Aliquat-336 and 5 mL of 25% $NaNO_2$.

9.2.4. Wash sample container with 25 mL of 2.2 M $Al(NO_3)_3$ and add to the separatory funnel. Allow the sample to react for 3 min.

9.2.5. Shake the sample on a shaker for 3 min. Allow the layers to separate and drain the lower layer into a second 250-mL separatory funnel that contains 50 mL of 30% Aliquat-336. Save this portion for americium analysis.

9.2.6. Add 10 mL of 7.8 M HNO_3 to the 30% Aliquat-336 (NO_3^-) remaining in the first separatory funnel and shake for 3 min. Allow the layers to separate, and drain off the lower phase and discard. Repeat this step.

9.2.7. Add 50 mL of 10 M HCl to the separatory funnel. Shake for 3 min and allow layers to separate. Drain off the lower phase and discard. Repeat this step.

9.2.8. Add 50 mL of oxalic • perchloric acid solution to the separatory funnel. Shake for 3 min, allow the layers to separate, and drain the lower phase into a 250-mL beaker. Save this portion.

9.2.9. Add 25 mL of water to the separatory funnel and shake for 3 min. Allow the layers to separate and drain the lower phase into the 250-mL beaker from Step 9.2.8.

9.2.10. Add 2 mL of Na_2SO_4 • H_2SO_4 acid solution to the 250-mL beaker. Evaporate to dryness on a hot plate.

9.3. Separation of plutonium from uranium.

9.3.1. Add 10 mL of concentrated HNO_3 and 1 mL of 30% H_2O_2 to the 250-mL beaker from Step 9.2.10. Evaporate to dryness on a steam bath.

9.3.2. Prepare an ion exchange column (10-mm by 80-mm) using AG1-X2 chloride-form anion exchange resin. Wash the column with 20 mL of 7.8 M HNO_3 and discard the washings.

9.3.3. Dissolve the sample from Step 9.3.1 in 10 mL of 7.8 M HNO_3 and add to column. Save the washing for U analysis.

9.3.4. Wash the column with an additional 110 mL of 7.8 M HNO_3. Keep the combined washings for U analysis.

9.4. Determination of plutonium.

9.4.1. Elute Pu from the column with 25 mL of 0.36 M HCl • 0.01 M HF into a 100-mL beaker.

9.4.2. Add 2 mL of Na_2SO_4 • H_2SO_4 solution and evaporate to dryness on a hot plate.

9.4.3. Coprecipitate the Pu with CeF_3 (see Section 9.7). Determine the Pu concentration by alpha spectrometry.

9.5. Determination of uranium.

9.5.1. Evaporate the washings from Step 9.3.4 to dryness on a hot plate.

9.5.2. Add 10 mL of concentrated HNO_3 and 1 mL of 30% H_2O_2 to the sample. Evaporate to dryness in a steam bath.

9.5.3. Dissolve sample in 10 mL of 7.8 M HNO_3.

9.5.4. Wash the same column used for Pu determination with 20 mL of 7.8 M HNO_3. Discard the washings.

9.5.5. Add sample from Step 9.5.3 to the column. Collect the washings in a 250-mL beaker.

9.5.6. Wash the column with an additional 85 mL of 7.8 M HNO_3. Save the combined washings for U analysis. Discard the resin in the ion exchange column.

9.5.7. Heat the washings to near dryness on a hot plate. Transfer the sample to a 100-mL beaker with 7.8 M HNO_3. Evaporate to dryness on a hot plate.

9.5.8. Coprecipitate the U with CeF_3 (see Section 9.7). Determine the U concentration by alpha spectrometry.

9.6. Determination of americium.

9.6.1. Add 50 mL of 2.5 M acid-defficient $Al(NO_3)_3$ to the separatory funnel containing the Am fraction from Step 9.2.5. Shake for 3 min. Allow the layers to separate. Discard the lower phase.

9.6.2. Add 15 mL of 10.8 M NH_4NO_3. Shake for 3 min. Allow the phases to separate. Discard the lower phase. Repeat twice.

9.6.3. Add 15 mL of 7.8 M HNO_3. Shake for 3 min, allow the phases to separate, and drain the lower phase into a 250-mL Erlenmeyer flask. Repeat this step. Save the combined portions.

9.6.4. Add 2 mL of $Na_2SO_4 \bullet H_2SO_4$ solution, 10 mL of concentrated HCl, 20 drops of concentrated $HClO_4$ and heat until fumes of H_2SO_4 appear.

9.6.5. Transfer the sample to a 100-mL beaker with 7.8 M HNO_3. Heat to dryness on a hot plate.

9.6.6. Coprecipitate the Am with CeF_3 (see Section 9.7). Determine Am by alpha spectrometry.

9.7. Coprecipitation of Pu, Am, and U with CeF_3.

9.7.1. Dissolve the sample from Steps 9.4.2, 9.5.7, and 9.6.5 in 10 mL of 3 M HCl and keep at the boiling temperature for 5 min with a minimum loss of solution.

9.7.2. Transfer the sample to a 40-mL, round-bottom, plastic centrifuge tube with water. The total volume should be no more than 12 mL.

9.7.3. Add 2 drops of 5% ascorbic acid solution and one drop of 20% $TiCl_3$ if U is to be determined. Omit the $TiCl_3$ solution if U is not to be determined.

9.7.4. Add 0.1 mL Ce carrier (50-mg Ce) and 2 mL of 48% HF.

9.7.5. Let stand for a minimum of 30 min.

9.7.6. Mount a 25-mm HT-200 filter on the support in a polysulfone twist-lock funnel attached to a vacuum system. Apply the vacuum and add 2 to 4 mL of ethanol • water solution.

9.7.7. As the filter goes dry, add, in order, to the center of the filter the following: 5 mL of substrate suspension, the sample after vigorous swirling, a 2- to 4-mL water rinse, and a 2- to 4-mL ethanol • water solution rinse of the centrifuge tube.

9.7.8. Between samples, rinse the funnel chimney first in hot 6 M HCl and then in water.

9.7.9. Dry the filters for 5 min under a heat lamp at a distance of 12 to 16 in. Place filters in labeled Petri dishes, and submit for alpha spectrometry.

9.7.10. Clean the centrifuge tubes by soaking them in hot 6 M HCl containing a little H_3BO_3.

10. Operation of the Alpha Spectrometer

10.1. Refer to the operating manual for the alpha spectrometer.

11. Calculations

11.1. Count influent samples for 10 min. Count effluent samples for 30 min.

11.2. Plutonium.

11.2.1. Determine the counts for each of the three isotopes by integrating the counts in the channels for each energy spectrum.

11.2.1.1. Determine the chemical recovery using the following equation:

$$YPu = \frac{CPu_2 - BPu_2}{T \times D \times APu_2} ,$$

where YPu = recovery factor for ^{242}Pu tracer,
CPu_2 = ^{242}Pu gross counts,
BPu_2 = ^{242}Pu background counts,
T = count length (min),
D = detector counting efficiency, and
APu_2 = activity of ^{242}Pu tracer (dpm).

11.2.1.2. Determine the amount of ^{239}Pu and/or ^{238}Pu using the following equations:

$$^{239}Pu = \frac{CPu_9 - BPu_9}{T \times D \times YPu \times V \times 2.22} ,$$

where ^{239}Pu = ^{239}Pu activity (pCi/L or pCi/g),
CPu_9 = ^{239}Pu gross counts,
BPu_9 = ^{239}Pu background counts,
T = count length (min),
D = detector counting efficiency,
YPu = recovery factor for ^{239}Pu tracer,
V = sample volume (L) or weight (g), and
2.22 = factor to convert dpm to pCi.

$$^{238}Pu = \frac{CPu_8 - BPu_8}{T \times D \times YPu \times V \times 2.22} ,$$

where ^{238}Pu = ^{238}Pu activity (pCi/L or pCi/g),
CPu_8 = ^{238}Pu gross counts,
BPu_8 = ^{238}Pu background counts,
T = count length (min),
D = detector counting efficiency,
YPu = recovery factor for ^{238}Pu tracer,
V = sample volume (L) or weight (g), and
2.22 = factor to convert dpm to pCi.

11.3. Americium.

11.3.1. Determine the counts for each of the isotopes by integrating the counts in the channels for each energy spectrum.

11.3.2. Determine the chemical recovery using the following equation:

$$YAm = \frac{CAm_3 - BAm_3}{T \times D \times AAm_3} ,$$

where YAm = recovery factor for ^{243}Am tracer,
CAm_3 = ^{243}Am gross counts,
BAm_3 = ^{243}Am background counts,
T = count length (min),
D = detector counting efficiency, and
AAm_3 = activity of ^{243}Am tracer (dpm).

11.3.3. Determine the concentration of ^{241}Am using the following equation:

$$^{241}Am = \frac{CAm_1 - BAm_1}{T \times D \times YAm \times V \times 2.22} ,$$

where ^{241}Am = ^{241}Am activity (pCi/L or pCi/g),
CAm_1 = ^{241}Am gross counts,
BAm_1 = ^{241}Am background counts,
T = count length (min),
D = detector counting efficiency,
YAm = recovery factor for ^{243}Am tracer,
V = sample volume (L) or weight (g), and
2.22 = factor to convert dpm to pCi.

11.4. Uranium

11.4.1. Determine the counts for each isotope by integrating the counts in the channels for each energy spectrum.

11.4.2. Determine the chemical recovery using the following equation:

$$YU = \frac{CU_2 - BU_2}{T \times D \times AU_2} ,$$

where YU = recovery factor for ^{232}U tracer,
CU_2 = ^{232}U gross counts,
BU_2 = ^{232}U background counts,
T = count length (min),
D = detector counting efficiency, and
AU_2 = activity of ^{232}U tracer (dpm).

11.4.3. Determine the concentration of ^{234}U and/or ^{235}U.

$$^{234}U = \frac{CU_4 - BU_4}{T \times D \times YU \times V \times 2.22},$$

where ^{234}U = ^{234}U activity (pCi/L or pCi/g),
CU_4 = ^{234}U gross counts,
BU_4 = ^{234}U background counts,
T = count length (min),
D = detector counting efficiency,
YU = recovery factor for ^{234}U tracer,
V = sample volume (L) or weight (g), and
2.22 = factor to convert dpm to pCi.

$$^{235}U = \frac{CU_5 - BU_5}{T \times D \times YU \times V \times 2.22},$$

where ^{235}U = ^{235}U activity (pCi/L or pCi/g),
CU_5 = ^{235}U gross counts,
BU_5 = ^{235}U background counts,
T = count length (min),
D = detector counting efficiency,
YU = recovery factor for ^{235}U tracer,
V = sample volume (L) or weight (g), and
2.22 = factor to convert dpm to pCi.

11.5. Uncertainty.

11.5.1. The following table lists the factors and their relative uncertainties in the calculation of Pu, Am, and U activities.

Definition	Factor Symbol	Value	%Uncertainty
^{242}Pu gross counts	CPu2	Variable	Variable
^{239}Pu gross counts	CPu9	Variable	Variable
^{238}Pu gross counts	CPu8	Variable	Variable
^{243}Am gross counts	CAm3	Variable	Variable
^{241}Am gross counts	CAm1	Variable	Variable
^{232}U gross counts	CU2	Variable	Variable
^{234}U gross counts	CU4	Variable	Variable
^{235}U gross counts	CU5	Variable	Variable
^{239}Pu (dpm/Vol)	^{239}Pu	Variable	Variable
^{238}Pu (dpm/Vol)	^{238}Pu	Variable	Variable
^{241}Am (dpm/Vol)	^{241}Am	Variable	Variable
^{234}U (dpm/Vol)	^{234}U	Variable	Variable
^{235}U (dpm/Vol)	^{235}U	Variable	Variable
Blank count	B	0.1 to 3 cpm	20-30
Counting time	T	10 to 30 min	0.1
Counting efficiency	D	0.25	2
dpm/pCi	MC	2.22	0
Volume, L or g	V	Variable	1
% yield	Y	Variable	5
1.96		Constant	
0.003		Constant	

11.5.2. The standard deviation of the activity in the sample at the 95% confidence level is given by

$$SDPu9 = 1.96 \times {}^{239}Pu \times \sqrt{\frac{CPu9 + B}{(CPu9 - B)^2} + 0.003} \quad ,$$

$$SDPu8 = 1.96 \times {}^{238}Pu \times \sqrt{\frac{CPu8 + B}{(CPu8 - B)^2} + 0.003} \quad ,$$

$$SDAm1 = 1.96 \times {}^{241}Am \times \sqrt{\frac{CAm1 + B}{(CAm1 - B)^2} + 0.003} \quad ,$$

$$SDU4 = 1.96 \times {}^{234}U \times \sqrt{\frac{CU4 + B}{(CU4 - B)^2} + 0.003}$$, and

$$SDU5 = 1.96 \times {}^{235}U \times \sqrt{\frac{CU5 + B}{(CU5 - B)^2} + 0.003}$$.

12. Source Materials

12.1. *Analytical Chemistry Branch Procedures Manual*, L. Z. Bodnar and D. R. Percival, Eds. (Radiological and Environmental Sciences Laboratory, US Department of Energy, Idaho Falls, Idaho, 1982).

PLUTONIUM, AMERICIUM, AND URANIUM IN WASTE WATER AND FILTER CAKE — NEODYMIUM FLUORIDE COPRECIPITATION

Analyte: Plutonium, americium, and uranium	**Method No.:** WR180
Matrix: Waste water and filter cake **Procedure:** Neodymium fluoride coprecipitation	**Minimum Detectable Activity:** Pu 1 pCi/sample Am 1 pCi/sample U 1 pCi/sample **Accuracy and Precision:** (mean ± 1 sigma) ^{239}Pu 95% ± 11% ^{238}Pu 98% ± 9% ^{241}Am 91% ± 6% ^{234}U 93% ± 13% ^{235}U 90% ± 40% **Acceptable Minimum Detectable Activity:** 50 pCi/L for waste water
Effective Date: 10/17/88	**Author:** Terry D. Filer

SAFETY NOTE: Before beginning this procedure, read all of the Material Safety Data Sheets for the chemicals listed in Sec. 7. Read Sec. 4.3 of the EM-9 Safety Manual for information on personal protective clothing and equipment.

1. Principle of Method

1.1. Plutonium, americium, and uranium are dissolved in 2% nitric acid after digestion with nitric acid • hydrofluoric acid.

1.2. The actinides are coprecipitated with cerium hydroxide.

1.3. Thorium is separated from the other actinides by coprecipitation on ceric iodate.

1.4. Uranium, plutonium, and americium are separated sequentially by oxidizing them to their highest oxidation states followed by a series of coprecipitations of the nuclides.

1.5. The isolated nuclides are coprecipitated on neodymium fluoride, filtered, and counted by alpha spectrometry.

2. Sensitivity

2.1. Sensitivity is limited by the counter background.

2.2. For routine measurements with a 60-min counting period and a counting efficiency of 15%, the minimum detection limit is 1 pCi per sample.

3. Accuracy and Precision

3.1. Routine performance data are obtained by dividing the result on each QC analysis by the certified value for each material and calculating a mean ratio ± 1 standard deviation.

Nuclide	Mean ± SD
^{239}Pu	0.95 ± 0.11
^{238}Pu	0.98 ± 0.09
^{241}Am	0.91 ± 0.06
^{234}U	0.93 ± 0.13
^{235}U	0.90 ± 0.40

3.2. The ^{235}U analysis had a large standard deviation because the ^{235}U present in the QC samples was near the detection limit.

4. Interferences

4.1. Neptunium-237 is a spectral interference to ^{234}U and ^{242}Pu tracer.

5. Collection and Storage of Samples

5.1. Liquid waste samples are made approximately 1% acidic with HNO_3 before analysis.

5.2. No treatment is given to filter cake samples before analysis.

5.3. Analysis must be completed within six months.

6. Apparatus

6.1. Alpha spectrometer: equipped with a 1024-channel analyzer using 450-mm^2 silicon-surface barrier detectors. Alpha spectrometer, ORTEC 576, EG&G Ortec, Oak Ridge, Tennessee. Multichannel analyzer, series 40, Canberra Industries, Inc., Meriden, Connecticut.

6.2. Hot plate: adjustable from 10°F above ambient to 700°F.

6.3. Heat lamp: 250-watt, infrared.

6.4. Perchloric acid fume hood.

6.5. Ash-free analytical filter pulp. Schleicher and Schuell, Keene, NH 03431.

6.6. Blast lamp: Fisher.

6.7. Filter paper: 47-mm, Metricel GA-6. Gelman Sciences Co., Ann Arbor, Michigan.

6.8. K.S.E. glove box: equipped with a Blue M infra oven and Ainsworth electronic balance (0.00- to 200.00-g capacity).

6.9. Centrifuge tubes: 50-mL, round-bottom, polycarbonate.

6.10. Filters: 25-mm, Gelman HT-200 Tuffryn.

6.11. Twist-lock funnel: polysulfone. Gelman Instrument Co., Ann Arbor, Michigan.

6.12. Centrifuge tubes: 50-mL, round-bottom, glass.

6.13. Steam bath.

6.14. Centrifuge: equipped with timer and variable speed (0 to 6000 rpm), Damen/IEC Division.

6.15. Beakers: 250-, 400-, and 1000-mL, Teflon.

6.16. Bottles: 1- and 2-L, polypropylene.

7. Reagents

7.1. Hydrochloric acid (concentrated, 36%, reagent-grade).

7.2. Hydrofluoric acid (concentrated, 48%, reagent-grade).

7.3. Nitric acid (concentrated, 70%, reagent-grade).

7.4. Sulfuric acid (concentrated, 96%, reagent-grade).

7.5. Ammonium hydroxide (concentrated, 30%, reagent-grade).

7.6. Hydrogen peroxide solution (30%).

7.7. Titanium trichloride (10%). Aldrich Chemical Company, Inc., Milwaukee, Wisconsin.

7.8. Bromthymol blue (0.1% in water). Dissolve 1.0 g of sodium hydroxide in 80 mL of distilled water in a 100-mL volumetric flask. Add 0.1 g of bromthymol blue and stir until dissolved. Dilute to volume.

7.9. Safranine-o (0.1% in water). Dissolve 0.1 g of safranine-o in 100 mL of distilled water.

7.10. Nitric acid (12 M) • hydrofluoric acid (1 M). Mix 1536 mL of concentrated nitric acid, 67 mL of concentrated hydrofluoric acid, and 401 mL of water. Store in a 2-L polypropylene bottle.

7.11. Neodymium chloride (10 mg of Nd/mL). Heat 25 mL of concentrated hydrochloric acid and 1.17 g of neodymium oxide on a hot plate until the neodymium oxide is in solution. Cool the solution, dilute to 100 mL, and store in a polypropylene bottle.

7.12. Neodymium chloride (0.5 mg of Nd/mL). Dilute 5 mL of neodymium chloride (10 mg of Nd/mL) to 100 mL with distilled water.

7.13. Neodymium perchlorate (0.5 mg of Nd/mL). Heat 5 mL of neodymium chloride (10 mg of Nd/mL) in 5 mL of concentrated perchloric acid until the perchloric acid fumes. Cool the solution, dilute to 100 mL with water, and treat with 10 to 20 mg of solid potassium dichromate. Store in a polypropylene bottle.

7.14. Carbon suspension. Fume a 47-mm Metricel GA-6 filter for approximately 5 min in 5 mL of concentrated sulfuric acid. Cool the suspension and dilute to 50 mL with water.

7.15. Potassium and sodium sulfate solution. Dissolve 75 g of potassium sulfate and 75 g of sodium sulfate in 800 mL of water and dilute to 1 L.

7.16. Ammonium iodate. Add 20 g of ammonium iodate and 20 mL of concentrated nitric acid to 800 mL of water. Heat the mixture to boiling, cool, and filter through a 47-mm Metricel GA-6 filter. Dilute the filtrate to 1 L with water.

7.17. Ammonium fluoride. Dissolve 80 g of ammonium fluoride in 800 mL of water, and dilute to 1 L. Treat the aliquot needed each day for use in the precipitation of the rare earths from americium with enough ammonium persulfate to give a solution concentration of approximately 5% in ammonium persulfate. Store in a polypropylene bottle.

7.18. Cerium nitrate (10 mg of Ce/mL). Dissolve 3.1 g of cerous nitrate hexahydrate in 100 mL of 1% nitric acid (Allied Chemical Co., thorium-free).

7.19. Manganous sulfate hexahydrate (1%). Dissolve 1 g of manganous sulfate hexahydrate in 50 mL of distilled water in a 100-mL volumetric flask. Dilute to volume.

7.20. Ammonium persulfate.

7.21. Perchloric acid (1%) • potassium dichromate (0.01%). Dissolve 0.1 g of potassium dichromate in 500 mL of distilled water in a 1-L volumetric flask. Add 10 mL of concentrated perchloric acid. Dilute to volume.

7.22. Manganous sulfate hexahydrate (50%). Dissolve 50 g of manganous sulfate hexahydrate in enough distilled water to give 100 mL of solution.

7.23. Potassium dichromate (1%). Dissolve 1.0 g of potassium dichromate in 80 mL of distilled water in a 100-mL volumetric flask. Dilute to volume.

7.24. Hydrofluoric acid (20%) • perchloric acid (10%). Add 200 mL of hydrofluoric acid and 100 mL of perchloric acid to 500 mL of distilled water in a 1-L polypropylene bottle. Dilute to 1 L with water and store in the polypropylene bottle.

8. Calibration and Standards

8.1. Plutonium-242 tracer.

8.1.1. Obtain the ^{242}Pu stock solution from Oak Ridge National Laboratory.

8.1.2. Prepare the tracer solution in 4 M HNO_3.

8.1.3. Two concentrations of tracer are used. One is in the 200-pCi/mL range. The other is in the 2-nCi/mL range. Both were standardized against the National Bureau of Standards (NBS) Standard Reference Material (SRM) 4338, ^{240}Pu primary standard.

8.2. Americium-243 tracer.

8.2.1. Obtain the ^{243}Am stock solution from Oak Ridge National Laboratory.

8.2.2. Prepare the tracer solution in 4 M HNO_3.

8.2.3. Standardize the ^{243}Am tracer against a primary ^{241}Am standard Amersham (AMZ.44).

8.3. Uranium-232 tracer.

8.3.1. The ^{232}U stock solution was obtained from Los Alamos National Laboratory.

8.3.2. Prepare the tracer solution in 4 M HNO_3.

8.3.3. Concentration of the tracer is in the 50-pCi/mL range and is standardized against NBS SRM 995, a ^{233}U standard.

8.4. Calibration of the alpha spectrometer.

8.4.1. The alpha secondary standard contains ^{242}Pu and is standardized against NBS SRM 4338, ^{240}Pu.

8.4.2. Calibration counts are made for 600 s. Determine the efficiency of each detector by integrating the counts in 90 channels (60 channels to the left of the peak and 30 channels to the right of the peak) of the energy spectrum of the ^{242}Pu isotope.

8.4.3. Accumulate background counts for each energy spectrum for each detector for 3600 s.

9. Procedure

9.1 Sample dissolution.

9.1.1. Liquid waste.

9.1.1.1. Determine the gross alpha activity of the liquid waste. If the activity of the liquid waste is less than 1 nCi/L, use a 200-mL sample. For all other liquid waste samples, adjust the volume so that the total activity does not exceed 500 pCi per sample.

9.1.1.2. Place the sample into the appropriate size of Teflon beaker. Add 1 mL of ^{242}Pu tracer (20 pCi/mL), 1 mL of ^{243}Am tracer (20 pCi/mL), and 1 mL of ^{232}U tracer (50 pCi/mL).

9.1.1.3. Add 20 mL of concentrated HNO_3 and 10 mL of concentrated hydrofluoric acid, and evaporate to dryness.

9.1.1.4. Transfer the solution to a clean 1000-mL beaker using 20 mL of 1:1 HNO_3. Add 50 mL of 30% H_2O_2 and evaporate to dryness.

9.1.1.5. Add 10 mL of concentrated HNO_3 and dilute to 500 mL with distilled water.

9.1.2. Filter cake.

9.1.2.1. Place 0.50 g of dried filter cake into a 250-mL Teflon beaker.

NOTE: The drying and weighing must be performed in a glove box.

9.1.2.2. Add 20 mL of 12 M HNO_3 • 1 M HF to the sample. Cover with a watch glass and digest for 20 min on a hot plate.

9.1.2.3. Remove the sample from the hot plate and carefully decant the supernate into a 100-mL polypropylene volumetric flask.

9.1.2.4. Add 20 mL of 12 M HNO_3 • 1 M HF to the remaining residue in the 250-mL Teflon beaker. Cover with a watch glass and digest for 20 min on a hot plate.

9.1.2.5. Remove the sample from the hot plate and carefully decant the supernate into the 100-mL volumetric flask.

9.1.2.6. Add 10 mL of 1:1 HNO_3 to the remaining residue in the 250-mL Teflon beaker. Cover with a watch glass and digest for 10 min on a hot plate.

9.1.2.7. Remove the sample from the hot plate, and carefully decant the supernate into the 100-mL volumetric flask.

9.1.2.8. Dilute the solution in the 100-mL polypropylene volumetric flask to volume with 1:1 HNO_3.

9.1.2.9. Determine the gross alpha activity of the filter cake using this solution. If the activity of the digested filter cake is 10^5 dpm/g, use a 0.01-g sample. Increase or decrease the sample size by a factor of 10 for each factor of 10 decrease or increase in sample activity.

9.1.2.10. Place the sample in a clean 250-mL Teflon beaker. Add 1 mL of ^{242}Pu tracer (2 nCi/mL), 1 mL of ^{243}Am tracer (2 nCi/mL), and 1 mL of ^{232}U tracer (50 pCi/mL). Add 10 mL of concentrated HNO_3 and 5 mL of concentrated HF. Evaporate to dryness.

9.1.2.11. Transfer the sample to a 1000-mL beaker with 20 mL of 1:1 HNO_3. Dilute to 500 mL with distilled water.

9.2. Coprecipitation of actinides on cerium hydroxide.

9.2.1. Add 10 drops of 0.1% bromthymol blue, 1 mL of 30% H_2O_2, 0.5 mL of cerium nitrate (10 mg of Ce/mL), and enough concentrated NH_4OH to reach a blue endpoint to the solutions from Steps 9.1.1.5 and 9.1.2.11.

9.2.2. Add filter pulp and bring the solution to a boil. Cool the solution in a water bath.

9.2.3. Collect the precipitate on a 47-mm Metricel GA-6 filter paper and discard the supernate.

9.2.4. Place the filter in a 250-mL beaker. Add 2 mL of sodium and potassium sulfate solution, 2 mL of concentrated sulfuric acid, 2 mL of concentrated perchloric acid, and 5 mL of concentrated nitric acid. Heat to dryness on a hot plate.

9.2.5. Dissolve the residue in 20 mL of 2% HNO_3.

9.3. Coprecipitation of +4 elements on ceric iodate.

9.3.1. Transfer the sample into a 50-mL, round-bottomed glass centrifuge tube using a minimum of water to complete the transfer.

9.3.2. Add 1 drop of 1% manganous sulfate hexahydrate and approximately 0.25 g of solid ammonium persulfate. Heat the samples in a hot water bath until the yellow ceric ion color and the purple permanganate color are fully developed. Continue heating for 10 min.

9.3.3. Cool the sample in a cold water bath. Add 10 mL of ammonium iodate solution, and allow the sample to stand for 5 min.

9.3.4. Centrifuge sample for 5 min at 2000 rpm.

9.3.5. Transfer the supernate, without rinsing the centrifuge tube, back into the 250-mL beaker and save for U, Pu, and Am determinations. Discard the precipitate.

9.4. Uranium determination.

9.4.1. Add 5 mL of concentrated hydrochloric acid and 1 mL of concentrated sulfuric acid to the supernate from the ceric iodate step.

9.4.2. Evaporate to dryness on a hot plate. Add 5 drops of concentrated sulfuric acid, and heat to a clear melt over the blast burner until bubbles stop forming.

9.4.3. Cool the sample on the hot plate to minimize thermal shock to the beaker; then cool to room temperature.

9.4.4. Add 20 mL of 2% HCl to the sample, and heat slowly on a steam bath for 5 min.

9.4.5. Transfer the sample to a 50-mL, round-bottomed glass centrifuge tube with a minimum of water to complete the transfer.

9.4.6. Add 0.5 mL of neodymium chloride (10 mg of Nd/mL) and cool in a cold water bath.

9.4.7. Add 3 mL of ammonium fluoride solution, allow to stand for 10 min, and centrifuge for 5 min at 2000 rpm.

9.4.8. Add 1 mL of neodymium chloride (0.5 mg of Nd/mL) to the solution, and swirl gently to avoid disturbing the precipitate.

9.4.9. Allow the sample to stand for 10 min. Centrifuge for 5 min at 2000 rpm.

9.4.10. Decant the supernate into a 50-mL, round-bottomed polycarbonate centrifuge tube and save for U determination.

9.4.11. Immediately, add 2 mL of concentrated perchloric acid and 2 drops of 1% potassium dichromate to the precipitate, and heat on a hot plate until the perchloric acid fumes. Cool and save for Pu and Am determinations.

9.4.12. Add 2 mL of concentrated hydrochloric acid, 1 drop of 0.1% safranine-o and 3 drops of 10% titanium trichloride to the uranium sample in the polycarbonate centrifuge tube.

9.4.13. Add 0.1 mL of neodymium chloride (0.5 mg of Nd/mL) and 5 mL of concentrated hydrofluoric acid, swirling after each addition.

9.4.14. Heat the sample in a hot water bath for 10 min and cool. Prepare the sample for alpha spectrometry as described in Step 9.7.

9.5. Plutonium determination.

9.5.1. Heat the perchloric acid solution from Step 9.4.11 to boiling on the hot plate for 15 min. Cool and add 20 mL of 1% perchloric acid • 0.01% potassium dichromate solution. Cool in a cold water bath.

9.5.2. Add 5 mL of concentrated hydrofluoric acid containing 2 drops of 1% potassium dichromate with swirling, allow to stand for 10 min, and centrifuge at 2000 rpm for 5 min.

9.5.3. Add 1 mL of neodymium perchlorate (0.5 mg Nd/mL), and swirl gently to avoid disturbing the precipitate in the bottom of the centrifuge tube. Allow to stand for 10 min and centrifuge at 2000 rpm for 5 min.

9.5.4. Gently decant the supernate into a 50-mL, round-bottomed polycarbonate centrifuge tube and save for Pu determination.

9.5.5. Immediately treat the precipitate with 1 mL of concentrated sulfuric acid and 2 mL of potassium and sodium sulfate solution. Heat the sample to a clear melt over the blast burner. Cool and save for Am determination.

9.5.6. Add 1 drop of 30% hydrogen peroxide to the plutonium sample in the polycarbonate centrifuge tube, and heat in a hot water bath for 10 min.

9.5.7. Add 0.1 mL of neodymium chloride (0.5 mg of Nd/mL) to the sample with swirling; heat for 10 min in a hot water bath and cool.

9.5.8. Prepare the sample for alpha spectrometry as described in Step 9.7.

9.6. Americium determination.

9.6.1. Add 20 mL of 2% nitric acid, 1 drop of 0.2% silver nitrate, and 1 drop of 1% manganous sulfate hexahydrate to the melt from Step 9.5.5.

9.6.2. Heat in a hot water bath until the melt becomes solution. Add approximately 0.25 g of solid ammonium persulfate with swirling, and heat in a hot water bath until the purple permanganate color develops. Heat for another 15 min.

9.6.3. Cool the sample in a cold water bath, add 3 mL of ammonium fluoride solution (see Step 7.17 for special instructions), and allow to stand for 10 min. Centrifuge at 2000 rpm for 5 min.

9.6.4. Decant the supernate carefully, without rinsing, into a 50-mL, round-bottomed polycarbonate centrifuge tube. Discard the precipitate. Repeat Steps 9.6.3 and 9.6.4 once.

9.6.5. Add 1 mL of 50% manganous sulfate hexahydrate to the supernate, and allow the sample to stand for 10 min.

9.6.6. Add 0.1 mL of neodymium perchlorate (0.5 mg Nd/mL) and 5 mL of concentrated hydrofluoric acid containing 2 drops of 1% potassium dichromate to the sample, swirling after each addition.

9.6.7. Allow the sample to stand for 10 min, and prepare for alpha spectrometry as described in Step 9.7.

9.7. Coprecipitation of Pu, Am, and U with neodymium fluoride.

9.7.1. Mount a 25-mm Tuffryn HT-200 membrane filter on a polysulfone twist-lock funnel.

9.7.2. With vacuum applied, add approximately 2 mL of 80% ethanol, 5 mL of substrate suspension (freshly treated for 15 min in the sonic bath), the sample (after vigorous swirling), a hot 5-mL aliquot of 20% hydrofluoric acid • 10% perchloric acid rinse of the centrifuge tube, a 5-mL water rinse of the filter, and a 2-mL 80% ethanol rinse of the filter.

9.7.3. Dry the filter for 5 min under a heat lamp at a distance of 12 to 16 in.

9.7.4. Submit the filter for alpha spectrometry.

10. Operation of the Alpha Spectrometer

10.1. Refer to the operating manual for the alpha spectrometer.

11. Calculations

11.1. Count waste water samples for 60 min. Count filter cake samples for 10 min.

11.2. Plutonium.

11.2.1. Determine the counts for each of the three isotopes by integrating the counts in the channels for each energy spectrum.

11.2.2. Calculations are made using the following equations.

11.2.2.1. Determine the chemical recovery.

$$YPu = \frac{CPu2 - BPu2}{T \times D \times APu2} ,$$

where YPu = recovery factor for ^{242}Pu tracer,
CPu2 = ^{242}Pu gross counts,
BPu2 = ^{242}Pu background counts,
T = count length (min),
D = detector counting efficiency, and
APu2 = activity of ^{242}Pu tracer (dpm).

11.2.2.2. Determine the activity of ^{239}Pu and/or ^{238}Pu.

$$Pu239 = \frac{CPu9 - BPu9}{T \times D \times YPu \times V \times 2.22},$$

where Pu239 = ^{239}Pu activity (pCi/L or pCi/g),
CPu9 = ^{239}Pu gross counts,
BPu9 = ^{239}Pu background counts,
T = count length (min),
D = detector counting efficiency,
YPu = recovery factor for ^{242}Pu tracer,
V = sample volume (L) or weight (g), and
2.22 = factor to convert dpm to pCi.

$$Pu238 = \frac{CPu8 - BPu8}{T \times D \times YPu \times V \times 2.22},$$

where Pu238 = ^{238}Pu activity (pCi/L or pCi/g),
CPu8 = ^{238}Pu gross counts,
BPu8 = ^{238}Pu background counts,
T = count length (min),
D = detector counting efficiency,
YPu = recovery factor for ^{242}Pu tracer,
V = sample volume (L) or weight (g), and
2.22 = factor to convert dpm to pCi.

11.3. Americium.

11.3.1. Determine the counts for each of the isotopes by integrating the counts in the channels for each energy spectrum.

11.3.2. Calculations are made using the following equations.

11.3.2.1. Determine the chemical recovery.

$$YAm = \frac{CAm3 - BAm3}{T \times D \times AAm3},$$

where YAm = recovery factor for ^{243}Am tracer,
CAm3 = ^{243}Am gross counts,
BAm3 = ^{243}Am background counts,
T = count length (min),
D = detector counting efficiency, and
AAm3 = activity of ^{243}Am tracer (dpm).

11.3.2.2. Determine the activity of ^{241}Am.

$$Am241 = \frac{CAm1 - BAm1}{T \times D \times YAm \times V \times 2.22} ,$$

where Am241 = ^{241}Am activity (pCi/L or pCi/g),
CAm1 = ^{241}Am gross counts,
BAm1 = ^{241}Am background counts,
T = count length (min),
D = detector counting efficiency,
YAm = recovery factor for ^{243}Am tracer,
V = sample volume (L) or weight (g), and
2.22 = factor to convert dpm to pCi.

11.4 Uranium.

11.4.1. Determine the counts for each isotope by integrating the counts in the channels for each energy spectrum.

11.4.2. Calculations are made using the following equations.

11.4.2.1. Determine the chemical recovery.

$$YU = \frac{CU2 - BU2}{T \times D \times AU2} ,$$

where YU = recovery factor for ^{232}U tracer,
CU2 = ^{232}U gross counts,
BU2 = ^{232}U background counts,
T = count length (min),
D = detector counting efficiency, and
AU2 = activity of ^{232}U tracer (dpm).

11.4.2.2. Determine the activity of ^{234}U and/or ^{235}U.

$$U234 = \frac{CU4 - BU4}{T \times D \times YU \times V \times 2.22} ,$$

where U234 = ^{234}U activity (pCi/L or pCi/g),
CU4 = ^{234}U gross counts,
BU4 = ^{234}U background counts
T = count length (min),

D = detector counting efficiency,
YU = recovery factor for ^{232}U tracer,
V = sample volume (L) or weight (g), and
2.22 = factor to convert dpm to pCi.

$$U235 = \frac{CU5 - BU5}{T \times D \times YU \times V \times 2.22} ,$$

where U235 = ^{235}U activity (pCi/L or pCi/g),
CU5 = ^{235}U gross counts,
BU5 = ^{235}U background counts,
T = count length (min),
D = detector counting efficiency,
YU = recovery factor for ^{232}U tracer,
V = sample volume (L) or weight (g), and
2.22 = factor to convert dpm to pCi.

11.5 Uncertainty.

11.5.1. The standard deviation of the activity in the sample at the 95% confidence level is given by

$$SDPu9 = 1.96 \times Pu239 \times \sqrt{\frac{CPu9 + B}{(CPu9 - B)^2} + 0.003} ,$$

$$SDPu8 = 1.96 \times Pu238 \times \sqrt{\frac{CPu8 + B}{(CPu8 - B)^2} + 0.003} ,$$

$$SDAm1 = 1.96 \times Am241 \times \sqrt{\frac{CAm1 + B}{(CAm1 - B)^2} + 0.003} ,$$

$$SDU4 = 1.96 \times U234 \times \sqrt{\frac{CU4 + B}{(CU4 - B)^2} + 0.003} , \text{ and}$$

$$SDU5 = 1.96 \times U235 \times \sqrt{\frac{CU5 + B}{(CU5 - B)^2} + 0.003} \quad ,$$

where SDPu9 = standard deviation of ^{239}Pu activity,
Pu239 = ^{239}Pu activity (dpm/Vol),
CPu9 = ^{239}Pu gross counts,
SDPu8 = standard deviation of ^{238}Pu activity,
Pu238 = ^{238}Pu activity (dpm/Vol),
CPu8 = ^{238}Pu gross counts,
SDAm1 = standard deviation of ^{241}Am activity,
Am241 = ^{241}Am activity (dpm/Vol),
CAm1 = ^{241}Am gross counts,
SDU4 = standard deviation of ^{234}U activity,
U234 = ^{234}U activity (dpm/Vol),
CU4 = ^{234}U gross counts,
SDU5 = standard deviation of ^{235}U activity,
U235 = ^{235}U activity (dpm/Vol),
CU5 = ^{235}U gross counts,
B = blank count for each respective nuclide,
1.96 = constant, and
0.003 = constant.

12. Source Material

12.1. F. D. Hindman, *Anal. Chem.* **58**, 1238-1241 (1986).

STRONTIUM-89 AND STRONTIUM-90 IN WASTE WATER — ION EXCHANGE

Analyte: Strontium-89 and strontium-90	**Method No.:** WR190
Matrix: Waste water **Procedure:** Ion exchange and beta counting	**Minimum Detectable Activity:** ^{89}Sr 8 pCi/L ^{90}Sr 6 pCi/L **Accuracy and Precision:** (mean ± 1 sigma) ^{89}Sr 122% ± 18% ^{90}Sr 92% ± 9% **Acceptable Minimum Detectable Activity:** ^{89}Sr 300 pCi/L ^{90}Sr 30 pCi/L
Effective Date: 7/15/85	**Author:** Terry D. Filer

SAFETY NOTE: Before beginning this procedure, read all of the Material Safety Data Sheets for the chemicals listed in Sec. 7. Read Sec. 4.3 of the EM-9 Safety Manual for information on personal protective clothing and equipment.

1. Principle of Method

1.1. Strontium carrier is added to the water sample.

1.2. Strontium is complexed with disodium ethylenediamine tetraacetate and added to a cation exchange resin.

1.3. The ion exchange separation is performed, and the eluted strontium is precipitated as the carbonate.

1.4. Strontium yield is measured gravimetrically, and radiostrontium is measured with a low-background beta counter.

1.5. After a 1- to 2-week ^{90}Y ingrowth period, the carbonate precipitate is redissolved and yttrium carrier is added.

1.6. Yttrium is precipitated as the hydroxide, redissolved, and precipitated as the oxalate.

1.7. Yttrium yield is measured gravimetrically, and radioyttrium is measured with a low-background beta counter.

1.8. Strontium-90 is determined by the amount of ^{90}Y present.

1.9. Strontium-89 is determined by the difference between the total radiostrontium and ^{90}Sr.

2. Sensitivity

2.1. Sensitivity is limited by the counter background.

2.2. For routine measurements with a 30-min counting period and a counting efficiency of 20%, the minimum detection limit (the 95th percentile of the background distribution) is 6 pCi/L for ^{90}Sr.

3. Accuracy and Precision

3.1. Average recovery of ^{89}Sr tracer added to a waste water sample and yield corrected is 122% ± 18% at the 1-nCi/L concentration level.

3.2. Average recovery of ^{90}Sr tracer added to a waste water sample and yield corrected is 92% ± 9% at the 2-nCi/L concentration level.

4. Interferences

4.1. None found in typical samples.

5. Collection and Storage of Samples

5.1. Acidify liquid waste samples to approximately 1.0% with HNO_3 before analysis.

5.2. Analysis must be completed within six months.

6. Apparatus

6.1. Alpha/Beta/Gamma System: Canberra Model 2400, Canberra Industries, Inc., Meriden, Connecticut.

6.2. Beakers: 100-, 600-, and 1000-mL.

6.3. Graduated cylinders: 25- and 250-mL.

6.4. Ion exchange column: glass column, 200-mm-long by 24-mm-o.d., with a reservoir at the top, 250-mm-long by 85-mm-o.d. and a 45° angled taper at the bottom equipped with a standard taper stopcock.

6.5. Centrifuge tubes: 40-mL.

6.6. Centrifuge: equipped with timer and variable speed (0 to 6000 rpm), Damon/IEC Division.

6.7. Chemical fume hood.

6.8. Stirrer: Corning Model PC-351.

6.9. Magnetic stirring bars: 1-in., Teflon-coated.

6.10. Filter paper: 7.0-cm-diam, Whatman No. 541.

6.11. Filter paper: 2.4-cm-diam, Whatman GF/C.

6.12. Filter paper: 7.0-cm-diam, Whatman GF/C.

6.13. Vacuum filtering flask: 1000-mL.

6.14. Filtering chimney: 2.4-cm-diam, stainless steel.

6.15. Analytical balance: .0001- to 200-g capacity, Sartorius.

7. Reagents

7.1. EDTA (6%). Dissolve 120 g of disodium ethylenediamine tetraacetate in distilled water. Dilute to 2 L.

7.2. Calcium nitrate (2 M). Dissolve 236.2 g of $Ca(NO_3)_2 \bullet 4\ H_2O$ in distilled water. Dilute to 500 mL. Filter the solution through a Whatman GF/C, 7.0-cm-diam filter.

7.3. Sodium carbonate (3 N). Dissolve 159 g of Na_2CO_3 in distilled water. Dilute to 1 L.

7.4. Buffer (pH 4.6). Dissolve 200 g of anhydrous sodium acetate in 500 mL of distilled water. Add 385 mL of glacial acetic acid and dilute to 1 L.

7.5. Strontium carrier (20 mg/mL). Dissolve 48.31 g of reagent-grade $Sr(NO_3)_2$ in distilled water. Dilute to 1 L.

7.6. Yttrium carrier (30 mg/mL). Dissolve 32.31 g of reagent-grade $Y(NO_3)_3 \bullet 6\ H_2O$ in distilled water. Dilute to 250 mL.

7.7. Acetic acid (6 M). Dilute 340 mL of glacial acetic acid to 1 L with distilled water.

7.8. Sodium chromate (0.3 M). Dissolve 70.2 g of $Na_2CrO_4 \bullet 4\ H_2O$ in distilled water. Dilute to 1 L.

7.9. Hydrogen peroxide (30%).

7.10. Oxalic acid (dihydrate).

7.11. Oxalic acid (saturated). Dissolve 25 g of oxalic acid dihydrate in 250 mL of water.

7.12. Sodium chloride (4 M). Dissolve 464 g of sodium chloride in distilled water. Dilute to 2 L.

7.13. Hydrochloric acid (1.8 M). Add 300 mL of concentrated hydrochloric acid to distilled water and dilute to 2 L.

8. Calibration and Standards

8.1. Strontium-90/yttrium-90 tracer.

8.1.1. The $^{90}Sr/^{90}Y$ stock solution is a standard reference material (SRM 4919-E) obtained from the National Institute of Standards and Technology.

8.1.2. The tracer solution is prepared in 10% HCl.

8.1.3. Concentration of the tracer is approximately 500 pCi/mL for both ^{90}Sr and ^{90}Y.

8.2. Strontium-89 tracer.

8.2.1. The ^{89}Sr stock solution is a standardized solution obtained from Amersham.

8.2.2. The tracer solution is prepared in 10% HCl.

8.2.3. Concentration of the tracer is approximately 500 pCi/mL.

8.3. Calibration of the beta gas-flow proportional counter.

8.3.1. Yttrium-90 counting efficiency. A series of ^{90}Y standards and a blank are carried through the procedure (see Step 9.2) and counted in the beta gas-flow proportional counter. Calculate the ^{90}Y counting efficiency as follows.

8.3.1.1. Calculate the yttrium yield, YY.

$$YY = \frac{RY}{AY} ,$$

where YY = yttrium yield,
RY = Y carrier recovered as $Y_2(C_2O_4)_3 \bullet 9\ H_2O$ (g), and
AY = Y carrier added as $Y_2(C_2O_4)_3 \bullet 9\ H_2O$ (g).

8.3.1.2. Calculate the ^{90}Y decay factor, YD.

$$YD = e^{-(0.00018) \times T} ,$$

where YD = yttrium decay factor,
e = natural log of 2 (0.693),
0.00018 = λ (.693/half-life), and
T = time between ^{90}Y separation from ^{90}Sr and ^{90}Y counting (min).

8.3.1.3. Calculate the ^{90}Y counting efficiency, CEY.

$$CEY = \frac{Y - BY}{CTY \times YY \times YD \times {}^{90}Y} ,$$

where CEY = ^{90}Y counting efficiency,
Y = ^{90}Y gross count,
BY = blank count,
CTY = counting time (min),
YY = Y yield,
YD = yttrium decay factor, and
^{90}Y = activity of ^{90}Y standard (dpm).

8.3.2. Calculate ^{90}Sr counting efficiency. A series of ^{90}Sr standards and a blank are carried through the procedure (see Steps 9.1.1 to 9.1.12) and counted in the beta gas-flow proportional counter. The ^{90}Sr counting efficiency is calculated using the following equations.

8.3.2.1. Calculate the Sr yield, SY.

$$SY = \frac{RSR}{ASR} ,$$

where SY = strontium yield,
RSR = Sr carrier recovered as $SrCO_3$ (g), and
ASR = Sr carrier added as $SrCO_3$ (g).

8.3.2.2. Calculate the yttrium growth factor, YG′.

$$YG' = e^{-(2.73 \times 10^{-6}) \times T_1} - e^{-(0.0108) \times T_1} ,$$

where YG′ = yttrium growth factor,
e = natural log of 2 (0.693),
2.73×10^{-6} = λ (.693/half-life of ^{90}Sr in h),
0.0108 = λ (.693/half-life of ^{90}Y in h), and
T_1 = time between initial ^{90}Sr separation from ^{90}Y and counting the $SrCO_3$ precipitate (h).

8.3.2.3. Calculate the yttrium contribution to the total count.

$$Y90 = {}^{90}Sr \times SY \times CEY \times YG' ,$$

where Y90 = cpm of ^{90}Y,
^{90}Sr = activity of ^{90}Sr standard (dpm),
SY = Sr yield,
CEY = ^{90}Y counting efficiency, and
YG′ = yttrium growth factor.

8.3.2.4. Calculate the strontium counts, Sr90.

$$Sr90 = \frac{TSR - BSR}{SY \times CTSR} - Y90 ,$$

where Sr90 = cpm of ^{90}Sr,
TSR = total Sr gross count,
BSR = blank count,
SY = Sr yield,
CTSR = counting time (min), and
Y90 = cpm of ^{90}Y.

8.3.2.5. Calculate the ^{90}Sr counting efficiency, CE90.

$$CE90 = \frac{Sr90}{^{90}Sr},$$

where CE90 = ^{90}Sr counting efficiency,
Sr90 = cpm of ^{90}Sr, and
^{90}Sr = activity of ^{90}Sr standard (dpm).

8.3.3. Strontium-89 counting efficiency. A series of ^{89}Sr standards and a blank are carried through Steps 9.1.1 to 9.1.12 and counted in the beta gas-flow proportional counter. The ^{89}Sr counting efficiency is calculated using the following equation:

$$CE89 = \frac{TSR - BSR}{CTSR \times SY \times {}^{89}Sr},$$

where CE89 = ^{89}Sr counting efficiency,
TSR = total Sr gross count,
BSR = blank count,
CTSR = counting time (min),
SY = Sr yield, and
^{89}Sr = activity of ^{89}Sr standard.

9. Procedure

9.1. Chemical isolation of strontium by ion exchange separation.

9.1.1. Filter 250 mL of a liquid waste sample that is 1.0% HNO_3. Add 2 mL of Sr carrier (20 mg/mL).

9.1.2. Add 2 mL of 2 M $Ca(NO_3)_2$.

9.1.3. Add 250 mL of 6% EDTA, and adjust the pH to 4.6 with NH_4OH.

9.1.4. Add 10 mL of pH 4.6 buffer, and adjust the pH to 4.6 with NH_4OH if necessary.

9.1.5. Prepare a resin column (40-mm by 24-mm) using AG 50W-x8, 50- to 100- mesh, hydrogen-form cation exchange resin. Wash the column with 100 mL of water, 300 mL of 4 M NaCl, and 100 mL of water.

9.1.6. Add the solution from Step 9.1.4 to the ion exchange column. Adjust the flow to 12 mL/min.

9.1.7. Prepare a wash solution by combining 125 mL of 6% EDTA with 250 mL of water. Adjust the pH to 5.1 with NH_4OH.

9.1.8. Wash the column at 12 mL/min. Discard all effluents. Record this time as the beginning of ^{90}Y ingrowth.

9.1.9. Wash the columns with 100 mL of water at 12 mL/min. Discard the wash.

9.1.10. Add 280 mL of 1.8 N HCl to the column and elute at 8 mL/min. Discard the first 30 mL of effluent. Collect the next 250 mL.

9.1.11. Add 125 mL of concentrated NH_4OH to the effluent and stir on a magnetic stirrer. Slowly add 10 mL of 3 N Na_2CO_3 and stir for 30 min.

9.1.12. Collect the $SrCO_3$ precipitate on a weighed GF/C, 2.4-cm-diam filter. Wash the precipitate with water and ethanol. Dry and weigh. Count the Sr in the beta gas-flow proportional counter to obtain the total radiostrontium concentration. Record the time when the $SrCO_3$ precipitate is counted.

9.2. Isolation of yttrium-90 daughter.

9.2.1. After a 1- to 2-week ^{90}Y ingrowth period, place the $SrCO_3$ precipitate in a 40-mL centrifuge tube.

9.2.2. Add 10 drops of concentrated HCl and 10 mL of water to the tube.

9.2.3. Add 1 mL of 6 M acetic acid and 1.00 mL of yttrium carrier (30 mg/mL).

9.2.4. Filter the solution through Whatman No. 541, 7.0-cm-diam filter paper into another 40-mL centrifuge tube. Wash the first tube with 5 mL of water and add to the filter in the second centrifuge tube.

9.2.5. Add 0.1 mL of 0.3 M Na_2CrO_4 and place in a hot water bath.

9.2.6. Adjust samples to pH 8 by adding NH_4OH until a precipitate forms.

9.2.7. Add 6 drops of 30% H_2O_2 and heat in a water bath for 1 h.

9.2.8. Adjust the pH to 8 with NH_4OH.

9.2.9. Centrifuge for 5 min at 2400 rpm. Record the hour and date to determine the decay of ^{90}Y. Discard the supernate.

9.2.10. Dissolve the precipitate by adding 6 drops of concentrated HCl. Dilute with 15 mL of water.

9.2.11. Add NH_4OH dropwise until a precipitate forms. Heat for 15 min in a hot water bath.

9.2.12. Centrifuge at 2400 rpm for 5 min. Discard the supernate.

9.2.13. Dissolve the precipitate by adding 5 drops of concentrated HCl, stirring and adding 25 mL of distilled water.

9.2.14. Place in a water bath, add 1 mL of saturated oxalic acid and 2 to 3 drops of NH_4OH. Heat for 15 min.

9.2.15. Adjust the pH to 2 to 3 with additional NH_4OH if needed.

9.2.16. Digest in a hot water bath for 1 h.

9.2.17. Cool. Then collect the precipitate on a weighed GF/C, 2.4-cm-diam filter. Wash with water and then with ethanol.

9.2.18. Count the precipitate in a beta gas-flow proportional counter. Record the time of counting.

10. Operation of Equipment

10.1. Refer to the operating manual for the Alpha/Beta/Gamma System Model 2400.

11. Calculations

11.1. Strontium-90.

11.1.1. Determine the Sr yield.

$$SY = \frac{RSR}{ASR} ,$$

where SY = Sr yield,
RSR = Sr carrier recovered as $SrCO_3$ (g), and
ASR = Sr carrier added as $SrCO_3$ (g).

11.1.2. Determine the Y yield.

$$YY = \frac{RY}{AY} ,$$

where YY = yttrium yield,
RY = Y carrier recovered as $Y_2 (C_2O_4)_3 \bullet 9H_2O$ (g), and
AY = Y carrier added as $Y_2 (C_2O_4)_3 \bullet 9H_2O$ (g).

11.1.3. Determine the Y growth.

$$YG = e^{-(2.73 \times 10^{-6})T_2} - e^{-(0.0108)T_2} ,$$

where YG = yttrium growth,
e = natural log of 2 (0.693),
2.73×10^{-6} = λ (0.693/half-life of ^{90}Sr in h),
0.0108 = λ (0.693/half-life of ^{90}Y in h), and
T_2 = time between the initial ^{90}Sr separation and the separation of ^{90}Y daughter (h).

11.1.4. Determine the Y decay.

$$YD = e^{-(0.0108)T_3} ,$$

where YD = yttrium decay and
T_3 = time between the separation and the counting of the ^{90}Y daughter (h).

11.1.5. Determine the ^{90}Sr in the sample.

$$S90 = \frac{Y - BY}{CTY \times CEY \times MC \times V \times SY \times YY \times YG \times YD} ,$$

where S90 = ^{90}Sr activity (pCi/L),
Y = ^{90}Y gross count,
BY = blank count,
CTY = counting time (min),
CEY = ^{90}Y counting efficiency,
MC = 2.22,
V = sample volume (L),
SY = Sr yield,
YY = Y yield,

YG = ^{90}Y growth, and
YD = ^{90}Y decay.

11.1.6. Determine the uncertainty in the ^{90}Sr activity measurement at the 95% confidence level by propagation of errors for each measurement.

$$U90 = 1.96 \times S90 \times \sqrt{\frac{(Y + BY)}{(Y - BY)^2} + 0.0036} \quad ,$$

where U90 = uncertainty in ^{90}Sr measurement,
1.96 = constant,
S90 = ^{90}Sr activity in the sample (pCi/L),
Y = ^{90}Y gross count,
BY = Y blank count, and
0.0036 = constant.

11.2. Strontium-89

11.2.1. Calculate ^{90}Y growth correction.

$$YG' = e^{-(2.73 \times 10^{-6})T_1} - e^{-(0.0108)T_1} \quad ,$$

where YG′ = ^{90}Y growth correction,
e = natural log of 2 (0.693),
2.73×10^{-6} = λ (0.693/half-life of ^{90}Sr in h),
T_1 = time between initial Sr separation and counting of Sr CO_3 precipitate (h), and
0.0108 = λ (0.693/half-life of ^{90}Y in h).

11.2.2. Calculate ^{89}Sr, cpm.

11.2.2.1. Calculate ^{90}Sr, cpm.

$$Sr90' = S90 \times CE90 \times MC \times SY \quad ,$$

where Sr90′ = ^{90}Sr (cpm),
S90 = ^{90}Sr activity (pCi/L),
CE90 = ^{90}Sr counting efficiency,
MC = 2.22, and
SY = Sr yield.

11.2.2.2. Calculate ^{90}Y, cpm.

$$Y90' = S90 \times MC \times V \times SY \times CEY \times YG' ,$$

where Y90′ = ^{90}Y (cpm),
S90 = ^{90}Sr activity (pCi/L),
MC = 2.22,
V = sample volume (L),
SY = Sr yield,
CEY = ^{90}Y counting efficiency, and
YG′ = ^{90}Y growth correction.

11.2.2.3. Calculate the 89Sr, cpm.

$$Sr89' = \frac{TSR - BSR}{CTSR} - Sr90' - Y90' ,$$

where Sr89′ = ^{89}Sr (cpm),
TSR = total Sr gross count,
BSR = Sr blank count,
CTSR = counting time (min),
Sr90′ = ^{90}Sr (cpm), and
Y90′ = ^{90}Y (cpm).

11.2.3. Determine the concentration of ^{89}Sr in the sample.

$$S89 = \frac{Sr89'}{CE89 \times MC \times V \times SY} ,$$

where S89 = ^{89}Sr in the sample (pCi/L),
Sr89′ = ^{89}Sr (cpm),
CE89 = ^{89}Sr counting efficiency,
MC = 2.22,
V = sample volume (L), and
SY = Sr yield.

11.2.4. Determine the uncertainty in the ^{89}Sr measurement at the 95% confidence level by propagation of errors in each measurement.

11.2.4.1. Calculate the uncertainty in ^{90}Sr activity (cpm).

$$A = Sr90' \times \sqrt{\frac{Y + BY}{(Y - BY)^2} + 0.0091} \quad ,$$

where A = uncertainty in ^{90}Sr (cpm),
Sr90′ = ^{90}Sr (cpm),
Y = ^{90}Y gross count,
BY = Y blank count, and
0.0091 = constant.

11.2.4.2. Calculate the uncertainty in ^{90}Y activity (cpm).

$$B = Y90' \times \sqrt{\frac{Y + BY}{(Y - BY)^2} + 0.0042} \quad ,$$

where B = uncertainty in ^{90}Y (cpm),
Y90′ = ^{90}Y (cpm),
Y = ^{90}Y gross count,
BY = Y blank count, and
0.0042 = constant.

11.2.4.3. Calculate the uncertainty in total Sr activity.

$$Sr = \frac{TSR - BSR}{CTSR} \quad ,$$

where Sr = total Sr (cpm),
TSR = total Sr gross count,
BSR = blank count, and
CTSR = counting time (min).

$$C = Sr \times \sqrt{\frac{(TSR + BSR)}{(TSR - BSR)^2} + 0.000001} \quad ,$$

where C = uncertainty in total Sr (cpm),
Sr = total Sr (cpm),
TSR = total Sr gross count,
BSR = blank count, and
0.000001 = constant.

11.2.4.4. Calculate the uncertainty in ^{89}Sr activity (cpm).

$$USr89 = \sqrt{A^2 + B^2 + C^2} \quad ,$$

where USr89 = uncertainty in ^{89}Sr (cpm),
A = uncertainty in ^{90}Sr (cpm),
B = uncertainty in ^{90}Y (cpm), and
C = uncertainty in total Sr (cpm).

11.2.4.5. Calculate the uncertainty in ^{89}Sr activity (pCi/L) at the 95% confidence level.

$$U89 = 1.96 \times S89 \times \sqrt{\frac{(USr89)^2}{(Sr89')^2} + 0.0091} \quad ,$$

where U89 = uncertainty in ^{89}Sr (pCi/L),
1.96 = constant,
S89 = ^{89}Sr in the sample (pCi/L),
USr89 = uncertainty in ^{89}Sr (cpm),
Sr89′ = ^{89}Sr (cpm), and
0.0091 = constant.

12. Source Materials

12.1. C. R. Porter, N. W. Carter, G. L. Rehnberg, E. W. Pepper, and B. Kahn, *Determination of Radiostrontium in Food and Other Environmental Samples*, 1965.

12.2. *EML Procedures Manual*, 25th ed., H. L. Volchok and G. de Planque, Eds. (Environmental Measurements Laboratory, US Department of Energy, New York, New York, 1982).

12.3. *Analytical Chemistry Branch Procedures Manual*, L. Z. Bodnar and D. R. Percival, Eds. (Radiological and Environmental Sciences Laboratory, US Department of Energy, Idaho Falls, Idaho, 1982).

12.4. *Alpha/Beta/Gamma System Model 2400 Operator's Manual* (Canberra Industries, Inc., Meriden, Connecticut, 1987).

TRITIUM IN WASTE WATER — LIQUID SCINTILLATION COUNTING

Analyte: Tritium	**Method No.:** WR200
Matrix: Waste water	**Minimum Detectable Activity:** 4 pCi/mL
Procedure: Liquid scintillation counting	**Accuracy and Precision:** (mean ± 1 sigma) 96% ± 3% at the 20-nCi/mL level
	Acceptable Minimum Detectable Activity: 3 nCi/mL
Effective Date: 12/16/85	**Author:** Terry D. Filer

SAFETY NOTE: Before beginning this procedure, read all of the Material Safety Data Sheets for the chemicals listed in Sec. 7. Read Sec. 4.3 of the EM-9 Safety Manual for information on personal protective clothing and equipment.

1. Principle of Method

1.1. The sample is pipetted directly into a glass liquid scintillation vial to which a scintillation solution is added.

1.2. The sample is counted for 20 min in a liquid scintillation spectrometer.

2. Sensitivity

2.1. Sensitivity is limited by count length and the detector background.

2.2. For routine measurements with a 20-min count length, the minimum detection limit (2 sigma above background) is 4 pCi/mL, based on a sample size of 2 mL.

3. Accuracy and Precision

3.1. Average recovery of the ^{3}H standard is 96% ± 3% at the 20-nCi/mL level.

4. Interferences

4.1. No interferences shown in routine samples.

5. Collection and Storage of Samples

5.1. Collect samples in polyethylene bottles that are free of contamination.

5.2. No refrigeration is required.

5.3. Analysis must be completed within six months.

6. Apparatus

6.1. Packard Tri-Carb Liquid Scintillation Counter: Model 3255, Packard Instrument Co., Downers Grove, Illinois.

6.2. Glass scintillation counting vials: 25-mL with plastic caps.

6.3. Pipettes: 2-mL, volumetric.

6.4. Filter apparatus: for 0.45-micron membrane filters.

7. Reagents

7.1. Liquid Scintillation Cocktail. United Technologies Packard "Opti-Fluor," Packard Instrument Co., Inc.

8. Calibration and Standards

8.1. The ^{3}H standard supplied by Packard Instrument Co. has been calibrated against a National Bureau of Standards primary standard.

8.2. Prepare a series of secondary ^{3}H standards in the range of 100 to 600 pCi/mL from an Amersham-Searle standard.

8.3. Include a distilled water blank, the Packard ^{3}H standard, a Packard background standard, and four secondary ^{3}H standards with each set of routine samples analyzed.

8.4. Determine the sample counting efficiency by using the external standard channels ratio (ESR) method. A set of ^{3}H standards is provided by Packard for this purpose. See *Packard Model 3255 Liquid Scintillation Spectrometer System Instruction Manual*, Step 3.4.4. Plot ESR vs efficiency.

9. Procedure

9.1. Filter the sample through a 0.45-micron membrane filter with suction.

9.2. Pipette 2.0 mL of filtrate into a 25-mL glass scintillation vial.

9.3. Add 16.0 mL of "Opti-Fluor" cocktail to the glass scintillation vial.

9.4. Shake the vial vigorously for 10 s.

9.5. Place sample, blank, and standard vials in the liquid scintillation spectrometer, and count each vial for 20 min.

10. Operation of the Liquid Scintillation Spectrometer

10.1. Refer to the operating manual for the liquid scintillation spectrometer.

11. Calculations

11.1. Sample counting efficiency. The sample counting efficiency is found by using the ESR printed out for each sample. Read the efficiency from the ESR vs efficiency plot (see Step 8.4).

11.2. Determine the concentration of ^3H in the sample.

$$A = \frac{\dfrac{C_s}{CT_s \times E_s} - \dfrac{C_b}{CT_b \times E_b}}{V \times 2.22} ,$$

Definition	Factor Symbol	Value	Percent Uncertainty
pCi/mL of ^3H	A	Variable	Variable
Gross counts, sample	C_s	Variable	Variable
Gross counts, background	C_b	About 25 cpm	4
Counting time, sample	CT_s	Usually 20 min	0.1
Counting time, background	CT_b	20 min	0.1
Efficiency, sample	E_s	0.2 to 0.5	1
Efficiency, background	E_b	0.6	1
Volume of sample	V	2 mL	1
(2.22 = the factor to convert dpm to pCi)			

11.3. Uncertainty. The uncertainty U is calculated at the 95% confidence level.

$$U = 1.96 \times A \times \sqrt{\frac{C_s + C_b}{(C_s - C_b)^2} + 0.0002} ,$$

where U = uncertainty,
1.96 = constant,

A	=	concentration of ^3H (pCi/mL),
C_s	=	gross counts of sample,
C_b	=	gross counts of background, and
0.0002	=	constant.

12. Source Materials

12.1. *Packard Model 3255 Liquid Scintillation Spectrometer System Instruction Manual* (Packard Instrument Co., Inc., Downers Grove, Illinois, 1977).

12.2. J. A. Gibbs, L. J. Everett, and D. Moore, *Sample Preparation for Liquid Scintillation Counting* (Packard Instrument Co., Inc., Downers Grove, Illinois, 1976).

LA-10300-M, Vol. IV
Manual

Health and Environmental Chemistry: Analytical Techniques, Data Management, and Quality Assurance

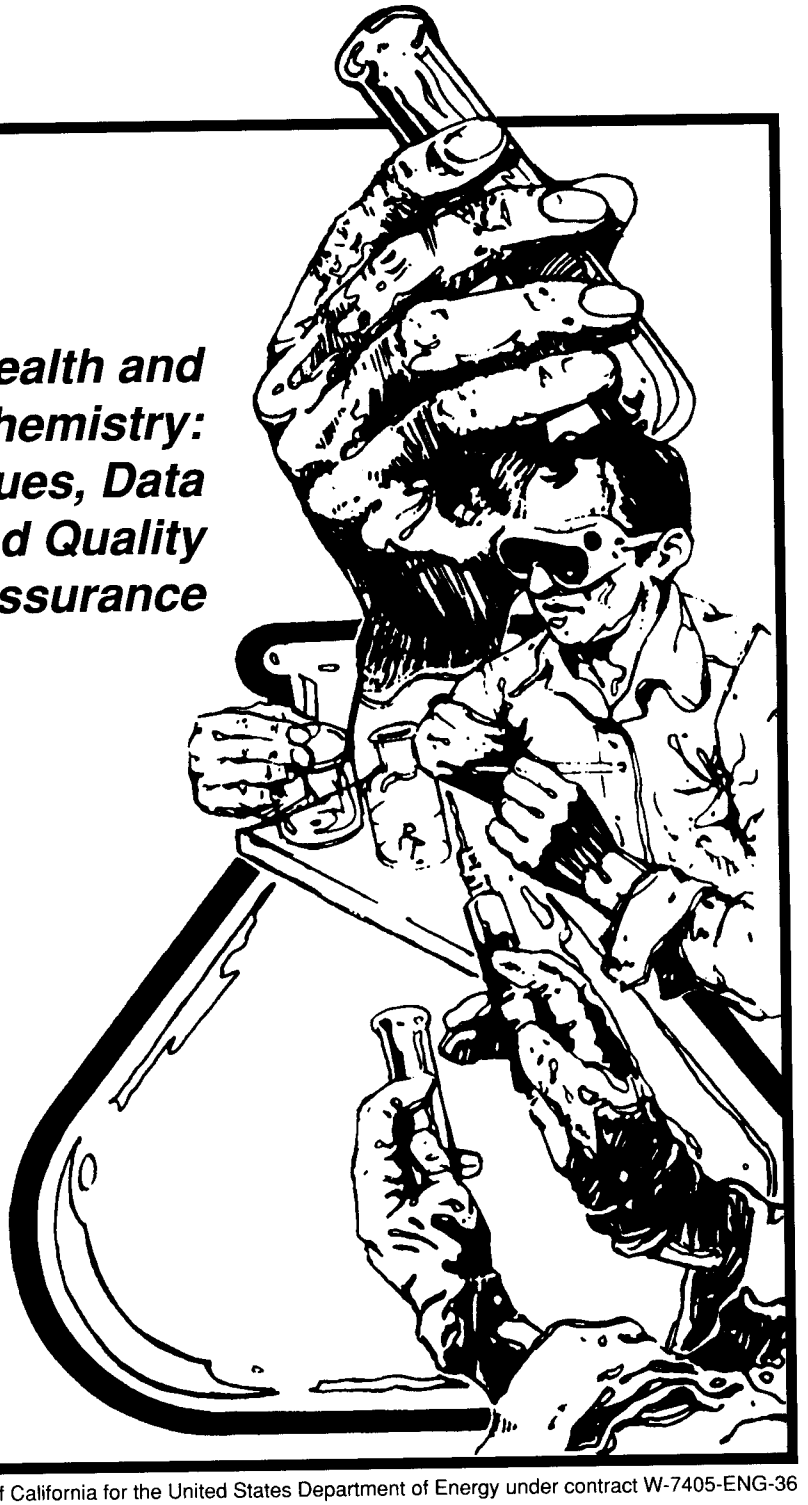

Los Alamos National Laboratory is operated by the University of California for the United States Department of Energy under contract W-7405-ENG-36

Los Alamos
NATIONAL LABORATORY
Los Alamos, New Mexico 87545

Edited by Lori Tamura, Group IS-1
David Compton, Group IS-1
Composition by Liz Stevens, Group EM-9
Cover art by Rod Furan, Group IS-1

An Affirmative Action/Equal Opportunity Employer

This report was prepared as an account of work sponsored by an agency of the United States Government. Neither The Regents of the University of California, the United States Government nor any agency thereof, nor any of their employees, makes any warranty, express or implied, or assumes any legal liability or responsibility for the accuracy, completeness, or usefulness of any information, apparatus, product, or process disclosed, or represents that its use would not infringe privately owned rights. Reference herein to any specific commercial product, process, or service by trade name, trademark, manufacturer, or otherwise, does not necessarily constitute or imply its endorsement, recommendation, or favoring by The Regents of the University of California, the United States Government, or any agency thereof. The views and opinions of authors expressed herein do not necessarily state or reflect those of The Regents of the University of California, the United States Government, or any agency thereof.

LA-10300-M, Vol. IV
Manual

UC-907
Issued: May 1986
Revised: July 1993

Health and Environmental Chemistry: Analytical Techniques, Data Mangement, and Quality Assurance

Edited by Margaret A. Gautier

Los Alamos
NATIONAL LABORATORY
Los Alamos, New Mexico 87545

Quality Control

CONTENTS

Preface QC-5

Acknowledgments QC-7

Abstract QC-9

The page numbering convention used in this manual consists of the specific procedure number (shown at left in list below) followed by the page number for that procedure. Thus, QCI110-2 is page two of procedure QCI110. The right column in the list below gives each procedure's status or effective date.

Quality Control Analytical Techniques

Quality Control Analytical Procedures - Inorganic

QCI100 Beryllium and Lead for Vegetation Ash—QC Sample Preparation 02/93

QCI110 TCLP Elements for Water and Soil—QC Sample Preparation 10/92

QCI120 Oil and Grease in Water—QC Sample Preparation 03/93

QCI130 TCA in Urine—QC Sample Preparation . . . . . In Progress

QCI140 Trace Elements on Filter Media—QC Sample Preparation 09/92

QCI150 Trace Elements in Solvent—QC Sample Preparation 09/92

QCI160 Trace Elements in Urine—QC Sample Preparation . . . . . In Progress

QCI170 Trace Elements in Nitric Acid—QC Sample Preparation 10/92

QCI180 Trace Elements in Hydrochloric Acid—QC Sample Preparation 10/92

QCI190 Trace Elements in Water—QC Sample Preparation 10/92

QCI200 Trace Elements for Water and Soil (Hg by TCLP)—QC Sample Preparation 03/93

QCI210 Trace Elements in Water (CN)—QC Sample Preparation 03/93

QCI220 Trace Elements in Water (NO_2-N)—QC Sample Preparation 03/93

Quality Control Analytical Procedures - Organic

QCO130 Organic Compounds in Tubes and Badges—QC Sample Preparation .. 08/92

QCO170 Polychlorinated Biphenyls in Oil—QC Sample Preparation 07/92

QCO190 Polychlorinated Biphenyls on Soil—QC Sample Preparation 07/92

QCO200 Polychlorinated Biphenyls on Swipes—QC Sample Preparation 03/92

QCO210 Semivolatile Organic Compounds on Soil—QC Sample Preparation ... 08/92

QCO220 Semivolatile Organic Compounds in Water—QC Sample Preparation .. 08/92

QCO250 Volatile Organic Compounds on Soil—QC Sample Preparation 08/92

QCO260 Volatile Organic Compounds in Water—QC Sample Preparation 08/92

Quality Control Analytical Procedures - Radiochemistry

QCR100 Americium-241 in Urine—QC Sample Preparation 09/92

QCR110 Cesium-137 on Soil—QC Sample Preparation 02/93

QCR120 Cesium-137 on Vegetation Ash—QC Sample Preparation 02/93

QCR130 Cesium-137 in Water—QC Sample Preparation 02/93

QCR140 Gross Alpha and Gross Beta on Soil—QC Sample Preparation 03/93

QCR150 Gross Alpha and Gross Beta in Water—QC Sample Preparation 03/93

QCR160 Plutonium and Americium on Soil—QC Sample Preparation 02/93

QCR170 Radionuclides on Vegetation Ash—QC Sample Preparation 02/93

QCR180 Plutonium and Americium in Water—QC Sample Preparation 02/93

QCR190 Plutonium-238 in Urine—QC Sample Preparation 09/92

QCR200	Plutonium-239 in Urine—QC Sample Preparation	09/92
QCR210	Radionuclides on Filter Media—QC Sample Preparation	03/93
QCR220	Radium-226 in Water—QC Sample Preparation	02/93
QCR230	Strontium-90 on Soil—QC Sample Preparation	02/93
QCR240	Strontium-90 in Water—QC Sample Preparation	09/92
QCR250	Tritium and Percent Moisture on Soil—QC Sample Preparation	02/93
QCR260	Tritium in Urine—QC Sample Preparation	09/92
QCR270	Tritium in Water—QC Sample Preparation	03/93
QCR280	Uranium in Soil—QC Sample Preparation	02/93
QCR290	Uranium-235 in Urine—QC Sample Preparation	Retired
QCR300	Uranium-238 in Urine—QC Sample Preparation	Retired

Miscellaneous Procedures

	General Procedure for Cleaning Laboratory Equipment	In Progress
QCM200	Preparation of a Vegetation Ash Matrix	03/93

Quality Control Analytical Procedures - Intercomparison Studies

QCS100	EPA Air Filter Intercomparison Study	In Progress
QCS110	DOE Beryllium Intercomparison Study	In Progress
QCS120	EPA Drinking Water Study	In Progress
QCS130	EPA Gamma in Water Intercomparison Study	In Progress
QCS140	EPA Gross Alpha/Beta in Water Intercomparison Study	In Progress
QCS150	EPA Performance Evaluation Study	In Progress
QCS160	NPDES Study	In Progress

QCS170	NIOSH PAT Program	In Progress
QCS180	EPA Plutonium in Water Intercomparison Study	In Progress
QCS190	EML Quality Assessment Program	In Progress
QCS200	EPA Radionuclides in Milk Intercomparison Study	In Progress
QCS210	EPA Radium in Water Intercomparison Study	In Progress
QCS220	EPA Strontium in Water Intercomparison Study	In Progress
QCS230	EPA Tritium in Water Intercomparison Study	In Progress
QCS240	EPA Uranium in Water Intercomparison Study	In Progress
QCS250	EPA Water Pollution Study	In Progress

ACKNOWLEDGMENTS

The encouragement, leadership, and support offered by Group EM-9 management are appreciated. The information provided by the organic analysis section during the development of the organic QC preparation procedures is gratefully acknowledged. The general contributions of the following individuals in developing, evaluating, or writing the methods contained herin are formally acknowledged:

Margaret A. Gautier, Quality Assurance and Data Management Section Leader
Ernest S. Gladney
Nancy L. Koski
William D. Moss

The section is prepared in loose-leaf form to facilitate revisions of the procedures and the inclusion of additional procedures. Requests for clarification or for help in resolving difficulties encountered while using the procedures are welcome.

Margaret A. Gautier
Editor

ACKNOWLEDGMENTS

The encouragement, leadership, and support offered by Group EM-9 management are appreciated. The information provided by the organic analysis section during the development of the organic QC preparation procedures is gratefully acknowledged. The general contributions of the following individuals in developing, evaluating, or writing the methods contained herin are formally acknowledged:

Margaret A. Gautier, Quality Assurance and Data Management Section Leader
Nancy L. Koski
William D. Moss

The section is prepared in loose-leaf form to facilitate revisions of the procedures and the inclusion of additional procedures. Requests for clarification or for help in resolving difficulties encountered while using the procedures are welcome.

Margaret A. Gautier
Editor

Quality Assurance
QC Sample Preparation Techniques

Edited by

Margaret A. Gautier

ABSTRACT

This section of the manual has been prepared to document the quality control methodology used by the Los Alamos National Laboratory's Environmental Chemistry Group (EM-9). It is part of the overall quality control effort to support the health, safety, and environmental programs at the Laboratory. The section provides organic, inorganic, and radiochemistry quality control sample preparation procedures used to QC the routine analytical work performed by EM-9. The QC preparation procedures were developed by staff within the Quality Assurance Section and have been used over several years to test their validity. QC samples prepared using these methods will fall within the calibration ranges of EM-9 analytical procedures. The QC methods utilize equipment and skills available in modern analytical chemistry laboratories. Precision and accuracy statements are provided for each procedure and analytical data is provided where data are available. Each procedure is presented in a simple and concise manner and includes sections on apparatus, reagent preparation, calibration methods, and data calculation formulas.

BERYLLIUM AND LEAD FOR VEGETATION ASH – QC SAMPLE PREPARATION

Analyte: Beryllium, lead	**Method No.:** QCI100
Matrix: Soil	**Spike Range:** Be 10-20 μg/g Pb 20-100 μg/g
Procedure: Inductively coupled plasma mass spectrometry (ICPMS)	**Accuracy and Precision:** Be 100% ± 4.0% RSD Pb 100% ± 6.4% RSD
Effective Date: 03/22/89	**Authors:** Nancy L. Koski

SAFETY NOTE: Before beginning this procedure, read all of the Material Safety Data Sheets for the standards listed in Sec. 6. Read Sec. 4.3 of the EM-9 Safety Manual for information on personal protective clothing and equipment. Read Sec. 9 of this procedure and Source Material 10.4 for proper waste disposal practices.

1. Principle of Method

1.1. Vegetation ashes were tested for use as a suitable matrix for QC samples for the analysis of Be and Pb. No vegetation ash samples were acceptable because of generally high Be and low Pb recovery from the spiked ash samples. Although it is desirable to match the matrix of the QC sample to that of the samples to be analyzed, it has not yet been possible to match the matrix for this determination.

1.2. A soil with a certified Pb concentration in the desired spike range and a low noncertified Be concentration was chosen from our library of reference materials. This material is overspiked with Be and used as a QC sample for the analysis of Be and Pb in vegetation ash.

1.3. QC samples are submitted for analysis with each analytical batch and are analyzed along with the unknown samples using the same analytical procedure.

2. Accuracy and Precision

2.1. Propagated error for beryllium.

2.1.1. The propagated error on QC preparation is based on the calibration error of the standard and on the error associated with use of the pipette and of the balance. A relative standard deviation (RSD) of 4.0% at the 1σ level has been calculated for the calibration, spiking, and weighing process based on the following function:

$$D = \frac{M1 \times M2}{M3} ,$$

where D = calculated result,
M1 = calibration error,
M2 = spiking error, and
M3 = weighing error.

2.1.2. Calculate relative variance using the following equation.

$$R_M^2 = \frac{\sigma^2}{\overline{X}^2} ,$$

where $R^2{}_M$ = relative variance,
M = $M_1 \ldots M_n$ (variable),
σ^2 = variance (std dev^2), and
$\overline{X}$ = mean value of each variable (M).

2.1.3. Calculate percent relative standard deviation using the following equation.

$$S_{D_T} = \sqrt{R_{M1}^2 + R_{M2}^2 + R_{M3}^2} \times 100 ,$$

where S_{D_T} = relative standard deviation (% error),
$R^2{}_{M1}$ = relative variance of standard,
$R^2{}_{M2}$ = relative variance of pipette, and
$R^2{}_{M3}$ = relative variance of balance.

2.2. Propagated error for lead.

2.2.1. The propagated error on QC preparation is based on the calibration error of the standard and on the error associated with use of the balance. An RSD of 6.4% has been calculated for the calibration and weighing process based on the following function.

$$D = M1 \times M2 \quad ,$$

where D = calculated result,
M1 = calibration error, and
M2 = weighing error.

2.2.2. Calculate relative variance using the following equation.

$$R_M^2 = \frac{\sigma^2}{\overline{X}^2} \quad ,$$

where R^2_M = relative variance,
M = $M_1 \ldots M_n$ (variable),
σ^2 = variance (std dev^2), and
$\overline{X}$ = mean value of each variable (M).

2.2.3. Calculate percent relative standard deviation using the following equation.

$$SD_T = \sqrt{R_{M1}^2 + R_{M2}^2} \times 100 \quad ,$$

where SD_T = relative standard deviation (% error),
R^2_{M1} = relative variance of standard, and
R^2_{M2} = relative variance of balance.

2.3. Analysis by ICPMS of QC samples prepared during 1989 and 1990 using this procedure (N = 2) gave a mean recovery of 115% ± 2% for Be and 82% ± 4% for Pb at the 1σ level. The data are published in Source Materials 9.1 and 9.2.

3. Collection and Storage of Samples

3.1. Quality-control soil samples for the determination of Be and Pb are stored in Teflon beakers at room temperature pending analysis.

4. Apparatus

4.1. Beakers: 250-mL, Teflon.

4.2. Auto-pipette: 100-μL, Rainin or equivalent.

4.3. Pipette tips: disposable.

4.4. Balance: 200-g minimum capacity, 0.1-mg accuracy.

4.5. Spatula.

4.6. Aluminum foil.

4.7. Labels printed with QC sample numbers.

5. Reagents

5.1. No reagents are required.

6. Calibration and Standards

6.1. The soil selected as a matrix for Be and Pb QCs should have a certified Pb concentration (28.2 ± 1.8 μg/g) in the desired range and a noncertified Be concentration (1.5 μg/g) of less than 5 μg/g, such as National Institute of Standards and Technology (NIST) 1646, Estuarine Sediment.

6.2. Obtain a standard such as the 1000-μg/mL Be solution from Spex Industries, Inc., 3880 Park Avenue, Edison, NJ 08820 and dilute to 100 μg/mL to overspike the certified soil.

7. Procedure

7.1. Prepare QC samples to equal at least 10% of the total number of samples to be analyzed. With each set of certified soil QC samples overspiked with Be, submit 0.25 g of the same certified soil not overspiked with Be to determine the Be concentration in the certified soil matrix. This will later be subtracted by the analyst from the Be concentration of the overspiked QC sample.

7.2. Place a Teflon beaker on the balance. Tare the balance.

7.3. Accurately weigh 0.25 g of the selected soil into the beaker. Record the weight of the soil on the beaker for reference by the analyst.

7.4. Spike an aliquot of 100-μg/mL Be standard solution on the soil so that the concentration of the Be overspike, minus the Be concentration present in the reference material, falls into the desired spike range.

7.5. Accurately weigh an additional 0.25 g of the reference material to be used to determine the amount of Be present in the reference material and mark it as the nonspiked sample.

7.6. Because a paper label does not adhere well to a Teflon beaker, write the QC sample number on the beaker. Destroy the paper label associated with the sample number used.

7.7. Cover the beaker with aluminum foil and store at room temperature pending analysis.

7.8. The concentration of Pb in the QC sample is the certified Pb concentration listed for the reference material.

7.9. The concentration of Be in the QC sample is the concentration of the overspike only. The analyst determines the Be concentration in the unspiked certified soil and subtracts that concentration from the total Be concentration in the overspiked QC sample to obtain the concentration of the Be overspike.

7.10. Record QC standard information, sample number, sample description, spike amount, concentration, uncertainty, and all calculations in the QC Laboratory notebook and enter them into the CVS and CVD databases on the VAX.

8. Calculations

8.1. Record the certified concentration and uncertainty of Pb in the reference material as the concentration of Pb in the QC sample (μg/g).

8.2. Record the concentration of Be in the QC sample as the concentration of the Be overspike only, not as the sum of the Be overspike and the noncertified Be concentration in the soil matrix material (μg/g). The total Be concentration equals the Be concentration in the sample overspike plus the Be concentration of the certified soil.

8.3. Calculate spike concentration as in the following example.

8.3.1. If 0.2505 g of NIST 1646, Estuarine Sediment, with a certified Pb concentration of 28.2 ± 1.8 μg/g and a noncertified Be concentration of 1.5 μg/g, is overspiked with 30 μL of a 100-μg/mL Be standard, the concentration of Pb in the QC sample will be 28.2 μg/g and the concentration of the Be overspike in the QC sample will be 12 μg/g. Multiply the result by the RSD calculated in Steps 2.1 and 2.2 to obtain the uncertainty.

$$\frac{(100\ \mu g/mL)\ (1\ mL/1000\ \mu L)\ (30\ \mu L)}{0.2505\ g} = 12\ \mu g/g$$

9. Proper Waste Disposal Practices

9.1. Solid waste.

9.1.1. Solid waste contaminated with hazardous chemicals above the level of concern is not generated during the routine preparation of QC samples for analysis for inorganic contaminants.

9.1.2. If a solid waste is generated that may be contaminated at a level of concern, the appropriate paperwork is completed on a case by case basis.

9.1.2.1. A Waste Profile Request Form (WPRF) is completed describing the solid waste and is sent to the waste management group for review.

9.1.2.2. If the Waste Management group determines that the solid waste is contaminated below the level of concern, the waste is disposed of as ordinary laboratory trash.

9.1.2.3. If the Waste Management group determines that the solid waste is contaminated above the level of concern, pickup of the contaminated waste is requested as described in Sec. 9.3.

9.2. Liquid waste.

9.2.1. Liquid waste containing hazardous contaminants, such as solutions of trace metals, is accumulated in a coated glass bottle in a secondary containment tray and is kept segregated from liquid waste contaminated with organic or radioactive substances or cyanide.

9.2.2. The bottle is labeled with a hazardous waste label and a label indicating its use for trace metal waste.

9.2.3. The bottle is opened only for the period of time necessary to add waste to it.

9.2.4. When the bottle is full, it is capped and kept in the secondary containment tray pending pickup by the Waste Management group.

9.2.5. A new bottle is labeled for further use.

9.3. Waste pickup.

9.3.1. Pickup by the Waste Management group of solid waste or a full bottle of liquid waste containing trace metals is requested using the current Chemical Waste Disposal Request form (CWDR). The current Waste

Profile Request Form (WPRF) which describes the waste is referenced on the CWDR.

9.3.2. The Waste Management group picks up the waste for disposal in accord with Laboratory policy.

10. Source Materials

10.1. M. A. Gautier, E. S. Gladney, N. L. Koski, M. B. Phillips, E. A. Jones, and B. T. O'Malley, "Quality Assurance for Health and Environmental Chemistry: 1989," Los Alamos National Laboratory report LA-11995-MS (1990).

10.2. M. A. Gautier, E. S. Gladney, N. L. Koski, E. A. Jones, and B. T. O'Malley, "Quality Assurance for Health and Environmental Chemistry: 1990," Los Alamos National Laboratory report LA-12208-MS (1991).

10.3. National Institute of Standards and Technology, "Certificate of Analysis for Standard Reference Material 1646, Estuarine Sediment" (National Institute of Standards and Technology, Washington, DC, June 1982).

10.4. "Chemical, Hazardous, and Mixed Waste," Administrative Requirement 10-3, in *Environment, Safety, and Health Manual*, Los Alamos National Laboratory Manual, Chapter 1 (most recent edition).

Revisions or additions to the procedure are marked (▒▒▒▒). Where a section heading is marked, the entire section has been revised.

TCLP ELEMENTS FOR WATER AND SOIL — QC SAMPLE PREPARATION

Analyte: Ba, Cd, Cr, Pb, As, Se, Ag	**Method No.:** QCI110
Matrix: Water, soil	**Spike Range:** 0.010-30 mg/L, dependent on the analyte and analytical method (see Step 1.5)
Procedure: TCLP followed by ICPAES, FAA, or ETVAA	**Accuracy and Precision:** 100% ± 4.2% RSD for all metals
Effective Date: 07/07/89	**Authors:** Nancy L. Koski Margaret A. Gautier

SAFETY NOTE: Before beginning this procedure, read all of the Material Safety Data Sheets for the chemicals listed in Sec. 5. Read Sec. 4.3 of the EM-9 Safety Manual for information on personal protective clothing and equipment. Read Sec. 9 of this procedure and Source Material 10.3 for proper waste disposal practices.

1. Principle of Method

1.1. Acidified water is spiked with standard solutions of the metals extracted by the Toxicity Characteristic Leaching Procedure (TCLP).

1.2. The acidified water QC sample represents the solution resulting from the extraction of TCLP metals from a soil matrix.

1.3. QC samples are submitted for analysis with each analytical batch and are analyzed along with the unknown samples using the same analytical procedure or those sections of the procedure that are applicable.

1.4. The methods of analysis for seven TCLP metals include electrothermal vaporization atomic absorption (ETVAA) spectroscopy, flame atomic absorption (FAA) spectroscopy, and inductively coupled plasma atomic emission spectrometry (ICPAES).

1.5. The QC spike range depends on the metal of interest and on the method of analysis. Refer to the following table for spike ranges.

SPIKE RANGES FOR TCLP METALS			
Analyte	FAA (mg/L)	ETVAA (mg/L)	ICPAES (mg/L)
Ag	0.25-1.0	-	0.3-6
As	-	0.01-0.06	1.5-30
Ba	2.0-8.0	-	0.2-5
Cd	0.5-1.5	0.001-0.005	0.2-3
Cr	0.5-1.5	0.01-0.06	0.3-6
Pb	0.5-1.5	0.01-0.06	2-30
Se	-	0.01-0.06	2-30

1.6. Mercury is included as a TCLP metal but is prepared separately. The Hg standard solution must be stored in a glass container with $Cr_2O_7^{=}$ added to stabilize the Hg. Refer to QC procedure QCI200 for the preparation and storage of Hg QC samples.

2. Accuracy and Precision

2.1. The propagated error on QC preparation is based on the error of the standard and on the error associated with use of the pipette and the volumetric flask. A relative standard deviation (RSD) of 4.2% at the 1σ level has been calculated for the error of the standard and for the spiking and dilution process based on the following function:

$$D = \frac{M1 \times M2}{M3} ,$$

where D = calculated result,
M1 = standard error,
M2 = spiking error, and
M3 = dilution error.

2.1.1. Calculate relative variance using the following equation.

$$R_M^2 = \frac{\sigma^2}{\overline{X}^2} ,$$

where R^2_M = relative variance,
M = $M_1 \ldots M_n$ (variable),
σ^2 = variance (std dev^2), and
$\overline{X}$ = mean value of each variable (M).

2.1.2. Calculate percent relative standard deviation using the following equation.

$$SD_T = \sqrt{R^2_{M1} + R^2_{M2} + R^2_{M3}} \times 100 \quad ,$$

where SD_T = relative standard deviation (% error),
R^2_{M1} = relative variance of standard,
R^2_{M2} = relative variance of pipette, and
R^2_{M3} = relative variance of volumetric flask.

2.1.3. All variables contributing to the error associated with the preparation of these QC samples were considered. The largest errors were used in the error propagation calculations.

2.2. Analytical results from QC samples prepared between 1989 and 1991 using this procedure and analyzed by ICPAES, FAA, or ETVAA are tabulated below. The data are published in Source Materials 10.1 and 10.2.

SPIKE RECOVERY DATA FOR TCLP METALS

	1989 mean ± SD (%)	N[a]	1990 mean ± SD (%)	N[a]	1991 mean ± SD (%)	N[a]
Water						
Ag	102 ± 19	(31)	99 ± 15	(65)	99 ± 9	(167)
As	101 ± 17	(32)	97 ± 18	(67)	102 ± 10	(119)
Ba	98 ± 18	(33)	105 ± 16	(73)	101 ± 12	(159)
Cd	98 ± 7	(30)	99 ± 8	(72)	102 ± 9	(171)
Cr	98 ± 14	(27)	104 ± 13	(60)	102 ± 7	(179)
Pb	95 ± 14	(41)	105 ± 32	(70)	102 ± 7	(199)
Se	98 ± 10	(32)	100 ± 8	(74)	100 ± 10	(134)
Soil						
Ag	102 ± 4	(5)	94 ± 30	(5)	—	
As	98 ± 7	(5)	100 ± 12	(6)	—	
Ba	104 ± 17	(9)	71 ± 40	(7)	—	
Cd	80 ± 30	(8)	99 ± 11	(8)	—	
Cr	97 ± 24	(7)	99 ± 14	(7)	—	
Pb	97 ± 9	(12)	102 ± 15	(6)	—	
Se	99 ± 15	(5)	95 ± 12	(6)	—	

[a] N = number of samples.

3. Collection and Storage of Samples

3.1. QC samples are prepared in a volumetric flask and are aliquoted into high-density polyethylene bottles for storage at room temperature pending analysis.

3.2. If any of the metal standard solutions contain HCl, they may not be added to a solution containing Ag because the Ag will be lost as insoluble AgCl. Prepare the Ag QC sample separately. The other metals may be prepared together in one QC sample.

3.3. Silver standards must be protected from light to prevent reduction and subsequent loss of Ag. Store the Ag standards at room temperature in an amber high-density polyethylene bottle or in an uncolored high-density polyethylene bottle completely wrapped in aluminum foil.

4. Apparatus

4.1. Flasks: 500-mL, volumetric, glass, class A.

4.2. Auto-pipette: 100- and 1000-μL, Rainin or equivalent.

4.3. Pipette tips: disposable.

4.4. Pipettes: 2-, 3-, 4-, 5-, 10-, and 15-mL, glass, volumetric, class A.

4.5. Graduated cylinder: 25-mL.

4.6. Bottles: 125-mL, high-density polyethylene.

4.7. Aluminum foil.

4.8. Bottles: 125-mL, amber, high-density polyethylene.

4.9. Labels printed with QC sample numbers.

5. Reagents

5.1. Nitric acid (16 M, low-temperature redistilled).

5.2. Water. Double-deionized, >10-MΩ/cm resistivity, specified in document ASTM-D1193 as ASTM Type I water and referred to in this procedure as double-deionized water.

6. Calibration and Standards

6.1. Spectroscopy-grade metal standards (100-10,000 μg/mL) such as those from Spex Industries, Inc., 3880 Park Avenue, Edison, NJ 08820.

6.2. If a more dilute standard is needed to reach the desired spike range, dilute a concentrated standard, taking care to match the type and concentration of acid in the dilution to those in the concentrated standard.

7. Procedure

7.1. Prepare QC samples to equal at least 10% of the number of samples to be analyzed. Periodically omit one or more metals from the acidified standard to serve as a blank QC for those metals.

7.2. This procedure describes the preparation of five 100-mL aliquots of a QC sample. QC samples may be prepared in larger or smaller quantities than described in this procedure. Adjust apparatus size as necessary.

7.3. Place approximately 400 mL of double-deionized water into a 500-mL volumetric flask.

7.4. Add 15 mL of 16 M low-temperature redistilled nitric acid to the water to produce a final acid concentration of 3% by volume.

7.5. Use a new disposable pipette tip to spike each metal standard solution into the QC sample to avoid contamination of the standards. Spike an aliquot of each TCLP metal standard solution into the acidified water in the flask to reach the desired spike range for that metal.

NOTE: If any of the metal standard solutions used to make the QC sample contain HCl, do not include Ag in the QC sample because it will be lost as insoluble AgCl. Prepare a separate QC sample for Ag as described in Step 7.9.

7.6. Dilute the QC sample to volume with double-deionized water. Mix by inversion.

7.7. Divide the QC sample evenly among five 125-mL high-density polyethylene bottles. If Ag has been included in the sample, use amber high-density polyethylene bottles or wrap uncolored bottles completely in aluminum foil.

7.8. Label each bottle with a QC sample number and store at room temperature pending analysis. The same QC number may be used for all aliquots of a QC sample from the same 500-mL volumetric flask.

7.9. If any of the metal standard solutions used to make the QC sample contain HCl, prepare a separate Ag QC sample as follows.

7.9.1. Place approximately 400 mL of double-deionized water into a 500-mL volumetric flask.

7.9.2. Add 15 mL of 16 M low-temperature redistilled nitric acid to produce a final acid concentration of 3% by volume.

7.9.3. Spike an aliquot of Ag standard solution into the acidified water in the flask to reach the desired spike range.

7.9.4. Dilute the QC sample to volume with double-deionized water. Mix by inversion.

7.9.5. To prevent the loss of Ag, divide the QC sample evenly among five 125-mL amber high-density polyethylene bottles or among uncolored high-density polyethylene bottles completely wrapped in aluminum foil.

7.9.6. Label each bottle with a QC sample number and store at room temperature pending analysis. The same QC sample number may be used for all aliquots of a QC sample from the same 500-mL volumetric flask.

7.10. Record QC standard information, sample number, sample description, spike amount, concentration, uncertainty, and all calculations in the QC Laboratory notebook and enter them into the CVS and CVD data bases on the VAX.

8. Calculations

8.1. Record the concentration of each metal in the QC sample as μg/L or mg/L.

8.2. Calculate the spike concentration for each metal in the QC sample as in the following example.

8.2.1. If 250 μL of a 100-μg/mL Se standard is used to spike 400 mL of acidified water and the solution is diluted to 500 mL, the concentration of Se in the sample is 50 μg/L. Multiply the result by the RSD calculated in Step 2.1 to obtain the uncertainty.

$$\frac{(100\ \mu g/mL)\ (1\ mL/1000\ \mu L)\ (250 \mu L)}{(500\ mL)\ (1\ L/1000\ mL)} = 50\ \mu g/L$$

9. Proper Waste Disposal Practices

9.1. Solid Waste

9.1.1. Solid waste contaminated with hazardous chemicals above the level of concern is not generated during the routine preparation of QC samples for analysis for inorganic contaminants.

9.1.2. If a solid waste is generated that may be contaminated at a level of concern, the appropriate paperwork is completed on a case-by-case basis.

9.1.2.1. A Waste Profile Request Form (WPRF) describing the solid waste is completed and sent to the Waste Management Group for review.

9.1.2.2. If the Waste Management Group determines that the solid waste is contaminated below the level of concern, the waste is disposed of as ordinary laboratory trash.

9.1.2.3. If the Waste Management Group determines that the solid waste is contaminated above the level of concern, pickup of the contaminated waste is requested as described in Sec. 9.3.

9.2. Liquid Waste

9.2.1. Liquid waste containing hazardous contaminants, such as solutions of trace metals, is accumulated in a coated glass bottle in a secondary containment tray and is kept segregated from liquid waste contaminated with organic or radioactive substances or cyanide.

9.2.2. The bottle is labeled with a hazardous waste label and a label indicating its use for trace-metal waste.

9.2.3. The bottle is opened only for the period of time necessary to add waste to it.

9.2.4. When the bottle is full, it is capped and kept in the secondary containment tray pending pickup by the Waste Management Group.

9.2.5. A new bottle is labeled for further use.

9.3. Waste Pickup

9.3.1. Pickup by the Waste Management Group of solid waste or a full bottle of liquid waste containing trace metals is requested using the current Chemical Waste Disposal Request form (CWDR). The current Waste

Profile Request Form (WPRF) that describes the waste is referenced on the CWDR.

9.3.2. The Waste Management Group picks up the waste for disposal in accord with Laboratory policy.

10. Source Materials

10.1. M. A. Gautier, E. S. Gladney, N. L. Koski, M. B. Phillips, E. A. Jones, and B. T. O'Malley, "Quality Assurance for Health and Environmental Chemistry: 1989," Los Alamos National Laboratory report LA-11995-MS (1990).

10.2. M. A. Gautier, E. S. Gladney, N. L. Koski, E. A. Jones, and B. T. O'Malley, "Quality Assurance for Health and Environmental Chemistry: 1990," Los Alamos National Laboratory report LA-12208-MS (1991).

10.3. "Chemical, Hazardous, and Mixed Waste," Administrative Requirement 10-3, in *Environment, Safety, and Health Manual*, Los Alamos National Laboratory Manual, Chapter 1 (most recent edition).

Revisions or additions to the procedure are marked (). Where a section heading is marked, the entire section has been revised.

OIL AND GREASE IN WATER — QC SAMPLE PREPARATION

Analyte: Oil and grease	**Method No.:** QCI120
Matrix: Water	**Spike Range:** 20-100 mg/L
Procedure: Gravimetry	**Accuracy and Precision:** 100% ± 0.8%
Effective Date: 02/02/90	**Authors:** Nancy L. Koski Margaret A. Gautier

SAFETY NOTE: Before beginning this procedure, read all of the Material Safety Data Sheets for the chemicals listed in Sec. 5. Read Sec. 4.3 of the EM-9 Safety Manual for information on personal protective clothing and equipment. Read Sec. 9 of this procedure and Source Material 10.2 for proper waste disposal practices.

1. Principle of Method

1.1. Distilled water is spiked with vegetable oil to prepare a QC sample for oil and grease in water.

1.2. QC samples are submitted for analysis with each analytical batch and are analyzed along with the unknown samples using the same analytical procedure.

2. Accuracy and Precision

2.1. The propagated error on QC preparation is based on the error of the balance. Since the analyst takes the sample to dryness, it is not necessary to dilute the sample to exactly one liter and the assumption is made that L = 1. A relative standard deviation (RSD) of 0.8% at the 1σ level has been calculated for the weighing process based on the following function:

$$D = \frac{M1}{L} ,$$

where D = calculated result,
M1 = weighing error, and
L = 1.

2.1.1. Calculate relative variance using the following equation.

$$R_M^2 = \frac{\sigma^2}{\overline{X}^2} ,$$

where R^2_M = relative variance,
M = $M_1 \ldots M_n$ (variable),
σ^2 = variance (std dev^2), and
$\overline{X}$ = mean value of each variable (M).

2.1.2. Calculate percent relative standard deviation using the following equation.

$$S_{D_T} = \sqrt{R^2_{M1} / L} \times 100 ,$$

where S_{D_T} = relative standard deviation (% error),
R^2_{M1} = relative variance of balance, and
L = 1.

2.2. Analysis by gravimetry of QC samples (N = 13) prepared during 1990 using this procedure gave a mean recovery of 91% ± 8%. The data are published in Source Material 10.1.

3. Collection and Storage of Samples

3.1. QC samples are prepared in 1-L jars with Teflon-lined lids and are refrigerated pending analysis.

4. Apparatus

4.1. Glass jars: 1-L, with Teflon-lined screw-cap lids.

4.2. Weighing dish: small, polyethylene.

4.3. Sample dropper: glass or polyethylene.

4.4 Balance: 100-g minimum capacity, 0.1-mg accuracy.

4.5. Labels printed with QC sample numbers.

5. Reagents

5.1. Freon. Used to transfer the oil into the water.

6. Calibration and Standards

6.1. Spike QC samples with a pure vegetable oil, such as one used in cooking.

7. Procedure

7.1. Prepare QC samples to equal at least 10% of the total number of samples to be analyzed. Periodically include 3 mL of Freon in 1 L of distilled water in a jar with a Teflon-lined lid to be used as a blank.

7.2. Place a small polyethylene weighing dish on the balance. Tare the balance.

7.3. Using a sample dropper, add vegetable oil to the weighing dish to reach the desired spike range and record the weight.

7.4. Fill a 1-L glass jar nearly full of distilled water. The analyst will use the entire sample, assuming the volume to be 1 L.

7.5. Using a clean sample dropper and less than 3 mL of Freon, quantitatively transfer the oil from the weighing dish into the water in the 1-L jar.

7.6. Place the Teflon-lined lid on the jar and label it with a QC sample number.

7.7. Record QC standard information, sample number, sample description, spike amount, concentration, uncertainty, and all calculations in the QC Laboratory notebook and enter the information into the CVS and CVD databases on the VAX.

8. Calculations

8.1. Record the concentration of oil and grease in the water as mg/L.

8.2. Calculate the spike concentration as in the following example.

8.2.1. If 50 mg of vegetable oil is quantitatively transferred into 1 L of distilled water, the oil and grease concentration in the water is 50 mg/L. Multiply the result by the RSD calculated in Step 2.1 to obtain the uncertainty.

9. Proper Waste Disposal Practices

9.1. The hazardous components of an oil and grease sample are organic compounds. Dispose of waste as waste contaminated with organic compounds.

9.2. Solid waste.

9.2.1. Accumulate solid waste, such as paper wipes, glass or plastic pipettes, empty vials, and incorrectly spiked QC samples contaminated with organic compounds in a covered metal can lined with a plastic bag. Keep this segregated from PCB-contaminated solid waste and solid waste that is not contaminated with organic compounds.

9.2.2. Label the can with a hazardous waste label and a label indicating its use for waste contaminated with organic compounds.

9.2.3. Open the can only for the period of time necessary to add waste to it.

9.2.4. When the plastic bag is full, seal it with tape, remove it from the can, and identify it as waste contaminated with organic compounds.

9.2.5. Place a new plastic bag into the waste can for continued use.

9.2.6. Accumulate the sealed bags in a larger container lined with a plastic bag and approved for the storage and transport of waste contaminated with organic compounds.

9.2.7. Send a reference to the current Waste Profile Request form (WPRF) describing the waste along with the sealed bag.

9.2.8. Label the larger container with a hazardous waste label and a label indicating its use for waste contaminated with organic compounds.

9.2.9. The larger container has a sealing cover. Open the can only for the period of time necessary to add waste to it.

9.2.10. When the plastic bag liner is full, seal it with tape and keep in the sealed container pending pickup by the Waste Management group.

9.3. Liquid waste.

9.3.1. Accumulate liquid waste containing organic compounds, such as rinses from syringes, out-of-date stock solutions, excess QC samples, and incorrectly spiked samples, in a covered metal can in a

secondary containment tray and is kept segregated from PCB-contaminated liquid waste.

9.3.2. Label the can with a hazardous waste label and a label indicating its use for waste containing organic compounds.

9.3.3. Open the can only for the period of time necessary to add waste to it.

9.3.4. When the can is full, cap it and keep it in the secondary containment trap pending pickup by the Waste Management group.

9.3.5. Label a new can for further use.

9.4. Waste pickup.

9.4.1. Request pickup by the Waste Management group of a full container or can of waste contaminated with organic compounds using the current Chemical Waste Disposal Request form. The current Waste Profile Request Form (WPRF) that describes the waste is referenced on the Chemical Waste Disposal Request.

9.4.2. The Waste Management group picks up the waste for disposal in accord with Laboratory policy.

10. Source Materials

10.1. M. A. Gautier, E. S. Gladney, N. L. Koski, E. A. Jones, and B. T. O'Malley, "Quality Assurance for Health and Environmental Chemistry: 1990," Los Alamos National Laboratory report LA-12208-MS(1991).

10.2. "Chemical, Hazardous, and Mixed Waste," Administrative Requirement 10-3, in *Environment, Safety, and Health Manual*, Los Alamos National Laboratory Manual, Chapter 1 (most recent edition).

Revisions or additions to the procedure are marked (▒). Where a section heading is marked, the entire section has been revised.

TRACE ELEMENTS ON FILTER MEDIA — QC SAMPLE PREPARATION

Analyte: Metals	**Method No.:** QCI140
Matrix: Filters	**Spike Range:** 0.01-4000 μg/filter dependent on analyte and analytical method
Procedure: ICPMS, ICPAES, ETVAA, or FAA	**Accuracy and Precision:** 100% ± 3.6% RSD
Effective Date: 01/01/84	**Authors:** Nancy L. Koski Margaret A. Gautier

SAFETY NOTE: Before beginning this procedure, read all of the Material Safety Data Sheets for the chemicals listed in Sec. 5. Read Sec. 4.3 of the EM-9 Safety Manual for information on personal protective clothing and equipment. Read Sec. 9 of this procedure and Source Material 10.9 for proper waste disposal practices.

1. Principle of Method

1.1. One or more standard solutions of single metals are spiked onto filter papers, preferably of the same type used to collect the samples.

1.2. QC samples are submitted for analysis with each analytical batch and are analyzed along with the unknown samples using the same analytical procedure.

1.3. The methods of analysis for these filters are inductively coupled plasma mass spectrometry (ICPMS), inductively coupled atomic emission spectrometry (ICPAES), flame atomic absorption (FAA) spectroscopy, or electrothermal vaporization atomic absorption (ETVAA) spectroscopy.

1.4. The QC spike range depends on the metal of interest and the method of analysis. Refer to Table I for spike ranges.

TABLE I. SPIKE RANGES FOR TRACE ELEMENTS ON FILTER MEDIA

Analyte	FAA µg/filter	ETVAA µg/filter	ICPAES µg/filter	ICPMS µg/filter
Al	10-30		40-4000	
As		0.1-1.0		
Au				0.2-1.0
Ba			10-100	
Be	1-10		10-100	
Bi				0.05-0.5
Ca	10-30		100-500	
Cd		0.01-0.1	4-400	
Co			2-50	
Cr	5-20		10-100	
Cu	5-20		6-600	0.05-2
Fe	5-20		10-100	
Li	2-10		10-100	
Mn	5-20			
Mo			10-100	
Ni	5-20		10-100	0.2-1.0
Pb	5-20	0.2-1.0	10-100	0.05-0.2
Sn		0.2-1.0		
Sr				1-5
Ta	5-15			1-5
Th				0.05-0.5
Tl		0.1-0.6	10-100	0.01-0.05
U				1-5
Zn			2-30	

2. Accuracy and Precision

2.1. The propagated error on QC preparation is based on the error of the standard and on the error associated with use of the pipette. A relative standard deviation (RSD) of 3.6% at the 1σ level has been calculated for the error of the standard and for the spiking process based on the following function:

$$D = M1 \times M2 \quad ,$$

where D = calculated result,
M1 = standard error, and
M2 = spiking error.

2.1.1. Calculate relative variance using the following equation.

$$R_M^2 = \frac{\sigma^2}{\overline{X}^2} \quad ,$$

where R^2_M = relative variance,
M = $M_1 \ldots M_n$ (variable),
σ^2 = variance (std dev^2), and
$\overline{X}$ = mean value of each variable (M).

2.1.2. Calculate percent relative standard deviation using the following equation.

$$S_{D_T} = \sqrt{R_{M1}^2 + R_{M2}^2} \times 100 \quad ,$$

where S_{D_T} = relative standard deviation (% error),
R^2_{M1} = relative variance of standard,
R^2_{M2} = relative variance of pipette, and
100 = factor to convert to percentage.

2.1.3. If two pipettes ($P_1 + P_2$) are used to add the analyte to the filter paper, use the following equation to calculate the pipetting error.

$$R_{M2} = \frac{\sqrt{\sigma_1^2 + \sigma_2^2}}{P_1 + P_2} \quad ,$$

where σ_1 = standard deviation of first pipette,
σ_2 = standard deviation of second pipette,

P_1 = mean of first pipette, and
P_2 = mean of second pipette.

Square R_{M2} and substitute this value in the equation in Step 2.1.2 to calculate the percent RSD for the use of two pipettes.

2.2. Analytical results from QC samples prepared between 1990 and 1991 using this procedure and analyzed by ICPMS, ICPAES, ETVAA, and FAA are tabulated below. The data are published in Source Materials 10.1 through 10.7.

SPIKE RECOVERY DATA FOR TRACE ELEMENTS IN FILTERS

Element	1990 mean ± SD (%)	N[a]	1991 mean ± SD (%)	N[a]
Al	98 ± 0	(2)	—	—
As	—	—	97 ± 2	(3)
Ba	122 ± 29	(7)	101 ± 0	(2)
Be	99 ± 9	(200)	102 ± 10	(170)
Ca	118 ± 25	(6)	—	—
Cd	104 ± 8	(19)	98 ± 9	(18)
Cr	101 ± 24	(30)	101 ± 8	(15)
Cu	113 ± 26	(13)	95 ± 14	(6)
Fe	127 ± 73	(23)	99 ± 5	(12)
Li	—	—	100 ± 0	(2)
Mn	97 ± 6	(6)	89 ± 0	(2)
Mo	—	—	88 ± 27	(8)
Ni	106 ± 12	(14)	98 ± 7	(12)
Pb	102 ± 14	(138)	104 ± 24	(78)
Sn	25 ± 0	(2)	—	—
Ta	—	—	62 ± 38	(5)
Th	—	—	79 ± 21	(15)
Tl	96 ± 78	(60)	220 ±380	(22)
U	104 ± 11	(51)	98 ± 15	(20)

[a]N = number of samples

3. Collection and Storage of Samples

3.1. QC samples are dried after spiking and stored in cellophane envelopes at room temperature pending analysis.

4. Apparatus

4.1. Balance: 100-g minimum capacity, 0.1-mg accuracy.

4.2. Spatula.

4.3. Platinum crucibles: approximately 50-mL capacity, with platinum covers. Each crucible should have a unique identifying number stamped or etched into it.

4.4. Desiccator.

4.5. Beaker: 50- mL, glass.

4.6. Flasks: 100- and 500-mL, volumetric, class A, glass.

4.7. Pipette: 10- mL, volumetric, class A, glass.

4.8. Graduated cylinder: 25-mL.

4.9. Filter paper: usually 1¼ -in.-diam, cellulose acetate or paper filters, such as Whatman No. 41 or 42.

4.10. Auto-pipette: 100-μL, Rainin or equivalent.

4.11. Pipette tips: disposable.

4.12. Microsyringes: 10- and 25-μL capacity, gas tight.

4.13. Envelopes: cellophane.

4.14. Filter containers: plastic.

4.15. Filter support: clean polyethylene bottle caps or beakers or similar support, slightly smaller in diameter than the filters to be spiked.

4.16. Heat lamp.

5. Reagents

5.1. Hydrochloric acid (low-temperature redistilled).

5.2. Nitric acid (low-temperature redistilled).

6. Calibration and Standards

6.1. Use spectroscopy-grade metal standards (100-10,000 μg/mL) such as those from Spex Industries, Inc., 3880 Park Avenue, Edison, NJ 08820.

6.2. If a more dilute standard is needed to reach the desired spike range, dilute a concentrated standard, taking care to match the type and concentration of acid in the dilution to those in the concentrated standard.

6.3. Solutions of the analyte of interest in the concentration range 100-10,000 μg/mL may be prepared from analytical-grade compounds for use as standards if suitable standard solutions are not readily available.

6.4. Prepare a standard for the determination of total uranium and $^{235}U/^{238}U$ isotopic ratios through ICPMS by dissolving a certified natural U_3O_8 standard, such as National Institute for Standards and Technology (NIST) Standard Reference Material (SRM) 950b, in 7.8 M HNO_3. The uranium concentration of the standard should be 1 mg/mL. The $^{235}U/^{238}U$ isotopic ratio of natural uranium is 0.0072.

6.4.1. Use low-temperature redistilled HNO_3 and double-deionized water to prepare the uranium standard solutions. Prepare 7.8 M HNO_3 by diluting 25 mL of concentrated HNO_3 to 50 mL with double-deionized water. Prepare 1.6 M HNO_3 by diluting 1 mL of concentrated HNO_3 to 10 mL with double-deionized water. Prepare 1% HNO_3 by diluting 5 mL of concentrated HNO_3 to 500 mL with double-deionized water.

6.4.2. Weigh 1 g of certified natural U_3O_8 into a platinum crucible. Cover the crucible with the platinum lid.

6.4.3. Heat the U_3O_8 in a muffle furnace at 900°C for 1 h.

6.4.4. Cool the U_3O_8 in a desiccator overnight.

6.4.5. Accurately weigh 590 ± 1 mg of the U_3O_8 into a 50-mL beaker.

6.4.6. With gentle heating, dissolve the U_3O_8 in 20 mL of 7.8 M low-temperature redistilled HNO_3.

6.4.7. Evaporate the solution to near dryness.

6.4.8. Redissolve the residue in 10 mL of 1.6 M HNO_3.

6.4.9. Quantitatively transfer the uranium solution into a 500-mL volumetric flask with 1% HNO_3 and dilute the solution to volume with 1% HNO_3.

6.4.10. Calculate the concentration of the resultant natural uranium standard as in the example in Step 8.1.

6.5. Make a uranium standard with a concentration of 100 μg/mL by diluting the 1 mg/mL uranium standard. Use double-deionized water and low-temperature redistilled HNO_3.

6.5.1. Place approximately 70 mL of double-deionized water into a 100-mL volumetric flask.

6.5.2. Add 1 mL of concentrated HNO_3 to the flask to achieve a final acid concentration of 1%.

6.5.3. Add 10 mL of the 1 mg/mL natural uranium standard to the volumetric flask using a volumetric pipette.

6.5.4. Dilute the solution to volume with double-deionized water.

6.5.5. Calculate the concentration of the resultant natural uranium standard. The $^{235}U/^{238}U$ isotopic ratio in the standard is 0.0072.

7. Procedure

7.1. Prepare QC samples to equal at least 10% of the number of samples to be analyzed. Periodically include a nonspiked filter to be used as a blank.

7.2. Select a standard solution containing the analyte of interest in a concentration such that a minimum amount of the standard will be needed to reach the desired spike range.

7.3. An auto-pipette may be used for spike volumes within the acceptable range of the auto-pipette. Microsyringes should be used for smaller spike volumes.

7.4. The volume of standard solution added to the filter at one time should never be large enough to allow contact of the solution with the filter support, which could cause loss of solution to the support. To add larger volumes of standard, it may be necessary to add the standard in more than one aliquot, allowing the filter to dry after each addition.

7.5. Place a filter paper on a bottle cap or beaker or similar so such that most of the filter is within the rim of the support.

7.6. Spike the standard solution onto the filter to reach the desired spike range.

7.7. If more than one analyte will be spiked on the filter, dry the filter after addition of each standard solution.

7.8. Dry the filters under a heat lamp or allow them to air dry.

7.9. Place the dried filters in cellophane envelopes, segregating the different analyte combinations and concentrations.

7.10. Label each envelope with a QC sample number.

7.11. Record QC standard information, sample number, sample description, spike amount, concentration, uncertainty, and all calculations in the QC Laboratory notebook and enter the information into the CVS and CVD databases on the VAX.

7.12. National Institute for Occupational Safety and Health (NIOSH) Proficiency Analytical Testing (PAT) intercomparison samples.

7.12.1. Prepare filters using the metals designated by NIOSH as being included in the current set of intercomparison samples. Follow Steps 7.5 to 7.11 of this QC sample preparation method. Refer to Table II for spike ranges.

Table II. SPIKE RANGES FOR NIOSH PAT FILTERS

Cr	5-100 μg/filter
Pb	15-100 μg/filter
Cd	5-25 μg/filter
Zn	50-200 μg/filter

7.12.2. Obtain a NIOSH-PAT filter sample from a previous intercomparison round and assign it a QC sample number as a fourth QC sample.

7.12.3. Record the sample identification, concentration, and uncertainty supplied by NIOSH for the filter in the QC Laboratory notebook and enter them into the CVS and CVD databases on the VAX.

7.12.4. Place the four QC samples into plastic filter containers or clean cellophane envelopes, label with QC sample numbers, and distribute with the NIOSH-PAT intercomparison samples.

8. Calculations

8.1. Calculate the concentration of the uranium standard solution using the following atomic weights and example.

8.1.1. The atomic weight of U is 238.029 and the atomic weight of O is 16. You may also use the molecular weight of U_3O_8 recorded on the bottle label for the NIST SRM U_3O_8.

8.1.2. The purity of the NIST U_3O_8 is recorded on the certificate for the standard reference material used.

8.1.3. If 589.6 mg of 99.968% pure U_3O_8 which has been heated in the muffle furnace is dissolved in acid and diluted to 500 mL, the uranium concentration in the standard will be 1.0 g/L.

$$\frac{\left(\frac{714.087 \text{ g U}}{842.0822 \text{ g } U_3O_8}\right)(0.99968)\,(0.5896 \text{ g})}{(500 \text{ mL})\,(1 \text{ L}/1000 \text{ mL})} = 1.0 \text{ g/L}$$

8.1.4. The $^{235}U/^{238}U$ isotopic ratio in natural uranium is 0.0072 ± 0.0007.

8.2. Record sample concentrations as mg/filter, μg/filter, or ng/filter.

8.3. Calculate the spike concentration for each metal in the QC sample as in the following example.

8.3.1. If 30 μL of a 100-μg/mL beryllium standard is spiked onto a cellulose acetate filter, the concentration of Be in the QC sample is 3 μg/filter. Multiply the result by the RSD calculated in Step 2.1 to obtain the uncertainty.

$$\frac{(100 \text{ μg/mL})\,(1 \text{ mL}/1000 \text{ μL})\,(30 \text{ μL})}{\text{filter}} = 3 \text{ μg/filter}$$

9. Proper Waste Disposal Practices

9.1. Solid Waste

9.1.1. Solid waste contaminated with hazardous chemicals above the level of concern is not generated during the routine preparation of QC samples for analysis for inorganic contaminants.

9.1.2. If a solid waste is generated that may be contaminated at a level of concern, the appropriate paperwork is completed on a case-by-case basis.

9.1.2.1. A Waste Profile Request Form (WPRF) describing the solid waste is completed and sent to the Waste Management Group for review.

9.1.2.2. If the Waste Management Group determines that the solid waste is contaminated below the level of concern, the waste is disposed of as ordinary laboratory trash.

9.1.2.3. If the Waste Management Group determines that the solid waste is contaminated above the level of concern, pickup of the contaminated waste is requested as described in Sec. 9.3.

9.2. Liquid Waste

9.2.1. Liquid waste containing hazardous contaminants, such as solutions of trace metals, is accumulated in a coated glass bottle in a secondary containment tray and kept segregated from liquid waste contaminated with organic or radioactive substances or cyanide.

9.2.2. The bottle is labeled with a hazardous waste label and a label indicating its use for trace-metal waste.

9.2.3. The bottle is opened only for the period of time necessary to add waste to it.

9.2.4. When the bottle is full, it is capped and kept in the secondary containment tray pending pickup by the Waste Management Group.

9.2.5. A new bottle is labeled for further use.

9.3. Waste Pickup

9.3.1. Pickup by the Waste Management Group of solid waste or a full bottle of liquid waste containing trace metals is requested using the current Chemical Waste Disposal Request form (CWDR). The current Waste Profile Request Form (WPRF) that describes the waste is referenced on the CWDR.

9.3.2. The Waste Management Group picks up the waste for disposal in accord with Laboratory policy.

10. Source Materials

10.1. M. A. Gautier, E. S. Gladney, and D. R. Perrin, "Quality Assurance for Health and Environmental Chemistry: 1984," Los Alamos National Laboratory report LA-10508-MS(1985).

10.2. M. A. Gautier, E. S. Gladney, and B. T. O'Malley, "Quality Assurance for Health and Environmental Chemistry: 1985," Los Alamos National Laboratory report LA-10813-MS(1986).

10.3. M. A. Gautier, E. S. Gladney, W. D. Moss, M. B. Phillips, and B. T. O'Malley, "Quality Assurance for Health and Environmental Chemistry: 1986," Los Alamos National Laboratory report LA-11114-MS(1987).

10.4. M. A. Gautier, E. S. Gladney, M. B. Phillips, and B. T. O'Malley, "Quality Assurance for Health and Environmental Chemistry: 1987," Los Alamos National Laboratory report LA-11454-MS(1988).

10.5. M. A. Gautier, E. S. Gladney, M. B. Phillips, and B. T. O'Malley, "Quality Assurance for Health and Environmental Chemistry: 1988," Los Alamos National Laboratory report LA-11637-MS(1989).

10.6. M. A. Gautier, E. S. Gladney, N. L. Koski, M. B. Phillips, E. A. Jones, and B. T. O'Malley, "Quality Assurance for Health and Environmental Chemistry: 1989," Los Alamos National Laboratory report LA-11995-MS (1990).

10.7. M. A. Gautier, E. S. Gladney, N. L. Koski, E. A. Jones, and B. T. O'Malley, "Quality Assurance for Health and Environmental Chemistry: 1990," Los Alamos National Laboratory report LA-12208-MS(1991).

10.8. National Institute of Standards and Technology, "Certificate of Analysis for Standard Reference Material 950b, Uranium Oxide (U_3O_8)" (National Institute of Standards and Technology, Washington, DC, March 1978).

10.9. "Chemical, Hazardous, and Mixed Waste," Administrative Requirement 10-3, in *Environment, Safety, and Health Manual*, Los Alamos National Laboratory Manual, Chapter 1 (most recent edition).

Revisions or additions to the procedure are marked (▒). Where a section heading is marked, the entire section has been revised.

TRACE ELEMENTS IN SOLVENT — QC SAMPLE PREPARATION

Analytes: Ag, As, Ba, Cd, Cr, Hg, Ni, Pb, Se, Tl, Zn	**Method:** QCI150
Matrix: Kerosene, xylenes, methyl isobutyl ketone, and d-limonene	**Spike Range:** 300-1300 μg/L, dependent on the analytical method (see Table I)
Procedure: Analysis by ICPMS, FAA, ETVAA, or CVAA	**Accuracy and Precision:** 100% ± 5.1% RSD
Effective Date: 04/01/87	**Authors:** Nancy Koski Margaret A. Gautier

SAFETY NOTE: Before beginning this procedure, read all of the Material Safety Data Sheets for the chemicals listed in Sec. 5. Read Sec. 4.3 of the EM-9 Safety Manual for information on personal protective clothing and equipment. Read Sec. 9 of this procedure and Source Material 10.4 for proper waste disposal practices.

1. Principle of Method

1.1. Obtain or prepare trace elements in oil standards.

1.2. Prepare working standards in base oil at approximately 100 μg/g for Ag, As, Ba, Cd, Cr, Ni, Pb, Se, Tl, and Zn, and 5 μg/g for Hg.

1.3. Spike an aliquot of each element into a polypropylene centrifuge tube. The analyst will dilute the sample to volume with the desired solvent before analysis.

1.4. The methods of analysis are inductively coupled plasma mass spectrometry (ICPMS), flame atomic absorption (FAA) spectroscopy, electrothermal vaporization atomic absorption (ETVAA) spectroscopy, or cold vapor atomic absorption (CVAA) spectrometry.

1.5. The QC spike range depends on the analytical method. Refer to Table I for the spike ranges.

TABLE I. SPIKE RANGES FOR METALS IN SOLVENT			
Element	Method	Spike range (μg/L)	Typical solvent
Ag, As, Ba, Cd, Cr, Ni, Pb, Se, Tl, Zn	ICPMS	300-800	kerosene or xylenes
Ag, As, Ba, Cd, Cr, Ni, Pb, Se, Tl, Zn	ETVAA	300-800	methyl isobutyl ketone or xylenes
Ag, As, Ba, Cd, Cr, Ni, Pb, Se, Tl, Zn	FAA	700-1300	d-limonene or xylenes
Hg	CVAA	2-4	1% nitric acid

2. Accuracy and Precision

2.1. The propagated error on QC preparation is based on the error of the standard and on the error associated with the use of the analytical balance and the volumetric flask. A relative standard deviation (RSD) of 5.1% at the 1σ level has been calculated for the error of the standard and for the weighing and dilution process based on the following function:

$$D = \frac{M_1 \times M_2}{M_3} ,$$

where D = calculated result,
M_1 = standard error,
M_2 = weighing error, and
M_3 = dilution error.

2.1.1. Calculate relative variance using the following equation.

$$R_M^2 = \frac{\sigma^2}{\overline{X}^2} ,$$

where R^2_M = relative variance,
M = $M_1 \ldots M_n$ (variable),
σ^2 = variance (std dev^2), and
$\overline{X}$ = mean value of each variable (M).

2.1.2. Calculate percent relative standard deviation using the following equation.

$$SD_T = \sqrt{R^2_{M1} + R^2_{M2} + R^2_{M3}} \times 100 \quad ,$$

where SD_T = relative standard deviation (% error),
R^2_{M1} = relative variance of standard,
R^2_{M2} = relative variance of pipette,
R^2_{M3} = relative variance of volumetric flask, and
100 = factor to convert to percentage.

2.1.3. All variables contributing to the error associated with the preparation of these QC samples were considered. The largest errors were used in the error propogation calculations.

2.2. Results of analysis by ICPMS, FAA, ETVAA, and CVAA of QC samples prepared between 1990 and 1991 using these procedures are summarized below.

SPIKE RECOVERY DATA FOR TRACE ELEMENTS IN SOLVENTS

Analyte	1990 mean ± SD (%)	N[a]	1991 mean ± SD (%)	N[a]
Ag	112 ± 22	(6)	88	(1)
As	83 ± 35	(10)	96	(1)
Ba	95 ± 9	(8)	86	(1)
Cd	98 ± 8	(9)	88	(1)
Cr	102 ± 6	(9)	—	—
Hg	103 ± 29	(11)	103	(1)
Ni	—	—	—	—
Pb	106 ± 12	(10)	76	(1)
Se	68 ± 12	(5)	106	(1)
Tl	—	—	—	—
Zn	—	—	—	—

[a]N = number of samples

3. Collection and Storage of Samples

3.1. The QC samples are prepared on the day of analysis up to the point of dilution with solvents. The dilution is performed by the analyst just before analysis because all elements are unstable at low concentrations.

4. Apparatus

4.1. Flasks: 10- and 25-mL, volumetric, class A, glass.

4.2. Centrifuge tubes: polypropylene, 50-mL, graduated, with screw caps.

4.3. Pasteur pipettes: polyethylene, disposable.

4.4. Auto-pipette: 1000-μL, Rainin or equivalent.

4.5. Pipette tips: disposable.

4.6. Bottles: 60-mL, high-density polyethylene.

4.7. Bottles: 60-mL, amber high-density polyethylene.

4.8. Analytical balance: 100-g minimum capacity, 0.1-mg accuracy.

4.9. Labels printed with QC sample numbers.

5. Reagents

5.1. Conostan 75 Base Oil or equivalent: Conostan, Inc., P.O. Box 1267, Ponca City, OK 74603.

5.2. Conostan stabilizer or equivalent: Conostan, Inc., P.O. Box 1267, Ponca City, OK 74603.

5.3. 2-ethylhexanoic acid (reagent-grade).

5.4. Mixed xylenes (reagent-grade).

5.5. Thallium (I) acetylacetonate: ROC/RIC, P.O. Box 8390, Orange, CA 92664.

6. Calibration and Standards

6.1. Obtain organometallic single-element standards in base oil in concentrations of 100 μg/g for As, Se, and Hg and 5000 μg/g for Ba, Cd, Cr, Pb, Ni, Ag, and Zn.

6.2. Prepare organometallic single-element standards with a concentration of 100 μg/L from the 5000-μg/g standards.

6.2.1. Add 500 mg of 5000-μg/g organometallic standard to a clean, tared, 60-mL high-density polyethylene bottle. Record the mass added. **DO NOT** tare the balance.

6.2.2. Add 150-200 mg of commercial stabilizer solution to achieve 0.6-0.8% by weight of stabilizer after dilution. Record the mass added. **DO NOT** tare the balance.

6.2.3. Add the manufacturer's 75 Base Oil to bring the total mass to 25.0 g. Cap and mix the standard by inversion.

6.2.4. Repeat Steps 6.2.1 to 6.2.3 for each of the remaining 5000-μg/g standards.

6.2.5. Label each bottle with information identifying the standard.

6.2.6. Prepare the silver standard in an amber polyethylene bottle or an uncolored polyethylene bottle completely wrapped in aluminum foil to protect the silver from photodegradation.

6.3. Prepare a Hg organometallic standard with a concentration of 5 μg/g from the 100-μg/g standard immediately before analysis. A new 5-μg/g standard should be prepared each time it is used because the Hg standard is unstable at low concentrations.

6.3.1. Add 250 mg of 100-μg/g Hg organometallic standard to a clean, tared 60-mL high-density polyethylene bottle. Record the mass added. **DO NOT** tare the balance.

6.3.2. Add 30-40 mg of commercial stabilizer solution to achieve 0.6-0.8% by weight of stabilizer after dilution. Record the mass added. **DO NOT** tare the balance.

6.3.3. Add the manufacturer's 75 Base Oil to bring the total mass to 5 g. Cap and mix the standard by inversion.

6.3.4. Label the bottle with information identifying the standard.

6.4. Prepare an organothallium standard at 1000 μg/mL.

6.4.1. Weigh 37 mg of thallium acetylacetonate into a 25-mL volumetric flask. Record the mass added.

6.4.2. Add 250 μL of 2-ethylhexanoic acid as a stabilizer for the thallium.

6.4.3. Dilute the solution to volume with mixed xylenes. Mix by inversion.

6.5. Prepare a 100-μg/mL organothallium standard.

6.5.1. Pipet 1 mL of 1000-μg/mL thallium acetylacetonate standard into a 10-mL volumetric flask.

6.5.2. Dilute the standard to volume with mixed xylenes. Mix by inversion.

6.6. Check the concentration of the 100-μg/g As, Se, and Hg Conostan standards periodically. Discard and replace a standard when degradation is noted.

6.7. Conostan states that its 5000-μg/g standards are stable for more than 10 years.

7. Procedure

7.1. Prepare QC samples to equal at least 10% of the total number of samples to be analyzed on the day requested by the analyst because all of the metals are relatively unstable at the low concentrations made for QCs. Periodically omit one or more of the metal analytes from the QC sample as a blank for that metal.

7.2. Determine which analysis method will be used. Select the spike range for the method from Table I.

7.3. Preparation of QC samples containing all metals except mercury.

7.3.1. Add most standards gravimetrically. Weigh an aliquot of a 100-μg/g standard into a 50-mL graduated polypropylene centrifuge tube to reach the desired spike range determined from Table I.

7.3.2. Record the element and mass added.

7.3.3. Retare the balance.

7.3.4. Repeat Steps 7.3.1 to 7.3.3 for each desired element except thallium.

7.3.5. Add the thallium standard volumetrically. Using an automatic pipette, add an aliquot of 100-μg/mL thallium standard to reach the desired spike range determined from Table I.

7.3.6. Screw the cap onto the centrifuge tube and submit the QC sample for analysis.

7.4. Preparation of a mercury QC sample.

NOTE: A new 5-μg/g Hg standard should be prepared each time it is used because the Hg standard is unstable at low concentrations.

7.4.1. Weigh an aliquot of the 5-μg/g Hg standard into a 50-mL graduated polypropylene centifuge tube to reach the desired spike range determined from Table I.

7.4.2. Record the element and mass added.

7.4.3. Screw the cap onto the centrifuge tube and submit the QC sample for analysis.

7.5. Just before analysis the analyst will dilute the Hg QC sample to 25.0 mL and all other metal QC samples to 50.0 mL with the solvent of choice for the analysis method. Refer to Table I for typical solvents.

7.6. Record QC standard information, sample number, sample description, spike amount, concentration, uncertainty, and all calculations in the QC Laboratory notebook and in the CVS and CVD data bases on the VAX.

8. Calculations

8.1. Record sample concentrations as μg/L or mg/L.

8.2. Calculate spike concentrations after final dilution by the analyst as in the following example.

8.2.1. If 0.2672 g of 100 μg/g As standard is diluted to 50 mL with xylenes the concentration of As in the sample is 534 μg/L. Multiply the result by the RSD calculated in Step 2.1 to obtain the uncertainty.

$$\frac{(0.2672\ \text{g})\ (100\ \mu\text{g/g})}{(50\ \text{mL})\ (1\ \text{L}/1000\ \text{mL})} = 534\ \mu\text{g/L}$$

9. Proper Waste Disposal Practices

9.1. Solid Waste

9.1.1. Solid waste contaminated with hazardous chemicals above the level of concern is not generated during the routine preparation of QC samples for analysis for inorganic contaminants.

9.1.2. If a solid waste is generated that may be contaminated at a level of concern, the appropriate paperwork is completed on a case-by-case basis.

9.1.2.1. A Waste Profile Request Form (WPRF) describing the solid waste is completed and sent to the Waste Management Group for review.

9.1.2.2. If the Waste Management Group determines that the solid waste is contaminated below the level of concern, the waste is disposed of as ordinary laboratory trash.

9.1.2.3. If the Waste Management Group determines that the solid waste is contaminated above the level of concern, pickup of the contaminated waste is requested as described in Sec. 9.3.

9.2. Liquid Waste

9.2.1. Liquid waste containing hazardous contaminants, such as solutions of trace metals, is accumulated in a coated glass bottle in a secondary containment tray and kept segregated from liquid waste contaminated with organic or radioactive substances or cyanide.

9.2.2. The bottle is labeled with a hazardous waste label and a label indicating its use for trace-metal waste.

9.2.3. The bottle is opened only for the period of time necessary to add waste to it.

9.2.4. When the bottle is full, it is capped and kept in the secondary containment tray pending pickup by the Waste Management Group.

9.2.5. A new bottle is labeled for further use.

9.3. Waste Pickup

9.3.1. Pickup by the Waste Management Group of solid waste or a full bottle of liquid waste containing trace metals is requested using the current Chemical Waste Disposal Request form (CWDR). The current Waste Profile Request Form (WPRF) that describes the waste is referenced on the CWDR.

9.3.2. The Waste Management Group picks up the waste for disposal in accord with Laboratory policy.

10. Source Materials

10.1. M. A. Gautier, E. S. Gladney, M. B. Phillips, and B. T. O'Malley, "Quality Assurance for Health and Environmental Chemistry: 1988," Los Alamos National Laboratory report LA-11637-MS (1989).

10.2. M. A. Gautier, E. S. Gladney, N. L. Koski, M. B. Phillips, E. A. Jones, and B. T. O'Malley, "Quality Assurance for Health and Environmental Chemistry: 1989," Los Alamos National Laboratory report LA-11995-MS (1990).

10.3. M. A. Gautier, E. S. Gladney, N. L. Koski, E. A. Jones, and B. T. O'Malley, "Quality Assurance for Health and Environmental Chemistry: 1990," Los Alamos National Laboratory report LA-12208-MS (1991).

10.4. "Chemical, Hazardous, and Mixed Waste," Administrative Requirement 10-3, in *Environment, Safety, and Health Manual*, Los Alamos National Laboratory Manual, Chapter 1 (most recent edition).

Revisions or additions to the procedure are marked (▒▒▒▒). Where a section heading is marked, the entire section has been revised

TRACE ELEMENTS IN NITRIC ACID — QC SAMPLE PREPARATION

Analyte: Metals	**Method No.:** QCI170
Matrix: Water, soil	**Accuracy and Precision:** 100% ± 4.3% RSD
Procedure: ICPMS, ICPAES, FAA, ETVAA, or CVAA, depending on metal and concentration range	**Spike Range:** 1 μg/L-90 mg/L
Effective Date: 04/01/88	**Authors:** Nancy L. Koski Margaret A. Gautier

SAFETY NOTE: Before beginning this procedure, read all of the Material Safety Data Sheets for the chemicals listed in Section 5. Read Section 4.3 of the EM-9 Safety Manual for information on personal protective clothing and equipment. Read Sec. 9 of this procedure and Source Material 10.5 for proper waste disposal practices.

1. Principle of Method

1.1. Acidified water is spiked with standard solutions of metals.

1.2. An acidified water QC sample represents the solution resulting from the extraction of the metals from a soil matrix and is analyzed from that point using the same analytical procedure applied to the unknown samples.

1.3. QC samples are submitted for analysis with each analytical batch and are analyzed using the same analytical procedure or applicable sections of the procedure.

1.4. Methods of analysis depend on the metal and its concentration. They include inductively coupled plasma mass spectrometry (ICPMS), inductively coupled plasma atomic emission spectrometry (ICPAES), flame atomic absorption (FAA) spectroscopy, electrothermal vaporization atomic absorption (ETVAA) spectroscopy, and cold vapor atomic absorption (CVAA) spectroscopy.

1.5. The QC spike range depends on the metal of interest and the method of analysis. Refer to the following table for spike ranges.

SPIKE RANGES FOR TRACE ELEMENTS IN NITRIC ACID					
Analyte	ICPMS mg/L	ICPES mg/L	FAA mg/L	ETVAA mg/L	CVAA mg/L
Ag	0.005-0.05	0.3-6	0.25-1.0		
Al	0.1-0.5	1-20	5-10		
As	0.005-0.05	1.5-30		0.01-0.06	
Au		0.2-5			
B	0.01-0.09	0.2-5	0.1-6	0.1-6.0	
Ba	0.005-0.05	0.2-5	2.0-8.0		
Be	0.005-0.05	0.2-5	0.5-1.5	0.01-0.04	
Ca		0.6-13	5-10		
Cd	0.005-0.05	0.2-3	0.5-1.5	0.001-0.005	
Ce		1.5-30			
Co	0.025-0.05	0.2-5	0.5-1.5		
Cr	0.005-0.05	0.3-6	0.5-1.5	0.01-0.06	
Cu	0.005-0.2	0.2-3	0.5-1.5		
Fe	0.1-0.25	0.2-3	0.5-1.5	0.01-0.04	
Hg					0.001-0.004
K		9-90	1-5		
Li	0.05-0.2	0.2-3	0.2-1		
Mg		2-30	1-5		
Mn	0.005-0.05	0.05-1	0.5-1.5		
Mo	0.005-0.05	0.2-5	3-8		
Na		1-20	3-7.5		
Ni	0.03-0.1	0.4-7	0.5-1.5		

SPIKE RANGES FOR TRACE ELEMENTS IN NITRIC ACID (cont)					
Analyte	ICPMS mg/L	ICPES mg/L	FAA mg/L	ETVAA mg/L	CVAA mg/L
Pb	0.005-0.02	2-30	0.5-1.5	0.01-0.06	
Re		5-30			
S		6-60			
Sb	0.005-0.05	2-30	0.5-1.5	0.01-0.05	
Sc		0.05-1			
Se	0.05-0.1	2-30		0.01-0.06	
Si		0.5-10			
Sn		2-30	0.1-1	0.01-0.06	
Sr	0.1-0.5	0.02-0.5			
Ta	0.1-0.5	0.1-2.0	0.5-1.5		
Th	0.005-0.05				
Tl	0.005-0.02	2-30	0.5-1.5	0.01-0.06	
U	0.005-0.05				
U-235/238	0.05-0.1				
V	0.03-0.1	0.2-5		0.01-0.06	
Y		0.05-1			
Zn	0.01-0.2	0.2-3	0.5-1.5		

2. Accuracy and Precision

2.1. The propagated error on QC preparation is based on the error of the standard and the error associated with the use of the pipette and the volumetric flask. A relative standard deviation (RSD) of 4.3% at the 1σ level has been calculated for the spiking and dilution process based on the following functions.

2.1.1. One dilution of the standard.

2.1.1.1. Use the following function for standards requiring a single dilution.

$$U = \frac{M_1 \times M_2}{M_3} ,$$

where U = uncertainty,
M_1 = standard error,
M_2 = spiking error, and
M_3 = dilution error.

2.1.1.2. Calculate relative variance for each variable using the following equation:

$$R_M^2 = \frac{\sigma^2}{\overline{X}^2} ,$$

where $R^2{}_M$ = relative variance,
M = $M_1 \ldots M_n$ (variable),
σ^2 = variance (std dev^2), and
$\overline{X}$ = mean value of each variable (M).

2.1.1.3. Calculate percent relative standard deviation using the following equation:

$$S_{D_T} = \sqrt{R_{M1}^2 + R_{M2}^2 + R_{M3}^2} \times 100 ,$$

where SD_T = relative standard deviation (% error),
$R^2{}_{M1}$ = relative variance of standard,
$R^2{}_{M2}$ = relative variance of pipette,
$R^2{}_{M3}$ = relative variance of volumetric flask, and
100 = factor to convert to percentage.

2.1.2. Two dilutions of the standard.

2.1.2.1. Use the following function for standards requiring a second dilution.

$$U = \frac{M_1 \times M_2}{M_3} \times \frac{M_4}{M_5} ,$$

where U = uncertainty of standard,
M_1 = standard error,
M_2 = first spiking error,
M_3 = first dilution error,
M_4 = second spiking error, and
M_5 = second dilution error.

2.1.2.2. Calculate relative variance for each variable using the following equation:

$$R_M^2 = \frac{\sigma^2}{\overline{X}^2} ,$$

where $R^2{}_M$ = relative variance,
M = $M_1 \ldots M_n$ (variable),
σ^2 = variance (std dev^2), and
$\overline{X}$ = mean value of each variable (M).

2.1.2.3. Calculate relative standard deviation using the following equation:

$$S_{D_T} = \sqrt{R_{M1}^2 + R_{M2}^2 + R_{M3}^2 + R_{M4}^2 + R_{M5}^2} \times 100 ,$$

where SD_T = relative standard deviation (% error),
$R^2{}_{M1}$ = relative variance of standard,
$R^2{}_{M2}$ = relative variance of first pipette,
$R^2{}_{M3}$ = relative variance of first volumetric flask,
$R^2{}_{M4}$ = relative variance of second pipette,
$R^2{}_{M5}$ = relative variance of second volumetric flask, and
100 = factor to convert to percentage.

2.2. All variables contributing to the error associated with the preparation of these QC samples were considered. The largest errors were used in the error propagation calculations.

2.3. Analytical results from QC samples prepared between 1990 and 1991 using this procedure and analyzed by ICPMS, ICPAES, FAA, ETVAA, or CVAA are tabulated below. The data are published in Source Materials 10.1 through 10.3.

SPIKE RECOVERY DATA FOR TRACE ELEMENTS IN NITRIC ACID

Analyte	1990 Mean ± SD (%)	N[a]	1991 Mean ± SD (%)	N[a]
Ag	99 ± 15	(65)	99 ± 9	(167)
Al	109 ± 26	(126)	104 ± 16	(42)
As	97 ± 18	(67)	102 ± 10	(119)
Au	84 ± 0	(1)	218 ± 0	(1)
B	98 ± 16	(77)	102 ± 5	(30)
Ba	105 ± 16	(73)	101 ± 12	(159)
Be	102 ± 18	(102)	96 ± 13	(82)
Ca	114 ± 16	(14)	113 ± 9	(14)
Cd	99 ± 8	(72)	102 ± 9	(171)
Ce	—	—	—	—
Co	109 ± 37	(39)	106 ± 8	(37)
Cr	104 ± 13	(60)	102 ± 7	(179)
Cu	107 ± 36	(95)	101 ± 7	(82)
Fe	101 ± 40	(40)	103 ± 7	(54)
Hg	99 ± 13	(167)	98 ± 12	(83)
K	99 ± 7	(13)	102 ± 7	(14)
Li	99 ± 11	(10)	130 ± 8	(5)
Mg	103 ± 6	(31)	105 ± 7	(19)
Mn	106 ± 29	(60)	104 ± 22	(37)
Mo	101 ± 18	(61)	103 ± 10	(34)
Na	107 ± 10	(21)	109 ± 15	(23)
Ni	104 ± 26	(128)	101 ± 10	(88)
Pb	105 ± 32	(70)	102 ± 7	(199)
Re	—	—	—	—
S	115 ± 13	(15)	113 ± 14	(16)
Sb	101 ± 16	(111)	98 ± 10	(49)
Sc	—	—	—	—
Se	100 ± 8	(74)	100 ± 10	(134)
Si	100 ± 4	(71)	100 ± 4	(48)
Sr	98 ± 5	(61)	100 ± 9	(12)
Ta	—	—	—	—
Th	—	—	104 ± 9	(21)
Tl	105 ± 23	(100)	102 ± 9	(59)
U	98 ± 11	(262)	100 ± 11	(160)
U-235/238	100 ± 6	(119)	100 ± 5	(85)
V	102 ± 20	(40)	103 ± 11	(25)
Y	—	—	—	—
Zn	104 ± 39	(79)	103 ± 11	(57)

[a]N = number of samples.

3. Collection and Storage of Samples

3.1. Mercury standard samples must be stored in glass containers with $Cr_2O_7^=$ added as a stabilizer. Refer to QC Method No. QCI200 for the preparation and storage of Hg standard samples.

3.2. If the QC sample contains Ag, it must be protected from light to prevent reduction and subsequent loss of Ag. Store the sample at room temperature in an amber high-density polyethylene bottle or in an uncolored high-density polyethylene bottle completely wrapped in aluminum foil.

3.3. If any of the metal standard solutions contains HCl, it may not be added to a solution containing Ag because the Ag will be lost as insoluble AgCl.

3.4. QC samples are prepared in a volumetric flask and are aliquoted into high-density polyethylene bottles for storage at room temperature pending analysis.

4. Apparatus

4.1. Balance: 100-g minimum capacity, 0.1-mg accuracy.

4.2. Spatula.

4.3. Platinum crucibles: approximately 50-mL capacity, with platinum covers. Each crucible should have a unique identifying number stamped or etched into it.

4.4. Desiccator.

4.5. Beaker: 50-mL, glass.

4.6. Volumetric flasks: 10-, 50-, 100-, and 500-mL, class A, glass.

4.7. Graduated cylinders: 10- and 25-mL.

4.8. Auto-pipette: 100- and 1000-μL, Rainin or equivalent.

4.9. Pipette tips: disposable.

4.10. Volumetric pipettes: 2-, 3-, 4-, 5-, 6-, 7-, 8-, 9-, and 10-mL, class A, glass.

4.11 Bottles: 125- and 250-mL, high-density polyethylene.

4.12. Aluminum foil.

4.13. Bottles: 125-mL, amber, high-density polyethylene.

4.14. Labels printed with QC sample numbers.

5. Reagents

5.1. Nitric acid (16 M, low-temperature redistilled).

5.2. Water. Double-deionized, 10-MΩ/cm or greater resistivity, specified in document ASTM-D1193 as ASTM Type I water and referred to in this procedure as double-deionized water.

5.3. Potassium dichromate (reagent-grade).

6. Calibration and Standards

6.1. Spectroscopy-grade metal standards (100-10,000 μg/mL). Spex Industries, Inc., 3880 Park Avenue, Edison, NJ 08820, or equivalent.

6.2. If a more dilute standard is needed to reach the desired spike range, dilute a concentrated standard, taking care to match the kind and concentration of acid in the dilution to those in the concentrated standard.

6.3. Prepare a standard for the determination of Cr in the 6+ oxidation state by dissolving reagent-grade $K_2Cr_2O_7$ in double-deionized water. The Cr^{6+} concentration of the standard should be 1000 μg/mL.

6.3.1. Tare a 50-mL volumetric flask on the balance.

6.3.2. Accurately weigh 141.5 ± 0.2 mg of analytical-grade $K_2Cr_2O_7$ into the flask.

6.3.3. Dissolve the salt and dilute the standard to volume with double-deionized water.

6.3.4. Calculate the Cr^{6+} concentration of the standard as in the example in Step 8.1.

6.4. Prepare a standard for the determination of total uranium and $^{235}U/^{238}U$ isotopic ratios through ICPMS by dissolving a certified natural U_3O_8 standard, such as National Institute for Standards and Technology (NIST) Standard Reference Material (SRM) 950b, in 7.8 M HNO_3. The uranium concentration of the standard should be 1 mg/mL. The $^{235}U/^{238}U$ isotopic ratio of natural uranium is 0.0072.

6.4.1. Use low-temperature redistilled HNO_3 and double-deionized water to prepare the uranium standard solutions. Prepare 7.8 M HNO_3 by diluting 25 mL of concentrated HNO_3 to 50 mL with double-deionized water. Prepare 1.6 M HNO_3 by diluting 1 mL of concentrated HNO_3 to 10 mL with double-deionized water. Prepare 1% HNO_3 by diluting 5 mL of concentrated HNO_3 to 500 mL with double-deionized water.

6.4.2. Weigh 1 g of a certified natural U_3O_8 into a platinum crucible. Cover the crucible with the platinum lid.

6.4.3. Heat the U_3O_8 in a muffle furnace at 900°C for 1 h.

6.4.4. Cool the U_3O_8 in a desiccator overnight.

6.4.5. Accurately weigh 590 ± 1 mg of the U_3O_8 into a 50-mL beaker.

6.4.6. With gentle heating, dissolve the U_3O_8 in 20 mL of 7.8 M low-temperature redistilled HNO_3.

6.4.7. Evaporate the solution to near dryness.

6.4.8. Redissolve the residue in 10 mL of 1.6 M HNO_3.

6.4.9. Quantitatively transfer the uranium solution into a 500-mL volumetric flask with 1% HNO_3 and dilute the solution to volume with 1% HNO_3.

6.4.10. Calculate the concentration of the resultant natural uranium standard as in the example in Step 8.2.

6.5. Prepare a uranium standard with a concentration of 100 μg/mL by diluting the 1-mg/mL uranium standard. Use double-deionized water and low-temperature redistilled HNO_3.

6.5.1. Place approximately 70 mL of double-deionized water into a 100-mL volumetric flask.

6.5.2. Add 1 mL of concentrated HNO_3 to the flask to achieve a final acid concentration of 1%.

6.5.3. Add 10 mL of the 1-mg/mL natural uranium standard to the volumetric flask using a volumetric pipette.

6.5.4. Dilute the solution to volume with double-deionized water.

6.5.5. Calculate the concentration of the resultant natural uranium standard. The $^{235}U/^{238}U$ isotopic ratio in the standard is 0.0072.

7. Procedure

7.1. Prepare QC samples to equal at least 10% of the number of samples to be analyzed. Periodically omit one or more metals from the acidified standard as a blank QC for those metals.

7.2. This procedure describes the preparation of five 100-mL aliquots of multielement standard, five 100-mL aliquots of silver standard, and two 250-mL aliquots of natural uranium standard. QC samples may be prepared in larger or smaller quantities than described in this procedure, adjusting apparatus size as necessary.

7.3. Place approximately 400 mL of double-deionized water in a 500-mL volumetric flask.

7.4. Add 15 mL of 16 M low-temperature redistilled nitric acid to the water to produce a final acid concentration of 3% by volume.

7.5. Use a new disposable pipette tip to spike each metal standard solution into the QC sample to avoid contamination of the standards. Spike an aliquot of each metal standard solution into the acidified water in the flask to reach the desired spike range for that metal.

NOTE: If any of the metal standard solutions used to prepare the QC sample contains HCl, do not include Ag in the sample because it will be lost as insoluble AgCl. Prepare a separate QC sample for Ag.

7.6. Dilute the QC sample to volume with double-deionized water. Mix by inversion.

7.7. Divide the QC sample evenly among five 125-mL high-density polyethylene bottles. If Ag has been included in the sample, use amber 125-mL high-density polyethylene bottles or uncolored bottles completely wrapped in aluminum foil.

7.8. Label each bottle with a QC sample number and store at room temperature pending analysis. The same QC number may be used for all aliquots of a QC sample from the same 500-mL volumetric flask.

7.9. Preparing a separate Ag QC sample.

7.9.1. Place approximately 400 mL of double-deionized water into a 500-mL volumetric flask.

7.9.2. Add 15 mL of 16 M low-temperature redistilled nitric acid to produce a final acid concentration of 3% by volume.

7.9.3. Spike an aliquot of Ag standard solution into the acidified water in the flask to reach the desired spike range.

7.9.4. Dilute the QC sample to volume with double-deionized water. Mix by inversion.

7.9.5. Divide the QC sample evenly between five 100-mL, amber, high-density polyethylene bottles or five 100-mL, uncolored, high-density polyethylene bottles. The uncolored bottles must be completely wrapped in aluminum foil to prevent loss of Ag.

7.9.6. Label each bottle with a QC sample number and store at room temperature pending analysis. The same QC number may be used for all aliquots of a QC sample from the same 500-mL volumetric flask.

7.10. For the determination of total uranium and $^{235}U/^{238}U$ isotopic ratios through ICPMS, prepare a QC sample from the natural uranium standard made from a certified natural U_3O_8 material.

7.10.1. Place approximately 400 mL of double-deionized water into a 500-mL volumetric flask.

7.10.2. Add 15 mL of low-temperature redistilled nitric acid to produce a final acid concentration of 3% by volume.

7.10.3. Spike an aliquot of 100-μg/mL natural uranium standard into the acidified water in the flask to reach the desired spike range for total uranium.

7.10.4. Dilute the QC sample to volume with double-deionized water. Mix by inversion.

7.10.5. Divide the QC sample evenly between two 250-mL high-density polyethylene bottles.

7.10.6. Label each bottle with a QC number and store at room temperature pending analysis. The same QC number may be used for both aliquots of a QC sample from the same 500-mL volumetric flask.

7.11. Record QC standard information, sample number, sample description, spike amount, concentration, isotopic ratio, uncertainty, and all calculations in the QC Laboratory notebook and enter them into the CVS and CVD data bases on the VAX.

8. Calculations

8.1. Calculate the concentration of the Cr^{6+} standard solution using the following atomic weights and example.

8.1.1. Atomic weight of K = 39.1
Atomic weight of Cr = 52.0
Atomic weight of O = 16.0

8.1.2. If 141.5 mg of $K_2Cr_2O_7$ is dissolved in 50 mL of double-deoionized water, the Cr^{6+} concentration in the standard is 1000 μg/mL.

$$\frac{\left(\frac{104\ g\ Cr^{6+}}{294.2\ g\ K_2Cr_2O_7}\right)(141.5\ mg\ K_2Cr_2O_7)\left(\frac{1000\ \mu g}{1\ mg}\right)}{50\ mL} = 1000\ \mu g\ \frac{Cr^{6+}}{mL}$$

8.2. Calculate the concentration of the uranium standard solution using the following atomic weights and example.

8.2.1. Atomic weight of U = 238.029
Atomic weight of O = 16
You may also use the molecular weight of U_3O_8 recorded on the bottle label for NIST SRM U_3O_8.

8.2.2. The purity of the NIST U_8O_8 is recorded on the certificate for the standard reference material used.

8.2.3. If 589.6 mg of 99.968% pure U_3O_8, which has been heated in the muffle furnace, is dissolved in acid and diluted to 500 mL, the uranium concentration in the standard will be 1.0 g/L.

$$\frac{\left(\frac{714.087\ g\ U}{842.0822\ g\ U_3O_8}\right)(0.99968)\ (0.5896\ g)}{(500\ mL)\ (1\ L/1000\ mL)} = 1.0\ g/L$$

8.2.4. The $^{235}U/^{238}U$ isotopic ratio in natural uranium is 0.0072 ± 0.0007.

8.3. Record the concentration of each metal in the QC sample as μg/L or mg/L.

8.4. Calculate spike concentrations for each metal in the QC sample as in the following example:

8.4.1. If 250 μL of a 100-μg/mL Se standard is used to spike 400 mL of acidified water and the solution is diluted to 500 mL, the concentration of Se in the sample is 50 μg/L. Multiply the result by the RSD calculated in Step 2.1 to obtain the uncertainty.

$$\frac{(100\ \mu g/mL)\left(\frac{1\ mL}{1000\ \mu L}\right)(250\ \mu L)}{(500\ mL)\ (1\ L/1000\ mL)} = 50\ \mu g/L$$

8.4.2. If 450 μL of 1000-μg/mL Ag standard is used to spike 400 mL of acidified water and the solution is diluted to 500 mL, the concentration of Ag in the sample is 900 μg/L. Multiply the result by the RSD calculated in Step 2.1 to obtain the uncertainty.

$$\frac{(1000\ \mu g/mL)\left(\frac{1\ mL}{1000\ \mu L}\right)(450\ \mu L)}{(500\ mL)\ (1\ L/1000\ mL)} = 900\ \mu g/L$$

8.4.3. If 400 μL of 100-μg/mL natural uranium standard is used to spike 400 mL of acidified water and the solution is diluted to 500 mL, the concentration of U in the sample is 80 μg/L. Multiply the result by the RSD calculated in Step 2.1 to obtain the uncertainty.

$$\frac{(100\ \mu g/mL)\left(\frac{1\ mL}{1000\ \mu L}\right)(400\mu L)}{(500\ mL)\ (1\ L/1000\ mL)} = 80\ \mu g/L$$

The $^{235}U/^{238}U$ isotopic ratio in natural uranium is 0.0072 ± 0.0007.

9. Proper Waste Disposal Practices

9.1. Solid Waste

9.1.1. Solid waste contaminated with hazardous chemicals above the level of concern is not generated during the routine preparation of QC samples for analysis for inorganic contaminants.

9.1.2. If a solid waste is generated that may be contaminated at a level of concern, the appropriate paperwork is completed on a case-by-case basis.

9.1.2.1. A Waste Profile Request Form (WPRF) describing the solid waste is completed and sent to the Waste Management group for review.

9.1.2.2. If the Waste Management group determines that the solid waste is contaminated below the level of concern, the waste is disposed of as ordinary laboratory trash.

9.1.2.3. If the Waste Management group determines that the solid waste is contaminated above the level of concern, pickup of the contaminated waste is requested as described in Sec. 9.3.

9.2. Liquid Waste

9.2.1. Liquid waste containing hazardous contaminants, such as solutions of trace metals, is accumulated in a coated glass bottle in a secondary containment tray and is kept segregated from liquid waste contaminated with organic or radioactive substances or cyanide.

9.2.2. The bottle is labeled with a hazardous waste label and a label indicating its use for trace-metal waste.

9.2.3. The bottle is opened only for the period of time necessary to add waste to it.

9.2.4. When the bottle is full, it is capped and kept in the secondary containment tray pending pickup by the Waste Management Group.

9.2.5. A new bottle is labeled for further use.

9.3. Waste Pickup

9.3.1. Pickup by the Waste Management Group of solid waste or a full bottle of liquid waste containing trace metals is requested using the current Chemical Waste Disposal Request form (CWDR). The current Waste Profile Request Form (WPRF) that describes the waste is referenced on the CWDR.

9.3.2. The Waste Management Group picks up the waste for disposal in accord with Laboratory policy.

10. Source Materials

10.1. M. A. Gautier, E. S. Gladney, M. B. Phillips, and B. T. O'Malley, "Quality Assurance for Health and Environmental Chemistry: 1988," Los Alamos National Laboratory report LA-11637-MS (1989).

10.2. M. A. Gautier, E. S. Gladney, N. L. Koski, M. B. Phillips, E. A. Jones, and B. T. O'Malley, "Quality Assurance for Health and Environmental Chemistry: 1989," Los Alamos National Laboratory report LA-11995-MS (1990).

10.3. M. A. Gautier, E. S. Gladney, N. L. Koski, E. A. Jones, and B. T. O'Malley, "Quality Assurance for Health and Environmental Chemistry: 1990," Los Alamos National Laboratory report LA-12208-MS (1991).

10.4. National Institute of Standards and Technology, "Certificate of Analysis for Standard Reference Material 950b, Uranium Oxide (U_3O_8)" (National Institute of Standards and Technology, Washington, DC, March 1978).

10.5. "Chemical, Hazardous, and Mixed Waste," Administrative Requirement 10-3, in *Environment, Safety, and Health Manual*, Los Alamos National Laboratory Manual, Chapter 1 (most recent edition).

Revisions or additions to the procedure are marked (▒▒▒▒). Where a section heading is marked, the entire section has been revised.

TRACE ELEMENTS IN HYDROCHLORIC ACID — QC SAMPLE PREPARATION

Analyte: Metals	**Method No.:** QCI180
Matrix: Water, soil	**Spike Range:** Dependent on element and analytical method (see Step 1.5)
Procedure: ICPAES, FAA, or ETVAA, depending on metal and concentration range	**Accuracy and Precision:** 100% ± 5% RSD
Effective Date: 01/17/91	**Authors:** Nancy L. Koski Margaret A. Gautier

SAFETY NOTE: Before beginning this procedure, read all of the Material Safety Data Sheets for the chemicals listed in Sec. 5. Read Sec. 4.3 of the EM-9 Safety Manual for information on personal protective clothing and equipment. Read Sec. 9 of this procedure and Source Material 10.4 for proper waste disposal practices.

1. Principle of Method

1.1. Acidified water is spiked with standard solutions of metals. Tin and titanium are more stable in hydrochloric acid than in nitric acid.

1.2. The acidified water QC sample represents the solution resulting from the extraction of the metals from a soil matrix.

1.3. QC samples are submitted for analysis with each analytical batch and are analyzed from the extraction step in the same analytical procedure used for unknown samples.

1.4. The method of analysis depends on the metal and its concentration. The methods include inductively coupled plasma atomic emission spectrometry (ICPAES), flame atomic absorption (FAA) spectroscopy, and electrothermal vaporization atomic absorption (ETVAA) spectroscopy. QC samples of trace elements in hydrochloric acid are not run by inductively coupled plasma mass spectrometry (ICPMS) because the hydrochloric acid interferes.

1.5. The QC spike range depends on the metal of interest and on the method of analysis. Refer to the following table for spike ranges.

SPIKE RANGES FOR TRACE ELEMENTS IN HYDROCHLORIC ACID			
Element	ICPAES (mg/L)	FAA (mg/L)	ETVAA (mg/L)
Sn	2-30	0.1-1	0.010-0.060
Ti	0.1-2	2-5	0.005-0.050

2. Accuracy and Precision

2.1. The propagated error on QC preparation is based on the error of the standard and on the error associated with the use of the pipette and of the volumetric flask. A relative standard deviation (RSD) of 5.0% at the 1σ level has been calculated for standard preparation and for the spiking and dilution process based on the following function:

$$D = \frac{M1 \times M2}{M3} ,$$

where D = calculated result,
M1 = standard error,
M2 = spiking error, and
M3 = dilution error.

2.1.1. Calculate relative variance for each variable using the following equation.

$$R_M^2 = \frac{\sigma^2}{\overline{X}^2} ,$$

where R^2_M = relative variance,
M = $M_1 \ldots M_n$ (variable),
σ^2 = variance (std dev^2), and
$\overline{X}$ = mean value of each variable (M).

2.1.2. Calculate percent relative standard deviation using the following equation.

$$S_{D_T} = \sqrt{R^2_{M1} + R^2_{M2} + R^2_{M3}} \times 100 \quad ,$$

where SD_T = relative standard deviation (% error),
R^2_{M1} = relative variance of standard,
R^2_{M2} = relative variance of pipette,
R^2_{M3} = relative variance of volumetric flask, and
100 = factor to convert to percentage.

2.1.3. All variables contributing to the error associated with the preparation of these QC samples were considered. The largest errors were used in the error propagation calculations.

2.2. Analytical results from QC samples prepared between 1990 and 1991 using this procedure and analyzed by ICPAES, FAA, and ETVAA are tabulated below. The data are published in Source Materials 10.1 through 10.3.

SPIKE RECOVERY DATA FOR TRACE ELEMENTS IN HCL

Analyte	1990 Mean ± SD (%)	N[a]	1991 Mean ± SD (%)	N[a]
Sn	104 ± 7	(8)	91 ± 11	(13)
Ti	109 ± 34	(45)	105 ± 17	(22)

[a]N = number of samples.

3. Collection and Storage of Samples

3.1. QC samples are prepared in a volumetric flask and are aliquoted into high-density polyethylene bottles for storage at room temperature pending analysis.

4. Apparatus

4.1. Flasks: 200-mL, glass, class A volumetric.

4.2. Graduated cylinder: 100-mL.

4.3. Auto-pipette: 100- and 1000-µL, Rainin or equivalent.

4.4. Pipette tips: disposable.

4.5. Pipettes: 2-, 3-, 4-, 5-, and 6-mL, glass, class A volumetric.

4.6. Bottles: 125-mL, high-density polyethylene.

4.7. Labels printed with QC sample numbers.

5. Reagents

5.1. Hydrochloric acid, 12 M, ultrapure, suitable for trace-metal analysis.

5.2. Water. Double-deionized, >10 MΩ/cm resistivity, specified in document ASTM-D1193 as ASTM Type I water and referred to in this procedure as double-deionized water.

6. Calibration and Standards

6.1. Spectroscopy-grade metal standards (100-10,000 µg/mL). Spex Industries, Inc., 3880 Park Avenue, Edison, NJ 08820, or equivalent.

6.2. If a more dilute standard is needed to reach the desired spike range, dilute a concentrated standard, taking care to match the type and concentration of acid in the dilution to those in the concentrated standard.

7. Procedure

7.1. Prepare QC samples to equal at least 10% of the number of samples to be analyzed. Periodically omit one or more metals from the acidified sample as a blank QC for those metals.

7.2. This procedure describes the preparation of two 100-mL aliquots of a QC sample. QC samples may be prepared in larger or smaller quantities than described in this procedure, adjusting apparatus size and reagent volume as necessary.

7.3. Place approximately 100 mL of double-deionized water into a 200-mL volumetric flask.

7.4. Add 40 mL of ultrapure hydrochloric acid to the water in the flask.

7.5. Use a new disposable pipette tip to spike each metal standard solution into the QC sample to avoid contamination of the standards. Spike an aliquot of each metal standard solution into the acidified water in the flask to reach the desired spike range for that metal.

7.6. Dilute the QC sample to volume with double-deionized water. Mix by inversion.

7.7. Divide the QC sample evenly between two 125-mL high-density polyethylene bottles.

7.8. Label each bottle with a QC sample number and store at room temperature pending analysis. The same QC number may be used for both aliquots of a QC sample from the same 200-mL volumetric flask.

8. Calculations

8.1. Record the concentration of each metal in the QC sample as μg/L or mg/L.

8.2. Calculate the spike concentration for each metal in the QC sample as in the following example.

8.2.1. If 3.0 mL of a 1000-μg/mL Sn standard is used to spike 180 mL of acidified water and the solution is diluted to 200 mL, the concentration of Sn in the sample is 15 mg/L. Multiply the result by the RSD calculated in Step 2.1 to obtain the uncertainty.

$$\frac{(1000\ \mu g/mL)\ (3.0\ mL)\ (1\ mg/1000\mu g)}{(200\ mL)\ (1\ L/1000\ mL)} = 15\ mg/L$$

9. Proper Waste Disposal Practices

9.1. Solid Waste

9.1.1. Solid waste contaminated with hazardous chemicals above the level of concern is not generated during the routine preparation of QC samples for analysis for inorganic contaminants.

9.1.2. If a solid waste is generated that may be contaminated at a level of concern, the appropriate paperwork is completed on a case-by-case basis.

9.1.2.1. A Waste Profile Request Form (WPRF) describing the solid waste is completed and sent to the Waste Management Group for review.

9.1.2.2. If the Waste Management Group determines that the solid waste is contaminated below the level of concern, the waste is disposed of as ordinary laboratory trash.

9.1.2.3. If the Waste Management Group determines that the solid waste is contaminated above the level of concern, pickup of the contaminated waste is requested as described in Sec. 9.3.

9.2. Liquid Waste

9.2.1. Liquid waste containing hazardous contaminants, such as solutions of trace metals, is accumulated in a coated glass bottle in a secondary containment tray and kept segregated from liquid waste contaminated with organic or radioactive substances or cyanide.

9.2.2. The bottle is labeled with a hazardous waste label and a label indicating its use for trace-metal waste.

9.2.3. The bottle is opened only for the period of time necessary to add waste to it.

9.2.4. When the bottle is full, it is capped and kept in the secondary containment tray pending pickup by the Waste Management Group.

9.2.5. A new bottle is labeled for further use.

9.3. Waste Pickup

9.3.1. Pickup by the Waste Management Group of solid waste or a full bottle of liquid waste containing trace metals is requested using the current Chemical Waste Disposal Request form (CWDR). The current Waste Profile Request Form (WPRF) that describes the waste is referenced on the CWDR.

9.3.2. The Waste Management Group picks up the waste for disposal in accord with Laboratory policy.

10. Source Materials

10.1. M. A. Gautier, E. S. Gladney, M. B. Phillips, and B. T. O'Malley, "Quality Assurance for Health and Environmental Chemistry: 1988," Los Alamos National Laboratory report LA-11637-MS (1989).

10.2. M. A. Gautier, E. S. Gladney, N. L. Koski, M. B. Phillips, E. A. Jones, and B. T. O'Malley, "Quality Assurance for Health and Environmental Chemistry: 1989," Los Alamos National Laboratory report LA-11995-MS (1990).

10.3. M. A. Gautier, E. S. Gladney, N. L. Koski, E. A. Jones, and B. T. O'Malley, "Quality Assurance for Health and Environmental Chemistry: 1990," Los Alamos National Laboratory report LA-12208-MS (1991).

10.4 "Chemical, Hazardous, and Mixed Waste," Administrative Requirement 10-3, in *Environment, Safety, and Health Manual*, Los Alamos National Laboratory Manual, Chapter 1 (most recent edition).

Revisions or additions to the procedure are marked (▒▒▒). Where a section heading is marked, the entire section has been revised.

TRACE ELEMENTS IN WATER — QC SAMPLE PREPARATION

Analytes: Boron, bromide, calcium, chloride, fluoride, lithium, magnesium, phosphorus, potassium, silicon, sodium, sulfate	**Method No.:** QCI190
Matrix: Water	**Spike Range:** Dependent on the element (see Table I)
Procedure: FIA, ACOLOR, ISE, or IC	**Accuracy and Precision:** 100% ± 3% RSD
Effective Date: 10/01/89	**Authors:** Nancy L. Koski Margaret A. Gautier

SAFETY NOTE: Before beginning this procedure, read all of the Material Safety Data Sheets for the chemicals listed in Sec. 5. Read Sec. 4.3 of the EM-9 Safety Manual for information on personal protective clothing and equipment. Read Sec. 9 of this procedure and Source Material 10.3 for proper waste disposal practices.

1. Principle of Method

1.1. Prepare individual standard solutions of bromide, chloride, fluoride, and sulfate salts in double-deionized water.

1.2. Obtain commercially prepared single-element solutions of boron, calcium, lithium, magnesium, phosphorus, potassium, silicon, and sodium.

1.3. Spike the chosen volume of each standard separately or in various combinations into double-deionized or distilled water as specified in Sec. 7.

1.4. Methods of analysis depend on the analyte and its concentration. They include flow injection analysis (FIA), ion-selective electrode (ISE), ion chromatography (IC), and colorimetry (ACOLOR).

1.5. The QC spike range depends on the analyte of interest and the analytical method. Refer to Table I for spike ranges.

TABLE I. SPIKE RANGES FOR TRACE ELEMENTS IN WATER

Analyte	Spike range (mg/L)	Analysis method
chloride (Cl)	5.0-50	FIA/IC
bromide (Br)	5.0-50	FIA/IC
fluoride (F)	0.1-2.0	ISE
sulfate (SO_4)	5.0-30	FIA/IC
phosphorus (P)	0.04-1.0	ACOLOR
boron (B)	0.1-6.0	FIA
silicon (Si)	3-50	FIA
silica (SiO_2)	5-100	FIA
sodium (Na)	5-30	IC
potassium (K)	3-20	IC
calcium (Ca)	5-30	IC
magnesium (Mg)	3-20	IC
lithium (Li)	1-10	IC

2. Accuracy and Precision

2.1. The propagated error on QC preparation is based on the error of the standard and on the error associated with the use of the pipette and volumetric flask. A relative standard deviation (RSD) of 3% at the 1σ level has been calculated for the error of the standard and for the spiking and dilution process based on the following function:

$$D = \frac{M_1 \times M_2}{M_3} ,$$

where D = calculated result,
M_1 = standard error,
M_2 = spiking error, and
M_3 = dilution error.

2.1.1. Calculate relative variance using the following equation.

$$R_M^2 = \frac{\sigma^2}{\overline{X}^2} ,$$

where $R^2{}_M$ = relative variance,
M = $M_1 \ldots M_n$ (variable),
σ^2 = variance (std dev^2),
$\overline{X}$ = mean value of each variable (M), and
100 = factor to convert to percent.

2.1.2. Calculate percent relative standard deviation using the following equation.

$$S_{D_T} = \sqrt{R_{M1}^2 + R_{M2}^2 + R_{M3}^2} \times 100 ,$$

where SD_T = relative standard deviation (% error),
$R^2{}_{M2}$ = relative variance of standard,
$R^2{}_{M2}$ = relative variance of pipette, and
$R^2{}_{M3}$ = relative variance of volumetric flask.

2.1.3. If a second pipette is used to obtain the desired analyte concentration, use the following equation.

$$R_{M_2} = \frac{\sqrt{\sigma_1^2 + \sigma_2^2}}{P_1 + P_2} ,$$

where σ_1 = standard deviation of first pipette error,
σ_2 = standard deviation of second pipette error,
P_1 = mean of first pipette, and
P_2 = mean of second pipette.

2.2. Analytical results from QC samples prepared between 1990 and 1991 using this procedure and analyzed by FIA, ISE, ACOLOR, and IC are tabulated below. The data are published in Source Materials 10.1 and 10.2.

SPIKE RECOVERY DATA FOR TRACE ELEMENTS IN WATER

Analyte	1990 mean ± SD (%)	N[a]	1991 mean ± SD (%)	N[a]
Na	107 ± 10	(21)	109 ± 15	(23)
SO_4	115 ± 13	(15)	113 ± 14	(16)
Si	100 ± 3	(4)	103 ± 0	(1)
K	99 ± 7	(13)	102 ± 7	(14)
P	120 ± 120	(9)	120 ± 60	(14)
Mg	103 ± 6	(31)	105 ± 7	(19)
Li	99 ± 11	(10)	130 ± 8	(5)
F	105 ± 10	(20)	113 ± 16	(13)
Cl	116 ± 19	(18)	119 ± 23	(13)
Ca	114 ± 16	(14)	113 ± 9	(14)
Br	120 ± 34	(10)	100 ± 12	(4)
B	98 ± 16	(77)	102 ± 5	(30)

[a]N = number of samples.

3. Collection and Storage of Samples

3.1. QC samples for boron, fluoride, and silicon are prepared in polypropylene flasks to avoid interactions with borosilicate glass. All other samples may be made in glass flasks.

3.2. Spiked QC samples are aliquoted and stored in high-density polyethylene bottles at room temperature pending analysis.

4. Apparatus

4.1. Flasks: 50-, 250-, and 500-mL, class A volumetric, glass.

4.2. Flasks: 50-, 100-, and 500-mL, volumetric, polypropylene, Nalgene or equivalent.

4.3. Spatula.

4.4. Pipettes: 1- and 2-mL, class A volumetric, glass.

4.5. Auto-pipette: 100-μL and 1000-μL, Rainin or equivalent.

4.6. Pipette tips: disposable.

4.7. Bottles: 60-, 125-, and 250-mL, high-density polyethylene.

4.8. Balance: 100-g minimum capacity, 0.1-mg accuracy.

4.9. Labels printed with QC sample numbers.

5. Reagents

5.1. Water. Double-deionized, >10 MΩ/cm resistivity, specified in document ASTM-D1193 as ASTM Type I water and referred to in this procedure as double-deionized water.

5.2. Distilled water. Used to dilute silicon QC samples. Deionized water is not used because deionization may result in high levels of silicon when the resin begins to degrade, even though the resistivity of the water remains acceptable.

5.3. Potassium bromide (anhydrous, reagent-grade).

5.4. Sodium chloride (reagent-grade).

5.5. Sodium fluoride (reagent-grade).

5.6. Sodium sulfate (anhydrous, reagent-grade).

6. Calibration and Standards

6.1. Spectroscopy-grade metal standards (1000-10,000 μg/mL). Spex Industries, Inc., 3880 Park Avenue, Edison, NJ 08820, or equivalent.

6.2. If a more dilute standard is needed to reach the desired spike range, dilute a concentrated standard, taking care to match the kind and concentration of acid in the dilution to those in the concentrated standard. Use distilled water to make dilutions of a silicon standard.

6.3. Standard solutions for bromide, chloride, fluoride, and sulfate are made from salts.

6.4. Thoroughly rinse all glassware before preparing standards. The presence of nitric acid may oxidize bromide ion to bromine; it will also interfere with analysis by ion chromatography by giving a broad nitrate ion peak, which may obscure the differentation and quantitation of other anions present.

6.5. Prepare a standard solution of bromide ion at approximately 20 mg/mL using solid anhydrous potassium bromide.

6.5.1. Accurately weigh 1.5 ± 0.03 g of solid anhydrous potassium bromide into a 50-mL volumetric flask.

6.5.2. Add approximately 30 mL of double-deionized water and swirl the flask to dissolve the salt.

6.5.3. Dilute the solution to volume with double-deionized water and mix by inversion.

6.5.4. Transfer the solution to a 60-mL high-density polyethylene bottle and label the bottle with information identifying the standard.

6.5.5. Record information on standard preparation in the QC Laboratory notebook.

6.6. Prepare a standard solution of chloride ion at approximately 20 mg/mL using sodium chloride.

6.6.1. Dry 2 ± 0.1 g of solid sodium chloride at approximately 140°C for 30 minutes before using it to prepare the standard chloride solution.

6.6.2. Accurately weigh 1.65 ± 0.04 g of dried sodium chloride into a 50-mL volumetric flask.

6.6.3. Add approximately 30 mL of double-deionized water and swirl the flask to dissolve the salt.

6.6.4. Dilute the solution to volume with double-deionized water and mix by inversion.

6.6.5. Transfer the solution to a 60-mL high-density polyethylene bottle and label the bottle with information identifying the standard.

6.6.6. Record information on standard preparation in the QC Laboratory notebook.

6.7. Prepare a standard solution of fluoride ion at approximately 1000 μg/mL using solid sodium fluoride.

6.7.1. Make the fluoride standard in a polypropylene (Nalgene) volumetric flask to avoid reaction of the fluoride with borosilicate glass.

6.7.2. Accurately weigh 0.11 ± 0.005 g of solid anhydrous sodium fluoride into a 50-mL polypropylene volumetric flask.

6.7.3. Add approximately 30 mL of double-deionized water and swirl the flask to dissolve the salt.

6.7.4. Dilute the solution to volume with double-deionized water and mix by inversion.

6.7.5. Transfer the solution to a 60-mL high-density polyethylene bottle and label the bottle with information identifying the standard.

6.7.6. Record information on standard preparation in the QC Laboratory notebook.

6.8. Prepare a standard solution of sulfate ion at approximately 20 mg/mL using solid anhydrous sodium sulfate.

6.8.1. Accurately weigh 1.48 ± 0.03 g of solid anhydrous sodium sulfate into a 50-mL volumetric flask.

6.8.2. Add approximately 30 mL of double-deionized water and swirl the flask to dissolve the salt.

6.8.3. Dilute the solution to volume with double-deionized water and mix by inversion.

6.8.4. Transfer the solution to a 60-mL high-density polyethylene bottle and label the bottle with information identifying the standard.

6.8.5. Record information on standard preparation in the QC Laboratory notebook.

7. Procedure

7.1. Prepare QC samples to equal at least 10% of the number of samples to be analyzed. Periodically omit one or more analytes from the QC sample as a blank QC for those analytes.

7.2. QC samples may be prepared in larger or smaller quantities than described in this procedure, adjusting apparatus size as necessary.

7.3. This step describes the preparation of three approximately 150-mL aliquots of a standard containing bromide, chloride, fluoride, and sulfate anions.

7.3.1. Prepare QC samples containing fluoride in polypropylene (Nalgene) volumetric flasks to avoid loss of fluoride ion due to reaction with borosilicate glass.

7.3.2. Place approximately 400 mL of double-deionized water into a 500-mL polypropylene volumetric flask.

7.3.3. Spike aliquots of bromide, chloride, fluoride, and sulfate standards made from salts of the anions into the water to reach the desired spike range listed in Table I.

7.3.4. Dilute the QC sample to volume with double-deionized water. Mix by inversion.

7.3.5. Divide the QC sample evenly among three 250-mL high-density polyethylene bottles.

7.3.6. Label each bottle with a QC sample number and store at room temperature pending analysis. The same QC number may be used for all aliquots of a QC sample from the same 500-mL volumetric flask.

7.4. This step describes the preparation of four 25-mL aliquots of boron standard.

7.4.1. Prepare QC samples containing boron in polypropylene (Nalgene) volumetric flasks to prevent contamination by leaching of borosilicate glass surfaces.

7.4.2. Place approximately 80 mL of double-deionized water into a 100-mL polypropylene volumetric flask.

7.4.3. Add an aliquot of boron standard solution to the water to reach the desired spike range listed in Table I.

7.4.4. Dilute the QC sample to volume with double-deionized water. Mix by inversion.

7.4.5. Divide the QC sample evenly among four 60-mL high-density polyethylene bottles.

7.4.6. Label each bottle with a QC sample number and store at room temperature pending analysis. The same QC number may be used for all aliquots of a QC sample from the same 100-mL volumetric flask.

7.5. This step describes the preparation of five 100-mL aliquots of silicon standard.

7.5.1. Prepare QC samples containing silicon in polypropylene (Nalgene) volumetric flasks to prevent contamination by leaching of borosilicate glass surfaces.

7.5.2. Use distilled water to prepare silicon QC samples. Degrading ion-exchange resin used to make double-deionized water may contaminate the sample with silicon.

7.5.3. Place approximately 400 mL of distilled water into a 500-mL polypropylene volumetric flask.

7.5.4. Add an aliquot of silicon standard to the water to reach the desired spike range for silicon listed in Table I.

7.5.5. Dilute the QC sample to volume with distilled water. Mix by inversion.

7.5.6. Divide the QC sample evenly among five 125-mL high-density polyethylene bottles.

7.5.7. Label each bottle with a QC sample number and store at room temperature pending analysis. The same QC number may be used for all five aliquots of a QC sample from the same 500-mL volumetric flask.

7.6. This step describes the preparation of five 100-mL aliquots of phosphorus standard.

7.6.1. Place approximately 400 mL of double-deionized water into a 500-mL volumetric flask.

7.6.2. Add an aliquot of phosphorus standard solution to the water to reach the desired spike range listed in Table I.

7.6.3. Dilute the QC sample to volume with double-deionized water. Mix by inversion.

7.6.4. Divide the QC sample evenly among five 125-mL high-density polyethylene bottles.

7.6.5. Label each bottle with a QC sample number and store at room temperature pending analysis. The same QC number may be used for all aliquots of a QC sample from the same 500-mL volumetric flask.

7.7. This step describes the preparation of five 50-mL aliquots of a standard containing calcium, magnesium, potassium, sodium, and lithium.

7.7.1. Place approximately 200 mL of double-deionized water into a 250-mL volumetric flask.

7.7.2. Add aliquots of the Ca, Mg, K, Na, and Li standard solutions to the water to reach the desired spike range listed in Table I.

7.7.3. Dilute the QC sample to volume with double-deionized water. Mix by inversion.

7.7.4. Divide the QC sample evenly among five 60-mL high-density polyethylene bottles.

7.7.5. Label each bottle with a QC sample number and store at room temperature pending analysis. The same QC number may be used for all aliquots of a QC sample from the same 250-mL volumetric flask.

7.8. For each QC sample prepared, record QC standard information, sample number, sample description, spike amount, concentration, uncertainty, and all calculations in the QC Laboratory notebook and enter them into the CVS and CVD data bases on the VAX. Record the concentration of the silicon QC sample in terms of both Si and SiO_2.

8. Calculations

8.1. Calculate the concentration of a bromide standard solution made from anhydrous potassium bromide using the following atomic weights and example.

8.1.1. Atomic weight of K = 39.1
Atomic weight of Br = 79.9

8.1.2. If 1.5000 g of KBr is dissolved in 50 mL of double-deionized water, the bromide concentration in the standard is 20 mg/mL.

$$\frac{\left(\frac{79.9 \text{ g Br}}{119.0 \text{ g KBr}}\right)(1.5000 \text{ g})(1000 \text{ mg/g})}{50 \text{ mL}} = 20 \text{ mg/mL}$$

8.2. Calculate the concentration of a chloride standard solution made from dried sodium chloride using the following atomic weights and example.

8.2.1. Atomic weight of Na = 23.0
Atomic weight of Cl = 35.5

8.2.2. If 1.6500 g of NaCl is dissolved in 50 mL of double-deionized water, the chloride concentration in the standard is 20 mg/L.

$$\frac{\left(\frac{35.5 \text{ g Cl}}{58.5 \text{ g NaCl}}\right)(1.6500 \text{ g})(1000 \text{ mg/g})}{50 \text{ mL}} = 20 \text{ mg/L}$$

8.3. Calculate the concentration of a fluoride standard solution made from sodium fluoride using the following atomic weights and example.

8.3.1. Atomic weight of Na = 23.0
Atomic weight of F = 19.0

8.3.2. If 0.1110 g of NaF is dissolved in 50 mL of double-deionized water, the fluoride concentration in the standard is 1004 μg/mL.

$$\frac{\left(\frac{19.0 \text{ g F}}{42.0 \text{ g NaF}}\right)(0.1110 \text{ g})(1{,}000{,}000 \ \mu\text{g/g})}{50 \text{ mL}} = 1004 \ \mu\text{g/mL}$$

8.4. Calculate the concentration of a sulfate standard solution made from anhydrous sodium sulfate using the following atomic weights and example.

8.4.1. Atomic weight of Na = 23.0
Atomic weight of S = 32.1
Atomic weight of O = 16.0

8.4.2. If 1.4750 g of Na_2SO_4 is dissolved in 50 mL of double-deionized water, the sulfate concentration in the standard is 20 mg/mL.

$$\frac{\left(\frac{96.1 \text{ g } SO_4}{142.1 \text{ g } Na_2SO_4}\right)(1.4750 \text{ g})(1000 \text{ mg/g})}{50 \text{ mL}} = 20 \text{ mg/mL}$$

8.5. Record the concentration of each analyte in a QC sample as μg/L or mg/L.

8.6. Calculate spike concentrations for each analyte in the QC sample as in the following examples.

8.6.1. If 750 μL of a 20-mg/mL Br standard is spiked into 400 mL of double-deionized water and the solution is diluted to 500 mL, the concentration

of Br in the QC sample is 30 mg/L. Multiply the result by the RSD calculated in Step 2.1 to obtain the uncertainty.

$$\frac{(20\ \text{mg/mL})\ (1\ \text{mL}/1000\ \mu\text{L})\ (750\ \mu\text{L})}{(500\ \text{mL})\ (1\ \text{L}/1000\ \text{mL})} = 30\ \text{mg/L}$$

8.6.2. If 300 μL of a 1000-μg/mL boron standard is spiked into 80 mL of double-deionized water and the solution is diluted to 100 mL, the concentration of boron in the QC sample is 3 mg/L. Multiply the result by the RSD calculated in Step 2.1 to obtain the uncertainty.

$$\frac{(1000\ \mu\text{g/mL})\left(\frac{1\ \text{mL}}{1000\ \mu\text{L}}\right)(300\mu\text{L})\left(\frac{1\ \text{mg}}{1000\ \mu\text{g}}\right)}{(100\ \text{mL})\ (1\ \text{L}/1000\ \text{mL})} = 3\ \text{mg/L}$$

8.6.3. If 900 μL of a 10,000-μg/mL Si standard is spiked into 400 mL of distilled water and the solution is diluted to 500 mL, the concentration of Si in the QC sample is 18 mg/L. The concentration of a Si QC sample is recorded in terms of both Si and SiO_2.

$$\frac{(10{,}000\ \mu\text{g/mL})\left(\frac{1\ \text{mL}}{1000\ \mu\text{L}}\right)(900\ \mu\text{L})\left(\frac{1\ \text{mg}}{1000\ \mu\text{g}}\right)}{(500\ \text{mL})\ (1\ \text{L}/1000\ \text{mL})} = 18\ \text{mg/L}$$

The concentration of the QC sample in terms of SiO_2 is calculated from the concentration in terms of Si.

A QC sample with a concentration of 18 mg/L Si has a concentration of 38 mg/L SiO_2.

$$(18\ \text{mg Si/L})\left(\frac{60.1\ \text{g}\ SiO_2}{28.1\ \text{g Si}}\right) = 38\ \text{mg}\ SiO_2/\text{L}$$

Multiply the result by the RSD calculated in Step 2.1 to obtain the uncertainty.

8.6.4. If 250 μL of a 1000-μg/mL P standard is spiked into 400 mL of double-deionized water and the solution is diluted to 500 mL, the concentration of P in the QC sample is 500 μg/L. Multiply the result by the RSD calculated in Step 2.1 to obtain the uncertainty.

$$\frac{(1000\ \mu g/mL)\left(\frac{mL}{1000\ \mu L}\right)(250\ \mu L)}{(500\ mL)\ (1\ L/1000\ mL)} = 500\ \mu g/L$$

8.6.5. If 150 μL of a 10,000-μg/mL Mg standard is spiked into 200 mL of double-deionized water and the solution is diluted to 250 mL, the concentration of Mg in the QC sample is 6 mg/L. Multiply the result by the RSD calculated in Step 2.1 to obtain the uncertainty.

$$\frac{(10{,}000\ \mu g/mL)\left(\frac{1\ mL}{1000\ \mu L}\right)(150\ \mu L)\left(\frac{1\ mg}{1000\ \mu g}\right)}{(250\ mL)\ (1\ L/1000\ mL)} = 6\ mg/L$$

9. Proper Waste Disposal Practices

9.1. Solid Waste

9.1.1. Solid waste contaminated with hazardous chemicals above the level of concern is not generated during the routine preparation of QC samples for analysis for inorganic contaminants.

9.1.2. If a solid waste is generated that may be contaminated at a level of concern, the appropriate paperwork is completed on a case by case basis.

9.1.2.1. A Waste Profile Request Form (WPRF) describing the solid waste is completed and sent to the Waste Management Group for review.

9.1.2.2. If the Waste Management Group determines that the solid waste is contaminated below the level of concern, the waste is disposed of as ordinary laboratory trash.

9.1.2.3. If the Waste Management Group determines that the solid waste is contaminated above the level of concern, pickup of the contaminated waste is requested as described in Sec. 9.3.

9.2. Liquid Waste

9.2.1. Liquid waste containing hazardous contaminants, such as solutions of trace metals, is accumulated in a coated glass bottle in a secondary containment tray and kept segregated from liquid waste contaminated with organic or radioactive substances or cyanide.

9.2.2. The bottle is labeled with a hazardous waste label and a label indicating its use for trace-metal waste.

9.2.3. The bottle is opened only for the period of time necessary to add waste to it.

9.2.4. When the bottle is full, it is capped and kept in the secondary containment tray pending pickup by the Waste Management Group.

9.2.5. A new bottle is labeled for further use.

9.3. Waste Pickup

9.3.1. Pickup by the Waste Management Group of solid waste or a full bottle of liquid waste containing trace metals is requested using the current Chemical Waste Disposal Request form (CWDR). The current Waste Profile Request Form (WPRF) that describes the waste is referenced on the CWDR.

9.3.2. The Waste Management Group picks up the waste for disposal in accord with Laboratory policy.

10. Source Materials

10.1. M. A. Gautier, E. S. Gladney, N. L. Koski, M. B. Phillips, E. A. Jones, and B. T. O'Malley, "Quality Assurance for Health and Environmental Chemistry: 1989," Los Alamos National Laboratory report LA-11995-MS (1990).

10.2. M. A. Gautier, E. S. Gladney, N. L. Koski, E. A. Jones, and B. T. O'Malley, "Quality Assurance for Health and Environmental Chemistry: 1990," Los Alamos National Laboratory report LA-12208-MS (1991).

10.3. "Chemical, Hazardous, and Mixed Waste," Administrative Requirement 10-3, in *Environment, Safety, and Health Manual*, Los Alamos National Laboratory Manual, Chapter 1 (most recent edition).

Revisions or additions to the procedure are marked (▒▒▒▒). Where a section heading is marked, the entire section has been revised.

TRACE ELEMENTS FOR WATER AND SOIL (MERCURY BY TCLP) — QC SAMPLE PREPARATION

Analyte: Hg	**Method No.:** QCI200
Matrix: Water	**Spike Range:** 1-4 μg/L
Procedure: Toxicity Characteristic Leaching Procedure (TCLP) followed by cold vapor atomic absorption (CVAA) spectroscopy	**Accuracy and Precision:** 100% ± 5.9% RSD
Effective Date: 09/29/89	**Authors:** Nancy L. Koski Margaret A. Gautier

SAFETY NOTE: Before beginning this procedure, read all of the Material Safety Data Sheets for the chemicals listed in Sec. 5. Read Sec. 4.3 of the EM-9 Safety Manual for information on personal protective clothing and equipment. Read Sec. 9 of this procedure and Source Material 10.5 for proper waste disposal practices.

1. Principle of Method

1.1. Acidified water containing $Cr_2O_7^{=}$ as a stabilizer is spiked with a Hg standard.

1.2. The acidified water QC represents the solution resulting from the extraction of Hg from a soil matrix.

1.3. QC samples are submitted for analysis with each analytical batch and are analyzed along with the unknown samples using the same analytical procedure or those sections of the procedure that are applicable.

2. Accuracy and Precision

2.1. The propagated error on QC preparation is based on the calibration error of the standard and on the error associated with use of the volumetric flask and of the pipette. A relative standard deviation (RSD) of 5.9% at the 1σ level has been calculated for the calibration, spiking, and dilution process based on the following function:

$$D = \frac{M1 \times M2}{M3} ,$$

where D = calculated result,
M1 = calibration error,
M2 = spiking error, and
M3 = dilution error.

2.1.1. Calculate relative variance using the following equation.

$$R_M^2 = \frac{\sigma^2}{\overline{X}^2} ,$$

where R^2_M = relative variance,
M = $M_1 \ldots M_n$ (variable),
σ^2 = variance (std dev^2), and
$\overline{X}$ = mean value of each variable (M).

2.1.2. Calculate percent relative standard deviation using the following equation.

$$S_{D_T} = \sqrt{R_{M1}^2 + R_{M2}^2 + R_{M3}^2} \times 100 ,$$

where S_{D_T} = relative standard deviation (% error),
R^2_{M1} = relative variance of standard,
R^2_{M2} = relative variance of pipette,
R^2_{M3} = relative variance of volumetric flask, and
100 = factor to convert to percentage.

2.2. Analytical results from QC samples prepared during 1989 and 1990 using this procedure and analyzed by cold vapor atomic absorption spectroscopy (N = 295) gave a mean recovery of 93% ± 9% at the 1σ level. The data are summarized below and are published in Source Materials 10.2 and 10.3.

MERCURY SPIKE RECOVERY AS A FUNCTION OF CONCENTRATION

	Spike range μg/L	Mean ± SD (%)	Number of samples
1989	2.0-2.9	88 ± 7	91
	3.0-4.0	100 ± 3	78
1990	1.0-1.9	73 ± 20	6
	2.0-2.9	103 ± 1	24
	3-4.0	103 ± 2	96

3. Collection and Storage of Samples

3.1. Low-level Hg solutions must be stabilized to maintain their certified concentration longer than a few hours. Studies of the preservation of dilute Hg solutions (see Step 9.1) show that a dilute Hg solution will maintain its concentration for as long as five months if it is preserved with 0.01% $Cr_2O_7^=$ and 5% nitric acid and stored in a glass container.

3.2. QC samples are stored in glass bottles at room temperature pending analysis.

3.3. If QC samples for Hg are not used within five months of the date they were made, they are discarded.

4. Apparatus

4.1. Volumetric flasks: 5-, 25-, and 250-mL.

4.2. Auto-pipette: 100- and 1000-μL, Rainin or equivalent.

4.3. Pipette tips: disposable.

4.4. Graduated cylinder: 25-mL.

4.5. Bottles: 4-oz., glass, with Teflon-lined screw caps.

4.6. Balance: 100-g minimum capacity, 0.1-mg accuracy.

4.7. Spatula.

4.8. Weighing dish: small, polyethylene.

4.9. Labels printed with QC sample numbers.

5. Reagents

5.1. Nitric acid (16 M, ultrapure) suitable for trace metal analysis.

5.2. Water. In this procedure, water referred to as "reagent water" is understood to mean reagent water conforming to ASTM Types I, II, or III and free of interferences with the analytical method.

5.3. Potassium dichromate (analytical reagent-grade).

6. Calibration and Standards

6.1. Spectroscopy-grade Hg standard solution, 10-μg/mL concentration preferred. More concentrated standards, such as those supplied by Spex Industries, Inc., 3880 Park Avenue, Edison, NJ 08820, may be diluted to a Hg concentration of 10 μg/mL.

6.2. A spectroscopy-grade 10-μg/mL Hg standard solution is spiked into acidified water containing $K_2Cr_2O_7$ as a stabilizer for the Hg.

7. Procedure

7.1. Prepare a stabilizing solution for the Hg with a $Cr_2O_7^=$ concentration of 50 mg/mL.

7.1.1. Tare a small polyethylene weighing dish on the balance.

7.1.2. Accurately weigh 341 ± 2 mg of analytical-grade $K_2Cr_2O_7$ into the weighing dish.

7.1.3. Use reagent water to quantitatively rinse the $K_2Cr_2O_7$ into a 5-mL volumetric flask and to dilute the solution to volume. Mix by inversion.

7.1.4. Calculate the $Cr_2O_7^=$ concentration of the stabilizing solution as in the example in Step 8.1.

7.2. Prepare a 10-μg/mL Hg standard solution from a 1000-μg/mL standard solution.

7.2.1. Place 15 mL of reagent water into a 25-mL volumetric flask.

7.2.2. Add 2.5 mL of ultrapure nitric acid to the water in the flask to produce a final acid concentration of 10% by volume.

7.2.3. Add 50 μL of the stabilizing solution with a $Cr_2O_7^=$ concentration of 50 mg/mL to the acidified water to produce a $Cr_2O_7^=$ concentration of 0.01% by weight.

CAUTION: The nitric acid and $Cr_2O_7^=$ stabilizing solution must be added to the water before the mercury spike to prevent the immediate loss of Hg.

7.2.4. Add 250 μL of a 1000-μg/mL Hg standard solution to the water in the flask.

7.2.5. Dilute to volume with reagent water. Mix by inversion.

7.3. Prepare QC samples to equal at least 10% of the number of samples to be analyzed. Periodically include a sample of 5% HNO_3 and 0.01% $Cr_2O_7^=$ as a blank.

7.4. This procedure describes the preparation of two approximately 100-mL aliquots of a QC sample. QC solutions may be prepared in larger or smaller quantities than described in this procedure. Adjust apparatus size as necessary.

7.5. Place approximately 200 mL of reagent water into a 250-mL volumetric flask.

7.6. Add 12.5 mL of ultrapure nitric acid to the water to produce a final acid concentration of 5% by volume.

7.7. Add 500 μL of the stabilizing solution with a $Cr_2O_7^=$ concentration of 50 mg/mL to the acidified water to produce a $Cr_2O_7^=$ concentration of 0.01% by weight.

NOTE: The nitric acid and $Cr_2O_7^=$ stabilizing solution must be added to the water before the mercury spike to prevent the immediate loss of Hg.

7.8. Spike an aliquot of the 10-μg/mL Hg standard into the acidified water to reach the desired spike range.

7.9. Dilute the QC sample to volume with reagent water. Mix by inversion.

7.10. Divide the QC sample evenly between two 4-oz. glass bottles.

7.11. Label each bottle with a QC sample number and store at room temperature pending analysis. The same QC number may be used for both aliquots of a QC sample from the same 250-mL volumetric flask.

7.12. Record QC standard information, sample number, sample description, spike amount, concentration, uncertainty, and all calculations in the QC Laboratory notebook and enter them into the CVS and CVD data bases on the VAX.

8. Calculations

8.1. Calculate the $Cr_2O_7^=$ concentration of the stabilizing solution using the following atomic weights and example.

8.1.1. Atomic weights: K = 39.1, Cr = 52.0, and O = 16.0.

8.1.2. If 341.0 mg of $K_2Cr_2O_7$ is dissolved in 5 mL of reagent water, the $Cr_2O_7^=$ concentration in the stabilizing solution is 50 mg/mL.

$$\frac{\left(\frac{216.0 \text{ g } Cr_2O_7^{=}}{294.2 \text{ g } K_2Cr_2O_7}\right)(341.0 \text{ mg } K_2Cr_2O_7)}{5 \text{ mL}} = 50 \text{ mg } Cr_2O_7^{=}/\text{mL}$$

8.2. Calculate Hg spike concentrations as in the following example.

8.2.1. If 50 μL of a 10-μg/mL Hg standard is diluted to 250 mL in acidified water containing $Cr_2O_7^{=}$ stabilizing solution, the Hg concentration in the sample is 2 μg/L. Multiply the result by the RSD calculated in Step 2.1 to obtain the uncertainty.

$$\frac{(10 \ \mu\text{g/mL})\ (1 \text{ mL}/1000 \ \mu\text{L})\ (50 \ \mu\text{L})}{(250 \text{ mL})\ (1 \text{ L}/1000 \text{ mL})} = 2 \ \mu\text{g/L}$$

9. Proper Waste Disposal Practices

9.1. Solid waste.

9.1.1. Solid waste contaminated with hazardous chemicals above the level of concern is not normally generated during the routine preparation of QC samples for analysis for inorganic contaminants.

9.1.2. If a solid waste is generated that may be contaminated at a level of concern, complete the appropriate paperwork on a case-by-case basis.

9.1.2.1. Complete a Waste Profile Request Form (WPRF) describing the solid waste and send to the Waste Management group for review.

9.1.2.2. If the Waste Management group determines that the solid waste is contaminated below the level of concern, dispose of the waste as ordinary laboratory trash.

9.1.2.3. If the Waste Management group determines that the solid waste is contaminated above the level of concern, request pickup of the contaminated waste as described in Sec. 9.3.

9.2. Liquid waste.

9.2.1. Accumulate liquid waste containing hazardous contaminants, such as solutions of trace metals, in a coated glass bottle in a secondary containment tray. Keep it segregated from liquid waste contaminated with organic or radioactive substances or cyanide.

9.2.2. Label the bottle with a hazardous waste label and a label indicating its use for trace metal waste.

9.2.3. Open the bottle only for the period of time necessary to add waste to it.

9.2.4. When the bottle is full, cap it and keep it in the secondary containment tray pending pickup by the Waste Management group.

9.2.5. Label a new bottle for further use.

9.3. Waste pickup.

9.3.1. Request pickup by the Waste Management group of solid waste or a full bottle of liquid waste containing trace metals using the current Chemical Waste Disposal Request form (CWDR). The current Waste Profile Request Form (WPRF) which describes the waste is referenced on the CWDR.

9.3.2. The Waste Management group picks up the waste for disposal in accord with Laboratory policy.

10. Source Materials

10.1. C. Feldman, "Preservation of Dilute Mercury Solutions," *Anal. Chem.* **46**, 99-102 (1974).

10.2. M. A. Gautier, E. S. Gladney, N. L. Koski, M. B. Phillips, E. A. Jones, and B. T. O'Malley, "Quality Assurance for Health and Environmental Chemistry: 1989," Los Alamos National Laboratory report LA-11995-MS (1990).

10.3. M. A. Gautier, E. S. Gladney, N. L. Koski, E. A. Jones, and B. T. O'Malley, "Quality Assurance for Health and Environmental Chemistry: 1990," Los Alamos National Laboratory report LA-12208-MS (1991).

10.4. SPEX Industries, Inc., "Certificate of Analysis for Metals" (SPEX Industries, Inc., Edison, NJ 08820, October 1990).

10.5. "Hazardous and Mixed Waste," Administrative Requirement 10-3, in *Environment, Safety, and Health Manual*, Los Alamos National Laboratory Manual, Chapter 1 (most recent edition).

10.6. ASTM, *1992 Annual Book of ASTM Standards*, Vol. 11.01, specification D1193-91, Standard Specification for Reagent Water, pp. 45-47.

Revisions or additions to the procedure are marked (▒▒▒▒). Where a section heading is marked, the entire section has been revised.

TRACE ELEMENTS IN WATER (CN) — QC SAMPLE PREPARATION

Analyte: CN	**Method No.:** QCI210
Matrix: Water	**Spike Range:** 0.1-0.5 mg/L
Procedure: Automated colorimetry	**Accuracy and Precision:** 100% ± 12% RSD
Effective Date: 02/02/90	**Authors:** Nancy L. Koski Margaret A. Gautier

SAFETY NOTE: Before beginning this procedure, read all of the Material Safety Data Sheets for the chemicals listed in Sec. 5. Read Sec. 4.3 of the EM-9 Safety Manual for information on personal protective clothing and equipment. Read Sec. 9 of this procedure and Source Material 10.3 for proper waste disposal practices.

1. Principle of Method

1.1. Slightly alkaline blank water is spiked with an Environmental Protection Agency (EPA) cyanide QC sample.

1.2. QC samples are submitted for analysis with each analytical batch and are analyzed along with the unknown samples using the same analytical procedure.

2. Accuracy and Precision

2.1. The propagated error on QC preparation is based on the calibration error of the standard and on the error associated with use of the volumetric flask and of the pipette. A relative standard deviation (RSD) of 12% at the 1σ level has been calculated for the calibration, spiking, and dilution process based on the following function:

$$D = \frac{M1 \times M2}{M3} ,$$

where D = calculated result,
M1 = calibration error,
M2 = spiking error, and
M3 = dilution error.

2.1.1. Calculate relative variance using the following equation.

$$R_M^2 = \frac{\sigma^2}{\overline{X}^2} ,$$

where R^2_M = relative variance,
M = $M_1 \ldots M_n$ (variable),
σ^2 = variance (std dev^2), and
$\overline{X}$ = mean value of each variable (M).

2.1.2. Calculate percent relative standard deviation using the following equation.

$$SD_T = \sqrt{R_{M1}^2 + R_{M2}^2 + R_{M3}^2} \times 100 ,$$

where SD_T = relative standard deviation (% error),
R^2_{M1} = relative variance of standard,
R^2_{M2} = relative variance of pipette,
R^2_{M3} = relative variance of volumetric flask, and
100 = factor to convert to percentage.

2.2. Analytical results from QC samples prepared during 1990 using this procedure and analyzed by automated colorimetry (N = 11) gave a mean recovery of 83% ± 13% at the 1σ level. The data are published in Source Material 10.2.

3. Collection and Storage of Samples

3.1. QC samples are prepared in a volumetric flask and are aliquoted into high-density polyethylene bottles and refrigerated pending analysis.

CAUTION: QC samples must be prepared in an alkaline matrix because cyanide in an acid matrix will release hydrogen cyanide gas which is extremely hazardous.

4. Apparatus

4.1. Flasks: 250-mL, volumetric, glass, class A.

4.2. Auto-pipette: 100- and 1000-μL, Rainin or equivalent.

4.3. Pipette tips: disposable.

4.4. Pipette: 2-mL, volumetric, class A.

4.5. Bottles: 60-mL, high-density polyethylene.

4.6. Labels printed with QC sample numbers.

4.7. Glass vials: with Teflon-lined caps.

5. Reagents

5.1. Sodium hydroxide (50% or approximately 10 M).

5.2. Water. In this procedure, water referred to as "reagent water" is understood to mean water conforming to ASTM Types I, II, or III and free of interferences with the analytical method.

6. Calibration and Standards

6.1. An Environmental Protection Agency-Environmental Monitoring Systems Laboratory (EPA-EMSL) Cyanide Quality Control sample is used as a stock solution.

6.2. EPA records the concentration of the standard after dilution according to EPA instructions. The concentration of the original stock solution must be back-calculated before it is used, taking the EPA dilution instructions into consideration.

7. Procedure

7.1. Prepare QC samples to equal at least 10% of the number of samples to be analyzed. Periodically include an unspiked water sample made alkaline with 0.02 M NaOH as a blank.

7.2. This procedure describes the preparation of five 50-mL aliquots of QC samples. QC samples may be prepared in larger or smaller quantities than described in this procedure. Adjust apparatus size as necessary.

7.3. Back-calculate the concentration of the undiluted EPA cyanide stock solution. See Step 8.1.

7.4. Place approximately 200 mL of reagent water in a 250-mL volumetric flask.

7.5. Add 500 μL of 50% NaOH to the water to produce a final NaOH concentration of 0.02 M.

CAUTION: Cyanide compounds must not be added to an acidic solution because hydrogen cyanide gas is released and is very hazardous. Work with cyanide solutions in an approved fume hood.

7.6. Spike an aliquot of undiluted EPA cyanide sample into the water in the flask to reach the desired spike range.

7.7. Dilute the QC sample to volume with reagent water. Mix by inversion.

7.8. Divide the QC sample evenly among five 60-mL high-density polyethylene bottles.

7.9. Label each bottle with a QC sample number and refrigerate pending analysis. Use the same QC number for all five aliquots of the QC sample.

7.10. Record QC standard information, sample number, sample description, spike amount, concentration, uncertainty, and all calculations in the QC Laboratory notebook and enter them into the CVS and CVD data bases on the VAX.

7.11. Store the unused portion of the EPA cyanide sample in a glass vial with a Teflon-lined cap and refrigerate.

8. Calculations

8.1. Back-calculate the concentration of the undiluted EPA cyanide sample as in the following example.

8.1.1. If the concentration of an EPA cyanide sample is 0.50 mg/L after dilution of a 10-mL aliquot to 1 L according to EPA instructions, the concentration of the undiluted cyanide sample is calculated as follows:

$$(0.50 \text{ mg/L})\ (1 \text{ L}/10 \text{ mL}) = 0.05 \text{ mg/mL}$$

8.1.2 The concentration of 0.05 mg/mL is then used to determine the aliquot used to spike the alkaline water sample.

8.2. Record the concentration of CN in the QC sample as mg/L.

8.3. Calculate CN concentrations as in the following example.

8.3.1. If 2 mL of a 0.05-mg/mL CN standard is used to spike 250 mL of alkaline water, the concentration of CN in the sample will be 0.40 mg/L. Multiply the result by the RSD calculated in Step 2.1 to obtain the uncertainty.

$$\frac{(0.05\ \text{mg/mL})\ (2\ \text{mL})}{(250\ \text{mL})\ (1\ \text{L}/1000\ \text{mL})} = 0.40\ \text{mg/L} \quad .$$

9. Proper Waste Disposal Practices

9.1. Solid waste.

9.1.1. Solid waste contaminated with hazardous chemicals above the level of concern is not normally generated during the routine preparation of QC samples for analysis for inorganic contaminants.

9.1.2. If a solid waste is generated that may be contaminated at a level of concern, complete the appropriate paperwork on a case-by-case basis.

9.1.2.1. Complete a Waste Profile Request Form (WPRF) describing the solid waste and send to the Waste Management group for review.

9.1.2.2. If the Waste Management group determines that the solid waste is contaminated below the level of concern, dispose of the waste as ordinary laboratory trash.

9.1.2.3. If the Waste Management group determines that the solid waste is contaminated above the level of concern, request pickup of the contaminated waste as described in Step 9.3.

9.2. Liquid waste.

9.2.1. Accumulate liquid waste contaminated with cyanide in a glass bottle in a secondary containment tray and keep it in a basic solution segregated from any other liquid waste.

9.2.2. Label the bottle with a hazardous waste label and a label indicating the presence of cyanide. If the bottle is too small to accommodate the hazardous waste label, apply the label to the secondary container.

9.2.3. Open the bottle only for the period of time necessary to add waste to it and keep it in a functioning fume hood whenever it is open.

9.2.4. When the waste is ready for disposal, keep the bottle in the secondary containment tray pending pickup by the Waste Management group.

9.3. Waste pickup.

9.3.1. Request pickup by the Waste Management group of a bottle of cyanide-contaminated waste using the current Chemical Waste Disposal Request (CWDR) form. The current Waste Profile Request Form (WPRF) which describes the waste is referenced on the CWDR.

9.3.2. The Waste Management group picks up the waste for disposal in accord with Laboratory policy.

10. Source Materials

10.1. US EPA, "Instructions for Cyanide Quality Control Sample," (US Environmental Protection Agency, Environmental Monitoring Systems Laboratory, Cincinnati, Ohio 45268, February 1990).

10.2. M. A. Gautier, E. S. Gladney, N. L. Koski, E. A. Jones, and B. T. O'Malley, "Quality Assurance for Health and Environmental Chemistry: 1990," Los Alamos National Laboratory report LA-12208-MS (1991).

10.3. "Hazardous and Mixed Waste," Administrative Requirement 10-3, in *Environment, Safety, and Health Manual*, Los Alamos National Laboratory Manual, Chapter 1 (most recent edition).

10.4. ASTM, *1992 Annual Book of ASTM Standards*, Vol 11.01, Specification D1193-91, Standard Specification for Reagent Water, pp. 45-47.

Revisions or additions to the procedure are marked (▒▒▒). Where a section heading is marked, the entire section has been revised.

TRACE ELEMENTS IN WATER (NO_2-N) — QC SAMPLE PREPARATION

Analyte: NO_2-N	**Method No.:** QCI220
Matrix: Water	**Spike Range:** 0.1-1.0 mg/L
Procedure: Flow Injection Colorimetry	**Accuracy and Precision:** 100% ± 5.8% RSD
Effective Date: 10/22/90	**Authors:** Nancy L. Koski Margaret A. Gautier

SAFETY NOTE: Before beginning this procedure, read all of the Material Safety Data Sheets for the chemicals listed in Sec. 5. Read Sec. 4.3 of the EM-9 Safety Manual for information on personal protective clothing and equipment. Read Sec. 9 of this procedure and Source Material 10.2 for proper waste disposal practices.

1. Principle of Method

1.1. Sodium nitrite is weighed into a volumetric flask.

1.2. Immediately before use, the weighed salt is dissolved in reagent water and the solution is used to spike reagent water for use as a QC sample.

1.3. QC samples are submitted for analysis with each analytical batch and are analyzed along with the unknown samples using the same analytical procedure.

2. Accuracy and Precision

2.1. The propagated error on QC preparation is based on the error of the standard and on the error associated with use of the pipette, balance, and volumetric flask. A relative standard deviation (RSD) of 5.8% at the 1σ level has been calculated for the error of the standard and for the spiking, weighing, and dilution process based on the following function:

$$D = \frac{M1 \times M2 \times M4}{M3 \times M5},$$

where D = calculated result,
M1 = standard error,
M2 = weighing error,
M3 = dilution error,

M4 = pipette error, and
M5 = second dilution error.

2.1.1. Calculate relative variance using the following equation.

$$R_M^2 = \frac{\sigma^2}{\overline{X}^2}$$

where R^2_M = relative variance,
M = $M_1 \ldots M_n$ (variable),
σ^2 = variance (std dev^2), and
$\overline{X}$ = mean value of each variable (M).

2.1.2. Calculate percent relative standard deviation using the following equation.

$$SD_T = \sqrt{R_{M1}^2 + R_{M2}^2 + R_{M3}^2 + R_{M4}^2 + R_{M5}^2} \times 100$$

where SD_T = relative standard deviation (% error),
R^2_{M1} = relative variance of standard,
R^2_{M2} = relative variance of balance,
R^2_{M3} = relative variance of volumetric flask,
R^2_{M4} = relative variance of pipette,
R^2_{M5} = relative variance of second volumetric flask, and
100 = factor to convert to percentage.

2.2. Analytical results from QC samples prepared during 1990 using this procedure and analyzed by flow injection colorimetry (N = 4) gave a mean recovery of 96% ± 15% at the 1σ level. The data are published in Source Material 10.1.

3. Collection and Storage of Samples

3.1. Aliquots of crystalline sodium nitrite to be diluted and used to prepare QC samples are stored at room temperature pending analysis.

3.2. A water solution of sodium nitrite cannot be stored as a QC sample because nitrite in solution is readily oxidized to nitrate by the oxygen in the air.

4. Apparatus

4.1. Balance: 100-g minimum capacity, 0.1-mg accuracy.

4.2. Flasks: 10- and 100-mL, volumetric.

4.3. Spatula.

4.4. Auto-pipette: 100-µL, Rainin or equivalent.

4.5. Pipette tips: disposable.

4.6. Labels printed with QC sample numbers.

5. Reagents

5.1. Sodium nitrite (analytical reagent-grade, crystalline).

5.2. Water. In this procedure, water referred to as "reagent water" is understood to mean reagent water conforming to ASTM Type I, II, or III and free of interferences with the analytical method.

6. Calibration and Standards

6.1. Dissolve 10-100 mg of analytical-grade crystalline sodium nitrite in 10 mL of reagent water immediately before use.

6.2. Spike 50 µL of the sodium nitrite solution into 100 mL of reagent water to prepare the QC sample.

7. Procedure

7.1. Prepare QC samples to equal at least 10% of the total number of samples to be analyzed.

7.2. Accurately weigh between 10 and 100 mg of sodium nitrite into a 10-mL volumetric flask.

7.3. Stopper the flask and label it with a QC sample number. Store the sample at room temperature pending final dilution by the analyst.

7.4. The sodium nitrite should be dissolved and diluted as close to time of analysis as possible to prevent loss of the QC sample through oxidation of nitrite to nitrate.

7.5. Place a label on the flask with instructions to the analyst for completion of the QC sample as described below.

7.5.1. Dissolve the sodium nitrite in reagent water in the 10-mL volumetric flask. Dilute the solution to volume with reagent water. Mix by inversion.

7.5.2. Place approximately 90 mL of reagent water in a 100-mL volumetric flask.

7.5.3. Spike 50 μL of the sodium nitrite solution from the 10-mL flask into the water in the 100-mL flask.

7.5.4 Dilute the QC sample in the 100-mL flask to volume with reagent water. Mix by inversion.

7.5.5. Analyze the QC sample immediately after preparation, using the same QC sample number that is on the 10-mL volumetric flask.

7.6. Calculate the concentration of the QC sample as the concentration after final dilution in the 100-mL flask by the analyst.

7.7. Record QC standard information, sample number, sample description, spike amount, concentration, uncertainty, and all calculations in the QC Laboratory notebook and enter them into the CVS and CVD databases on the VAX.

8. Calculations

8.1. Record the concentration of NO_2-N in the QC sample as mg/L.

8.2. Calculate spike concentrations as in the following example.

8.2.1. Atomic weights: Na = 23, N = 14, and O = 16. The ratio of the atomic weight of N in $NaNO_2$ to the molecular weight of $NaNO_2$ is 14:69.

8.2.2. If 55.8 mg of sodium nitrite is dissolved in 10 mL of reagent water, the NO_2-N concentration in the resulting stock solution will be 1.13 mg/mL.

$$\frac{(55.8 \text{ mg } NaNO_2)\ (14 \text{ mg N}/69 \text{ mg } NaNO_2)}{10 \text{ mL}} = 1.13 \text{ mg N/mL}$$

8.2.3. If 50 μL of the $NaNO_2$ stock solution with a NO_2-N concentration of 1.13 mg/mL is used to spike 100 mL of reagent water, the final concentration of NO_2-N in the QC sample will be 0.57 mg/L. Multiply the result by the RSD calculated in Step 2.1 to obtain the uncertainty.

$$\frac{(1.13 \text{ mg N/mL})\ (1 \text{ mL}/1000\ \mu\text{L})\ (50\ \mu\text{L})}{(100 \text{ mL})\ (1 \text{ L}/1000 \text{ mL})} = 0.57 \text{ mg/L}$$

9. Proper Waste Disposal Practices

9.1. Solid waste.

9.1.1. Solid waste contaminated with hazardous chemicals above the level of concern is not normally generated during the routine preparation of QC samples for analysis for inorganic contaminants.

9.1.2. If a solid waste is generated that may be contaminated at a level of concern, complete the appropriate paperwork on a case-by-case basis.

9.1.2.1. Complete a Waste Profile Request Form (WPRF) describing the solid waste and send to the Waste Management group for review.

9.1.2.2. If the Waste Management group determines that the solid waste is contaminated below the level of concern, dispose of the waste as ordinary laboratory trash.

9.1.2.3. If the Waste Management group determines that the solid waste is contaminated above the level of concern, request pickup of the contaminated waste as described in Sec. 9.3.

9.2. Liquid waste.

9.2.1. Accumulate liquid waste containing hazardous contaminants, such as solutions of trace metals, in a coated glass bottle in a secondary containment tray and keep it segregated from liquid waste contaminated with organic or radioactive substances or cyanide.

9.2.2. Label the bottle with a hazardous waste label and a label indicating its use for trace metal waste.

9.2.3. Open the bottle only for the period of time necessary to add waste to it.

9.2.4. When the bottle is full, it is capped and kept in the secondary containment tray pending pickup by the Waste Management group.

9.2.5. Label a new bottle for further use.

9.3. Waste pickup.

9.3.1. Request pickup by the Waste Management group of solid waste or a full bottle of liquid waste containing trace metals using the current Chemical Waste Disposal Request form (CWDR). The current Waste Profile Request Form (WPRF) which describes the waste is referenced on the CWDR.

9.3.2. The Waste Management group picks up the waste for disposal in accord with Laboratory policy.

10. Source Materials

10.1. M. A. Gautier, E. S. Gladney, N. L. Koski, E. A. Jones, and B. T. O'Malley, "Quality Assurance for Health and Environmental Chemistry: 1990," Los Alamos National Laboratory report LA-12208-MS (1991).

10.2. "Chemical, Hazardous, and Mixed Waste," Administrative Requirement 10-3, in *Environment, Safety, and Health Manual*, Los Alamos National Laboratory Manual, Chapter 1 (most recent edition).

10.3. ASTM *1992 Annual Book of ASTM Standards*, Vol. 11.01 Specification D1193-91, Standard Specification for Reagent Water, pp. 45-47.

Revisions or additions to the procedure are marked (▒). Where a section heading is marked, the entire section has been revised.

ORGANIC COMPOUNDS ON TUBES AND BADGES — QC SAMPLE PREPARATION

Analyte: Organic compounds	**Method No.:** QCO130
Matrix: Charcoal tubes and organic vapor monitor badges	**Spike Range:** charcoal tube: 30-300 μg/tube organic vapor monitor: 30-100 μg/sample NIOSH-PAT study: 0.2-2 mg/tube
Procedure: Gas chromatography with mass spectrometry (GCMS)	**Accuracy and Precision:** 100% ± 8.2% RSD
Effective Date: 03/05/84	**Author:** Nancy L. Koski Margaret A. Gautier

SAFETY NOTE: Before beginning this procedure, read all of the Material Safety Data Sheets for the chemicals listed in Sec. 5. Read Sec. 4.3 of the EM-9 Safety Manual for information on personal protective clothing and equipment. Read Sec. 9 of this procedure and Source Material 10.8 for proper waste disposal practices.

1. Principle of Method

1.1. Prepare a stock solution of organic compounds of interest from Table I in a solvent compatible with the analytical extraction method.

1.2. The solvent most commonly used is carbon disulfide. Methylene chloride is also used frequently.

1.3. Spike the stock directly into a charcoal tube or onto the filter paper inside an organic vapor monitor (OVM) badge.

2. Accuracy and Precision

2.1. The propagated error on QC preparation is based on the error of the standard and on the error associated with use of the microsyringe, balance, and volumetric flask. A relative standard deviation (RSD) of 8.2% has been calculated for the error of the standard and for spiking, weighing, and dilution, based on the following:

$$D = \frac{M1 \times M2 \times M4}{M3} ,$$

where D = calculated result,
M1 = standard error,
M2 = weighing error,
M3 = dilution error, and
M4 = spiking error.

2.1.1. Calculate relative variance using the following equation.

$$R_M^2 = \frac{\sigma^2}{\overline{X}^2} ,$$

where R^2_M = relative variance,
M = $M_1 \ldots M_n$ (variable),
σ^2 = variance (std dev^2), and
$\overline{X}$ = mean value of each variable (M).

2.1.2. Calculate percent relative standard deviation using the following equation.

$$S_{D_T} = \sqrt{R^2_{M1} + R^2_{M2} \times R^2_{M3} \times R^2_{M4}} \times 100 ,$$

where SD_T = relative standard deviation (% error),
R^2_{M1} = relative variance of standard,
R^2_{M2} = relative variance of balance,
R^2_{M3} = relative variance of volumetric flask,
R^2_{M4} = relative variance of microsyringe, and
100 = factor to convert to percentage.

2.2. Analysis by GCMS of QC samples prepared between 1984 and 1989 using this procedure are tabulated below. The data are published in Source Materials 10.1 to 10.7.

CHARCOAL TUBE AND BADGE SPIKE RECOVERY DATA

Compound	Year	Mean ± SD (%)	(N)
Benzene	1984	106 ± 2	4
	1985	133 ± 1	3
	1986	86 ± 3	3
	1987	61 ± 8	3
	1988	83 ± 6	4
	1989	118 ± 4	3
Carbon tetrachloride	1984	98 ± 9	4
	1985	103 ± 4	3
	1986	97 ± 2	5
	1987	110 ± 11	7
	1988	100 ± 6	8
	1989	90 ± 12	12
Cellosolve acetate	1986	95 ± 5	3
	1987	102 ± 4	3
	1988	102 ± 2	4
Chloroform	1984	116 ± 9	8
	1985	101 ± 4	3
	1986	95 ± 3	3
	1987	88 ± 5	4
	1988	99 ± 12	4
	1989	109 ± 2	4
1,2-Dichloroethane	1984	91 ± 12	4
	1985	99 ± 3	6
	1986	130	2
	1987	95 ± 5	7
	1988	99 ± 2	7
	1989	94 ± 6	11
p-Dioxane	1985	94 ± 4	6
	1986	101 ± 5	3
	1988	100 ± 1	4
Methyl chloroform	1984	106 ± 7	8
Methyl ethyl ketone	1984	93 ± 8	3
Trichloroethane	1989	89 ± 4	4

CHARCOAL TUBE AND BADGE SPIKE RECOVERY DATA (cont)			
Compound	Year	Mean ± SD (%)	(N)
Trichloroethylene	1984	90 ± 8	4
	1985	102 ± 4	3
	1986	106	2
	1987	94 ± 6	3
	1988	100 ± 1	4
	1989	90 ± 2	4
Toluene	1984	101 ± 1	3
	1985	105 ± 2	3
	1986	94 ± 6	3
	1987	98 ± 6	8
	1988	86 ± 1	4
	1989	96 ± 3	3
o-Xylene	1984	101 ± 1	3
	1985	103 ± 6	9
	1986	95 ± 5	6
	1987	101 ± 13	7
	1988	89 ± 4	8
	1989	96 ± 4	4

3. Collection and Storage of Samples

3.1. Charcoal tubes are received heat-sealed at both ends with plastic caps to seal the ends after the tubes are opened. Organic vapor monitor badges (OVM) are received in sealed cans. The OVM badges include a closure cap with center and side ports, a charcoal sorbent disc, and a spacer plate above the disc.

3.2. Spiked tubes and badges are stored in a freezer pending analysis.

4. Apparatus

4.1. Volumetric flasks: 1- and 2-mL, class A, glass.

4.2. Pipettes: Pasteur, disposable, glass.

4.3. Pipette bulb: rubber, to fit Pasteur pipette.

4.4. Syringes: gas-tight, 10-, 25-, 50-, and 100-μL.

4.5. Microspatulas.

4.6. Sorbent sample tubes: charcoal, 100-mg primary bed, 50-mg backup bed.

4.7. Sorbent sample tubes: charcoal, 400-mg primary bed, 200-mg backup bed.

4.8. Organic vapor monitors: 3M OVM #3500 or equivalent. 3M, St. Paul, MN 55144-1000.

4.9. Paper filters: 25 - 28 mm diameter, Whatman #2, #41, #42, or equivalent.

4.10. Teflon tape.

4.11. Pliers: to break off the tip of the charcoal sample tube.

4.12. Analytical balance: 100-g minimum capacity, 0.1-mg accuracy.

4.13. Laboratory oven: capable of sustaining 100-150°C.

4.14. Labels printed with QC sample numbers.

5. Reagents

5.1. Carbon disulfide (reagent-grade).

5.2. Methylene chloride (reagent-grade).

5.3. 1,2-dichloroethane (reagent-grade).

6. Calibration and Standards

6.1. Prepare a stock solution of neat, standard-grade analytes, chosen primarily from the list of target compounds in Table I. Use Chem Service or equivalent chemicals (Chem Service, Inc., Box 3108, West Chester, PA 19381). Add solid analytes first, then liquid analytes after the addition of solvent.

6.2. Solvent choice for the stock solution matrix depends on the analytes included in the solution and on the analytical extraction method.

6.2.1. Carbon disulfide is the solvent most commonly used.

6.2.2. A stock solution containing carbon disulfide or methylene chloride as an analyte should use 1,2-dichloroethane as a solvent because methylene chloride and carbon disulfide co-elute.

6.2.3. A stock solution containing ethanol as an analyte should use methylene chloride as a solvent because ethanol forms a colloidal suspension in carbon disulfide.

6.3. The stock solution may be prepared in a 1.0- or 2.0-mL volumetric flask. A solution containing multiple analytes is more conveniently prepared in a 2.0-mL volumetric flask.

6.3.1. The usual concentration range of a stock solution is between 5 and 20 mg/mL. A more concentrated stock solution may be required to prepare a QC sample with a higher spike range. The concentration of the stock solution should be such that a spike volume equal to or less than 15 μL onto a small charcoal tube or OVM badge and equal to or less than 30 μL onto a large charcoal tube will bring all analytes into the desired spike range.

6.3.2. Charcoal-tube QC samples prepared to accompany National Institute for Occupational Safety and Health Proficiency Analytical Testing (NIOSH PAT) intercomparison samples are spiked in the range 0.2-2 mg/tube. A stock solution with analytes in the concentration range of 15-150 mg/mL will reach the desired spike range on a small charcoal tube QC sample when a spike volume of 15 μL or less is used.

6.3.3. Add a solid analyte to a clean, tared 1.0- or 2.0-mL volumetric flask to reach the desired stock concentration range. Record the mass of the analyte added and tare the balance. Repeat for each solid analyte. See Step 8.1.

6.3.4. Add the solvent chosen for the stock solution matrix to the volumetric flask until it reaches approximately halfway to the graduation mark. Stopper the flask.

6.3.5. Swirl the flask to dissolve the solid analytes.

6.3.6. Calculate the volumes of the liquid analytes needed to reach the desired stock concentration range. See Step 8.2 to 8.3.

6.3.7. Place the stoppered flask on the analytical balance and tare the balance.

6.3.8. Add a liquid analyte, from a syringe just above the surface of the solvent, to reach the desired stock concentration range. Restopper the flask and record the mass and volume of the analyte added. Tare the balance. Repeat for each liquid analyte added.

6.3.9. Dilute the solution to volume with the solvent chosen in Step 6.3.4.

6.3.10. Mix by gently inverting three times.

NOTE: Vigorous shaking will cause the loss of volatile analytes.

6.3.11. Wrap Teflon tape around the stopper of the volumetric flask.

6.3.12. Label the flask with information identifying the stock solution and with the expiration date.

6.3.13. The stock solution is stable for approximately 2 weeks when stored at -20°C.

6.4. For QC samples containing multiple analytes, more than one stock solution may be prepared using different analytes. The combination of analytes in the QC sample may be varied by spiking with more than one stock solution.

7. Procedure

7.1. Cleaning glassware.

7.1.1. Wash volumetric flasks with detergent and rinse with hot tap water and then with methanol.

7.1.2. Store the glassware in a laboratory oven maintained at 100-150°C to minimize contamination.

7.2. Cleaning syringes.

7.2.1. Dedicate a group of syringes for use only with semivolatile compounds and a second group of syringes for use only with volatile compounds.

7.2.2. Fill the syringe through the needle with methanol. Discard the methanol into the waste container. Repeat for a total of 5-10 times.

7.2.3. Dry the syringe by pulling a vacuum on it for at least 10 min.

7.3. The spike range for volatile organic compounds on charcoal tubes or on OVM badges varies with the analyte spiked.

7.3.1. For most analytes the spike range is 30-100 μg/tube or 30-100 μg/badge.

7.3.2. For analytes with a shorter retention time than carbon disulfide during gas chromatography, the spike range is 100-300 μg/tube or 100-300 μg/badge. Acetone, methanol, ethanol, 2-propanol, and Freon are included in this category.

7.3.3. The spike range for analytes in QC samples prepared to accompany NIOSH PAT samples is 0.2-2 mg/tube.

7.4. Preparation of QC samples for volatile organic compounds on charcoal tubes.

7.4.1. Prepare QC samples to equal at least 10% of the total number of samples to be analyzed.

7.4.2. Use the same size charcoal tube for the QC samples as was used to collect the samples to be analyzed.

7.4.3. The total spike volume onto small charcoal tubes should be equal to or less than 15 μL and onto large charcoal tubes should be equal to or less than 30 μL to avoid saturation of the primary charcoal bed.

7.4.4. Remove the stock solution from the freezer and allow it to come to room temperature. Do not allow the stock solution to sit at room temperature for longer than 1 h before spiking the QC sample.

7.4.5. Break off the tip of the entrance end of the charcoal tube using pliers. The entrance end is the end with the glass wool plug over the primary charcoal bed and an air space between the end of the tube and the charcoal bed.

7.4.6. Using a syringe, spike a volume of stock solution onto the primary charcoal bed to reach the desired spike range. Spike the solution beginning in the middle of the primary charcoal bed and drawing the syringe needle toward the glass wool plug at the top of bed as the spiking is completed. The entire volume of spike solution should be on the charcoal bed and not on the walls of the sample tube.

7.4.7. Cap both ends of the sample tube with the plastic tube caps and wrap Teflon tape around the broken end.

7.4.8. Label the tube with a QC sample number.

7.4.9. Return the stock solution to the freezer.

7.4.10. Store the QC samples in a freezer pending analysis.

7.4.11. Record QC standard information, sample number, sample description, spike amount, concentration, uncertainty, and all calculations in the QC Laboratory notebook and enter them into the CVS and CVD databases on the VAX.

7.5. Preparation of QC samples for volatile organic compounds on organic vapor monitor (OVM) badges.

7.5.1. Prepare QC samples to equal at least 10% of the total number of samples to be analyzed.

7.5.2. The total spike volume onto an OVM badge should be equal or less than 15 μL.

7.5.3. Remove the stock solution from the freezer and allow it to come to room temperature. Do not allow the stock solution to sit at room temperature for longer than 1 h before spiking the QC sample.

7.5.4. Remove the OVM badge from the can in which it was received.

7.5.5. Remove and discard the plastic ring and white film from the badge.

7.5.6. Place a 25-28-mm paper filter onto the spacer plate above the charcoal disc. Snap the closure cap onto the badge. Close the side port.

7.5.7. Using a syringe, spike a volume of the stock onto the filter paper through the center port to reach the desired spike range. Close the center port.

7.5.8. Return the badge to the can in which it was received and label the can with a QC number.

7.5.9. The badge should be kept in the refrigerator for at least 16-24 h before analysis to achieve complete transfer of the organic compounds from the filter paper onto the charcoal sorbent or in a freezer for longer periods of time pending analysis.

7.5.10. Return the stock solution to the freezer.

7.5.11. Record QC standard information, sample number, sample description, spike amount, concentration, uncertainty, and all calculations in the QC Laboratory notebook and enter them into the CVS and CVD databases on the VAX.

8. Calculations

8.1. Solid analytes used in the stock solution are measured directly by mass.

8.2. Calculate the volume of neat liquid analyte to add to the stock solution as in the following example.

8.2.1. Read the density of the neat liquid analyte from Table I. The density of chloroform is 1.492 mg/μL.

8.2.2. The desired spike range for 1 mL of stock is 5-20 mg of neat analyte.

8.2.3. Divide the weight spike range by the density of the neat analyte to determine the desired volume spike range of neat analyte to use in 1 mL of stock solution.

$$\frac{5\ \text{mg}}{1.492\ \text{mg}/\mu\text{L}}\ \text{to}\ \frac{20\ \text{mg}}{1.492\ \text{mg}/\mu\text{L}} = 3.4\ \text{to}\ 13.4\ \mu\text{L}$$

For chloroform, 3.4-13.4 μL of the neat analyte should be diluted to 1 mL to reach the desired concentration range of 5-20 mg/mL in the stock solution.

8.3. Calculate the concentration of each neat analyte in the stock solution as in the following example.

8.3.1. If 5 μL of chloroform, weighing 7.5 mg, is diluted to 1 mL of stock solution, the concentration of chloroform in the stock solution is 7.5 mg/mL.

$$\frac{7.5\ \text{mg}}{1\ \text{mL}} = 7.5\ \text{mg/mL}$$

8.4. Calculate the concentration of each analyte on a charcoal tube QC sample as in the following example.

8.4.1. If 6 μL of a stock solution containing 7.5 mg/mL of chloroform is spiked onto a charcoal tube, the concentration of chloroform in the QC sample is 45 μg/sample. Multiply the result by the RSD calculated in Step 2.1 to obtain the uncertainty.

$$\frac{(7.5\ \text{mg/mL})\left(\frac{1\ \text{mL}}{1000\ \mu\text{L}}\right)\left(\frac{1000\ \mu\text{g}}{1\ \text{mg}}\right)(6\ \mu\text{L})}{\text{sample}} = 45\ \mu\text{g/sample}$$

8.5. Calculate the concentration of each analyte on an OVM badge QC sample as in the following example.

8.5.1. If 9 μL of a stock solution containing 7.5 mg/mL of chloroform is spiked onto an OVM badge, the concentration of chloroform in the QC sample is 67.5 μg/sample. Multiply the result by the RSD calculated in Step 2.1 to obtain the uncertainty.

$$\frac{(7.5\ \text{mg/mL})\left(\frac{1\ \text{mL}}{1000\ \mu\text{L}}\right)\left(\frac{1000\ \mu\text{g}}{1\ \text{mg}}\right)(9\ \mu\text{L})}{\text{sample}} = 67.5\ \mu\text{g/sample}$$

8.6. Record the analyte concentration on a charcoal tube QC sample or an OVM badge as μg/sample or mg/sample.

9. Proper Waste Disposal Practices

9.1. Solid waste.

9.1.1. Solid waste, such as paper wipes, glass or plastic pipettes, empty vials, and incorrectly spiked QC samples contaminated with organic compounds, is accumulated in a covered metal can lined with a plastic bag and is kept segregated from PCB-contaminated solid waste and solid waste that is not contaminated with organic compounds.

9.1.2. The can is labeled with a hazardous waste label and a label indicating its use for waste contaminated with organic compounds.

9.1.3. The can is opened only for the period of time necessary to add waste.

9.1.4. When the plastic bag is full, it is sealed with tape, removed from the can, identified as waste contaminated with organic compounds, and placed in a functioning chemical exhaust hood or in a closed secondary container pending pickup by the Waste Management Group.

9.1.5. A new plastic bag is put into the waste can for continued use.

9.2. Liquid waste.

9.2.1. Liquid waste containing organic compounds, such as rinses from syringes, excess QC samples, and incorrectly spiked QC samples, is accumulated in a covered metal can in a secondary containment tray.

9.2.1.1. Liquid waste containing organic compounds but no PCBs is kept segregated from PCB-contaminated liquid waste.

9.2.1.2. The can is labeled with a hazardous waste label and a label indicating its use for waste containing organic compounds.

9.2.1.3. The can is labeled with a hazardous waste label and a label indicating its use for waste containing organic compounds.

9.2.1.4. When the can is full, it is capped and kept in the secondary containment tray pending pickup by the Waste Management Group.

9.2.1.5. A new can is labeled for future use.

9.2.1. Two-mL vials containing out-of-date spiking solutions of organic compounds are accumulated in a glass jar in a secondary containment tray.

9.2.2.1. Solutions that are not contaminated with PCBs are kept segregated from those that are PCB-contaminated.

9.2.2.2. The jar is labeled with a hazardous waste label and a label indicating its use for waste containing organic compounds.

9.2.2.3. The jar is opened only for the period of time necessary to add vials.

9.2.2.4 When the jar is full, it is capped and kept in the secondary containment tray pending pickup by the Waste Management Group.

9.2.2.5. A new jar is labeled for future use.

9.3. Waste pickup.

9.3.1. Pickup by the Waste Management Group of a full bag, can, or jar of waste contaminated with organic compounds is requested using the current Chemical Waste Disposal Request form. The current Waste Profile Request Form (WRPF) that describes the waste is referenced on the Chemical Waste Disposal Request.

9.3.2. The Waste Management Group picks up the waste for disposal according to Laboratory policy.

10. Source Materials

10.1. M. A. Gautier, E. S. Gladney, and D. R. Perrin, "Quality Assurance for Health and Environmental Chemistry: 1984," Los Alamos National Laboratory report LA-10508-MS (1985).

10.2. M. A. Gautier, E. S. Gladney, and B. T. O'Malley, "Quality Assurance for Health and Environmental Chemistry: 1985," Los Alamos National Laboratory report LA-10813-MS (1986).

10.3. M. A. Gautier, E. S. Gladney, W. D. Moss, M. B. Phillips, and B. T. O'Malley, "Quality Assurance for Health and Environmental Chemistry: 1986," Los Alamos National Laboratory report LA-11114-MS (1987).

10.4. M. A. Gautier, E. S. Gladney, M. B. Phillips, and B. T. O'Malley, "Quality Assurance for Health and Environmental Chemistry: 1987," Los Alamos National Laboratory report LA-11454-MS (1988).

10.5. M. A. Gautier, E. S. Gladney, M. B. Phillips, and B. T. O'Malley, "Quality Assurance for Health and Environmental Chemistry: 1988," Los Alamos National Laboratory report LA-11637-MS (1989).

10.6. M. A. Gautier, E. S. Gladney, N. L. Koski, M. B. Phillips, E. A. Jones, and B. T. O'Malley, "Quality Assurance for Health and Environmental Chemistry: 1989," Los Alamos National Laboratory report LA-11995-MS (1990).

10.7. M. A. Gautier, E. S. Gladney, N. L. Koski, E. A. Jones, and B. T. O'Malley, "Quality Assurance for Health and Environmental Chemistry: 1990," Los Alamos National Laboratory report LA-12208-MS (1991).

10.8. "Chemical, Hazardous, and Mixed Waste," Administrative Requirement 10-3, in *Environment, Safety, and Health Manual*, Los Alamos National Laboratory Manual, Chapter 1 (most recent edition).

TABLE I. ORGANIC COMPOUNDS

Compound	CAS Number	Density of liquids (mg/μL)
acetone	67641	0.791
benzene	71432	0.874
bromobenzene	108861	1.491
bromochloromethane	74975	1.991
bromodichloromethane	75274	1.980
bromoform	75252	2.894
bromomethane	74839	0.838
2-butanone (MEK)	78933	0.805
n-butylbenzene	104518	0.860
sec-butylbenzene	135988	0.863
tert-butylbenzene	98066	0.867
carbon disulfide	75150	1.266
carbon tetrachloride	56235	1.594
chlorobenzene	108907	1.107
chlorodibromomethane	124481	2.451
chloroethane	75003	0.891
chloroform	67663	1.492
1-chlorohexane	544105	0.879
2-chlorotoluene	95498	1.083
4-chlorotoluene	106434	1.070
1,2-dibromo-3-chloropropane	96128	2.093
1,2-dibromoethane	106934	2.180
dibromomethane	74953	2.477
1,2-dichlorobenzene	95501	1.306
1,3-dichlorobenzene	541731	1.288
1,4-dichlorobenzene	106467	1.241
1,1-dichloroethane	75343	1.176
1,2-dichloroethane	107062	1.256
1,1-dichloroethene	75354	1.213
cis-1,2-dichloroethene	156592	1.284
trans-1,2-dichloroethene	156605	1.257
1,2-dichloropropane	78875	1.156
1,3-dichloropropane	142289	1.190
2,2-dichloropropane	594207	1.082
1,1-dichloropropene	563586	1.169
cis-1,3-dichloropropene	10061015	1.224
trans-1,3-dichloropropene	10061026	1.224
ethylbenzene	100414	0.867
hexachlorobutadiene	87683	1.665

TABLE I. ORGANIC COMPOUNDS (cont)

Compound	CAS Number	Density of liquids (mg/μL)
2-hexanone	591786	0.812
isopropylbenzene	98828	0.864
4-isopropyltoluene	99876	0.860
methylene chloride	75092	1.325
4-methyl-2-pentanone (MIK)	108101	0.800
naphthalene	91203	solid
n-propylbenzene	103651	0.862
styrene	100425	0.909
1,1,1,2-tetrachloroethane	630206	1.598
1,1,2,2,-tetrachloroethane	79345	1.586
tetrachloroethene	127184	1.623
toluene	108883	0.867
1,2,3-trichlorobenzene	87616	solid
1,2,4-trichlorobenzene	120821	1.454
1,1,1-trichloroethane	71556	1.338
1,1,2-trichloroethane	79005	1.435
trichloroethene	79016	1.464
trichlorofluoromethane	75694	1.494
1,2,3-trichloropropane	96184	1.387
1,2,4-trimethylbenzene	95636	0.889
1,3,5-trimethylbenzene	108678	0.864
vinyl acetate	108054	0.934
o-xylene	95476	0.870
mixed xylenes (total)	1330207	0.860

POLYCHLORINATED BIPHENYLS IN OIL — QC SAMPLE PREPARATION

Analyte: Polychlorinated biphenyls (PCBs)	**Method No.:** QCO170
Matrix: Oil	**Spike Range:** 10-500 μg/g oil
Procedure: Analysis by gas chromatography with electron-capture detection (GCECD)	**Accuracy and Precision:** EPA standards - 100% ± 10.0% EM-9 standards - 100% ± 1.5%
Effective Date: 09/15/86	**Authors:** Nancy L. Koski Margaret A. Gautier

SAFETY NOTE: Before beginning this procedure, read all of the Material Safety Data Sheets for the chemicals listed in Sec. 5. Read Sec. 4.3 of the EM-9 Safety Manual for information on personal protective clothing and equipment. Read Sec. 9 of this procedure and Source Materials 10.4 to 10.5 for proper waste disposal practices.

1. Principle of Method

1.1. Prepare stock solutions of Aroclor 1242, 1254, and 1260 in hexane, or obtain Environmental Protection Agency (EPA) Aroclor 1242, 1254, and 1260 standards. Refer to Table I for Aroclors and associated CAS numbers.

TABLE I

Compound	CAS Number
Aroclor 1242	53469219
Aroclor 1254	11097691
Aroclor 1260	11096825
Total PCBs	1336363

1.2. Spike the stock solution into a blank oil sample.

2. Accuracy and Precision

2.1. The propagated error on QC preparation is based on the error of the standard and on the error associated with the use of the microsyringe and of the balance. A relative standard deviation (RSD) of 10% for EPA standards and 1.5% for in-house standards has been calculated for the error of the standard and for spiking and weighing based on the following:

2.1.1. EPA standard.

$$D = \frac{M1 \times M2}{M3} ,$$

where D = calculated result,
M1 = standard error,
M2 = spiking error, and
M3 = weighing error.

2.1.1.1. Calculate relative variance using the following equation.

$$R_M^2 = \frac{\sigma^2}{\overline{X}^2} ,$$

where R^2_M = relative variance,
M = $M_1 \ldots M_n$ (variable),
σ^2 = variance (std dev^2), and
$\overline{X}$ = mean value of each variable (M).

2.1.1.2. Calculate percent relative standard deviation using the following equation.

$$SD_T = \sqrt{R_{M1}^2 + R_{M2}^2 + R_{M3}^2} \times 100 ,$$

where SD_T = relative standard deviation (% error),
R^2_{M1} = relative variance of standard,
R^2_{M2} = relative variance of microsyringe,
R^2_{M3} = relative variance of balance, and
100 = factor to convert to percentage.

2.1.2. In-house standard.

$$U = \frac{M1 \times M2 \times M4}{M3 \times M5} ,$$

where U = uncertainty,
M1 = standard error,
M2 = weighing error,

M3 = dilution error,
M4 = second weighing error, and
M5 = spiking error.

2.1.2.1. Calculate relative variance using the following equation.

$$R_M^2 = \frac{\sigma^2}{\overline{X}^2} ,$$

where R^2_M = relative variance,
M = $M_1 \ldots M_n$ (variable),
σ^2 = variance (std dev^2), and
$\overline{X}$ = mean value of each variable.

2.1.2.2. Calculate percent relative standard deviation using the following equation.

$$S_{D_T} = \sqrt{R_{M1}^2 + R_{M2}^2 + R_{M3}^2 + R_{M4}^2 + R_{M5}^2} \times 100 ,$$

where SD_T = relative standard deviation (% error),
R^2_{M1} = relative variance of standard,
R^2_{M2} = relative variance of balance,
R^2_{M3} = relative variance of volumetric flask,
R^2_{M4} = relative variance of second balance,
R^2_{M5} = relative variance of microsyringe, and
100 = factor to convert to percentage.

2.2. Analytical results from QC samples prepared between 1990 and 1991 using this procedure and analyzed by gas chromatography with electron-capture detection are tabulated below. The data are published in Source Materials 10.1 to 10.3.

PCB IN OIL SPIKE RECOVERY DATA						
Compound	1990 Mean ± SD (%)		N	1991 Mean ± SD (%)		N
			Water			
Aroclor 1254	—			84 ± 34		(6)
Aroclor 1260	94		(1)	—		
Total Aroclor	94		(1)	84 ± 34		(6)
			Soil			
Aroclor 1242	106 ± 36		(19)	90 ± 21		(13)
Aroclor 1254	72		(2)	74 ± 28		(7)
Aroclor 1260	94 ± 19		(27)	111 ± 29		(16)
Total Aroclor	98 ± 27		(48)	96 ± 29		(36)
			Oil			
Aroclor 1242	96 ± 19		(56)	112 ± 20		(49)
Aroclor 1260	79 ± 14		(88)	96 ± 23		(78)
Total Aroclor	86 ± 18		(143)	102 ± 23		(127)

3. Collection and Storage of Samples

3.1. Spiked QC samples are stored at room temperature pending analysis. Samples prepared in 1986 and analyzed through 1991 have shown no decrease in analyte recovery.

4. Apparatus

4.1. Volumetric flasks: 5-mL, class A, glass.

4.2. Gas-tight syringes: 50-, 250-, 500-, and 2500 μL.

4.3. Bottles: 2- and 8-oz, glass with Teflon-lined lids.

4.4. Vials: 1.5-mL glass.

4.5. Caps: open-top to fit 1.5-mL vials.

4.6. Septa: Teflon/silicone discs to fit open-top caps.

4.7. Teflon tape.

4.8. Pipettes: Pasteur, disposable glass.

4.9. Pipette bulb: rubber, to fit Pasteur pipette.

4.10. Stirring rod: glass, 3- to 4-mm diameter.

4.11. Autosampler vials with Teflon-lined septa and crimp tops: 11- x 30-mm vials, and 11-mm silicone liner with Teflon face.

4.12. Portable crimper for sealing caps on autosampler vials.

4.13. Analytical balance: 100-g minimum capacity, 0.1-mg accuracy.

4.14. Analytical balance: 400-g minimum capacity, 1-mg accuracy.

4.15. Ultrasonic mixer.

4.16. Labels printed with QC sample numbers.

5. Reagents

5.1. Hexane (analytical-grade).

5.2. Blank vacuum pump oil. Any oil selected should be checked for interferences with the specific Aroclor chromatographic patterns.

6. Calibration and Standards

6.1. EPA Aroclor standards in isooctane or methanol are available in concentrations between 500 and 3000 μg/mL.

6.2. After opening the heat-sealed ampule containing an Aroclor standard, transfer the contents into a vial with a screw cap with Teflon/silicone septum. Wrap the cap with Teflon tape. Remove the original label and affix it to the vial or transfer the standards information to a label on the vial.

6.3. Solutions of PCBs may be prepared from pure PCBs in concentrations of 50-60 mg/mL.

6.4. Preparation of in-house standards in hexane.

6.4.1. Tare a 5-mL volumetric flask on a balance accurate to 0.1 mg. Add approximately 250-300 mg of a pure PCB to the bottom of the flask using a glass Pasteur pipette or a glass stirring rod. Record the mass added.

6.4.2. Dissolve the PCB and dilute it to volume with hexane. Mix by inversion.

6.4.3. Prepare a separate standard solution for each PCB desired. Do not mix Aroclors.

6.4.4. The standard concentration will be 50-60 mg/mL. See Step 8.1.

6.4.5. Transfer the standard to vials fitted with Teflon septa and caps. Wrap Teflon tape over and around the caps.

6.4.6. Label the vials with information identifying the standard.

6.5. Store the stock standards in a freezer.

7. Procedure

7.1. Discard used, PCB-contaminated flasks, bottles, and pipettes in the PCB waste container.

7.2. Cleaning of syringes.

7.2.1. Dedicate a group of syringes for use only with PCBs.

7.2.2. Fill the syringe with methanol through the needle. Discard the methanol into a waste container. Repeat for a total of 5-10 times.

7.2.3. Dry the syringe by pulling a vacuum on it for at least 10 min.

7.3. QC samples may be prepared in larger or smaller quantities than described in this procedure adjusting apparatus size as necessary. Preparation of 200 g of a PCB-in-oil QC sample from an in-house standard, or of 10 g of a PCB-in-oil QC sample from an EPA standard is described in this procedure.

7.4. QC sample preparation using in-house Aroclor standards.

7.4.1. Remove a vial of the desired in-house Aroclor standard from the freezer and allow it to reach room temperature.

7.4.2. Tare a clean 8-oz glass bottle on a balance accurate to 1 mg or better.

7.4.3. Add approximately 200 g of blank vacuum pump oil to the bottle. Record the mass of oil added.

7.4.4. Spike an aliquot of an in-house Aroclor standard into the oil using a syringe to reach the desired spike range. See Step 8.3.

7.4.5. Cap the bottle with a Teflon lid and label it with information identifying the sample.

7.4.6. Return the vial containing the in-house Aroclor standard to the freezer.

7.4.7. Prepare several PCB-in-oil QC samples using different Aroclors in hexane and different spike volumes to cover the entire spike range.

7.4.8. Mix the PCB-in-oil QC samples for at least 8 h in an ultrasonic mixer.

7.4.9. Store the samples at room temperature.

7.5. QC sample preparation using EPA aroclor standards.

7.5.1. Choose an EPA Aroclor standard with a concentration between 500 and 3000 μg/mL to reach the desired concentration range in 10 g of oil.

7.5.2. Remove a vial of the chosen Aroclor standard from the freezer and allow it to reach room temperature.

7.5.3. Tare a clean 2-oz glass bottle on a balance accurate to 1 mg or better.

7.5.4. Add approximately 10 g of blank vacuum pump oil to the bottle. Record the mass of oil added.

7.5.5. Using a syringe, spike an aliquot of EPA aroclor standard into the oil to reach the desired spike range. See Step 8.4.

7.5.6. Cap the bottle with a Teflon lid and label it with information identifying the sample.

7.5.7. Return the vial containing the Aroclor standard to the freezer.

7.5.8. Prepare several PCB-in-oil QC samples using different EPA Aroclors and different spike volumes to cover the entire spike range.

7.5.9. Mix the PCB-in-oil QC samples for at least 8 h in an ultrasonic mixer.

7.5.10. Store the samples at room temperature.

7.6. Record QC standard information, sample number, sample description, spike amount, concentration, uncertainty, and all calculations in the QC Laboratory notebook and enter them into the CVS and CVD data bases on the VAX.

7.7. Prepare QC samples to equal at least 10% of the total number of samples to be analyzed.

7.7.1. Aliquot 1-2 mL of a PCB-in-oil QC sample into an autosampler vial and seal the vial with a crimp-top cap.

7.7.2. Label the vial with a QC sample number.

8. Calculations

8.1. Calculate the concentration of the in-house Aroclor standard prepared from pure PCBs as in the following example.

8.1.1. If 275.0 mg of pure PCB is diluted to 5.0 mL with hexane, the concentration of the PCB in the standard is 55 mg/mL.

$$\frac{275.0 \text{ mg}}{5.0 \text{ mL}} = 55 \text{ mg/mL}$$

8.2. Calculate spike concentrations from an in-house Aroclor standard as in the following example.

8.2.1. If 150 μL of a 55 mg/mL in-house Aroclor standard is spiked into 198.0 g of blank oil, the PCB concentration in the QC sample is 42 μg/g. Multiply the result by the RSD calculated in Step 2.1 to obtain the uncertainty.

$$\frac{(55 \text{ mg/mL}) \left(\frac{1 \text{ mL}}{1000 \ \mu\text{L}}\right) \left(\frac{1000 \ \mu\text{g}}{1 \text{ mg}}\right) (150 \ \mu\text{L})}{198.0 \text{ g}} = 42 \ \mu\text{g/g}$$

8.2.2. Record the Aroclor concentrations in the QC samples in μg/g.

8.3. Calculate spike concentrations from an EPA Aroclor standard as in the following example.

8.3.1. If 800 μL of a 3000 μg/mL EPA Aroclor standard is spiked into 10 g of blank oil, the PCB concentration in the QC sample is 240 μg/g. Multiply the result by the RSD calculated in Step 2.1 to obtain the uncertainty.

$$\frac{(3000 \ \mu\text{g/mL}) \left(\frac{1 \text{ mL}}{1000 \ \mu\text{L}}\right) (800 \ \mu\text{L})}{10 \text{ g}} = 240 \ \mu\text{g/g}$$

9. Proper Waste Disposal Practices

9.1. Solid Waste.

9.1.1. PCB-contaminated solid waste, such as paper wipes, glass or plastic pipettes, empty vials, and incorrectly spiked QC samples, is accumulated in a covered metal can lined with a plastic bag and is kept segregated from non-PCB-contaminated solid waste.

9.1.2. The can is labeled with a hazardous waste label and a label indicating its use for PCB-contaminated waste.

9.1.3. The can is opened only for the period of time necessary to add waste to it.

9.1.4. When the plastic bag is full, it is sealed with tape, removed from the can, identified as PCB-contaminated waste, and placed in a functioning chemical exhaust hood pending pickup by the Waste Management Group.

9.1.5. A new plastic bag is put into the waste can for continued use.

9.2. Liquid Waste.

9.2.1. PCB-contaminated liquid waste, such as rinses from PCB-contaminated syringes, PCB standards, and incorrectly spiked QC samples, is accumulated in a covered polyethylene bottle in a secondary containment tray and is kept segregated from non-PCB-contaminated liquid waste.

9.2.2. The bottle is labeled with a hazardous waste label and a label indicating its use for PCB-contaminated waste.

9.2.3. The bottle is opened only for the period of time necessary to add waste to it.

9.2.4. When the bottle is full, it is capped and kept in the secondary containment tray pending pickup by the Waste Management Group.

9.2.5. A new bottle is labeled for further use.

9.3. Waste Pickup

9.3.1. Pickup by the Waste Management Group of a full bag or bottle of PCB-contaminated waste is requested using the current Chemical Waste Disposal Request form. The current Waste Profile Request Form

(WPRF) that describes the waste is referenced on the Chemical Waste Disposal Request.

9.3.2. The Waste Management Group picks up the waste for disposal in accordance with Laboratory policy.

10. Source Materials

10.1. M. A. Gautier, E. S. Gladney, N. L. Koski, M. B. Phillips, E. A. Jones, and B. T. O'Malley, "Quality Assurance for Health and Environmental Chemistry: 1989," Los Alamos National Laboratory report LA-11995-MS (1990).

10.2. M. A. Gautier, E. S. Gladney, N. L. Koski, E. A. Jones, and B. T. O'Malley, "Quality Assurance for Health and Environmental Chemistry: 1990," Los Alamos National Laboratory report LA-12208-MS (1991).

10.3. M. A. Gautier, E. S. Gladney, N. L. Koski, E. A. Jones, and B. T. O'Malley, "Quality Assurance for Environmental Chemistry: 1991," Los Alamos National Laboratory report LA-12436-MS (1992).

10.4. "Chemical, Hazardous, and Mixed Waste," Administrative Requirement 10-3, in *Environment, Safety, and Health Manual*, Los Alamos National Laboratory Manual, Chapter 1 (most recent edition).

10.5. "Polychlorinated Biphenyls," Administrative Requirement 10-4, in *Environment, Safety, and Health Manual*, Los Alamos National Laboratory Manual, Chapter 1 (most recent edition).

POLYCHLORINATED BIPHENYLS ON SOIL — QC SAMPLE PREPARATION

Analyte: Polychlorinated biphenyls (PCBs)	**Method No.:** QCO190
Matrix: Soil	**Spike Range:** 10-30 μg/g
Procedure: Analysis by gas chromatography with electron-capture detection (GCECD)	**Accuracy and Precision:** EPA standards - 100% ± 10.0% EM-9 standards - 100% ± 1.8%
Effective Date: 05/17/88	**Authors:** Nancy L. Koski Margaret A. Gautier

SAFETY NOTE: Before beginning this procedure, read all of the Material Safety Data Sheets for the chemicals listed in Sec 5. Read Sec. 4.3 of the EM-9 Safety Manual for information on personal protective clothing and equipment. Read Sec. 9 of this procedure and Source Materials 10.4 to 10.5 for proper waste disposal practices.

1. Principle of Method

1.1. Prepare stock solutions of PCB 1242, 1254, and 1260 in hexane, or obtain Environmental Protection Agency (EPA) Aroclor 1242, 1254, and 1260 standards. Refer to Table I for Aroclors and associated CAS numbers.

TABLE I

Compound	CAS Number
Aroclor 1242	53469219
Aroclor 1254	11097691
Aroclor 1260	11096825
Total PCBs	1336363

1.2. Spike the Aroclor standard directly onto a soil sample.

2. Accuracy and Precision

2.1. The propagated error on QC preparation is based on the error of the standard and on the error associated with use of the microsyringe, volumetric flask, and balance. A relative standard deviation (RSD) of 10.0% for EPA standards and 1.8% for in-house standards has been calculated for the error of the standard and for the spiking and weighing process based on the following:

2.1.1. EPA standard.

$$D = \frac{M1 \times M2}{M3} ,$$

where D = calculated results,
M1 = standard error,
M2 = spiking error, and
M3 = weighing error.

2.1.1.1. Calculate relative variance using the following equation.

$$R_M^2 = \frac{\sigma^2}{\overline{X}^2} ,$$

where R^2_M = relative variance,
M = $M_1 \ldots M_n$ (variable),
σ^2 = variance (std dev^2), and
$\overline{X}$ = mean value of each variable (M).

2.1.1.2. Calculate percent relative standard deviation using the following equation.

$$S_{D_T} = \sqrt{R_{M1}^2 + R_{M2}^2 + R_{M3}^2} \times 100 ,$$

where S_{D_T} = relative standard deviation (% error),
R^2_{M1} = relative variance of standard,
R^2_{M2} = relative variance of microsyringe,
R^2_{M3} = relative variance of balance, and
100 = factor to convert to percentage.

2.1.2. In-house standard.

$$U = \frac{M1 \times M2 \times M4 \times M6}{M3 \times M5 \times M7} ,$$

where U = uncertainty,
M1 = standard error,
M2 = first weighing error,

M3 = first dilution error,
M4 = first spiking error,
M5 = second dilution error,
M6 = second spiking error, and
M7 = second weighing error.

2.1.2.1. Calculate relative variance using the following equation.

$$R_M^2 = \frac{\sigma^2}{\overline{X}^2} ,$$

where R^2_M = relative variance,
M = $M_1 \ldots M_n$ (variable),
σ^2 = variance (std dev^2), and
$\overline{X}$ = mean value of each variable (M).

2.1.2.2. Calculate percent relative standard deviation using the following equation.

$$S_{D_T} = \sqrt{R_{M1}^2 + R_{M2}^2 + R_{M3}^2 + R_{M4}^2 + R_{M5}^2 + R_{M6}^2 + R_{M7}^2} \times 100 ,$$

where S_{DT} = relative standard deviation (% error),
R^2_{M1} = relative variance of standard,
R^2_{M2} = relative variance of first balance,
R^2_{M3} = relative variance of first volumetric flask,
R^2_{M4} = relative variance of first microsyringe,
R^2_{M5} = relative variance of second volumetric flask,
R^2_{M6} = relative variance of second microsyringe,
R^2_{M7} = relative variance of second balance, and
100 = factor to convert to percentage.

2.2. Analyses by GCECD of QC samples prepared between 1990 and 1991 using this procedure and analyzed by gas chromatography with electron-capture detection are tabulated below. The data are published in Source Materials 10.1 to 10.3.

SUMMARY OF IN-HOUSE QC DATA FOR PCBs (% recovery ± std dev)						
	1990			1991		
	Mean	± SD	N	Mean	± SD	N
			Water			
Aroclor 1254	—			84	± 34	(6)
Aroclor 1260	94		(1)	—		
Total Aroclor	94		(1)	84	± 34	(6)
			Soil			
Aroclor 1242	106	± 36	(19)	90	± 20	(13)
Aroclor 1254	72		(2)	74	± 28	(7)
Aroclor 1260	94	± 19	(27)	111	± 29	(16)
Total Aroclor	98	± 27	(48)	96	± 29	(36)
			Bulk			
Aroclor 1242	96	± 19	(56)	112	± 20	(49)
Aroclor 1260	—			96	± 23	(78)
Total Aroclor	—			102	± 23	(127)

3. Collection and Storage of Samples

3.1. The blank soil matrix and the spiked samples should be stored in glass bottles fitted with Teflon lids. Avoid using plastic containers and lids because phthalates may leach from plastics and contaminate the soil.

3.2. Spiked QC samples are stored at room temperature pending analysis. A study performed in 1989 - 1990 showed no appreciable difference in analyte recovery between samples stored at room temperature and those stored in the refrigerator.

4. Apparatus

4.1. Syringes: gas-tight, 100-, 250-, and 1000-μL.

4.2. Bottles: 1/2-oz, glass with Teflon-lined lids.

4.3. Vials: 1.5-mL, glass.

4.4. Caps: open-top to fit vials.

4.5. Septa: Teflon/silicone discs to fit open-top caps

4.6. Teflon tape.

4.7. Analytical balance: 100-g minimum capacity, 0.1-mg accuracy.

4.8. Pipettes: Pasteur, disposable glass.

4.9. Pipette bulb: rubber, to fit Pasteur pipette.

4.10. Stirring rod: glass, 3- to 4-mm diameter.

4.11. Volumetric flasks: 5-mL, class A, glass.

4.12. Labels printed with QC sample numbers.

5. Reagents

5.1. Hexane (analytical-grade).

5.2. Soil. A clean, dry 8-g aliquot is required for each sample. A suitable soil does not contain the analyte of interest and presents few interferences to the analytical method.

5.3. Blank soil heated to nominally 100°C for 5 h and stored in glass is used as a sample matrix.

6. Calibration and Standards

6.1. EPA Aroclor standards in isooctane or methanol are available in PCB concentrations between 500 and 3000 μg/mL.

6.2. After opening the heat-sealed ampules containing Aroclor standards, transfer the contents into vials with screw caps with Teflon/silicone septa. Wrap the caps with Teflon tape. Remove the original label and affix it to the vial or transfer the standards information to a label on the new vial.

6.3. Solutions of PCBs may be prepared from pure PCBs in concentrations of 50-60 mg/mL.

6.4. Preparation of in-house standards in hexane.

6.4.1. Tare a 5-mL volumetric flask on an analytical balance. Add approximately 250-300 mg of a pure PCB to the bottom of the flask using a glass Pasteur pipette or a glass stirring rod. Record the mass added.

6.4.2. Dissolve the PCB and dilute it to volume with hexane. Mix by inversion.

6.4.3. Prepare a separate standard solution for each PCB desired. Do not mix Aroclors.

6.4.4. The standard concentration will be 50-60 mg/mL. See Step 8.1.

6.4.5. Transfer the standard to vials fitted with Teflon septa and caps. Wrap Teflon tape over and around the caps.

6.4.6. Label the vials with information identifying the standard.

6.5. Prepare a 1:10 dilution of the in-house standard in hexane.

6.5.1. Add 4 mL of hexane to a clean 5-mL volumetric flask.

6.5.2. Using a syringe, add 500 μL of 50-60 mg/mL Aroclor in-house standard to the hexane in the flask.

6.5.3. Dilute the standard to volume with hexane. Mix by inversion.

6.5.4. The concentration of the dilution will be 5000-6000 μg/mL. See Step 8.2.

6.5.5. Transfer the standard to vials fitted with Teflon septa and caps. Wrap Teflon tape over and around the caps.

6.5.6. Label the vials with information identifying the standard.

6.6. Store stock standards in a freezer.

7. Procedure

7.1. Discard used, PCB-contaminated flasks, bottles, and pipettes in the PCB waste container.

7.2. Cleaning of syringes.

7.2.1. Dedicate a group of syringes for use only with PCBs.

7.2.2. Fill the syringe with methanol through the needle. Discard the methanol into a waste container. Repeat for a total of 5-10 times

7.2.3. Dry the syringe by pulling a vacuum on it for at least 10 min.

7.3. Prepare QC samples to equal at least 10% of the total number of samples to be analyzed.

7.3.1. Accurately weigh 8 g of blank soil into a 1/2-oz glass bottle with a Teflon-lined lid. Record the mass of soil on the bottle with a felt-tipped pen for reference by the analyst.

7.3.2. Remove a vial containing a standard of the desired Aroclor in the concentration range 500-6000 μg/mL from the freezer and allow it to reach room temperature.

7.3.3. Spike a volume of the standard directly onto the soil to reach the desired spike range. Avoid wetting the bottle walls. The analyst will desorb the entire sample in the bottle. See Step 8.4.

7.3.4. Cap the bottle and label it with a QC sample number.

7.3.5. Return the vial containing the Aroclor standard to the freezer.

7.3.6. Record QC standard information, sample number, sample description, spike amount, concentration, uncertainty, and all calculations in the QC Laboratory notebook and enter them into the CVS and CVD data bases on the VAX.

7.3.7. Store the QC samples at room temperature pending analysis.

8. Calculations

8.1. Calculate the concentration of the concentrated PCB standard prepared from pure PCBs as in the following example.

8.1.1. If 275.0 mg of pure PCB is diluted to 5 mL with hexane, the concentration of the PCB in the standard is 55 mg/mL.

$$\frac{275.0 \text{ mg}}{5 \text{ mL}} = 55 \text{ mg/mL}$$

8.2. Calculate the concentration of the 1:10 dilution of the concentrated PCB standard as in the following example.

8.2.1. If 500 μL of a PCB standard whose concentration is 55 mg/mL is diluted to 5 mL with hexane, the concentration of the dilute standard is 5500 μg/mL.

$$\frac{(55\ \text{mg/mL})\left(\frac{1\ \text{mL}}{1000\ \mu\text{L}}\right)(500\ \mu\text{L})\left(\frac{1000\ \mu\text{g}}{1\ \text{mg}}\right)}{5\ \text{mL}} = 5500\ \mu\text{g/mL}$$

8.3. Calculate spike concentrations as in the following example.

8.3.1. If 50 μL of a 5500 μg/mL PCB standard is spiked onto 8.0005 g of soil, the PCB concentration in the QC sample is 34 μg/g. Multiply the result by the RSD calculated in Step 2.1 to obtain the uncertainty.

$$\frac{(5500\ \mu\text{g/mL})\left(\frac{1\ \text{mL}}{1000\ \mu\text{L}}\right)(50\ \mu\text{L})}{8.0005\ \text{g}} = 34\ \mu\text{g/g}$$

8.4. Record Aroclor concentrations in μg/g.

9. Proper Waste Disposal Practices

9.1. Solid Waste

9.1.1. PCB-contaminated solid waste, such as paper wipes, glass or plastic pipettes, empty vials, and incorrectly spiked QC samples, is accumulated in a covered metal can lined with a plastic bag and is kept segregated from non-PCB-contaminated solid waste.

9.1.2. The can is labeled with a hazardous waste label and a label indicating its use for PCB-contaminated waste.

9.1.3. The can is opened only for the period of time necessary to add waste to it.

9.1.4. When the plastic bag is full, it is sealed with tape, removed from the can, identified as PCB-contaminated waste, and placed in a functioning chemical exhaust hood pending pickup by the Waste Management Group.

9.1.5. A new plastic bag is put into the waste can for continued use.

9.2. Liquid Waste

9.2.1. PCB-contaminated liquid waste, such as rinses from PCB-contaminated syringes, PCB standards, and incorrectly spiked QC samples, is accumulated in a covered polyethylene bottle in a secondary

containment tray and is kept segregated from non-PCB-contaminated liquid waste.

9.2.2. The bottle is labeled with a hazardous waste label and a label indicating its use for PCB-contaminated waste.

9.2.3. The bottle is opened only for the period of time necessary to add waste to it.

9.2.4. When the bottle is full, it is capped and kept in the secondary containment tray pending pickup by the Waste Management Group.

9.2.5. A new bottle is labeled for further use.

9.3. Waste Pickup

9.3.1. Pickup by the Waste Management Group of a full bag or bottle of PCB-contaminated waste is requested using the current Chemical Waste Disposal Request form. The current Waste Profile Request Form (WPRF) that describes the waste is referenced on the Chemical Waste Disposal Request.

9.3.2. The Waste Management Group picks up the waste for disposal in accordance with Laboratory policy.

10. Source Materials

10.1. M. A. Gautier, E. S. Gladney, N. L. Koski, M. B. Phillips, E. A. Jones, and B. T. O'Malley, "Quality Assurance for Health and Environmental Chemistry: 1989," Los Alamos National Laboratory report LA-11995-MS (1990).

10.2. M. A. Gautier, E. S. Gladney, N. L. Koski, E. A. Jones, and B. T. O'Malley, "Quality Assurance for Health and Environmental Chemistry: 1990," Los Alamos National Laboratory report LA-12208-MS (1991).

10.3. M. A. Gautier, E. S. Gladney, N. L. Koski, E. A. Jones, and B. T. O'Malley, "Quality Assurance for Environmental Chemistry: 1991," Los Alamos National Laboratory report LA-12436-MS (1992).

10.4. "Chemical, Hazardous, and Mixed Waste," Administrative Requirement 10-3, in *Environment, Safety, and Health Manual*, Los Alamos National Laboratory Manual, Chapter 1 (most recent edition).

10.5. "Polychlorinated Biphenyls," Administrative Requirement 10-4, in *Environment, Safety, and Health Manual*, Los Alamos National Laboratory Manual, Chapter 1 (most recent edition).

POLYCHLORINATED BIPHENYLS ON SWIPES — QC SAMPLE PREPARATION

Analyte: Polychlorinated biphenyls (PCBs)	**Method No.:** QCO200
Matrix: Gauze Swipes	**Spike Range:** 5-20 μg/sample
Procedure: Analysis by gas chromatography with electron-capture detection (GCECD)	**Accuracy and Precision:** EPA standards - 100% ± 10.1% EM-9 standards - 100% ± 5.2%
Effective Date: 06/05/87	**Authors:** Nancy L. Koski Margaret A. Gautier

SAFETY NOTE: Before beginning this procedure, read all of the Material Safety Data Sheets for the chemicals listed in Sec. 5. Read Sec. 4.3 of the EM-9 Safety Manual for information on personal protective clothing and equipment. Read Sec. 9 of this procedure and Source Materials 10.4 to 10.5 for proper waste disposal practices.

1. Principle of Method

1.1. Prepare stock solutions of PCB 1242, 1254, and 1260 in hexane, or obtain Environmental Protection Agency (EPA) Aroclor 1242, 1254, and 1260 standards. Refer to Table I for Aroclors and associated CAS numbers.

TABLE I.

Compound	CAS Number
Aroclor 1242	53469219
Aroclor 1254	11097691
Aroclor 1260	11096825
Total PCBs	1336363

1.2. Spike an Aroclor standard onto a blank 2- × 2-in. gauze in a 1/2-oz bottle. The analyst will desorb in this container.

2. Accuracy and Precision

2.1. The propagated error on QC preparation is based on the error of the standard and on the error associated with use of the microsyringe, balance, and volumetric flasks. A relative standard deviation (RSD) of 10.1% for EPA standards and 2.0% for in-house standards has been calculated for the error of the standard and for weighing, dilution, and spiking, based on the following:

2.1.1. EPA standard.

$$D = M1 \times M2 \quad ,$$

where D = calculated result,
M1 = standard error, and
M2 = spiking error.

2.1.1.1. Calculate relative variance using the following equation.

$$R_M^2 = \frac{\sigma^2}{\overline{X}^2} \quad ,$$

where R^2_M = relative variance,
M = $M_1 \ldots M_n$ (variable),
σ^2 = variance (std dev^2), and
$\overline{X}$ = mean value of each variable (M).

2.1.1.2. Calculate percent relative standard deviation using the following equation.

$$S_{D_T} = \sqrt{R_{M1}^2 + R_{M2}^2} \times 100 \quad ,$$

where SD_T = relative standard deviation (% error),
R^2_{M1} = relative variance of standard,
R^2_{M2} = relative variance of microsyringe, and
100 = factor to convert to percentage.

2.1.2. In-house standard.

$$U = \frac{M1 \times M2 \times M4 \times M6}{M3 \times M5} ,$$

where U = uncertainty,
M1 = standard error,
M2 = weighing error
M3 = dilution error,
M4 = spiking error,
M5 = second dilution error, and
M6 = second spiking error.

2.1.2.1. Calculate relative variance using the following equation.

$$R_M^2 = \frac{\sigma^2}{\overline{X}^2} ,$$

where R^2_M = relative variance,
M = $M_1 \ldots . M_n$ (variable),
σ^2 = variance (std dev^2), and
$\overline{X}$ = mean value of each variable (M).

2.1.2.2. Calculate percent relative standard deviation using the following equation.

$$S_{D_T} = \sqrt{R^2_{M1} + R^2_{M2} + R^2_{M3} + R^2_{M4} + R^2_{M5} + R^2_{M6}} \times 100 ,$$

where SD_T = relative standard deviation (% error),
R^2_{M1} = relative variance of standard
R^2_{M2} = relative variance of balance,
R^2_{M3} = relative variance of volumetric flask,
R^2_{M4} = relative variance of microsyringe,
R^2_{M5} = relative variance of second volumetric flask,
R^2_{M6} = relative variance of second microsyringe, and
100 = factor to convert to percentage

2.2. Analyses by GCECD of QC samples prepared between 1990 and 1991 using this procedure are tabulated below. The data are published in Source Materials 10.1 to 10.3.

PCB ON SWIPES SPIKE RECOVERY DATA		
	1990	1991
	Mean ± SD N	Mean ± SD N
Aroclor 1242	96 ± 30 (28)	105 ± 34 (25)
Aroclor 1254	98 ± 2 (9)	104 ± 30 (26)
Aroclor 1260	95 ± 19 (48)	104 ± 27 (31)
Aroclor Total	96 ± 24 (85)	104 ± 30 (82)

3. Collection and Storage of Samples

3.1. Spiked QC samples are stored at room temperature pending analysis. A study performed between 1989 and 1990 showed no appreciable difference in analyte recovery between samples stored at room temperature and those stored in the refrigerator.

3.2. There is no holding time requirement for the analysis of PCB on swipe samples.

4. Apparatus

4.1. Syringes: gas-tight, 25-, 50- and 100-μL.

4.2. Bottles: 1/2-oz, glass with Teflon-lined screw-on lids.

4.3. Gauze pads: 2 × 2 in.

4.4. Vials: 1.5-mL, glass.

4.5. Caps: open-top, to fit 1.5-mL vials.

4.6. Septa: Teflon/silicone discs to fit open-top caps.

4.7. Teflon tape.

4.8. Analytical balance: 100-g minimum capacity, 0.1-mg accuracy.

4.9. Pipettes: Pasteur, disposable glass.

4.10. Pipette bulb: rubber, to fit Pasteur pipette.

4.11. Stirring rod: glass, 3- to 4-mm diameter.

4.12. Volumetric flasks: 5-mL, class A, glass.

4.13. Labels printed with QC sample numbers.

5. Reagents

5.1. Hexane (analytical-grade).

6. Calibration and Standards

6.1. EPA Aroclor standards in isooctane or methanol are available in concentrations between 500 and 3000 μg/mL.

6.2. After opening the heat-sealed ampul containing an Aroclor standard; transfer the contents into vials fitted with screw caps with Teflon septa. Wrap the caps with Teflon tape. Remove the original label and affix it to the vial or transfer the standard information to a label on the vial.

6.3. Solutions of PCBs may be prepared from pure PCBs in concentrations of 50-60 mg/mL.

6.4. Preparation of in-house standards in hexane.

6.4.1. Tare a 5-mL volumetric flask on an analytical balance. Add approximately 250-300 mg of a pure PCB to the flask using a glass Pasteur pipette or a glass stirring rod. Record the mass added.

6.4.2. Dissolve the PCB and dilute it to volume with hexane. Mix by inversion.

6.4.3. Prepare a separate standard solution for each PCB desired. Do not mix Aroclors.

6.4.4. The standard concentration will be 50-60 mg/mL. See Step 8.1.

6.4.5. Transfer the standard to vials fitted with Teflon septa and caps. Wrap Teflon tape over and around the caps.

6.4.6. Label the vials with information identifying the standard.

6.5. Prepare a 1:100 dilution of the in-house standard in hexane.

6.5.1. Add 4 mL of hexane to a clean 5-mL volumetric flask.

6.5.2. Using a syringe, add 50 μL of a 50-60 mg/mL Aroclor in-house standard prepared in Step 6.4 to the hexane in the flask.

6.5.3. Dilute the standard to volume with hexane. Mix by inversion.

6.5.4. The concentration of the dilution will be 0.5-0.6 mg/mL or 500-600 μg/mL. See Step 8.2.

6.5.5. Transfer the standard to vials fitted with Teflon septa and caps. Wrap Teflon tape over and around the caps.

6.5.6. Label the vials with information identifying the standard.

6.6. Store the stock standards in a freezer.

7. Procedure

7.1. Discard used, PCB-contaminated flasks, bottles, and pipettes in the PCB waste container.

7.2. Cleaning of syringes.

7.2.1. Dedicate a group of syringes for use only with PCBs.

7.2.2. Fill the syringe with methanol through the needle. Discard the methanol into a waste container. Repeat for a total of 5-10 times.

7.2.3. Dry the syringe by pulling a vacuum on it for at least 10 min.

7.3. Prepare QC samples to equal at least 10% of the total number of samples to be analyzed.

7.3.1. Remove a vial containing a standard of the desired Aroclor in the concentration range 500-1000 μg/mL from the freezer and allow it to reach room temperature.

7.3.2. Place a 2- x 2-in. blank gauze pad into a clean 1/2-oz bottle fitted with a Teflon-lined cap.

7.3.3. Spike an aliquot of PCB standard directly onto the gauze surface to reach the desired spike range. The analyst will desorb the sample in the bottle.

7.3.4. Cap the vial and label it with a QC number.

7.3.5. Return the vial containing the Aroclor standard to the freezer.

7.3.6. Store the QC samples at room temperature pending analysis.

7.4. Record QC standard information, sample number, sample description, spike amount, concentration, uncertainty, and all calculations in the QC Laboratory notebook and enter them into the CVS and CVD databases on the VAX.

8. Calculations

8.1. Calculate the concentration of the concentrated PCB standard prepared from pure PCBs as in the following example.

8.1.1. If 275.0 mg of pure PCB is diluted to 5 mL with hexane, the concentration of the PCB in the standard is 55 mg/mL.

$$\frac{275.0 \text{ mg}}{5 \text{ mL}} = 55 \text{ mg/mL}$$

8.2. Calculate the concentration of the 1:100 dilution of the concentrated PCB standard as in the following example.

8.2.1. If 50 μL of a PCB standard whose concentration is 55 mg/mL is diluted to 5 mL with hexane, the concentration of the dilute standard is 550 μg/mL.

$$\frac{(55 \text{ mg/mL}) \left(\frac{1 \text{ mL}}{1000 \ \mu\text{L}}\right) (50 \ \mu\text{L}) \left(\frac{1000 \ \mu\text{g}}{1 \text{ mg}}\right)}{5 \text{ mL}} = 550 \ \mu\text{g/mL}$$

8.3. Calculate the concentration of PCB spiked onto a gauze sample as in the following example.

8.3.1. If 24 μL of a 550 μg/mL PCB standard is spiked onto a gauze square, the PCB concentration in the QC sample is 13 μg/sample. Multiply the result by the RSD calculated in Step 2.1 to obtain the uncertainty.

$$\frac{(550 \ \mu\text{g/mL}) \left(\frac{1 \text{ mL}}{1000 \ \mu\text{L}}\right) (24 \ \mu\text{L})}{\text{sample}} = 13 \ \mu\text{g/sample}$$

8.4. Record Aroclor concentrations in μg/sample.

9. Proper Waste Disposal Practices

9.1. Solid Waste

9.1.1. PCB-contaminated solid waste, such as paper wipes, glass or plastic pipettes, empty vials, and incorrectly spiked QC samples, is accumulated in a covered metal can lined with a plastic bag and is kept segregated from non-PCB-contaminated solid waste.

9.1.2. The can is labeled with a hazardous waste label and a label indicating its use for PCB-contaminated waste.

9.1.3. The can is opened only for the period of time necessary to add waste to it.

9.1.4. When the plastic bag is full, it is sealed with tape, removed from the can, identified as PCB-contaminated waste, and placed in a functioning chemical exhaust hood pending pickup by the Waste Management Group.

9.1.5. A new plastic bag is put into the waste can for continued use.

9.2. Liquid Waste

9.2.1. PCB-contaminated liquid waste, such as rinses from PCB-contaminated syringes, PCB standards, and incorrectly spiked QC samples, is accumulated in a covered polyethylene bottle in a secondary containment tray and is kept segregated from non-PCB-contaminated liquid waste.

9.2.2. The bottle is labeled with a hazardous waste label and a label indicating its use for PCB-contaminated waste.

9.2.3. The bottle is opened only for the period of time necessary to add waste to it.

9.2.4. When the bottle is full, it is capped and kept in the secondary containment tray pending pickup by the Waste Management Group.

9.2.5. A new bottle is labeled for further use.

9.3. Waste Pickup

9.3.1. Pickup by the Waste Management Group of a full bag or bottle of PCB-contaminated waste is requested using the current Chemical Waste Disposal Request form. The current Waste Profile Request Form

(WPRF) that describes the waste is referenced on the Chemical Waste Disposal Request.

9.3.2. The Waste Management Group picks up the waste for disposal in accordance with Laboratory policy.

10. Source Materials

10.1. M. A. Gautier, E. S. Gladney, N. L. Koski, M. B. Phillips, E. A. Jones, and B. T. O'Malley, "Quality Assurance for Health and Environmental Chemistry: 1989," Los Alamos National Laboratory report LA-11995-MS (1990).

10.2. M. A. Gautier, E. S. Gladney, N. L. Koski, E. A. Jones, and B. T. O'Malley, "Quality Assurance for Health and Environmental Chemistry: 1990," Los Alamos National Laboratory report LA-12208-MS (1991).

10.3. M. A. Gautier, E. S. Gladney, N. L. Koski, E. A. Jones, and B. T. O'Malley, "Quality Assurance for Environmental Chemistry: 1991," Los Alamos National Laboratory report LA-12436-MS (1992).

10.4. "Chemical, Hazardous, and Mixed Waste," Administrative Requirement 10-3, in *Environment, Safety, and Health Manual*, Los Alamos National Laboratory Manual, Chapter 1 (most recent edition).

10.5. "Polychlorinated Biphenyls," Administrative Requirement 10-4, in *Environment, Safety, and Health Manual*, Los Alamos National Laboratory Manual, Chapter 1 (most recent edition).

SEMIVOLATILE ORGANIC COMPOUNDS ON SOIL — QC SAMPLE PREPARATION

Analyte: Semivolatile organic compounds	**Method No.** QCO210
Matrix: Soil	**Spike Range:** 0.67 - 6.67 mg/kg
Procedure: Gas chromatography and mass spectrometry	**Accuracy and Precision:** 100% ± 5.2% RSD
Effective Date: 01/22/90	**Authors:** Nancy L. Koski Margaret A. Gautier Carol R. Sutcliffe

SAFETY NOTE: Before beginning this procedure, read all of the Material Safety Data Sheets for the chemicals listed in Sec. 5. Read Sec. 4.3 of the EM-9 Safety Manual for information on personal protective clothing and equipment. Read Sec. 9 of this procedure and Source Material 10.3 for proper waste disposal practices.

1. Principle of Method

1.1. Prepare stock solutions in acetone of 4-10 semivolatile compounds from the list in Table I.

1.2. Spike the stocks onto 30 g of blank soil.

2. Accuracy and Precision

2.1. The propagated error on QC preparation is based on the calibration error of the standard and on the error associated with use of the volumetric flask, microsyringe, and balance. A relative standard deviation (RSD) of 5.2% has been calculated for the error of the standard and for spiking, weighing, and dilution, based on the following:

$$D = \frac{M1 \times M2 \times M4}{M3 \times M5},$$

where D = calculated result,
M1 = standard error,
M2 = weighing error,
M3 = dilution error,
M4 = spiking error, and
M5 = weighing error.

2.1.1. Calculate relative variance using the following equation.

$$R_M^2 = \frac{\sigma^2}{\overline{X}^2} ,$$

where R^2_M = relative variance,
M = $M_1 \ldots M_n$ (variable),
σ^2 = variance (std dev^2), and
$\overline{X}$ = mean value of each variable (M).

2.1.2. Calculate percent relative standard deviation using the following equation.

$$S_{D_T} = \sqrt{R^2_{M1} + R^2_{M2} + R^2_{M3} + R^2_{M4} + R^2_{M5}} \times 100 ,$$

where SD_T = relative standard deviation (% error),
R^2_{M1} = relative variance of standard,
R^2_{M2} = relative variance of balance,
R^2_{M3} = relative variance of volumetric flask,
R^2_{M4} = relative variance of microsyringe,
R^2_{M5} = relative variance of balance, and
100 = factor to convert to percentage.

2.2. Analysis by GCMS of QC samples prepared between 1990 and 1991 using this procedure are summarized and tabulated below. The data are published in Source Materials 10.1 and 10.2.

SEMIVOLATILE ORGANIC COMPOUNDS ON SOIL SPIKE RECOVERY DATA

	1990			1991		
Compound	Mean	± SD	(n)	Mean	± SD	(n)
Acenaphthene		—		62		(1)
Acenaphthylene		—			—	
Aniline	10	± 4	(3)		—	
Anthracene	80	± 28	(12)	85	± 10	(8)
Azobenzene		—			—	
Benzo[a]anthracene		—			—	
Benzo[b]fluoranthene	98		(2)	78	± 9	(3)
Benzo[k]fluoranthene		—			—	

SEMIVOLATILE ORGANIC COMPOUNDS ON SOIL
SPIKE RECOVERY DATA (cont.)

Compound	1990 Mean	± SD	(n)	1991 Mean	± SD	(n)
Benzoic acid	50	± 37	(8)	20	± 7	(3)
Benzo[g,h,i]perylene	—			—		
Benzo[a]pyrene	—			60		(1)
Benzyl alcohol	62	± 16	(4)	73	± 37	(8)
Bis(2-chloroethoxy)methane	—			—		
Bis(2-chloroethyl)ether	67	± 9	(5)	79	± 12	(4)
Bis(2-chloroisopropyl)ether	—			—		
Bis(2-ethylhexyl)phthalate	—			—		
4-Bromophenyl phenylether	—			—		
Butyl benzyl phthalate	—			—		
4-Chloroaniline	—			—		
4-Chloro-3-methylphenol	—			76	± 16	(5)
2-Chloronaphthalene	—			58	± 12	(6)
2-Chlorophenol	—			58	± 10	(3)
4-Chlorophenyl phenyl ether	—			—		
Chrysene	—			135	± 60	(4)
Di-n-butyl phthalate	—			67	± 4	(6)
Di-n-octyl phthalate	—			124	± 91	(3)
Dibenzo[a,h]anthracene	—			—		
Dibenzofuran	—			—		
1,2-Dichlorobenzene	—			94	± 11	(11)
1,3-Dichlorobenzene	—			—		
1,4-Dichlorobenzene	9		(1)	57	± 9	(4)
2,4-Dichlorophenol	66		(2)	62	± 14	(6)
Diethyl phthalate	111	± 33	(12)	69		(1)
2,4-Dimethylphenol	35		(2)	58	± 12	(5)
Dimethyl phthalate	78		(2)	—		
4,6-Dinitro-2-methylphenol	—			—		
2,4-Dinitrophenol	—			—		
2,4-Dinitrotoluene	—			88		(1)
2,6-Dinitrotoluene	—			68		(1)
Fluoranthene	—			93	± 12	(8)
Fluorene	—			—		
Hexachlorobenzene	54		(1)	—		
Hexachlorobutadiene	59	± 18	(12)	66	± 18	(8)
Hexachlorocyclopentadiene	36		(1)	64		(2)
Hexachloroethane	9		(1)	51	± 27	(4)
Indeno[1,2,3-cd]pyrene	—			—		
Isophorone	64	± 18	(11)	—		
2-Methylnaphthalene	—			—		

SEMIVOLATILE ORGANIC COMPOUNDS ON SOIL
SPIKE RECOVERY DATA (cont.)

Compound	1990 Mean	±	SD	(n)	1991 Mean	±	SD	(n)
2-Methylphenol		—				—		
4-Methylphenol		—				—		
Naphthalene	55	±	20	(3)	55	±	5	(3)
2-Nitroaniline		—				—		
3-Nitroaniline		—			23	±	11	(3)
4-Nitroaniline	39	±	23	(3)	31	±	13	(4)
Nitrobenzene	59			(2)		—		
2-Nitrophenol		—				—		
4-Nitrophenol	77	±	32	(5)	75	±	15	(11)
N-Nitrosodiphenylamine		—			77			(1)
N-Nitrosodi-n-propylamine		—				—		
Pentachlorophenol		—				—		
Phenanthrene	89			(2)		—		
Phenol	64	±	9	(6)		—		
Pyrene		—				—		
1,2,4-Trichlorobenzene		—				—		
2,4,5-Trichlorophenol	74	±	11	(3)		—		
2,4,6-Trichlorophenol		—				—		

3. Collection and Storage of Samples

3.1. The blank soil matrix and the spiked samples should be stored in glass bottles fitted with Teflon-lined lids. Avoid using plastic containers and lids because phthalates, which are semivolatile compounds, may leach from plastics and contaminate the sample.

3.2. Spiked QC samples are refrigerated pending analysis. The maximum holding time for the analysis of semivolatile compounds in soil is 14 days.

4. Apparatus

4.1. Volumetric flask: 5-mL, class A, glass.

4.2. Syringes: gas-tight, 25-, 50-, 100-, and 250-μL.

4.3. Spatulas.

4.4. Pipettes: Pasteur, glass.

4.5. Pipette bulb: rubber, to fit Pasteur pipette.

4.6. Vials: 1.5-mL, glass.

4.7. Caps: open-top, to fit vials.

4.8. Septa: Teflon/silicone discs to fit open-top caps.

4.9. Teflon tape.

4.10. Bottles: 2-oz, glass, with Teflon-lined caps.

4.11. Analytical balance: 200-g minimum capacity, 0.1-mg accuracy.

4.12. Laboratory oven: capable of sustaining 100-150°C.

4.13. Labels printed with QC sample numbers.

5. Reagents

5.1. Soil. A clean, dry 30-g aliquot is required for each sample. A suitable soil does not contain the analyte of interest and presents few interferences to the analytical method.

5.2. Blank soil, heated to nominally 100°C for 5 h and stored in glass, is used as a sample matrix.

5.3. Acetone (analytical-grade).

5.4. Methanol (analytical-grade).

5.5. Methylene chloride (analytical-grade).

6. Calibration and Standards

6.1. Prepare a stock solution of neat, standard-grade semivolatile analytes chosen from Table I. Use Chem Service or equivalent chemicals (Chem Service, Inc., Box 3108, West Chester, PA 19387). Use both acid and base/neutral semivolatile analytes because the two fractions are extracted separately before being recombined for analysis. Add solid analytes first, then liquid analytes after the addition of solvent.

6.1.1. Add 8-12 mg of a solid semivolatile analyte to a clean, tared 5.0-mL volumetric flask. Record the mass and tare the balance. Repeat for each solid analyte.

6.1.2. Add approximately 2 mL of acetone to the flask, stopper the flask, and swirl it to see if all analytes will dissolve. If not, methylene chloride and/or methanol may be added to effect total dissolution. For example,

chrysene requires methylene chloride and methanol and gentle heating to effect total dissolution.

6.1.3. Place the stoppered flask on the analytical balance and tare the balance.

6.1.4. Calculate the volumes of liquid analytes needed to reach a weight spike range of 8-12 mg in 5 mL of stock solution. See Step 8.2.

6.1.5. Add a liquid analyte from a syringe just above the surface of the acetone. Stopper the flask and record the mass and volume of the analyte added. Tare the balance. Repeat for each liquid analyte.

6.1.6. Dilute the solution to volume with acetone. Mix by inversion.

6.1.7. Discard the solution in the neck of the flask to minimize concentration changes due to loss of analytes from the surface of the solution.

6.1.8. The concentration of analytes in the stock solution will be 1.5-2.5 mg/mL.

6.1.9. Transfer the stock solution to vials fitted with Teflon septa and caps. Wrap Teflon tape over and around the caps.

6.1.10. Label the vials with information identifying the standard and with the expiration date.

6.1.11. The standard solution in acetone is stable for approximately three months stored at -20°C.

6.2. Prepare additional stock solution using different analytes from Table I. The number of analytes in the QC sample may be increased by using more than one stock solution to spike the sample.

7. Procedure

7.1. Cleaning glassware.

7.1.1. Wash volumetric flasks with detergent and rinse with hot tap water and then with methanol.

7.1.2. Store glassware in a laboratory oven maintained at 100-150°C to minimize contamination.

7.2. Cleaning syringes.

7.2.1. Dedicate a group of syringes for use only with semivolatile compounds.

7.2.2. Fill the syringe through the needle with methanol. Discard the methanol into a waste container. Repeat for a total of 5-10 times.

7.2.3. Dry the syringe by pulling a vacuum on it for approximately 10 min.

7.3. Prepare QC samples to equal at least 10% of the total number of samples to be analyzed.

7.3.1. Remove a vial of semivolatile stock solution from the freezer and allow it to come to room temperature. Do not let the vial sit at room temperature for longer than 2 h before spiking the QC sample.

7.3.2. Accurately weigh 30 g of blank soil into a 2-oz glass bottle. Record the mass of soil on the bottle with a felt-tipped pen for reference by the analyst.

7.3.3. Using a gas-tight syringe, spike a volume of the standard onto the surface of the soil to reach the desired spike range. Blank QC samples may be prepared by spiking acetone onto the soil. The analyst will use the entire sample.

7.3.4. Cap the vial with a Teflon-lined lid and label it with a QC number.

7.3.5. Return the stock solution to the freezer.

7.3.6. Refrigerate the QC sample pending analysis. The maximum holding time for semivolatile organic compounds on soil QC samples is 14 days.

7.4. Record QC standard information, sample number, sample description, spike amount, concentration, uncertainty, and all calculations in the QC Laboratory notebook and enter them into the CVS and CVD databases on the VAX.

8. Calculations

8.1. Use 8-12 mg of a solid analyte in 5.0 mL of stock solution.

8.2. Calculate the volume of neat liquid analyte needed to prepare a stock solution in the range of 8-12 mg/5 mL.

8.2.1. Read the density of the neat liquid analyte from Table I. The density of nitrobenzene is 1.196 mg/μL.

8.2.2. The desired weight spike range for 5 mL of stock solution is 8-12 mg of neat analyte.

8.2.3. Divide the weight spike range by the density of the neat analyte to determine the desired volume spike range of neat analyte to use in 5 mL of stock solution.

$$\frac{8\ \text{mg}}{1.196\ \text{mg}/\mu\text{L}}\ \text{to}\ \frac{12\ \text{mg}}{1.196\ \text{mg}/\mu\text{L}} = 6.7\ \text{to}\ 10.0\ \mu\text{L}$$

For nitrobenzene, between 6.7 and 10 μL of the neat analyte should be diluted to 5 mL to reach the desired concentration range of 1.5-2.5 mg/mL in the stock solution.

8.3. Calculate the concentration of each analyte in the stock solution as in the following examples.

8.3.1. If 9.6 mg of solid anthracene is dissolved in 5.0 mL of stock solution, the concentration of anthracene in the stock solution is 1.92 mg/mL.

$$\frac{9.6\ \text{mg}}{5.0\ \text{mL}} = 1.92\ \text{mg/mL}$$

8.3.2. If 9 μL of liquid nitrobenzene, weighing 10.8 mg, is diluted in 5 mL of stock solution, the concentration of nitrobenzene in the stock solution is 2.16 mg/mL.

$$\frac{10.8\ \text{mg}}{5\ \text{mL}} = 2.16\ \text{mg/mL}$$

8.4. Calculate the concentration of each analyte in the QC sample as in the following example.

8.4.1. If 60 μL of a stock standard solution containing 1.92 mg/mL of anthracene and 2.16 mg/mL of nitrobenzene is spiked onto 30.0018 g of blank soil, the concentration of anthracene in the QC sample will be 3.84 mg/kg. Multiply the result by the RSD calculated in Step 2.1 to obtain the uncertainty.

$$\frac{(1.92\ \text{mg/mL})\ (60\ \mu\text{L})\left(\frac{1\ \text{mL}}{1000\ \mu\text{L}}\right)}{30.0018\ \text{g}\left(\frac{1\ \text{kg}}{1000\ \text{g}}\right)} = 3.84\ \text{mg/kg}$$

The concentration of nitrobenzene in the QC sample will be 4.32 mg/kg. Multiply the result by the RSD calculated in Step 2.1 to obtain the uncertainty.

$$\frac{(2.16\ \text{mg/mL})\ (60\ \mu\text{L})\left(\frac{1\ \text{mL}}{1000\ \mu\text{L}}\right)}{30.0018\ \text{g}\left(\frac{1\ \text{kg}}{1000\ \text{g}}\right)} = 4.32\ \text{mg/kg}$$

8.5. Record the analyte concentrations in the QC sample in mg/kg or μg/g.

9. Proper Waste Disposal Practices

9.1. Solid Waste

9.1.1. Solid waste, such as paper wipes, glass or plastic pipettes, empty vials, and incorrectly spiked QC samples contaminated with organic compounds, is accumulated in a covered metal can lined with a plastic bag and is kept segregated from PCB-contaminated solid waste and solid waste that is not contaminated with organic compounds.

9.1.2. The can is labeled with a hazardous waste label and a label indicating its use for waste contaminated with organic compounds.

9.1.3. The can is opened only for the period of time necessary to add waste.

9.1.4. When the plastic bag is full, it is sealed with tape, removed from the can, identified as waste contaminated with organic compounds, and placed in a functioning chemical exhaust hood or in a closed secondary container pending pickup by the Waste Management Group.

9.1.5. A new plastic bag is put into the waste can for continued use.

9.2. Liquid Waste

9.2.1. Liquid waste containing organic compounds, such as rinses from syringes, excess QC samples, and incorrectly spiked QC samples, is accumulated in a covered metal can in a secondary containment tray.

9.2.1.1. Liquid waste containing organic compounds but no PCBs is kept segregated from PCB-contaminated liquid waste.

9.2.1.2. The can is labeled with a hazardous waste label and a label indicating its use for waste containing organic compounds.

9.2.1.3. When the can is full, it is capped and kept in the secondary containment tray pending pickup by the Waste Management Group.

9.2.1.4. A new can is labeled for future use.

9.2.2. Two-mL vials containing out-of-date spiking solutions of organic compounds are accumulated in a glass jar in a secondary containment tray.

9.2.2.1. Solutions that are not contaminated with PCBs are kept segregated from those that are PCB-contaminated.

9.2.2.2. The jar is labeled with a hazardous waste label and a label indicating its use for waste containing organic compounds.

9.2.2.3. The jar is opened only for the period of time necessary to add vials.

9.2.2.4 When the jar is full, it is capped and kept in the secondary containment tray pending pickup by the Waste Management Group.

9.2.2.5. A new jar is labeled for future use.

9.3. Waste Pickup

9.3.1. Pickup by the Waste Management Group of a full bag, can, or jar of waste contaminated with organic compounds is requested using the current Chemical Waste Disposal Request form. The current Waste Profile Request Form (WRPF) that describes the waste is referenced on the Chemical Waste Disposal Request.

9.3.2. The Waste Management Group picks up the waste for disposal according to Laboratory policy.

10. Source Materials

10.1. M. A. Gautier, E. S. Gladney, N. L. Koski, E. A. Jones, and B. T. O'Malley, "Quality Assurance for Health and Environmental Chemistry: 1990," Los Alamos National Laboratory report LA-12208-MS (1991).

10.2. M. A. Gautier, E. S. Gladney, N. L. Koski, E. A. Jones, and B. T. O'Malley, "Quality Assurance for Environmental Chemistry: 1991," Los Alamos National Laboratory report, LA-12436-MS (1992).

10.3. "Chemical, Hazardous, and Mixed Waste," Administrative Requirement 10-3, in *Environment, Safety, and Health Manual*, Los Alamos National Laboratory Manual, Chapter 1 (most recent edition).

TABLE I. SEMIVOLATILE ORGANIC COMPOUNDS

Analyte	CAS No.	Category	Density of liquid, (mg/μL)
acenaphthene	83329	Base/Neutral	solid
acenaphthylene	208968	Base/Neutral	0.899
aniline	62533	Base/Neutral	1.022
anthracene	120127	Base/Neutral	solid
azobenzene	103333	Base/Neutral	1.090
benz[a]anthracene	56553	Base/Neutral	solid
benzo[b]fluoranthene	205992	Base/Neutral	solid
benzo[k]fluoranthene	207089	Base/Neutral	solid
benzoic acid	65850	Acid	solid
benzo[g,h,i]perylene	191242	Base/Neutral	solid
benzo[a]pyrene	50328	Base/Neutral	solid
benzyl alcohol	100516	Base/Neutral	1.045
bis(2-chloroethoxy)methane	111911	Base/Neutral	solid
bis(2-chloroethyl)ether	111444	Base/Neutral	1.220
bis(2-chloroisopropyl)ether	108601	Base/Neutral	solid
bis(2-ethylhexyl) phthalate	117817	Base/Neutral	0.981
4-bromophenyl phenyl ether	101553	Base/Neutral	1.423
butyl benzyl phthalate	85687	Base/Neutral	0.966
4-chloroaniline	106478	Base/Neutral	solid
4-chloro-3-methylphenol	59507	Acid	solid
2-chloronaphthalene	91587	Base/Neutral	solid
2-chlorophenol	95578	Acid	1.241
4-chlorophenyl phenyl ether	7005723	Base/Neutral	solid
chrysene	218019	Base/Neutral	solid
di-n-butyl phthalate	84742	Base/Neutral	1.043
di-n-octyl phthalate	117840	Base/Neutral	0.981
dibenz[a,h]anthracene	53703	Base/Neutral	solid
dibenzofuran	132649	Base/Neutral	solid
1,2-dichlorobenzene	95501	Base/Neutral	1.306
1,3-dichlorobenzene	541731	Base/Neutral	1.288
1,4-dichlorobenzene	106467	Base/Neutral	1.241
2,4-dichlorophenol	120832	Acid	solid
diethyl phthalate	84662	Base/Neutral	1.118
2,4-dimethylphenol	105679	Acid	1.027
dimethyl phthalate	131113	Base/Neutral	1.190
4,6-dinitro-2-methylphenol	534521	Acid	solid
2,4-dinitrophenol	51285	Acid	solid

TABLE I. SEMIVOLATILE ORGANIC COMPOUNDS (cont)

Analyte	CAS No.	Category	Density of liquid, (mg/μL)
2,4-dinitrotoluene	121142	Base/Neutral	solid
2,6-dinitrotoluene	606202	Base/Neutral	solid
fluoranthene	206440	Base/Neutral	solid
fluorene	86737	Base/Neutral	solid
hexachlorobenzene	118741	Base/Neutral	solid
hexachlorobutadiene	87683	Base/Neutral	1.665
hexachlorocyclopentadiene	77474	Base/Neutral	1.702
hexachloroethane	67721	Base/Neutral	2.091
indeno[1,2,3-cd]pyrene	193395	Base/Neutral	solid
isophorone	78591	Base/Neutral	0.923
2-methylnaphthalene	91576	Base/Neutral	1.000
2-methylphenol	95487	Acid	1.048
4-methylphenol	106445	Acid	1.034
naphthalene	91203	Base/Neutral	solid
2-nitroaniline	88744	Base/Neutral	solid
3-nitroaniline	99092	Base/Neutral	solid
4-nitroaniline	100016	Base/Neutral	solid
nitrobenzene	98953	Base/Neutral	1.196
2-nitrophenol	88755	Acid	solid
4-nitrophenol	100027	Acid	solid
N-nitrosodiphenylamine	86306	Base/Neutral	solid
N-nitrosodi-n-propylamine	621647	Base/Neutral	solid
pentachlorophenol	87865	Acid	1.978
phenanthrene	85018	Base/Neutral	solid
phenol	108952	Acid	solid
pyrene	129000	Base/Neutral	solid
1,2,4-trichlorobenzene	120821	Base/Neutral	1.454
2,4,5-trichlorophenol	95954	Acid	solid
2,4,6-trichlorophenol	88062	Acid	solid

SEMIVOLATILE ORGANIC COMPOUNDS IN WATER — QC SAMPLE PREPARATION

Analyte: Semivolatile organic compounds	**Method No.:** QCO220
Matrix: Water	**Spike Range:** 20-200 μg/L
Procedure: Gas chromatography and mass spectrometry (GCMS)	**Accuracy and Precision:** 100% ± 5.2% RSD
Effective Date: 01/01/90	**Authors:** Nancy L. Koski Margaret A. Gautier Carol Sutcliffe

SAFETY NOTE: Before beginning this procedure, read all of the Material Safety Data Sheets for the chemicals listed in Sec. 5. Read Sec. 4.3 of the EM-9 Safety Manual for information on personal protective clothing and equipment. Read Sec. 9 of this procedure and Source Material 10.3 for proper waste disposal practices.

1. Principle of Method

1.1. Prepare stock solutions of 4-10 semivolatile compounds in acetone from the list in Table I.

1.2. Spike the stocks into 1 L of distilled water.

2. Accuracy and Precision

2.1. The propagated error on QC preparation is based on the error of the standard and on the error associated with use of the microsyringe, balance, and volumetric flask. A relative standard deviation (RSD) of 5.2% has been calculated for the error of the standard and for spiking, weighing, and dilution based on the following:

$$D = \frac{M1 \times M2 \times M4}{M3 \times M5} ,$$

where D = calculated result,
M1 = standard error,
M2 = weighing error,
M3 = dilution error,
M4 = pipette error, and
M5 = second dilution error.

2.1.1. Calculate relative variance using the following equation.

$$R_M^2 = \frac{\sigma^2}{\overline{X}^2} ,$$

where R^2_M = relative variance,
M = $M_1 \ldots . M_n$ (variable),
σ^2 = variance (std dev^2), and
$\overline{X}$ = mean value of each variable (M).

2.1.2. Calculate percent relative standard deviation using the following equation.

$$\%S_{D_T} = \sqrt{R^2_{M1} + R^2_{M2} + R^2_{M3} + R^2_{M4}} \times 100 ,$$

where SD_T = relative standard deviation (% error),
R^2_{M1} = relative variance of standard,
R^2_{M2} = relative variance of balance,
R^2_{M3} = relative variance of volumetric flask,
R^2_{M4} = relative variance of microsyringe,
R^2_{M5} = relative variance of second volumetric flask, and
100 = factor to convert to percentage.

2.2. Analyses by GCMS of QC samples prepared between 1990 and 1991 using this procedure are tabulated below. The data are published in Source Materials 10.1 and 10.2.

SEMIVOLATILE ORGANIC COMPOUNDS IN WATER SPIKE RECOVERY DATA

Compound	1990 Mean ± SD	(n)	1991 Mean ± SD	(n)
Acenaphthene	—		84 ± 18	(4)
Acenaphthylene	—		—	
Aniline	84 ± 19	(4)	88	(1)
Anthracene	58 ± 15	(5)	—	
Azobenzene	—		—	
Benzo[a]anthracene	—		—	

SEMIVOLATILE ORGANIC COMPOUNDS IN WATER
SPIKE RECOVERY DATA (cont)

Compound	1990 Mean	±	SD	(n)	1991 Mean	±	SD	(n)
Benzo[b]fluoranthene		—			85			(2)
Benzo[k]fluoranthene		—				—		
Benzoic acid	54	±	35	(9)	57	±	43	(4)
Benzo[g,h,i]perylene		—				—		
Benzo[a]pyrene		—			40			(2)
Benzyl alcohol	53	±	29	(4)	79	±	22	(6)
Bis(2-chloroethoxy)methane		—				—		
Bis(2-chloroethyl)ether	63	±	7	(4)	60	±	19	(4)
Bis(2-chloroisopropyl)ether		—				—		
Bis(2-ethylhexyl)phthalate		—				—		
4-Bromophenyl phenyl ether			—				—	
Butyl benzyl phthalate		—				—		
4-Chloroaniline		—				—		
4-Chloro-3-methylphenol		—			67	±	29	(4)
2-Chloronaphthalene		—			60			(2)
2-Chlorophenol		—			60	±	15	(4)
4-Chlorophenyl phenyl ether		—				—		
Chrysene		—			16			(1)
Di-n-butyl phthalate		—			29			(2)
Di-n-octyl phthalate		—			66	±	15	(4)
Dibenzo[a,h]anthracene		—				—		
Dibenzofuran		—				—		
1,2-Dichlorobenzene		—				—		
1,3-Dichlorobenzene		—				—		
1,4-Dichlorobenzene		—			31			(2)
2,4-Dichlorophenol	58			(2)	67			(2)
Diethyl phthalate	46	±	56	(4)	15			(2)
2,4-Dimethylphenol		—			70	±	15	(6)
Dimethyl phthalate		—				—		
4,6-Dinitro-2-methylphenol		—				—		
2,4-Dinitrophenol		—				—		
2,4-Dinitrotoluene		—				—		
2,6-Dinitrotoluene		—			42	±	25	(4)
Fluoranthene		—			78	±	19	(6)
Fluorene		—				—		
Hexachlorobenzene	64	±	6	(3)		—		
Hexachlorobutadiene	47	±	6	(5)	50	±	6	(4)
Hexachlorocyclopentadiene	48			(2)	46	±	12	(4)
Hexachloroethane	48			(2)		—		
Indeno[1,2,3-cd]pyrene		—				—		

SEMIVOLATILE ORGANIC COMPOUNDS IN WATER
SPIKE RECOVERY DATA (cont)

Compound	1990 Mean	± SD	(n)	1991 Mean	± SD	(n)
Isophorone	69	± 13	(5)		—	
2-Methylnaphthalene		—			—	
2-Methylphenol		—			—	
4-Methylphenol		—			—	
Naphthalene		—		58		(2)
2-Nitroaniline		—			—	
3-Nitroaniline		—		70		(2)
4-Nitroaniline		—		80	± 17	(4)
Nitrobenzene		—			—	
2-Nitrophenol		—			—	
4-Nitrophenol	85	± 23	(6)	62	± 20	(8)
N-Nitrosodiphenylamine		—		42	± 27	(4)
N-Nitrosodi-n-propylamine		—			—	
Pentachlorophenol	92	± 27	(6)		—	
Phenanthrene	64		(2)		—	
Phenol	49	± 14	(4)	66		(2)
Pyrene		—			—	
1,2,4-Trichlorobenzene		—			—	
2,4,5-Trichlorophenol	74	± 17	(10)		—	
2,4,6-Trichlorophenol		—			—	

3. Collection and Storage of Samples

3.1. Distilled water is used as the blank matrix. Use water that has not come into contact with plastic tubing or plastic holding vessels because phthalates, which are semivolatile organic compounds, may leach from plastics and contaminate the sample.

3.2. Spiked QC samples are refrigerated pending analysis. The maximum holding time for semivolatiles in water is seven days.

4. Apparatus

4.1. Volumetric flasks: 5-mL, class A, glass.

4.2. Syringes: gas-tight, 25-, 50-, 100-, and 250-μL.

4.3. Spatulas.

4.4. Pipettes: Pasteur, glass.

4.5. Pipette bulb: rubber, to fit Pasteur pipette.

4.6. Vials: 1.5-mL, glass.

4.7. Caps: open-top, to fit vials.

4.8. Septa: Teflon/silicone discs to fit open-top caps.

4.9. Teflon tape.

4.10. Bottles: 1-L wide-mouth glass jars, amber, pre-cleaned, with Teflon-lined lids.

4.11. Analytical balance: 100-g minimum capacity, 0.1-mg accuracy.

4.12. Laboratory oven: capable of sustaining 100-150°C.

4.13. Labels: printed with QC sample numbers.

5. Reagents

5.1. Acetone (analytical-grade).

5.2. Methanol (analytical-grade).

5.3. Methylene chloride (analytical-grade).

6. Calibration and Standards

6.1. Prepare a stock solution of neat, standard-grade semivolatile analytes chosen from Table I. Use Chem Service or equivalent chemicals (Chem Service, Inc., Box 3108, West Chester, PA 19381). Use both acid and base/neutral semivolatile analytes because the two fractions are extracted separately before being recombined for analysis. Add solid analytes first, then liquid analytes after the addition of solvent.

6.1.1. Add 8-12 mg of a solid semivolatile analyte to a clean, tared 5.0-mL volumetric flask. Record the mass and tare the balance. Repeat for each solid analyte.

6.1.2. Add approximately 2 mL of acetone to the flask, stopper the flask, and swirl it to see if all analytes will dissolve. If not, methylene chloride and/or methanol may be added to effect total dissolution. For example, chrysene requires methylene chloride and methanol and gentle heating to effect total dissolution.

6.1.3. Place the stoppered flask on the analytical balance and tare the balance.

6.1.4. Calculate the volumes of liquid analytes needed to reach a weight spike range of 8-12 mg in 5 mL of stock solution. See Step 8.2.

6.1.5. Add a liquid analyte from a syringe just above the surface of the acetone. Stopper the flask and record the mass and volume of analyte added. Tare the balance. Repeat for each liquid analyte added.

6.1.6. Dilute the solution to volume with acetone. Mix by inversion.

6.1.7. Discard the solution in the neck of the flask to minimize concentration changes due to loss of analytes from the surface of the solution.

6.1.8. The concentration of analytes in the stock solution will be 1.5-2.5 mg/mL.

6.1.9. Transfer the stock solution to vials fitted with Teflon septa and caps. Wrap Teflon tape over and around the caps.

6.1.10. Label the vials with information identifying the standard and with the expiration date.

6.1.11. The stock solution in acetone is stable for approximately three months stored at -20°C.

6.2. Prepare additional stock solutions using different analytes from Table I. The number of analytes in the QC sample may be increased by using more than one solution to spike the sample.

7. Procedure

7.1. Cleaning glassware.

7.1.1. Wash volumetric flasks with detergent and rinse with hot tap water and then with methanol.

7.1.2. Store glassware in a laboratory oven maintained at 100-150°C to minimize contamination.

7.2. Cleaning syringes.

7.2.1. Dedicate a group of syringes for use only with semivolatile compounds.

7.2.2. Fill the syringe through the needle with methanol. Discard the methanol into a waste container. Repeat for a total of 5-10 times.

7.2.3. Dry the syringe by pulling a vacuum on it for approximately 10 min.

7.3. Prepare QC samples to equal at least 10% of the total number of samples to be analyzed.

7.3.1. Remove a vial of semivolatile stock solution from the freezer and allow it to come to room temperature. Do not let the vial sit at room temperature for longer than 2 h before spiking the QC sample.

7.3.2. Fill a pre-cleaned 1-L amber bottle to the neck with distilled water. Use only distilled water that has not been stored in plastic or run through plastic tubing.

7.3.3. Using a syringe, spike a volume of the solution below the surface of the water to reach the desired spike range. Blank QC samples may be prepared by spiking acetone into the water. The analyst will use the entire sample assuming a 1-L volume.

7.3.4. Cap the bottle and label it with a QC sample number.

7.3.5. Return the stock solution to the freezer.

7.3.6. Refrigerate the QC sample pending analysis. The maximum holding time for semivolatile organic compounds in water QC samples is 7 days.

7.4. Record QC standard information, sample number, sample description, spike amount, concentration, uncertainty, and all calculations in the QC Laboratory notebook and enter them into the CVS and CVD databases on the VAX.

8. Calculations

8.1. Use 8-12 mg of a solid analyte in 5.0 mL of stock solution.

8.2. Calculate the volume of a neat liquid analyte needed to prepare a stock solution in the range of 8-12 mg/5 mL.

8.2.1. Read the density of the neat liquid analyte from Table I. The density of nitrobenzene is 1.196 mg/μL.

8.2.2. The desired weight spike range for 5 mL of stock solution is 8-12 mg of neat analyte.

8.2.3. Divide the weight spike range by the density of the neat analyte to determine the desired volume spike range of neat analyte to use in 5 mL of stock solution.

$$\frac{8\ \text{mg}}{1.196\ \text{mg}/\mu\text{L}} \text{ to } \frac{12\ \text{mg}}{1.196\ \text{mg}/\mu\text{L}} = 6.7 \text{ to } 10.0\ \mu\text{L}$$

For nitrobenzene, between 6.7 and 10 μL of the neat analyte should be diluted to 5 mL to reach the desired concentration range of 1.5-2.5 mg/mL in the stock solution.

8.3. Calculate the concentration of each analyte in the stock solution as in the following examples.

8.3.1. If 9.6 mg of solid anthracene is dissolved in 5.0 mL of stock solution, the concentration of anthracene in the stock solution is 1.92 mg/mL.

$$\frac{9.6\ \text{mg}}{5.0\ \text{mL}} = 1.92\ \text{mg/mL}$$

8.3.2. If 9 μL of liquid nitrobenzene, weighing 10.8 mg, is diluted in 5 mL of stock solution, the concentration of nitrobenzene in the stock solution is 2.16 mg/mL.

$$\frac{10.8\ \text{mg}}{5\ \text{mL}} = 2.16\ \text{mg/mL}$$

8.4. Calculate the concentration of each analyte in the QC sample as in the following example.

8.4.1. If 60 μL of a stock standard solution containing 1.92 mg/mL of anthracene and 2.16 mg/mL of nitrobenzene is spiked into 1 L of distilled water, the concentration of anthracene in the QC sample will be 115 μg/L. Multiply the result by the RSD calculated in Step 2.1 to obtain the uncertainty.

$$\frac{(1.92\ \text{mg/mL})\ (60\ \mu\text{L}) \left(\frac{1\ \text{mL}}{1000\ \mu\text{L}}\right) \left(\frac{1000\ \mu\text{g}}{1\ \text{mg}}\right)}{1\ \text{L}} = 115\ \mu\text{g/L}$$

The concentration of nitrobenzene in the QC sample will be 130 μg/L. Multiply the result by the RSD calculated in Step 2.1 to obtain the uncertainty.

$$\frac{(2.16\ \text{mg/mL})\ (60\ \mu\text{L})\left(\frac{1\ \text{mL}}{1000\ \mu\text{L}}\right)\left(\frac{1000\ \mu\text{g}}{1\ \text{mg}}\right)}{1\ \text{L}} = 130\ \mu\text{g/L}$$

8.5. Record the analyte concentrations in the QC sample in μg/L.

9. Proper Waste Disposal Practices

9.1. Solid Waste

9.1.1. Solid waste, such as paper wipes, glass or plastic pipettes, empty vials, and incorrectly spiked QC samples contaminated with organic compounds, is accumulated in a covered metal can lined with a plastic bag and is kept segregated from PCB-contaminated solid waste and solid waste that is not contaminated with organic compounds.

9.1.2. The can is labeled with a hazardous waste label and a label indicating its use for waste contaminated with organic compounds.

9.1.3. The can is opened only for the period of time necessary to add waste.

9.1.4. When the plastic bag is full, it is sealed with tape, removed from the can, identified as waste contaminated with organic compounds, and placed in a functioning chemical exhaust hood or in a closed secondary container pending pickup by the Waste Management Group.

9.1.5. A new plastic bag is put into the waste can for continued use.

9.2. Liquid Waste

9.2.1. Liquid waste containing organic compounds, such as rinses from syringes, excess QC samples, and incorrectly spiked QC samples, is accumulated in a covered metal can in a secondary containment tray.

9.2.1.1. Liquid waste containing organic compounds but no PCBs is kept segregated from PCB-contaminated liquid waste.

9.2.1.2. The can is labeled with a hazardous waste label and a label indicating its use for waste containing organic compounds.

9.2.1.3. When the can is full, it is capped and kept in the secondary containment tray pending pickup by the Waste Management Group.

9.2.1.4. A new can is labeled for future use.

9.2.2. Two-mL vials containing out-of-date spiking solutions of organic compounds are accumulated in a glass jar in a secondary containment tray.

9.2.2.1. Solutions which are not contaminated with PCBs are kept segregated from those which are PCB-contaminated.

9.2.2.2. The jar is labeled with a hazardous waste label and a label indicating its use for waste containing organic compounds.

9.2.2.3. The jar is opened only for the period of time necessary to add vials.

9.2.2.4 When the jar is full, it is capped and kept in the secondary containment tray pending pickup by the Waste Management Group.

9.2.2.5. A new jar is labeled for future use.

9.3. Waste Pickup

9.3.1. Pickup by the Waste Management Group of a full bag, can, or jar of waste contaminated with organic compounds is requested using the current Chemical Waste Disposal Request form. The current Waste Profile Request Form (WRPF) that describes the waste is referenced on the Chemical Waste Disposal Request.

9.3.2. The Waste Management Group picks up the waste for disposal according to Laboratory policy.

10. Source Materials

10.1. M. A. Gautier, E. S. Gladney, N. L. Koski, E. A. Jones, and B. T. O'Malley, "Quality Assurance for Health and Environmental Chemistry: 1990," Los Alamos National Laboratory report LA-12208-MS (1991).

10.2. M. A. Gautier, E. S. Gladney, N. L. Koski, E. A. Jones, and B. T. O'Malley, "Quality Assurance for Environmental Chemistry: 1991," Los Alamos National Laboratory report, LA-12436-MS (1992).

10.3. "Chemical, Hazardous, and Mixed Waste," Administrative Requirement 10-3, in *Environment, Safety, and Health Manual*, Los Alamos National Laboratory Manual, Chapter 1 (most recent edition).

TABLE I. SEMIVOLATILE ORGANIC COMPOUNDS

Analyte	CAS No.	Category	Density of liquid, (mg/μL)
acenaphthene	83329	Base/Neutral	solid
acenaphthylene	208968	Base/Neutral	0.899
aniline	62533	Base/Neutral	1.022
anthracene	120127	Base/Neutral	solid
azobenzene	103333	Base/Neutral	1.090
benz[a]anthracene	56553	Base/Neutral	solid
benzo[b]fluoranthene	205992	Base/Neutral	solid
benzo[k]fluoranthene	207089	Base/Neutral	solid
benzoic acid	65850	Acid	solid
benzo[g,h,i]perylene	191242	Base/Neutral	solid
benzo[a]pyrene	50328	Base/Neutral	solid
benzyl alcohol	100516	Base/Neutral	1.045
bis(2-chloroethoxy)methane	111911	Base/Neutral	solid
bis(2-chloroethyl)ether	111444	Base/Neutral	1.220
bis(2-chloroisopropyl)ether	108601	Base/Neutral	solid
bis(2-ethylhexyl) phthalate	117817	Base/Neutral	0.981
4-bromophenyl phenyl ether	101553	Base/Neutral	1.423
butyl benzyl phthalate	85687	Base/Neutral	0.966
4-chloroaniline	106478	Base/Neutral	solid
4-chloro-3-methylphenol	59507	Acid	solid
2-chloronaphthalene	91587	Base/Neutral	solid
2-chlorophenol	95578	Acid	1.241
4-chlorophenyl phenyl ether	7005723	Base/Neutral	solid
chrysene	218019	Base/Neutral	solid
di-n-butyl phthalate	84742	Base/Neutral	1.043
di-n-octyl phthalate	117840	Base/Neutral	0.981
dibenz[a,h]anthracene	53703	Base/Neutral	solid
dibenzofuran	132649	Base/Neutral	solid
1,2-dichlorobenzene	95501	Base/Neutral	1.306
1,3-dichlorobenzene	541731	Base/Neutral	1.288
1,4-dichlorobenzene	106467	Base/Neutral	1.241
2,4-dichlorophenol	120832	Acid	solid
diethyl phthalate	84662	Base/Neutral	1.118
2,4-dimethylphenol	105679	Acid	1.027
dimethyl phthalate	131113	Base/Neutral	1.190
4,6-dinitro-2-methylphenol	534521	Acid	solid
2,4-dinitrophenol	51285	Acid	solid

TABLE I. SEMIVOLATILE ORGANIC COMPOUNDS (cont)

Analyte	CAS No.	Category	Density of liquid, mg/μL
2,4-dinitrotoluene	121142	Base/Neutral	solid
2,6-dinitrotoluene	606202	Base/Neutral	solid
fluoranthene	206440	Base/Neutral	solid
fluorene	86737	Base/Neutral	solid
hexachlorobenzene	118741	Base/Neutral	solid
hexachlorobutadiene	87683	Base/Neutral	1.665
hexachlorocyclopentadiene	77474	Base/Neutral	1.702
hexachloroethane	67721	Base/Neutral	2.091
indeno[1,2,3-cd]pyrene	193395	Base/Neutral	solid
isophorone	78591	Base/Neutral	0.923
2-methylnaphthalene	91576	Base/Neutral	1.000
2-methylphenol	95487	Acid	1.048
4-methylphenol	106445	Acid	1.034
naphthalene	91203	Base/Neutral	solid
2-nitroaniline	88744	Base/Neutral	solid
3-nitroaniline	99092	Base/Neutral	solid
4-nitroaniline	100016	Base/Neutral	solid
nitrobenzene	98953	Base/Neutral	1.196
2-nitrophenol	88755	Acid	solid
4-nitrophenol	100027	Acid	solid
N-nitrosodiphenylamine	86306	Base/Neutral	solid
N-nitrosodi-n-propylamine	621647	Base/Neutral	solid
pentachlorophenol	87865	Acid	1.978
phenanthrene	85018	Base/Neutral	solid
phenol	108952	Acid	solid
pyrene	129000	Base/Neutral	solid
1,2,4-trichlorobenzene	120821	Base/Neutral	1.454
2,4,5-trichlorophenol	95954	Acid	solid
2,4,6-trichlorophenol	88062	Acid	solid

VOLATILE ORGANIC COMPOUNDS ON SOIL — QC SAMPLE PREPARATION

Analyte: Volatile organic compounds	**Method No.:** QCO250
Matrix: Ottawa sand	**Spike Range:** 100-200 μg/kg
Procedure: Analysis by purge and trap extraction, gas chromatography and mass spectrometry (PTGC)	**Accuracy and Precision:** 100% ± 2.0% RSD
Effective Date: 03/19/91	**Authors:** Nancy L. Koski Margaret A. Gautier

SAFETY NOTE: Before beginning this procedure, read all of the Material Safety Data Sheets for the chemicals listed in Sec. 5. Read Sec. 4.3 of the EM-9 Safety Manual for information on personal protective clothing and equipment. Read Sec. 9 of this procedure and Source Material 10.4 for proper waste disposal practices.

1. Principle of Method

1.1. Prepare a stock solution in methanol of 3 to 6 volatile organic compounds from the list in Table I.

1.2. Spike the stock solution into methanol.

1.3. The methanol stock dilution is spiked onto the soil matrix immediately before analysis.

2. Accuracy and Precision

2.1. The propagated error on QC preparation is based on the error of the standard and on the error associated with the use of the microsyringe, balance, and volumetric flask. A relative standard deviation (RSD) of 2.0% has been calculated for the error of the standard and for spiking, weighing, and dilution based on the following:

$$D1 = \frac{M1 \times M2}{M3} ,$$

$$D2 = \frac{\left(\frac{D1 \times M5}{(D1 \times M5) + M4}\right) \times M6}{M7},$$

$$D3 = \frac{(M3 \times M4)^2}{((M1 \times M2 \times M5) + (M3 \times M4))^2},$$

where D1 = first dilution calculated result,
D2 = final calculated result,
D3 = factor for percent relative standard deviation formula in section 2.1.2,
M1 = standard error,
M2 = weighing error,
M3 = dilution error,
M4 = first pipetting error,
M5 = second pipetting error,
M6 = third pipetting error, and
M7 = weighing error.

2.1.1. Calculate relative variance using the following equation:

$$R_M^2 = \frac{\sigma^2}{\overline{X}^2},$$

where R^2_M = relative variance,
M = $M_1 \ldots M_n$,
σ^2 = variance (std dev^2), and
$\overline{X}$ = mean value of each variable (M).

2.1.2. Calculate percent relative standard deviation using the following equation:

$$S_{D_T} = \sqrt{R^2_{M7} + R^2_{M6} + ((R^2_{M1} + R^2_{M2} + R^2_{M3} + R_{M4} + R_{M5}) \times D_3)} \times 100$$

where SD_T = relative standard deviation (% error),
R^2_{M1} = relative variance of standard,
R^2_{M2} = relative variance of balance,
R^2_{M3} = relative variance of volumetric flask,
R^2_{M4} = relative variance of first microsyringe,

R^2_{M5} = relative variance of second microsyringe,
R^2_{M6} = relative variance of third microsyringe,
R^2_{M7} = relative variance of balance,
D2 = factor above, and
100 = factor to convert to percentage.

2.2. Analytical results from samples prepared between 1990 and 1991 using this procedure and analyzed by purge-and-trap extraction, gas chromatography and mass spectrometry are summarized and tabulated below. The data are published in Source Materials 10.1 and 10.3.

VOLATILE ORGANIC COMPOUNDS ON SOIL RECOVERY DATA

Compound	1990 Mean	± SD	(n)	1991 Mean	± SD	(n)
Acetone		—		44	± 17	(27)
Benzene	64	± 30	(4)	34		(1)
Bromobenzene		—		92	± 18	(14)
Bromochloromethane	52		(1)		—	
Bromodichloromethane		—		103	± 25	(11)
Bromoform		—		95	± 26	(9)
Bromomethane		—			—	
2-Butanone (MEK)	110	± 72	(12)	52	± 22	(13)
n-Butylbenzene	24		(1)		—	
sec-Butylbenzene		—			—	
tert-Butylbenzene		—			—	
Carbon disulfide	34	± 14	(3)	37		(1)
Carbon tetrachloride	59	± 34	(5)	102	± 48	(11)
Chlorobenzene	53	± 23	(9)	85	± 18	(15)
Chlorodibromomethane	57	± 29	(5)	97	± 22	(17)
Chloroethane		—			—	
Chloroform		—		79	± 28	(8)
2-Chlorotoluene		—		88	± 36	(6)
4-Chlorotoluene		—			—	
1,2-Dibromo-3-chloropropane		—			—	
1,2-Dibromoethane	29		(2)		—	
Dibromomethane		—		82	± 23	(8)
1,2-Dichlorobenzene		—		94	± 11	(11)
1,3-Dichlorobenzene		—			—	
1,4-Dichlorobenzene	9		(1)	57	± 9	(4)
1,1-Dichloroethane	56	± 21	(8)	26	± 16	(3)
1,2-Dichloroethane	66	± 25	(10)	97	± 42	(14)
1,1-Dichloroethene		—			—	

VOLATILE ORGANIC COMPOUNDS ON SOIL RECOVERY DATA (cont)						
	1990			1991		
Compound	Mean	± SD	(n)	Mean	± SD	(n)
cis-1,2-Dichloroethene		—			—	
trans-1,2-Dichloroethene		—			—	
1,2-Dichloropropane	77		(1)	73	± 38	(7)
1,3-Dichloropropane		—			—	
2,2-Dichloropropane		—			—	
1,1-Dichloropropene		—			—	
cis-1,3-Dichloropropene	36	± 22	(5)		—	
trans-1,3-Dichloropropene	93	± 51	(5)		—	
Ethylbenzene	51	± 24	(11)	76	± 31	(9)
2-Hexanone	138	± 67	(8)	69	± 22	(9)
Isopropylbenzene		—			—	
p-Isopropyltoluene		—			—	
Methylene chloride		—		83	± 53	(27)
4-Methyl-2-pentanone (MIK)		—		94	± 20	(14)
n-Propylbenzene	32		(1)	67	± 22	(5)
Styrene	36		(2)	84	± 22	(14)
1,1,1,2-Tetrachloroethane	57		(1)	85	± 18	(5)
1,1,2,2-Tetrachloroethane		—		104	± 16	(11)
Tetrachloroethene	46	± 24	(12)	75	± 28	(15)
Toluene	53	± 28	(11)	71	± 24	(15)
1,1,1-Trichloroethane	48	± 29	(3)	98	± 45	(15)
1,1,2-Trichloroethane	67	± 32	(10)	86	± 21	(24)
Trichloroethene	42	± 28	(5)	71	± 26	(9)
Trichlorofluoromethane		—			—	
1,2,3-Trichloropropane		—		89	± 15	(5)
1,2,4-Trimethylbenzene	39		(1)	84	± 17	(8)
1,3,5-Trimethylbenzene		—			—	
Vinyl acetate	48	± 43	(5)	68		(2)
Mixed xylenes (total)	35		(1)	80	± 19	(5)

3. Collection and Storage of Samples

3.1. Ottawa sand is used as a blank soil matrix.

3.2. The QC spiking solution is refrigerated pending use. The maximum holding time for the analysis of volatile of organics on soil is 14 days.

4. Apparatus

4.1. Volumetric flasks: 5-mL, class A, glass.

4.2. Syringes: gas-tight, 10-, 25-, 50-, 100-, and 2500-μL.

4.3. Microspatula.

4.4. Pipettes: Pasteur, disposable, glass.

4.5. Pipette bulb: rubber, to fit Pasteur pipette.

4.6. Vials: 1.5-mL, glass, amber.

4.7. Caps: open-top, to fit vials.

4.8. Septa: Teflon/silicone discs to fit open-top caps.

4.9. Teflon tape.

4.10. Autosampler vials with Teflon-lined septa and crimp-tops: 11- x 30-mm vials and 11-mm silicone cap liner with Teflon face.

4.11. Portable crimper for sealing caps on autosampler vials.

4.12. Decapper for removing caps from autosampler vials.

4.13. Analytical balance, 100-g minimum capacity, 0.1-mg accuracy.

4.14. Laboratory oven: capable of sustaining 100-150°C.

4.15. Labels printed with QC sample numbers.

5. Reagents

5.1. Methanol (reagent-grade).

5.2. Ottawa sand: a clean, dry 5.0-g aliquot is required for each sample.

5.2.1. Standard quality Ottawa sand, graded to 20-30 mesh and used for preparing cement tensile-strength samples, meets ASTM C190 specifications.

5.2.2. Ottawa sand heated to nominally 500°C for a minimum of 2 h is used as a sample matrix.

6. Calibration and Standards

6.1. Prepare a stock solution of neat, standard-grade volatile analytes chosen from Table I. Use Chem Service or equivalent chemicals (Chem Service, Inc., Box 3108, West Chester, PA 19381). Add solid analytes first, then liquid analytes after the addition of solvent.

6.1.1. Add 8-12 mg of a solid volatile analyte to a clean, tared 5.0-mL volumetric flask. Record the mass and tare the balance. Repeat for each solid analyte.

6.1.2. Add approximately 3 mL of methanol to the flask, stopper the flask, and swirl it to dissolve the analytes.

6.1.3. Place the stoppered flask on the analytical balance and tare the balance.

6.1.4. Calculate the volumes of liquid analytes needed to reach a weight spike range of 8-12 mg in 5 mL of stock solution. See Step 8.1.

6.1.5. Add a liquid analyte from a gas-tight syringe just above the surface of the methanol. Stopper the flask and record the mass and volume of the analyte added. Tare the balance. Repeat for each liquid analyte added.

6.1.6. Dilute the solution to volume with methanol.

6.1.7. Mix by gently inverting three times.

NOTE: Vigorous shaking will cause the loss of volatile analytes.

6.1.8. Discard the solution in the neck of the flask to minimize concentration changes due to loss of volatile analytes from the surface of the solution.

6.1.9. The concentration of analytes in the stock solution will be between 1.5 - 2.5 mg/mL.

6.1.10. Transfer the stock solution to 1.5-mL amber vials fitted with Teflon septa and caps. Wrap Teflon tape over and around the caps.

6.1.11. Label the vials with information identifying the standard and with the expiration date.

6.1.12. The stock solution is stable for approximately three months when stored at -20°C.

6.2. Prepare additional stock solutions using different analytes from Table I. The number of analytes in the QC samples may be increased by using more than one stock solution to prepare the QC spiking solution.

7. Procedure

7.1. Cleaning glassware.

7.1.1. Wash volumetric flasks with detergent and rinse with hot tap water and then with methanol.

7.1.2. Store the glassware in a laboratory oven maintained at 100-150°C to minimize contamination.

7.2. Cleaning syringes.

7.2.1. Dedicate a group of syringes for use only with volatile analytes.

7.2.2. Fill the syringe through the needle with methanol. Discard the methanol into a waste container. Repeat for a total of 5-10 times.

7.2.3. Dry the syringe by pulling a vacuum on it for at least 10 min.

7.3. Prepare QC samples to equal at least 10% of the total number of samples to be analyzed.

7.3.1. Remove one or more vials of volatile stock standard from the freezer and allow them to reach room temperature. Do not allow the vials to sit at room temperature for longer than 2 h before preparing the QC spiking solution.

7.3.2. Using a gas-tight syringe, add 1500 μL of methanol to an autosampler vial to be used as a matrix for the QC spiking solution.

7.3.3. Seal the vial with a septum and crimp the top.

7.3.4. Spike a volume of stock standard, through the septum and below the surface of the methanol, to reach a concentration range of 75-150 μg/1.5 mL for each analyte in the QC spiking solution.

7.3.5. More than one stock standard may be spiked into the methanol to increase the number of analytes in the QC sample.

7.3.6. Replace the punctured septum and cap from the autosampler vial with a new septum and cap.

7.3.7. Label the vial with a QC sample number.

7.3.8. Include directions for the analyst to spike 10 μL of the QC spiking solution onto 5.0 g of preheated Ottawa sand just before analysis.

7.3.9. Return the stock standard to the freezer.

7.4. Refrigerate the QC spiking solution pending use. The maximum holding time for a volatile QC spiking solution for soil is 14 days.

7.5. The analyst will spike 10 μL of the QC spiking solution onto an accurately weighed 5.0 g aliquot of preheated Ottawa sand just before analysis.

7.6. Calculate the analyte concentrations in the QC sample in μg/kg based on a 10 μL aliquot of the QC spiking solution on 5.0000 g of preheated Ottawa sand.

7.7. Record QC standard information, sample number, sample description, spike amount, concentration, uncertainty, and all calculations in the QC Laboratory notebook and enter them into the CVS and CVD databases on the VAX.

8. Calculations

8.1. Calculate the volume of neat liquid analyte needed to prepare a stock solution in the range of 8-12 mg/5 mL.

8.1.1. Read the density of the neat liquid analyte from Table I. The density of toluene is 0.867 mg/μL.

8.1.2. The desired weight spike range for 5 mL of stock solution is 8-12 mg of neat analyte.

8.1.3. Divide the weight spike range by the density of the neat analyte to determine the desired volume spike range of neat analyte to use in 5 mL of stock solution.

$$\frac{8\ \text{mg}}{0.867\ \text{mg}/\mu\text{L}} \text{ to } \frac{12\ \text{mg}}{0.867\ \text{mg}/\mu\text{L}} = 9.2 \text{ to } 13.8\ \mu\text{L}$$

For toluene, between 9.2 and 13.8 μL of the neat analyte should be diluted to 5 mL to reach the desired concentration range of 1.5 - 2.5 mg/mL in the stock solution.

8.2. Calculate the concentration of each analyte in the stock solution as in the following example.

8.2.1. If 12 μL of toluene, weighing 10.4 mg, is diluted in 5 mL of stock solution, the concentration of toluene in the stock solution is 2.08 mg/mL.

$$\frac{10.4 \text{ mg}}{5 \text{ mL}} = 2.08 \text{ mg/mL}$$

8.3. Calculate the concentration of each analyte in the QC spiking solution as in the following example.

8.3.1. The final volume of the QC spiking solution is the total of 1500 μL of methanol plus the volumes of all the QC spiking solutions added to the methanol.

8.3.2. If 60 μL of a stock solution containing 2.08 mg/mL of toluene and 50 μL of a second QC stock solution are both added to 1500 μL of methanol in an autosampler vial, the concentration of toluene in the QC spiking solution is 0.0775 μg/μL.

$$\frac{(2.08 \text{ mg/mL}) \left(\frac{1 \text{ mL}}{1000 \ \mu\text{L}}\right) (60 \ \mu\text{L}) \left(\frac{1000 \ \mu\text{g}}{1 \text{ mg}}\right)}{1500 \ \mu\text{L} + 60 \ \mu\text{L} + 50 \ \mu\text{L}} = 0.0775 \ \frac{\mu\text{g}}{\mu\text{L}}$$

8.4. Calculate the concentration of each analyte in the QC sample as in the following example.

8.4.1. When the analyst spikes 10 μL of the QC spiking solution containing 0.0775 μg/μL toluene onto 5.0000 g of preheated Ottawa sand, the concentration of toluene in the resulting QC sample will be 155 μg/kg. Multiply the result by the RSD calculated in Step 2.1 to obtain the uncertainty.

$$\frac{(0.0775 \ \mu\text{g}/\mu\text{L}) \ (10 \ \mu\text{L})}{(5.0000 \text{ g}) \ (\text{kg}/1000 \text{ g})} = 155 \ \mu\text{g/kg}$$

8.5. Record the analyte concentrations in the QC sample in μg/kg based on the analyst spiking a 10-μL aliquot of the QC spiking solution on 5.0000 g of preheated Ottawa sand.

9. Proper Waste Disposal Practices

9.1. Solid waste.

9.1.1. Solid waste, such as paper wipes, glass or plastic pipettes, empty vials, and incorrectly spiked QC samples contaminated with organic compounds, is accumulated in a covered metal can lined with a plastic bag and is kept segregated from PCB-contaminated solid waste and solid waste that is not contaminated with organic compounds.

9.1.2. The can is labeled with a hazardous waste label and a label indicating its use for waste contaminated with organic compounds.

9.1.3. The can is opened only for the period of time necessary to add waste.

9.1.4. When the plastic bag is full, it is sealed with tape, removed from the can, identified as waste contaminated with organic compounds, and placed in a functioning chemical exhaust hood or in a closed secondary container pending pickup by the Waste Management Group.

9.1.5. A new plastic bag is put into the waste can for continued use.

9.2. Liquid waste.

9.2.1. Liquid waste containing organic compounds, such as rinses from syringes, excess QC samples, and incorrectly spiked QC samples, is accumulated in a covered metal can in a secondary containment tray.

9.2.1.1. Liquid waste containing organic compounds but no PCBs is kept segregated from PCB-contaminated liquid waste.

9.2.1.2. The can is labeled with a hazardous waste label and a label indicating its use for waste containing organic compounds.

9.2.1.3. When the can is full, it is capped and kept in the secondary containment tray pending pickup by the Waste Management Group.

9.2.1.4. A new can is labeled for future use.

9.2.1. Two-mL vials containing out-of-date spiking solutions of organic compounds are accumulated in a glass jar in a secondary containment tray.

9.2.2.1. Solutions that are not contaminated with PCBs are kept segregated from those that are PCB-contaminated.

9.2.2.2. The jar is labeled with a hazardous waste label and a label indicating its use for waste containing organic compounds.

9.2.2.3. The jar is opened only for the period of time necessary to add vials.

9.2.2.4 When the jar is full, it is capped and kept in the secondary containment tray pending pickup by the Waste Management Group.

9.2.2.5. A new jar is labeled for future use.

9.3. Waste pickup.

9.3.1. Pickup by the Waste Management Group of a full bag, can, or jar of waste contaminated with organic compounds is requested using the current Chemical Waste Disposal Request form. The current Waste Profile Request Form (WRPF) that describes the waste is referenced on the Chemical Waste Disposal Request.

9.3.2. The Waste Management Group picks up the waste for disposal according to Laboratory policy.

10. Source Materials

10.1. M. A. Gautier, E. S. Gladney, N. L. Koski, M. B. Phillips, E. A. Jones, and B. T. O'Malley, "Quality Assurance for Health and Environmental Chemistry: 1989," Los Alamos National Laboratory report LA-11995-MS (1990).

10.2. M. A. Gautier, E. S. Gladney, N. L. Koski, E. A. Jones, and B. T. O'Malley, "Quality Assurance for Health and Environmental Chemistry: 1990," Los Alamos National Laboratory report LA-12208-MS (1991).

10.3. M. A. Gautier, E. S. Gladney, N. L. Koski, E. A. Jones, and B. T. O'Malley, "Quality Assurance for Enviromental Chemistry: 1991," Los Alamos National Laboratory report LA-12436-MS (1992).

10.4. "Chemical, Hazardous, and Mixed Waste," Administrative Requirement 10-3, in *Environment, Safety, and Health Manual*, Los Alamos National Laboratory Manual, Chapter 1 (most recent edition).

TABLE I. VOLATILE ORGANIC COMPOUNDS

Compound	CAS Number	Density of liquids (mg/μL)
acetone	67641	0.791
benzene	71432	0.874
bromobenzene	108861	1.491
bromochloromethane	74975	1.991
bromodichloromethane	75274	1.980
bromoform	75252	2.894
bromomethane	74839	0.838
2-butanone (MEK)	78933	0.805
n-butylbenzene	104518	0.860
sec-butylbenzene	135988	0.863
tert-butylbenzene	98066	0.867
carbon disulfide	75150	1.266
carbon tetrachloride	56235	1.594
chlorobenzene	108907	1.107
chlorodibromomethane	124481	2.451
chloroethane	75003	0.891
chloroform	67663	1.492
2-chlorotoluene	95498	1.083
4-chlorotoluene	106434	1.070
1,2-dibromo-3-chloropropane	96128	2.093
1,2-dibromoethane	106934	2.180
dibromomethane	74953	2.477
1,2-dichlorobenzene	95501	1.306
1,3-dichlorobenzene	541731	1.288
1,4-dichlorobenzene	106467	1.241
1,1-dichloroethane	75343	1.176
1,2-dichloroethane	107062	1.256
1,1-dichloroethene	75354	1.213
cis-1,2-dichloroethene	156592	1.284
trans-1,2-dichloroethene	156605	1.257
1,2-dichloropropane	78875	1.156
1,3-dichloropropane	142289	1.190
2,2-dichloropropane	594207	1.082
1,1-dichloropropene	563586	1.169
cis-1,3-dichloropropene	10061015	1.224
trans-1,3-dichloropropene	10061026	1.224
ethylbenzene	100414	0.867
2-hexanone	591786	0.812

TABLE I. VOLATILE ORGANIC COMPOUNDS (cont)

Compound	CAS Number	Density of liquids (mg/μL)
isopropylbenzene	98828	0.864
4-isopropyltoluene	99876	0.860
methylene chloride	75092	1.325
4-methyl-2-pentanone (MIK)	108101	0.800
n-propylbenzene	103651	0.862
styrene	100425	0.909
1,1,1,2-tetrachloroethane	630206	1.598
1,1,2,2,-tetrachloroethane	79345	1.586
tetrachloroethene	127184	1.623
toluene	108883	0.867
1,1,1-trichloroethane	71556	1.338
1,1,2-trichloroethane	79005	1.435
trichloroethene	79016	1.464
trichlorofluoromethane	75694	1.494
1,2,3-trichloropropane	96184	1.387
1,2,4-trimethylbenzene	95636	0.889
1,3,5-trimethylbenzene	108678	0.864
vinyl acetate	108054	0.934
mixed xylenes (total)	1330207	0.860

VOLATILE ORGANIC COMPOUNDS IN WATER—QC SAMPLE PREPARATION

Analyte: Volatile organic compounds	**Method No.:** QCO260
Matrix: Water	**Range:** 30-150 μg/L
Procedure: Analysis by purge-and-trap extraction, gas chromatography, and mass spectrometry (PTGC)	**Accuracy and Precision:** 100% ± 5.3% RSD
Effective Date: 04/25/90	**Authors:** Nancy L. Koski Margaret A. Gautier

SAFETY NOTE: Before beginning this procedure, read all of the Material Safety Data Sheets for the chemicals listed in Sec. 5. Read Sec. 4.3 of the EM-9 Safety Manual for information on personal protective clothing and equipment. Read Sec. 9 of this procedure and Source Material 10.4 for proper waste disposal practices.

1. Principle of Method

1.1. Prepare a stock solution in methanol of 3-6 volatile organic compounds from the list in Table I.

1.2. Prepare a 1:20 dilution in methanol of the stock solution.

1.3. Spike the diluted standard into distilled water.

2. Accuracy and Precision

2.1. The propagated error on QC preparation is based on the error of the standard and on the error associated with the use of the microsyringe, balance, and volumetric flask. A relative standard deviation of 5.3% has been calculated for standard preparation and for weighing, spiking, and dilution based on the following:

$$D = \frac{M1 \times M2 \times M4 \times M6}{M3 \times M5 \times M7},$$

where D = calculated result,
M1 = standard error,
M2 = weighing error,
M3 = first dilution error,
M4 = first pipette error,
M5 = second dilution error,

M6 = second pipette error, and
M7 = third dilution error.

2.1.1. Calculate relative variance for each variable using the following equation.

$$R_M^2 = \frac{\sigma^2}{\overline{X}^2} ,$$

where R^2_M = relative variance,
M = $M_1 \ldots M_n$ (variable),
σ^2 = variance (std dev^2), and
$\overline{X}$ = mean value of each variable (M).

2.1.2. Calculate percent relative standard deviation using the following equation.

$$S_{D_T} = \sqrt{R_{M1}^2 + R_{M2}^2 + R_{M3}^2 + R_{M4}^2 + R_{M5}^2 + R_{M6}^2 + R_{M7}^2} \times 100 ,$$

where S_{D_T} = relative standard deviation (% error),
R^2_{M1} = relative variance of standard,
R^2_{M2} = relative variance of balance,
R^2_{M3} = relative variance of first volumetric flask,
R^2_{M4} = relative variance of first microsyringe,
R^2_{M5} = relative variance of second volumetric flask,
R^2_{M6} = relative variance of second microsyringe,
R^2_{M7} = relative variance of third volumetric flask, and
100 = factor to convert to percentage.

2.2. Analytical results from QC samples prepared between 1990 and 1991 using this procedure and analyzed by purge-and-trap extraction, gas chromatography, and mass spectrometry are summarized and tabulated below. The data are published in Source Materials 10.1 to 10.3.

VOLATILE ORGANIC COMPOUNDS IN WATER SPIKE RECOVERY DATA

Compound	1990 Mean	±	SD	(n)	1991 Mean	±	SD	(n)
Acetone		—			95	±	8	(17)
Benzene	94	±	30	(13)	88			(1)
Bromobenzene		—			98	±	6	(9)
Bromochloromethane	110			(10)		—		
Bromodichloromethane		—			131			(2)
Bromoform	61			(1)	102	±	8	(8)
Bromomethane		—				—		
2-Butanone (MEK)	90	±	58	(19)	56	±	20	(3)
n-Butylbenzene		—				—		
sec-Butylbenzene		—				—		
tert-Butylbenzene		—				—		
Carbon disulfide	98	±	62	(14)	75	±	27	(4)
Carbon tetrachloride	76	±	12	(8)	89	±	22	(3)
Chlorobenzene	85	±	18	(20)	85	±	5	(10)
Chlorodibromomethane	82	±	22	(10)	95	±	15	(9)
Chloroethane		—				—		
Chloroform		—			100	±	13	(3)
2-Chlorotoluene		—			78	±	12	(4)
4-Chlorotoluene		—				—		
1,2-Dibromo-3-chloropropane		—				—		
1,2-Dibromoethane	108			(1)		—		
Dibromomethane		—			106	±	11	(3)
1,2-Dichlorobenzene		—			74			(2)
1,3-Dichlorobenzene		—				—		
1,4-Dichlorobenzene	64			(2)		—		
1,1-Dichloroethane	104	±	27	(22)	85	±	10	(4)
1,2-Dichloroethane	102	±	14	(16)	120	±	36	(9)
1,1-Dichloroethene		—				—		
cis-1,2-Dichloroethene		—				—		
trans-1,2-Dichloroethene		—				—		
1,2-Dichloropropane	96	±	20	(3)	86	±	13	(10)
1,3-Dichloropropane		—				—		
2,2-Dichloropropane		—				—		
1,1-Dichloropropene		—				—		
cis-1,3-Dichloropropene	52	±	10	(13)		—		
trans-1,3-Dichloropropene	169	±	35	(13)		—		
Ethylbenzene	78	±	18	(22)	75	±	10	(10)
2-Hexanone	94	±	43	(23)	72	±	32	(8)

VOLATILE ORGANIC COMPOUNDS IN WATER
SPIKE RECOVERY DATA (cont)

Compound	1990 Mean	± SD	(n)	1991 Mean	± SD	(n)
Isopropylbenzene	—			—		
p-Isopropyltoluene	—			—		
Methylene chloride	—			80	± 23	(14)
4-Methyl-2-pentanone (MIK)	—			84	± 12	(5)
n-Propylbenzene	—			53	± 16	(4)
Styrene	77		(2)	67	± 19	(5)
1,1,1,2-Tetrachloroethane	97		(2)	87	± 5	(4)
1,1,2,2-Tetrachloroethane	—			—		
Tetrachloroethene	77	± 19	(19)	74	± 7	(9)
Toluene	80	± 19	(20)	75	± 4	(9)
1,1,1-Trichloroethane	85	± 24	(11)	86	± 16	(6)
1,1,2-Trichloroethane	94	± 10	(19)	95	± 8	(17)
Trichloroethene	76	± 9	(7)	82	± 5	(4)
Trichlorofluoromethane	—			—		
1,2,3-Trichloropropane	—			106	± 5	(4)
1,2,4-Trimethylbenzene	—			48	± 27	(3)
1,3,5-Trimethylbenzene	—			—		
Vinyl acetate	56	± 40	(8)	—		
Mixed xylenes	326		(1)	63	± 16	(4)

3. Collection and Storage of Samples

3.1. Distilled water purged with nitrogen gas is used as the blank matrix for spiking. Use water that has not come into contact with plastic tubing or plastic holding vessels because phthalates may leach from plastics and contaminate the sample.

3.2. Spiked QC samples are refrigerated pending analysis. The maximum holding time for volatile organic compounds in water QC samples is seven days. Preservation with HCl increases the holding time to 14 days.

4. Apparatus

4.1. Volumetric flasks: 5- and 50-mL, class A, glass.

4.2. Autopipette: 1000-μL, Rainin, or equivalent.

4.3. Pipette tips: disposable.

4.4. Syringes: gas-tight, 10-, 25-, 50-, 100-, and 500-μL.

4.5. Microspatula.

4.6. Pipettes: Pasteur, disposable, glass.

4.7. Pipette bulb: rubber, to fit Pasteur pipette.

4.8. Vials: 1.5-mL, glass, amber.

4.9. Caps: open-top, to fit vials.

4.10. Septa: Teflon/silicone discs to fit open-top caps.

4.11. Teflon tape.

4.12. Vials: 40-mL, zero headspace, with open-top screw caps with Teflon/silicone septa, pre-cleaned.

4.13. Analytical balance: 100-g minimum capacity, 0.1-mg accuracy.

4.14. Laboratory oven: capable of sustaining 100-150°C.

4.15. Bottle: gas-washing, with fritted dispersion disc, 500-mL minimum capacity.

4.16. Tubing and adapters: Teflon, to connect gas-washing bottle to nitrogen gas cylinder.

4.17. Labels printed with QC sample numbers.

5. Reagents

5.1. Methanol (analytical-grade).

5.2. Hydrochloric acid (concentrated, reagent-grade).

5.3. Nitrogen gas (high-purity) in a compressed gas cylinder.

6. Calibration and Standards

6.1. Prepare a stock solution of neat, standard-grade volatile analytes chosen from Table I. Use Chem Service or equivalent chemicals (Chem Service, Inc., Box 3108, West Chester, PA 19381). Add solid analytes first, then liquid analytes after the addition of solvent.

6.1.1. Add 8-12 mg of a solid volatile analyte to a clean, tared 5.0-mL volumetric flask. Record the mass and tare the balance. Repeat for each analyte.

6.1.2. Add approximately 3 mL of methanol to the flask, stopper the flask, and swirl it to dissolve the analytes.

6.1.3. Place the stoppered flask on the analytical balance and tare the balance.

6.1.4. Calculate the volumes of liquid analytes needed to reach a weight spike range of 8-12 mg in 5 mL of stock solution. See Step 8.1.

6.1.5. Add a liquid analyte from a syringe just above the surface of the methanol. Stopper the flask and record the mass and volume of the analyte added. Tare the balance. Repeat for each liquid analyte added.

6.1.6. Dilute the solution to volume with methanol.

6.1.7. Mix by gently inverting three times.

NOTE: Vigorous shaking will cause the loss of volatile analytes.

6.1.8. Discard the solution in the neck of the flask to minimize concentration changes due to loss of volatile analytes from the surface of the solution.

6.1.9. The concentration of analytes in the stock solution will be 1.5 - 2.5 mg/mL.

6.1.10. Transfer the stock solution to 1.5-mL amber vials fitted with Teflon septa and caps. Wrap Teflon tape over and around the caps.

6.1.11. Label the vials with information identifying the standard and with the expiration date.

6.1.12. The stock solution is stable for approximately three months when stored at -20°C.

6.2. Prepare additional stock solutions using different analytes from Table I. The number of analytes in the QC samples may be increased by combining the stocks in a 1:20 dilution.

6.3. Prepare a 1:20 dilution of the stock solution.

6.3.1. Add approximately 4 mL of methanol to a clean 5-mL volumetric flask.

6.3.2. Add 250 μL of a stock solution from a syringe just above the surface of the methanol. Repeat for each stock solution to be combined in the 1:20 dilution.

6.3.3. Dilute the solution to volume with methanol.

6.3.4. Mix by gently inverting three times.

NOTE: Vigorous shaking will cause the loss of volatile analytes.

6.3.5. Discard the solution in the neck of the flask to minimize concentration changes due to the loss of volatile analytes from the surface of the solution.

6.3.6. The concentration of analytes in the dilution will be 0.075-0.125 mg/mL.

6.3.7. Transfer the dilution to 1.5-mL amber vials fitted with Teflon septa and caps. Wrap Teflon tape over and around the cap.

6.3.8. Label the vials with information identifying the standard and with the expiration date.

6.3.9. The standard dilution is stable for approximately three months when stored at -20°C.

7. Procedure

7.1. Cleaning glassware.

7.1.1. Wash volumetric flasks with detergent and rinse with hot tap water and then with methanol.

7.1.2. Store the glassware in a laboratory oven maintained at 100-150°C to minimize contamination.

7.2. Cleaning syringes.

7.2.1. Dedicate a group of syringes for use only with volatile analytes.

7.2.2. Fill the syringe through the needle with methanol. Discard the methanol into a waste container. Repeat for a total of 5-10 times.

7.2.3. Dry the syringe by pulling a vacuum on it for at least 10 min.

7.3. Prepare QC samples to equal at least 10% of the total number of samples to be analyzed.

7.3.1. Remove a vial of a 1:20 dilution of volatile stock standards from the freezer and allow it to reach room temperature. Do not let the vial sit at room temperature for longer than 2 h before spiking the QC sample.

7.3.2. Put 100-200 mL of distilled water into a gas-washing bottle fitted with a fritted gas-dispersion disc and connected to a nitrogen purge-gas tank. Use only distilled water that has not been stored in plastic or run through plastic tubing. Purge the water with nitrogen gas for at least 15 min to remove any volatile compounds dissolved in the water.

7.3.3. Add approximately 45 mL of the purged water to the 50-mL volumetric flask. Add 0.5 mL of concentrated HCl to the water as a preservative for the QC sample.

7.3.4. Spike a volume of a 1:20 dilution of a standard below the surface of the water to reach the desired spike range. Spike near the bottom of the flask using a syringe.

7.3.5 Dilute the solution to volume with purged water.

7.3.6. Mix by gently inverting three times.

NOTE: Vigorous shaking will cause the loss of volatile analytes.

7.3.7. Discard the solution in the neck of the flask to minimize concentration changes due to the loss of volatile analytes from the surface of the solution.

7.3.8. Pour the sample into a 40-mL glass, zero-headspace vial leaving zero headspace. Discard the excess sample.

7.3.9. Label the vial with a QC sample number.

7.3.10. Return the 1:20 dilution of the standard to the freezer.

7.3.11. Refrigerate the QC sample pending analysis. The maximum holding time for volatile organic compounds in water QC samples preserved with HCl is 14 days.

7.4. Record QC standard information, sample number, sample description, spike amount, concentration, uncertainty, and all calculations in the QC Laboratory notebook and enter them into the CVS and CVD databases on the VAX.

8. Calculations

8.1. Calculate the volume of neat liquid analyte needed to prepare a stock solution in the range of 8-12 mg/5 mL.

8.1.1. Read the density of the neat liquid analyte from Table I. The density of toluene is 0.867 mg/μL.

8.1.2. The desired weight spike range for 5 mL of stock solution is 8-12 mg of neat analyte.

8.1.3. Divide the weight spike range by the density of the neat analyte to determine the desired volume spike range of neat analyte to use in 5 mL of stock solution.

$$\frac{8\ \text{mg}}{0.867\ \text{mg}/\mu\text{L}} \text{ to } \frac{12\ \text{mg}}{0.867\ \text{mg}/\mu\text{L}} = 9.2 \text{ to } 13.8\ \mu\text{L}$$

For toluene, between 9.2 and 13.8 μL of the neat analyte should be diluted to 5 mL to reach the desired concentration range of 1.5 - 2.5 mg/mL in the stock solution.

8.2. Calculate the concentration of each analyte in the stock solution as in the following example.

8.2.1. If 12 μL of toluene, weighing 10.4 mg, is diluted to 5 mL of stock solution, the concentration of toluene in the stock solution is 2.08 mg/mL.

$$\frac{10.4\ \text{mg}}{5\ \text{mL}} = 2.08\ \text{mg/mL}$$

8.3. Calculate the concentration of each analyte in the 1:20 dilution of the stock solution as in the following example.

8.3.1. If 250 μL of a stock solution containing 2.08 mg/mL of toluene is diluted to 5 mL with methanol, the concentration of toluene in the 1:20 stock dilution is 0.104 μg/μL.

$$\frac{(2.08\ \text{mg/mL})\ (\frac{1\ \text{mL}}{1000\ \mu\text{L}})\ (\frac{1000\ \mu\text{g}}{1\ \text{mg}})\ (250\ \mu\text{L})}{(5\ \text{mL})\ (\frac{1000\ \mu\text{L}}{1\ \text{mL}})} = 0.104\ \mu\text{g}/\mu\text{L}$$

8.4. Calculate the concentration of each analyte in the QC water sample as in the following example.

8.4.1. If 30 μL of a 1:20 stock dilution containing 0.104 μg/μL of toluene is spiked into 50 mL of distilled water, the concentration of toluene in the sample is 62 μg/L. Multiply the result by the RSD calculated in Step 2.1. to obtain the uncertainty.

$$\frac{(0.104\ \mu\text{g}/\mu\text{L})\ (30\ \mu\text{L})}{(50\ \text{mL})\left(\frac{1\ \text{L}}{1000\ \text{mL}}\right)} = 62\ \mu\text{g/L}$$

8.5. Record the analyte concentration in the QC sample in μg/L.

9. Proper Waste Disposal Practices

9.1. Solid waste

9.1.1. Solid waste, such as paper wipes, glass or plastic pipettes, empty vials, and incorrectly spiked QC samples contaminated with organic compounds, is accumulated in a covered metal can lined with a plastic bag and is kept segregated from PCB-contaminated solid waste and solid waste that is not contaminated with organic compounds.

9.1.2. The can is labeled with a hazardous waste label and a label indicating its use for waste contaminated with organic compounds.

9.1.3. The can is opened only for the period of time necessary to add waste.

9.1.4. When the plastic bag is full, it is sealed with tape, removed from the can, identified as waste contaminated with organic compounds, and placed in a functioning chemical exhaust hood or in a closed secondary container pending pickup by the Waste Management Group.

9.1.5. A new plastic bag is put into the waste can for continued use.

9.2. Liquid waste

9.2.1. Liquid waste containing organic compounds, such as rinses from syringes, excess QC samples, and incorrectly spiked QC samples, is accumulated in a covered metal can in a secondary containment tray.

9.2.1.1. Liquid waste containing organic compounds but no PCBs is kept segregated from PCB-contaminated liquid waste.

9.2.1.2. The can is labeled with a hazardous waste label and a label indicating its use for waste containing organic compounds.

9.2.1.3. When the can is full, it is capped and kept in the secondary containment tray pending pickup by the Waste Management Group.

9.2.1.4. A new can is labeled for future use.

9.2.1. Two-mL vials containing out-of-date spiking solutions of organic compounds are accumulated in a glass jar in a secondary containment tray.

9.2.2.1. Solutions that are not contaminated with PCBs are kept segregated from those that are PCB-contaminated.

9.2.2.2. The jar is labeled with a hazardous waste label and a label indicating its use for waste containing organic compounds.

9.2.2.3. The jar is opened only for the period of time necessary to add vials.

9.2.2.4 When the jar is full, it is capped and kept in the secondary containment tray pending pickup by the Waste Management Group.

9.2.2.5. A new jar is labeled for future use.

9.3. Waste pickup

9.3.1. Pickup by the Waste Management Group of a full bag, can, or jar of waste contaminated with organic compounds is requested using the current Chemical Waste Disposal Request form. The current Waste Profile Request Form (WRPF) that describes the waste is referenced on the Chemical Waste Disposal Request.

9.3.2. The Waste Management Group picks up the waste for disposal according to Laboratory policy.

10. Source Materials

10.1. M. A. Gautier, E. S. Gladney, N. L. Koski, M. B. Phillips, E. A. Jones, and B. T. O'Malley, "Quality Assurance for Health and Environmental Chemistry: 1989," Los Alamos National Laboratory report LA-11995-MS (1990).

10.2. M. A. Gautier, E. S. Gladney, N. L. Koski, E. A. Jones, and B. T. O'Malley, "Quality Assurance for Health and Environmental Chemistry: 1990," Los Alamos National Laboratory report LA-12208-MS (1991).

10.3. M. A. Gautier, E. S. Gladney, N. L. Koski, E. A. Jones, and B. T. O'Malley, "Quality Assurance for Environmental Chemistry: 1991," Los Alamos National Laboratory report LA-12436-MS (1992).

10.4. "Chemical, Hazardous, and Mixed Waste," Administrative Requirement 10-3, in *Environment, Safety, and Health Manual*, Los Alamos National Laboratory Manual, Chapter 1 (most recent edition).

TABLE I. VOLATILE ORGANIC COMPOUNDS

Compound	CAS Number	Density of liquids (mg/μL)
acetone	67641	0.791
benzene	71432	0.874
bromobenzene	108861	1.491
bromochloromethane	74975	1.991
bromodichloromethane	75274	1.980
bromoform	75252	2.894
bromomethane	74839	0.838
2-butanone (MEK)	78933	0.805
n-butylbenzene	104518	0.860
sec-butylbenzene	135988	0.863
tert-butylbenzene	98066	0.867
carbon disulfide	75150	1.266
carbon tetrachloride	56235	1.594
chlorobenzene	108907	1.107
chlorodibromomethane	124481	2.451
chloroethane	75003	0.891
chloroform	67663	1.492
2-chlorotoluene	95498	1.083
4-chlorotoluene	106434	1.070
1,2-dibromo-3-chloropropane	96128	2.093
1,2-dibromoethane	106934	2.180
dibromomethane	74953	2.477
1,2-dichlorobenzene	95501	1.306
1,3-dichlorobenzene	541731	1.288
1,4-dichlorobenzene	106467	1.241
1,1-dichloroethane	75343	1.176
1,2-dichloroethane	107062	1.256
1,1-dichloroethene	75354	1.213
cis-1,2-dichloroethene	156592	1.284
trans-1,2-dichloroethene	156605	1.257
1,2-dichloropropane	78875	1.156
1,3-dichloropropane	142289	1.190
2,2-dichloropropane	594207	1.082
1,1-dichloropropene	563586	1.169
cis-1,3-dichloropropene	10061015	1.224
trans-1,3-dichloropropene	10061026	1.224
ethylbenzene	100414	0.867
2-hexanone	591786	0.812

TABLE I. VOLATILE ORGANIC COMPOUNDS (cont)

Compound	CAS Number	Density of liquids (mg/μL)
isopropylbenzene	98828	0.864
4-isopropyltoluene	99876	0.860
methylene chloride	75092	1.325
4-methyl-2-pentanone (MIK)	108101	0.800
n-propylbenzene	103651	0.862
styrene	100425	0.909
1,1,1,2-tetrachloroethane	630206	1.598
1,1,2,2,-tetrachloroethane	79345	1.586
tetrachloroethene	127184	1.623
toluene	108883	0.867
1,1,1-trichloroethane	71556	1.338
1,1,2-trichloroethane	79005	1.435
trichloroethene	79016	1.464
trichlorofluoromethane	75694	1.494
1,2,3-trichloropropane	96184	1.387
1,2,4-trimethylbenzene	95636	0.889
1,3,5-trimethylbenzene	108678	0.864
vinyl acetate	108054	0.934
mixed xylenes (total)	1330207	0.860

AMERICIUM-241 IN URINE — QC SAMPLE PREPARATION

Analyte: Americium-241	**Method No.:** QCR100
Matrix: Urine	**Spike Range:** 0.0 to 1.0 pCi/sample
Procedure: Radiochemistry and alpha spectrometry	**Accuracy and Precision:** 100% ± 4% RSD
Effective Date: 01/01/75	**Authors:** Margaret A. Gautier William D. Moss Nancy L. Koski

SAFETY NOTE: Before beginning this procedure, read all of the Material Safety Data Sheets for the chemicals listed in Sec. 5. Read Sec. 4.3 of the EM-9 Safety Manual for information on personal protective clothing and equipment. Read Sec. 9 of this procedure and Source Materials 10.11 to 10.13 for proper waste disposal practices.

1. Principle of Method

1.1. A pool of blank urine is prepared.

1.2. The blank urine is aliquoted and spiked with a known standard.

1.3. QC samples are submitted for analysis with each analytical batch and are analyzed along with the unknown samples using the same analytical procedure.

2. Accuracy and Precision

2.1. The propagated error on QC preparation is based on the calibration error from six sample plate preparations of the standard and on the error associated with use of the graduated cylinder and the pipette. A relative standard deviation (RSD) of 4.0% at the 1σ level has been calculated for the calibration, spiking, and aliquoting process based on the following:

$$D = \frac{M1 \times M2}{M3 + M2} ,$$

where D = calculated result,
M1 = calibration error,
M2 = spiking error, and
M3 = aliquoting error.

2.1.1. Calculate relative variance using the following equation.

$$R_M^2 = \frac{\sigma^2}{\overline{X}^2} ,$$

where R^2_M = relative variance,
M = $M_1 \ldots M_n$ (variable),
σ^2 = variance (std dev^2), and
$\overline{X}$ = mean value of each variable (M).

2.1.2. Calculate percent relative standard deviation using the following equation.

$$SD_T = \sqrt{\frac{\left[R^2_{M1}\,(M_3 + M_2)^2 + M_3^2\,(R^2_{M2} + R^2_{M3})\right]}{(M_3 + M_2)^2}} \times 100 ,$$

where SD_T = relative standard deviation (% error),
R^2_{M1} = relative variance of standard,
M_3 = volume of cylinder,
M_2 = volume of pipette,
R^2_{M2} = relative variance of pipette,
R^2_{M3} = relative variance of cylinder, and
100 = factor to convert to percentage.

2.2. Analysis by radiochemistry and alpha spectrometry of QC samples prepared between 1986 and 1989 using this procedure gave a mean recovery of 102% ± 3% RSD. The data are published in Source Materials 10.1 through 10.6 and are summarized below.

AMERICIUM-241 SPIKE RECOVERY AS A FUNCTION OF CONCENTRATION AFTER CORRECTION FOR AMERICIUM-243 RECOVERY

Year	Spike level pCi/sample	Mean ± RSD (%)	Number of samples
1986	0.23	114 ± 3	3
	0.46	100 -	1
	0.55	100 -	1

AMERICIUM-241 SPIKE RECOVERY AS A FUNCTION OF CONCENTRATION AFTER CORRECTION FOR AMERICIUM-243 RECOVERY (cont)

Year	Spike level pCi/sample	Mean ± RSD (%)	Number of samples
1987	0.23	104 - 1	
1987	0.54	112 ± 3	2
	0.90	109 ± 3	2
1988	0.24	104 -	1
	0.48	88 -	1
	0.58	97 -	1
	0.96	104 -	1
1989	0.24	92 ± -	1
	0.48	96 ± -	1
	0.96	102 ± -	2

3. Collection and Storage of Samples

3.1. Urine is collected as needed from group personnel who have no known contact with radiation work and is used to form a pool of blank urine.

3.2. Spiked QC samples are refrigerated at a nominal temperature of 4°C pending analysis.

4. Apparatus

4.1. Beakers: 4- or 5-L, polyethylene.

4.2. Graduated cylinders: 500-mL.

4.3. Auto-pipette: 100- and 1000-μL, Rainin or equivalent.

4.4. Pipette tips: disposable.

4.5. Specimen containers: 16-oz jars with screw caps. VWR Scientific Catalog No. 16193-810 or equivalent.

4.6. Labels printed with QC sample numbers.

4.7. Heat lamp.

4.8. Filter paper: 2.9-cm, Whatman No. 41 or equivalent.

4.9. Discs: stainless steel, 2.22-cm-diam.

4.10. Alpha phosphor on Mylar: The phosphor is the standard silver-activated zinc sulfide. William B. Johnson & Associates, Inc., Research Park, Montville, NJ 07045.

4.11. Rings and discs: plastic rings and discs, nominal 1-in.-diam, molded of nylon. Control Molding Corp., 84 Granite Ave., Staten Island, NY 10303.

4.12. Mylar film: 1.5-in.-wide rolls, 0.0005 in. thick. Manufactured by E. I. duPont de Nemours, retailed by Brownell, Inc., 85 Tenth Ave., New York, NY 10001.

5. Reagents

5.1. None required.

6. Calibration and Standards

6.1. QC samples are spiked with an ^{241}Am standard prepared in 4 N HNO_3. The solution is counted on a zinc sulfide scintillation system calibrated with National Institute of Standards and Technology (NIST) Standard Reference Material (SRM) 4904L-F, an ^{241}Am alpha-particle standard, using count room procedure CR340.

6.2. The ^{241}Am standard should be at a concentration of approximately 1.0 pCi/mL.

6.3. The ^{241}Am standard was calibrated against a NIST-certified ^{241}Am alpha-particle solution standard, such as NIST SRM 4322. Recalibrate the standard solution yearly by direct plating and alpha scintillation counting. Record all data in the QC laboratory notebook.

6.4. Direct plating procedure.

6.4.1. Pipette a 200- to 300-μL aliquot of the standard to be calibrated on each of six 2.22-cm stainless-steel discs and evaporate to dryness under a heat lamp.

6.4.2. Place a 2.9-cm filter paper on a molded nylon disc. The filter paper assures a tightly sealed package when assembled.

6.4.3. Place the stainless-steel disc containing the sample on the filter paper. Be sure they are centered.

6.4.4. Place a 0.875-in. phosphor paper over the stainless-steel disc (dull side against the disc).

6.4.5. Place a piece of Mylar film over all the layers.

6.4.6. Press a nylon ring down over the layers and around the nylon disc to form a tightly sealed package. Cut off the excess Mylar with scissors. Label the back of the assembly with an identification number.

6.4.7. Submit the samples to the count room for alpha scintillation counting and request a 60,000-s (overnight) per sample count.

6.4.8. The count room data are corrected for background and reported in disintegrations per minute (dis/min). Divide the dis/min results by 2.22 to convert to pCi. Calculate the mean and standard deviation of the six plates, and assign the value to the standard.

7. Procedure

7.1. Working with bodily fluids is discussed in detail in SOP-4, "Handling Human Biological Fluids," found in Appendix III of the EM-9 Safety Manual.

NOTE: Wear safety glasses, gloves, and a lab coat. Each day prepare a 1:100 dilution of household bleach in water in a spray bottle. Use this solution to thoroughly clean the work area after sample preparation is completed. Remove gloves, discard in the biohazard waste container, and wash hands with soap and water.

7.2. Prepare a pool from blank urine sufficient in volume to allow 400 mL for each QC sample to be prepared.

7.3. Prepare QC samples to equal at least 10% of the total number of samples to be analyzed. Include blank QCs prepared from the same urine pool as the spiked samples.

7.4. Record QC standard information, sample spike amount, concentration, and uncertainty in the QC Laboratory notebook.

7.5. Label bottles with QC sample numbers.

7.6. Aliquot 400 mL of blank urine into each sample bottle.

7.7. Spike the blank urine with aliquots of standard as determined in Step 7.3.

7.8. Screw caps on bottles and refrigerate at a nominal temperature of 4°C pending analysis.

7.9. Enter the spike concentrations of each QC into the CVS and CVD data bases on the VAX. This procedure is done annually because the same concentration levels are used throughout the year.

8. Calculations

8.1. Record spike concentrations as pCi/sample of urine.

8.2. Calculate the spike concentration for a 500-μL aliquot of ^{241}Am standard using the following equation:

$$\text{pCi/sample per spike amount} = (1.0\ \text{pCi/mL}) \times 0.500\ \text{mL} = 0.50\ \text{pCi/sample}$$

8.3. Spike concentrations calculated in Step 8.2 are tabulated below.

Spike amount (μL)	Concentration (pCi/sample)	Uncertainty (±4.0%)
250	0.25	0.01
500	0.50	0.02
600	0.60	0.02
900	0.90	0.04

9. Proper Waste Disposal Practices

9.1. Solid waste.

9.1.1. Radiochemically contaminated waste.

9.1.1.1. Radiochemically contaminated solid waste, such as paper wipes, glass or plastic pipettes, plastic cups, and incorrectly spiked QC samples, is accumulated in a covered metal can lined with a plastic bag and is kept segregated from nonradioactive solid waste.

9.1.1.2. The can is labeled with a hazardous waste label and a label indicating its use for radiochemical-contaminated waste.

9.1.1.3. The can is opened only for the time necessary to add waste.

9.1.1.4. When the plastic bag is full, it is sealed with tape, removed from the can, identified as radiochemically contaminated waste, and placed in a functioning chemical exhaust hood pending pickup by the Waste Management group.

9.1.1.5. A new plastic bag is put into the waste can for continued use.

9.1.2. Biohazardous waste.

9.1.2.1. Bottles used to collect blank urine for a quality control sample matrix are disposed of as uncontaminated laboratory trash after they have been rinsed with water in a laboratory sink.

9.1.2.2. Solid waste, such as paper wipes, plastic pipettes, and rubber gloves, contaminated with biohazardous material (primarily urine) is accumulated in a plastic bag labeled for the collection of biohazardous waste and is kept segregated from waste with no biohazard contamination.

9.1.2.3. Full bags of biohazardous waste are transferred to a cardboard box labeled with a biohazard label. The cardboard box is lined with a plastic bag bearing a biohazard label.

9.1.2.4. When the cardboard box if full, the liner bag and the box are sealed.

9.1.2.5. A new biohazard waste box lined with a plastic bag is prepared for further use.

9.2. Liquid waste.

9.2.1. Liquid waste contaminated with radionuclides is disposed of in a sink specifically approved for the disposal of aqueous radioactive waste and inorganic acids and bases.

9.3. Waste pickup.

9.3.1. Radioactively contaminated waste.

9.3.1.1. The surface exposure rate of the sealed bag of radiochemically contaminated solid waste is determined by a radiation protection technician and is recorded on the Radioactive Solid Waste Disposal (RSWD) record form.

9.3.1.2. Pickup by the Waste Management group of a full bag of radiochemically contaminated solid waste is requested using the current Chemical Waste Disposal Request (CWDR) form. The

current Waste Profile Request form (WPRF) that describes the waste is referenced on both disposal request forms.

9.3.1.3. The Waste Management group picks up the waste for disposal according to Laboratory policy.

9.3.2. Biohazardous waste.

9.3.2.1. Pickup of a full box of biohazardous waste is requested through the Waste Management group using the current Chemical Waste Disposal Request (CWDR) form. The current Waste Profile Request form (WPRF) that describes the waste is referenced on the CWDR.

9.3.2.2. The Waste Management group arranges for pickup and disposal of the waste by the company currently under contract with the Laboratory for that purpose.

10. Source Materials

10.1. M. A. Gautier, E. S. Gladney, and D. R. Perrin, "Quality Assurance for Health and Environmental Chemistry: 1984," Los Alamos National Laboratory report LA-10508-MS (1985).

10.2. M. A. Gautier, E. S. Gladney, and B. T. O'Malley, "Quality Assurance for Health and Environmental Chemistry: 1985," Los Alamos National Laboratory report LA-10813-MS (1986).

10.3. M. A. Gautier, E. S. Gladney, W. D. Moss, M. B. Phillips, and B. T. O'Malley, "Quality Assurance for Health and Environmental Chemistry: 1986," Los Alamos National Laboratory report LA-11114-MS (1987).

10.4. M. A. Gautier, E. S. Gladney, M. B. Phillips, and B. T. O'Malley, "Quality Assurance for Health and Environmental Chemistry: 1987," Los Alamos National Laboratory report LA-11454-MS (1988).

10.5. M. A. Gautier, E. S. Gladney, M. B. Phillips, and B. T. O'Malley, "Quality Assurance for Health and Environmental Chemistry: 1988," Los Alamos National Laboratory report LA-11637-MS (1989).

10.6. M. A. Gautier, E. S. Gladney, N. L. Koski, M. B. Phillips, E. A. Jones, and B. T. O'Malley, "Quality Assurance for Health and Environmental Chemistry: 1989," Los Alamos National Laboratory report LA-11995-MS (1990).

10.7. *EML Procedures Manual*, 25th ed., H. L. Volchok and G. de Planque, Eds. (Environmental Measurements Laboratory, New York, August 1982).

10.8. National Institute of Standards and Technology, "Certificate of Analysis for Standard Reference Material 4322, Americium-241 Alpha-Particle Solution Standard" (National Institute of Standards and Technology, Washington, DC, November 1986).

10.9. National Institute of Standards and Technology, "Certificate of Analysis for Standard Reference Material 4904L-F, Alpha-Particle Standard," (National Institute of Standards and Technology, Washington, DC, April 1982).

10.10. M. Phillips, "Handling Human Biological Fluids," Health and Environmental Chemistry SOP-4, September 1988, Los Alamos National Laboratory document.

10.11. "Low-Level Radioactive Solid Waste," Administrative Requirement 10-2, in *Environment, Safety, and Health Manual*, Los Alamos National Laboratory Manual, Chapter 1 (most recent edition).

10.12. "Hazardous and Mixed Waste," Administrative Requirement 10-3, in *Environment, Safety, and Health Manual*, Los Alamos National Laboratory Manual, Chapter 1 (most recent edition).

10.13. "Managing Infectious Waste," Administrative Requirement 10-7, in *Environment, Safety, and Health Manual*, Los Alamos National Laboratory Manual, Chapter 1 (most recent edition).

Revisions or additions to the procedure are marked (▒▒▒▒). Where a section heading is marked, the entire section has been revised.

CESIUM-137 ON SOIL — QC SAMPLE PREPARATION

Analyte: Cesium-137	**Method No.:** QCR110
Matrix: Sea sand	**Spike Range:** 5 to 60 pCi/g
Procedure: Gamma-ray spectrometry	**Accuracy and Precision:** 100% ± 5.4% RSD
Effective Date: 04/12/89	**Authors:** Nancy L. Koski Margaret A. Gautier

SAFETY NOTE: Before beginning this procedure, read all of the Material Safety Data Sheets for the chemicals listed in Sec. 5. Read Sec. 4.3 of the EM-9 Safety Manual for information on personal protective clothing and equipment. Read Sec. 9 of this procedure and Source Materials 10.4 and 10.5 for proper waste disposal practices.

1. Principle of Method

1.1. Sea sand is spiked with a ^{137}Cs standard. The sand is used in place of soil as the QC matrix for ^{137}Cs analysis by gamma-ray spectrometry.

1.2. QC samples are submitted for analysis with each analytical batch and are analyzed along with the unknown samples using the same analytical procedure.

1.3. Because the method of analysis is nondestructive, the QC samples can be reused provided the ^{137}Cs concentration is decayed periodically.

2. Accuracy and Precision

2.1. The propagated error on QC preparation is based on the calibration error of the standard and on the error associated with use of the pipette and of the balance. A relative standard deviation (RSD) of 5.4% at the 1σ level has been calculated for the calibration, spiking, and weighing process based on the following function:

$$D = \frac{M1 \times M2}{M3} ,$$

where D = calculated result,
M1 = calibration error,
M2 = spiking error, and
M3 = weighing error.

2.1.1. Calculate relative variance using the following equation.

$$R_M^2 = \frac{\sigma^2}{\overline{X}^2} ,$$

where R^2_M = relative variance,
M = $M_1 \ldots M_n$ (variable),
σ^2 = variance (std dev^2), and
$\overline{X}$ = mean value of each variable (M).

2.1.2. Calculate percent relative standard deviation using the following equation.

$$SD_T = \sqrt{R_{M1}^2 + R_{M2}^2 + R_{M3}^2} \times 100 ,$$

where SD_T = relative standard deviation (% error),
R^2_{M1} = relative variance of standard,
R^2_{M2} = relative variance of pipette,
R^2_{M3} = relative variance of balance, and
100 = factor to convert to percentage.

2.2. Analysis by gamma-ray spectrometry of QC samples prepared during 1989 and 1990 using this procedure gave a mean recovery of 99% ± 26% at the 1σ level. The data are published in Source Material 9.1 and are summarized below.

CESIUM-137 SPIKE RECOVERY AS A FUNCTION OF CONCENTRATION

	Spike range pCi/g	Mean ± RSD (%)	Number of samples
1989	0 to 15	83 ± 42	5
	15 to 30	106 ± 21	7
	30 to 45	87 ± 8	3
	45 to 70	114 ± 5	5
1990	0 to 15	91 ± 14	3
	15 to 30	114 ± 48	2

3. Collection and Storage of Samples

3.1. Spiked QC samples are stored at room temperature pending analysis.

4. Apparatus

4.1. Bottles: 500-mL, high-density polyethylene.

4.2. Balance: 200-g minimum capacity, 0.1-g accuracy.

4.3. Vortex mixer.

4.4. Auto-pipette: 1000-μL, Rainin or equivalent.

4.5. Pipette tips: disposable.

4.6. Pipettes: 2- to 15-mL, class A volumetric.

4.7. Heat lamp.

4.8. Labels printed with QC sample numbers.

5. Reagents

5.1. Sand. A clean and dry 100-g aliquot is required for each sample.

5.2. A suitable sand does not contain the analyte of interest and presents few interferences to the analytical method.

NOTE: Surface soils have been contaminated with radionuclides as a result of the use and testing of nuclear weapons. A suitable blank soil for this procedure would have been collected before World War II or would be collected from a deep well or other excavation where radioactive contamination is not likely to have occurred. Before use, a representative aliquot of soil is analyzed to determine if it will provide a suitably blank matrix.

6. Calibration and Standards

6.1. QC samples are spiked with a ^{137}Cs standard prepared in 1 M HCl at a concentration of approximately 350 pCi/mL.

6.2. The ^{137}Cs standard was obtained from Amersham International, White Lion Road, Amersham, Buckinghamshire, England HP7 9LL.

6.3. The ^{137}Cs standard was calibrated against a National Institute Standards and Technology (NIST)-certified ^{137}Cs Standard Reference Material (SRM) solution, such as NIST SRM 4233-B, containing 19 μg of high-purity cesium chloride per

gram in 1 M HCl. Recalibrate the standards yearly using gamma spectrometry. Record all data in the QC Laboratory notebook.

6.4. Decay the ^{137}Cs standards each year.

6.4.1. The half-life of ^{137}Cs is 30 years.

6.4.2. The following equation describes the rate of physical decay of radionuclides:

$$A_t = A_o e^{-\lambda t} ,$$

where A_t = the activity at desired time t,
A_o = the activity at t = 0,
e = the base of natural logarithms, and
λ = (ln 2)/$T_{1/2}$ or the decay constant, where $T_{1/2}$ is the half-life.

7. Procedure

7.1. Prepare QC samples to equal at least 10% of the total number of samples to be analyzed. Periodically include a 100-g aliquot of the unspiked sand as a blank.

7.2. Accurately weigh 100 g of sand into a 500-mL high-density polyethylene bottle. Record the weight of the sand on the bottle for reference by the analyst.

7.3. Spike an aliquot of ^{137}Cs standard onto the sand to reach a ^{137}Cs concentration in the desired spike range. Be careful to wet only the sand and not the container walls.

7.4. Dry the spiked sand under a heat lamp. Periodically mix the sand with a vortex mixer until all large clumps are broken up and the sand is dry.

7.5. Cap the bottle and label it with a QC sample number.

7.6. Record QC standard information, sample number, sample description, spike amount, concentration, uncertainty, and all calculations in the QC Laboratory notebook and in the CVS and CVD data bases on the VAX.

8. Calculations

8.1. Record the concentration of ^{137}Cs on the sand as pCi/g.

8.2. Calculate spike concentrations as in the following example.

8.2.1. If 12 mL of a 350-pCi/mL ^{137}Cs standard is used to spike 100.0 g of sand, the ^{137}Cs concentration in the sand will be 42 pCi/g. Multiply the result by the RSD calculated in Step 2.1 to obtain the uncertainty.

$$\frac{(350\ \text{pCi/mL})\ (12\ \text{mL})}{100.0\ \text{g}} = 42\ \text{pCi/g}$$

9. Proper Waste Disposal Practices

9.1. Solid waste.

9.1.1. Accumulate radioactively contaminated solid waste, such as paper wipes, glass or plastic pipettes, plastic cups, and incorrectly spiked QC samples, in a covered metal can lined with a plastic bag and keep it segregated from nonradioactive solid waste.

9.1.2. Label the can to indicate its use for radioactively contaminated waste.

9.1.3. Open the can only for the period of time necessary to add waste.

9.1.4. When the plastic bag is full, seal it with tape, remove it from the can, and identify it as radioactively contaminated waste.

9.1.5. Put a new plastic bag into the waste can for continued use.

9.1.6. Place the sealed bag into a cardboard box lined with a plastic bag and keep the box inside a metal compactable waste container. Reference to the current Waste Profile Request form (WPRF) describing the waste accompanies the sealed bag.

9.1.7. Label the metal container to indicate its use for radioactively contaminated waste.

9.1.8. When the cardboard box is full, seal the plastic bag liner and the box. Check the outside of the box for radioactive contamination and record the information in the Radioactive Waste Disposal logbook.

9.1.9. The radioactive solid waste coordinator marks the cardboard box as radioactively contaminated compactable waste and references the current WPRF numbers describing the waste in the box on the outside of the box and in the Radioactive Waste Disposal logbook.

9.1.10. Place a new lined cardboard box into the metal container for continued use.

9.1.11. Place the sealed box in a dumpster for compactable mixed waste.

9.2. Liquid waste.

9.2.1. Dispose of radioactively contaminated liquid waste in a sink specifically approved for the disposal of aqueous radioactive waste and inorganic acids and bases.

9.3. Waste pickup.

9.3.1. When the dumpster containing solid waste is full, the surface exposure rate of the dumpster is determined by a radiation protection technician and is recorded on the Radioactive Solid Waste Disposal (RSWD) Record form.

9.3.2. Reference all the WPRF numbers associated with the waste in the dumpster on the RSWD.

9.3.3. Request pickup by the Waste Management group of a full dumpster. The RSWD and all the associated WPRFs accompany the dumpster.

9.3.4. The Waste Management group disposes of the waste according to Laboratory policy.

10. Source Materials

10.1. M. A. Gautier, E. S. Gladney, N. L. Koski, M. B. Phillips, E. A. Jones, and B. T. O'Malley, "Quality Assurance for Health and Environmental Chemistry: 1989," Los Alamos National Laboratory report LA-11995-MS (1990).

10.2. Amersham Corporation, "Certificate of Measurement of Caesium-137 Radioactive Reference Solution" (Amersham Corporation, Arlington Heights, Illinois, October 1973).

10.3. National Institute of Standards and Technology, "Certificate of Analysis for Standard Reference Material 4233-B, Cesium-137 Burn-Up Standard" (National Institute of Standards and Technology, Washington, DC, November 1979).

10.4. "Low-Level Radioactive Solid Waste," Administrative Requirement 10-2, in *Environment, Safety, and Health Manual*, Los Alamos National Laboratory Manual, Chapter 1 (most recent edition).

10.5. "Chemical, Hazardous, and Mixed Waste," Administrative Requirement 10-3, in *Environment, Safety, and Health Manual*, Los Alamos National Laboratory Manual, Chapter 1 (most recent edition).

Revisions or additions to the procedure are marked (▒▒▒). Where a section heading is marked, the entire section has been revised.

CESIUM-137 ON SOIL — QC SAMPLE PREPARATION

Analyte: Cesium-137	**Method No.:** QCR110
Matrix: Sea sand	**Spike Range:** 5 to 60 pCi/g
Procedure: Gamma-ray spectrometry	**Accuracy and Precision:** 100% ± 5.4% RSD
Effective Date: 04/12/89	**Authors:** Nancy L. Koski Margaret A. Gautier

SAFETY NOTE: Before beginning this procedure, read all of the Material Safety Data Sheets for the chemicals listed in Sec. 5. Read Sec. 4.3 of the EM-9 Safety Manual for information on personal protective clothing and equipment.

1. Principle of Method

1.1. Sea sand is spiked with a ^{137}Cs standard. The sand is used in place of soil as the QC matrix for ^{137}Cs analysis by gamma-ray spectrometry.

1.2. QC samples are submitted for analysis with each analytical batch and are analyzed along with the unknown samples using the same analytical procedure.

1.3. Because the method of analysis is nondestructive, the QC samples can be reused providing the ^{137}Cs concentration is decayed periodically.

2. Accuracy and Precision

2.1. The propagated error on QC preparation is based on the calibration error of the standard and on the error associated with use of the pipette and of the balance. A relative standard deviation (RSD) of 5.4% has been calculated for the calibration, spiking, and weighing process based on the following function:

$$U = \frac{M1 \times M2}{M3} ,$$

where U = uncertainty,
M1 = calibration error,
M2 = spiking error, and
M3 = weighing error.

2.1.1. Calculate relative variance using the following equation.

$$R_M^2 = \frac{\sigma^2}{\overline{X}^2} ,$$

where R^2_M = relative variance,
M = $M_1 \ldots M_n$ (variable),
σ^2 = variance (std dev^2), and
$\overline{X}$ = mean value of each variable (M).

2.1.2. Calculate percent relative standard deviation using the following equation.

$$SD_T = \sqrt{R_{M1}^2 + R_{M2}^2 + R_{M3}^2} \times 100 ,$$

where SD_T = relative standard deviation (% error),
R^2_{M1} = relative variance of standard,
R^2_{M2} = relative variance of pipette,
R^2_{M3} = relative variance of balance, and
100 = factor to convert to percentage.

2.2. Analysis by gamma-ray spectrometry of QC samples prepared during 1989 and 1990 using this procedure gave a mean recovery of 99% ± 26% at the 1σ level. The data are published in **Source Material** 9.1 and are summarized below.

CESIUM-137 SPIKE RECOVERY AS A FUNCTION OF CONCENTRATION

	Spike Range pCi/g	Mean ± RSD (%)	Number of Samples
1989	0 to 15	83 ± 42	5
	15 to 30	106 ± 21	7
	30 to 45	87 ± 8	3
	45 to 70	114 ± 5	5
1990	0 to 15	91 ± 14	3
	15 to 30	114 ± 48	2

3. Collection and Storage of Samples

3.1. Spiked QC samples are stored at room temperature pending analysis.

4. Apparatus

4.1. Bottles: 500-mL, high-density polyethylene.

4.2. Balance: 200-g minimum capacity, 0.1-g accuracy.

4.3. Vortex mixer.

4.4. Auto-pipette: 1000-μL, Rainin or equivalent.

4.5. Pipette tips: disposable.

4.6. Pipettes: 10- to 15-mL, class A volumetric.

4.7. Heat lamp.

4.8. Labels printed with QC sample numbers.

5. Reagents

5.1. Sand. A clean and dry 100-g aliquot is required for each sample.

5.2. A suitable sand does not contain the analyte of interest and presents few interferences to the analytical method.

NOTE: Surface soils have been contaminated with radionuclides as a result of the use and testing of nuclear weapons. A suitable blank soil for this procedure would have been collected before World War II or would be collected from a deep well or other excavation where radioactive contamination is not likely to have occurred. Before use, a representative aliquot of soil is analyzed to determine if it will provide a suitably blank matrix.

6. Calibration and Standards

6.1. QC samples are spiked with a ^{137}Cs standard prepared in 1 M HCl at a concentration of approximately 350 pCi/mL.

6.2. The ^{137}Cs standard was obtained from Amersham International, White Lion Road, Amersham, Buckinghamshire, England HP7 9LL.

6.3. The ^{137}Cs standard was calibrated against a National Institute Standards and Technology (NIST)-certified ^{137}Cs Standard Reference Material (SRM) solution, such as NIST SRM 4233-B, containing 19 μg of high-purity cesium chloride per

gram in 1M HCl. Recalibrate the standards yearly using gamma spectrometry. Record all data in the QC Laboratory notebook.

6.4. Decay the ^{137}Cs standards each year.

6.4.1. The half-life of ^{137}Cs is 30 years.

6.4.2. The following equation describes the rate of physical decay of radionuclides:

$$A_t = A_o e^{-\lambda t} ,$$

where A_t = the activity at desired time t,
A_o = the activity at t = 0,
e = the base of natural logarithms,
λ = $\ln 2/T_{1/2}$ or the decay constant, and
$T_{1/2}$ = the half-life.

7. Procedure

7.1. Prepare QC samples to equal at least 10% of the total number of samples to be analyzed. Periodically include a 100-g aliquot of the unspiked sand as a blank.

7.2. Accurately weigh 100 g of sand into a 500-mL, high-density polyethylene bottle. Record the weight of the sand on the bottle for reference by the analyst.

7.3. Spike an aliquot of ^{137}Cs standard onto the sand to reach a ^{137}Cs concentration in the desired spike range. Be careful to wet only the sand and not the container walls.

7.4. Dry the spiked sand under a heat lamp. Periodically mix the sand with a vortex mixer until all large clumps are broken up and the sand is dry.

7.5. Cap the bottle and label it with a QC sample number.

7.6. Record QC standard information, sample number, sample description, spike amount, concentration, uncertainty, and all calculations in the QC Laboratory notebook and in the CVS and CVD data bases on the VAX.

8. Calculations

8.1. Record the concentration of ^{137}Cs on the sand as pCi/g.

8.2. Calculate spike concentrations using the following example.

8.2.1. If 12 mL of a 350-pCi/mL ^{137}Cs standard is used to spike 100.0 g of sand, the ^{137}Cs concentration in the sand will be 42 pCi/g. Multiply the result by the RSD calculated in Step 2.1 to obtain the uncertainty.

$$\frac{(350\ \text{pCi/mL})\ (12\ \text{mL})}{100.0\ \text{g}} = 42\ \text{pCi/g} \quad .$$

9. Source Materials

9.1. M. A. Gautier, E. S. Gladney, N. L. Koski, M. B. Phillips, E. A. Jones, and B. T. O'Malley, "Quality Assurance for Health and Environmental Chemistry: 1989," Los Alamos National Laboratory report LA-11995-MS (1990).

9.2. Amersham Corporation, "Certificate of Measurement of Caesium-137 Radioactive Reference Solution" (Amersham Corporation, Arlington Heights, Illinois, October 1973).

9.3. National Institute of Standards and Technology, "Certificate of Analysis for Standard Reference Material 4233-B, Cesium-137 Burn-Up Standard" (National Institute of Standards and Technology, Washington, DC, November 1979).

CESIUM-137 ON VEGETATION ASH — QC SAMPLE PREPARATION

Analyte: Cesium-137	**Method No.:** QCR120
Matrix: Vegetation ash	**Spike Range:** 5 to 60 pCi/g
Procedure: Gamma-ray spectrometry	**Accuracy and Precision:** 100% ± 5.4% RSD
Effective Date: 04/19/89	**Authors:** Nancy L. Koski Margaret A. Gautier

SAFETY NOTE: Before beginning this procedure, read all of the Material Safety Data Sheets for the chemicals listed in Sec. 5. Read Sec. 4.3 of the EM-9 Safety Manual for information on personal protective clothing and equipment. Read Sec. 9 of this procedure and Source Materials 10.4 and 10.5 for proper waste disposal practices.

1. Principle of Method

1.1. Blank vegetation ash is spiked with a ^{137}Cs standard.

1.2. QC samples are submitted for analysis with each analytical batch and are analyzed along with the unknown samples using the same analytical procedure.

1.3. Because the method of analysis is nondestructive, the QC sample can be reused provided the ^{137}Cs concentration is decayed periodically.

2. Accuracy and Precision

2.1. The propagated error on QC preparation is based on the calibration error of the standard and on the error associated with use of the pipette and of the balance. A relative standard deviation (RSD) of 5.4% at the 1σ level has been calculated for the calibration, spiking, and weighing process based on the following function:

$$D = \frac{M1 \times M2}{M3} ,$$

where D = calculated result,
M1 = calibration error,
M2 = spiking error, and
M3 = weighing error.

2.1.1. Calculate relative variance using the following equation.

$$R_M^2 = \frac{\sigma^2}{\overline{X}^2} ,$$

where R^2_M = relative variance,
M = $M_1 \ldots M_n$ (variable),
σ^2 = variance (std dev^2), and
$\overline{X}$ = mean value of each variable (M).

2.1.2. Calculate percent relative standard deviation using the following equation.

$$S_{D_T} = \sqrt{R^2_{M1} + R^2_{M2} + R^2_{M3}} \times 100 ,$$

where S_{D_T} = relative standard deviation (% error),
R^2_{M1} = relative variance of standard,
R^2_{M2} = relative variance of pipette,
R^2_{M3} = relative variance of balance, and
100 = factor to convert to percentage.

2.2. Analysis by gamma-ray spectrometry of QC samples prepared during 1989 and 1990 using this procedure gave a mean recovery of 102% ± 24% at the 1σ level (N = 7). The data are published in Source Material 9.1.

3. Collection and Storage of Samples

3.1. Spiked QC samples are stored at room temperature pending analysis.

4. Apparatus

4.1. Bottles: 500-mL, high-density polyethylene.

4.2. Balance: 200-g minimum capacity, 0.1-g accuracy.

4.3. Spatula.

4.4. Auto-pipette: 1000-μL, Rainin or equivalent.

4.5. Pipette tips: disposable.

4.6. Pipettes: 2- to 15-mL, class A volumetric.

4.7. Heat lamps.

4.8. Vortex mixer.

4.9. Labels printed with QC sample numbers.

5. Reagents

5.1. Blank vegetation ash is used as the sample matrix. A 100-g aliquot is required for each sample.

5.2. A suitable vegetation ash does not contain the analyte of interest and presents few interferences to the analytical method. Commercially available dry pet or farm stock foods may provide a suitable matrix.

6. Calibration and Standards

6.1. QC samples are spiked with a ^{137}Cs standard prepared in 1 M HCl at a concentration of approximately 350 pCi/mL.

6.2. The ^{137}Cs standard may be obtained from Amersham International, White Lion Road, Amersham, Buckinghamshire, England HP7 9LL.

6.3. The ^{137}Cs standard was calibrated against a National Institute Standards and Technology (NIST)-certified ^{137}Cs Standard Reference Material (SRM) solution, such as NIST SRM 4233-B, containing 19 μg of high-purity cesium chloride per gram in 1 M HCl. Recalibrate the standards yearly using gamma spectrometry. Record all data in the QC Laboratory notebook.

6.3.1. The half-life of ^{137}Cs is 30 years.

6.3.2. The following equation describes the rate of physical decay of radionuclides:

$$A_t = A_o e^{-\lambda t} \quad ,$$

where A_t = the activity at desired time t,
A_o = the activity at t = 0,
e = the base of natural logarithms, and
λ = (ln 2)/$T_{1/2}$ or the decay constant, where $T_{1/2}$ is the half-life.

7. Procedure

7.1. Prepare QC samples to equal at least 10% of the total number of samples to be analyzed. Periodically include a 100-g aliquot of the unspiked vegetation ash as a blank.

7.2. Accurately weigh 100 g of blank vegetation ash into a 500-mL high-density polyethylene bottle. Record the weight of ash on the bottle for reference by the analyst.

7.3. Pipette an aliquot of ^{137}Cs standard onto the ash to reach a ^{137}Cs concentration in the desired spike range. Be careful to wet only the ash and not the container walls.

7.4. Dry the spiked sample under a heat lamp, periodically mixing it with a vortex mixer, until completely dry and homogeneous.

7.5. Cap the bottle and label it with a QC sample number.

7.6. Record QC standard information, sample number, sample description, spike amount, concentration, uncertainty, and all calculations in the QC Laboratory notebook and in the CVS and CVD data bases on the VAX.

8. Calculations

8.1. Record the concentration of ^{137}Cs in the vegetation ash sample as pCi/g.

8.2. Calculate spike concentrations as in the following example.

8.2.1. If 2.0 mL of a 350-pCi/mL ^{137}Cs standard is spiked on 100.0 g of blank vegetation ash, the concentration of ^{137}Cs in the ash will be 7 pCi/g. Multiply the result by the RSD calculated in Step 2.1 to obtain the uncertainty.

$$\frac{(350\ \text{pCi/mL})\ (2.0\ \text{mL})}{100.0\ \text{g}} = 7\ \text{pCi/g}$$

9. Proper Waste Disposal Practices

9.1. Solid waste.

9.1.1. Accumulate radioactively contaminated solid waste, such as paper wipes, glass or plastic pipettes, plastic cups, and incorrectly spiked QC samples, in a covered metal can lined with a plastic bag and keep it segregated from nonradioactive solid waste.

9.1.2. Label the can to indicate its use for radioactively contaminated waste.

9.1.3. Open the can only for the period of time necessary to add waste.

9.1.4. When the plastic bag is full, seal it with tape, remove it from the can, and identify it as radioactively contaminated waste.

9.1.5. Put a new plastic bag into the waste can for continued use.

9.1.6. Place the sealed bag into a cardboard box lined with a plastic bag and keep the box inside a metal compactable waste container. Reference to the current Waste Profile Request form (WPRF) describing the waste accompanies the sealed bag.

9.1.7. Label the metal container to indicate its use for radioactively contaminated waste.

9.1.8. When the cardboard box is full, seal the plastic bag liner and the box. Check the outside of the box for radioactive contamination and record the information in the Radioactive Waste Disposal logbook.

9.1.9. The radioactive solid waste coordinator marks the cardboard box as radioactively contaminated compactable waste and references the current WPRF numbers describing the waste in the box on the outside of the box and in the Radioactive Waste Disposal logbook.

9.1.10. Place a new lined cardboard box into the metal container for continued use.

9.1.11. Place the sealed box in a dumpster for compactable mixed waste.

9.2. Liquid waste.

9.2.1. Dispose of radioactively contaminated liquid waste in a sink specifically approved for the disposal of aqueous radioactive waste and inorganic acids and bases.

9.3. Waste pickup.

9.3.1. When the dumpster containing solid waste is full, the surface exposure rate of the dumpster is determined by a radiation protection technician and is recorded on the Radioactive Solid Waste Disposal (RSWD) Record form.

9.3.2. Reference all the WPRF numbers associated with the waste in the dumpster on the RSWD.

9.3.3. Request pickup by the Waste Management group of a full dumpster. The RSWD and all the associated WPRFs accompany the dumpster.

9.3.4. The Waste Management group disposes of the waste according to Laboratory policy.

10. Source Materials

10.1. M. A. Gautier, E. S. Gladney, N. L. Koski, M. B. Phillips, E. A. Jones, and B. T. O'Malley, "Quality Assurance for Health and Environmental Chemistry: 1989," Los Alamos National Laboratory report LA-11995-MS (1990).

10.2. Amersham Corporation, "Certificate of Measurement of Caesium-137 Radioactive Reference Solution" (Amersham Corporation, Arlington Heights, Illinois, October 1973).

10.3. National Institute of Standards and Technology, "Certificate of Analysis for Standard Reference Material 4233-B, Cesium-137 Burn-Up Standard" (National Institute of Standards and Technology, Washington, DC, November 1979).

10.4. "Low-Level Radioactive Solid Waste," Administrative Requirement 10-2, in *Environment, Safety, and Health Manual*, Los Alamos National Laboratory Manual, Chapter 1 (most recent edition).

10.5. "Chemical, Hazardous, and Mixed Waste," Administrative Requirement 10-3, in *Environment, Safety, and Health Manual*, Los Alamos National Laboratory Manual, Chapter 1 (most recent edition).

Revisions or additions to the procedure are marked (▒). Where a section heading is marked, the entire section has been revised.

CESIUM-137 IN WATER — QC SAMPLE PREPARATION

Analyte: Cesium-137	**Method No.:** QCR130
Matrix: Water	**Spike Range:** 500 to 2000 pCi/L
Procedure: Gamma-ray spectrometry	**Accuracy and Precision:** 100% ± 5.4% RSD
Effective Date: 04/17/90	**Author:** Nancy L. Koski Margaret A. Gautier

SAFETY NOTE: Before beginning this procedure, read all of the Material Safety Data Sheets for the chemicals listed in Sec. 5. Read Sec. 4.3 of the EM-9 Safety Manual for information on personal protective clothing and equipment. Read Sec. 9 of this procedure and Source Materials 10.4 and 10.5 for proper waste disposal practices.

1. Principle of Method

1.1. Water is spiked with a ^{137}Cs standard.

1.2. QC samples are submitted for analysis with each analytical batch and are analyzed along with the unknown samples using the same analytical procedure.

1.3. Because the method of analysis is nondestructive, the QC sample can be reused provided the ^{137}Cs concentration is decayed periodically.

2. Accuracy and Precision

2.1. The propagated error on QC preparation is based on the calibration error of the standard and on the error associated with use of the pipette and of the volumetric flask. A relative standard deviation (RSD) of 5.4% at the 1σ level has been calculated for the calibration, spiking, and dilution process based on the following function:

$$D = \frac{M1 \times M2}{M3} ,$$

where D = calculated result,
M1 = calibration error,
M2 = spiking error, and
M3 = dilution error.

2.1.1. Calculate relative variance using the following equation.

$$R_M^2 = \frac{\sigma^2}{\overline{X}^2} ,$$

where R^2_M = relative variance,
M = $M_1 \ldots M_n$ (variable),
σ^2 = variance (std dev^2), and
$\overline{X}$ = mean value of each variable (M).

2.1.2. Calculate percent relative standard deviation using the following equation.

$$SD_T = \sqrt{R_{M1}^2 + R_{M2}^2 + R_{M3}^2} \times 100 ,$$

where SD_T = relative standard deviation (% error),
R^2_{M1} = relative variance of standard,
R^2_{M2} = relative variance of pipette,
R^2_{M3} = relative variance of volumetric flask, and
100 = factor to convert to percentage.

2.2. Analysis by gamma-ray spectrometry of QC samples prepared during 1989 and 1990 using this procedure gave a mean recovery of 91% ± 14% at the 1σ level. The data are published in Source Material 10.1 and are summarized below.

CESIUM-137 SPIKE RECOVERY AS A FUNCTION OF CONCENTRATION

	Spike range pCi/L	Mean ± SD (%)	Number of samples
1989	100 to 400	91 ± 9	3
	500 to 900	75 ± 7	3
1990	100 to 500	88 ± 10	6
	500 to 1200	99 ± 16	8

3. Collection and Storage of Samples

3.1. Spiked QC samples are stored at room temperature pending analysis.

4. Apparatus

4.1. Volumetric flask: 500-mL, glass, class A.

4.2. Bottles: 500-mL, high-density polyethylene.

4.3. Auto-pipette: 1000-μL, Rainin or equivalent.

4.4. Pipette tips: disposable.

4.5. Pipettes: 1-, 2-, and 3-mL, class A volumetric.

4.6. Labels printed with QC sample numbers.

5. Reagents

5.1. Nitric acid (concentrated, reagent-grade).

6. Calibration and Standards

6.1. QC samples are spiked with a ^{137}Cs standard prepared in 1 M HCl at a concentration of approximately 350 pCi/mL.

6.2. The ^{137}Cs standard may be obtained from Amersham International, White Lion Road, Amersham, Buckinghamshire, England HP7 9LL.

6.3. The ^{137}Cs standard was calibrated against a National Institute of Standards and Technology (NIST)-certified ^{137}Cs Standard Reference Material (SRM) solution, such as NIST SRM 4233-B, containing 19 μg of high-purity cesium chloride per gram in 1 M HCl. Recalibrate the standards yearly using gamma spectrometry. Record all data in the QC Laboratory notebook.

6.4. Decay the ^{137}Cs standards each year.

6.4.1. The half-life of ^{137}Cs is 30 years.

6.4.2. The following equation describes the rate of physical decay of radionuclides:

$$A_t = A_o e^{-\lambda t} \quad ,$$

where A_t = the activity at desired time t,
A_o = the activity at t = 0,
e = the base of natural logarithms, and
λ = (ln 2)/$T_{1/2}$ or the decay constant where $T_{1/2}$ is the half-life.

7. Procedure

7.1. Prepare QC samples to equal at least 10% of the total number of samples to be analyzed. Periodically include a 500-mL aliquot of the unspiked acidified water as a blank.

7.2. Measure approximately 400 mL of distilled water into a 500-mL volumetric flask.

7.3. Add 1.25 mL of concentrated HNO_3 to the water in the flask to reach a pH of approximately 1.

7.4. Spike an aliquot of ^{137}Cs standard into the flask to reach a ^{137}Cs concentration in the desired spike range.

7.5. Fill the volumetric flask to volume with distilled water and mix by inverting.

7.6. Transfer the solution to a 500-mL high-density polyethylene bottle, and label it with a QC sample number.

7.7. Record QC standard information, sample number, sample description, spike amount, concentration, uncertainty, and all calculations in the QC Laboratory notebook and in the CVS and CVD data bases on the VAX.

8. Calculations

8.1. Record the concentration of ^{137}Cs in the solution as nCi/L or pCi/L.

8.2. Calculate spike concentrations as in the following example.

8.2.1. If 1 mL of a 350-pCi/mL ^{137}Cs standard is used to spike 500 mL of acidified water, the concentration of ^{137}Cs in the acidified water will be 700 pCi/L. Multiply the result by the RSD calculated in Step 2.1 to obtain the uncertainty.

$$\frac{(350\ \text{pCi/mL})\ (1\ \text{mL})}{(500\ \text{mL})\ (1\ \text{L}/1000\ \text{mL})} = 700\ \text{pCi/L} \quad .$$

9. Proper Waste Disposal Practices

9.1. Solid Waste

9.1.1. Accumulate radioactively contaminated solid waste, such as paper wipes, glass or plastic pipettes, plastic cups, and incorrectly spiked QC samples, in a covered metal can lined with a plastic bag and keep it segregated from nonradioactive solid waste.

9.1.2. Label the can to indicate its use for radioactively contaminated waste.

9.1.3. Open the can only for the period of time necessary to add waste.

9.1.4. When the plastic bag is full, seal it with tape, remove it from the can, and identify it as radioactively contaminated waste.

9.1.5. Put a new plastic bag into the waste can for continued use.

9.1.6. Place the sealed bag into a cardboard box lined with a plastic bag and keep the box inside a metal compactable waste container. Reference to the current Waste Profile Request form (WPRF) describing the waste accompanies the sealed bag.

9.1.7. Label the metal container to indicate its use for radioactively contaminated waste.

9.1.8. When the cardboard box is full, seal the plastic bag liner and the box. Check the outside of the box for radioactive contamination and record the information in the Radioactive Waste Disposal logbook.

9.1.9. The radioactive solid waste coordinator marks the cardboard box as radioactively contaminated compactable waste and references the current WPRF numbers describing the waste in the box on the outside of the box and in the Radioactive Waste Disposal logbook.

9.1.10. Place a new lined cardboard box into the metal container for continued use.

9.1.11. Place the sealed box in a dumpster for compactable mixed waste.

9.2. Liquid Waste

9.2.1. Dispose of radioactively contaminated liquid waste in a sink specifically approved for the disposal of aqueous radioactive waste and inorganic acids and bases.

9.3. Waste Pickup

9.3.1. When the dumpster containing solid waste is full, the surface exposure rate of the dumpster is determined by a radiation protection technician and is recorded on the Radioactive Solid Waste Disposal (RSWD) Record form.

9.3.2. Reference all the WPRF numbers associated with the waste in the dumpster on the RSWD.

9.3.3. Request pickup by the Waste Management group of a full dumpster. The RSWD and all the associated WPRFs accompany the dumpster.

9.3.4. The Waste Management group disposes of the waste according to Laboratory policy.

10. Source Materials

10.1. M. A. Gautier, E. S. Gladney, N. L. Koski, M. B. Phillips, E. A. Jones, and B. T. O'Malley, "Quality Assurance for Health and Environmental Chemistry: 1989," Los Alamos National Laboratory report LA-11995-MS (1990).

10.2. Amersham Corporation, "Certificate of Measurement of Caesium-137 Radioactive Reference Solution" (Amersham Corporation, Arlington Heights, Illinois, October 1973).

10.3. National Institute of Standards and Technology, "Certificate of Analysis for Standard Reference Material 4233-B, Cesium-137 Burn-Up Standard" (National Institute of Standards and Technology, Washington, DC, November 1979).

10.4. "Low-Level Radioactive Solid Waste," Administrative Requirement 10-2, in *Environment, Safety, and Health Manual*, Los Alamos National Laboratory Manual, Chapter 1 (most recent edition).

10.5. "Chemical, Hazardous, and Mixed Waste," Administrative Requirement 10-3, in *Environment, Safety, and Health Manual*, Los Alamos National Laboratory Manual, Chapter 1 (most recent edition).

Revisions or additions to the procedure are marked (▒▒▒). Where a section heading is marked, the entire section has been revised.

GROSS ALPHA AND GROSS BETA ON SOIL — QC SAMPLE PREPARATION

Analyte: Gross alpha and gross beta	**Method No.:** QCR140
Matrix: Sand	**Spike Range:** 2.5-10 pCi/g
Procedure: Proportional counting	**Accuracy and Precision:** Gross alpha 100% ± 4.5% RSD Gross beta 100% ± 3.2% RSD
Effective Date: 06/01/90	**Authors:** Nancy L. Koski Margaret A. Gautier

SAFETY NOTE: Before beginning this procedure, read all of the Material Safety Data Sheets for the chemicals listed in Sec. 5. Read Sec. 4.3 of the EM-9 Safety Manual for information on personal protective clothing and equipment. Read Sec. 9 of this procedure and Source Materials 10.2 and 10.3 for proper waste disposal practices.

1. Principle of Method

1.1. Blank sand spiked with ^{241}Am and ^{90}Sr standards is used in place of soil as the QC matrix for gross alpha and gross beta analysis by proportional counting.

1.2. Gross beta is contributed equally by ^{90}Sr and the ^{90}Y radioactive decay products that are in equilibrium in the ^{90}Sr standard solution.

1.3. QC samples are submitted for analysis with each analytical batch and are analyzed along with the unknown samples using the same analytical procedure.

2. Accuracy and Precision

2.1. The propagated error on QC preparation is based on the calibration error of the standard and on the error associated with use of the pipette and of the balance. A relative standard deviation (RSD) of 4.5% at the 1σ level for gross alpha and 3.2% at the 1σ level for gross beta has been calculated for the calibration, spiking, and weighing process based on the following function:

$$D = \frac{M1 \times M2}{M3} ,$$

where D = calculated result,
M1 = calibration error,
M2 = spiking error, and
M3 = weighing error.

2.1.1. Calculate relative variance using the following equation.

$$R_M^2 = \frac{\sigma^2}{\overline{X}^2} ,$$

R^2_M = relative variance,
M = $M_1 \ldots M_n$ (variable),
σ^2 = variance (std dev^2), and
$\overline{X}$ = mean value of each variable (M).

2.1.2. Calculate percent relative standard deviation using the following equation.

$$S_{D_T} = \sqrt{R_{M1}^2 + R_{M2}^2 + R_{M3}^2} \times 100 ,$$

where SD_T = relative standard deviation (% error),
R^2_{M1} = relative variance of standard,
R^2_{M2} = relative variance of pipette,
R^2_{M3} = relative variance of balance, and
100 = factor to convert to percentage.

2.2. Recovery data for proportional counting of QC samples prepared during 1990 using this procedure are published in Source Material 10.1.

3. Collection and Storage of Samples

3.1. Store QC samples in glass beakers covered with plastic wrap at room temperature pending analysis.

4. Apparatus

4.1. Beakers: 100-mL, glass.

4.2. Auto-pipette: 100- and 1000-μL, Rainin or equivalent.

4.3. Pipette tips: disposable.

4.4. Balance: 200-g minimum capacity, 0.1-mg accuracy.

4.5. Spatula.

4.6. Plastic wrap.

4.7. Heat lamp.

4.8. Labels printed with QC sample numbers.

4.9. Filter paper: 2.9-cm, Whatman No. 41 or equivalent.

4.10. Discs: stainless-steel, 2.22-cm-diam.

4.11. Alpha phosphor on Mylar: The phosphor is the standard silver-activated zinc sulfide. William B. Johnson & Associates, Inc., Research Park, Montville, NJ 07045.

4.12. Rings and discs: plastic rings and discs, nominal 1-in.-diam, molded of nylon. Control Molding Corp., 84 Granite Ave., Staten Island, NY 10303.

4.13. Mylar film: 1.5-in.-wide rolls, 0.0005 in. thick. Manufactured by E. I. duPont de Nemours, retailed by Brownell, Inc., 85 Tenth Ave., New York, NY 10001.

5. Reagents

5.1. Sand. A clean, dry 2-g aliquot is required for each sample.

5.2. A suitable sand does not contain the analyte of interest and presents few interferences to the analytical method.

NOTE: Surface soils have been contaminated with radionuclides as a result of the use and testing of nuclear weapons. A suitable blank soil for this procedure would have been collected before World War II or would be collected from a deep well or other excavation where radioactive contamination is not likely to have occurred. Before use, a representative aliquot of soil is analyzed to determine if it will provide a suitably blank matrix.

6. Calibration and Standards

6.1. When certified primary standards are available, dilute them to make standards at the desired concentration.

6.2. Calibrate standard solutions that are not made from certified primary standards against an appropriate certified standard.

6.3. Gross alpha.

6.3.1. Spike QC samples with an ^{241}Am standard prepared in 4 N HNO_3 at a concentration of approximately 180 pCi/mL. Count the solution on a zinc sulfide scintillation system calibrated with National Institute of Standards and Technology (NIST) Standard Reference Material (SRM)

4904L-F, an ^{241}Am alpha-particle standard, using count room procedure CR340.

6.3.2. Calibrate the ^{241}Am standard against an NIST-certified ^{241}Am alpha-particle solution standard, such as NIST SRM 4322. Calibrate the standard solution annually by direct plating and alpha scintillation counting. Record all data in the QC Laboratory notebook.

6.3.3. Direct plating procedure.

6.3.3.1. Pipette a 200- to 300-μL aliquot of the standard to be calibrated on each of six 2.22-cm stainless-steel discs, and evaporate to dryness under a heat lamp.

6.3.3.2. Place a 2.9-cm filter paper on a molded nylon disc. The filter paper assures the package is tightly sealed when assembled.

6.3.3.3. Place the stainless-steel disc containing the sample on the filter paper, making sure to center it.

6.3.3.4. Place a 0.875-in. phosphor paper over the stainless-steel disc (dull side against the disc).

6.3.3.5. Place a piece of Mylar film over all the layers.

6.3.3.6. Press a nylon ring down over the layers and around the nylon disc to form a tightly sealed package. Cut off the excess Mylar with scissors. Label the back of the assembly with an identification number.

6.3.3.7. Submit the samples to the count room for alpha scintillation counting and request a 60,000-s (overnight) count for each sample.

6.3.3.8. The count room data is corrected for background and reported in disintegrations per minute (dpm). Divide the dpm results by 2.22 to convert to pCi. Calculate the mean and standard deviation of the six plates and assign the value to the standard.

6.4. Gross beta.

6.4.1. Spike QC samples with a ^{90}Sr standard in 2 M HCl at a concentration of approximately 180 pCi/mL.

6.4.2. Calibrate the ^{90}Sr standard against an Environmental Protection Agency (EPA)-certified ^{90}Sr standard solution in equilibrium with its daughter ^{90}Y.

6.4.3. Decay the ^{90}Sr standards each year.

6.4.3.1. The half-life of ^{90}Sr is 28.5 years.

6.4.3.2. The following equation describes the rate of physical decay of radionuclides:

$$A_t = A_o e^{-\lambda t} ,$$

where A_t = the activity at time t,
A_o = the activity at t = 0,
e = the base of natural logarithms, and
λ = (ln 2)/$T_{1/2}$, the decay constant, where $T_{1/2}$ the half-life.

7. Procedure

7.1. Prepare QC samples to equal at least 10% of the total number of samples to be analyzed. Periodically include a 2-g aliquot of the deep-well sand for use as a blank, omitting the ^{241}Am, the ^{90}Sr, or both.

7.2. Accurately weigh a 2-g aliquot of clean, dry sand into a 100-mL beaker. Record the weight of the sand on the beaker with a felt-tipped pen for reference by the analyst.

7.3. Spike an aliquot of ^{241}Am standard onto the sand in the beaker to reach the desired spike range for gross alpha.

7.4. The gross beta count is contributed equally by ^{90}Sr and the ^{90}Y radioactive decay products, which are in equilibrium in the ^{90}Sr standard solution.

7.4.1. The concentration of the ^{90}Sr standard solution is expressed in terms of ^{90}Sr although half the gross beta count is contributed by ^{90}Sr and the other half by ^{90}Y.

7.4.2. Divide the spike range in half and use the concentration of the ^{90}Sr standard solution to determine the amount of standard solution to use to reach the desired spike range of 1.25-5.0 pCi/g.

7.4.3. Spike the determined amount of ^{90}Sr standard onto the sand in the beaker.

7.4.4. The gross beta count will be within the spike range of 2.5-10.0 pCi/g because ^{90}Y in the standard solution contributes a gross beta count equal to that contributed by the ^{90}Sr. The beta concentration in the QC

sample based on the amount of ^{90}Sr added must be multiplied by 2 to determine the total gross beta concentration.

7.5. Label the beaker with a QC sample number.

7.6. Air dry the QC sample or dry it under a heat lamp to remove excess moisture.

7.7. Record QC standard information, sample number, sample description, spike amount, concentration, uncertainty, and all calculations in the QC Laboratory notebook and in the CVS and CVD data bases on the VAX.

8. Calculations

8.1. Determine background contributions to gross alpha and gross beta counts and add them to the spiked alpha and beta concentrations.

8.2. Record the gross alpha and gross beta concentrations on the sand as pCi/g.

8.3. Calculate the gross alpha spike concentration as in the following example.

8.3.1. If 50 μL of a 180-pCi/mL ^{241}Am standard is spiked onto 2.0000 g of sand, the gross alpha concentration in the sand is 4.5 pCi/g. Multiply the result by the RSD calculated in Step 2.1 to obtain the uncertainty.

$$\frac{(180\ \text{pCi/mL})\ (1\ \text{mL}/1000\ \mu\text{L})\ (50\ \mu\text{L})}{2.0000\ \text{g}} = 4.5\ \text{pCi/g} \quad .$$

8.3.2. Add the alpha background to the alpha concentration from the ^{241}Am spike to obtain the total gross alpha concentration in the QC sample.

$$4.5\ \text{pCi/g} + 4.9\ \text{pCi/g} = 9.4\ \text{pCi/g} \quad .$$

8.4. Calculate the gross beta concentration as in the following example.

8.4.1. If 35 μL of a 174-pCi/mL ^{90}Sr standard is spiked onto 2.000 g of sand, the beta concentration contributed by ^{90}Sr in the sample is 3.0 pCi/g.

$$\frac{(174\ \text{pCi/mL})\ (1\ \text{mL}/1000\ \mu\text{L})\ (35\ \mu\text{L})}{2.0000\ \text{g}} = 3.0\ \text{pCi/g} \quad .$$

8.4.2. Multiply the beta concentration contributed by ^{90}Sr by 2 to determine the combined gross beta concentration contributed by ^{90}Sr and ^{90}Y.

$$(3.0\ pCi/g)\ (2) = 6.0\ pCi/g \quad .$$

8.4.3. Multiply the result by the RSD calculated in Step 2.1 to obtain the uncertainty.

8.4.4. Add the beta background to the beta concentration contributed by the combined ^{90}Sr and ^{90}Y to obtain the total gross beta concentration in the QC sample.

$$6.0\ pCi/g + 2.4\ pCi/g = 8.4\ pCi/g \quad .$$

9. Proper Waste Disposal Practices

9.1. Liquid waste.

9.1. Dispose of radioactively contaminated liquid waste in a sink specifically approved for the disposal of aqueous radioactive waste and inorganic acids and bases.

9.2. Solid waste.

9.2.1. Accumulate radioactively contaminated solid waste, such as paper wipes, glass or plastic pipettes, plastic cups, and incorrectly spiked QC samples, in a covered metal can lined with a plastic bag and keep it segregated from nonradioactive solid waste.

9.2.2. Label the can to indicate its use for radioactively contaminated waste.

9.2.3. Open the can only for the period of time necessary to add waste.

9.2.4. When the plastic bag is full, seal it with tape, remove it from the can, and identify it as radioactively contaminated waste.

9.2.5. Put a new plastic bag into the waste can for continued use.

9.2.6. Place the sealed bag into a cardboard box lined with a plastic bag and labelled to indicate its use for radioactively contaminated waste.

9.2.7. When the cardboard box is full, seal the plastic bag liner and the box.

9.2.8. Mark the box as radioactively contaminated compactable waste and reference the current Waste Profile Request form (WPRF) describing the waste in the box on the outside of the box.

9.2.9. Line a new box with a plastic bag and label it for continued use.

9.2.10. Complete the current Radioactive Solid Waste Record (RSWD) form describing the full, sealed box of waste. Reference the current WPRF number on the RSWD.

9.2.11. The outside of the full box is surveyed for radioactive contamination by a radiation protection technician. Record the results of the survey on the RSWD.

9.2.12. Submit the completed RSWD and a copy of the WPRF to the Waste Management group for approval.

9.3. Waste pickup.

9.3.1. After the RSWD describing the full box of solid waste has been approved by the Waste Management group, request pickup of the box by the contractor approved for the transportation of radioactively contaminated waste. A written job order may be required to request pickup of waste.

9.3.2. The RSWD and a copy of the associated WPRF accompany the full box.

9.3.3. The waste is disposed of according to Laboratory policy.

10. Source Materials

10.1. M. A. Gautier, E. S. Gladney, N. L. Koski, E. A. Jones, and B. T. O'Malley, "Quality Assurance for Health and Environmental Chemistry: 1990," Los Alamos National Laboratory report LA-12208-MS (1991).

10.2. "Low-Level Radioactive Solid Waste," Administrative Requirement 10-2, in *Environment, Safety, and Health Manual*, Los Alamos National Laboratory Manual, Chapter 1 (most recent edition).

10.3. "Hazardous and Mixed Waste," Administrative Requirement 10-3, in *Environment, Safety, and Health Manual*, Los Alamos National Laboratory Manual, Chapter 1 (most recent edition).

Revisions or additions to the procedure are marked (▒▒▒▒). Where a section heading is marked, the entire section has been revised.

GROSS ALPHA AND GROSS BETA IN WATER — QC SAMPLE PREPARATION

Analyte: Gross alpha and gross beta	**Method No.:** QCR150
Matrix: Water	**Spike Range:** 5-20 pCi/L
Procedure: Proportional counting	**Accuracy and Precision:** Gross alpha 100% ± 3.4% RSD Gross beta 100% ± 3.2% RSD
Effective Date: 06/01/90	**Authors:** Nancy L. Koski Margaret A. Gautier

SAFETY NOTE: Before beginning this procedure, read all of the Material Safety Data Sheets for the chemicals listed in Sec. 5. Read Sec. 4.3 of the EM-9 Safety Manual for information on personal protective clothing and equipment. Read Sec. 9 of this procedure and Source Materials 10.2 and 10.3 for proper waste disposal practices.

1. Principle of Method

1.1. A QC sample for the determination of gross alpha and gross beta in water is prepared by spiking 0.5 M HCl with ^{241}Am and ^{90}Sr standards.

1.2. Gross beta is contributed equally by ^{90}Sr and by the ^{90}Y radioactive decay products that are in equilibrium in the ^{90}Sr standard solution.

1.3. QC samples are submitted for analysis with each analytical batch and are analyzed along with the unknown samples using the same analytical procedure.

2. Accuracy and Precision

2.1. The propagated error on QC preparation is based on the calibration error of the standard and on the error associated with use of the volumetric flask and of the pipette. A relative standard deviation (RSD) of 3.4% at the 1σ level for gross alpha and 3.2% at the 1σ level for gross beta has been calculated for the calibration, spiking, and dilution process based on the following function:

$$D = \frac{M1 \times M2}{M3} ,$$

where D = calculated result,
M1 = calibration error,
M2 = spiking error, and
M3 = dilution error.

2.1.1. Calculate relative variance using the following equation.

$$R_M^2 = \frac{\sigma^2}{\overline{X}^2} ,$$

where R^2_M = relative variance,
M = $M_1 \ldots M_n$ (variable),
σ^2 = variance (std dev^2), and
$\overline{X}$ = mean value of each variable (M).

2.1.2. Calculate percent relative standard deviation using the following equation.

$$S_{D_T} = \sqrt{R^2_{M1} + R^2_{M2} + R^2_{M3}} \times 100 ,$$

where SD_T = relative standard deviation (% error),
R^2_{M1} = relative variance of standard,
R^2_{M2} = relative variance of pipette,
R^2_{M3} = relative variance of volumetric flask, and
100 = factor to convert to percentage.

2.2. Recovery data for proportional counting of QC samples prepared during 1990 using this procedure are published in Source Material 10.1.

3. Collection and Storage of Samples

3.1. QC samples are prepared in an acid medium in a volumetric flask and stored in the flask at room temperature pending analysis.

4. Apparatus

4.1. Volumetric flasks: 1-L, glass, class A.

4.2. Auto-pipette: 100- and 1000-μL, Rainin or equivalent.

4.3. Pipette tips: disposable.

4.4. Labels printed with QC sample numbers.

4.5. Heat lamp.

4.6. Filter paper: 2.9-cm, Whatman No. 41 or equivalent.

4.7. Discs: stainless-steel, 2.22-cm-diam.

4.8. Alpha phosphor on Mylar: The phosphor is the standard silver-activated zinc sulfide. William B. Johnson & Associates, Inc., Research Park, Montville, NJ 07045.

4.9. Rings and discs: plastic rings and discs, nominal 1-in.-diam, molded of nylon. Control Molding Corp., 84 Granite Ave., Staten Island, NY 10303.

4.10. Mylar film: 1.5-in.-wide rolls, 0.0005 in. thick. Manufactured by E. I. duPont de Numours, retailed by Brownell, Inc., 85 Tenth Ave., New York, NY 10001.

5. Reagents

5.1. Hydrochloric acid (concentrated, reagent-grade).

6. Calibration and Standards

6.1. When they are available, dilute certified primary standards to make standards at the desired concentration.

6.2. Calibrate standard solutions which are not made from certified primary standards against an appropriate certified standard.

6.3. Gross alpha.

6.3.1. Spike QC samples with an ^{241}Am standard prepared in 4 N HNO_3 at a concentration of approximately 18 pCi/mL. Count the solution on a zinc sulfide scintillation system calibrated with National Institute of Standards and Technology (NIST) Standard Reference Material (SRM) 4904L-F, an ^{241}Am alpha-particle standard, using count room procedure CR340.

6.3.2. Calibrate the ^{241}Am standard against a NIST-certified ^{241}Am alpha-particle solution standard, such as NIST SRM 4322. Calibrate the standard solution annually by direct plating and alpha scintillation counting. Record all data in the QC Laboratory notebook.

6.3.3. Direct plating procedure.

6.3.3.1. Pipette a 200- to 300-μL aliquot of the standard to be calibrated on each of six 2.22-cm stainless-steel discs, and evaporate to dryness under a heat lamp.

6.3.3.2. Place a 2.9-cm filter paper on a molded nylon disc. The filter paper assures the package is tightly sealed when assembled.

6.3.3.3. Place the stainless-steel disc containing the sample on the filter paper, making sure it is centered.

6.3.3.4. Place a 0.875-in. phosphor paper over the stainless-steel disc (dull side against the disc).

6.3.3.5. Place a piece of Mylar film over all the layers.

6.3.3.6. Press a nylon ring down over the layers and around the nylon disc to form a tightly sealed package. Cut off the excess Mylar with scissors. Label the back of the assembly with an identification number.

6.3.3.7. Submit the samples to the count room for alpha scintillation counting and request a 60,000-s (overnight) count for each sample.

6.3.3.8. The count room data is corrected for background and reported in disintegrations per minute (dpm). Divide the dpm results by 2.22 to convert to pCi. Calculate the mean and standard deviation of the six plates and assign the value to the standard.

6.4. Gross beta.

6.4.1. Spike QC samples with a ^{90}Sr standard in 2 M HCl at a concentration of approximately 170 pCi/mL.

6.4.2. Calibrate the ^{90}Sr standard against an Environmental Protection Agency (EPA)-certified ^{90}Sr standard solution in equilibrium with its daughter ^{90}Y.

6.4.3. Decay the ^{90}Sr standards each year.

6.4.3.1. The half-life of ^{90}Sr is 28.5 years.

6.4.3.2. The following equation describes the rate of radioactive decay of radionuclides:

$$A_t = A_o e^{-\lambda t} ,$$

where A_t = the activity at time t,
A_o = the activity at t = 0,
e = the base of natural logarithms, and
λ = (ln 2)/$T_{1/2}$, the decay constant, where $T_{1/2}$ is the half-life.

7. Procedure

7.1. Prepare QC samples to equal at least 10% of the total number of samples to be analyzed. Periodically omit the ^{241}Am, the ^{90}Sr, or both from the QC sample for use as a blank.

7.2. Add approximately 800 mL of distilled water to a 1-L volumetric flask.

7.3. Add 43 mL of 12 M hydrochloric acid to the water in the flask to produce a final acid concentration of 0.5 M.

7.4. Spike an aliquot of ^{241}Am standard into the water in the flask to reach the desired spike range for gross alpha.

7.5. The gross beta count is contributed equally by ^{90}Sr and by the ^{90}Y radioactive decay products that are in equilibrium in the ^{90}Sr standard solution.

7.5.1. The concentration of the ^{90}Sr standard solution is expressed in terms of ^{90}Sr although half the gross beta count is contributed by ^{90}Sr and the other half by ^{90}Y.

7.5.2. Divide the spike range in half and use the concentration of the ^{90}Sr standard solution to determine the amount of standard solution to use to reach the desired spike range of 2.5-10.0 pCi/L.

7.5.3. Spike the determined amount of ^{90}Sr standard into the water in the flask.

7.5.4. The gross beta count will be within the spike range of 5-20 pCi/L because ^{90}Y in the standard solution contributes a gross beta count equal to that contributed by the ^{90}Sr. The beta concentration in the QC sample based on the amount of ^{90}Sr added must be multiplied by 2 to determine the total gross beta concentration.

7.6. Dilute the QC sample to volume with distilled water. Mix by inversion. Label the flask with a QC sample number and store at room temperature pending analysis.

7.7. Record QC standard information, sample number, sample description, spike amount, concentration, uncertainty, and all calculations in the QC Laboratory notebook and in the CVS and CVD data bases on the VAX.

8. Calculations

8.1. Record the concentration of gross alpha and gross beta in the QC sample as pCi/L.

8.2. Calculate the gross alpha spike concentration as in the following example.

8.2.1. If 300 μL of a 17.73-pCi/mL ^{241}Am standard is used to prepare a 1-L QC sample, the gross alpha concentration in the sample is 5.3 pCi/L.

$$\frac{(17.73\ \text{pCi/mL})\ (1\ \text{mL}/1000\ \mu\text{L})\ (300\ \mu\text{L})}{1\ \text{L}} = 5.3\ \text{pCi/L} \quad .$$

8.2.2. Multiply the result by the RSD calculated in Step 2.1 to obtain the uncertainty.

8.3. Calculate the gross beta spike concentration as in the following example.

8.3.1. If 25 μL of a 174-pCi/mL ^{90}Sr standard is used to prepare a 1-L QC sample, the beta concentration contributed by ^{90}Sr in the sample is 4.4 pCi/L.

$$\frac{(174\ \text{pCi/mL})\ (1\ \text{mL}/1000\ \mu\text{L})\ (25\mu\text{L})}{1\ \text{L}} = 4.4\ \text{pCi/L} \quad .$$

8.3.2. Multiply the beta concentration contributed by ^{90}Sr by 2 to determine the total gross beta concentration contributed by ^{90}Sr and ^{90}Y.

$$(4.4\ \text{pCi/L})\ (2) = 8.8\ \text{pCi/L} \quad .$$

8.3.3. Multiply the result by the RSD calculated in Step 2.1 to obtain the uncertainty.

9. Proper Waste Disposal Practices

9.1. Liquid waste.

9.1. Dispose of radioactively contaminated liquid waste in a sink specifically approved for the disposal of aqueous radioactive waste and inorganic acids and bases.

9.2. Solid waste.

9.2.1. Accumulate radioactively contaminated solid waste, such as paper wipes, glass or plastic pipettes, plastic cups, and incorrectly spiked QC samples, in a covered metal can lined with a plastic bag and keep it segregated from nonradioactive solid waste.

9.2.2. Label the can to indicate its use for radioactively contaminated waste.

9.2.3. Open the can only for the period of time necessary to add waste.

9.2.4. When the plastic bag is full, seal it with tape, remove it from the can, and identify it as radioactively contaminated waste.

9.2.5. Put a new plastic bag into the waste can for continued use.

9.2.6. Place the sealed bag into a cardboard box lined with a plastic bag and labeled to indicate its use for radioactively contaminated waste.

9.2.7. When the cardboard box is full, seal the plastic bag liner and the box.

9.2.8. Mark the box as radioactively contaminated compactable waste and reference the current Waste Profile Request form (WPRF) describing the waste in the box on the outside of the box.

9.2.9. Line a new box with a plastic bag and label it for continued use.

9.2.10. Complete the current Radioactive Solid Waste Record (RSWD) form describing the full, sealed box of waste. Reference the current WPRF number on the RSWD.

9.2.11. The outside of the full box is surveyed for radioactive contamination by a radiation protection technician. Record the results of the survey on the RSWD.

9.2.12. Submit the completed RSWD and a copy of the WPRF to the Waste Management group for approval.

9.3. Waste pickup.

9.3.1. After the RSWD describing the full box of solid waste has been approved by the Waste Management group, request pickup of the box by the contractor approved for the transportation of radioactively contaminated waste. A written job order may be required to request pickup of waste.

9.3.2. The RSWD and a copy of the associated WPRF accompany the full box.

9.3.3. The waste is disposed of according to Laboratory policy.

10. Source Materials

10.1. M. A. Gautier, E. S. Gladney, N. L. Koski, E. A. Jones, and B. T. O'Malley, "Quality Assurance for Health and Environmental Chemistry: 1990," Los Alamos National Laboratory report LA-12208-MS (1991).

10.2. "Low-Level Radioactive Solid Waste," Administrative Requirement 10-2, in *Environment, Safety, and Health Manual*, Los Alamos National Laboratory Manual, Chapter 1 (most recent edition).

10.3. "Chemical, Hazardous, and Mixed Waste," Administrative Requirement 10-3, in *Environment, Safety, and Health Manual*, Los Alamos National Laboratory Manual, Chapter 1 (most recent edition).

Revisions or additions to the procedure are marked (▒▒▒▒). Where a section heading is marked, the entire section has been revised.

PLUTONIUM AND AMERICIUM ON SOIL — QC SAMPLE PREPARATION

Analyte: Plutonium-238, Plutonium-239, and Americium-241	**Method No.:** QCR160
Matrix: Soil	**Spike Range:** 0.1 to 1 pCi/g
Procedure: Radiochemistry and alpha spectrometry	**Accuracy and Precision:** ^{238}Pu 100% ± 3.4% RSD ^{239}Pu 100% ± 3.1% RSD ^{241}Am 100% ± 4.5% RSD
Effective Date: 04/12/89	**Authors:** Nancy L. Koski Margaret A. Gautier

SAFETY NOTE: Before beginning this procedure, read all of the Material Safety Data Sheets for the chemicals listed in Sec. 5. Read Sec. 4.3 of the EM-9 Safety Manual for information on personal protective clothing and equipment. Read Sec. 9 of this procedure and Source Materials 10.7 and 10.8 for proper waste disposal practices.

1. Principle of Method

1.1. Blank sand is spiked with ^{238}Pu, ^{239}Pu, and ^{241}Am standards.

1.2. QC samples are submitted for analysis with each analytical batch and are analyzed along with the unknown samples using the same analytical procedure.

2. Accuracy and Precision

2.1. The propagated error on QC preparation is based on the calibration error from six sample plate preparations of the standard and on the error associated with use of the pipette and of the balance. Relative standard deviations (RSDs) of 3.4% for ^{238}Pu, 3.1% for ^{239}Pu, and 4.5% for ^{241}Am at the 1σ level have been calculated for the calibration, spiking, and weighing process based on the following function:

$$D = \frac{M1 \times M2}{M3},$$

where D = calculated result,
M1 = calibration error,
M2 = spiking error, and
M3 = weighing error.

2.1.1. Calculate relative variance using the following equation.

$$R_M^2 = \frac{\sigma^2}{\overline{X}^2} ,$$

where R^2_M = relative variance,
M = $M_1 \ldots M_n$ (variable),
σ^2 = variance (std dev^2), and
$\overline{X}$ = mean value of each variable (M).

2.1.2. Calculate percent relative standard deviation using the following equation.

$$SD_T = \sqrt{R^2_{M1} + R^2_{M2} + R^2_{M3}} \times 100 ,$$

where SD_T = relative standard deviation (% error),
R^2_{M1} = relative variance of standard,
R^2_{M2} = relative variance of pipette,
R^2_{M3} = relative variance of balance, and
100 = factor to convert to percentage.

2.2. Analysis by radiochemistry and alpha spectrometry of QC samples prepared during 1989 using this procedure gave a mean recovery of 89% ± 4% for ^{238}Pu and 99% ± 6% for ^{239}Pu at the 1σ level. The data are published in Source Material 10.1 and are summarized below.

PLUTONIUM SPIKE RECOVERY DURING 1989 AS A FUNCTION OF CONCENTRATION

	Spike range pCi/g	Mean ± SD (%)	Number of samples
^{238}Pu	0.05 to 0.1	87 ± 4	5
	0.1 to 0.3	90 ± 4	7
	0.3 to 0.6	89 ± 5	4
^{239}Pu	0.1 to 0.2	102 ± 7	7
	0.2 to 0.3	94 ± 4	6
	0.3 to 0.5	100 ± 1	3

3. Collection and Storage of Samples

3.1. Spiked QC samples are stored at room temperature pending analysis.

4. Apparatus

4.1. Bottles: 500-mL, high-density polyethylene.

4.2. Balance: 200-g capacity, 0.1-mg accuracy.

4.3. Auto-pipette: 100-μL, Rainin or equivalent.

4.4. Pipette tips: disposable.

4.5. Spatula.

4.6. Heat lamp.

4.7. Labels printed with QC sample numbers.

4.8. Filter paper: 2.9-cm, Whatman No. 41 or equivalent.

4.9. Discs: stainless-steel, 2.22-cm-diam.

4.10. Alpha phosphor on Mylar: The phosphor is the standard silver-activated zinc sulfide. William B. Johnson & Associates, Inc., Research Park, Montville, NJ 07045.

4.11. Rings and discs: plastic rings and discs, nominal 1-in.-diam, molded of nylon. Control Molding Corp., 84 Granite Ave., Staten Island, NY 10303.

4.12. Mylar film: 1.5-in.-wide rolls, 0.0005 in. thick. Manufactured by E. I. duPont de Nemours, retailed by Brownell, Inc., 85 Tenth Ave., New York, NY 10001.

5. Reagents

5.1. Sand. A clean and dry 10-g aliquot is required for each sample.

5.2. A suitable sand does not contain the analyte of interest and presents few interferences to the analytical method.

NOTE: Surface soils have been contaminated with radionuclides as a result of the use and testing of nuclear weapons. A suitable blank soil for this procedure would have been collected before World War II or would be collected from a deep well or other excavation where radioactive contamination is not likely to have occurred. Before use, a representative aliquot of soil is analyzed to determine if it will provide a suitably blank matrix.

6. Calibration and Standards

6.1. QC samples are spiked with ^{238}Pu and ^{239}Pu standards prepared in 2 N HNO_3 and with an ^{241}Am standard prepared in 4 N HNO_3. The plutonium standards are heated at 80°C for 2 h to convert Pu in the polymeric form to the ionic 4+ state.

6.2. The radionuclide standards should have concentrations of approximately 180 pCi/mL.

6.3. When they are available, certified primary standards should be diluted to make standards at the desired concentration.

6.4. Standard solutions which are not made from certified primary standards should be calibrated against an appropriate certified standard.

6.5. The ^{238}Pu standard should be calibrated against a NIST-certified ^{238}Pu alpha-particle solution standard, such as NIST SRM 4323. The standard solution should be recalibrated yearly by direct plating and alpha scintillation counting. Record all data in the QC Laboratory notebook.

6.6. The ^{239}Pu standard should be calibrated against a NIST-certified ^{239}Pu alpha-particle solution standard, such as NIST SRM 4331. The standard solution should be recalibrated yearly by direct plating and alpha scintillation counting. Record all data in the QC Laboratory notebook.

6.7. The ^{241}Am standard should be calibrated against a NIST-certified ^{241}Am alpha-particle solution standard, such as NIST SRM 4322. The standard solution should be recalibrated yearly by direct plating and alpha scintillation counting. Record all data in the QC Laboratory notebook.

6.8. All solutions are counted on a zinc sulfide scintillation system calibrated with National Institute of Standards and Technology (NIST) Standard Reference Material (SRM) 4904L-F, an ^{241}Am alpha-particle standard, using count room procedure CR340.

6.9. Direct plating procedure.

6.9.1. Pipette a 200- to 300-μL aliquot of the standard to be calibrated on each of six 2.22-cm stainless-steel discs and evaporate to dryness under a heat lamp.

6.9.2. Place a 2.9-cm filter paper on a molded nylon disc. The filter paper assures a tightly sealed package when assembled.

6.9.3. Place the stainless-steel disc containing the sample on the filter paper, making sure it is centered.

6.9.4. Place a 0.875-in. phosphor paper over the stainless-steel disc (dull side against the disc).

6.9.5. Place a piece of Mylar film over all the layers.

6.9.6. Press a nylon ring down over the layers and around the nylon disc to form a tightly sealed package. Cut off the excess Mylar with scissors. Label the back of the assembly with an identification number.

6.9.7. Submit the samples to the count room for alpha scintillation counting and request a 60,000-s (overnight) per sample count.

6.9.8. The count room data is corrected for background and reported in disintegrations per minute (dpm). Divide the dpm results by 2.22 to convert to pCi. Calculate the mean and standard deviation of the six plates and assign the value to the standard.

7. Procedure

7.1. Prepare QC samples to equal at least 10% of the total number of samples to be analyzed. Periodically analyze a 10-g aliquot of the unspiked sand as a blank.

7.2. Accurately weigh 10 g of clean, dry sand into a 500-mL high-density polyethylene bottle. Record the weight of sand on the polyethylene bottle with a felt-tipped pen for reference by the analyst.

7.3. Spike aliquots of the Pu and Am standard solutions onto the sand to reach the desired spike range.

7.4. Air-dry the samples or dry under a heat lamp until excess liquid is gone.

7.5. Cap the sample bottles and label with a QC sample number. The entire contents of the bottle must be analyzed.

7.6. Record QC standard information, sample number, sample description, spike amount, concentration, uncertainty, and all calculations in the QC Laboratory notebook and in the CVS and CVD data bases on the VAX.

8. Calculations

8.1. Record the concentration of ^{238}Pu, ^{239}Pu, and ^{241}Am on the sand as pCi/g.

8.2. Calculate spike concentrations as in the following example.

8.2.1. If 20 μL of a 175-pCi/mL ^{238}Pu standard is used to spike 10.0000 g of sand, the ^{238}Pu concentration in the sand is 0.35 pCi/g. Multiply the result by the RSD calculated in Step 2.1 to obtain the uncertainty.

$$\frac{\left(175\ \frac{pCi}{mL}\right)\left(\frac{mL}{1000\ \mu L}\right)(20\ \mu L)}{10.0000\ g} = 0.35\ \frac{pCi}{g}$$

8.3. Spike concentrations for ^{239}Pu and ^{241}Am are calculated like spike concentrations for ^{238}Pu using the equation in Step 8.2.1.

9. Proper Waste Disposal Practices

9.1. Solid waste.

9.1.1. Accumulate radioactively contaminated solid waste, such as paper wipes, glass or plastic pipettes, plastic cups, and incorrectly spiked QC samples, in a covered metal can lined with a plastic bag and keep it segregated from nonradioactive solid waste.

9.1.2. Label the can to indicate its use for radioactively contaminated waste.

9.1.3. Open the can only for the period of time necessary to add waste.

9.1.4. When the plastic bag is full, seal it with tape, remove it from the can, and identify it as radioactively contaminated waste.

9.1.5. Put a new plastic bag into the waste can for continued use.

9.1.6. Place the sealed bag into a cardboard box lined with a plastic bag and keep the box inside a metal compactable waste container. Reference to the current Waste Profile Request form (WPRF) describing the waste accompanies the sealed bag.

9.1.7. Label the metal container to indicate its use for radioactively contaminated waste.

9.1.8. When the cardboard box is full, seal the plastic bag liner and the box. Check the outside of the box for radioactive contamination and record the information in the Radioactive Waste Disposal logbook.

9.1.9. The radioactive solid waste coordinator marks the cardboard box as radioactively contaminated compactable waste and references the current WPRF numbers describing the waste in the box on the outside of the box and in the Radioactive Waste Disposal logbook.

9.1.10. Place a new lined cardboard box into the metal container for continued use.

9.1.11. Place the sealed box in a dumpster for compactable mixed waste.

9.2. Liquid waste.

9.2.1. Dispose of liquid waste that is radioactively contaminated in a sink specifically approved for the disposal of aqueous radioactive waste and inorganic acids and bases.

9.3. Waste pickup.

9.3.1. When the dumpster containing solid waste is full, the surface exposure rate of the dumpster is determined by a radiation protection technician and is recorded on the Radioactive Solid Waste Disposal (RSWD) Record form.

9.3.2. Reference all the WPRF numbers associated with the waste in the dumpster on the RSWD.

9.3.3. Request pickup by the Waste Management group of a full dumpster. The RSWD and all the associated WPRFs accompany the dumpster.

9.3.4. The Waste Management group disposes of the waste according to Laboratory policy.

10. Source Materials

10.1. M. A. Gautier, E. S. Gladney, N. L. Koski, M. B. Phillips, E. A. Jones, and B. T. O'Malley, "Quality Assurance for Health and Environmental Chemistry: 1989," Los Alamos National Laboratory report LA-11995-MS (1990).

10.2. *EML Procedures Manual*, 25th ed., H. L. Volchok and G. de Planque, Eds. (Environmental Measurements Laboratory, New York, August 1982).

10.3. National Institute of Standards and Technology, "Certificate of Analysis for Standard Reference Material 4323, Plutonium-238 Alpha-Particle Solution Standard" (National Institute of Standards and Technology, Washington, DC, November 1986).

10.4. National Institute of Standards and Technology, "Certificate of Analysis for Standard Reference Material 4322, Americium-241 Alpha-Particle Solution Standard" (National Institute of Standards and Technology, Washington, DC, November 1986).

10.5. National Institute of Standards and Technology, "Certificate of Analysis for Standard Reference Material 4331, Plutonium-239 Alpha-Particle Solution Standard" (National Institute of Standards and Technology, Washington, DC, March 1975).

10.6. National Institute of Standards and Technology, "Certificate of Analysis for Standard Reference Material 4904L-F, Alpha-Particle Standard" (National Institute of Standards and Technology, Washington, DC, April 1982).

10.7. "Low-Level Radioactive Solid Waste," Administrative Requirement 10-2, in *Environment, Safety, and Health Manual*, Los Alamos National Laboratory Manual, Chapter 1 (most recent edition).

10.8. "Chemical, Hazardous, and Mixed Waste," Administrative Requirement 10-3, in *Environment, Safety, and Health Manual*, Los Alamos National Laboratory Manual, Chapter 1 (most recent edition).

Revisions or additions to the procedure are marked (▒). Where a section heading is marked, the entire section has been revised.

RADIONUCLIDES ON VEGETATION ASH — QC SAMPLE PREPARATION

Analyte: Plutonium-238, Plutonium-239, Americium-241, and Strontium-90	**Method No:** QCR170
Matrix: Vegetation ash	**Spike Range:** 1 to 10 pCi/g
Procedure: Radiochemistry and alpha spectrometry or gas-flow proportional counting	**Accuracy and Precision:** ^{238}Pu 100% ± 3.5% RSD ^{239}Pu 100% ± 3.2% RSD ^{241}Am 100% ± 4.5% RSD ^{90}Sr 100% ± 3.2% RSD
Effective Date: 06/15/89	**Authors:** Nancy L. Koski Margaret A. Gautier

SAFETY NOTE: Before beginning this procedure, read all of the Material Safety Data Sheets for the chemicals listed in Sec. 5. Read Sec. 4.3 of the EM-9 Safety Manual for information on personal protective clothing and equipment. Read Sec. 9 of this procedure and Source Materials 10.7 and 10.8 for proper waste disposal practices.

1. Principle of Method

1.1. Blank vegetation ash is spiked with ^{238}Pu, ^{239}Pu, ^{241}Am, and ^{90}Sr standards.

1.2. QC samples are submitted for analysis with each analytical batch and are analyzed along with the unknown samples using the same analytical procedure.

2. Accuracy and Precision

2.1. The propagated error on QC preparation is based on the calibration error of the standard and on the error associated with use of the pipette and of the balance. Relative standard deviations (RSDs) of 3.5% for ^{238}Pu, 3.2% for ^{239}Pu, 4.5% for ^{241}Am, and 3.2% for ^{90}Sr at the 1σ level, has been calculated for the calibration, spiking, and weighing process based on the following function:

$$D = \frac{M1 \times M2}{M3} ,$$

where D = calculated result,
M1 = calibration error,
M2 = spiking error, and
M3 = weighing error.

2.1.1. Calculate relative variance using the following equation.

$$R_M^2 = \frac{\sigma^2}{\overline{X}^2} \quad ,$$

where R^2_M = relative variance,
M = $M_1 \ldots M_n$ (variable),
σ^2 = variance (std dev^2), and
$\overline{X}$ = mean value of each variable (M).

2.1.2. Calculate percent relative standard deviation using the following equation.

$$SD_T = \sqrt{R_{M1}^2 + R_{M2}^2 + R_{M3}^2} \times 100 \quad ,$$

where SD_T = relative standard deviation (% error),
R^2_{M1} = relative variance of standard,
R^2_{M2} = relative variance of pipette,
R^2_{M3} = relative variance of balance, and
100 = factor to convert to percentage.

2.2. Analysis by radiochemistry and alpha spectrometry of QC samples prepared during 1989 using this procedure gave a mean recovery of 90% ± 7% for ^{239}Pu, 98% ± 9% for ^{238}Pu, and 90% ± 9% for ^{241}Am. The data are published in Source Material 10.1 and are summarized below.

SPIKE RECOVERY DURING 1989 AS A FUNCTION OF CONCENTRATION

	Spike range pCi/g	Mean ± SD (%)	Number of samples
^{238}Pu	0.5 to 2.0	88 ± 3	3
	2.0 to 4.5	91 ± 10	3
^{239}Pu	0.5 to 1.5	94 ± 8	4
	1.5 to 2.0	107 ± 4	2
^{241}Am	1.0 to 2.0	93 ± 7	3
	2.0 to 4.0	85 ± 12	2

3. Collection and Storage of Samples

3.1. Spiked QC samples are covered with plastic wrap and stored at room temperature pending analysis.

4. Apparatus

4.1. Beakers: 600-mL, glass.

4.2. Balance: 300-g capacity, 0.1-mg accuracy.

4.3. Auto-pipette: 100-μL, Rainin or equivalent.

4.4. Pipette tips: disposable.

4.5. Plastic wrap.

4.6. Labels printed with QC sample numbers.

4.7. Filter paper: 2.9-cm, Whatman No. 41 or equivalent.

4.8. Discs: stainless-steel, 2.22-cm-diam.

4.9 Alpha phosphor on Mylar: The phosphor is the standard silver-activated zinc sulfide. William B. Johnson & Associates, Inc., Research Park, Montville, NJ 07045.

4.10. Rings and discs: plastic rings and discs, nominal 1-in.-diam, molded of nylon. Control Molding Corp., 84 Granite Ave., Staten Island, NY 10303.

4.11. Mylar film: 1.5-in.-wide rolls, 0.0005 in. thick. Manufactured by E. I. duPont de Nemours, retailed by Brownell, Inc., 85 Tenth Ave., New York, NY 10001.

5. Reagents

5.1. Vegetation ash. A 1-g aliquot is required for each sample.

5.2. A suitable vegetation ash does not contain the analyte of interest and presents few interferences to the analytical method. Commercially available dry pet or farm stock foods may provide a suitable vegetation ash. Previously analyzed vegetation ash samples that did not contain Pu, Am, or Sr may also be used as a QC matrix.

6. Calibration and Standards

6.1. QC samples are spiked with either ^{238}Pu and ^{239}Pu standards prepared in 2 N HNO_3, an ^{241}Am standard prepared in 4 N HNO_3, or a ^{90}Sr standard prepared in 2 M HCl. The plutonium standards are heated at 80°C for 2 h to convert Pu in the polymeric form to the ionic 4+ state.

6.2. The radionuclide standards should have concentrations of approximately 180 pCi/mL.

6.3. When they are available, certified primary standards should be diluted to make standards at the desired concentration.

6.4. Standard solutions which are not made from certified primary standards should be calibrated against an appropriate certified standard.

6.5. The ^{238}Pu standard should be calibrated against a NIST-certified ^{238}Pu alpha-particle solution standard, such as NIST SRM 4323. The standard solution should be recalibrated yearly by direct plating and alpha scintillation counting. Record all data in the QC Laboratory notebook.

6.6. The ^{239}Pu standard should be calibrated against a NIST-certified ^{239}Pu alpha-particle solution standard, such as NIST SRM 4331. The standard solution should be recalibrated yearly by direct plating and alpha scintillation counting. Record all data in the QC Laboratory notebook.

6.7. The ^{241}Am standard should be calibrated against a NIST-certified ^{241}Am alpha-particle solution standard, such as NIST SRM 4322. The standard solution should be recalibrated yearly by direct plating and alpha scintillation counting. Record all data in the QC Laboratory notebook

6.8. The Pu and Am solutions are counted on a zinc sulfide scintillation system calibrated with National Institute of Standards and Technology (NIST) Standard Reference Material (SRM) 4904L-F, and ^{241}Am alpha-particle standard, using count room procedure CR340.

6.9. Direct plating procedure.

6.9.1. Pipette a 200- to 300-μL aliquot of the standard to be calibrated on each of six 2.22-cm stainless-steel discs, and evaporate to dryness under a heat lamp.

6.9.2. Place a 2.9-cm filter paper on a molded nylon disc. The filter paper assures a tightly sealed package when assembled.

6.9.3. Place the stainless-steel disc containing the sample on the filter paper, making sure it is centered.

6.9.4. Place a 0.875-in. phosphor paper over the stainless steel disc (dull side against the disc).

6.9.5. Place a piece of Mylar film over all the layers.

6.9.6. Press a nylon ring down over the layers and around the nylon disc to form a tightly sealed package. Cut off the excess Mylar with scissors. Label the back of the assembly with an identification number.

6.9.7. Submit the samples to the count room for alpha scintillation counting and request a 60,000-s (overnight) per sample count.

6.9.8. The count room data is corrected for background and reported in disintegrations per minute (dpm). Divide the dpm results by 2.22 to convert to pCi. Calculate the mean and standard deviation of the six plates and assign the value to the standard.

6.10. The ^{90}Sr standard should be calibrated against a NIST or an Environmental Protection Agency (EPA)-certified ^{90}Sr standard solution in equilibrium with its daughter ^{90}Y.

6.11. Decay the ^{90}Sr standards each year

6.11.1. The half-life of ^{90}Sr is 28.5 years.

6.11.2. The following equation describes the rate of physical decay of radionuclides:

$$A_t = A_o e^{-\lambda t} ,$$

where A_t = the activity at time t,
A_o = the activity at t = 0,
e = the base of natural logarithms, and
λ = $(\ln 2)/T_{1/2}$, the decay constant, $T_{1/2}$ where is the half-life.

7. Procedure

7.1. Prepare QC samples to equal at least 10% of the total number of samples to be analyzed. Periodically analyze a 1-g aliquot of the unspiked vegetation ash as a blank.

7.2. Accurately weigh 1 g of vegetation ash into a 600-mL beaker. Record the weight of the ash on the beaker with a felt-tipped pen for reference by the analyst.

7.3. Spike aliquots of the Pu, Am, or Sr standard solutions onto the vegetation ash to reach the desired spike range.

7.4. Cover the beaker with plastic wrap and label it with a QC sample number. The entire contents of the beaker must be analyzed.

7.5. Record QC standard information, sample number, sample description, spike amount, concentration, uncertainty, and all calculations in the QC Laboratory notebook and in the CVS and CVD data bases on the VAX.

8. Calculations

8.1. Record the concentration of ^{238}Pu, ^{239}Pu, ^{241}Am, and ^{90}Sr on the vegetation ash as pCi/g.

8.2. Calculate spike concentrations as in the following example.

8.2.1. If 15 μL of a 175-pCi/mL ^{238}Pu standard is used to spike 1.0000 g of vegetation ash, the ^{238}Pu concentration in the ash is 2.6 pCi/g. Multiply the result by the RSD calculated in Step 2.1 to obtain the uncertainty.

$$\frac{\left(175\ \frac{\text{pCi}}{\text{mL}}\right)\left(\frac{\text{mL}}{1000\ \mu\text{L}}\right)(15\ \mu\text{L})}{1.0000\ \text{g}} = 2.6\ \frac{\text{pCi}}{\text{g}}$$

8.3. Spike concentrations for ^{239}Pu, ^{241}Am, and ^{90}Sr are calculated like spike concentrations for ^{238}Pu using the equation in Step 8.2.1.

9. Proper Waste Disposal Practices

9.1. Solid waste.

9.1.1. Accumulate radioactively contaminated solid waste, such as paper wipes, glass or plastic pipettes, plastic cups, and incorrectly spiked QC samples, in a covered metal can lined with a plastic bag and keep it segregated from nonradioactive solid waste.

9.1.2. Label the can to indicate its use for radioactively contaminated waste.

9.1.3. Open the can only for the period of time necessary to add waste.

9.1.4. When the plastic bag is full, seal it with tape, remove it from the can, and identify it as radioactively contaminated waste.

9.1.5. Put a new plastic bag into the waste can for continued use.

9.1.6. Place the sealed bag into a cardboard box lined with a plastic bag and keep the box inside a metal compactable waste container. Reference to the current Waste Profile Request form (WPRF) describing the waste accompanies the sealed bag.

9.1.7. Label the metal container to indicate its use for radioactively contaminated waste.

9.1.8. When the cardboard box is full, seal the plastic bag liner and the box. Check the outside of the box for radioactive contamination and record the information in the Radioactive Waste Disposal logbook.

9.1.9. The radioactive solid waste coordinator marks the cardboard box as radioactively contaminated compactable waste and references the current WPRF numbers describing the waste in the box on the outside of the box and in the Radioactive Waste Disposal logbook.

9.1.10. Place a new lined cardboard box into the metal container for continued use.

9.1.11. Place the sealed box in a dumpster for compactable mixed waste.

9.2. Liquid waste.

9.2.1. Dispose of liquid waste that is radioactively contaminated in a sink specifically approved for the disposal of aqueous radioactive waste and inorganic acids and bases.

9.3. Waste pickup.

9.3.1. When the dumpster containing solid waste is full, the surface exposure rate of the dumpster is determined by a radiation protection technician and is recorded on the Radioactive Solid Waste Disposal (RSWD) Record form.

9.3.2. Reference all the WPRF numbers associated with the waste in the dumpster on the RSWD.

9.3.3. Request pickup by the Waste Management group of a full dumpster. The RSWD and all the associated WPRFs accompany the dumpster.

9.3.4. The Waste Management group disposes of the waste according to Laboratory policy.

10. Source Materials

10.1. M. A. Gautier, E. S. Gladney, N. L. Koski, M. B. Phillips, E. A. Jones, and B. T. O'Malley, "Quality Assurance for Health and Environmental Chemistry: 1989," Los Alamos National Laboratory report LA-11995-MS (1990).

10.2. *EML Procedures Manual*, 25th ed., H.L. Volchok and G. de Planque, Eds. (Environmental Measurements Laboratory, New York, August 1982).

10.3. National Institute of Standards and Technology, "Certificate of Analysis for Standard Reference Material 4323, Plutonium-238 Alpha-Particle Solution Standard" (National Institute of Standards and Technology, Washington, DC, November 1986).

10.4. National Institute of Standards and Technology, "Certificate of Analysis for Standard Reference Material 4331, Plutonium-239 Alpha-Particle Solution Standard" (National Institute of Standards and Technology, Washington, DC, March 1975).

10.5. National Institute of Standards and Technology, "Certificate of Analysis for Standard Reference Material 4322, Americium-241 Alpha-Particle Solution Standard" (National Institute of Standards and Technology, Washington, DC, November 1986).

10.6. National Institute of Standards and Technology, "Certificate of Analysis for Standard Reference Material 4904L-F, Alpha-Particle Standard" (National Institute of Standards and Technology, Washington, DC, April 1982).

10.7. "Low-Level Radioactive Solid Waste," Administrative Requirement 10-2, in *Environment, Safety and Health Manual*, Los Alamos National Laboratory Manual, Chapter 1 (most recent edition).

10.8. "Chemical, Hazardous, and Mixed Waste," Administrative Requirement 10-3, in *Environment, Safety, and Health Manual*, Los Alamos National Laboratory Manual, Chapter 1 (most recent edition).

Revisions or additions to the procedure are marked (▒▒▒). Where a section heading is marked, the entire section has been revised.

PLUTONIUM AND AMERICIUM IN WATER — QC SAMPLE PREPARATION

Analyte: Plutonium-238, Plutonium-239, and Americium-241	**Method No.:** QCR180
Matrix: Water	**Spike Range:** 0.1 to 5 pCi/L
Procedure: Radiochemistry and alpha spectrometry	**Accuracy and Precision:** ^{238}Pu 100% ± 5.2% RSD ^{239}Pu 100% ± 1.7% RSD ^{241}Am 100% ± 1.9% RSD
Effective Date: 08/02/89	**Authors:** Nancy L. Koski Margaret A. Gautier

SAFETY NOTE: Before beginning this procedure, read all of the Material Safety Data Sheets for the chemicals listed in Sec. 5. Read Sec. 4.3 of the EM-9 Safety Manual for information on personal protective clothing and equipment. Read Sec. 9 of this procedure and Source Materials 10.7 and 10.8 for proper waste disposal practices.

1. Principle of Method

1.1. Acidified blank water is spiked with ^{238}Pu, ^{239}Pu, and ^{241}Am standards.

1.2. QC samples are submitted for analysis with each analytical batch and are analyzed along with the unknown samples using the same analytical procedure.

2. Accuracy and Precision

2.1. The propagated error on QC preparation is based on the calibration error from six sample plate preparations of the standard and on the error associated with use of the volumetric flask and of the pipette. Relative standard deviations (RSDs) of 5.2% for ^{238}Pu, 1.7% for ^{239}Pu, and 1.9% for ^{241}Am, at the 1σ level have been calculated for the calibration, spiking, and dilution process based on the following function:

$$D = \frac{M1 \times M2}{M3} ,$$

where D = calculated result,
M1 = calibration error,
M2 = spiking error, and
M3 = dilution error.

2.1.1. Calculate relative variance using the following equation.

$$R_M^2 = \frac{\sigma^2}{\overline{X}^2} ,$$

where R^2_M = relative variance,
M = $M_1 \ldots M_n$ (variable),
σ^2 = variance (std dev^2), and
$\overline{X}$ = mean value of each variable (M).

2.1.2. Calculate percent relative standard deviation using the following equation.

$$SD_T = \sqrt{R^2_{M1} + R^2_{M2} + R^2_{M3}} \times 100 ,$$

where SD_T = relative standard deviation (% error),
R^2_{M1} = relative variance of standard,
R^2_{M2} = relative variance of pipette,
R^2_{M3} = relative variance of volumetric flask, and
100 = factor to convert to percentage.

2.2. Analysis by radiochemistry and alpha spectrometry of QC samples prepared during 1989 using this procedure gave a mean recovery of 89% ± 6% for ^{238}Pu and 94% ± 11% for ^{239}Pu at the 1σ level. The data are published in Source Material 10.1 and are summarized below.

PLUTONIUM SPIKE RECOVERY DURING 1989
AS A FUNCTION OF CONCENTRATION

	Spike range pCi/g	Mean ± SD (%)	Number of samples
^{238}Pu	0.2 to 0.5	81 ± 15	3
	0.5 to 1.2	91 ± 6	7
^{239}Pu	0.2 to 0.5	86 ± 11	6
	0.5 to 1.0	99 ± 9	9

3. Collection and Storage of Samples

3.1. QC samples are prepared in an acid medium in a volumetric flask and are stored in the flask at room temperature pending analysis.

4. Apparatus

4.1. Volumetric flasks: 500-mL, glass, class A.

4.2. Auto-pipette: 100- and 1000-μL, Rainin or equivalent.

4.3. Pipette tips: disposable.

4.4. Pipette: 2-mL, class A volumetric.

4.5. Labels printed with QC sample numbers.

4.6. Heat lamp.

4.7. Filter paper: 2.9-cm, Whatman No. 41 or equivalent.

4.8. Discs: stainless-steel, 2.22-cm-diam.

4.9. Alpha phosphor on Mylar: The phosphor is the standard silver-activated zinc sulfide. William B. Johnson & Associates, Inc., Research Park, Montville, NJ 07045.

4.10. Rings and discs: plastic rings and discs, nominal 1-in.-diam, molded of nylon. Control Molding Corp., 84 Granite Ave., Staten Island, NY 10303.

4.11. Mylar film: 1.5-in.-wide rolls, 0.0005 in. thick. Manufactured by E. I. duPont de Nemours, retailed by Brownell, Inc., 85 Tenth Ave., New York, NY 10001.

5. Reagents

5.1. Hydrochloric acid (concentrated, reagent-grade).

6. Calibration and Standards

6.1. QC samples are spiked with ^{238}Pu and ^{239}Pu standards prepared in 2 N HNO_3 and with an ^{241}Am standard prepared in 4 N HNO_3. The plutonium standards are heated at a nominal temperature of 80°C for 2 h to convert Pu in the polymeric form to the ionic 4+ state. All solutions are counted on a zinc sulfide scintillation system calibrated with National Institute of Standards and Technology (NIST) Standard Reference Material (SRM) 4904L-F, an ^{241}Am alpha-particle standard, using count room procedure CR340.

6.2. The ^{238}Pu and ^{239}Pu standards should be at a concentration of approximately 2 pCi/mL. The ^{241}Am standard should be at a concentration of approximately 6 pCi/mL.

6.3. The ^{238}Pu standard was calibrated against a NIST-certified ^{238}Pu alpha-particle solution standard, such as NIST SRM 4323. Recalibrate the standard solution yearly by direct plating and alpha scintillation counting. Record all data in the QC Laboratory notebook.

6.4. The ^{239}Pu standard was calibrated against a NIST-certified ^{239}Pu alpha-particle solution standard, such as NIST SRM 4331. Recalibrate the standard solution yearly by direct plating and alpha scintillation counting. Record all data in the QC Laboratory notebook.

6.5. The ^{241}Am standard was calibrated against a NIST-certified ^{241}Am alpha-particle solution standard, such as NIST SRM 4322. Recalibrate the standard solution yearly by direct plating and alpha scintillation counting. Record all data in the QC Laboratory notebook.

6.6. Direct plating procedure.

6.6.1. Pipette a 200- to 300-μL aliquot of the standard to be calibrated on each of six 2.22-cm stainless-steel discs and evaporate to dryness under a heat lamp.

6.6.2. Place a 2.9-cm filter paper on a molded nylon disc. The filter paper assures a tightly sealed package when assembled.

6.6.3. Place the stainless-steel disc containing the sample on the filter paper, making sure it is centered.

6.6.4. Place a 0.875-in. phosphor paper over the stainless steel disc (dull side against the disc).

6.6.5. Place a piece of Mylar film over all the layers.

6.6.6. Press a nylon ring down over the layers and around the nylon disc to form a tightly sealed package. Cut off the excess Mylar with scissors. Label the back of the assembly with an identification number.

6.6.7. Submit the samples to the count room for alpha scintillation counting and request a 60,000-s (overnight) per sample count.

6.6.8. The count room data is corrected for background and reported in disintegrations per minute (dpm). Divide the dpm results by 2.22 to convert to pCi. Calculate the mean and standard deviation of the six plates and assign the value to the standard.

6.7. Alternatively, an Environmental Protection Agency (EPA) Plutonium in Water cross check sample may be used as a QC sample. After dilution and distribution of a cross check study, EM-9 transfers the remainder of the stock solution to a glass container for storage to prevent the loss of the radionuclides to the walls of the EPA polyethylene container.

6.7.1. The EPA records the concentration of the standard after dilution according to EPA instructions.

6.7.2. The concentration of the original stock solution must be back-calculated before it is used, taking the EPA dilution instructions into consideration.

7. Procedure

7.1. Prepare QC samples to equal at least 10% of the total number of samples to be analyzed. Periodically include an unspiked water sample acidified to 3 N with HCl as a blank.

7.2. Place approximately 300 mL of distilled water into a 500-mL volumetric flask.

7.3. Add 125 mL of 12 M HCl to produce a final acid concentration of 3 M.

7.4. Spike aliquots of the Pu and Am standard solutions into the water to reach the desired spike range.

7.5. Dilute the QC sample to volume using distilled water. Mix by inversion. Label the flask with a QC sample number and store at room temperature pending analysis.

7.6. EPA cross check standard.

7.6.1. The EPA standard contains only plutonium.

7.6.2. Back-calculate the concentration of the original stock before an aliquot is taken. See Step 8.3.

7.6.3. EPA recommends mixing the standard for 10 to 15 min before an aliquot is taken.

7.7. Record QC standard information, sample number, sample description, spike amount, concentration, uncertainty, and all calculations in the QC Laboratory notebook and in the CVS and CVD data bases on the VAX.

8. Calculations

8.1. Record the concentration of ^{238}Pu, ^{239}Pu, and ^{241}Am in the water as pCi/L.

8.2. Calculate spike concentrations as in the following example.

8.2.1. If 300 μL of a 2-pCi/mL ^{238}Pu standard is used to spike 450 mL of acidified water and the solution is diluted to 500 mL, the ^{238}Pu concentration in the acidified water is 1.2 pCi/L. Multiply the result by the RSD calculated in Step 2.1 to obtain the uncertainty.

$$\frac{(2\ \text{pCi/mL})\ (1\ \text{mL}/1000\ \mu\text{L})\ (300\ \mu\text{L})}{(500\ \text{mL})\ (1\ \text{L}/1000\ \text{mL})} = 1.2\ \text{pCi/L} \quad .$$

8.2.2. Spike concentrations for ^{239}Pu and ^{241}Am are calculated like spike concentrations for ^{238}Pu using the equation in Step 8.2.1.

8.3. If an EPA cross check Plutonium in Water sample will be used to make a QC standard for plutonium in water, the undiluted concentration of the cross check sample must first be calculated.

8.3.1. If the concentration of the EPA sample is 10.6 ± 1.1 pCi/L after dilution of a 500-mL aliquot to 4 L, the concentration of the undiluted sample is calculated as follows:

$$(10.6\ \text{pCi/L})\ (4\ \text{L}/500\ \text{mL})\ (1000\ \text{mL/L}) = 84.8\ \text{pCi/L} \quad .$$

The concentration of 84.8 pCi/L is then used to determine the aliquot used to spike the acidified water sample.

8.3.2. If 4 mL of the 84.8-pCi/L EPA sample is spiked into 400 mL of acidified water and is diluted to 500 mL with distilled water, the plutonium concentration is 0.68 pCi/L. Multiply the result by the RSD calculated in Step 2.1 to obtain the uncertainty.

$$\frac{(84.8\ \text{pCi/L})\ (1\ \text{L}/1000\ \text{mL})\ (4\ \text{mL})}{(500\ \text{mL})\ (1\ \text{L}/1000\ \text{mL})} = 0.68\ \text{pCi/L} \quad .$$

9. Proper Waste Disposal Practices

9.1. Solid waste.

9.1.1. Accumulate radioactively contaminated solid waste, such as paper wipes, glass or plastic pipettes, plastic cups, and incorrectly spiked QC samples, in a covered metal can lined with a plastic bag and keep it segregated from nonradioactive solid waste.

9.1.2. Label the can to indicate its use for radioactively contaminated waste.

9.1.3. Open the can only for the period of time necessary to add waste.

9.1.4. When the plastic bag is full, seal it with tape, remove it from the can, and identify it as radioactively contaminated waste.

9.1.5. Put a new plastic bag into the waste can for continued use.

9.1.6. Place the sealed bag into a cardboard box lined with a plastic bag and keep the box inside a metal compactable waste container. Reference to the current Waste Profile Request form (WPRF) describing the waste accompanies the sealed bag.

9.1.7. Label the metal container to indicate its use for radioactively contaminated waste.

9.1.8. When the cardboard box is full, seal the plastic bag liner and the box. Check the outside of the box for radioactive contamination and record the information in the Radioactive Waste Disposal logbook.

9.1.9. The radioactive solid waste coordinator marks the cardboard box as radioactively contaminated compactable waste and references the current WPRF numbers describing the waste in the box on the outside of the box and in the Radioactive Waste Disposal logbook.

9.1.10. Place a new lined cardboard box into the metal container for continued use.

9.1.11. Place the sealed box in a dumpster for compactable mixed waste.

9.2. Liquid waste.

9.2.1. Dispose of radioactively contaminated liquid waste in a sink specifically approved for the disposal of aqueous radioactive waste and inorganic acids and bases.

9.3. Waste pickup.

9.3.1. When the dumpster containing solid waste is full, the surface exposure rate of the dumpster is determined by a radiation protection technician and is recorded on the Radioactive Solid Waste Disposal (RSWD) Record form.

9.3.2. Reference all the WPRF numbers associated with the waste in the dumpster on the RSWD.

9.3.3. Request pickup by the Waste Management group of a full dumpster. The RSWD and all the associated WPRFs accompany the dumpster.

9.3.4. The Waste Management group disposes of the waste according to Laboratory policy.

10. Source Materials

10.1. M. A. Gautier, E. S. Gladney, N. L. Koski, M. B. Phillips, E. A. Jones, and B. T. O'Malley, "Quality Assurance for Health and Environmental Chemistry: 1989," Los Alamos National Laboratory report LA-11995-MS (1990).

10.2. *EML Procedures Manual*, 25th ed., H. L. Volchok and G. de Planque, Eds. (Environmental Measurements Laboratory, New York, August 1982).

10.3. National Institute of Standards and Technology, "Certificate of Analysis for Standard Reference Material 4323, Plutonium-238 Alpha-Particle Solution Standard" (National Institute of Standards and Technology, Washington, DC, November 1986).

10.4. National Institute of Standards and Technology, "Certificate of Analysis for Standard Reference Material 4331, Plutonium-239 Alpha-Particle Solution Standard" (National Institute of Standards and Technology, Washington, DC, March 1975).

10.5. National Institute of Standards and Technology, "Certificate of Analysis for Standard Reference Material 4322, Americium-241 Alpha-Particle Solution Standard" (National Institute of Standards and Technology, Washington, DC, November 1986).

10.6. National Institute of Standards and Technology, "Certificate of Analysis for Standard Reference Material 4904L-F, Alpha-Particle Standard" (National Institute of Standards and Technology, Washington, DC, April 1982).

10.7. "Low-Level Radioactive Solid Waste," Administrative Requirement 10-2, in *Environment, Safety, and Health Manual*, Los Alamos National Laboratory Manual, Chapter 1 (most recent edition).

10.8. "Chemical, Hazardous, and Mixed Waste," Administrative Requirement 10-3, in *Environment, Safety, and Health Manual*, Los Alamos National Laboratory Manual, Chapter 1 (most recent edition).

Revisions or additions to the procedure are marked (▒). Where a section heading is marked, the entire section has been revised.

PLUTONIUM-238 IN URINE — QC SAMPLE PREPARATION

Analyte: Plutonium-238	**Method No.:** QCR190
Matrix: Urine	**Spike Range:** 0.0-0.40 pCi/sample
Procedure: Radiochemistry and alpha spectrometry	**Accuracy and Precision:** 100% ± 3.7% RSD
Effective Date: 01/01/75	**Authors:** Margaret A. Gautier William D. Moss Nancy L. Koski

SAFETY NOTE: Before beginning this procedure, read all of the Material Safety Data Sheets for the chemicals listed in Sec. 5. Read Sec. 4.3 of the EM-9 Safety Manual for information on personal protective clothing and equipment. Read Sec. 9 of this procedure and Source Materials 10.11 to 10.13 for proper waste disposal.

1. Principle of Method

1.1. A pool of blank urine is prepared.

1.2. The blank urine is aliquoted and spiked with a known standard.

1.3. QC samples are submitted for analysis with each analytical batch and are analyzed along with the unknown samples using the same analytical procedure.

2. Accuracy and Precision

2.1. The propagated error on QC preparation is based on the calibration error from six sample plate preparations of the standard and on the error associated with the use of the graduated cylinder and the pipette. A relative standard deviation (RSD) of 3.7% at the 1σ level has been calculated for the calibration, spiking, and aliquoting process based on the following:

$$D = \frac{M1 \times M2}{M3 + M2} ,$$

where D = calculated result,
M1 = calibration error,
M2 = spiking error, and
M3 = aliquoting error.

2.1.1. Calculate relative variance using the following equation.

$$R_M^2 = \frac{\sigma^2}{\overline{X}^2} ,$$

where R^2_M = relative variance,
M = $M_1 \ldots M_n$ (variable),
σ^2 = variance (std dev^2), and
$\overline{X}$ = mean value of each variable (M).

2.1.2. Calculate percent relative standard deviation using the following equation.

$$SD_T = \sqrt{\frac{\left[R^2_{M1}\,(M_3 + M_2)^2 + M_3^{\,2}\,(R^2_{M2} + R^2_{M3})\right]}{(M_3 + M_2)^2}} \times 100 ,$$

where SD_T = relative standard deviation (% error),
R^2_{M1} = relative variance of standard,
M_3 = volume of cylinder,
M_2 = volume of pipette,
R^2_{M2} = relative variance of pipette,
R^2_{M3} = relative variance of cylinder, and
100 = factor to convert to percentage.

2.2. Analysis by radiochemistry and alpha spectrometry of QC samples prepared between 1984 and 1989 using this procedure gave a mean recovery of 99% ± 14% RSD. The data are published in Source Materials 10.1 through 10.6 and are summarized below.

PLUTONIUM-238 SPIKE RECOVERY AS A FUNCTION OF CONCENTRATION AFTER CORRECTION FOR PLUTONIUM-242 RECOVERY

Year	Spike level pCi/sample	Mean ± RSD (%)	Number of samples
1984	0.06	82 ± 20	13
	0.12	93 ± 12	15
	0.20	89 ± 11	14
	0.40	89 ± 9	16

PLUTONIUM-238 SPIKE RECOVERY AS A FUNCTION OF CONCENTRATION AFTER CORRECTION FOR PLUTONIUM-242 RECOVERY (cont)			
Year	Spike level pCi/sample	Mean ± RSD (%)	Number of samples
1985	0.06	98 ± 20	9
	0.12	97 ± 17	18
	0.20	100 ± 14	11
	0.40	103 ± 7	11
1986	0.06	97 ± 21	13
	0.12	104 ± 11	14
	0.20	103 ± 11	11
	0.40	110 ± 8	11
1987	0.06	102 ± 16	12
	0.12	95 ± 11	11
	0.19	105 ± 5	12
	0.39	96 ± 10	12
1988	0.06	102 ± 22	13
	0.12	97 ± 7	13
	0.19	102 ± 10	14
	0.39	100 ± 8	13
1989	0.06	102 ± 24	18
	0.12	99 ± 10	16
	0.19	114 ± 18	15
	0.39	100 ± 15	12

3. Collection and Storage of Samples

3.1. Urine is collected as needed from group personnel who have no known contact with radiation work and is used to form a pool of blank urine.

3.2. Spiked QC samples are refrigerated at a nominal temperature of 4°C pending analysis.

4. Apparatus

4.1. Beakers: 4- or 5-L, polyethylene.

4.2. Graduated cylinders: 500-mL.

4.3. Auto-pipette: 100- and 1000-μL, Rainin or equivalent.

4.4. Pipette tips: disposable.

4.5. Specimen containers: 16-oz jars with screw caps. VWR Scientific Catalog No. 16193-810 or equivalent.

4.6. Labels printed with QC sample numbers.

4.7. Heat lamp.

4.8. Filter paper: 2.9-cm, Whatman No. 41 or equivalent.

4.9. Discs: stainless steel, 2.22-cm diam.

4.10. Alpha phosphor on Mylar: The phosphor is the standard silver-activated zinc sulfide. William B. Johnson & Associates, Inc., Research Park, Montville, NJ 07045.

4.11. Rings and discs: plastic rings and discs, nominal 1-in. diam, molded of nylon. Control Molding Corp., 84 Granite Ave., Staten Island, NY 10303.

4.12. Mylar film: 1.5-in.-wide rolls, 0.0005 in. thick. Manufactured by E. I. duPont de Nemours, retailed by Brownell, Inc., 85 Tenth Ave., New York, NY 10001.

5. Reagents

5.1. None required.

6. Calibration and Standards

6.1. QC samples are spiked with a ^{238}Pu standard prepared in 2 N HNO_3 and heated at a nominal temperature of 80°C for 2 h to convert Pu in the polymeric form to the ionic 4+ state. The solution is counted on a zinc sulfide scintillation system calibrated with National Institute of Standards and Technology (NIST) Standard Reference Material (SRM) 4904L-F, an ^{241}Am alpha-particle standard, using count room procedure CR340.

6.2. The ^{238}Pu standard should be at a concentration of approximately 0.8 pCi/mL.

6.3. The ^{238}Pu standard was calibrated against a NIST-certified ^{238}Pu alpha-particle solution standard, such as SRM 4323. Recalibrate the standard solution yearly by direct plating and alpha scintillation counting. Record all data in the QC Laboratory notebook.

6.4. Direct plating procedure.

6.4.1. Pipette a 200- to 300-μL aliquot of the standard to be calibrated on each of six 2.22-cm stainless-steel discs, and evaporate to dryness under a heat lamp.

6.4.2. Place a 2.9-cm filter paper on a molded nylon disc. The filter paper assures a tightly sealed package when assembled.

6.4.3. Place the stainless-steel disc containing the sample on the filter paper. Be sure they are centered.

6.4.4. Place a 0.875-in. phosphor paper over the stainless-steel disc (dull side against the disc).

6.4.5. Place a piece of Mylar film over all the layers.

6.4.6. Press a nylon ring down over the layers and around the nylon disc to form a tightly sealed package. Cut off the excess Mylar with scissors. Label the back of the assembly with an identification number.

6.4.7. Submit the samples to the count room for alpha scintillation counting and request a 60,000-s (overnight) per sample count.

6.4.8. The count room data are corrected for background and reported in disintegrations per minute (dis/min). Divide the dis/min results by 2.22 to convert to pCi. Calculate the mean and standard deviation of the six plates and assign the value to the standard.

7. Procedure

7.1. Working with bodily fluids is discussed in detail in SOP-4, "Handling Human Biological Fluids," found in Appendix III of the EM-9 Safety Manual.

NOTE: Wear safety glasses, gloves, and a lab coat. Each day prepare a 1:100 dilution of household bleach in water in a spray bottle. Use this solution to thoroughly clean the work area after sample preparation is completed. Remove gloves, discard in the biohazard waste container, and wash hands with soap and water.

7.2. Prepare a pool from blank urine sufficient in volume to allow 400 mL for each QC sample to be prepared.

7.3. Prepare QC samples to equal at least 10% of the total number of samples to be analyzed. Include blank QCs prepared from the same urine pool as the spiked samples.

7.4. Record QC standard information, sample spike amount, concentration, and uncertainty in the QC Laboratory notebook.

7.5. Label bottles with QC sample numbers.

7.6. Aliquot 400 mL of blank urine into each sample bottle.

7.7. Spike the blank urine with aliquots of standard as determined in Step 7.3.

7.8. Screw caps on bottles and refrigerate at a nominal temperature of 4°C pending analysis.

7.9. Enter the spike concentrations of each QC into the CVS and CVD data bases on the VAX. This procedure is done annually because the same concentration levels are used throughout the year.

8. Calculations

8.1. Record spike concentrations as pCi/sample of urine.

8.2. Calculate the spike concentration for a 150 μL aliquot of ^{238}Pu standard using the following equation.

$$\text{pCi/sample per spike amount} = (0.8\ \text{pCi/mL}) \times 0.150\ \text{mL} = 0.12\ \text{pCi/sample}$$

8.3. Spike concentrations calculated in Step 8.2 are tabulated below.

Spike amount (μL)	Concentration (pCi/sample)	Uncertainty (± 3.7%)
75	0.06	0.002
150	0.12	0.004
250	0.20	0.007
500	0.40	0.015

9. Proper Waste Disposal Practices

9.1. Solid waste.

9.1.1. Radiochemically contaminated waste.

9.1.1.1. Radiochemically contaminated solid waste, such as paper wipes, glass or plastic pipettes, plastic cups, and incorrectly spiked QC samples, is accumulated in a covered metal can lined with a plastic bag and kept segregated from nonradioactive solid waste.

9.1.1.2. The can is labeled with a hazardous waste label and a label indicating its use for radiochemically contaminated waste.

9.1.1.3. The can is opened only for the time necessary to add waste.

9.1.1.4. When the plastic bag is full, it is sealed with tape, removed from the can, identified as radiochemically contaminated waste, and placed in a functioning chemical exhaust hood pending pickup by the Waste Management group.

9.1.1.5. A new plastic bag is put into the waste can for continued use.

9.1.2. Biohazardous waste.

9.1.2.1. Bottles used to collect blank urine for a quality control sample matrix are disposed of as uncontaminated laboratory trash after they have been rinsed with water in a laboratory sink.

9.1.2.2. Solid waste, such as paper wipes, plastic pipettes, and rubber gloves, contaminated with biohazardous material (primarily urine) is accumulated in a plastic bag labeled for the collection of biohazardous waste and is kept segregated from waste with no biohazard contamination.

9.1.2.3. Full bags of biohazardous waste are transferred to a cardboard box labeled with a biohazard label. The cardboard box is lined with a plastic bag bearing a biohazard label.

9.1.2.4. When the cardboard box is full, the liner bag and the box are sealed.

9.1.2.5. A new biohazard waste box lined with a plastic bag is prepared for further use.

9.2. Liquid waste.

9.2.1. Liquid waste contaminated with radionuclides is disposed of in a sink specifically approved for the disposal of aqueous radioactive waste and inorganic acids and bases.

9.3. Waste pickup.

9.3.1. Radioactively contaminated waste.

9.3.1.1. The surface exposure rate of the sealed bag of radiochemically contaminated solid waste is determined by a radiation protection technician and is recorded on the Radioactive Solid Waste Disposal (RSWD) Record form.

9.3.1.2. Pickup by the Waste Management group of a full bag of radiochemically contaminated solid waste is requested using the current Chemical Waste Disposal Request (CWDR) form. The current Waste Profile Request form (WPRF) that describes the waste is referenced on both disposal request forms.

9.3.1.3. The Waste Management group picks up the waste for disposal according to Laboratory policy.

9.3.2. Biohazardous waste.

9.3.2.1. Pickup of a full box of biohazardous waste is requested through the Waste Management group using the current Chemical Waste Disposal Request (CWDR) form. The current Waste Profile Request form (WPRF) that describes the waste is referenced on the CWDR.

9.3.2.2. The Waste Management group arranges for pick up and disposal of the waste by the company currently under contract with the Laboratory for that purpose.

10. Source Materials

10.1. M. A. Gautier, E. S. Gladney, and D. R. Perrin, "Quality Assurance for Health and Environmental Chemistry: 1984," Los Alamos National Laboratory report LA-10508-MS (1985).

10.2. M. A. Gautier, E. S. Gladney, and B. T. O'Malley, "Quality Assurance for Health and Environmental Chemistry: 1985," Los Alamos National Laboratory report LA-10813-MS (1986).

10.3. M. A. Gautier, E. S. Gladney, W. D. Moss, M. B. Phillips, and B. T. O'Malley, "Quality Assurance for Health and Environmental Chemistry: 1986," Los Alamos National Laboratory report LA-11114-MS (1987).

10.4. M. A. Gautier, E. S. Gladney, M. B. Phillips, and B. T. O'Malley, "Quality Assurance for Health and Environmental Chemistry: 1987," Los Alamos National Laboratory report LA-11454-MS (1988).

10.5. M. A. Gautier, E. S. Gladney, M. B. Phillips, and B. T. O'Malley, "Quality Assurance for Health and Environmental Chemistry: 1988," Los Alamos National Laboratory report LA-11637-MS (1989).

10.6. M. A. Gautier, E. S. Gladney, N. L. Koski, M. B. Phillips, E. A. Jones, and B. T. O'Malley, "Quality Assurance for Health and Environmental Chemistry: 1989," Los Alamos National Laboratory report LA-11995-MS (1990).

10.7. *EML Procedures Manual*, 25th ed., H. L. Volchok and G. de Planque, Eds. (Environmental Measurements Laboratory, New York, August 1982).

10.8. National Institute of Standards and Technology, "Certificate of Analysis for Standard Reference Material 4323, Plutonium-238 Alpha-Particle Solution Standard" (National Institute of Standards and Technology, Washington, DC, November 1986).

10.9. National Institute of Standards and Technology, "Certificate of Analysis for Standard Reference Material 4904L-F, Alpha-Particle Standard" (National Institute of Standards and Technology, Washington, DC, April 1982).

10.10. M. Phillips, "Handling Human Biological Fluids," Health and Environmental Chemistry SOP-4, September 1988, Los Alamos National Laboratory document.

10.11. "Low-Level Radioactive Solid Waste," Administrative Requirement 10-2, in *Environment, Safety, and Health Manual*, Los Alamos National Laboratory Manual, Chapter 1 (most recent edition).

10.12. "Chemical, Hazardous, and Mixed Waste," Administrative Requirement 10-3, in *Environment, Safety, and Health Manual*, Los Alamos National Laboratory Manual, Chapter 1 (most recent edition).

10.13. "Managing Infectious Waste," Administrative Requirement 10-7, in *Environment, Safety, and Health Manual*, Los Alamos National Laboratory Manual, Chapter 1 (most recent edition).

Revisions or additions to the procedure are marked (▒). Where a section heading is marked, the entire section has been revised.

PLUTONIUM-239 IN URINE — QC SAMPLE PREPARATION

Analyte: Plutonium-239	**Method No.:** QCR200
Matrix: Urine	**Spike Range:** 0.0-0.46 pCi/sample
Procedure: Radiochemistry and alpha spectrometry	**Accuracy and Precision:** 100% ± 3.3% RSD
Effective Date: 01/01/75	**Authors:** Margaret A. Gautier William D. Moss Nancy L. Koski

SAFETY NOTE: Before beginning this procedure, read all of the Material Safety Data Sheets for the chemicals listed in Sec. 5. Read Sec. 4.3 of the EM-9 Safety Manual for information on personal protective clothing and equipment. Read Sec. 9 of this procedure and Source Materials 10.11 to 10.13 for proper waste disposal.

1. Principle of Method

1.1. A pool of blank urine is prepared.

1.2. The blank urine is aliquoted and spiked with a known standard.

1.3. QC samples are submitted for analysis with each analytical batch and are analyzed along with the unknown samples using the same analytical procedure.

2. Accuracy and Precision

2.1. The propagated error on QC preparation is based on the calibration error from six sample plate preparations of the standard and on the error associated with use of the graduated cylinder and the pipette. A relative standard deviation (RSD) of 3.3% at the 1σ level has been calculated for the calibration, spiking, and aliquoting process based on the following:

$$D = \frac{M1 \times M2}{M3 + M2} ,$$

where D = calculated result,
M1 = calibration error,
M2 = spiking error, and
M3 = aliquoting error.

2.1.1. Calculate relative variance using the following equation.

$$R_M^2 = \frac{\sigma^2}{\overline{X}^2} ,$$

where R^2_M = relative variance,
M = $M_1 \ldots M_n$ (variable),
σ^2 = variance (std dev^2), and
$\overline{X}$ = mean value of each variable (M).

2.1.2. Calculate percent relative standard deviation using the following equation.

$$SD_T = \sqrt{\frac{\left[R_{M1}^2 (M_3 + M_2)^2 + M_3^2 (R_{M2}^2 + R_{M3}^2)\right]}{(M_3 + M_2)^2}} \times 100 ,$$

where SD_T = relative standard deviation (% error),
R^2_{M1} = relative variance of standard,
M_3 = volume of cylinder,
M_2 = volume of pipette,
R^2_{M2} = relative variance of pipette,
R^2_{M3} = relative variance of cylinder, and
100 = factor to convert to percentage.

2.2. Analysis by radiochemistry and alpha spectrometry of QC samples prepared between 1984 and 1989 using this procedure gave a mean recovery of 101% ± 12% RSD. The data are published in Source Materials 10.1 to 10.6 and are summarized below.

PLUTONIUM-239 SPIKE RECOVERY AS A FUNCTION OF CONCENTRATION AFTER CORRECTION FOR PLUTONIUM-242 RECOVERY

Year	Spike level pCi/sample	Mean ± RSD (%)	Number of samples
1984	0.06	96 ± 24	13
	0.15	99 ± 12	14
	0.23	99 ± 7	13
	0.46	96 ± 4	15
	1.47	89 ± 15	15

PLUTONIUM-239 SPIKE RECOVERY AS A FUNCTION OF CONCENTRATION AFTER CORRECTION FOR PLUTONIUM-242 RECOVERY (cont)

Year	Spike level pCi/sample	Mean ± RSD (%)	Number of samples
1985	0.06	102 ± 20	13
	0.15	108 ± 11	11
	0.23	98 ± 13	8
	0.45	110 ± 10	6
	1.50	96 ± 7	10
1986	0.06	108 ± 15	15
	0.15	107 ± 14	14
	0.23	100 ± 11	14
	0.46	100 ± 11	14
1987	0.06	105 ± 13	15
	0.15	105 ± 8	14
	0.22	102 ± 10	13
	0.44	103 ± 11	11
1988	0.06	99 ± 22	16
	0.15	96 ± 6	13
	0.22	99 ± 12	15
	0.44	103 ± 8	12
1989	0.06	98 ± 26	15
	0.15	99 ± 12	13
	0.22	101 ± 11	17
	0.44	100 ± 8	17

3. Collection and Storage of Samples

3.1. Urine is collected as needed from group personnel who have no known contact with radiation work and is used to form a pool of blank urine.

3.2. Spiked QC samples are refrigerated at a nominal temperature of 4°C pending analysis.

4. Apparatus

4.1. Beakers: 4- or 5-L, polyethylene.

4.2. Graduated cylinders: 500-mL.

4.3. Auto-pipette: 100- and 1000-μL, Rainin or equivalent.

4.4. Pipette tips: disposable.

4.5. Specimen containers: 16-oz jars with screw caps. VWR Scientific Catalog No. 16193-810 or equivalent.

4.6. Labels printed with QC sample numbers.

4.7. Heat lamp.

4.8. Filter paper: 2.9-cm, Whatman No. 41 or equivalent.

4.9. Discs: stainless steel, 2.22-cm diam.

4.10. Alpha phosphor on Mylar: The phosphor is the standard silver-activated zinc sulfide. William B. Johnson & Associates, Inc., Research Park, Montville, NJ 07045.

4.11. Rings and discs: plastic rings and discs, nominal 1-in. diam, molded of nylon. Control Molding Corp., 84 Granite Ave., Staten Island, NY 10303.

4.12. Mylar film: 1.5-in.-wide rolls, 0.0005 in. thick. Manufactured by E. I. duPont de Nemours, retailed by Brownell, Inc., 85 Tenth Ave., New York, NY 10001.

5. Reagents

5.1. None required.

6. Calibration and Standards

6.1. QC samples are spiked with a ^{239}Pu standard prepared in 2 N HNO_3 and heated at a nominal temperature of 80°C for 2 h to convert Pu in the polymeric form to the ionic 4+ state. The solution is counted on a zinc sulfide scintillation system calibrated with National Institute of Standards and Technology (NIST) Standard Reference Material (SRM) 4904L-F, an ^{241}Am alpha-particle standard, using count room procedure CR340.

6.2. The ^{239}Pu standard should be at a concentration of approximately 1.5 pCi/mL.

6.3. The ^{239}Pu standard was calibrated against a NIST-certified ^{239}Pu alpha-particle solution standard, such as SRM 4331. Recalibrate the standard solution yearly by direct plating and alpha scintillation counting. Record all data in the QC Laboratory notebook.

6.4. Direct plating procedure.

6.4.1. Pipette a 200- to 300-μL aliquot of the standard to be calibrated on each of six 2.22-cm stainless-steel discs, and evaporate to dryness under a heat lamp.

6.4.2. Place a 2.9-cm filter paper on a molded nylon disc. The filter paper assures a tightly sealed package when assembled.

6.4.3. Place the stainless-steel disc containing the sample on the filter paper, making sure it is centered.

6.4.4. Place a 0.875-in. phosphor paper over the stainless-steel disc (dull side against the disc).

6.4.5. Place a piece of Mylar film over all the layers.

6.4.6. Press a nylon ring down over the layers and around the nylon disc to form a tightly sealed package. Cut off the excess Mylar with scissors. Label the back of the assembly with an identification number.

6.4.7. Submit the samples to the count room for alpha scintillation counting and request a 60,000-s (overnight) per sample count.

6.4.8. The count room data are corrected for background and reported in disintegrations per minute (dis/min). Divide the dis/min results by 2.22 to convert to pCi. Calculate the mean and standard deviation of the six plates and assign the value to the standard.

7. Procedure

7.1. Working with bodily fluids is discussed in detail in SOP-4, "Handling Human Biological Fluids," found in Appendix III of the EM-9 Safety Manual.

NOTE: Wear safety glasses, gloves, and a lab coat. Each day prepare a 1:100 dilution of household bleach in water in a spray bottle. Use this solution to thoroughly clean the work area after sample preparation is completed. Remove gloves, discard in the biohazard waste container, and wash hands with soap and water.

7.2. Prepare a pool from blank urine sufficient in volume to allow 400 mL for each QC sample to be prepared.

7.3. Prepare QC samples to equal at least 10% of the total number of samples to be analyzed. Include blank QCs prepared from the same urine pool as the spiked samples.

7.4. Record QC standard information, sample spike amount, concentration, and uncertainty in the QC Laboratory notebook.

7.5. Label bottles with QC sample numbers.

7.6. Aliquot 400 mL of blank urine into each sample bottle.

7.7. Spike the blank urine with aliquots of standard as determined in Step 7.3.

7.8. Screw caps on bottles and refrigerate at a nominal temperature of 4°C pending analysis.

7.9. Enter the spike concentrations of each QC into the CVS and CVD data bases on the VAX. This procedure is done annually because the same concentration levels are used throughout the year.

8. Calculations

8.1. Record spike concentrations as pCi/sample of urine.

8.2. Calculate the spike concentration for a 300 μL aliquot of ^{239}Pu standard using the following equation:

$$x = (1.52 \text{ pCi/mL}) \times 0.300 \text{ mL} = 0.46 \text{ pCi/sample} ,$$

where x = pCi/sample per spike amount.

8.3. Spike concentrations calculated in Step 8.2 are tabulated below.

Spike amount (μL)	Concentration (pCi/sample)	Uncertainty (± 3.3%)
40	0.06	0.002
100	0.15	0.005
150	0.23	0.008
300	0.46	0.015

9. Proper Waste Disposal Practices

9.1. Solid waste.

9.1.1. Radiochemically contaminated waste.

9.1.1.1. Radiochemically contaminated solid waste, such as paper wipes, glass or plastic pipettes, plastic cups, and incorrectly spiked QC samples, is accumulated in a covered metal can lined with a plastic bag and kept segregated from nonradioactive solid waste.

9.1.1.2. The can is labeled with a hazardous waste label and a label indicating its use for radiochemically contaminated waste.

9.1.1.3. The can is opened only for the time necessary to add waste.

9.1.1.4. When the plastic bag is full, it is sealed with tape, removed from the can, identified as radiochemically contaminated waste, and placed in a functioning chemical exhaust hood pending pickup by the Waste Management group.

9.1.1.5. A new plastic bag is put into the waste can for continued use.

9.1.2. Biohazardous waste.

9.1.2.1. Bottles used to collect blank urine for a quality control sample matrix are disposed of as uncontaminated laboratory trash after they have been rinsed with water in a laboratory sink.

9.1.2.2. Solid waste, such as paper wipes, plastic pipettes, and rubber gloves, contaminated with biohazardous material (primarily urine) is accumulated in a plastic bag labeled for the collection of biohazardous waste and is kept segregated from waste with no biohazard contamination.

9.1.2.3. Full bags of biohazardous waste are transferred to a cardboard box labeled with a biohazard label. The cardboard box is lined with a plastic bag bearing a biohazard label.

9.1.2.4. When the cardboard box is full, the liner bag and the box are sealed.

9.1.2.5. A new biohazard waste box lined with a plastic bag is prepared for further use.

9.2. Liquid waste.

9.2.1. Liquid waste contaminated with radionuclides is disposed of in a sink specifically approved for the disposal of aqueous radioactive waste and inorganic acids and bases.

9.3. Waste pickup.

9.3.1. Radioactively contaminated waste.

9.3.1.1. The surface exposure rate of the sealed bag of radiochemically contaminated solid waste is determined by a radiation protection technician and is recorded on the Radioactive Solid Waste Disposal (RSWD) Record form.

9.3.1.2. Pickup by the Waste Management group of a full bag of radiochemically contaminated solid waste is requested using the current Chemical Waste Disposal Request (CWDR) form. The current Waste Profile Request form (WPRF) that describes the waste is referenced on both disposal request forms.

9.3.1.3. The Waste Management group picks up the waste for disposal according to Laboratory policy.

9.3.2. Biohazardous waste.

9.3.2.1. Pickup of a full box of biohazardous waste is requested through the Waste Management group using the current Chemical Waste Disposal Request (CWDR) form. The current Waste Profile Request form (WPRF) that describes the waste is referenced on the CWDR.

9.3.2.2. The Waste Management group arranges for pickup and disposal of the waste by the company currently under contract with the Laboratory for that purpose.

10. Source Materials

10.1. M. A. Gautier, E. S. Gladney, and D. R. Perrin, "Quality Assurance for Health and Environmental Chemistry: 1984," Los Alamos National Laboratory report LA-10508-MS (1985).

10.2. M. A. Gautier, E. S. Gladney, and B. T. O'Malley, "Quality Assurance for Health and Environmental Chemistry: 1985," Los Alamos National Laboratory report LA-10813-MS (1986).

10.3. M. A. Gautier, E. S. Gladney, W. D. Moss, M. B. Phillips, and B. T. O'Malley, "Quality Assurance for Health and Environmental Chemistry: 1986," Los Alamos National Laboratory report LA-11114-MS (1987).

10.4. M. A. Gautier, E. S. Gladney, M. B. Phillips, and B. T. O'Malley, "Quality Assurance for Health and Environmental Chemistry: 1987," Los Alamos National Laboratory report LA-11454-MS (1988).

10.5. M. A. Gautier, E. S. Gladney, M. B. Phillips, and B. T. O'Malley, "Quality Assurance for Health and Environmental Chemistry: 1988," Los Alamos National Laboratory report LA-11637-MS (1989).

10.6. M. A. Gautier, E. S. Gladney, N. L. Koski, M. B. Phillips, E. A. Jones, and B. T. O'Malley, "Quality Assurance for Health and Environmental Chemistry: 1989," Los Alamos National Laboratory report LA-11995-MS (1990).

10.7. *EML Procedures Manual*, 25th ed., H. L. Volchok and G. de Planque, Eds. (Environmental Measurements Laboratory, New York, August 1982).

10.8. National Institute of Standards and Technology, "Certificate of Analysis for Standard Reference Material 4331, Plutonium-239 Alpha-Particle Solution Standard" (National Institute of Standards and Technology, Washington, DC, March 1975).

10.9. National Institute of Standards and Technology, "Certificate of Analysis for Standard Reference Material 4904L-F, Alpha-Particle Standard" (National Institute of Standards and Technology, Washington, DC, April 1982).

10.10. M. Phillips, "Handling Human Biological Fluids," Health and Environmental Chemistry SOP-4, September 1988, Los Alamos National Laboratory document.

10.11. "Low-Level Radioactive Solid Waste," Administrative Requirement 10-2, in *Environment, Safety, and Health Manual*, Los Alamos National Laboratory Manual, Chapter 1 (most recent edition).

10.12. "Chemical, Hazardous, and Mixed Waste," Administrative Requirement 10-3, in *Environment, Safety, and Health Manual*, Los Alamos National Laboratory Manual, Chapter 1 (most recent edition).

10.13. "Managing Infectious Waste," Administrative Requirement 10-7, in *Environment, Safety, and Health Manual*, Los Alamos National Laboratory Manual, Chapter 1 (most recent edition).

Revisions or additions to the procedure are marked (▒). Where a section heading is marked, the entire section has been revised.

RADIONUCLIDES ON FILTER MEDIA — QC SAMPLE PREPARATION

Analyte: Plutonium-238, Plutonium-239, and Americium-241	**Method No.:** QCR210
Matrix: Filters	**Spike Range:** 0.45-2.25 pCi/filter
Procedure: Radiochemistry and alpha spectrometry	**Accuracy and Precision:** ^{238}Pu 100% ± 4.3% RSD ^{239}Pu 100% ± 1.9% RSD ^{241}Am 100% ± 1.9% RSD
Effective Date: 01/21/85	**Authors:** Margaret A. Gautier Nancy L. Koski

SAFETY NOTE: Before beginning this procedure, read all of the Material Safety Data Sheets for the chemicals listed in Sec. 5. Read Sec. 4.3 of the EM-9 Safety Manual for information on personal protective clothing and equipment. Read Sec. 9 of this procedure and Source Materials 10.11 and 10.12 for proper waste disposal practices.

1. Principle of Method

1.1. Blank sand is placed on a Microsorban filter and is spiked with ^{238}Pu, ^{239}Pu, and ^{241}Am standards. The standards are spiked onto sand because the filters are hydrophobic.

1.2. QC samples are submitted for analysis with each analytical batch and are analyzed along with the unknown samples using the same analytical procedure.

2. Accuracy and Precision

2.1. The propagated error on QC preparation is based on the calibration error from six sample plate preparations of the standard and on the error associated with use of the pipette. A relative standard deviation (RSD) of 4.3% for ^{238}Pu, 1.9% for ^{239}Pu, and 1.9% for ^{241}Am at the 1σ level has been calculated for the calibration, spiking, and weighing process based on the following function:

$$D = M1 \times M2 \quad ,$$

where D = calculated result,
M1 = calibration error, and
M2 = spiking error.

2.1.1. Calculate relative variance using the following equation.

$$R_M^2 = \frac{\sigma^2}{\overline{X}^2} ,$$

where R^2_M = relative variance,
M = $M_1 \ldots M_n$ (variable),
σ^2 = variance (std dev^2), and
$\overline{X}$ = mean value of each variable (M).

2.1.2. Calculate percent relative standard deviation using the following equation.

$$SD_T = \sqrt{R_{M1}^2 + R_{M2}^2} \times 100 ,$$

where SD_T = relative standard deviation (% error),
R^2_{M1} = relative variance of standard,
R^2_{M2} = relative variance of pipette, and
100 = factor to convert to percentage.

2.2. Analysis by radiochemistry and alpha spectrometry of QC samples prepared during 1989 and 1990 using this procedure gave a mean recovery of 90% ± 13% for ^{238}Pu (N = 9), 105% ± 14% for ^{239}Pu (N = 12), and 83% ± 3% for ^{241}Am (N = 12) at the 1σ level. The data are published in Source Materials 10.1 to 10.5.

3. Collection and Storage of Samples

3.1. Microsorban filters are obtained from the sample submitter.

3.2. QC samples are prepared in a platinum crucible with a platinum cover and are kept at room temperature pending analysis.

4. Apparatus

4.1. Auto-pipette: 100- and 1000-μL, Rainin or equivalent.

4.2. Pipette tips: disposable.

4.3. Balance: 100-g minimum capacity, 0.1-mg accuracy.

4.4. Spatula.

4.5. Platinum crucibles: approximately 50-mL capacity with platinum covers. Each crucible should have a unique identifying number stamped or etched into it.

4.6. Heat lamp.

4.7. Microsorban filters: 8-cm-diam polyethylene filter obtained from the sample submitter.

4.8. Labels printed with QC sample numbers.

4.9. Filter paper: 2.9-cm, Whatman No. 41 or equivalent.

4.10. Discs: stainless-steel, 2.22-cm-diam.

4.11. Alpha phosphor on Mylar: The phosphor is the standard silver-activated zinc sulfide, William B. Johnson & Associates, Inc., Research Park, Montville, NJ 07045.

4.12. Rings and discs: plastic rings and discs, nominal 1-in.-diam, molded of nylon. Control Molding Corp., 84 Granite Ave., Staten Island, NY 10303.

4.13. Mylar film: 1.5-in.-wide rolls, 0.0005 in. thick. Manufactured by E. I. duPont de Nemours, retailed by Brownell, Inc., 85 Tenth Ave., New York, NY 10001.

5. Reagents

5.1. Sand. A clean, dry 0.1-g aliquot is required for each sample.

5.2. A suitable sand does not contain the analyte of interest and presents few interferences to the analytical method.

NOTE: Surface soils have been contaminated with radionuclides as a result of the use and testing of nuclear weapons. A suitable blank soil for this procedure would have been collected before World War II or would be collected from a deep well or other excavation where radioactive contamination is not likely to have occurred. Before use, a representative aliquot of soil is analyzed to determine if it will provide a suitably blank matrix.

6. Calibration and Standards

6.1. Spike QC samples with ^{238}Pu and ^{239}Pu standards prepared in 2 N HNO_3 and with an ^{241}Am standard prepared in 4 N HNO_3. Heat the plutonium standards at a nominal temperature of 80°C for 2 h to convert Pu in the polymeric form to the ionic +4 state. Count all solutions on a zinc sulfide scintillation system calibrated with National Institute of Standards and Technology (NIST) Standard Reference Material (SRM) 4904L-F, an ^{241}Am alpha-particle standard.

6.2. The ^{239}Pu standard should be at a concentration of approximately 2 pCi/mL. The ^{238}Pu and ^{241}Am standards should be at a concentration of approximately 17 pCi/mL.

6.3. When they are available, dilute certified primary standards to make standards at the desired concentration.

6.4. Calibrate standard solutions that are not made from certified primary standards against an appropriate certified standard.

6.5. Calibrate the ^{238}Pu standard against an NIST-certified ^{238}Pu alpha-particle solution standard, such as NIST SRM 4323. Calibrate the standard solution annually by direct plating and alpha scintillation counting. Record all data in the QC Laboratory notebook.

6.6. Calibrate the ^{239}Pu standard against an NIST-certified ^{239}Pu alpha-particle solution standard such as NIST SRM 4331. Calibrate the standard solution annually by direct plating and alpha scintillation counting. Record all data in the QC Laboratory notebook.

6.7. Calibrate the ^{241}Am standard against an NIST-certified ^{241}Am alpha-particle solution standard such as NIST SRM 4322. Calibrate the standard solution annually by direct plating and alpha scintillation counting. Record all data in the QC Laboratory notebook.

6.8. Count all solutions on a zinc sulfide scintillation system calibrated with National Institute of Standards and Technology (NIST) Standard Reference Material (SRM) 4904L-F, an ^{241}Am alpha-particle standard, using count room procedure CR340.

6.9. Direct plating procedure.

6.9.1. Pipette a 200- to 300-μL aliquot of the standard to be calibrated on to each of six 2.22-cm stainless steel discs, and evaporate to dryness under a heat lamp.

6.9.2. Place a 2.9-cm filter paper on a molded nylon disc. The filter paper assures the package is tightly sealed when assembled.

6.9.3. Place the stainless-steel disc containing the sample on the filter paper, making sure it is centered.

6.9.4. Place a 0.875-in. phosphor paper over the stainless steel disc (dull side against the disc).

6.9.5. Place a piece of Mylar film over all the layers.

6.9.6. Press a nylon ring down over the layers and around the nylon disc to form a tightly sealed package. Cut off the excess Mylar with scissors. Label the back of the assembly with an identification number.

6.9.7. Submit the samples to the count room for alpha scintillation counting and request a 60,000-s (overnight) count for each sample.

6.9.8. The count room data is corrected for background and reported in disintegrations per minute (dpm). Divide the dpm results by 2.22 to convert to pCi. Calculate the mean and standard deviation of the six plates and assign the value to the standard.

7. Procedure

7.1. Prepare QC samples to equal at least 10% of the total number of samples to be analyzed. Periodically submit an unspiked filter as a blank.

7.2. Cut a Microsorban filter in half and fold it so that it fits into a 50-mL platinum crucible.

7.3. Place the crucible with the filter on the balance and tare the balance.

7.4. Weigh 0.1 g of clean, dry sand onto the filter. Because the filter is hydrophobic, the sand is used to absorb the Pu and Am standard solutions.

7.5. Spike aliquots of the Pu and Am standard solutions onto the sand to reach the desired spike range.

7.6. Dry the spiked sand and filter under a heat lamp.

7.7. A paper label should not be affixed to the platinum crucible because it will be destroyed during the ashing procedure.

7.8. Assign a QC sample number to the QC sample and note the unique identifying number that is etched or stamped onto the platinum crucible body. Make a list of the QC sample numbers and the corresponding crucible number.

7.9. When the sample is dry, cover the crucible with a platinum cover and keep it at room temperature pending analysis.

7.10. Record QC standard information, sample number, sample description, spike amount, concentration, uncertainty, and all calculations in the QC Laboratory notebook and in the CVS and CVD data bases on the VAX.

8. Calculations

8.1. Record the concentration of ^{238}Pu, ^{239}Pu, and ^{241}Am on the filter as pCi/filter.

8.2. Calculate the spike concentrations as in the following example.

8.2.1. The weight of the sand placed on top of the filter does not enter into the calculation.

8.2.2. If 80 μL of a 16.42-pCi/mL ^{238}Pu standard is spiked onto sand on the Microsorban filter, the ^{238}Pu concentration in the filter will be 1.3 pCi/filter. Multiply the result by the RSD calculated in Step 2.1 to obtain the uncertainty.

$$\frac{(16.42\ \text{pCi/mL})\ (1\ \text{mL}/1000\ \mu\text{L})\ (80\ \mu\text{L})}{\text{filter}} = 1.3\ \text{pCi/filter} \quad .$$

8.3. Spike concentrations for ^{239}Pu and ^{241}Am are calculated in the same way as spike concentrations for ^{238}Pu, using the equation in Step 8.2.2.

9. Proper Waste Disposal Practices

9.1. Liquid waste.

9.1. Dispose of radioactively contaminated liquid waste in a sink specifically approved for the disposal of aqueous radioactive waste and inorganic acids and bases.

9.2. Solid waste.

9.2.1. Accumulate radioactively contaminated solid waste, such as paper wipes, glass or plastic pipettes, plastic cups, and incorrectly spiked QC samples, in a covered metal can lined with a plastic bag and keep it segregated from nonradioactive solid waste.

9.2.2. Label the can to indicate its use for radioactively contaminated waste.

9.2.3. Open the can only for the time necessary to add waste.

9.2.4. When the plastic bag is full, seal it with tape, remove it from the can, and identify it as radioactively contaminated waste.

9.2.5. Put a new plastic bag into the waste can for continued use.

9.2.6. Place the sealed bag into a cardboard box lined with a plastic bag and labeled to indicate its use for radioactively contaminated waste.

9.2.7. When the cardboard box is full, seal the plastic bag liner and the box.

9.2.8. Mark the box as radioactively contaminated compactable waste and reference the current Waste Profile Request form (WPRF) describing the waste in the box on the outside of the box.

9.2.9. Line a new box with a plastic bag and label it for continued use.

9.2.10. Complete the current Radioactive Solid Waste Record (RSWD) form describing the full, sealed box of waste. Reference the current WPRF number on the RSWD.

9.2.11. The outside of the full box is surveyed for radioactive contamination by a radiation protection technician. Record the results of the survey on the RSWD.

9.2.12. Submit the completed RSWD and a copy of the WPRF to the Waste Management group for approval.

9.3. Waste pickup.

9.3.1. After the RSWD describing the full box of solid waste has been approved by the Waste Management group, request pickup of the box by the contractor approved for the transportation of radioactively contaminated waste. A written job order may be required to request pickup of waste.

9.3.2. The RSWD and a copy of the associated WPRF accompany the full box.

9.3.3. The waste is disposed of according to Laboratory policy.

10. Source Materials

10.1. M. A. Gautier, E. S. Gladney, and B. T. O'Malley, "Quality Assurance for Health and Environmental Chemistry: 1985," Los Alamos National Laboratory report LA-10813-MS (1986).

10.2. M. A. Gautier, E. S. Gladney, W. D. Moss, M. B. Phillips, and B. T. O'Malley, "Quality Assurance for Health and Environmental Chemistry: 1986," Los Alamos National Laboratory report LA-11114-MS (1987).

10.3. M. A. Gautier, E. S. Gladney, M. B. Phillips, and B. T. O'Malley, "Quality Assurance for Health and Environmental Chemistry: 1987," Los Alamos National Laboratory report LA-11454-MS (1988).

10.4. M. A. Gautier, E. S. Gladney, M. B. Phillips, and B. T. O'Malley, "Quality Assurance for Health and Environmental Chemistry: 1988," Los Alamos National Laboratory report LA-11637-MS (1989).

10.5. M. A. Gautier, E. S. Gladney, N. L. Koski, M. B. Phillips, E. A. Jones, and B. T. O'Malley, "Quality Assurance for Health and Environmental Chemistry: 1989," Los Alamos National Laboratory report LA-11995-MS (1990).

10.6. *EML Procedures Manual*, 25th ed., H.L. Volchok and G. de Planque, Eds. (Environmental Measurements Laboratory, New York, August 1982).

10.7. National Institute of Standards and Technology, "Certificate of Analysis for Standard Reference Material 4323, Plutonium-238 Alpha-Particle Solution Standard" (National Institute of Standards and Technology, Washington, DC, November 1986).

10.8. National Institute of Standards and Technology, "Certificate of Analysis for Standard Reference Material 4322, Americium-241 Alpha-Particle Solution Standard" (National Institute of Standards and Technology, Washington, DC, November 1986).

10.9. National Institute of Standards and Technology, "Certificate of Analysis for Standard Reference Material 4331, Plutonium-239 Alpha-Particle Solution Standard" (National Institute of Standards and Technology, Washington, DC, March 1975).

10.10. National Institute of Standards and Technology, "Certificate of Analysis for Standard Reference Material 4904L-F, Alpha-Particle Standard" (National Institute of Standards and Technology, Washington, DC, April 1982).

10.11. "Low-Level Radioactive Solid Waste," Administrative Requirement 10-2, in *Environment, Safety, and Health Manual*, Los Alamos National Laboratory Manual, Chapter 1 (most recent edition).

10.12. "Hazardous and Mixed Waste," Administrative Requirement 10-3, in *Environment, Safety, and Health Manual*, Los Alamos National Laboratory Manual, Chapter 1 (most recent edition).

Revisions or additions to the procedure are marked (▒▒▒▒). Where a section heading is marked, the entire section has been revised.

RADIUM-226 IN WATER — QC SAMPLE PREPARATION

Analyte: Radium-226	**Method No.:** QCR220
Matrix: Water	**Spike Range:** 0.5-5.0 pCi/L
Procedure: Proportional counting	**Accuracy and Precision:** 100% ± 2.1% RSD
Effective Date: 02/05/90	**Authors:** Nancy L. Koski Margaret A. Gautier

SAFETY NOTE: Before beginning this procedure, read all of the Material Safety Data Sheets for the chemicals listed in Sec. 5. Read Sec. 4.3 of the EM-9 Safety Manual for information on personal protective clothing and equipment. Read Sec. 9 of this procedure and Source Materials 10.3 and 10.4 for proper waste disposal practices.

1. Principle of Method

1.1. A QC sample for the determination of ^{226}Ra in water is prepared by spiking 0.12 M HCl with a ^{226}Ra standard.

1.2. QC samples are submitted for analysis with each analytical batch and are analyzed along with the unknown samples using the same analytical procedure.

2. Accuracy and Precision

2.1. The propagated error on QC preparation is based on the calibration error of the standard and on the error associated with use of the pipette and of the volumetric flask. A relative standard deviation (RSD) of 2.1% at the 1σ level has been calculated for the calibration, spiking, and dilution process based on the following function:

$$D = \frac{M1 \times M2}{M3} ,$$

where D = calculated result,
M1 = calibration error,
M2 = spiking error, and
M3 = dilution error.

2.1.1. Calculate relative variance using the following equation.

$$R_M^2 = \frac{\sigma^2}{\overline{X}^2} ,$$

where R^2_M = relative variance,
M = $M_1 \ldots M_n$ (variable),
σ^2 = variance (std dev^2), and
$\overline{X}$ = mean value of each variable (M).

2.1.2. Calculate percent relative standard deviation using the following equation.

$$S_{D_T} = \sqrt{R^2_{M1} + R^2_{M2} + R^2_{M3}} \times 100 ,$$

where S_{D_T} = relative standard deviation (% error),
R^2_{M1} = relative variance of standard,
R^2_{M2} = relative variance of pipette,
R^2_{M3} = relative variance of volumetric flask, and
100 = factor to convert to percentage.

2.2. Analysis by proportional counting of QC samples (N = 4) prepared during 1990 using this procedure gave a mean recovery of 81% ± 22% at the 1σ level. The data are published in Source Material 10.1.

3. Collection and Storage of Samples

3.1. QC samples are stored in volumetric flasks at room temperature pending analysis.

4. Apparatus

4.1. Volumetric flasks: 1-L.

4.2. Auto-pipette: 100- and 1000-μL, Rainin or equivalent.

4.3. Pipette tips: disposable.

4.4. Labels printed with QC sample numbers.

5. Reagents

5.1. Hydrochloric acid (concentrated, reagent-grade).

6. Calibration and Standards

6.1. QC samples are spiked with a ^{226}Ra standard in 0.1 M HNO_3 at a concentration of approximately 10 pCi/mL.

6.2. A certified ^{226}Ra standard, such as National Institute of Standards and Technology (NIST) Standard Reference Material (SRM) 4958 (gamma-ray standard), is diluted to produce a standard with a ^{226}Ra concentration of approximately 10 pCi/mL.

7. Procedure

7.1. Prepare QC samples to equal at least 10% of the total number of samples to be analyzed. Periodically include 1 L of 0.12 M HCl as a blank.

7.2. Add approximately 900 mL of distilled water to a 1-L volumetric flask.

7.3. Add 10 mL of 12 M hydrochloric acid to the water in the flask to produce 0.12 M acid.

7.4. Add an aliquot of ^{226}Ra standard to the water in the flask to reach the desired spike range.

7.5. Dilute the QC sample to volume with distilled water. Mix by inversion. Label the flask with a QC sample number and store at room temperature pending analysis.

7.6. Record QC standard information, sample number, sample description, spike amount, concentration, uncertainty, and all calculations in the QC Laboratory notebook and in the CVS and CVD data bases on the VAX.

8. Calculations

8.1. Record the concentration of ^{226}Ra in the QC sample as pCi/L.

8.2. Calculate spike concentrations as in the following example.

8.2.1. If 220 μL of a 10-pCi/mL ^{226}Ra standard is used to prepare a 1-L QC sample, the ^{226}Ra concentration in the sample will be 2.2 pCi/L. Multiply the result by the RSD calculated in Step 2.1 to obtain the uncertainty.

$$\frac{(10\ \text{pCi/mL})\ (1\ \text{mL}/1000\ \mu\text{L})\ (220\ \mu\text{L})}{1\ \text{L}} = 2.2\ \text{pCi/L}\ .$$

9. Proper Waste Disposal Practices

9.1. Solid waste.

9.1.1. Accumulate radioactively contaminated solid waste, such as paper wipes, glass or plastic pipettes, plastic cups, and incorrectly spiked QC samples, in a covered metal can lined with a plastic bag and keep it segregated from nonradioactive solid waste.

9.1.2. Label the can to indicate its use for radioactively contaminated waste.

9.1.3. Open the can only for the time necessary to add waste.

9.1.4. When the plastic bag is full, seal it with tape, remove it from the can, and identify it as radioactively contaminated waste.

9.1.5. Put a new plastic bag into the waste can for continued use.

9.1.6. Place the sealed bag into a cardboard box lined with a plastic bag and keep the box inside a metal compactable waste container. Reference to the current Waste Profile Request form (WPRF) describing the waste accompanies the sealed bag.

9.1.7. Label the metal container to indicate its use for radioactively contaminated waste.

9.1.8. When the cardboard box is full, seal the plastic bag liner and the box. Check the outside of the box for radioactive contamination and record the information in the Radioactive Waste Disposal logbook.

9.1.9. The radioactive solid waste coordinator marks the cardboard box as radioactively contaminated compactable waste and references the current WPRF numbers describing the waste in the box on the outside of the box and in the Radioactive Waste Disposal logbook.

9.1.10. Place a new lined cardboard box into the metal container for continued use.

9.1.11. Place the sealed box in a dumpster for compactable mixed waste.

9.2. Liquid waste.

9.2.1. Dispose of radioactively contaminated liquid waste in a sink specifically approved for the disposal of aqueous radioactive waste and inorganic acids and bases.

9.3. Waste pickup.

9.3.1. When the dumpster containing solid waste is full, the surface exposure rate of the dumpster is determined by a radiation protection technician and is recorded on the Radioactive Solid Waste Disposal (RSWD) Record form.

9.3.2. Reference all the WPRF numbers associated with the waste in the dumpster on the RSWD.

9.3.3. Request pickup by the Waste Management group of a full dumpster. The RSWD and all the associated WPRFs accompany the dumpster.

9.3.4. The Waste Management group disposes of the waste according to Laboratory policy.

10. Source Materials

10.1. M. A. Gautier, E. S. Gladney, N. L. Koski, E. A. Jones, and B. T. O'Malley, "Quality Assurance for Health and Environmental Chemistry: 1990," Los Alamos National Laboratory report LA-12208-MS (1991).

10.2. National Institute of Standards and Technology, "Certificate of Analysis for Radium-226" (National Institute of Standards and Technology, Washington, DC, March 1968).

10.3. "Low-Level Radioactive Solid Waste," Administrative Requirement 10-2, in *Environment, Safety, and Health Manual*, Los Alamos National Laboratory Manual, Chapter 1 (most recent edition).

10.4. "Chemical, Hazardous, and Mixed Waste," Administrative Requirement 10-3, in *Environment, Safety, and Health Manual*, Los Alamos National Laboratory Manual, Chapter 1 (most recent edition).

Revisions or additions to the procedure are marked (▒). Where a section heading is marked, the entire section has been revised.

STRONTIUM-90 ON SOIL — QC SAMPLE PREPARATION

Analyte: Strontium-90	**Method No.:** QCR230
Matrix: Sand	**Spike Range:** 5-45 pCi/g
Procedure: Proportional counting	**Accuracy and Precision:** 100% ± 3.0% RSD
Effective Date: 04/07/89	**Authors:** Nancy L. Koski Margaret A. Gautier

SAFETY NOTE: Before beginning this procedure, read all of the Material Safety Data Sheets for the chemicals listed in Sec. 5. Read Sec. 4.3 of the EM-9 Safety Manual for information on personal protective clothing and equipment. Read Sec. 9 of this procedure and Source Materials 10.3 and 10.4 for proper waste disposal practices.

1. Principle of Method

1.1. Blank sand is spiked with a ^{90}Sr standard. The sand is used in place of soil as the QC matrix for ^{90}Sr analysis by proportional counting.

1.2. QC samples are submitted for analysis with each analytical batch and are analyzed along with the unknown samples using the same analytical procedure.

2. Accuracy and Precision

2.1. The propagated error on QC preparation is based on the calibration error of the standard and on the error associated with use of the pipette and of the balance. A relative standard deviation (RSD) of 3.0% at the 1σ level has been calculated for the calibration, spiking, and weighing process based on the following function:

$$D = \frac{M1 \times M2}{M3} ,$$

where D = calculated result,
M1 = calibration error,
M2 = spiking error, and
M3 = weighing error.

2.1.1. Calculate relative variance using the following equation.

$$R_M^2 = \frac{\sigma^2}{\overline{X}^2} ,$$

where R^2_M = relative variance,
M = $M_1 \ldots M_n$ (variable),
σ^2 = variance (std dev^2), and
$\overline{X}$ = mean value of each variable (M).

2.1.2. Calculate percent relative standard deviation using the following equation.

$$SD_T = \sqrt{R_{M1}^2 + R_{M2}^2 + R_{M3}^2} \times 100 ,$$

where SD_T = relative standard deviation (% error),
R^2_{M1} = relative variance of standard,
R^2_{M2} = relative variance of pipette,
R^2_{M3} = relative variance of balance, and
100 = factor to convert to percentage.

2.2. Analysis by proportional counting of QC samples (N = 10) prepared during 1989 and 1990 using this procedure gave a mean recovery of 76% ± 9% at the 1σ level. The data are published in Source Material 10.1.

3. Collection and Storage of Samples

3.1. QC samples are stored in Teflon beakers covered with aluminum foil at room temperature pending analysis.

4. Apparatus

4.1. Beakers: 250-mL, Teflon.

4.2. Auto-pipette: 100- and 1000-μL, Rainin or equivalent.

4.3. Pipette tips: disposable.

4.4. Balance: 200-g capacity, 0.1-mg accuracy.

4.5. Spatula.

4.6. Aluminum foil.

4.7. Labels printed with QC sample numbers.

5. Reagents

5.1. Sand. A clean and dry 2-g aliquot is required for each sample.

5.2. A suitable sand does not contain the analyte of interest and presents few interferences to the analytical method.

NOTE: Surface soils have been contaminated with radionuclides as a result of the use and testing of nuclear weapons. A suitable blank soil for this procedure would have been collected before World War II or would be collected from a deep well or other excavation where radioactive contamination is not likely to have occurred. Before use, a representative aliquot of soil is analyzed to determine if it will provide a suitably blank matrix.

6. Calibration and Standards

6.1. When they are available, certified primary standards should be diluted to make a standard at the desired concentration.

6.2. Standard solutions which are not made from certified primary standards should be calibrated against an appropriate certified standard.

6.3. QC samples are spiked with a ^{90}Sr standard prepared in 2 M HCl at a concentration of approximately 870 pCi/mL.

6.4 The ^{90}Sr standard should be calibrated against an Environmental Protection Agency (EPA)-certified ^{90}Sr standard solution in equilibrium with its daughter ^{90}Y.

6.5. Decay the ^{90}Sr standards each year.

6.5.1. The half-life of ^{90}Sr is 28.5 years.

6.5.2. The following equation describes the rate of physical decay of radionuclides:

$$A_t = A_o e^{-\lambda t} ,$$

where A_t = the activity at desired time t,
A_o = the activity at t = 0,
e = the base of natural logarithms, and

λ = (ln 2)/$T_{1/2}$, the decay constant, where $T_{1/2}$ is the half-life.

7. Procedure

7.1. Prepare QC samples to equal at least 10% of the total number of samples to be analyzed. Periodically include a 2-g aliquot of the unspiked deep-well sand as a blank.

7.2. Accurately weigh a 2-g aliquot of clean, dry sand into a 250-mL Teflon beaker. Record the weight of the sand on the beaker with a felt-tipped pen for reference by the analyst.

7.3. Spike an aliquot of ^{90}Sr standard onto the sand to reach the desired spike range.

7.4. Because a paper label does not adhere well to a Teflon beaker, write the QC number assigned to the sample on the beaker with a pen and destroy the paper label associated with the sample number used. Cover the top of the beaker with aluminum foil and store it at room temperature pending analysis.

7.5. Record QC standard information, sample number, sample description, spike amount, concentration, uncertainty, and all calculations in the QC Laboratory notebook and in the CVS and CVD data bases on the VAX.

8. Calculations

8.1. Record the concentration of ^{90}Sr on the sand as pCi/g.

8.2. Calculate spike concentrations as in the following example.

8.2.1. If 15 μL of a 871-pCi/mL ^{90}Sr standard is used to spike 2.0000 g of sand, the ^{90}Sr concentration in the sand will be 6.5 pCi/g. Multiply the result by the RSD calculated in Step 2.1 to obtain the uncertainty.

$$\frac{\left(871\ \frac{\text{pCi}}{\text{mL}}\right)\left(\frac{1\ \text{mL}}{1000\ \mu\text{L}}\right)(15\ \mu\text{L})}{2.0000\ \text{g}} = 6.5\ \frac{\text{pCi}}{\text{g}}$$

9. Proper Waste Disposal Practices

9.1. Solid waste.

9.1.1. Accumulate radioactively contaminated solid waste, such as paper wipes, glass or plastic pipettes, plastic cups, and incorrectly spiked QC

samples, in a covered metal can lined with a plastic bag and keep it segregated from nonradioactive solid waste.

9.1.2. Label the can to indicate its use for radioactively contaminated waste.

9.1.3. Open the can only for the time necessary to add waste.

9.1.4. When the plastic bag is full, seal it with tape, remove it from the can, and identify it as radioactively contaminated waste.

9.1.5. Put a new plastic bag into the waste can for continued use.

9.1.6. Place the sealed bag into a cardboard box lined with a plastic bag and keep the box inside a metal compactable waste container. Reference to the current Waste Profile Request form (WPRF) describing the waste accompanies the sealed bag.

9.1.7. Label the metal container to indicate its use for radioactively contaminated waste.

9.1.8. When the cardboard box is full, seal the plastic bag liner and the box. Check the outside of the box for radioactive contamination and record the information in the Radioactive Waste Disposal logbook.

9.1.9. The radioactive solid waste coordinator marks the cardboard box as radioactively contaminated compactable waste and references the current WPRF numbers describing the waste in the box on the outside of the box and in the Radioactive Waste Disposal logbook.

9.1.10. Place a new lined cardboard box into the metal container for continued use.

9.1.11. Place the sealed box in a dumpster for compactable mixed waste.

9.2. Liquid waste.

9.2.1. Dispose of radioactively contaminated liquid waste in a sink specifically approved for the disposal of aqueous radioactive waste and inorganic acids and bases.

9.3. Waste pickup.

9.3.1. When the dumpster containing solid waste is full, the surface exposure rate of the dumpster is determined by a radiation protection technician and is recorded on the Radioactive Solid Waste Disposal (RSWD) Record form.

9.3.2. Reference all the WPRF numbers associated with the waste in the dumpster on the RSWD.

9.3.3. Request pickup by the Waste Management group of a full dumpster. The RSWD and all the associated WPRFs accompany the dumpster.

9.3.4. The Waste Management group disposes of the waste according to Laboratory policy.

10. Source Materials

10.1. M. A. Gautier, E. S. Gladney, N. L. Koski, M. B. Phillips, E. A. Jones, and B. T. O'Malley, "Quality Assurance for Health and Environmental Chemistry: 1989," Los Alamos National Laboratory report LA-11995-MS (1990).

10.2. US Environmental Protection Agency, "Calibration Certificate for Strontium-90" (Environmental Monitoring Systems Laboratory, Quality Assurance Division, Las Vegas, Nevada, June 1987).

10.3. "Low-Level Radioactive Solid Waste," Administrative Requirement 10-2, in *Environment, Safety, and Health Manual*, Los Alamos National Laboratory Manual, Chapter 1 (most recent edition).

10.4. "Chemical, Hazardous, and Mixed Waste," Administrative Requirement 10-3, in *Environment, Safety, and Health Manual*, in Los Alamos National Laboratory Manual, Chapter 1 (most recent edition).

Revisions or additions to the procedure are marked (▒). Where a section heading is marked, the entire section has been revised

STRONTIUM-90 IN WATER — QC SAMPLE PREPARATION

Analyte: Strontium-90	**Method No.:** QCR240
Matrix: Water	**Spike Range:** 200-400 pCi/L
Procedure: Proportional counting	**Accuracy and Precision:** 100% ± 3.2 % RSD
Effective Date: 11/28/89	**Authors:** Nancy L. Koski Margaret A. Gautier

SAFETY NOTE: Before beginning this procedure, read all of the Material Safety Data Sheets for the chemicals listed in Sec. 5. Read Sec. 4.3 of the EM-9 Safety Manual for information on personal protective clothing and equipment. Read Sec. 9 of this procedure and Source Materials 10.3 and 10.4 for proper waste disposal.

1. Principle of Method

1.1. A QC sample for the determination of ^{90}Sr in water is prepared by spiking 0.08 M HCl with a ^{90}Sr standard.

1.2. QC samples are submitted for analysis with each analytical batch and are analyzed along with the unknown samples using the same analytical procedure.

2. Accuracy and Precision

2.1. The propagated error on QC preparation is based on the calibration error of the standard and on the error associated with use of the pipette and the volumetric flask. A relative standard deviation (RSD) of 3.2% at the 1σ level has been calculated for the calibration, spiking, and dilution process based on the following:

$$D = \frac{M1 \times M2}{M3} ,$$

where D = calculated result,
M1 = calibration error,
M2 = spiking error, and
M3 = dilution error.

2.1.1. Calculate relative variance using the following equation.

$$R_M^2 = \frac{\sigma^2}{\overline{X}^2} ,$$

where R^2_M = relative variance,
M = $M_1 \ldots M_n$ (variable),
σ^2 = variance (std dev^2), and
$\overline{X}$ = mean value of each variable (M).

2.1.2. Calculate percent relative standard deviation using the following equation.

$$S_{D_T} = \sqrt{R_{M1}^2 + R_{M2}^2 + R_{M3}^2} \times 100 ,$$

where S_{D_T} = relative standard deviation (% error),
R^2_{M1} = relative variance of standard,
R^2_{M2} = relative variance of pipette,
R^2_{M3} = relative variance of volumetric flask, and
100 = factor to convert to percentage.

2.2. Analysis by proportional counting of QC samples (N = 4) prepared during 1990 using this procedure gave a mean recovery of 94% ± 10% at the 1σ level. The data are published in Source Material 10.1.

3. Collection and Storage of Samples

3.1. QC samples are stored in volumetric flasks at room temperature pending analysis.

4. Apparatus

4.1. Volumetric flasks: 500-mL, class A, glass.

4.2. Auto-pipette: 1000-μL, Rainin or equivalent.

4.3. Pipette tips: disposable.

4.4. Beakers: 600-mL, glass.

4.5. Plastic wrap.

4.6. Labels printed with QC sample numbers.

5. Reagents

5.1. Hydrochloric acid (concentrated, reagent-grade).

6. Calibration and Standards

6.1. When they are available, certified primary standards should be diluted to make a standard at the desired concentration.

6.2. Standard solutions that are not made from certified primary standards should be calibrated against an appropriate certified standard.

6.3. QC samples are spiked with a ^{90}Sr standard in 2 M HCl at a concentration of approximately 870 pCi/mL.

6.4. The ^{90}Sr standard should be calibrated against an Environmental Protection Agency (EPA)-certified ^{90}Sr standard solution in equilibrium with its daughter ^{90}Y.

6.5. Decay the ^{90}Sr standards each year.

6.5.1. The half-life of ^{90}Sr is 28.5 years.

6.5.2. The following equation describes the rate of radioactive decay of radionuclides:

$$A_t = A_o e^{-\lambda t} ,$$

where A_t = the activity at time t,
A_o = the activity at t = 0,
e = the base of natural logarithms,
λ = the decay constant = $(\ln 2)/T_{1/2}$, where $T_{1/2}$ is the half-life.

7. Procedure

7.1. Prepare QC samples to equal at least 10% of the total number of samples to be analyzed. Periodically include 500 mL of 0.08 M HCl as a blank.

7.2. Add approximately 400 mL of distilled water to a 500-mL volumetric flask.

7.3. Add 3.5 mL of 12 M hydrochloric acid to the water in the flask to produce 0.08 M acid.

7.4. Add an aliquot of ^{90}Sr standard to the water in the flask to reach the desired spike range.

7.5. Dilute the QC sample to volume with distilled water. Mix by inversion. Label the flask with a QC sample number, and store at room temperature pending analysis.

7.6. Record QC standard information, sample number, sample description, spike amount, concentration, uncertainty, and all calculations in the QC Laboratory notebook, and in the CVS and CVD data bases on the VAX.

8. Calculations

8.1. Record the concentration of ^{90}Sr in the QC sample as pCi/L.

8.2. Calculate spike concentrations as in the following example.

8.2.1. If 150 μL of a 870-pCi/mL ^{90}Sr standard is used to make a 500-mL QC sample, the ^{90}Sr concentration in the sample will be 261 pCi/L. Multiply the result by the RSD calculated in Step 2.1 to obtain the uncertainty.

$$\frac{\left(870\ \frac{\text{pCi}}{\text{mL}}\right)\left(\frac{1\ \text{mL}}{1000\ \mu\text{L}}\right)(150\ \mu\text{L})}{(500\ \text{mL})\left(\frac{1\ \text{L}}{1000\ \text{mL}}\right)} = 261\ \frac{\text{pCi}}{\text{L}}$$

9. Proper Waste Disposal Practices

9.1. Solid waste.

9.1.1. Radiochemically contaminated waste.

9.1.1.1. Radiochemically contaminated solid waste, such as paper wipes, glass or plastic pipettes, plastic cups, and incorrectly spiked QC samples, is accumulated in a covered metal can lined with a plastic bag and kept segregated from nonradioactive solid waste.

9.1.1.2. The can is labeled with a hazardous waste label and a label indicating its use for radiochemically contaminated waste.

9.1.1.3. The can is opened only for the time necessary to add waste.

9.1.1.4. When the plastic bag is full, it is sealed with tape, removed from the can, identified as radiochemically contaminated waste, and placed in a functioning chemical exhaust hood pending pickup by the Waste Management group.

9.1.1.5. A new plastic bag is put into the waste can for continued use.

9.2. Liquid waste.

9.2.1. Liquid waste contaminated with radionuclides is disposed of in a sink specifically approved for the disposal of aqueous radioactive waste and inorganic acids and bases.

9.3. Waste pickup.

9.3.1. Radioactively contaminated waste.

9.3.1.1. The surface exposure rate of the sealed bag of radiochemically contaminated solid waste is determined by a radiation protection technician and is recorded on the Radioactive Solid Waste Disposal (RSWD) Record form.

9.3.1.2. Pickup by the Waste Management group of a full bag of radiochemically contaminated solid waste is requested using the current Chemical Waste Disposal Request (CWDR) form. The current Waste Profile Request form (WPRF) that describes the waste is referenced on both disposal request forms.

9.3.1.3. The Waste Management group picks up the waste for disposal according to Laboratory policy.

10. Source Materials

10.1. M. A. Gautier, E. S. Gladney, N. L. Koski, E. A. Jones, and B. T. O'Malley, "Quality Assurance for Health and Environmental Chemistry: 1990," Los Alamos National Laboratory report LA-12208-MS (1991).

10.2. US Environmental Protection Agency "Calibration Certificate for Strontium-90" (Environmental Monitoring Systems Laboratory, Quality Assurance Division, Las Vegas, Nevada, June 1987).

10.3. "Low-Level Radioactive Solid Waste," Administrative Requirement 10-2, in *Environment, Safety, and Health Manual*, Los Alamos National Laboratory Manual, Chapter 1 (most recent edition).

10.4. "Chemical, Hazardous, and Mixed Waste," Administrative Requirement 10-3, in *Environment, Safety, and Health Manual*, Los Alamos National Laboratory Manual, Chapter 1 (most recent edition).

Revisions or additions to the procedure are marked (▒▒▒). Where a section heading is marked, the entire section has been revised.

TRITIUM AND PERCENT MOISTURE ON SOIL – QC SAMPLE PREPARATION

Analyte: Tritium and percent moisture	**Method No.:** QCR250
Matrix: Sand	**Spike Range:** Tritium 80-400,000 pCi/L or 2-10,000 pCi/sample percent moisture 2-5% H_2O
Procedure: Liquid scintillation counting and gravimetry	**Accuracy and Precision:** Tritium 100% ± 2.6% RSD percent moisture 100% ± 9% RSD
Effective Date: 04/07/89	**Authors:** Nancy L. Koski Margaret A. Gautier

SAFETY NOTE: Before beginning this procedure, read all of the Material Safety Data Sheets for the chemicals listed in Sec. 5. Read Sec. 4.3 of the EM-9 Safety Manual for information on personal protective clothing and equipment. Read Sec. 9 of this procedure and Source Materials 10.4 and 10.5 for proper waste disposal practices.

1. Principle of Method

1.1. Blank sand is aliquoted and spiked with a tritiated water standard.

1.2. QC samples are submitted for analysis with each analytical batch and are analyzed along with the unknown samples using the same analytical procedure.

2. Accuracy and Precision

2.1. Propagated error for tritium.

2.1.1. The propagated error on QC preparation is based on the calibration error of the standard and on the error associated with use of the pipette and of the volumetric flask. A relative standard deviation (RSD) of 2.6% at the 1σ level has been calculated for the calibration and spiking process based on the following function:

$$D = M1 \times M2 \quad ,$$

where D = calculated result,
M1 = calibration error, and
M2 = spiking error.

2.1.2. Calculate relative variance using the following equation.

$$R_M^2 = \frac{\sigma^2}{\overline{X}^2} ,$$

where R^2_M = relative variance,
M = $M_1 \ldots M_n$ (variable),
σ^2 = variance (std dev^2), and
$\overline{X}$ = mean value of each variable (M).

2.1.3. Calculate percent relative standard deviation using the following equation.

$$SD_T = \sqrt{R_{M1}^2 + R_{M2}^2} \times 100 ,$$

where SD_T = relative standard deviation (% error),
R^2_{M1} = relative variance of standard,
R^2_{M2} = relative variance of pipette, and
100 = factor to convert to percentage.

2.2. Propagated error for percent moisture.

2.2.1. The propagated error on QC preparation is based on the error associated with use of the analytical balance. An RSD of 9.0% has been calculated for the weighing process based on the following function:

$$D = \frac{M3}{M1 + M2} ,$$

where D = calculated result,
M3 = weighing error of water,
M1 = weighing error of first soil aliquot, and
M2 = weighing error of second soil aliquot.

2.2.2. Calculate relative variance using the following equation.

$$R_M^2 = \frac{\sigma^2}{\overline{X}^2} ,$$

where R^2_M = relative variance,
M = $M_1 \ldots M_n$ (variable),
σ^2 = variance (std dev^2), and
$\overline{X}$ = mean value of each variable (M).

2.2.3. Calculate percent relative standard deviation using the following equation.

$$SD_T = \frac{\sqrt{(R^2_{M3} + R^2_{M2})M_2^2 + (R^2_{M3} + R^2_{M1})M_1^2 + 2R^2_{M3}\, M_1\, M_2}}{(M_1 + M_2)} \times 100 ,$$

where SD_T = relative standard deviation (% error),
R^2_{M3} = relative variance of weight of water,
R^2_{M2} = relative variance of weight of second soil aliquot,
M_2 = weight of second soil aliquot,
R^2_{M1} = relative variance of weight of first soil aliquot,
M_1 = weight of first soil aliquot, and
100 = factor to convert to percentage.

2.3. Analysis by liquid scintillation counting of QC samples (N = 23) prepared during 1989 and 1990 using this procedure gave a mean recovery of 93% ± 6% RSD for tritium. Analysis by gravimetry of QC samples (N = 9) for percent moisture gave a mean recovery of 99% ± 5% RSD. The data are published in Source Material 10.1 and are summarized below.

TRITIUM SPIKE RECOVERY DURING 1989
AS A FUNCTION OF CONCENTRATION

Spike range nCi/L	Mean ± SD (%)	Number of samples
1 to 50	95 ± 5	13
50 to 100	93 ± 4	5
100 to 200	84 ± 5	3

3. Collection and Storage of Samples

3.1. QC samples are covered with plastic wrap and frozen pending analysis.

4. Apparatus

4.1. Beakers: 600-mL and 1-L.

4.2. Pipettes: 10-, 15-, 20-, and 25-mL, class A volumetric.

4.3. Desiccator.

4.4. Drying oven: capable of reaching at least 110°C.

4.5. Spatula.

4.6. Plastic wrap.

4.7. Labels printed with QC sample numbers.

4.8. Balance: 1-kg minimum capacity, 0.1-g accuracy.

5. Reagents

5.1. Sand. A clean and dry 500-g aliquot is required for each sample.

5.2. A suitable sand does not contain the analyte of interest and presents few interferences to the analytical method.

6. Calibration and Standards

6.1. QC samples are spiked with tritium standards that contain ^{3}H in the concentration range 80 to 400,000 pCi/L.

6.2. A 25-mL aliquot of a ^{3}H standard in the concentration range 80 to 400,000 pCi/L spiked onto 500.0 g of clean, dry sand will produce a QC sample containing ^{3}H in the concentration range 2 to 10,000 pCi/sample and a total moisture content of approximately 5% by weight. The volume of water spiked onto the sand may vary between 10 and 25 mL but must be at least 10 mL.

6.3. Decay the ^{3}H standards each year.

6.3.1. The half-life of ^{3}H is 12.35 years.

6.3.2. The following equation describes the rate of physical decay of radionuclides:

$$A_t = A_o e^{-\lambda t} ,$$

where A_t = the activity at desired time t,
A_o = the activity at t = 0,
e = the base of natural logarithms, and
λ = (ln 2)/$T_{1/2}$ or the decay constant, where $T_{1/2}$ is the half-life.

6.4. The ^3H standard was calibrated against a National Institute of Standards and Technology (NIST)-certified ^3H Standard Reference Material (SRM), such as NIST SRM 4927B, a solution of tritiated water. Recalibrate the standard solution yearly by liquid scintillation counting.

7. Procedure

7.1. Prepare QC samples to equal at least 10% of the total number of samples to be analyzed. Periodically add an aliquot of distilled water to a soil sample and include it as a blank for ^3H analysis.

7.2. Dry approximately 600 g of soil in a 1-L beaker at 105-110°C overnight.

7.3. Cool the soil in a desiccator.

7.4. Place a 600-mL beaker on a balance with a capacity of at least 1000 g. Tare the balance.

7.5. Add 300 g of soil to the beaker. Record the weight and tare the balance.

7.6. Pipette 10 to 25 mL of tritium standard onto the center of the soil. Record the weight and tare the balance.

7.7. Add 200 g of soil to the beaker to cover the wet soil, to bring the total soil weight to 500 ± 1 g and to achieve 2 to 5% H_2O. Record the final soil weight on the beaker with a felt-tipped pen for reference by the analyst.

7.8. Label the beaker with a QC sample number.

7.9. Cover the beaker with plastic wrap and freeze pending analysis.

7.10. Record QC standard information, sample number, sample description, spike amount, concentration, uncertainty, and all calculations in the QC Laboratory notebook and in the CVS and CVD data bases on the VAX.

8. Calculations

8.1. Record the weight percent of extractable (unbound) water (H_2O^-) using the total sample weight (e.g., 500 g of soil plus 25 g of added H_2O).

8.2. Record the concentration of tritium as pCi/L. The tritium is measured as pCi/L and not as pCi/g because the determination measures the tritium concentration in the water in the sample and not the tritium concentration on the soil. Tritium concentration can be related to sample weight through the percent of H_2O^- in the sample.

8.3. Calculate the spike concentrations as in the following example.

8.3.1. If 25 mL of a 200,000-pCi/L tritium standard is used to spike 500.0 g of soil, the concentration of tritium in the sample is 200,000 pCi/L (5000 pCi/25 mL). Multiply the result by the RSD calculated in Step 2.1.1 to obtain the uncertainty.

$$(200{,}000 \text{ pCi/L})\ (1 \text{ L}/1000 \text{ mL})\ (25 \text{ mL}) = 5{,}000 \text{ pCi/sample} \quad .$$

The percent moisture is approximately 5% H_2O^-. Multiply the result by the RSD calculated in Step 2.2.1 to obtain the uncertainty.

$$\frac{(25 \text{ mL } H_2O)\ (1 \text{ g/mL}) \times 100}{500.0 \text{ g soil} + 25.0 \text{ g } H_2O} = 4.8\% \ H_2O \quad .$$

9. Proper Waste Disposal Practices

9.1. Solid waste.

9.1.1. Accumulate radioactively contaminated solid waste, such as paper wipes, glass or plastic pipettes, plastic cups, and incorrectly spiked QC samples, in a covered metal can lined with a plastic bag and keep it segregated from nonradioactive solid waste.

9.1.2. Label the can to indicate its use for radioactively contaminated waste.

9.1.3. Open the can only for the time necessary to add waste.

9.1.4. When the plastic bag is full, seal it with tape, remove it from the can, and identify it as radioactively contaminated waste.

9.1.5. Put a new plastic bag into the waste can for continued use.

9.1.6. Place the sealed bag into a cardboard box lined with a plastic bag and keep the box inside a metal compactable waste container. Reference to the current Waste Profile Request form (WPRF) describing the waste accompanies the sealed bag.

9.1.7. Label the metal container to indicate its use for radioactively contaminated waste.

9.1.8. When the cardboard box is full, seal the plastic bag liner and the box. Check the outside of the box for radioactive contamination and record the information in the Radioactive Waste Disposal logbook.

9.1.9. The radioactive solid waste coordinator marks the cardboard box as radioactively contaminated compactable waste and references the current WPRF numbers describing the waste in the box on the outside of the box and in the Radioactive Waste Disposal logbook.

9.1.10. Place a new lined cardboard box into the metal container for continued use.

9.1.11. Place the sealed box in a dumpster for compactable mixed waste.

9.2. Liquid waste.

9.2.1. Dispose of radioactively contaminated liquid waste in a sink specifically approved for the disposal of aqueous radioactive waste and inorganic acids and bases.

9.3. Waste pickup.

9.3.1. When the dumpster containing solid waste is full, the surface exposure rate of the dumpster is determined by a radiation protection technician and is recorded on the Radioactive Solid Waste Disposal (RSWD) Record form.

9.3.2. Reference all the WPRF numbers associated with the waste in the dumpster on the RSWD.

9.3.3. Request pickup by the Waste Management group of a full dumpster. The RSWD and all the associated WPRFs accompany the dumpster.

9.3.4. The Waste Management group disposes of the waste according to Laboratory policy.

10. Source Materials

10.1. M. A. Gautier, E. S. Gladney, N. L. Koski, M. B. Phillips, E. A. Jones, and B. T. O'Malley, "Quality Assurance for Health and Environmental Chemistry: 1989," Los Alamos National Laboratory LA-11995-MS (1990).

10.2. National Institute of Standards and Technology, "Certificate of Analysis for Standard Reference Material 4927-B, Hydrogen-3" (National Institute of Standards and Technology, Washington, DC, January 1979).

10.3. M. P. Unterweger, B. M. Coursey, F. J. Schima, and W. B. Mann, "Preparation and Calibration of the 1978 National Bureau of Standards Tritiated-water Standards," *International Journal of Applied Radiation and Isotopes* **31**, 611-614 (1980).

10.4. "Low-Level Radioactive Solid Waste," Administrative Requirement 10-2, in *Environment, Safety, and Health Manual*," Los Alamos National Laboratory Manual, Chapter 1 (most recent edition).

10.5. "Chemical, Hazardous, and Mixed Waste," Administrative Requirement 10-3, in *Environment, Safety, and Health Manual*, Los Alamos National Laboratory Manual, Chapter 1 (most recent edition).

Revisions or additions to the procedure are marked (▒▒▒▒). Where a section heading is marked, the entire section has been revised.

TRITIUM IN URINE — QC SAMPLE PREPARATION

Analyte: Tritium	**Method No.:** QCR260
Matrix: Urine	**Spike Range:** 0.0-10.0 μCi/L
Procedure: Liquid scintillation counting	**Accuracy and Precision:** 100% ± 3.7% RSD
Effective Date: 01/01/75	**Authors:** Margaret A. Gautier William D. Moss Nancy L. Koski

SAFETY NOTE: Before beginning this procedure, read all of the Material Safety Data Sheets for the chemicals listed in Sec. 5. Read Sec. 4.3 of the EM-9 Safety Manual for information on personal protective clothing and equipment. Read Sec. 9 of this procedure and Source Materials 10.10 to 10.12 for proper waste disposal.

1. Principle of Method

1.1. A pool of blank urine is prepared.

1.2. The blank urine is aliquoted and spiked with a known standard.

1.3. QC samples are submitted for analysis with each routine analytical batch and are analyzed along with the unknown samples using the same analytical procedure.

2. Accuracy and Precision

2.1. The propagated error on QC preparation is based on the calibration error from six preparations of the standard and on the error associated with the use of the graduated cylinder and the pipette. A relative standard deviation (RSD) of 3.7% at the 1σ level has been calculated for the calibration, spiking, and aliquoting process based on the following:

$$D = \frac{M1 \times M2}{M3 + M2} ,$$

where D = calculated result,
M1 = calibration error,
M2 = spiking error, and
M3 = aliquoting error.

2.1.1. Calculate relative variance using the following equation.

$$R_M^2 = \frac{\sigma^2}{\overline{X}^2} ,$$

where R^2_M = relative variance,
M = $M_1 \ldots M_n$ (variable),
σ^2 = variance (std dev^2), and
$\overline{X}$ = mean value of each variable (M).

2.1.2. Calculate the percent relative standard deviation using the following equation.

$$S_{D_T} = \sqrt{\frac{\left[R^2_{M1} (M_3 + M_2)^2 + M_3^2 (R^2_{M2} + R^2_{M3})\right]}{(M_3 + M_2)^2}} \times 100 ,$$

where S_{D_T} = relative standard deviation (% error),
R^2_{M1} = relative variance of standard,
M_3 = volume of cylinder,
M_2 = volume of pipette,
R^2_{M2} = relative variance of pipette,
R^2_{M3} = relative variance of cylinder, and
100 = factor to convert to percentage.

2.2. Analysis by liquid scintillation counting of QC samples prepared between 1984 and 1989 using this procedure gave a mean recovery of 98% ± 6% RSD. The data are published in Source Materials 10.1 through 10.6 and are summarized below.

TRITIUM SPIKE RECOVERY AS A FUNCTION OF CONCENTRATION

Year	Spike level (μCi/L)	Mean ± RSD (%)	Number of samples
1984	3.38	95 ± 9	15
	6.76	91 ± 3	12
	10.13	92 ± 3	10
	13.51	92 ± 4	7
	16.89	92 ± 2	5
1985	3.29	98 ± 4	22
	6.57	95 ± 3	19

TRITIUM SPIKE RECOVERY AS A FUNCTION OF CONCENTRATION
(cont)

Year	Spike level (μCi/L)	Mean ± RSD (%)	Number of samples
1985	9.86	96 ± 5	15
	13.14	96 ± 2	12
	16.29	98 ± 2	9
1986	3.31	94 ± 3	22
	7.42	93 ± 4	22
	9.27	94 ± 3	18
	12.98	95 ± 3	16
	18.54	94 ± 4	18
1987	3.62	98 ± 6	34
	5.43	98 ± 7	38
	7.24	98 ± 5	39
	10.87	98 ± 5	27
1988	0.13	84 ± 23	16
	0.52	103 ± 10	41
	0.87	105 ± 8	41
	5.07	111 ± 8	41
	10.14	111 ± 7	39
1989	0.47	99 ± 14	27
	0.78	104 ± 14	27
	4.65	105 ± 14	28
	9.30	107 ± 13	26
	34.24	105 ± 14	25

3. Collection and Storage of Samples

3.1. Urine is collected as needed from group personnel who have no known contact with radiation work and is used to form a pool of blank urine.

3.2. Spiked QC samples are refrigerated at a nominal temperature of 4°C pending analysis.

4. Apparatus

4.1. Beakers: 4- or 5-L, polyethylene.

4.2. Graduated cylinders: 50-mL.

4.3. Auto-pipette: 100- and 1000-μL, Rainin or equivalent.

4.4. Pipette tips: disposable.

4.5. Specimen containers: 120-mL with screw caps, sterile inner surface. Catalog no. C8845-3, Baxter Health Care Corp., Tempe, AZ 85282, or equivalent.

4.6. Labels printed with QC sample numbers.

5. Reagents

5.1. None required.

6. Calibration and Standards

6.1. QC samples are spiked with tritium standards. The standards should be at a concentration of approximately 40 and 750 μCi/L.

6.2. Decay the tritium standard in January and July.

6.2.1. The half-life of tritium is 12.43 years.

6.2.2. The following equation describes the rate of physical decay of radionuclides:

$$A_t = A_o e^{-\lambda t} ,$$

where A_t = the activity at time t,
A_o = the activity at t = 0,
e = the base of natural logarithms,
λ = the decay constant = (ln 2)/$T_{1/2}$, where $T_{1/2}$ is the half-life.

6.3. The ^{3}H standard was calibrated against a National Institute of Standards and Technology (NIST)-certified ^{3}H solution of tritiated water, such as NIST Standard Reference Material (SRM) 4927B. Recalibrate the standard solution yearly by liquid scintillation counting. Record all data in the QC Laboratory notebook.

7. Procedure

7.1. Working with bodily fluids is discussed in detail in SOP-4, "Handling Human Biological Fluids," found in Appendix III of the EM-9 Safety Manual.

NOTE: Wear safety glasses, gloves, and a lab coat. Each day prepare a 1:100 dilution of household bleach in water in a spray bottle. Use this solution to thoroughly clean the work area after sample preparation is completed. Remove gloves, discard in the biohazard waste container, and wash hands with soap and water.

7.2. Prepare a pool of blank urine sufficient in volume to allow 50 mL for each QC sample to be prepared.

7.3. Prepare QC samples to equal at least 10% of the total number of samples to be analyzed. Include blank QCs prepared from the same urine pool as the spiked samples. Tritium QC samples may be divided into two aliquots because only a 200-μL sample size is required by the analyst.

7.4. Record QC standard information, sample spike amount, concentration, uncertainty, and all calculations in the QC Laboratory notebook.

7.5. Label bottles with QC sample numbers.

7.6. Aliquot 50 mL of blank urine into each sample bottle.

7.7. Spike the blank urine with aliquots of standard as determined in Step 7.3.

7.8. Screw caps on bottles and refrigerate at a nominal temperature of 4°C pending analysis.

7.9. Enter the spike concentration of each QC into the CVS and CVD data bases on the VAX. This procedure is done annually because the same concentration levels are used throughout the year.

8. Calculations

8.1. Calculate spike concentrations for a 150-μL aliquot of ^{3}H standard and report concentration as μCi/L using the following equation.

$$\frac{(1.67\ \mu\text{Ci/mL})\ (\text{mL}/1000\ \mu\text{L})\ (150\ \mu\text{L})}{50\ \text{mL}\ (1\ \text{L}/1000\ \text{mL})} = 5.01\ \mu\text{Ci/L} \quad .$$

8.2. Spike concentrations calculated in Step 8.1 are tabulated below.

Spike amount (μL)	Concentration (pCi/sample)	Uncertainty (±3.7%)
0	0.00	0.00
100	3.34	0.12
150	5.01	0.17
200	6.68	0.25
250	8.35	0.31
300	10.02	0.37
400	13.36	0.49

9. Proper Waste Disposal Practices

9.1. Solid waste.

9.1.1. Radiochemically contaminated waste.

9.1.1.1. Radiochemically contaminated solid waste, such as paper wipes, glass or plastic pipettes, plastic cups, and incorrectly spiked QC samples, is accumulated in a covered metal can lined with a plastic bag and kept segregated from nonradioactive solid waste.

9.1.1.2. The can is labeled with a hazardous waste label and a label indicating its use for radiochemically contaminated waste.

9.1.1.3. The can is opened only for the time necessary to add waste.

9.1.1.4. When the plastic bag is full, it is sealed with tape, removed from the can, identified as radiochemically contaminated waste, and placed in a functioning chemical exhaust hood pending pickup by the Waste Management group.

9.1.1.5. A new plastic bag is put into the waste can for continued use.

9.1.2. Biohazardous waste.

9.1.2.1. Bottles used to collect blank urine for a quality control sample matrix are disposed of as uncontaminated laboratory trash after they have been rinsed with water in a laboratory sink.

9.1.2.2. Solid waste, such as paper wipes, plastic pipettes, and rubber gloves, contaminated with biohazardous material (primarily urine) is accumulated in a plastic bag labeled for the collection of biohazardous waste and is kept segregated from waste with no biohazard contamination.

9.1.2.3. Full bags of biohazardous waste are transferred to a cardboard box labeled with a biohazard label. The cardboard box is lined with a plastic bag bearing a biohazard label.

9.1.2.4. When the cardboard box is full, the liner bag and the box are sealed.

9.1.2.5. A new biohazard waste box lined with a plastic bag is prepared for further use.

9.2. Liquid waste.

9.2.1. Liquid waste contaminated with radionuclides is disposed of in a sink specifically approved for the disposal of aqueous radioactive waste and inorganic acids and bases.

9.3. Waste pickup.

9.3.1. Radioactively contaminated waste.

9.3.1.1. The surface exposure rate of the sealed bag of radiochemically contaminated solid waste is determined by a radiation protection technician and is recorded on the Radioactive Solid Waste Disposal (RSWD) Record form.

9.3.1.2. Pickup by the Waste Management group of a full bag of radiochemically contaminated solid waste is requested using the current Chemical Waste Disposal Request (CWDR) form. The current Waste Profile Request form (WPRF) that describes the waste is referenced on both disposal request forms.

9.3.1.3. The Waste Management group picks up the waste for disposal according to Laboratory policy.

9.3.2. Biohazardous waste.

9.3.2.1. Pickup of a full box of biohazardous waste is requested through the Waste Management Group using the current Chemical Waste Disposal Request (CWDR) form. The current Waste Profile Request form (WPRF) that describes the waste is referenced on the CWDR.

9.3.2.2. The Waste Management group arranges for pickup and disposal of the waste by the company currently under contract with the Laboratory for that purpose.

10. Source Materials

10.1. M. A. Gautier, E. S. Gladney, and D. R. Perrin, "Quality Assurance for Health and Environmental Chemistry: 1984," Los Alamos National Laboratory report LA-10508-MS (1985).

10.2. M. A. Gautier, E. S. Gladney, and B. T. O'Malley, "Quality Assurance for Health and Environmental Chemistry: 1985," Los Alamos National Laboratory report LA-10813-MS (1986).

10.3. M. A. Gautier, E. S. Gladney, W. D. Moss, M. B. Phillips, and B. T. O'Malley, "Quality Assurance for Health and Environmental Chemistry: 1986," Los Alamos National Laboratory report LA-11114-MS (1987).

10.4. M. A. Gautier, E. S. Gladney, M. B. Phillips, and B. T. O'Malley, "Quality Assurance for Health and Environmental Chemistry: 1987," Los Alamos National Laboratory report LA-11454-MS (1988).

10.5. M. A. Gautier, E. S. Gladney, M. B. Phillips, and B. T. O'Malley, "Quality Assurance for Health and Environmental Chemistry: 1988," Los Alamos National Laboratory report LA-11637-MS (1989).

10.6. M. A. Gautier, E. S. Gladney, N. L. Koski, M. B. Phillips, E. A. Jones, and B. T. O'Malley, "Quality Assurance for Health and Environmental Chemistry: 1989," Los Alamos National Laboratory report LA-11995-MS (1990).

10.7. M. P. Unterweger, B. M. Coursey, F. J. Schima, and W. B. Mann, "Preparation and Calibration of the 1978 National Bureau of Standards Tritiated-water Standards," *International Journal of Applied Radiation and Isotopes* **31**, 611-614 (1980).

10.8. National Institute of Standards and Technology, "Certificate of Analysis for Standard Reference Material 4927-B, Hydrogen-3" (National Institute of Standards and Technology, Washington, DC, January 1979).

10.9. M. Phillips, "Handling Human Biological Fluids," Health and Environmental Chemistry SOP-4, September 1988, Los Alamos National Laboratory document.

10.10. "Low-Level Radioactive Solid Waste," Administrative Requirement 10-2, in *Environment, Safety, and Health Manual*, Los Alamos National Laboratory Manual, Chapter 1 (most recent edition).

10.11. "Chemical, Hazardous, and Mixed Waste," Administrative Requirement 10-3, in *Environment, Safety, and Health Manual*, Los Alamos National Laboratory Manual, Chapter 1 (most recent edition).

10.12. "Managing Infectious Waste," Administrative Requirement 10-7, in *Environment, Safety, and Health Manual*, Los Alamos National Laboratory Manual, Chapter 1 (most recent edition).

Revisions or additions to the procedure are marked (▒▒▒▒). Where a section heading is marked, the entire section has been revised.

TRITIUM IN WATER — QC SAMPLE PREPARATION

Analyte: Tritium	**Method No.:** QCR270
Matrix: Water	**Spike Range:** 10-20 nCi/L
Procedure: Liquid scintillation counting	**Accuracy and Precision:** 100% ± 3.7% RSD
Effective Date: 03/29/89	**Authors:** Nancy L. Koski Margaret A. Gautier

SAFETY NOTE: Before beginning this procedure, read all of the Material Safety Data Sheets for the chemicals listed in Sec. 5. Read Sec. 4.3 of the EM-9 Safety Manual for information on personal protective clothing and equipment. Read Sec. 9 of this procedure and Source Materials 10.5 and 10.6 for proper waste disposal practices.

1. Principle of Method

1.1. A QC sample for the determination of tritium in water is prepared by diluting a tritium standard to 10 mL with distilled water.

1.2. QC samples are submitted for analysis with each analytical batch and are analyzed along with the unknown samples using the same analytical procedure.

2. Accuracy and Precision

2.1. The propagated error on QC preparation is based on the calibration error of the standard and on the error associated with use of the pipette and of the volumetric flask. A relative standard deviation (RSD) of 3.7% at the 1σ level has been calculated for the calibration, spiking, and dilution process based on the following function:

$$D = \frac{M1 \times M2}{M3} ,$$

where D = calculated result,
M1 = calibration error,
M2 = spiking error, and
M3 = dilution error.

2.1.1. Calculate relative variance using the following equation.

$$R_M^2 = \frac{\sigma^2}{\overline{X}^2} ,$$

where R^2_M = relative variance,
M = $M_1 \ldots M_n$ (variable),
σ^2 = variance (std dev^2), and
$\overline{X}$ = mean value of each variable (M).

2.1.2. Calculate percent relative standard deviation using the following equation.

$$SD_T = \sqrt{R_{M1}^2 + R_{M2}^2 + R_{M3}^2} \times 100 ,$$

where SD_T = relative standard deviation (% error),
R^2_{M1} = relative variance of standard,
R^2_{M2} = relative variance of pipette,
R^2_{M3} = relative variance of volumetric flask, and
100 = factor to convert to percentage.

2.2. Analysis by liquid scintillation counting of QC samples prepared during 1989 and 1990 using this procedure (N = 35) gave a mean recovery of 92% ± 7% RSD. The data are published in Source Materials 10.1 and 10.2.

3. Collection and Storage of Samples

3.1. QC samples are transferred to glass scintillation vials and are stored at room temperature pending analysis.

4. Apparatus

4.1. Volumetric flasks: 10-mL, Class A.

4.2. Auto-pipette: 100- and 1000-μL, Rainin or equivalent.

4.3. Pipette tips: disposable.

4.4. Graduated cylinder: 10-mL.

4.5. Scintillation vials: glass.

4.6. Parafilm.

4.7. Labels printed with QC sample numbers.

5. Reagents

5.1. None required.

6. Calibration and Standards

6.1. When a certified primary standard is available, dilute it to make a standard at the desired concentration.

6.2. Calibrate standard solutions that are not made from certified primary standards against an appropriate certified standard.

6.3. Prepare QC samples by diluting a tritium standard to 10 mL with distilled water. The standard should be at a concentration of approximately 300 pCi/mL.

6.4. Calibrate the ^3H standard against a National Institute of Standards and Technology (NIST)-certified ^3H Standard Reference Material, such as NIST SRM 4927B, a solution of tritiated water. Recalibrate the standard solution annually by liquid scintillation counting and decay the ^3H concentration midway through the calibration period.

6.5. Decay the ^3H standards each year.

6.5.1. The half-life of ^3H is 12.35 years.

6.5.2. The following equation describes the rate of physical decay of radionuclides:

$$A_t = A_o e^{-\lambda t} ,$$

where A_t = the activity at time t,
A_o = the activity at t = 0,
e = the base of natural logarithms, and
λ = $(\ln 2)/T_{1/2}$, the decay constant, where $T_{1/2}$ is the half-life.

7. Procedure

7.1. Prepare QC samples to equal at least 10% of the total number of samples to be analyzed. Periodically include 10 mL of distilled water as a blank.

7.2. Preparation of QC blanks.

7.2.1. Prepare and seal QC blank samples before any tritium solutions are opened to avoid contamination of the blanks by tritiated water vapor.

7.2.2. Using a graduated cylinder, measure 10 mL of distilled water into a glass scintillation vial.

7.2.3. Cap the vial and wrap the cap with Parafilm.

7.2.4. Label the vial with a QC sample number.

7.2.5. Record QC standard information, sample number, sample description, spike amount, concentration, uncertainty, and all calculations in the QC Laboratory notebook and in the CVS and CVD data bases on the VAX.

7.3. Preparation of QC spiked samples.

7.3.1. Pour approximately 3 mL of distilled water into a 10-mL volumetric flask.

7.3.2. Pipette an aliquot of the tritium standard solution into the flask to reach the desired spike range.

7.3.3. Dilute the standard to volume with distilled water. Mix by inverting.

7.3.4. Transfer the standard from the flask to a glass scintillation vial.

7.3.5. Cap the vial and wrap the cap with Parafilm.

7.3.6. Label the vial with a QC sample number.

7.3.7. Record QC standard information, sample number, sample description, spike amount, concentration, uncertainty, and all calculations in the QC Laboratory notebook and in the CVS and CVD data bases on the VAX.

8. Calculations

8.1. Record the concentration of ^{3}H in the water as pCi/L or nCi/L.

8.2. Calculate spike concentrations as in the following example.

8.2.1. If 400 μL of a 300 pCi/L tritium standard is used to spike a 10-mL QC sample, the concentration of tritium in the sample is 12 nCi/L. Multiply the result by the RSD calculated in Step 2.1 to obtain the uncertainty.

$$\frac{\left(300\ \frac{pCi}{mL}\right)\left(\frac{mL}{1000\ \mu L}\right)(400\ \mu L)\left(\frac{nCi}{1000\ pCi}\right)}{(10.0\ mL)\left(\frac{L}{1000\ mL}\right)} = 12\frac{nCi}{L}$$

9. Proper Waste Disposal Practices

9.1. Liquid waste.

9.1. Dispose of radioactively contaminated liquid waste in a sink specifically approved for the disposal of aqueous radioactive waste and inorganic acids and bases.

9.2. Solid waste.

9.2.1. Accumulate radioactively contaminated solid waste, such as paper wipes, glass or plastic pipettes, plastic cups, and incorrectly spiked QC samples, in a covered metal can lined with a plastic bag and keep it segregated from nonradioactive solid waste.

9.2.2. Label the can to indicate its use for radioactively contaminated waste.

9.2.3. Open the can only for the time necessary to add waste.

9.2.4. When the plastic bag is full, seal it with tape, remove it from the can, and identify it as radioactively contaminated waste.

9.2.5. Put a new plastic bag into the waste can for continued use.

9.2.6. Place the sealed bag into a cardboard box lined with a plastic bag and labelled to indicate its use for radioactively contaminated waste.

9.2.7. When the cardboard box is full, seal the plastic bag liner and the box.

9.2.8. Mark the box as radioactively contaminated compactable waste and reference the current Waste Profile Request form (WPRF) describing the waste in the box on the outside of the box.

9.2.9. Line a new box with a plastic bag and label it for continued use.

9.2.10. Complete the current Radioactive Solid Waste Record (RSWD) form describing the full, sealed box of waste. Reference the current WPRF number on the RSWD.

9.2.11. The outside of the full box is surveyed for radioactive contamination by a radiation protection technician. Record the results of the survey on the RSWD.

9.2.12. Submit the completed RSWD and a copy of the WPRF to the Waste Management group for approval.

9.3. Waste pickup.

9.3.1. After the RSWD describing the full box of solid waste has been approved by the Waste Management group, request pickup of the box by the contractor approved for the transportation of radioactively contaminated waste. A written job order may be required to request pickup of waste.

9.3.2. The RSWD and a copy of the associated WPRF accompany the full box.

9.3.3. The waste is disposed of according to Laboratory policy.

10. Source Materials

10.1. M. A. Gautier, E. S. Gladney, N. L. Koski, M. B. Phillips, E. A. Jones, and B. T. O'Malley, "Quality Assurance for Health and Environmental Chemistry: 1989," Los Alamos National Laboratory report LA-11996-MS (1990).

10.2. M. A. Gautier, E. S. Gladney, N.L. Koski, E. A. Jones, and B. T. O'Malley, "Quality Assurance for Health and Environmental Chemistry: 1990," Los Alamos National Laboratory report LA-12208-MS (1991).

10.3. National Institute of Standards and Technology, "Certificate of Analysis for Standard Reference Material 4927-B, Hydrogen-3" (National Institute of Standards and Technology, Washington, DC, January 1979).

10.4. M. P. Unterweger, B. M. Coursey, F. J. Schima, and W. B. Mann, "Preparation and Calibration of the 1978 National Bureau of Standards Tritiated-water Standards," *International Journal of Applied Radiation and Isotopes* **31**, 611-614 (1980).

10.5. "Low-Level Radioactive Solid Waste," Administrative Requirement 10-2, in *Environment, Safety, and Health Manual*, Los Alamos National Laboratory Manual, Chapter 1 (most recent edition).

10.6. "Hazardous and Mixed Waste," Administrative Requirement 10-3, in *Environment, Safety, and Health Manual*, Los Alamos National Laboratory Manual, Chapter 1 (most recent edition).

Revisions or additions to the procedure are marked (▒▒▒▒). Where a section heading is marked, the entire section has been revised.

URANIUM IN SOIL — QC SAMPLE PREPARATION

Analyte: Uranium	**Method No.:** QCR280
Matrix: Soil	**Spike Range:** 10-500 μg/g
Procedure: Delayed neutron activation	**Accuracy and Precision:** 100% ± 3.3% RSD
Effective Date: 08/09/89	**Authors:** Nancy L. Koski Margaret A. Gautier

SAFETY NOTE: Before beginning this procedure, read all of the Material Safety Data Sheets for the standards listed in Sec. 6. Read Sec. 4.3 of the EM-9 Safety Manual for information on personal protective clothing and equipment. Read Sec. 9 of this procedure and Source Materials 10.5 and 10.6 for proper waste disposal practices.

1. Principle of Method

1.1. Two soils with certified uranium contents are combined in varying proportions to make QC samples with uranium concentrations in the desired spike range.

1.2. No soils tested had a sufficiently low and consistent uranium background to allow use as a blank sample or as a soil sample matrix.

1.3. QC samples are submitted for analysis with each analytical batch and are analyzed along with the unknown samples using the same analytical procedure.

2. Accuracy and Precision

2.1. The propagated error on QC preparation is based on the calibration error of the standards and on the error associated with use of the analytical balance. A relative standard deviation (RSD) of 3.3% at the 1σ level has been calculated for the calibration and spiking process based on the following function:

$$D = \frac{M1\ M3 + M2\ M4}{M3 + M4},$$

where D = calculated result,
M1 = calibration error of standard one,
M2 = calibration error of standard two,
M3 = weighing error of standard one, and
M4 = weighing error of standard two.

2.2. Calculate relative variance using the following equation.

$$R_M^2 = \frac{\sigma^2}{\overline{X}^2} ,$$

where R^2_M = relative variance,
M = $M_1 \ldots M_n$ (variable),
σ^2 = variance (std dev^2), and
$\overline{X}$ = mean value of each variable (M).

2.3. Calculate percent relative standard deviation using the following equation.

$$S_{D_T} = \sqrt{A + B} \times 100 ,$$

where

$$A = \frac{(R^2_{M3} + R^2_{M4})\,(M_2 - M_1)^2\, M_3^2\, M_4^2}{(M_3 + M_4)^2\,(M_2\, M_4 + M_1\, M_3)^2} ,$$

$$B = \frac{R^2_{M2}\, M_2^2\, M_4^2 + R^2_{M1}\, M_1^2\, M_3^2}{(M_2\, M_4 + M_1\, M_3)^2} ,$$

SD_T = relative standard deviation (% error),
R^2_{M3} = relative variance of standard weight one,
R^2_{M4} = relative variance of standard weight two,
M_2 = calibration error of standard two,
M_1 = calibration error of standard one,
M_3 = weighing error of standard one,
M_4 = weighing error of standard two,
R^2_{M2} = relative variance of standard two,
R^2_{M1} = relative variance of standard one, and
100 = factor to convert to percentage.

2.4. Analysis by delayed neutron activation of QC samples prepared during 1989 and 1990 using this procedure gave a mean recovery of 94% ± 2% RSD. The data are published in Source Materials 10.1 and 10.2 and are summarized below.

URANIUM SPIKE RECOVERY DURING 1989 AND 1990 AS A FUNCTION OF CONCENTRATION		
Spike range, μg/g	Mean ± RSD (%)	Number of samples
10 to 50	95 ± 4	4
50 to 100	95 ± 1	4
150 to 200	94 ± 1	3
200 to 250	94 ± 1	5

3. Collection and Storage of Samples

3.1. QC samples are stored in polyethylene reactor rabbits at room temperature pending analysis.

4. Apparatus

4.1. Reactor rabbits: polyethylene, to contain soil samples during irradiation in the reactor.

4.2. Commercial canned dust-chaser spray.

4.3. Spatulas.

4.4. Analytical balance: 100-g capacity, 0.1-mg accuracy.

4.5. Labels printed with QC sample numbers.

5. Reagents

5.1. None required.

6. Calibration and Standards

6.1. The total weight of soil in each reactor rabbit is 1.0000 g.

6.2. Select two soils with consensus or certified uranium concentrations, one near the lower limit and the other near the upper limit of the desired concentration range. Two such soils are Canadian Certified Reference Materials Project (CCRMP) SO-3, Calcareous C Uranium Soil, with a certified uranium concentration of 1.11 ± 0.02 μg/g, and CCRMP SY-2, Syenite, with a certified uranium concentration of 284 ± 9 μg/g.

6.3. One certified soil may be used alone or combined with a second certified soil to make a QC sample with a uranium concentration in the desired spike range.

7. Procedure

7.1. Prepare QC samples to equal at least 10% of the total number of samples to be analyzed. Periodically include an unspiked sample as a blank.

7.2. Place a polyethylene rabbit on the balance. Tare the balance.

7.3. To prepare a QC sample with the same uranium concentration as the certified soil, accurately weigh 1.0000 g of the certified soil into the reactor rabbit. Clean the rabbit threads before recording the soil weight.

NOTE: The threads on the polyethylene reactor rabbit must be free of any soil residue before closing to prevent the rabbit from opening during irradiation. Use a commercial canned dust-chaser spray to blow the rabbit threads free of any soil before determining the final weight of soil added and capping the rabbit.

7.4. To prepare a QC sample with a uranium concentration different from the concentration in either of the two certified soils, determine a suitable ratio in which to mix the two certified soils to obtain a uranium concentration in the desired spike range and a total sample weight of 1.0000 g.

NOTE: When mixing two soils, weigh out at least 30 mg (0.03 g) of each soil to remain within the calculated RSD in Step 2.1.

7.4.1. Weigh an aliquot of the first soil into the reactor rabbit. Clean the rabbit threads. Record the soil weight and tare the balance.

7.4.2. Weigh an aliquot of the second soil into the reactor rabbit. Clean the rabbit threads before recording the soil weight.

7.5. Cap the reactor rabbit, making certain no residual soil remains on the threads.

7.7. Mix the two soils in the QC sample by shaking the rabbit.

7.8. Do not place a sample label on the rabbit because it will interfere with the free movement of the rabbit in and out of the reactor. Use a pen to write a QC number on the reactor rabbit. Destroy the associated printed sample label. Record the total sample weight on the rabbit for reference by the analyst.

7.9. Record QC standard information, sample number, sample description, certified soil weights, uranium concentrations, uncertainty, and all calculations in the QC Laboratory notebook and enter into the CVS and CVD data bases on the VAX.

8. Calculations

8.1. Record the final concentration of uranium in the soil as $\mu g/g$.

8.2. Calculate final uranium concentration as in the following example.

8.2.1. If 0.7951 g of CCRMP SO-3, Calcareous C Uranium Soil, with a uranium concentration of 1.11 ± 0.02 $\mu g/g$, and 0.2646 g of CCRMP SY-2, Syenite, with a uranium concentration of 284 ± 9 $\mu g/g$, are combined in a reactor rabbit, the QC sample will have a final weight of 1.0597 g and a uranium concentration of 72 $\mu g/g$. Multiply the result by the RSD calculated in Step 2.1 to obtain the uncertainty.

$$\frac{(0.7951\ g)\ (1.11\ \mu g/g)\ +\ (0.2646\ g)\ (284\ \mu g/g)}{0.7951\ g\ +\ 0.2646\ g} = 72\ \mu g/g\ .$$

9. Proper Waste Disposal Practices

9.1. Solid waste.

9.1.1. Accumulate radioactively contaminated solid waste, such as paper wipes, glass or plastic pipettes, plastic cups, and incorrectly spiked QC samples, in a covered metal can lined with a plastic bag and keep it segregated from nonradioactive solid waste.

9.1.2. Label the can to indicate its use for radioactively contaminated waste.

9.1.3. Open the can only for the time necessary to add waste.

9.1.4. When the plastic bag is full, seal it with tape, remove it from the can, and identify it as radioactively contaminated waste.

9.1.5. Put a new plastic bag into the waste can for continued use.

9.1.6. Place the sealed bag into a cardboard box lined with a plastic bag and keep the box inside a metal compactable waste container. Reference to the current Waste Profile Request form (WPRF) describing the waste accompanies the sealed bag.

9.1.7. Label the metal container to indicate its use for radioactively contaminated waste.

9.1.8. When the cardboard box is full, seal the plastic bag liner and the box. Check the outside of the box for radioactive contamination and record the information in the Radioactive Waste Disposal logbook.

9.1.9. The radioactive solid waste coordinator marks the cardboard box as radioactively contaminated compactable waste and references the current WPRF numbers describing the waste in the box on the outside of the box and in the Radioactive Waste Disposal logbook.

9.1.10. Place a new lined cardboard box into the metal container for continued use.

9.1.11. Place the sealed box in a dumpster for compactable mixed waste.

9.2. Liquid waste.

9.2.1. Dispose of radioactively contaminated liquid waste in a sink specifically approved for the disposal of aqueous radioactive waste and inorganic acids and bases.

9.3. Waste pickup.

9.3.1. When the dumpster containing solid waste is full, the surface exposure rate of the dumpster is determined by a radiation protection technician and is recorded on the Radioactive Solid Waste Disposal (RSWD) Record form.

9.3.2. Reference all the WPRF numbers associated with the waste in the dumpster on the RSWD.

9.3.3. Request pickup by the Waste Management group of a full dumpster. The RSWD and all the associated WPRFs accompany the dumpster.

9.3.4. The Waste Management group disposes of the waste according to Laboratory policy.

10. Source Materials

10.1. M. A. Gautier, E. S. Gladney, N. L. Koski, M. B. Phillips, E. A. Jones, and B. T. O'Malley, "Quality Assurance for Health and Environmental Chemistry: 7721989," Los Alamos National Laboratory LA-11995-MS (1990).

10.2. M. A. Gautier, E. S. Gladney, N. L. Koski, E. A. Jones, and B. T. O'Malley, "Quality Assurance for Health and Environmental Chemistry: 1990," Los Alamos National Laboratory LA-12208-MS (1991).

10.3. Canada Centre for Mineral and Energy Technology, "Certificate of Analysis for Reference Soil Sample SO-3" (Canada Centre for Mineral and Energy Technology, Ottowa, Ontario, Canada, 1985).

10.4. Canada Centre for Mineral and Energy Technology, "Certificate of Analysis for Reference Soil Sample SY-2" (Canada Centre for Mineral and Energy Technology, Ottowa, Ontario, Canada, December 1979).

10.5. "Low-Level Radioactive Solid Waste," Administrative Requirement 10-2, in *Environment, Safety and Health Manual*, Los Alamos National Laboratory Manual, Chapter 1 (most recent edition).

10.6. "Chemical, Hazardous, and Mixed Waste," Administrative Requirement 10-3, in *Environment, Safety, and Health Manual*, Los Alamos National Laboratory Manual, Chapter 1 (most recent edition).

Revisions or additions to the procedure are marked (). Where a section heading is marked, the entire section has been revised.

URANIUM-235 IN URINE — QC SAMPLE PREPARATION

Analyte: Uranium-235	**Method No.:** QCR290
Matrix: Urine	**Spike Range:** 0.0 to 28.4 pCi/L
Procedure: Delayed neutron activation	**Accuracy and Precision:** 100% ± 3.5% RSD
Effective Date: 01/01/75 to 08/01/91	**Authors:** Margaret A. Gautier William D. Moss Nancy L. Koski

SAFETY NOTE: Before beginning this procedure, read all of the Material Safety Data Sheets for the chemicals listed in Sec. 5. Read Sec. 4.3 of the EM-9 Safety Manual for information on personal protective clothing and equipment.

1. Principle of Method

1.1. A pool of blank urine is prepared.

1.2. The blank urine is aliquoted and spiked with a known standard.

1.3. QC samples are submitted for analysis with each analytical batch and are analyzed along with the unknown samples using the same analytical procedure.

2. Accuracy and Precision

2.1. The propagated error on QC preparation is based on the calibration error from six sample plate preparations of the standard and on the error associated with use of the graduated cylinder and of the pipette. A relative standard deviation (RSD) of 3.5% has been calculated for the calibration, spiking, and aliquoting process based on the following function:

$$U = \frac{M1 \times M2}{M3 + M2} ,$$

where U = uncertainty,
M1 = calibration error,
M2 = spiking error, and
M3 = aliquoting error.

2.1.1. Calculate relative variance using the following equation.

$$R_M^2 = \frac{\sigma^2}{\overline{X}^2} ,$$

where R^2_M = relative variance,
M = $M_1 \ldots M_n$ (variable),
σ^2 = variance (std dev^2), and
$\overline{X}$ = mean value of each variable (M).

2.1.2. Calculate percent relative standard deviation using the following equation.

$$SD_T = \sqrt{\frac{\left[R^2_{M1}\,(M_3 + M_2)^2 + M_3^2\,(R^2_{M2} + R^2_{M3})\right]}{(M_3 + M_2)^2}} \times 100 ,$$

where SD_T = relative standard deviation (% error),
R^2_{M1} = relative variance of standard,
M_3 = volume of cylinder,
M_2 = volume of pipette,
R^2_{M2} = relative variance of pipette,
R^2_{M3} = relative variance of cylinder, and
100 = factor to convert to percentage.

2.2. Analysis by delayed neutron activation of QC samples prepared between 1984 and 1989 using this procedure gave a mean recovery of 100% ± 10% RSD. The data are published in **Source Material** 9.1 through 9.6 and are summarized below.

URANIUM-235 SPIKE RECOVERY AS A FUNCTION OF CONCENTRATION

	Spike Level pCi/L	Mean ± RSD (%)	Number of Samples
1984	6.8	97 ± 16	19
	10.2	100 ± 8	5
	13.6	101 ± 11	19
	17.0	98 ± 5	7
	25.5	93 ± 13	13
	34.0	96 ± 7	7

URANIUM-235 SPIKE RECOVERY AS A FUNCTION OF CONCENTRATION (cont)			
	Spike Level pCi/L	Mean ± RSD (%)	Number of Samples
1985	6.8	98 ± 10	14
	10.2	100 ± 7	10
	17.0	103 ± 3	3
	20.4	103 ± 4	9
	25.5	106 ± 9	5
1986	7.74	101 ± 12	9
	10.32	97 ± 7	14
	12.90	103 ± 9	9
	15.48	97 ± 6	9
	20.64	103 ± 7	11
	25.8	99 ± 7	12
1987	4.58	108 ± 9	13
	9.16	109 ± 7	11
	13.74	116 ± 8	11
	18.32	112 ± 7	9
	22.90	109 ± 11	13
1988	5.14	84 ± 8	7
	7.71	87 ± 10	10
	10.28	90 ± 10	12
	20.56	93 ± 10	14
	25.70	89 ± 4	11
1989	5.14	95 ± 14	15
	10.28	94 ± 15	6
	15.42	98 ± 14	18
	20.56	95 ± 9	13
	25.70	99 ± 20	11

3. Collection and Storage of Samples

3.1. Urine is collected as needed from group personnel who have no known contact with radiation work and is used to form a pool of blank urine.

3.2. Spiked QC samples are refrigerated at a nominal temperature of 4°C pending analysis.

4. Apparatus

4.1. Beakers: 4- or 5-L, polyethylene.

4.2. Graduated cylinders: 50-mL.

4.3. Auto-pipette: 100- and 1000-μL, Rainin or equivalent.

4.4. Pipette tips: disposable.

4.5. Specimen containers: 120-mL with screw caps, sterile inner surface, catalog no. C8845-3, Baxter Health Care Corp., Tempe, AZ 85282, or equivalent.

4.6. Labels printed with QC sample numbers.

4.7. Heat lamp.

4.8. Filter paper: 2.9-cm, Whatman No. 41 or equivalent.

4.9. Discs: stainless steel, 2.22-cm-diam.

4.10. Alpha phosphor on Mylar: The phosphor is the standard silver-activated zinc sulfide. William B. Johnson & Associates, Inc., Research Park, Montville, NJ 07045.

4.11. Rings and discs: plastic rings and discs, nominal 1-in.-diam, molded of nylon. Control Molding Corp., 84 Granite Ave., Staten Island, NY 10303.

4.12. Mylar film: 1.5-in.-wide rolls, 0.0005-in.-thick. Manufactured by E. I. duPont de Nemours, retailed by Brownell, Inc., 85 Tenth Ave., New York, NY 10001.

5. Reagents

5.1. None required.

6. Calibration and Standards

6.1. QC samples are spiked with an enriched uranium standard prepared in 2 N HNO_3. The standard should be at a concentration of approximately 2 pCi/mL. The solution is counted on a zinc sulfide scintillation system calibrated with National Institute of Standards and Technology (NIST) Standard Reference Material (SRM) 4904L-F, an ^{241}Am alpha-particle standard, using count room procedure CR340.

6.2. The enriched uranium stock standard (93.276% ^{235}U by weight) was prepared from a certified NIST standard, such as NIST SRM U-930. SRM U-930 is composed of the following additional isotopes by weight percent: ^{234}U, 1.0759; ^{236}U, 0.2034; and ^{238}U, 5.445. The ^{235}U to ^{238}U ratio for this standard is 17.349.

6.3. Recalibrate the ^{235}U standard solution yearly by direct plating and alpha scintillation counting.

6.4. Direct plating procedure.

6.4.1. Pipette a 500-μL aliquot of the standard to be calibrated on each of six 2.22-cm stainless steel discs, and evaporate to dryness under a heat lamp.

6.4.2. Place a 2.9-cm filter paper on a molded nylon disc. The filter paper assures a tightly sealed package when assembled.

6.4.3. Place the stainless steel disc containing the sample on the filter paper. Be sure they are centered.

6.4.4. Place a .875-in. phosphor paper over the stainless steel disc (dull side against the disc).

6.4.5. Place a piece of Mylar film over all the layers.

6.4.6. Press a nylon ring down over the layers and around the nylon disc to form a tightly sealed package. Cut off the excess Mylar with scissors. Label the back of the assembly with an identification number.

6.4.7. Submit the samples to the count room for alpha scintillation counting and request a 60,000-s (overnight) per sample count.

6.4.8. The count room data are corrected for background and reported in disintegrations per minute (dpm). Divide the dpm results by 2.22 to convert to pCi. Calculate the mean and standard deviation of the six plates and assign the value to the standard.

7. Procedure

7.1. Working with bodily fluids is discussed in detail in SOP-4, "Handling Human Biological Fluids," found in Appendix III of the EM-9 Safety Manual.

NOTE: Wear safety glasses, gloves, and a lab coat. Each day prepare a 1:100 dilution of household bleach in water in a spray bottle. Use this solution to thoroughly clean the work area after sample preparation is completed. Remove gloves, discard in the biohazard waste container, and wash hands with soap and water.

7.2. Prepare a pool from blank urine sufficient in volume to allow 50 mL for each QC sample to be prepared.

7.3. Prepare QC samples to equal at least 10% of the total number of samples to be analyzed. Include blank QCs prepared from the same urine pool as the spiked samples.

7.4. Record QC standard information, sample spike amount, concentration, and uncertainty in the QC Laboratory notebook.

7.5. Label bottles with QC sample numbers.

7.6. Aliquot 50 mL of blank urine into each sample bottle.

7.7. Spike the blank urine with aliquots of standard as determined in Step 7.3.

7.8. Screw caps on bottles and refrigerate at a nominal temperature of 4°C pending analysis.

7.9. Enter the spike concentrations of each QC into the CVS and CVD data bases on the VAX. This procedure is done annually because the same concentration levels are used throughout the year.

8. Calculations

8.1. Record spike concentrations as pCi/L of urine. Calculate the spike concentration for a 150-μL aliquot of a 2.58-pCi/mL ^{235}U standard using the following equation.

$$\frac{(2.58\ \text{pCi/mL})\ (\text{mL}/1000\ \mu\text{L})\ (150\ \mu\text{L})}{50\ \text{mL}\ (\text{L}/1000\ \text{mL})} = 7.74\ \text{pCi/L} \quad .$$

8.2. Spike concentrations calculated in Step 8.1 are tabulated below.

Spike Amount (μL)	Concentration (pCi/L)	Uncertainty (±3.5%)
100	5.16	0.17
150	7.74	0.25
200	10.32	0.33
300	15.48	0.50
400	20.64	0.66

9. Source Materials

9.1. M. A. Gautier, E. S. Gladney, and D. R. Perrin, "Quality Assurance for Health and Environmental Chemistry: 1984," Los Alamos National Laboratory report LA-10508-MS (1985).

9.2. M. A. Gautier, E. S. Gladney, and B. T. O'Malley, "Quality Assurance for Health and Environmental Chemistry: 1985," Los Alamos National Laboratory report LA-10813-MS (1986).

9.3. M. A. Gautier, E. S. Gladney, W. D. Moss, M. B. Phillips, and B. T. O'Malley, "Quality Assurance for Health and Environmental Chemistry: 1986," Los Alamos National Laboratory report LA-11114-MS (1987).

9.4. M. A. Gautier, E. S. Gladney, M. B. Phillips, and B. T. O'Malley, "Quality Assurance for Health and Environmental Chemistry: 1987," Los Alamos National Laboratory report LA-11454-MS (1988).

9.5. M. A. Gautier, E. S. Gladney, M. B. Phillips, and B. T. O'Malley, "Quality Assurance for Health and Environmental Chemistry: 1988," Los Alamos National Laboratory report LA-11637-MS (1989).

9.6. M. A. Gautier, E. S. Gladney, N. L. Koski, M. B. Phillips, E. A. Jones, and B. T. O'Malley, "Quality Assurance for Health and Environmental Chemistry: 1989," Los Alamos National Laboratory report LA-11995-MS (1990).

9.7. *EML Procedures Manual*, 25th ed., H. L. Volchok and G. de Planque, Eds. (Environmental Measurements Laboratory, New York, August 1982).

9.8. National Institute of Standards and Technology, "Certificate of Analysis for Standard Reference Material U-930, Uranium Isotopic Standard" (National Institute of Standards and Technology, Washington, DC, February 1966).

9.9. National Institute of Standards and Technology, "Certificate of Analysis for Standard Reference Material 4904L-F, Alpha-Particle Standard" (National Institute of Standards and Technology, Washington, DC, April 1982).

9.10. M. Phillips, "Handling Human Biological Fluids," Health and Environmental Chemistry SOP-4, September 1988, Los Alamos National Laboratory document.

URANIUM-238 IN URINE — QC SAMPLE PREPARATION

Analyte: Uranium-238	**Method No.:** QCR300
Matrix: Urine	**Spike Range:** 0.0 to 34.0 μg/L
Procedure: Delayed neutron activation	**Accuracy and Precision:** 100% ± 2.8% RSD
Effective Date: 01/01/75 to 08/01/91	**Authors:** Margaret A. Gautier William D. Moss Nancy L. Koski

SAFETY NOTE: Before beginning this procedure, read all of the Material Safety Data Sheets for the chemicals listed in Sec. 5. Read Sec. 4.3 of the EM-9 Safety Manual for information on personal protective clothing and equipment.

1. Principle of Method

1.1. A pool of blank urine is prepared.

1.2. The blank urine is aliquoted and spiked with a known standard.

1.3. QC samples are submitted for analysis with each analytical batch and are analyzed along with the unknown samples using the same analytical procedure.

2. Accuracy and Precision

2.1. The propagated error on QC preparation is based on the calibration error from six sample plate preparations of the standard and on the error associated with use of the graduated cylinder and of the pipette. A relative standard deviation (RSD) of 2.8% has been calculated for the calibration, spiking, and aliquoting process based on the following function:

$$U = \frac{M1 \times M2}{M3 + M2} ,$$

where U = uncertainty,
M1 = calibration error,
M2 = spiking error, and
M3 = aliquoting error.

2.1.1. Calculate relative variance using the following equation.

$$R_M^2 = \frac{\sigma^2}{\overline{X}^2} ,$$

where R^2_M = relative variance,
M = $M_1 \ldots M_n$ (variable),
σ^2 = variance (std dev^2), and
$\overline{X}$ = mean value of each variable (M).

2.1.2. Calculate percent relative standard deviation using the following equation.

$$SD_T = \sqrt{\frac{\left[R_{M1}^2 (M_3 + M_2)^2 + M_3^2 (R_{M2}^2 + R_{M3}^2)\right]}{(M_3 + M_2)^2}} \times 100 ,$$

where SD_T = relative standard deviation (% error),
R^2_{M1} = relative variance of standard,
M_3 = volume of cylinder,
M_2 = volume of pipette,
R^2_{M2} = relative variance of pipette,
R^2_{M3} = relative variance of cylinder, and
100 = factor to convert to percentage.

2.2. Analysis by delayed neutron activation of QC samples prepared between 1984 and 1989 using this procedure gave a mean recovery of 98% ± 16 % RSD. The large standard deviation associated with the ^{238}U analysis in urine is related to the measurement of depleted uranium and its corresponding low production of delayed neutron counts. The ^{238}U standard used for the bioassay program is only 0.18% ^{235}U. The data are published in **Source Material** 9.1 through 9.6 and are summarized below.

URANIUM-238 SPIKE RECOVERY AS A FUNCTION OF CONCENTRATION

	Spike Level (μg/L)	Mean ± RSD (%)	Number of Samples
1984	8.48	101 ± 30	16
	12.72	102 ± 23	14
	16.96	103 ± 26	15
	25.44	99 ± 30	7
	33.92	100 ± 5	15
	42.40	97 ± 5	5
	50.88	93 ± 6	6
1985	8.48	94 ± 35	14
	12.72	103 ± 21	9
	16.96	91 ± 17	13
	21.2	97 ± 7	7
	25.44	92 ± 16	14
	33.92	98 ± 7	12
1986	8.48	85 ± 19	8
	12.72	101 ± 24	11
	16.96	92 ± 14	12
	21.20	103 ± 12	11
	25.44	94 ± 14	15
	33.92	99 ± 10	14
1987	8.48	114 ± 20	12
	12.72	92 ± 21	9
	16.96	100 ± 17	14
	21.20	103 ± 21	12
	25.44	108 ± 19	14
	33.92	99 ± 12	14
1988	8.48	99 ± 27	13
	12.72	115 ± 19	8
	16.96	93 ± 16	10
	21.20	105 ± 10	8
	25.44	98 ± 11	13
	33.92	99 ± 15	11
1989	8.48	95 ± 16	13
	12.72	98 ± 18	11
	16.96	97 ± 10	8
	21.20	90 ± 18	12
	25.44	96 ± 6	10
	33.92	92 ± 8	18

3. Collection and Storage of Samples

3.1. Urine is collected as needed from group personnel who have no known contact with radiation work and is used to form a pool of blank urine.

3.2. Spiked QC samples are refrigerated at a nominal temperature of 4°C pending analysis.

4. Apparatus

4.1. Beakers: 4- or 5-L, polyethylene.

4.2. Graduated cylinders: 50-mL.

4.3. Auto-pipette: 100- and 1000-μL, Rainin or equivalent.

4.4. Pipette tips: disposable.

4.5. Specimen containers: 120-mL with screw caps, sterile inner surface, catalog no. C8845-3, Baxter Health Care Corp., Tempe, AZ 85282, or equivalent.

4.6. Labels printed with QC sample numbers.

4.7. Heat lamp.

4.8. Filter paper: 2.9-cm, Whatman No. 41 or equivalent.

4.9. Discs: stainless steel, 2.22-cm-diam.

4.10. Alpha phosphor on Mylar: The phosphor is the standard silver-activated zinc sulfide. William B. Johnson & Associates, Inc., Research Park, Montville, NJ 07045.

4.11. Rings and discs: plastic rings and discs, nominal 1-in.-diam, molded of nylon. Control Molding Corp., 84 Granite Ave., Staten Island, NY 10303.

4.12. Mylar film: 1.5-in.-wide rolls, 0.0005-in.-thick. Manufactured by E. I. duPont de Nemours, retailed by Brownell, Inc., 85 Tenth Ave., New York, NY 10001.

5. Reagents

5.1. None required.

6. Calibration and Standards

6.1. QC samples are spiked with a natural uranium standard prepared in 2 N HNO_3. The standard should be at a concentration of approximately 1 μg/mL. The solution is counted on a zinc sulfide scintillation system calibrated with National Institute of Standards and Technology (NIST) Standard Reference Material (SRM) 4904L-F, an ^{241}Am alpha-particle standard, using count room procedure CR340.

6.2. The natural uranium stock standard is prepared from a certified NIST standard, such as NIST SRM 950a, U_3O_8, and contains 0.72% ^{235}U. Record all data in the QC Laboratory notebook.

6.2.1. Ignite approximately 1 g of U_3O_8 for 1 h at 900°C.

6.2.2. Quantitatively transfer 0.5896 g of the U_3O_8 to a 50-mL beaker with 20 mL of 1:1 solution of HNO_3.

6.2.3. Dissolve the U_3O_8 in the acid and evaporate to near dryness.

6.2.4. Dissolve the residue (nitrate) in 10 mL of a 1% HNO_3 solution and transfer quantitatively to a 500-mL volumetric flask. Bring to volume with 1% HNO_3 and thoroughly shake. This solution contains 1000 mg of U/L.

6.3. Intermediate uranium standard.

6.3.1. Dilute 1 mL of the stock solution to 1000 mL with 1% HNO_3.

6.3.2. The solution contains 1 mg U/L (1 μg U/mL).

6.4. Recalibrate the ^{238}U standard solution yearly by direct plating and alpha scintillation counting. Natural uranium (0.715 weight percent ^{235}U) has an alpha activity of 1.5 disintegrations per minute (dpm) per μg. Record all data in the QC Laboratory notebook.

6.5. Direct plating procedure.

6.5.1. Pipette a 500-μL aliquot of the standard to be calibrated on each of six 2.22-cm stainless steel discs, and evaporate to dryness under a heat lamp.

6.5.2. Place a 2.9-cm filter paper on a molded nylon disc. The filter paper assures a tightly sealed package when assembled.

6.5.3. Place the stainless steel disc containing the sample on the filter paper. Be sure they are centered.

6.5.4. Place a .875-in. phosphor paper over the stainless steel disc (dull side against the disc).

6.5.5. Place a piece of Mylar film over all the layers.

6.5.6. Press a nylon ring down over the layers and around the nylon disc to form a tightly sealed package. Cut off the excess Mylar with scissors. Label the back of the assembly with an identification number.

6.5.7. Submit the samples to the count room for alpha scintillation counting and request a 60,000-s (overnight) per sample count.

6.5.8. The count room data is corrected for background and reported in dpm. Divide the dpm results by 2.22 to convert to pCi. Calculate the mean and standard deviation of the six plates and assign the value to the standard.

7. Procedure

7.1. Working with bodily fluids is discussed in detail in SOP-4, "Handling Human Biological Fluids," found in Appendix III of the EM-9 Safety Manual.

NOTE: Wear safety glasses, gloves, and a lab coat. Each day prepare a 1:100 dilution of household bleach in water in a spray bottle. Use this solution to thoroughly clean the work area after sample preparation is completed. Remove gloves, discard in the biohazard waste container, and wash hands with soap and water.

7.2. Prepare a pool from blank urine sufficient in volume to allow 50 mL for each QC sample to be prepared.

7.3. Prepare QC samples to equal at least 10% of the total number of samples to be analyzed. Include blank QCs prepared from the same urine pool as the spiked samples.

7.4. Record QC standard information, sample spike amount, concentration, and uncertainty in the QC Laboratory notebook.

7.5. Label bottles with QC sample numbers.

7.6. Aliquot 50 mL of blank urine into each sample bottle.

7.7. Spike the blank urine with aliquots of standard as determined in Step 7.3.

7.8. Screw caps on bottles and refrigerate at a nominal temperature of 4°C pending analysis.

7.9. Enter the spike concentrations of each QC into the CVS and CVD data bases on the VAX. This procedure is done annually because the same concentration levels are used throughout the year.

8. Calculations

8.1. On 2 July 1982, HSE-1 (now HS-1) notified HSE-9 (now EM-9) that uranium with a 0.17% enrichment of ^{235}U was being used in the shops. Our standard value was recalculated to that same isotopic ratio using a 4.24 conversion factor in the following equation. *This conversion factor can be used only for delayed neutron activation.*

$$4.24 = \frac{0.72\%}{0.17\%} ,$$

where 4.24 = conversion factor,
0.72 = enrichment of NIST natural uranium, and
0.17 = enrichment of uranium used in Los Alamos shops.

8.2. Record spike concentrations as μg/L of urine. Calculate the spike concentration for a 200-μL aliquot of a 1-mg/L uranium standard using the following equation.

$$\frac{(1\ \mu g/mL)\ (mL/1000\ \mu L)\ (200\ \mu L)}{50\ mL\ (L/1000\ mL)} = 4\ \mu g/L \times 4.24 = 16.96\ \mu g/L \quad .$$

8.3. Spike concentrations calculated in Step 8.2 are tabulated below.

Spike Amount (μL)	Concentration (μg/L)	Uncertainty (±2.8%)
0	0.00	0.00
100	8.48	0.24
150	12.72	0.36
200	16.96	0.47
250	21.20	0.59
300	25.44	0.71
400	33.92	0.95

9. Source Materials

9.1. M. A. Gautier, E. S. Gladney, and D. R. Perrin, "Quality Assurance for Health and Environmental Chemistry: 1984," Los Alamos National Laboratory report LA-10508-MS (1985).

9.2. M. A. Gautier, E. S. Gladney, and B. T. O'Malley, "Quality Assurance for Health and Environmental Chemistry: 1985," Los Alamos National Laboratory report LA-10813-MS (1986).

9.3. M. A. Gautier, E. S. Gladney, W. D. Moss, M. B. Phillips, and B. T. O'Malley, "Quality Assurance for Health and Environmental Chemistry: 1986," Los Alamos National Laboratory report LA-11114-MS (1987).

9.4. M. A. Gautier, E. S. Gladney, M. B. Phillips, and B. T. O'Malley, "Quality Assurance for Health and Environmental Chemistry: 1987," Los Alamos National Laboratory report LA-11454-MS (1988).

9.5. M. A. Gautier, E. S. Gladney, M. B. Phillips, and B. T. O'Malley, "Quality Assurance for Health and Environmental Chemistry: 1988," Los Alamos National Laboratory report LA-11637-MS (1989).

9.6. M. A. Gautier, E. S. Gladney, N. L. Koski, M. B. Phillips, E. A. Jones, and B. T. O'Malley, "Quality Assurance for Health and Environmental Chemistry: 1989," Los Alamos National Laboratory report LA-11995-MS (1990).

9.7. National Institute of Standards and Technology, "Certificate of Analysis for Standard Reference Material 950a, Uranium Oxide" (National Institute of Standards and Technology, Washington, DC, October 1969).

9.8. National Institute of Standards and Technology, "Certificate of Analysis for Standard Reference Material 4904L-F, Alpha-Particle Standard" (National Institute of Standards and Technology, Washington, DC, April 1982).

9.9. M. Phillips, "Handling Human Biological Fluids," Health and Environmental Chemistry SOP-4, September 1988, Los Alamos National Laboratory document.

PREPARATION OF A VEGETATION ASH MATRIX

Analyte: None	**Method No.:** QCM200
Procedure: Ashing of vegetation	
Effective Date: 11/29/90	**Authors:** Bennie A. Martinez Nancy K. Koski Margaret A. Gautier

SAFETY NOTE: Before beginning this procedure, read all of the Material Safety Data Sheets for the chemicals listed in Sec. 3. Read Sec. 4.3 of the EM-9 Safety Manual for information on personal protective clothing and equipment. Read Sec. 5 of this procedure for proper waste disposal practices.

1. Principle of Method

1.1. Vegetable matter is ashed slowly to create a vegetation ash suitable for use as a blank matrix for QC samples.

2. Apparatus

2.1. Beakers: 1-L, glass.

2.2. Aluminum foil.

2.3. Balance: 1-kg minimum capacity, 0.1-g accuracy.

2.4. Muffle furnace capable of reaching and sustaining a temperature of at least 550°C.

2.5. Engraver.

2.6. Bottle: 1-gallon capacity or smaller.

2.7. Sieve: No. 18

2.8. Ball mill and polyethylene container, with lid, for ball mill.

2.9. Steel balls: 5/8- to 3/4-in. diameter.

2.10. Vinyl tape.

2.11. Spatula.

2.12. Insulated gloves.

3. Reagents

3.1. Chicken Scratch or an equivalent vegetation feed may provide a suitable ash.

3.2. A suitable vegetation ash does not contain the analyte of interest and presents few interferences to the analytical method.

4. Procedure

4.1. The muffle furnace should be equipped with a safety switch which shuts the furnace off in case the temperature exceeds its setting. It should also be vented or located where fumes will not contaminate working spaces.

4.2. Weigh approximately 500 g of chicken feed into a 1-L beaker.

4.3. Dry the feed in a muffle furnace at 100°C for about 68 h.

4.4. Cover the beaker with aluminum foil perforated with 1/4- to 1/2-in. holes.

4.5. Ash the feed at 150°C for approximately 8 h, then raise the temperature and ashing time as follows:

200°C for approximately 16 h,
250°C for approximately 8 h,
300°C for approximately 16 h,
400°C for approximately 8 h,
450°C for approximately 16 h,
500°C for approximately 8 h, and
550°C for approximately 7 d.

4.6. Turn off the furnace and allow the sample to cool for about 16 h.

4.7. Remove the beaker from the furnace and transfer the ash to the ball mill container. Fill the container approximately half full and add about 95 steel balls. Cap the container and seal it with tape.

4.8. Place the container on the ball mill and grind the ash for about 1 h.

4.9. Allow the ash to settle before opening the container.

4.10. Sift the ash through a No. 18 sieve. Using a spatula, transfer the ash that passes through the sieve to a storage bottle and place the rest back into the ball mill

container. Repeat the grinding and sifting until all the ash has been ground and sifted.

4.11. Re-ash the matrix to constant weight.

4.11.1. Fill a 1-L beaker, engraved with an identifying number, approximately half full with sifted ash. Cover the beaker with aluminum foil perforated with 1/4- to 1/2-in. holes.

4.11.2. Weigh the covered beaker and ash. Record the weight in a Laboratory notebook.

4.11.3. Ash the feed in a muffle furnace at 250°C for approximately 75 min, then raise the temperature and ashing time as follows:

300°C for approximately 1 h,
350°C for approximately 1 h,
400°C for approximately 90 min,
450°C for approximately 90 min,
500°C for approximately 90 min, and
550°C for approximately 3 d.

4.11.4. Turn off the furnace and allow the ash to cool for approximately 16 h.

4.11.5. Weigh the covered beaker and ash. Record the weight and compare it with the previously recorded weight. If there has been no significant change and the ash is gray, no further ashing is necessary.

4.11.6. If there has been a significant change in weight or if the ash is not gray in color, reash the feed at 550°C for about 36 h. Continue weighing and re-ashing until the ash is gray and at a constant weight.

5. Proper Waste Disposal Practices

5.1. No waste is produced.

6. Source Materials

6.1. M. A. Gautier, E. S. Gladney, N. L. Koski, M. B. Phillips, E. A. Jones, and B. T. O'Malley, "Quality Assurance for Health and Environmental Chemistry: 1989," Los Alamos National Laboratory report LA-11995-MS (1990).

6.2. M. A. Gautier, E. S. Gladney, N. L. Koski, E. A. Jones, and B. T. O'Malley, "Quality Assurance for Health and Environmental Chemistry: 1990," Los Alamos National Laboratory report LA-12208-MS (1991).

*U.S. GOVERNMENT PRINTING OFFICE 1993-0-774-036/87013

Laboratory Safety

HSE-9 SAFETY MANUAL

COMPILED AND EDITED BY

PEGGY GAUTIER

ISSUED MAY 1987

REVISED JANUARY 1990

HSE-9 SAFETY MANUAL

ISSUED MAY, 1987

REVISED JANUARY, 1990

APPROVED BY:

Name	Date
Craig Leasure, HSE-9 Group Leader	4/12/90
Peggy Gautier, HSE-9 Safety Chairman	4-12-90

HSE-9 SAFETY MANUAL

ISSUED MAY, 1987

APPROVED BY:

Name	Date
Ron Gooley, HSE-9 Group Leader	July 29, 1987
Peggy Gautier, HSE-9 Safety Chairman	July 15, 1987
Jesse Aragon, HSE-DO	August 21, 1987

REVIEWED BY:

John Gallimore, HSE-1	7/22/87
Patty Mahoney, HSE-3	7/22/87
Fred Bolton, HSE-5	7/22/87

HSE-9 SAFETY TRAINING RECORD

If you have any questions regarding this material contact your Section Leader or a member of the HSE-9 Safety Committee.

I have read and understood the material presented in the HSE-9 Safety Manual in fulfillment of employment requirements regarding safety.

Return to the Group Office for filing by_____

Signed_____

Date_____

HSE-9 is required by HSE-Division to establish and maintain a record system on all aspects of their safety program. These records are subject to HSE-Division Audit.

NEW EMPLOYEE SAFETY CHECKLIST

Health and Environmental Chemistry, Group HSE-9

The supervisor will give a copy of this form to the safety chairman after reviewing it with the new employee.

_____1. Safety is the responsibility of each employee. If the employee has any questions concerning the safety of any aspect of a job assignment, the question must be brought to the attention of the employee's supervisor or the HSE-9 Group Leader.

_____2. Standard Operating Procedures (SOPs) that are applicable to the employees job assignment will be reviewed by the employee on an annual basis. An employee sign-off sheet will be initiated by the supervisor to document that the employee has read and understood the SOP. The sign-off sheets will be filed by the group safety coordinator.

_____3. Copies of the site emergency plan and instructions for actions during an emergency (e.g., fire, explosion, etc.) are in the HSE-9 Safety Manual. A sign-off sheet will be maintained to document that the employee has read and understood the most current site emergency plan.

_____4. It is Laboratory policy that all employees (drivers and passengers) wear seat belts while using government vehicles.

_____5. Employees who use government vehicles are responsible for notifying the HSE-9 Group Office of any problems (mechanical, electrical, etc.) with the vehicles.

_____6. Any accident involving an injury to the employee shall be reported to the group office, section leader, and to the group safety chairman. A formal report can be made after receiving medical treatment at HSE-2. An accident involving a potential injury shall be reported to the supervisor and the safety coordinator. Information concerning potential injuries may be useful in preventing injuries to other employees.

_____7. Any accident involving a government vehicle shall be reported to the group office. Local police must be notified immediately if a government vehicle accident involves a personal injury occurring off site.

_____8. Employees will attend group health and safety meetings.

I have read and understood the safety policies of the Health and Environmental Chemistry Group.

_____

Signature Date

PREFACE

Operational and building safety is of primary importance to HSE-9. This manual has been prepared to assist the employees in understanding safety hazards and in learning the proper response to emergency situations.

This manual includes sections on safety policy, the safety committee, emergency plans, emergency procedures, personal safety, and chemical safety. Topics such as emergency alarms, fire, evacuation, personnel training, building diagrams, chemical and radiation protection, and work philosophy are some of the subjects discussed in depth. Supplemental information is presented in the appendixes.

All who work in HSE-9 want accidents and injuries to be eliminated or kept to an absolute minimum and want methodical and safe response to unexpected incidents. Therefore, it is the responsibility of all members of HSE-9 to become familiar with the safety manual and to use safe working habits.

This document is the first edition of a formal safety manual of good health and safety practices for HSE-9 personnel. It will be reviewed annually and updated as necessary.

Copies of the Safety Manual distributed externally to the Los Alamos National Laboratory will not contain Appendixes I - VI. The enclosed document is to be used for informative purposes only. The Los Alamos National Laboratory, the University of California, and the Department of Energy expressly disclaim any liability for accident, injury or loss of property associated with the use by other agencies or organizations of this Los Alamos National Laboratory document in either its original or modified form.

ACKNOWLEDGMENTS

Thanks are due Stuart D. Nielsen and John Miglio for their past contributions to the Chemical Safety section of this manual. The general format of this manual was modeled after that used by MST Division for the TA-55 facility.

Peggy Gautier
Chairman, Safety Committee
Manual Editor

HSE-9 EMERGENCY TELEPHONE NUMBERS

1. For all emergencies call 911

   A. Sound local alarm.

   B. Give the following information on all 911 calls and stay on the line until the operator breaks the connection.

      Name_____

      Nature of emergency_____

      Location of TA_____ Bldg_____ Rm_____

      Your telephone no_____

   C. Notify your supervisor_____

   D. Remain in the area, if possible, to direct responding emergency units.

   E. Use fire extinguisher if you can do so without endangering yourself.

   F. Unless a life-threatening situation exists, do not move injured personnel.

   G. Report to the assembly area to be counted if evacuation is ordered.

2. Additional telephone numbers.

HSE Division Office		7-4218
HSE-1 Group Office		7-5296
HSE-2 Physician		7-7251
HSE-5 Group Office		7-5231
HSE-7 Group Office		7-4301
HSE-9 Group Office	Craig Leasure	7-3269
HSE-9 Section Leaders		
Radiochemistry	Daryl Knab	7-7094
Inorganic	Michael Bell	7-6011
Organic	Chris Leibman	7-5889
QA and Data Management	Peggy Gautier	7-6235
Tissue	Jim McInroy	7-4709

Protective Force Duty Officer 7-4437

Laboratory Emergency Duty Officer 7-6211

Health Division Assistance for Radiological, Chemical or
Industrial Accidents (8 am - 5 pm) 7-7878

Health Division Assistance (nonduty hours) 7-7080

HSE Division On-Call Emergency Coordinator (after hours)
Pager Number 104-2631
From a non-Lab Phone . . . . . 665-0351 then 2631

PAN AM Assistance 7-6191

3. Fire alarm--high pitched whooping sound.

4. Basement alarms TA-59.

   A. Ringing Bell. Immediate assistance required in room B4.

   B. High pitched sound and light by room 105 flashing. Immediate assistance required in room B8-K or B8-M.

   C. Lights activated on panel between room 105 and room 107. Alarm system for Tissue Section freezers.

5. Bomb Threat--Use checklist on page xv.

6. Evacuation--Shut down equipment, close doors, report to muster area.

7. HSE-9 After Hours Emergency On-Call List

HSE-9 Group Office . . . . . Group Leader	Craig Leasure	662-7685
Radiochemistry Acting Section Ldr. . . . . Radiochemistry Analysis, Bioassay Samples Environmental Samples, Radiocounting	Daryl Knab	672-9540
QA & Data Management Section Ldr . . . . . QA & Data Management, Bioassay Samples	Peggy Gautier	662-5205
Inorganic Section Leader . . . . . Inorganic Analysis, Inorganic Samples Waste Treatment Samples	Mike Bell	662-3673
Organic Section Leader . . . . . Organic Analysis, PCB Analysis Organic Samples, Solvents Analysis	Chris Leibman	988-5372

BOMB THREAT CALL CHECKLIST

INSTRUCTIONS: IF RECEIVED BY TELEPHONE, BE CALM AND LISTEN CAREFULLY, DO NOT INTERRUPT OR ANTAGONIZE THE CALLER. ATTEMPT TO KEEP THE CALLER ON THE LINE WHILE SIGNALING ANOTHER PERSON THAT YOU HAVE A BOMB THREAT. THE OTHER PERSON SHOULD DIAL 911 AND ASK THAT THE EMERGENCY OPERATIONS CENTER BE NOTIFIED THAT A BOMB THREAT HAS BEEN RECEIVED AND INSTRUCT THEM AS TO WHAT TELEPHONE LINE THE THREAT CAME IN ON. AFTER NOTIFICATION, THE OTHER PERSON SHOULD TRY TO JOIN YOU ON THE THREAT LINE AND TAKE NOTES OF THE CONVERSATION AS THE CALLER IS TALKING.

Time and date received: _____

How received: _____ Time caller hung up: _____

Exact words of the caller: _____

_____

_____

QUESTIONS TO ASK:
1. When is the bomb going to explode? _____
2. Where is the bomb right now? _____
3. What kind of bomb is it? _____
4. What does it look like? _____
5. Why did you place the bomb? _____
6. Where are you calling from? _____

Describe the callers voice _____

MALE____FEMALE____YOUNG____OLD____ACCENT_____TONE OF VOICE _____

Background noise: _____

Is the voice familiar?_____ Who does it sound like? _____

Other voice characteristics: _____

Remarks: _____

_____

_____

Your name, address and telephone number: _____

_____

When 911 is called regarding a bomb threat, there are several services that are alerted to the fact that a threat has been received against the laboratory. Emergency management is immediately notified by the Protective Force and a phone trace is initiated by the Police Department. If the threat is a short telephone conversation and you are unable to keep the caller on line, it is still possible to receive a trace; however, if the call originated from other than a local exchange, a trace can be accomplished only if the caller stays on the line for a longer time.

Trying to develop a rapport with the telephone caller and being sympathetic to his cause seems to work best. The caller is looking for recognition and fulfilling that need can help to keep the conversation going. It is impossible to suggest what will work with each caller. If you do develop rapport with the individual, you may be surprised at the amount of information that you can obtain. One of the last questions that needs to be asked (and one of the most important) is the callers name, address, and the phone that they are using. Believe it or not, many bomb threat callers have given the above information simply because they were asked to furnish it.

REMEMBER, REMAIN CALM AND OBTAIN AS MUCH INFORMATION AS POSSIBLE!

SOURCE MATERIALS

Administrative Manual, Section 900 Health and Safety, Los Alamos National Laboratory (November 1985).

Administrative Manual, Section 700 Employee Responsibilities, Los Alamos National Laboratory (May 1983).

L. A. Gritzo, "Transmittal of Laboratory Standard Operating Procedures (SOPs) to External Agencies," Los Alamos National Laboratory memorandum M-DO-1177 (June 14, 1988).

D. W. Apts and K. L. Blankenship, *Back Facts*, 2nd ed. (FPR, Inc., Ashland, Kentucky, 1981).

W. Braker, A. L. Mossman, and D. S. Siegel, *Effects of Exposure to Toxic Gases-First Aid and Medical Treatment*, 2nd ed. (Matheson Publications, Lyndhurst, New Jersey, 1979).

Cardiopulmonary Resuscitation (The American National Red Cross, 1981).

"Designation of Hazardous Substances," 40 CFR 116.

Electrical Safety Training Course Manual, Group HSE-3, Los Alamos National Laboratory, (1986).

"Emergency Planning, Preparedness, and Response for Operations," DOE Order 5500.2 (August 1981).

"Environmental Protection, Safety, and Health Protection Program for DOE Operations," Department of Energy Order 5480.1A (August 1981).

Environmental, Safety, and Health Bulletin, DOE/ED-0003, Issue No. 14 (September 1985).

Guide to Safe Handling of Compressed Gases (Matheson Publications, Lyndhurst, New Jersey, 1982).

Handbook of Fire Protection, 15th Ed., National Fire Protection Association (NFPA) (1982).

"Hazard Communication Standard," 29 CFR 1910.1200.

Health and Safety Manual, Los Alamos National Laboratory (March 1986).

"Health Safety and Environment Division Emergency Operations Plan," HSE Division internal document, Los Alamos National Laboratory (June 1986).

"Los Alamos National Laboratory Emergency Response Plan," (September 1985).

Matheson Gas Data Book, 6th ed. (Matheson Publications, Lyndhurst, New Jersey, 1980).

NIOSH Pocket Guide to Chemical Hazards (U.S. Government Printing Office, Washington D.C., September 1985).

NIOSH/OSHA Occupational Health Guidelines for Chemical Hazards (US Department of Health and Social Services and US Department of Labor 1981).

"Occupational Safety and Health Standards," 29 CFR 1910 (revised June 1981).

Safety in Academic Chemistry Laboratories, 4th ed. (American Chemical Society Committee on Chemical Safety, Washington, D.C., 1985).

G. J. Shugar, R. A. Shugar, and L. W. Bauman, *Chemical Technicians' Ready Reference Handbook*, 2nd ed. (McGraw-Hill Book Company, New York, 1981), Chap. 1.

TABLE OF CONTENTS

1. SAFETY POLICY

1.1. Los Alamos National Laboratory Safety Policy Statement . . . . . LS 1-3

1.2. HSE Division Safety Policy Statement . . . . . LS 1-6

1.3. HSE-9 Safety Policy Statement . . . . . LS 1-7

1.4. HSE-9 Safety Committee Charter . . . . . LS 1-9

1.4.1. Membership . . . . . LS 1-9

1.4.2. Support Services . . . . . LS 1-9

1.4.3. Organization . . . . . LS 1-9

1.4.4. Meetings . . . . . LS 1-9

1.4.5. Goals . . . . . LS 1-9

1.4.6. Activities . . . . . LS 1-9

1.4.7. Inspection Teams . . . . . LS 1-10

2. EMERGENCY PLAN

2.1. Introduction . . . . . LS 2-3

2.2. General Objectives . . . . . LS 2-3

2.3. Possible Emergencies . . . . . LS 2-3

2.4. Emergency Organization . . . . . LS 2-4

2.4.1. Chain of Command . . . . . LS 2-4

2.5. Emergency Response Team . . . . . LS 2-4

2.5.1. Definition . . . . . LS 2-4

2.5.2. Training . . . . . LS 2-5

2.5.3. Team Response . . . . . LS 2-5

2.6. Emergency Alarms . . . . . LS 2-5

2.6.1. Individual Alarms at TA-59 . . . . . LS 2-5

2.6.2. Activation of Alarms . . . . . LS 2-5

2.6.3. Familiarization of Personnel with Alarm Sounds . . . . . LS 2-6

2.7. Emergency Equipment and Its Location . . . . . LS 2-6

2.7.1. Safety Showers . . . . . LS 2-6

2.7.2. Eyewash Stations . . . . . LS 2-6

2.7.3. Fire Extinguishers . . . . . LS 2-7

2.7.4. First Aid Kits . . . . . LS 2-7

2.7.5. Chemical Spill Clean-Up Kits . . . . . LS 2-7

2.8. Accounting for Personnel in HSE-9 . . . . . LS 2-7

2.9. Building Evacuation . . . . . LS 2-7

2.9.1. Test Evacuation . . . . . LS 2-7

2.9.2. General Evacuation Guidelines . . . . . LS 2-7

2.10. Review of Group Emergency Plan . . . . . LS 2-8

2.11. HSE-9 Responsibilities within the HSE-DO Emergency Plan . . . . . LS 2-8

3. EMERGENCY RESPONSE

3.1. Introduction . . . . . LS 3-3

3.2. Emergency Site Plans for TA-59, TA-50, TA-35, and TA-2 Omega Site . . . . . LS 3-3

3.3. Basic Guidelines for Emergency Response in HSE-9 . . . . . LS 3-3

3.4. Fire Alarm Response . . . . . LS 3-4

3.4.1. Immediate Response . . . . . LS 3-4

3.4.2. General Fire Fighting Procedures . . . . . LS 3-4

3.4.3. Types of Fire Extinguishers . . . . . LS 3-5

3.5. Evacuation Alarm Response . . . . . LS 3-5

3.5.1. Equipment Shutdown for Evacuation . . . . . LS 3-5

3.5.2. Building Evacuation . . . . . LS 3-6

3.5.3. Emergency Control Center . . . . . LS 3-6

3.5.4. Emergency Response Team Action . . . . . LS 3-6

3.6. Emergency Situations . . . . . LS 3-6

3.6.1. Vehicle Accident . . . . . LS 3-6

3.6.2. Toxic Releases . . . . . LS 3-6

3.6.3. Fire and Explosion . . . . . LS 3-7

3.6.4. Natural Disasters . . . . . LS 3-7

3.6.5. Occupational or Industrial Accidents . . . . . LS 3-7

3.6.6. Radioactive Material Incidents . . . . . LS 3-7

3.6.7. Utility Service Failures . . . . . LS 3-8

3.6.8. Medical Illness . . . . . LS 3-8

3.6.9. Terrorist Attack . . . . . LS 3-8

3.6.10. Bomb Threat . . . . . LS 3-8

3.7. Emergency Response after Work Hours . . . . . LS 3-8

3.8. HSE-9 Response within the HSE-Division Emergency Operations Plan . . . . . LS 3-8

3.8.1. Responsibilities . . . . . LS 3-8

3.8.2. Chemical Analyses . . . . . LS 3-9

3.8.3. Personnel Resources . . . . . LS 3-9

3.8.4. Equipment Resources . . . . . LS 3-9

4. PERSONNEL SAFETY

4.1. Introduction . . . . . LS 4-3

4.2. Responsibility for Safety . . . . . LS 4-3

4.2.1. Individual Employee Responsibilities . . . . . LS 4-3

4.2.2. Supervisory Personnel Responsibilities . . . . . LS 4-5

4.2.3. Group Leader Responsibilities . . . . . LS 4-6

4.2.4. External Support Organizations . . . . . LS 4-6

4.2.5. Accident Reporting . . . . . LS 4-7

4.3. Personal Protective Equipment . . . . . LS 4-7

4.3.1. Eye Protection . . . . . LS 4-7

4.3.2. Hand Protection . . . . . LS 4-8

4.3.3. Foot Protection . . . . . LS 4-8

4.3.4. Protective Clothing . . . . . LS 4-8

4.3.5. Respiratory Protection . . . . . LS 4-9

4.3.6. Radiation Monitoring . . . . . LS 4-9

4.4. Substance Abuse . . . . . LS 4-9

4.4.1. Policy . . . . . LS 4-9

4.4.2. Employee Assistance . . . . . LS 4-10
4.4.3. Fitness for Duty . . . . . LS 4-10
4.4.4. Conviction for Substance Abuse Violations . . . . . LS 4-10
4.4.5. Policy Violations . . . . . LS 4-10
4.5. Facilities and Equipment Management . . . . . LS 4-11
4.5.1. Class A Facilities and Equipment . . . . . LS 4-11
4.5.2. Class B Facilities and Equipment . . . . . LS 4-11
4.5.3. Government Vehicles . . . . . LS 4-11
4.5.3.1. Seat Belts . . . . . LS 4-11
4.5.3.2. Two Wheel Vehicles . . . . . LS 4-12
4.5.3.3. Vehicle Accident . . . . . LS 4-12
4.5.3.4. Vehicle Inspection . . . . . LS 4-12
4.6. Risk Management . . . . . LS 4-12
4.7. Accountability . . . . . LS 4-13
4.8. Employee Safety Training . . . . . LS 4-13
4.8.1. Job-Specific Training . . . . . LS 4-14
4.8.2. Training New/Transferred Employees . . . . . LS 4-15
4.8.3. Non-Job-Specific Training . . . . . LS 4-15
4.8.4. Supervisory Training . . . . . LS 4-16
5. GENERAL LABORATORY PROCEDURES
5.1. Introduction . . . . . LS 5-3
5.2. Safety Rules for Laboratories . . . . . LS 5-3
5.3. Housekeeping . . . . . LS 5-4
5.4. Corridors, Stairs, and Exitways . . . . . LS 5-4
5.5. Bottle Disposal . . . . . LS 5-4
5.6. Scalpel Blade and Hypodermic Needle Disposal . . . . . LS 5-4
5.7. Drying Ovens . . . . . LS 5-5
5.8. Refrigerators . . . . . LS 5-5
5.9. Centrifuges . . . . . LS 5-5

5.10. Fume Hoods . . . . . LS 5-5
5.11. Storage of Chemicals . . . . . LS 5-6
5.12. Container Labels . . . . . LS 5-7
5.13. Compressed Gases . . . . . LS 5-7
5.14. Glassware . . . . . LS 5-9
5.14.1. Preparing Glass Tubing . . . . . LS 5-9
5.14.2. Ground Glass Stoppers . . . . . LS 5-9
5.15. Electrical Safety . . . . . LS 5-9
5.16. Lifting and Carrying . . . . . LS 5-10
5.17. After Hours Work . . . . . LS 5-11
6. CHEMICAL SAFETY AND CHEMICAL HAZARD COMMUNICATION
6.1. Introduction . . . . . LS 6-3
6.2. Chemical Spills . . . . . LS 6-3
6.3. Organic Peroxides . . . . . LS 6-3
6.4. Acids and Alkalies . . . . . LS 6-4
6.5. Oxidizing Agents . . . . . LS 6-4
6.6. Perchloric Acid . . . . . LS 6-5
6.7. Organic Solvents . . . . . LS 6-5
6.8. Carcinogens, Mutagens, and Teratogens . . . . . LS 6-6
6.9. Metals . . . . . LS 6-7
6.9.1. Mercury . . . . . LS 6-8
6.9.2. Cadmium . . . . . LS 6-8
6.9.3. Beryllium . . . . . LS 6-8
6.9.4. Reactivity with Water . . . . . LS 6-8
6.10. Cyanides and Nitriles . . . . . LS 6-8
6.11. Hydrogen Sulfide . . . . . LS 6-9
6.12. Flammable Liquids . . . . . LS 6-9
6.13. Cryogenic Liquids and Solids . . . . . LS 6-10
6.14. Radioactive Materials . . . . . LS 6-10

6.15. Hazardous Waste Management . . . . . LS 6-12

6.15.1. Introduction . . . . . LS 6-12

6.15.2. Definition of Hazardous Waste . . . . . LS 6-12

6.15.3. Temporary Storage of Hazardous Waste . . . . . LS 6-13

6.15.4. Chemical Waste Coordinator . . . . . LS 6-14

6.15.5. Disposal of Chemicals and Hazardous Waste . . . . . LS 6-14

6.15.6. Hazardous Waste Minimization . . . . . LS 6-15

6.15.7. Recyclable Materials . . . . . LS 6-15

6.16. Hazardous Material Transport On-Site . . . . . LS 6-15

6.16.1. Introduction . . . . . LS 6-15

6.16.2. Policy . . . . . LS 6-16

6.16.3. HAZPACT Coordinators . . . . . LS 6-16

6.17. Chemical Hazard Communication . . . . . LS 6-16

6.17.1. Introduction . . . . . LS 6-16

6.17.2. Program Elements . . . . . LS 6-17

6.17.3. Evaluation of Operations . . . . . LS 6-17

6.17.4. Hazard Notification and Training . . . . . LS 6-17

6.17.5. Training Support . . . . . LS 6-18

6.17.6. Chemical Inventory . . . . . LS 6-18

6.17.7. Material Safety Data Sheets . . . . . LS 6-18

6.17.8. Labeling of Hazardous Materials . . . . . LS 6-19

6.17.9. Procurement . . . . . LS 6-19

6.17.10. Packaging and Transport . . . . . LS 6-19

7. LABORATORY FIRST AID

7.1. Introduction . . . . . LS 7-3

7.2. Bleeding Aid . . . . . LS 7-3

7.3. Breathing Aid . . . . . LS 7-3

7.3.1. Check for Unresponsiveness . . . . . LS 7-3

7.3.2. Airway Step . . . . . LS 7-3

7.3.3. Quick Step . . . . . LS 7-3
7.3.4. Check Step . . . . . LS 7-4
7.3.5. Hand Position for Chest Compressions . . . . . LS 7-4
7.3.6. Chest Compressions . . . . . LS 7-4
7.3.7. Push 15—Breathe 2 . . . . . LS 7-4
7.3.8. Recheck Pulse . . . . . LS 7-4
7.4. Burn Aid . . . . . LS 7-5
7.4.1. First-Degree Burns . . . . . LS 7-5
7.4.2. Second-Degree Burns . . . . . LS 7-5
7.4.3. Third-Degree Burns . . . . . LS 7-5
7.5. Electric Shock . . . . . LS 7-5
7.6. Eye Aid . . . . . LS 7-6
7.7. Fracture Aid . . . . . LS 7-6
7.8. Poisoning Aid . . . . . LS 7-6
7.8.1. Conscious Victim . . . . . LS 7-6
7.8.2. Unconscious Victim . . . . . LS 7-6
7.8.3. Convulsing Victim . . . . . LS 7-6
7.9. Shock Aid . . . . . LS 7-7
7.10. Skin Aid . . . . . LS 7-7
Emergency Site Plans . . . . . APPENDIX I
TA-59 Emergency Site Plan P-1
TA-50 Emergency Plan for Building 1 . . . . . P-2
TA-35 Emergency Action Procedures for TSL-2 . . . . . P-3
Omega Site Emergency Plan P-4
HSE-Division Safety Policy and Program . . . . . APPENDIX II
HSE-9 Standard Operating Procedures . . . . . APPENDIX III
Analysis of Cyanide and Sulfide Waste Samples SOP1-1
Disposal of Solid Radioactive Waste from HSE-9 Group Areas at OH-1 . . . . SOP2-1
Handling and Disposal of Hazardous Materials SOP3-1

Handling Human Biological Fluids SOP4-1

Handling Samples Contaminated with TRU Waste SOP5-1

Sample Irradiation Procedures for the Omega West Reactor SOP20-1

Scintillation Vial Disposal SOP21-1

Video-taped Training Material . . . . . APPENDIX IV

Personnel Radiation Exposure Control . . . . . APPENDIX V

Reprints . . . . . APPENDIX VI

TABLE OF CONTENTS

1. SAFETY POLICY

1.1. Los Alamos National Laboratory Safety Policy Statement . . . . . LS 1-3

1.2. HSE Division Safety Policy Statement . . . . . LS 1-6

1.3. HSE-9 Safety Policy Statement . . . . . LS 1-7

1.4. HSE-9 Safety Committee Charter . . . . . LS 1-9

1.4.1. Membership . . . . . LS 1-9

1.4.2. Support Services . . . . . LS 1-9

1.4.3. Organization . . . . . LS 1-9

1.4.4. Meetings . . . . . LS 1-9

1.4.5. Goals . . . . . LS 1-9

1.4.6. Activities . . . . . LS 1-9

1.4.7. Inspection Teams . . . . . LS 1-10

Health, Safety, and Environment Policies

Introduction

The Laboratory's health, safety, and environment policies, as stated below, are implemented through the administrative requirements found in this Manual. The Health, Safety, and Environment Council, whose members are chosen from upper-level management, recommends policies to the Director and oversees policy implementation.

1. Overall Policy

The Laboratory will provide the highest possible level of protection to its employees, the public, government property, and the environment from harm that could arise from Laboratory operations. To accomplish this objective, (1) line management will be responsible for conducting only those operations and activities that can be controlled safely; (2) the Health, Safety, and Environment Division will maintain a comprehensive health, safety, and environment program to assist line management and to provide an overview of health, safety, and environment activities; and (3) Laboratory employees will be required to observe the health, safety, and environment procedures and requirements specified by their supervisors.

2. Management Responsibility

The primary responsibility for employee health and safety on the job as well as for environmental protection from Laboratory operations rests with line management; this responsibility will be given first priority before Laboratory operations are approved or carried out. Supervisors are expected to recognize and anticipate potential hazards, to inform employees of risks associated with their work, to specify protective measures, and to ensure that their employees receive appropriate training. Supervisors also will establish and maintain a system to ensure that appropriate consideration is given to significant changes made in operations, procedures, materials, or equipment that could affect the safety of an activity, including environmental impact.

3. Employee Responsibility

Employees are often in the best position to evaluate health and safety risks that might result in harm to themselves and their coworkers. Therefore, Laboratory employees are responsible for observing applicable health, safety, and environment procedures; for using prescribed personal protective equipment; for promptly reporting accidents, injuries, and unsafe conditions; and for participating in required medical and biological monitoring programs.

4. Health, Safety, and Environment Division Responsibility

The Health, Safety, and Environment (HSE) Division will initiate and promote a comprehensive health, safety, and environment program, which will include such special fields as radiation protection, occupational medicine, industrial safety, industrial hygiene, nuclear criticality safety, waste management, and environmental protection and preservation. HSE Division will address special requirements or needed emphasis within these programs, such as maintenance of toxic and radiation levels as low as reasonably achievable; transportation, handling, and disposal of hazardous materials; specific health, safety, and environment training; and emergency response. An appraisal program will be maintained by HSE Division to ensure that the Laboratory's health, safety, and environment policies are appropriately interpreted and seek to minimize risk, and to assist Laboratory organizations in implementing programs consistent with those policies. Laboratory activities will be monitored and any activity or situation that is inconsistent with good health, safety, and environment practices will be brought to the responsible manager's attention.

5. Training

Laboratory employees will be provided with health, safety, and environment training to help them safely perform their assigned tasks. This training will emphasize the Laboratory's health, safety, and environment procedures--particularly recognition and control of potential hazards--to enable employees to better evaluate risks associated with their work.

Supervisors will instruct their employees in applicable health, safety, and environment procedures relevant to specific job requirements and will maintain records to reflect the current status of training received by each employee, including certification and retraining.

6. Transportation of Hazardous Materials

Off-site and on-site shipments of radioactive and other hazardous materials and waste will be made in accordance with applicable regulations. These shipments will be made in a manner that protects the health and safety of employees and the public and minimizes the potential for release of such materials to the environment.

7. Siting Activities or Facilities in Hazardous Areas

The Laboratory will generally avoid siting unrelated or nonhazardous activities in potentially or known hazardous areas. If a short-term (up to 6 months) activity or operation is planned for such a hazardous area, a special work permit must be prepared by the division proposing the activity and approved by the division leader responsible for the area and the Health, Safety, and Environment Division Leader. If the activity is planned for a period of 6 months or more, it also must be approved by the Health, Safety, and Environment Council.

8. Protection of Certain Classes of Employees

Employment and activities of certain employees will be restricted in accordance with applicable federal and state regulations.

People with Disabilities. The Laboratory makes reasonable accommodations for disabled employees or applicants, unless the accommodation will impose undue hardship on Laboratory operations (see *Administrative Policies and Procedures Manual*, Sec. AM 115).

The Occupational Medicine Group (HSE-2) determines work restrictions made necessary by the employee's or prospective employee's disability. HSE-2 also conducts a medical evaluation and recommends appropriate accommodatio to permit an employee to continue working when that person becomes or is believed to have become disabled.

Women of Childbearing Age. The Laboratory recognizes that women of childbearing age engaged in certain occupations may require special consideration. To enable the Laboratory to provide the necessary protection, a female employee working in a radiation area or with toxic materials must report a pregnancy or planned pregnancy to the Occupational Medicine (HSE-2) Group Leader. The need for temporary restrictions or change of work assignment then will be determined on a case-by-case basis and discussed with the appropriate supervisor to protect both the employee and the fetus. Such temporary restrictions or transfers will not result in an economic penalty or a change in status for the employee.

9. Safety of Contract Personnel and Visitors

A safe work environment will be provided for contract personnel and visitors. This includes certain health protection services provided by HSE Division. The Laboratory's health, safety, and environment rules will be enforced for everyone visiting or working at the Laboratory. Laboratory employees who visit or work at another installation will strictly observe that facility's health, safety, and environment regulations.

1.2. HSE Division Safety Policy Statement

HSE DIVISION SAFETY POLICY AND PROGRAM

REVISED - DECEMBER 1988

APPROVED BY:

JOHN M. PUCKETT

DIVISION LEADER

The HSE Division shall conduct its activities in such a manner that the health and safety of all its employees, guests and the public are protected, and that the probability of damage to property and the environment are reduced to the lowest level reasonably achievable.

The Division Leader (DL), each Group Leader (GL) and Program Office Manager (PL) shall develop and implement a program that addresses the health, safety and environment risks (referred to hereafter as "Safety" Program) associated with that group's activities and is in conformance with the Laboratory's Health and Safety Manual and DOE requirements.

DLs, GLs and PLs are responsible for their programs and shall make sure that each employee is aware of and meets his safety responsibilities.

GLs and PLs shall evaluate their individual programs on an annual basis and report their findings to the HSE Division Leader by January 30 of each year.

For the purpose of this document, "Group" shall be understood to mean all organizational units within the Division, including the Division Office.

The entire HSE Division Health, Safety and Environment Policy and Program is reproduced in full in Appendix II.

1.3. HSE-9 Safety Policy Statement

Los Alamos

Los Alamos National Laboratory
Los Alamos, New Mexico 87545

memorandum

TO: HSE-9 Personnel

DATE: January 12, 1990

FROM: Craig Leasure, HSE-9 Group Leader CSL

MAIL STOP/TELEPHONE: K484/3269

SYMBOL: HSE-9/86-345

SUBJECT: HSE-9 SAFETY POLICY

Health and Environmental Chemistry management recognizes that chemical operations are potentially hazardous to its employees. HSE-9 will conduct its operations in compliance with the general health and safety policy of the Laboratory. Particular emphasis is placed on assuring that all hazardous operations are conducted to provide for the protection of HSE-9 employees or the operation will not be conducted.

Line management of HSE-9 will be responsible for the establishment, implementation, and maintenance of an effective health, safety, and environment program for all facilities and activities under their control. HSE-9 management advises that any person performing or expecting to be performing operations he feels unsafe shall cease those operations until he is convinced they are safe. All HSE-9 employees shall keep the risk of their activities at the lowest levels achievable.

To assist HSE-9 employees in conducting their operations safely, the following general safety rules apply.

- Any operation deemed hazardous enough to require assistance in case of an emergency will be conducted only when another individual is nearby.
- With the exception of office work, working alone after hours is categorically forbidden.
- All hazardous work, including work with hazardous chemicals, should be evaluated to determine if an SOP/SWP is required.
- All operations will be conducted to verify that the least flammable materials are used in the operation and that all general fire protection rules are followed.
- All new procedures shall be reviewed by the section leader, the group office, and appropriate Health Division personnel to verify that hazards have been defined before the project begins.

A conscientious and continuing safety training program will improve safety performance in today's work environment. HSE-9 supports this philosophy by implementing a safety training program and a laboratory safety manual for its employees. Periodic safety meetings and safety inspections are conducted to inform HSE-9 personnel of safety considerations.

We will continue to make HSE-9 a safe working environment by informing employees of work-related risks, specifying the necessary protective measures, helping employees to recognize potential hazards, and assuring our employees are properly trained. Employees who do not follow safety procedures may be subject to appropriate disciplinary action up to and including dismissal.

1.4. HSE-9 Safety Committee Charter

The HSE-9 Safety Committee provides assistance to group management in the areas of health and safety. The primary objective of this committee is the promotion of individual and corporate safety in the HSE-9 working areas. The committee coordinates safety activities, facilitates communication, and deals with group-wide problems.

1.4.1. Membership

Safety committee members are appointed by the group leader for staggered two-year terms to ensure the continuity of the safety committee. In addition to the chairman of the committee, members include one representative from each section.

1.4.2. Support Services

The safety committee can invite to its meetings support personnel from health physics (HSE-1, -10, -11), occupational medicine (HSE-2), safety (HSE-3), industrial hygiene (HSE-5), waste management (HSE-7), maintenance and operations (ENG-4), and other groups as needed. These persons will not be voting members of the committee.

1.4.3. Organization

A chairman is appointed by the group leader for a term of two years and the chair rotates through the sections. The committee elects other officers (e.g., secretary) from the membership for a term of one year. Committee members may be assigned specific tasks, such as training, inspection scheduling and coordination, as determined by the committee.

1.4.4. Meetings

The safety committee will meet as required to pursue the safety program, but not less than quarterly.

1.4.5. Goals

The major goals of the safety committee are to create a safer working environment for HSE-9 and to increase safety awareness of HSE-9 employees both on and off the job.

1.4.6. Activities

The safety committee recommends safety-related actions to the group leader. Specific activities of the committee include the following.

- Attend committee meetings or arrange for a substitute.

- Prepare and distribute minutes of meetings to HSE-DO, HSE-3, and the HSE-9 group office.

- Verify compliance with policies and review any prior recommendations at each meeting to determine progress and/or status of the recommendations.

- Arrange for electrical and safety inspections to identify hazards of physical facilities, equipment, materials, and procedures.

- Maintain a file of inspection reports and follow-up actions.

- Arrange programs for a minimum of four safety meetings per year for HSE-9 personnel. Document the topic of each meeting and attendance. Line managers must put their title after their name. File these records in the HSE-9 group office and send copies to HSE-DO.

- Review the HSE-9 Safety Manual annually and issue revisions as needed.

- Review annually the Emergency Response Plans for the areas where HSE-9 members are working.

- Receive reports of HSE-9 accidents, incidents, and unusual occurrences and make such records available to authorized personnel. Encourage and participate in the preparation of reports of unusual occurrences.

- Determine training needs and provide comprehensive and job-specific training to each employee.

- Promote safety awareness and encourage safety-related communication on all levels.

- Assess risks related to HSE-9 activities and determine if Standard Operating Procedures (SOPs) or Special Work Permits (SWPs) may be needed.

- Review all SOPs initially, annually, and whenever major changes are made to processes, equipment, or facilities. Maintain written records of such reviews and send written notification to HSE's SOP Office when the review is completed.

- Assist the HSE-9 group office on other safety-related issues.

1.4.7. Inspection Teams

A safety inspection team consists of at least one staff member and two technicians and can be accompanied by others, including a representative from HSE-3.

The team leader writes a report of the inspection, emphasizing repeat items, and gives the report to the safety committee chairman within one week. Line managers present during safety inspections must be noted by name and title in the written report.

The schedule of inspections for an entire calendar year is set up by the safety committee chairman at the beginning of the year. At least one electrical and two general safety inspections will be conducted each year.

TABLE OF CONTENTS

2. EMERGENCY PLAN

2.1. Introduction . . . . . LS 2-3

2.2. General Objectives . . . . . LS 2-3

2.3. Possible Emergencies . . . . . LS 2-3

2.4. Emergency Organization . . . . . LS 2-4

2.4.1. Chain of Command . . . . . LS 2-4

2.5. Emergency Response Team . . . . . LS 2-4

2.5.1. Definition . . . . . LS 2-4

2.5.2. Training . . . . . LS 2-5

2.5.3. Team Response . . . . . LS 2-5

2.6. Emergency Alarms . . . . . LS 2-5

2.6.1. Individual Alarms at TA-59 . . . . . LS 2-5

2.6.2. Activation of Alarms . . . . . LS 2-5

2.6.3. Familiarization of Personnel with Alarm Sounds . . . . . LS 2-6

2.7. Emergency Equipment and Its Location . . . . . LS 2-6

2.7.1. Safety Showers . . . . . LS 2-6

2.7.2. Eyewash Stations . . . . . LS 2-6

2.7.3. Fire Extinguishers . . . . . LS 2-7

2.7.4. First Aid Kits . . . . . LS 2-7

2.7.5. Chemical Spill Clean-Up Kits . . . . . LS 2-7

2.8. Accounting for Personnel in HSE-9 . . . . . LS 2-7

2.9. Building Evacuation . . . . . LS 2-7

2.9.1. Test Evacuation . . . . . LS 2-7

2.9.2. General Evacuation Guidelines . . . . . LS 2-7

2.10. Review of Group Emergency Plan . . . . . LS 2-8

2.11. HSE-9 Responsibilities within the HSE-DO Emergency Plan . . . . . LS 2-8

Figures

Fig. 2.1. Emergency Chain of Command at HSE-9 . . . . . LS 2-4

Fig. 2.2. TA-59, Bldg. OH-1, 1st Floor . . . . . LS 2-10

Fig. 2.3. TA-59, Bldg. OH-1, Basement . . . . . LS 2-11

Fig. 2.4. TA-50, Bldg. LD-1 1st Floor . . . . . LS 2-12

Fig. 2.5. TA-50, Bldg. LD-1, Basement . . . . . LS 2-13

Fig. 2.6. TA-35, Bldg. TSL-2 . . . . . LS 2-14

2. EMERGENCY PLAN

2.1. Introduction

Emergencies are situations that endanger or adversely affect people, property, or the environment, occur rapidly and unexpectedly, and require immediate action. Emergencies of concern to HSE-9 may occur within our Group or may originate elsewhere in the Laboratory.

The keys to successful emergency response lie in anticipation, advance planning, and adequate preparation, along with the use of generalized guidelines for specific types of possible emergencies. The remainder of this section discusses the emergency organization, the Emergency Response Team (ERT), the emergency alarm system, the emergency equipment at TA-59 and TA-50, personnel accountability, and the test evacuation. Section 3, Emergency Response, discusses general guidelines for emergency response to major anticipated emergencies.

2.2. General Objectives

This emergency plan is to provide protective measures for possible emergencies and to minimize the consequences of any accident in HSE-9. The plan is to

- provide a timely and organized response,
- minimize injury to personnel,
- minimize damage to laboratory property, and
- restore normal operations as quickly as possible.

2.3. Possible Emergencies

Possible emergencies occurring in HSE-9 are as follows:

- utility failures,
- occupational accidents,
- medical illness or injury.
- vehicle accident,
- fires and explosions,
- hazardous materials release,
- natural disasters, such as heavy snowfall or forest fire,
- radiological incidents, and
- terrorist attack.

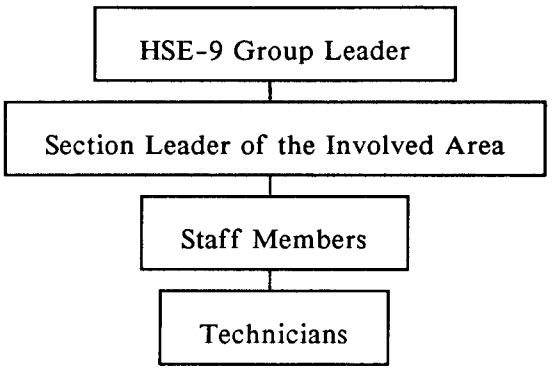

Fig. 2.1. Emergency chain of command at HSE-9.

2.4. Emergency Organization

2.4.1. Chain of Command

The HSE-9 Group Leader or his designee is the Emergency Coordinator and will respond to all emergency situations involving HSE-9. The responsibility for directing emergency response during emergencies is automatically delegated to individuals on the scene according to the chain of command shown in Fig. 2.1.

When emergencies arise, the first person on the scene is to coordinate all emergency response activities. This responsibility can only be transferred upon arrival of a person of higher authority in the emergency chain of command. In all emergencies close cooperation and communication is mandatory.

2.5. Emergency Response Team

2.5.1. Definition

The Emergency Response Team (ERT) is composed of members of HSE-9 who have been trained and certified in first aid and CPR and are knowledgeable about the operations in HSE-9. An Emergency Response Team Leader will be appointed by the Group Leader. The Emergency Response Team Leader's duties are to ensure that the team is trained and certified on skills, techniques, equipment, and procedures to effectively respond to any potential emergency situations in HSE-9 and to see that team certifications remain current. The Team Leader provides current ERT membership listings to the HSE-9 Group Leader.

2.5.2. Training

The HSE-9 Emergency Response Team receives the following training.

Topic	Frequency of Training
Red Cross First Aid	Every 3 years
Red Cross CPR	Every year
Chemical Spill Response	Every year

The HSE-9 Safety Committee will sponsor other safety-related courses upon request.

2.5.3. Team Response

Emergency team members are expected to respond independently to situations requiring CPR and first aid. The ERTs duties are as follows:

- Perform emergency first-aid and CPR.
- Take immediate actions necessary for safe shutdown of operations in the area.
- Assist in describing and evaluating the emergency situation.

2.6. Emergency Alarms

2.6.1. Individual Alarms at TA-59

Alarm	Sound
B4 Alarm	Ringing Bell
B8-K and B8-M Alarm	High Pitch with Flashing Light by Room 105
Freezer Alarm	Lights Activated on Panel by Room 105

Action upon sounding of an alarm is outlined in Emergency Response, Section 3.

2.6.2. Activation of Alarms

- Fire Alarm. Primary fire detection is provided by a sensor system on the wet pipe sprinkler that alerts Fire Department Headquarters. For manual activation of the alarms, use any fire-alarm box shown in Figs. 2.2.-2.6. Fires in HSE-9 laboratories are serious because of the potential damage from the fire itself and the reactive nature of the chemicals in use.

- Evacuation Alarm. Evacuation of building OH-1 for other than fire is announced over the PA system.

- B4 Basement Alarm. The alarm system is activated by pulling ring chains in the following locations:

  (1) adjacent to the door to the furnace room;

  (2) near the emergency shower in room B-4;

  (3) at the concrete pillar across from the basement woodworking shop; and

  (4) at the concrete pillar across from the dumbwaiter located in the northeast end of the basement. See Fig. 2.3.

  These areas are located in the east end of the basement. Once activated, the alarm will continue to ring until the reset button located adjacent to room 107, on the 1st floor, east wing is pushed.

- B8-K and B8-M Alarm. A flashing light, accompanied by a high pitched alarm, is activated by pushing the RED switch in rooms B8-K and B8-M. The system is deactivated and reset by pushing the BLACK button on the bottom of the switch box in these rooms. These labs are located in the west end of the basement. See Fig 2.3.

- Freezer Alarms. Lights are activated on the electrical panel located on the wall between rooms 105 and 107 on the 1st floor, east wing. This is the alarm system for the tissue section freezers.

2.6.3. Familiarization of Personnel with Alarm Sounds

The alarm system will be demonstrated annually. A Safety Committee representative ensures that the alarm drill is conducted.

2.7. Emergency Equipment and Its Location

2.7.1. Safety Showers

Safety showers are provided throughout the hallways and in several laboratories in the west wing of OH-1 at TA-59 and in the laboratory at TA-50. A shower is directly across from room A137 at TA-35. Exact locations are shown in Figs. 2.2.-2.6.

2.7.2. Eyewash Stations

Eyewash stations are located in all chemical laboratories in the east and west wings of OH-1, and in the laboratory at TA-50. Exact locations are shown in Figs. 2.2.-2.6.

2.7.3. Fire Extinguishers

Fire extinguishers are located in the hallways of OH-1 and TA-35 and in the laboratory at TA-50. Exact locations are shown in Figs. 2.2.-2.6.

2.7.4. First Aid Kits

First aid kits are located at TA-50 and in the east and west wings of OH-1 at TA-35 and TA-59. Locations are shown in Figs. 2.2.-2.6.

2.7.5. Chemical Spill Clean-Up Kits

Clean-up kits for acids, caustics, and solvents are located in the east and west hallways and basement of OH-1, in the main laboratory and in the basement near room 118 at TA-50, and in room A133 at TA-35. Each kit contains an instruction manual on how to clean up spills.

2.8. Accounting for Personnel in HSE-9

The attendance list of personnel will be used for personnel accountability. The group secretary at TA-59 will bring the attendance list to all building evacuations and drills. All employees should inform their section leader each time they leave the building. HSE-9 personnel located at TA-50 and TA-35 will follow the emergency procedures for those areas.

2.9. Building Evacuation

2.9.1. Test Evacuation

A test evacuation will be held annually to familiarize HSE-9 personnel with evacuation procedures. All practice evacuations will have advance notice.

2.9.2. General Evacuation Guidelines

- Employee participation in drills is mandatory as proper procedures are shown and any flaws in the evacuation plan become apparent.

- Close and lock safes, security file cabinets, etc. However, if you are away from the office, exit immediately; do not return to your office to do this task.

- Adjust operations to a safe stand-down status. The stand-down procedure should be outlined in the operating instructions for each system.

- Use the closest exit and leave the work area as rapidly as possible. Know the location of a second exit in case your primary exit is blocked. (Occupants of rooms 101-104, in the east wing of OH-1, should exit through the east door and ignore that it is wired to an alarm.)

- Proceed without socializing to the assembly area. See Fig. 3.1. in Section 3. Do not loiter. Escort visitors and contract personnel out of the building. Evacuation of OH-1 and TA50 should be completed in less than two minutes.

- Do not take along coffee or drinks. Spills in crowded hallways lead to more problems.

- Do not run. A fast walk covers as much ground as a jog or slow run, and you will have better control of your footing.

- Do not re-enter the building once you have exited. Proceed to the assembly point. Do not go through a building as a short cut.

- Muster in your proper area. See Fig 3.1. in Section 3. Take roll by name using a group roster. Move upwind if directed to do so.

- Stay in the assembly area after you have been accounted for. Further information and instructions will be given from this area.

- Stay calm and help those around you to stay calm. Do not spread rumors.

- Do not light up a cigarette. There may be a broken gas main or flammable vapors in the area.

- Watch out for emergency vehicles. They have right-of-way.

- Do not return to your work area until advised to do so by the person in charge.

2.10. Review of Group Emergency Plan

The emergency plan is reviewed and updated yearly by the HSE-9 Safety Committee.

2.11. HSE-9 Responsibilities within the HSE-DO Emergency Plan

HSE-9 responds to emergencies requiring chemical analysis, such as spills or potential chemical or radionuclide exposures, and has the following responsibilities:

- providing organic, inorganic, stable element, and radiochemical analyses in support of environmental monitoring, environmental compliance, industrial hygiene, health physics, and waste management,

- developing new, rapid-response analysis techniques that provide immediate estimates of the magnitude of an emergency,

- providing expert advice on sampling techniques,

- advising the HSE Division Leader on Health and Environmental Chemistry Group readiness to handle emergency situations,
- training personnel on rapid analysis techniques, and
- maintaining complete records on all aspects of analytical work.

Fig. 2.2. TA-59, Bldg. OH-1, 1st Floor

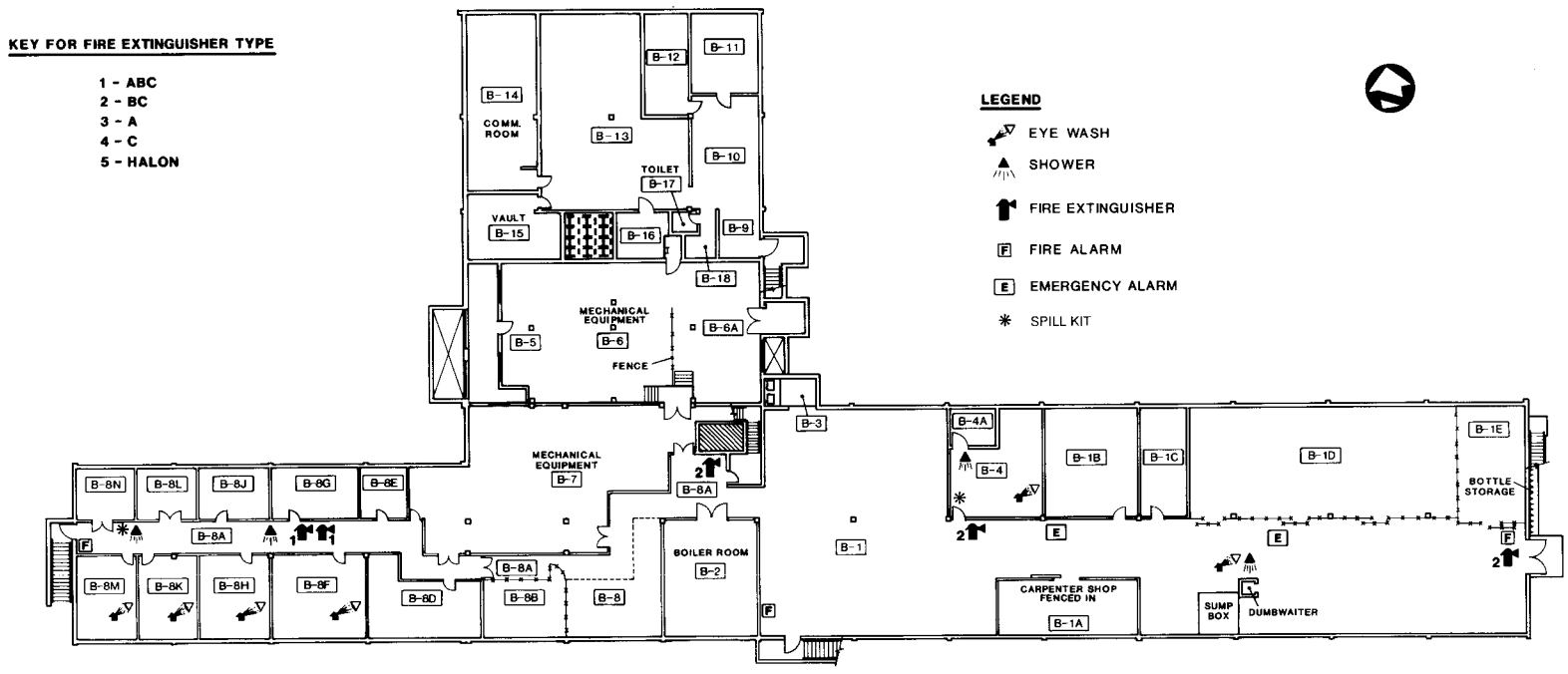

Fig. 2.3. TA-59, Bldg. OH-1, Basement

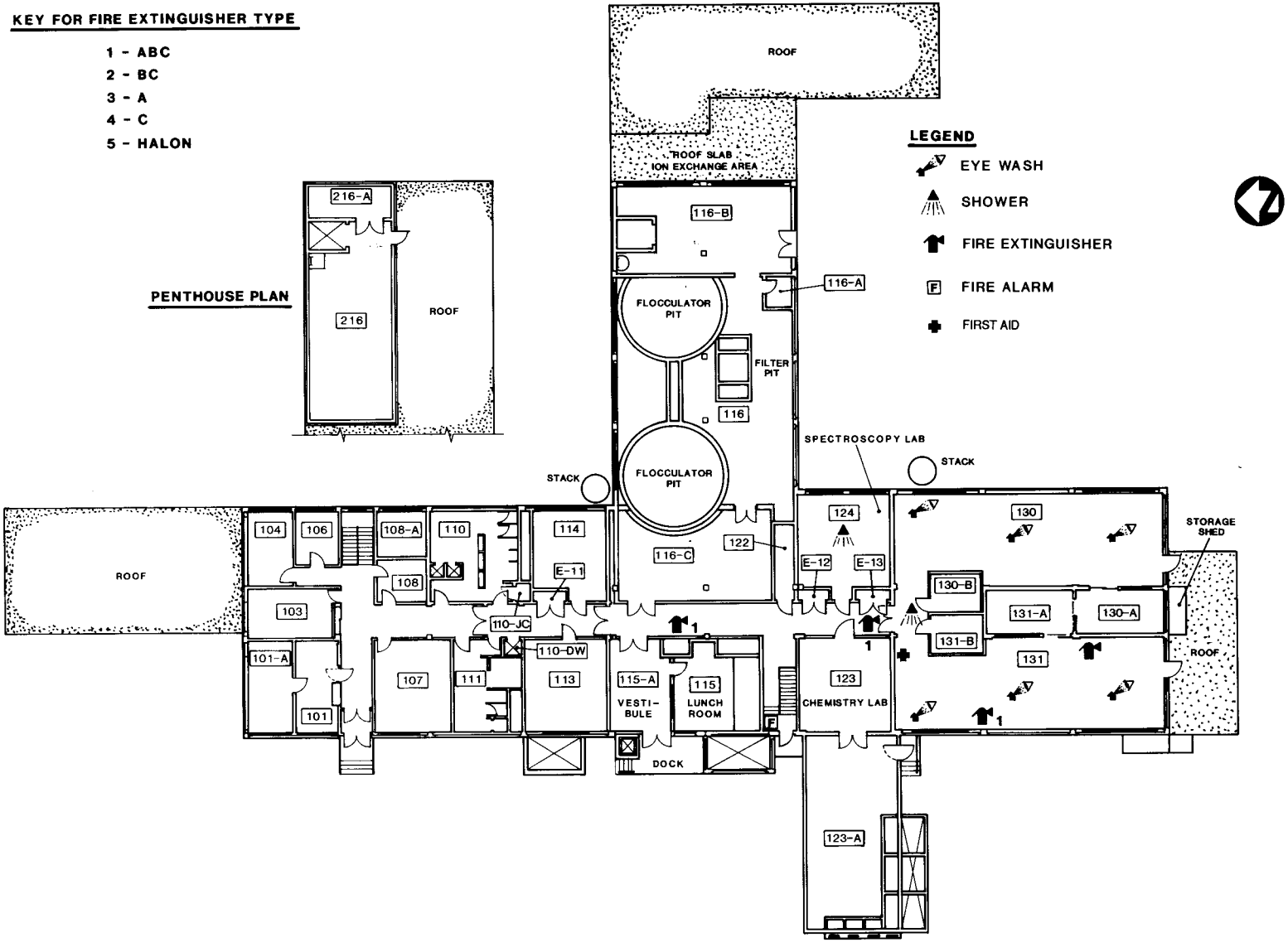

Fig. 2.4. TA-50, Bldg. LD-1, 1st Floor

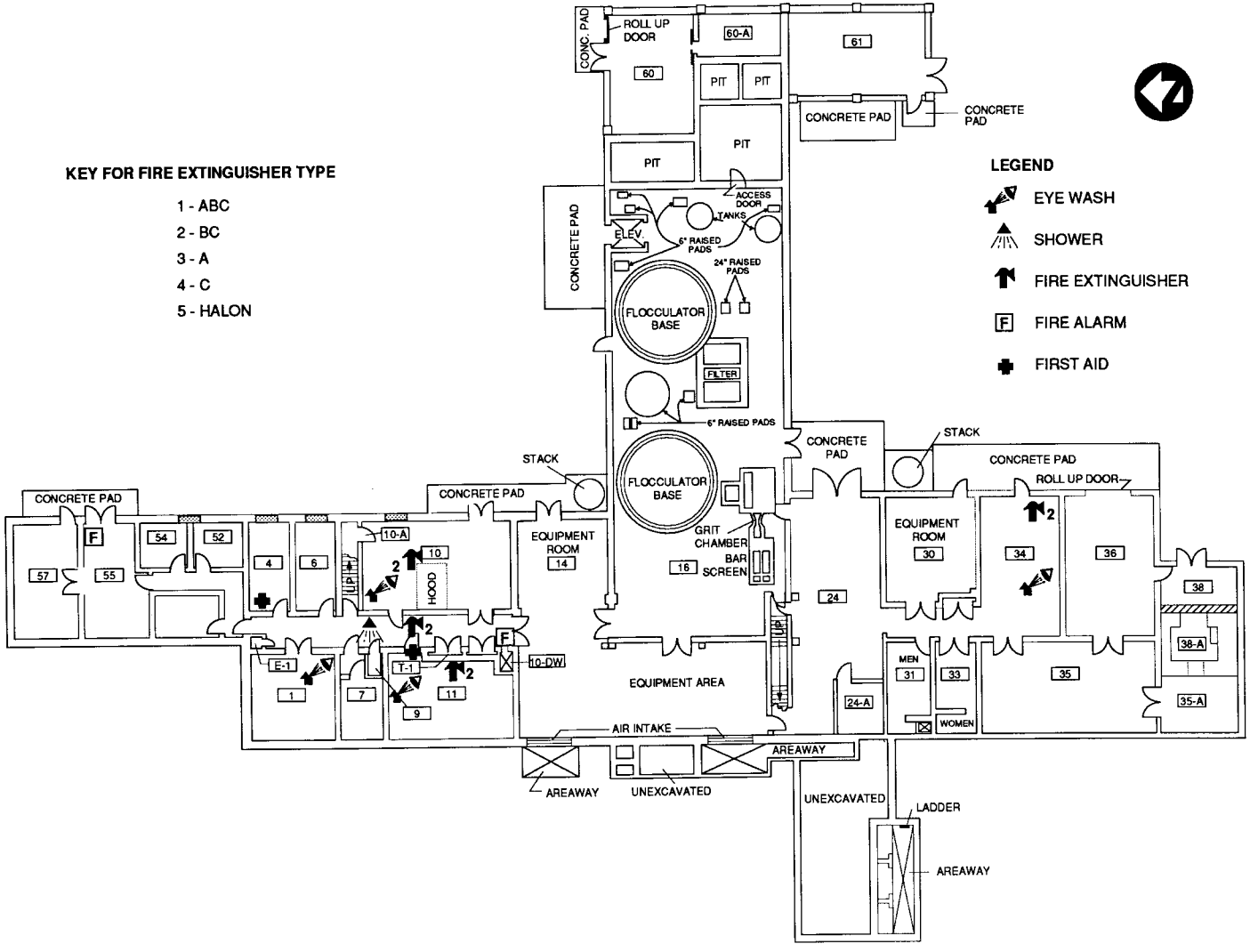

Fig. 2.5. TA-50, Bldg. LD-1, Basement

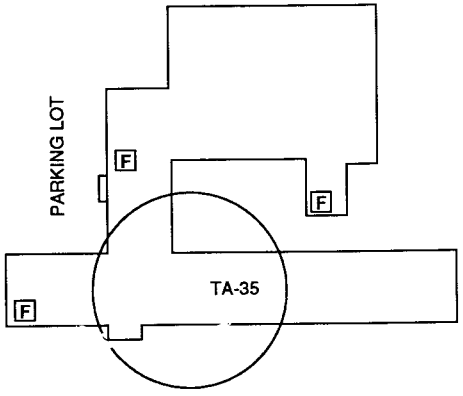

LEGEND

- EYE WASH
- SHOWER
- FIRE EXTINGUISHER
- FIRE ALARM
- FIRST AID

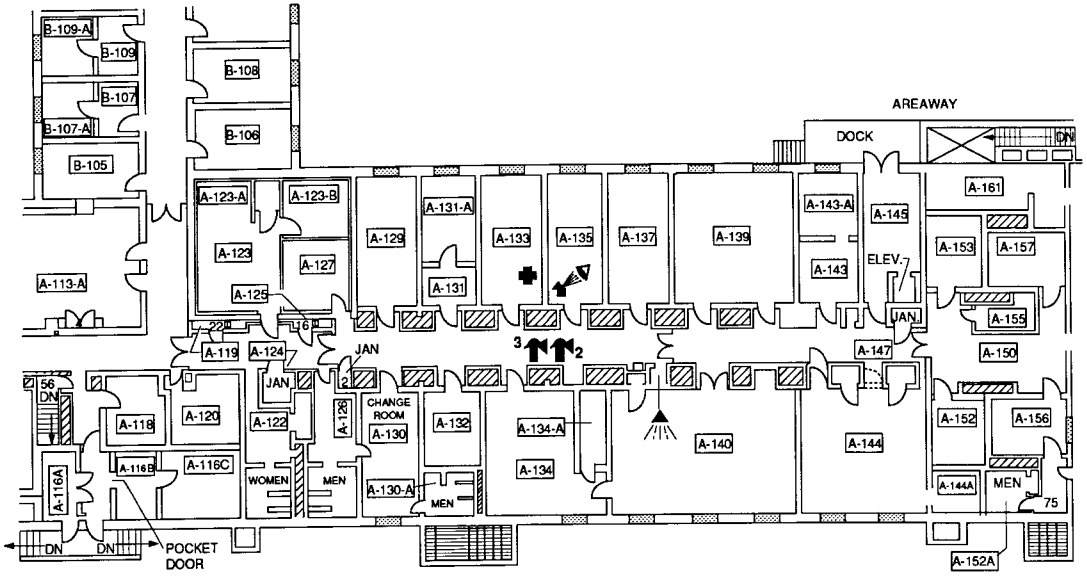

KEY FOR FIRE EXTINGUISHER TYPE

1 - ABC
2 - BC
3 - A
4 - C
5 - HALON

Fig. 2.6. TA-35, Bldg. TSL-2

TABLE OF CONTENTS

3. EMERGENCY RESPONSE

3.1. Introduction . . . . . LS 3-3

3.2. Emergency Site Plans for TA-59, TA-50, TA-35, and TA-2 Omega Site . . . . . LS 3-3

3.3. Basic Guidelines for Emergency Response in HSE-9 . . . . . LS 3-3

3.4. Fire Alarm Response . . . . . LS 3-4

3.4.1. Immediate Response . . . . . LS 3-4

3.4.2. General Fire Fighting Procedures . . . . . LS 3-4

3.4.3. Types of Fire Extinguishers . . . . . LS 3-5

3.5. Evacuation Alarm Response . . . . . LS 3-5

3.5.1. Equipment Shutdown for Evacuation . . . . . LS 3-5

3.5.2. Building Evacuation . . . . . LS 3-6

3.5.3. Emergency Control Center . . . . . LS 3-6

3.5.4. Emergency Response Team Action . . . . . LS 3-6

3.6. Emergency Situations . . . . . LS 3-6

3.6.1. Vehicle Accident . . . . . LS 3-6

3.6.2. Toxic Releases . . . . . LS 3-6

3.6.3. Fire and Explosion . . . . . LS 3-7

3.6.4. Natural Disasters . . . . . LS 3-7

3.6.5. Occupational or Industrial Accidents . . . . . LS 3-7

3.6.6. Radioactive Material Incidents . . . . . LS 3-7

3.6.7. Utility Service Failures . . . . . LS 3-8

3.6.8. Medical Illness . . . . . LS 3-8

3.6.9. Terrorist Attack . . . . . LS 3-8

3.6.10. Bomb Threat . . . . . LS 3-8

3.7. Emergency Response after Work Hours . . . . . LS 3-8

3.8. HSE-9 Response within the HSE-Division Emergency Operations Plan . . . . . LS 3-8

3.8.1. Responsibilities . . . . . LS 3-8

3.8.2. Chemical Analyses . . . . . LS 3-9

3.8.3. Personnel Resources . . . . . LS 3-9

3.8.4. Equipment Resources . . . . . LS 3-9

Figures

Fig. 3.1. Building evacuation assembly areas . . . . . LS 3-10

3. EMERGENCY RESPONSE

3.1. Introduction

The Emergency Coordinator should immediately assume command and maintain order by establishing a command post near the center of the action, safely removed from any real danger, and directing the emergency response. In HSE-9, the Group Leader or his designee is the Emergency Coordinator. Further responsibility is shown in the chain of command shown in Fig. 2.1. of Section 2.

Other supervisory personnel, both operational and support (i.e., HSE-1, HSE-3, HSE-5, etc.) will work closely with the person in charge to provide advice and to assure that all decisions are carried out. The person in charge will coordinate all activities, will know what has already been done and what needs to be done, and will make any final decisions.

3.2. Emergency Site Plans for TA-59, TA-50, TA-35, and TA-2 Omega Site

Group HSE-9 is located at TA-59, TA-50, and TA-35. The emergency site plans for each of these technical areas are reproduced in full in Appendix I of this manual. The technical area site plans are designed to provide maximum feasible protection of Laboratory personnel, the general public, and property should an emergency occur at these sites.

A few HSE-9 employees perform irradiation work at the Omega West Reactor. The emergency procedures for that site are included in Appendix I for HSE-9 personnel who work at that facility.

3.3. Basic Guidelines for Emergency Response in HSE-9

3.3.1. Be familiar with the work area, the types of work in progress, and the location of potentially hazardous materials. Know the emergency plans and the emergency equipment.

3.3.2. When an emergency arises, remain calm and think about actions to take. While rapid and effective action is frequently imperative, hasty action before consideration can compound difficulties.

3.3.3. The first concern is for personnel. Personnel will be evacuated to an area where known hazards are low. Obtain medical assistance for any injured personnel.

3.3.4. Re-entry should not be attempted until the situation has been carefully evaluated.

3.3.5. In extreme cases, entry into an area may be necessary to remove injured personnel from life-threatening conditions. If any possibility of neck or back injury exists, move the victim *only* in life-threatening situations.

3.3.6. All emergencies should be reported to appropriate HSE-9 supervision. After normal working hours, all emergencies should be reported to the

Group Leader. For general assistance involving all types of emergency situations, call the Laboratory emergency number 911. Indicate to which entrance to the building (main, west, south, east) the response team should report. The HSE Division emergency response number is 7-7878.

3.3.7. As public dissemination of information about an emergency can cause unnecessary alarm, please refer all inquiries to the Public Information Office at 7-7000.

3.4. Fire Alarm Response

3.4.1. Immediate Response

Locate and extinguish all fires as rapidly as possible before they get out of control. If a person finds a fire in their area, he or she should immediately alert the Fire Department by activating a fire alarm and/or by calling 911. The person calling should give the Fire Department the vital information (your name, where, what, how big) and stay on the line until the Fire Department breaks the connection.

When a fire alarm sounds, all personnel in the alarmed area should evacuate the building, report to the assigned muster area, and await further instructions.

When the Fire Department arrives following a fire alarm, they automatically assume responsibility for the fire fighting. Supervisory personnel will work closely with the Fire Department to advise them of facility considerations.

3.4.2. General Fire Fighting Procedures

Fire-alarm pull boxes are located at EXIT doors at TA-50, TA-35, and in OH-1 at all EXIT doors with the exception of the south EXIT through room 110 in OH-1. See Figs. 2.2. through 2.6.

If a fire is found, evaluate it. An attempt to extinguish the fire may be made only if it can be done safely. Select the proper fire extinquisher for the type of fire being controlled (see 3.4.3.). If you cannot put out the fire with a single extinguisher, immediately summon the fire department.

As a general rule, cool the area immediately surrounding the fire with a fire extinguisher to prevent the flames from spreading. The base of the blaze should then be extinguished. Remove flammable materials from around the fire and unplug any electrical equipment in the area.

Abandon the fire if it cannot be safely extinguished because of chemical or other considerations and leave the fire fighting to professional fire fighters.

If your clothing should catch fire, smother the flames promptly with a laboratory coat or lie down on the floor and roll. If you are close to a safety shower, use the shower. *Do not run.* Running will fan the flames.

If you use a fire extinguisher, call ENG-10 at 7-2295 to recharge the fire extinguisher. *Do not rehang a used fire extinguisher.*

3.4.3. Types of Fire Extinguishers

Fire extinguishers are located in all corridors of OH-1 and in the laboratory at TA-50. Most fire extinguishers are Type BC for flammable liquids and/or electrical fire. Each extinguisher is labeled on the canister for easy identification. Locate the fire extinguishers near your work area and note which type they are.

The fire extinguishers used in HSE-9 are as follows:

CLASS	WHERE USED
A	Ordinary combustibles, such as paper, wood, upholstery, drapes.
B	Flammable liquids, such as fuel oil, gasoline, paint, grease, solvents.
C	Electrical equipment, wiring, fuse boxes, conductors.
D	Metals, such as magnesium, aluminum, zinc, lithium, sodium, potassium, plutonium, or metal hydrides.

3.5. Evacuation Alarm Response

3.5.1. Equipment Shutdown for Evacuation

- Do not remain to shut down equipment when immediate building evacuation has been called for.
- Shut down equipment such as the ICPMS, ICPAES, and AAS.
- Shut off all gases (e.g., nitrous oxide torch of FAA) except inert purging gases.
- Shut down extraction apparatus and turn off hot plates.
- Power down computer-controlled robots.
- Turn off all high voltage equipment, computers, counting systems, and other equipment that might cause injury to fire fighters and emergency personnel or might be damaged by power failure or unattended operation.
- Shut down analyses using toxic or radioactive materials.

- Shut office and laboratory doors.

3.5.2. Building Evacuation

Immediately evacuate the area using the most direct route to the assembly (muster) areas shown in Fig. 3.1.

All personnel should remain at their assembly area until dismissed by the Emergency Coordinator. The group secretary will provide the Emergency Coordinator with an attendance list to be used for personnel accountability.

3.5.3. Emergency Control Center

Following evacuation, a control center will be established. The Emergency Coordinator will direct all emergency response from this center. The HSE Division Office maintains an Emergency Operations Center (EOC) in building OH-3, room 313. An alternate location is also available in the OH-1 Meterology Laboratory. The Los Alamos National Laboratory Emergency Operations Center can also be used when circumstances warrant its use.

3.5.4. Emergency Response Team Action

During an emergency evacuation, Emergency Response Team members should proceed immediately to the assembly area to be counted and then to the emergency control center for additional instructions.

3.6. Emergency Situations

The principle areas of concern for HSE-9 are the chemical laboratories. Building OH-1 also contains the Laboratory's Emergency Operations Center, a potential target for sabotage and terrorism.

3.6.1. Vehicle Accident

In case of a vehicle accident call 911. If there is threat of fire, call 911 before attempting to extinguish the fire. For other emergency procedures, such as rescuing the personnel, notify HSE-DO at 7-7878.

3.6.2. Toxic Releases

In the event of serious release of toxic materials to the environment, immediately evacuate the area. Call 911 and HSE-DO at 7-7878. In the event of chemical exposure call HSE-5 at 7-5231. In the event of a chemical spill call HSE-7 at 7-4301. Place individuals at a sufficient number of safe locations to control entry into the area. Immediately notify the Emergency Coordinator, then your section supervisor.

The Emergency Response Team will provide first aid and call for medical assistance as needed. Place personnel near the main entrance to guide

emergency personnel to exact locations. The cleanup of hazardous materials requires special procedures and is directed by HSE-5 and HSE-7.

3.6.3. Fire and Explosion

If the Fire Department is summoned by pulling a fire alarm box, call the dispatcher at 911 to provide additional information on the location and nature of the alarm. Then call HSE-DO at 7-7878.

In the case of explosion, immediately evacuate the area and call 911. Depending on the severity of the situation, attempt to rescue trapped personnel. The Emergency Response Team will administer first aid to the injured. Re-entry into the area for rescue must be determined by the extent of structural damage and any associated fire.

Place personnel near the main parking lot entrance to guide fire fighters and ambulances to the location of the fire or any injuries.

3.6.4. Natural Disasters

The primary result of natural disasters, such as heavy winter snow storms or forest fires, would be structural damage to buildings and equipment. In these cases, personnel should be evacuated from the damaged structure and electrical power and equipment shut down to minimize the danger of fire. Call 911 and HSE-DO at 7-7878.

3.6.5. Occupational or Industrial Accidents

In the case of an accident injuring personnel, emergency first aid should be administered by the Emergency Response Team. If the injuries are extensive, an ambulance should be summoned by calling 911. Notify HSE-DO at 7-7878. Place personnel near the main parking lot entrance to guide the ambulance to the location of any injured personnel. All injuries to personnel must be reported to the Occupational Medicine Group (HSE-2) at 7-7251.

3.6.6. Radioactive Material Incidents

The possibility of radiological incidents arising from HSE-9 laboratory operations at TA-35 and TA-59 is small. There is a higher chance of this type of incident happening at TA-50.

If it is suspected that radioactive materials have been released into any area, immediately call 7-7137. Health physics personnel from HSE-1 will respond and they will determine the level of radiation. Operations personnel should determine the exact nature of the incident.

Personnel should be evacuated from the immediate area to a nearby designated area until they have been checked by health physics personnel for contamination. Minimize the spread of contamination by establishing exclusion zones around the area. Call HSE-1 at 7-5296 to monitor the area

and to determine the level and extent of the contamination. A plan for decontamination can then be formulated.

3.6.7. Utility Service Failures

Shut down all operations requiring mechanical ventilation. Shut down electrical equipment such as computers, radiological counting equipment, mass spectrometers, and any other equipment that might cause injury to personnel or be damaged by unattended operation or power surges.

3.6.8. Medical Illness

In the event of an illness or serious injury, the Emergency Response Team should immediately administer first aid. Summon additional help by calling 911. Station someone at the main entrance of the site to direct the ambulance when it arrives.

3.6.9. Terrorist Attack

Call 911. The Protective Force Duty Officer must be notified, the site buildings secured, and the staff notified of the situation. Stay away from windows. Physical security will be provided by the Protective Force. Notify HSE-DO at 7-7878.

3.6.10. Bomb Threat

Use the checklist on page one of the Laboratory Telephone Directory. The page is also reproduced in the front of this manual. Call 911 and HSE-DO at 7-7878.

3.7. Emergency Response after Work Hours

When emergencies occur after normal working hours, the primary concerns are (1) assuring that all persons are properly evacuated from potentially hazardous areas and (2) contacting the appropriate HSE-9 supervisory personnel to handle the situation.

3.8. HSE-9 Response within the HSE-Division Emergency Operations Plan

3.8.1. Responsibilities

In case of an emergency, the Health and Environmental Chemistry Group will

- advise on types of samples to be taken,
- analyze for chemicals in the environment, in the workplace, or in waste samples, and
- interpret results.

In the HSE-Division Emergency Operations Plan, HSE-9 is listed as potentially being called for analytical services for the following incidents:

- hazardous solid or liquid releases to the environment,
- radiation/radioactive material incidents,
- toxic material (nonradioactive) release to the atmosphere,
- toxic or potentially toxic material release (nonradioactive) in buildings,
- vehicle acidents and,
- handling of deceased persons.

3.8.2. Chemical Analyses

Chemical analysis of samples will be conducted as quickly as possible to provide data for management decisions. The time required to obtain data varies greatly, depending on the type of analyte and matrix and on the sensitivity and precision required. Immediate estimates are often acceptable, but are usually followed with more precise results. Identification of unknowns usually requires more effort and time than quantification of known compounds or elements.

3.8.3. Personnel Resources

Group HSE-9 has chemistry staff members with expertise in the following areas:

- Organic Chemistry - 7 staff members
- Inorganic Chemistry - 6 staff members
- Radiochemistry - 6 staff members

In addition 19 full-time and 5 part-time HSE-9 technicians have experience in these areas.

3.8.4. Equipment Resources

Table I. lists HSE-9 instruments available for emergency use.

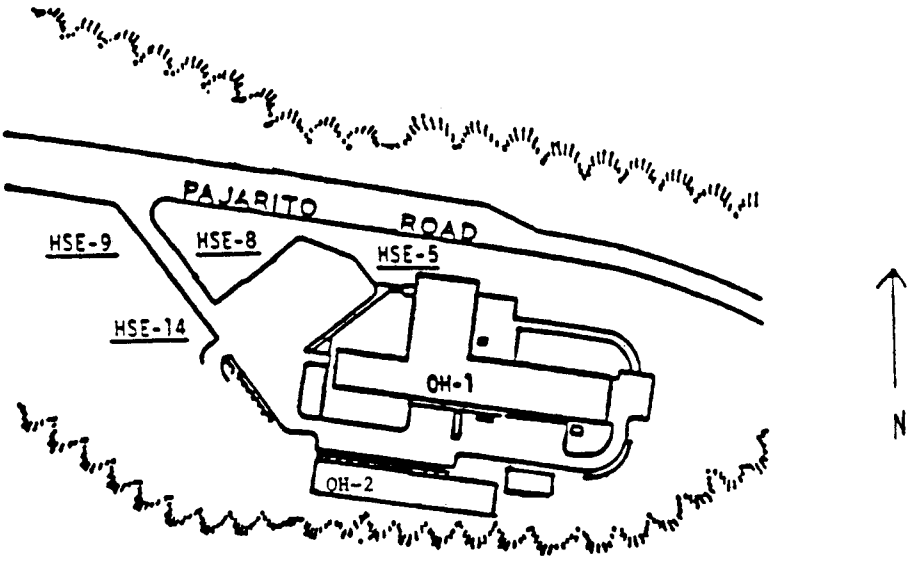

OH-1 Evacuation Assembly Area

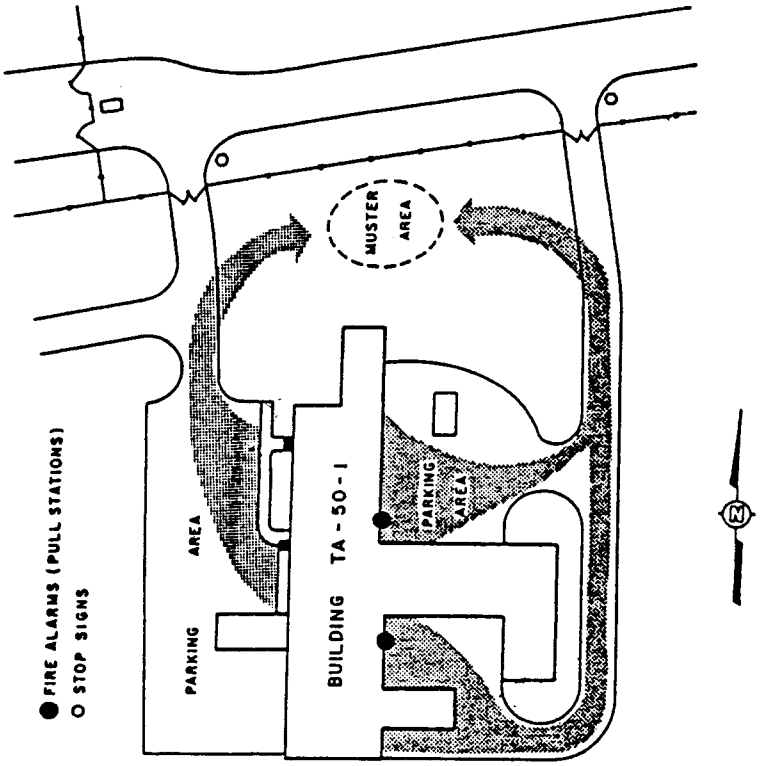

TA-50 Evacuation Assembly Area

Fig. 3.1. Building evacuation assembly areas.

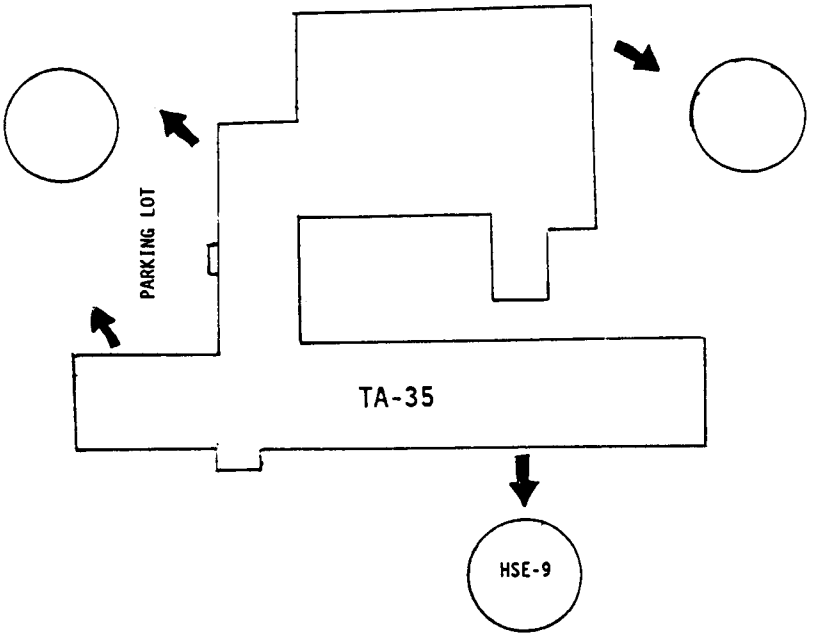

TA-35 Evacuation Assembly Area

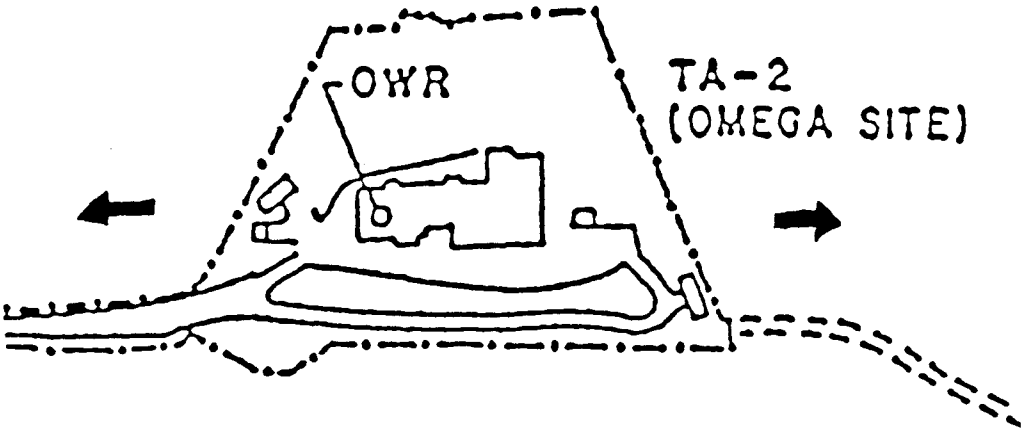

TA-2 Evacuation Assembly Area

Fig. 3.1. Building evacuation assembly areas (cont).

TABLE I. HSE-9 INSTRUMENTS AVAILABLE FOR EMERGENCY USE

Instrument	Number	Common Uses	Comments
Organic Analysis:			
• Gas chromatograph/ mass spectrometer (GC/MS)	5	Identification and quantification of unknown organics	Data system and extensive reference library
• Gas chromatographs	4	Quantitative analysis for most organics 500 amu or less in molecular weight	Various general and specific detectors
• Infrared spectrometers	2	Identification and quantitation of unknown organics	FTIR has a data system with reference library
• Ultraviolet/visible spectrometers	1	Identification and quantification of a variety of organic compounds	
• High performance liquid chromatograph	1	Quantitation of less volatile organics or derivatives	
Inorganic Analysis:			
• Atomic absorption spectrometers	4	Quantitative analysis for many elements	One element at a time; sample preparation required
• Omega West reactor	1	Neutron activation analysis for many elements	Used for uranium in urine, air, water, etc.
• Mercury analyzers	3	Mercury	
• Ion Chromatographs	3	Ions; acid or inorganic mists	
• Ultraviolet/visible spectrometers and colorimetric auto-analyzer	4	Quantitative analyses for selected aqueous ions	

TABLE I. (cont)

Instrument	Number	Common Uses	Comments
Inorganic Analysis (cont):			
• ICPMS	2	Quantitative analyses for many elements	Simultaneous multi-element
• ICPES	1	Quantitative analysis for many elements	Single element
Radiochemical Analysis:			
• Alpha spectrometer systems (112 detectors)	7	Pu, Am, U and Th in a variety of matrices	Considerable sample preparation required
• Liquid scintillation spectrometers	3	Tritium	
• Gamma spectrometers	6	Neutron activation analyses for a variety of elements	Facilities also available at Omega West Reactor
• Alpha, beta, and gamma counters	Many	Direct sample	

TABLE OF CONTENTS

4. PERSONNEL SAFETY

4.1. Introduction . . . . . LS 4-3

4.2. Responsibility for Safety . . . . . LS 4-3

4.2.1. Individual Employee Responsibilities . . . . . LS 4-3

4.2.2. Supervisory Personnel Responsibilities . . . . . LS 4-5

4.2.3. Group Leader Responsibilities . . . . . LS 4-6

4.2.4. External Support Organizations . . . . . LS 4-6

4.2.5. Accident Reporting . . . . . LS 4-7

4.3. Personal Protective Equipment . . . . . LS 4-7

4.3.1. Eye Protection . . . . . LS 4-7

4.3.2. Hand Protection . . . . . LS 4-8

4.3.3. Foot Protection . . . . . LS 4-8

4.3.4. Protective Clothing . . . . . LS 4-8

4.3.5. Respiratory Protection . . . . . LS 4-9

4.3.6. Radiation Monitoring . . . . . LS 4-9

4.4. Substance Abuse . . . . . LS 4-9

4.4.1. Policy . . . . . LS 4-9

4.4.2. Employee Assistance . . . . . LS 4-10

4.4.3. Fitness for Duty . . . . . LS 4-10

4.4.4. Conviction for Substance Abuse Violations . . . . . LS 4-10

4.4.5. Policy Violations . . . . . LS 4-10

4.5. Facilities and Equipment Management . . . . . LS 4-11

4.5.1. Class A Facilities and Equipment . . . . . LS 4-11

4.5.2. Class B Facilities and Equipment . . . . . LS 4-11

4.5.3. Government Vehicles . . . . . LS 4-11

4.5.3.1. Seat Belts . . . . . LS 4-11

4.5.3.2. Two-Wheel Vehicles . . . . . LS 4-12

4.5.3.3. Vehicle Accident . . . . . LS 4-12

4.5.3.4. Vehicle Inspection . . . . . LS 4-12

4.6. Risk Management . . . . . LS 4-12

4.7. Accountability . . . . . LS 4-13

4.8. Employee Safety Training . . . . . LS 4-13

4.8.1. Job-Specific Training . . . . . LS 4-14

4.8.2. Training New/Transferred Employees . . . . . LS 4-15

4.8.3. Non-Job-Specific Training . . . . . LS 4-15

4.8.4. Supervisory Training . . . . . LS 4-16

4. PERSONNEL SAFETY

4.1. Introduction

It is the intent of Los Alamos National Laboratory, the Health Safety and Environment Division, and the Health and Environmental Chemistry Group (HSE-9) to provide a workplace that is reasonably free of hazards. This goal can be reached only through the cooperation of the Laboratory and its employees. The Laboratory shall control and limit known hazards to an acceptable level. Employees have the professional, moral, and legal responsibility to be as familiar as possible with the hazards of the workplace, to follow all rules and regulations that apply, and to bring to the attention of their supervisor any situation or condition they feel is hazardous to the health and safety of employees.

Many technical undertakings can be hazardous when performed without adequate knowledge or understanding. Accidents can be minimized by emphasizing responsibility, knowledge, and safety at both the individual and group levels.

Although it is not possible to define generalized safety practices in a research and service environment, all employees must be observant and identify new hazards. As these hazards are identified, they must be codified into new safety regulations. Work must be undertaken with forethought. We must become aware of our fellow workers, particularly those with less experience, to see that they develop safe working habits and are not injured through ignorance of the hazards involved with a particular operation.

Supervisors must be sure that employees use safe procedures and techniques. Administrators are ultimately responsible for safe operations in HSE-9. These supervisory and administrative responsibilities do not lessen the employee's obligation to work safely.

4.2. Responsibility for Safety

4.2.1. Individual Employee Responsibilities

In conducting their activities, employees must accept and exercise certain health and safety responsibilities. These responsibilities, taken from the Los Alamos Administrative Manual, Section 700, are listed below. Failure to comply with health and safety regulations may result in disciplinary action, up to and including termination.

- Conduct only those activities that your supervisors have approved, and use Laboratory facilities, equipment, and tools for the purposes for which they were designed.

- Adhere to any standard operating procedures associated with your work assignments.

- Observe health and safety requirements, instructions, signs, posters, and warning signals, as applicable to your work place.

- Follow any health and safety instructions from your supervisors.

- Know the emergency plans and procedures established for your work areas. (HSE-9 is located in Building OH-1 at TA-59, in Building 1 at TA-50, and in Building TSL-2 at TA-35).

- Become familiar with potential hazards associated with your operations and work areas.

- Use the personal protective equipment provided or recommended by your supervisor for the tasks or operations being performed.

- Report all unsafe conditions and potentially hazardous incidents, including but not limited to the following, as soon as possible:

  (1) Any malfunctioning equipment or devices. Post signs until such time as the equipment or devices are repaired or removed from service.

  (2) Any condition or act believed to be a threat to the health and safety of employees.

  (3) All injuries, no matter how small, and any incident that causes damage.

  (4) Any incident that could cause damage to property or facilities or that could result in bodily injury.

- Participate in bioassay and dosimetry monitoring programs when appropriate.

In addition, HSE-9 employees have the following responsibilities:

- Study, learn, and understand procedures and policies set forth in the HSE-9 Safety Manual, in section and group safety meetings, and in other pertinent Laboratory publications. The intent is to develop and practice a safety attitude and awareness. Ask your supervisors or co-workers if you have any questions regarding any aspect of safety in HSE-9.

- Wear laboratory coats when working in the laboratory.

- Safety glasses should be worn at all times when working in the laboratory and worn in other locations when warranted.

- Wear radiation dosimeters if deemed necessary.

- Learn the locations in your areas for safety-related items, such as fire extinguishers, fire pull-boxes, eye washes, and showers. Learn the procedures to follow in case of emergencies.

- Do not bring food, drinks, tobacco, or other materials for personal consumption into laboratory working areas. Food storage in refrigerators not specifically approved for food is prohibited.

- Know your physical limitations and do not exceed them. Ask for help in lifting or moving heavy objects.

- Good housekeeping practices contribute to a safe working environment. Laboratories must be kept neat and clean.

4.2.2. Supervisory Personnel Responsibilities

The implementation and management of health and safety functions are line responsibilities. Supervisory personnel must follow all responsibilities outlined in Section 4.2.1. and must ensure that the above individual responsibilities are discharged by personnel under their supervision. Supervisors have the following additional responsibilities.

- Set the level of awareness and safety-conscious behavior expected of their employees through supervisory interest, involvement, and attitude.

- Teach employees safety techniques and approved safety practices.

- Verify that standard operating procedures are written and kept current.

- Furnish job and safety information to HSE-DO concerning individuals and activities in their areas.

- Contact the approving authority whenever major changes in operational procedures, new techniques, alterations in the building, or new operations are anticipated.

- Eliminate unsafe operating conditions and practices.

- Conduct only those operations and activities that can be safely controlled.

- Verify that employees understand and implement policy, rules, regulations, and procedures.

- Terminate any activity in their area of responsibility that is unsafe or has excessive risk.

- Take time to actively listen to employees who are preoccupied because of personal problems, and when necessary, assign alternate work when the health and safety of employees is being jeopardized.

4.2.3. Group Leader Responsibilities

Although the details of implementing various functions of the health and safety program can be delegated, the group leader has the following basic responsibilities.

- Outline management's goals, objectives, and priorities regarding an effective health and safety program.
- Ensure that group operations have a complete and effective safety program.
- Demonstrate a positive attitude and a commitment to health and safety.
- Document the entire program with responsibilities, authority, and lines of communication clearly stated.
- Participate actively in the safety committee.
- Provide the appropriate level of comprehensive and job-specific training to each employee.
- Maintain a record system that includes records of safety training, inspections, safety meetings, equipment maintenance, SOPs, SWPs, and emergency drills.

4.2.4. External Support Organizations

Safety support services are available from the Health, Safety, and Environment Division. Group health and safety representatives are encouraged to use the following support services as needed. The telephone numbers for these organizations are listed, and the services they offer are briefly described below.

- The health physics staff (HSE-1, 7-5296) provides many services, including advice and monitoring for the safe handling of radioactive materials and the safe operation of radiation-generating equipment.
- The Occupational Medicine Group (HSE-2, 7-7251) provides first-aid treatment of minor injuries and illnesses and assistance in the diagnosis and control of occupational illness.
- The Safety Group (HSE-3, 7-4644) consults in safety matters, accident investigations, and health and safety training, and also assists in developing standard operating procedures.
- The Industrial Hygiene Group (HSE-5, 7-5231) monitors workplaces for toxic materials, recommends control measures, and advises on the use of personal protective equipment, issues concerning hazardous substances and agents, and standard operating procedures.

- The Criticality Safety Group (HSE-6, 7-4789) provides support regarding nuclear criticality safety.

- The Waste Management Group (HSE-7, 7-4301) provides advice, services, and facilities for the disposal of hazardous and radioactive materials.

- The Environmental Protection Group (HSE-8, 7-5021) provides climatological and meteorological data and observation, as requested, and sampling of environmental pollutants.

- Our group, Health and Environmental Chemistry (HSE-9, 7-3269), conducts an ongoing program of chemical measurements in support of both monitoring and research programs within HSE Division and, where appropriate, the Laboratory. These chemical measurements are monitored by a quality control program with National Bureau of Standards traceability where possible.

4.2.5. Accident Reporting

All accidents should be reported. Accidents causing injury should be reported to your section leader and group leader even if the injury appears insignificant at the time.

4.3. Personal Protective Equipment

A large variety of personal protective equipment is available to the employee, either from stock or by special order. All employees are to be familiar with what is available, and how, when, and why to use it.

4.3.1. Eye Protection

Eye protection is of exceptional importance. *Employees wearing contact lenses should inform their supervisors that they wear contacts.* This information could be very important in emergency situations. Workers must always wear suitable eye protection when they are working in a laboratory. All visitors in a laboratory where work is being performed must wear safety glasses regardless of the duration of their visit. Visitor safety glasses are available from dispensers located in hallways outside our laboratories.

The only exception to the above rules is that eye protection is not necessary when working at a desk when no laboratory work is being performed in the immediate vicinity. The term experimental work includes, but is not limited to, using hot plates and instruments that are operating unattended.

Contact lenses are strongly discouraged and are never to be considered as eye protection. They do not protect the eye from contact with flying dust or droplets; they can create visual problems by sudden displacement of the lenses; they tend to trap and concentrate fumes and droplets between the lens and the eye; they can be difficult to remove under stress conditions

when something gets into the eye and delay removal of the foreign material; and they retard or inhibit the natural eye fluids from flushing contaminants from the eye.

Eye glasses with side shields provide more protection than regular eye glasses. Various types of face shields are also available and should be worn when performing especially hazardous operations, such as mixing acids, or when the potential of an explosion is great. The use of a safety shield in conjunction with eye protection is mandatory whenever there is potential for an explosion.

Nonprescription safety glasses are available from stock. Only glasses meeting the specifications of the American National Standards Institute (ANSI) are acceptable at the Laboratory. Visitors must also wear glasses meeting ANSI standards. A recommended model is the UVEX Ultra-Spec 2000.

Prescription safety glasses will be purchased by the Laboratory with group leader approval. Fill out an Authorization and Invoice for Prescription Safety Glasses, have your group leader sign it, and present the form plus your prescription to the local approved source. These glasses are more impact resistant than those generally purchased by the public and meet the ANSI standard for safety glasses.

If your glasses need repair, have them repaired as soon as possible. Replace scratched lenses because they lose impact resistance.

4.3.2. Hand Protection

Heavy fiberglass gloves must be worn when handling hot objects. Plastic or rubber gloves must be worn when handling hazardous and radioactive chemicals. Penetration of chemicals through gloves is possible. Consult the reports from the Industrial Hygiene Group (HSE-5) glove permeation projects or ask the industrial hygienist assigned to HSE-9 before deciding which glove material is suitable for a given chemical.

4.3.3. Foot Protection

Bare feet, sandals, and open-toed shoes are not permitted while working in the laboratory. Although allowed, soft shoes, such as tennis or jogging shoes, are discouraged. A heavy object dropped on the foot can cause serious injury, and spilled acids can readily penetrate the fabric, causing injury. Regular street shoes are the minimum recommended footware. The Laboratory will provide safety shoes with built-in steel toe caps for employees when necessary. Group leader approval is necessary to obtain these shoes.

4.3.4. Protective Clothing

Laboratory coats or aprons must be worn and must be buttoned when working in the laboratory. While this will minimize the danger of damage

to clothing, it will also prevent contaminating clothing with toxic or otherwise harmful chemicals that may later cause injury either by contact or by contact and subsequent ingestion. TA-50 personnel will wear "Anti-C" laboratory coats. If acid is spilled on clothing, immediately remove the clothing and rinse the affected area for at least 15 minutes with large volumes of water.

4.3.5. Respiratory Protection

Respiratory protection is normally not needed in HSE-9. For emergencies or abnormal circumstances, contact the Industrial Hygiene Group at 7-5231.

4.3.6. Radiation Monitoring

Radiation Protection provides thermal luminescent dosimeters (TLDs) to employees who work in areas in which the potential for external radiation exposure is in excess of 10% of the prescribed annual standards for radiation workers. This standard is three rem per calendar quarter or five rem per year. Consult Administrative Requirements, section three of the Health and Safety Chapter of the Los Alamos Administrative Manual and Appendix III of this manual for more information. TLDs are required at TA-50 and at the Omega West Reactor (TA-2).

The TLD must be worn at all times while at work. They may be worn when leaving for lunch and should be taken home after work hours to avoid recording data while the employee is not present in the work place. Avoid exposing TLDs to television sets, microwaves, etc. The TLD must not be worn when visiting a doctor or dentist during work hours as a nonoccupational exposure will be recorded, particularly if x-rays are taken.

4.4. Substance Abuse

Work assignments in HSE-9 require concentration and judgment. All employees must be drug- and alcohol-free when at work. Your safety and the safety of those around you depend on it.

4.4.1. Policy

The Laboratory is committed to a safe work environment for its employees, to public safety, and to protection of its national security mission. *Substance abuse in the workplace or while on Laboratory business is prohibited and can result in disciplinary action, up to and including termination.*

Substance abuse is defined as the use of controlled substances that are identified in Schedules I through V of the Controlled Substances Act where the use is neither authorized by law nor a valid prescription, or the misuse of a legal substance, including but not limited to alcohol or prescription drugs, that may affect an individual's ability to perform his or her job in a safe and secure manner.

The unauthorized manufacture, distribution, dispensation, possession, or transfer of controlled substances on Laboratory premises also constitutes a violation of this policy; such violation may result in disciplinary action up to and including termination.

The unauthorized use or possession of alcohol or alcoholic beverages on Laboratory premises is prohibited.

Legal drugs, so long as these drugs do not adversely affect the employee's ability to perform required work in a safe and secure manner, may be used on the work site. When such legal drugs are to be used at the work site, *employees must inform their supervisors* either directly or through the Occupational Medicine Group.

4.4.2. Employee Assistance

The Laboratory strongly encourages employees who suffer any form of substance abuse, including alcohol or other drug-related problems, to voluntarily refer themselves for assistance. Laboratory management and all organizations at all levels will provide support for employee assistance, rehabilitation, and counseling.

4.4.3. Fitness for Duty

Supervisors will continue to observe employee performance and on-the-job conduct to detect behavior that could compromise the security, health, or safety of the employee or others. When that observation indicates cause to believe that substance abuse is a factor, *supervisors are to take appropriate management action as directed in the Laboratory policy.*

4.4.4. Convictions for Substance Abuse Violations

Employees are *required*, as a condition of employment, to notify their managers (Group Leaders or above) of any criminal drug statute conviction for a violation no later than five days after such a conviction.

4.4.5. Policy Violations

All employees are expected to cooperate fully with the Laboratory's objective of maintaining a Drug Free Workplace. Failure to do so is deemed to be a violation of Laboratory policy. Accordingly, in the event that an employee violates this policy, refuses to submit to testing as directed, refuses a formal offer of rehabilitation, fails to complete a prescribed rehabilitation program, falsifies any record relative to substance abuse, fails to report an arrest or conviction for substance-abuse violations as required by this policy, or is found to have submitted an adulterated or fraudulent urine sample when tested, such employee will be subject to disciplinary action up to and including termination.

4.5. Facilities and Equipment Management

Laboratory facilities and equipment must be designed, constructed, modified, operated, maintained, and disposed of in accordance with applicable safety standards.

4.5.1. Class A Facilities and Equipment

Laboratory Class A facilities and equipment comprise the land and all permanent or substantial objects affixed to it (for example, buildings, fences, elevators, heating systems, plumbing, and trees).

The Facilities Engineering (ENG) Division is responsible for the design, construction, maintenance, operation, and disposal of Class A facilities and equipment. In addition, the line management of each operating group shall conduct reviews, such as surveys, inspections, or design reviews, to verify that these facilities and equipment do not adversely affect the safety of their personnel or the continuity of their operations.

4.5.2. Class B Facilities and Equipment

Laboratory Class B facilities and equipment are generally movable items purchased by an operating group for use in a particular operation or experiment (for example, glove boxes and vacuum pumps) or for everyday staff use (for example, microwave ovens and refrigerators).

The line management of each operating group to which the systems are assigned is responsible for the design, construction, maintenance, operation, and disposal of Class B facilities and equipment. They are responsible for conducting reviews, such as surveys or inspections, to verify that these facilities and equipment do not adversely affect the safety of their personnel or the continuity of their operations.

4.5.3. Government Vehicles

An official vehicle is any vehicle used for official business, including government-owned vehicles, taxis, rental vehicles, and personal automobiles.

4.5.3.1. Seat Belts

Administrative Requirement 12-2 of the Laboratory Health and Safety Manual specifies the need for seat belt use at the Laboratory. *Laboratory employees must wear seat belts, if provided, when driving or riding in any motor vehicle on official business.* Laboratory drivers must not start a vehicle until all passengers have fastened their seat belts. Supervisors must ensure that their employees are aware of this requirement.

4.5.3.2. Two-Wheel Vehicles

You may use bicycles but not motorcycles for official purposes at the Laboratory. This includes official errands while an employee is on duty, such as, traveling from one Laboratory building to another for obtaining materials, attending meetings, and performing work.

4.5.3.3. Vehicle Accident

Employees must report any accident involving a General Services Administration (GSA)-owned vehicle to GSA by telephone within 24 hours. See AR 1-1 of the Laboratory Health and Safety Manual for additional information. Local police must be notified immediately if the accident involves a personal injury or if it occurs offsite.

4.5.3.4. Vehicle Inspection

HSE-9 policy requires that vehicles assigned to the group be inspected biannually. An HSE-9 employee is assigned this responsibility and the vehicle inspection form is shown on p. LS 4-17.

4.6. Risk Management

Risk management identifies and evaluates deficiencies and hazards that can have adverse consequences in relation to their probability of occurrence and the severity of consequences. Risks are determined to be acceptable or unacceptable. If unacceptable, controls are applied to eliminate or reduce the risk or to lessen the consequences of such risk. Line management must ensure that their administrative controls are adequate to prevent unplanned personnel exposure to unacceptable risks. Effectively applied controls can give maximum protection through proper safety measures.

- Physical controls are actual physical barriers between the hazard and the human. Engineering controls, such as electrical and mechanical interlocks and fume hoods, are types of physical controls designed either to reduce or eliminate the hazard or to lessen the consequences of an accident. Personal protective equipment is considered a physical control. Laboratory coats, safety glasses, and many other items that are available at the Laboratory must be evaluated and worn during each activity associated with unacceptable risks.

- Administrative controls consist mainly of rules and regulations. They include procedures, written policies, training requirements, certification or permit requirements, administrative requirements set forth in the Health and Safety Manual, equipment maintenance or area rules, warning lights, buzzers, signs, and posted regulations.

- At the Laboratory, procedural controls are common and include standard operating procedures (SOPs), special work permits (SWPs), and operating instructions (OIs). These documents outline specific procedures, precautionary measures, or step-by-step instructions for conducting a hazardous or potentially hazardous activity. For example, SOPs identify the hazards involved in a particular activity and the specific measures needed to control those hazards. They include established procedures for performing the operation safely and usually specify training requirements and an emergency plan.

4.7. Accountability

Detailed record keeping provides feedback to measure performance and effectiveness of the control system. HSE-9's record-keeping system includes the following: accident/incident reports and investigations; SOPs and SWPs; training records; safety inspections, surveys, and operational reviews; minutes of any meetings related to safety matters; memoranda establishing responsibility or authority for safety matters; equipment maintenance records; monitoring and dosimetry records; quality assurance documents, safety analysis reports (SARs), and Action Description Memoranda.

Safety inspections and operational reviews in HSE-9 contribute in identifying hazards and deficiencies, determining whether operations are proceeding as intended, and observing whether personnel are complying with policy, regulations, and procedures. Each inspection is documented, and the results or follow-ups are added to health and safety records. Subsequent inspections check the status of prior problems, follow-ups, and corrections.

Group safety meetings and safety inspection reports *must* reflect line managers presence and participation in resolving safety concerns and issues. Management attendance is documented by including their *names and "title"* on the attendance sheets.

4.8. Employee Safety Training

The group leader has established a health and safety training program that includes the periodic assessment of training needs, the development and implementation of training activities, and the documentation of training received by each employee. In HSE-9 training is an integral part of the health and safety program and assists employees in acquiring the knowledge required for safe operations. Safety meetings represent a source of valuable safety information, and employee attendance at the group safety meetings is mandatory.

Training methods include formal training sessions, special meetings, formal reading assignments, and the study of SOPs and safe working procedures. Informal on-the-job training by section leaders is also effective. Feedback mechanisms are an integral part of health and safety training and ensure that the employee understands and retains essential knowledge. Section leaders should encourage question-and-answer sessions or structured discussions for employees to help understanding and provide useful feedback.

The HSE-9 training data base is administered by the Quality Assurance and Data Management Section. Completion of training and attendance at safety meetings is documented in a computerized record-keeping system in accordance with Administrative Requirement 1-4 of the Laboratory Health and Safety Manual. This documentation includes a brief description of the program, the date of each session, the instructor's name if one is present, and the names of attendees.

4.8.1. Job-Specific Training

Job-specific training for HSE-9 personnel is required by the HSE-9 group leader and is provided by the HSE-9 section leaders. Training shall include the following:

- hazards associated with the job,
- use of personal protective equipment,
- emergency response,
- applicable standard operating procedures and special work permits,
- job skills related to safety,
- applicable portions of the Health and Safety Manual, and
- accident/incident reporting procedures.

To aid section leaders with job-specific training, the HSE-9 Training Program in conjunction with the HSE-9 Safety Committee has acquired or will locate and will present the following videotaped material:

- hazard communication,
- general laboratory safety,
- chemical safety,
- radiation safety,
- handling glassware safely,
- using compressed gas cylinders, and
- fire safety and using fire extinguishers.

These materials will be presented at group safety meetings, at which attendance is mandatory. In addition, HSE-9 has a VCR and color television located in room 112 in OH-1 for training use. Section leaders have the responsibility to see that their section members view these materials if they were unable to attend the group safety meeting when the material was initially presented. It is also the section leader's responsibility to arrange

with the Quality Assurance and Data Management Section for new/transferred employees to view these materials.

The HSE-9 training program will continue to develop new training courses as they are needed or requested. A summary of HSE-9 video-taped training materials is listed in Appendix IV.

4.8.2. Training New/Transferred Employees

HSE-9 provides an organized and documented safety program for new or transferred employees within the first two weeks of reassignment or hire. Employees receive information about the topics listed under Section 4.8.1. This orientation is the responsibility of the section leader supervising the new/transferred employee and this training should be documented in the employee's file.

4.8.3. Non-Job-Specific Training

HSE Division regularly offers non-job-specific safety courses, such as radiation protection, first aid, and safety management. Upon request, the Safety Group and other HSE groups provide safety films or personnel to give safety talks for either group safety meetings or training sessions. The first-line supervisor shall arrange for employees to attend the applicable HSE training courses.

HSE-9 management has outlined the following non-job-specific training as mandatory for HSE-9 personnel:

- Electrical Safety (HSE-3)
- Fire Extinguishment (ENG-4)
- Safety Orientation for Managers (HSE-3)
- Basic Radiation Safety (HSE-1)

The following non-job-specific training is recommended by HSE-9 management.

- Cardiopulmonary Resuscitation (HSE-2)
- Introduction to Basic First Aid (HSE-2)

The HSE-9 training program has acquired LABNET which offers a variety of courses.

4.8.4. Supervisory Training

Training for supervisors in both safety functions and supervisory skills important to safety is part of the HSE-9 Health and Safety Program. Supervisors receive training on how to perform the safety functions for which they are responsible, including hazard and deficiency identification, and risk assessment and control. To help management fulfill its training requirements, HSE Division provides a Safety Orientation for Managers class that the HSE-9 group leader requires section leaders to attend.

VEHICLE INSPECTION FORM

Vehicle No.:_____ Date:_____

Make: _____ Inspected by: _____

Model:_____ _____

	Operable or "O.K."	Needs Repair		Operable or "O.K."	Needs Repair
Brakes, foot	_____	_____	High beam	_____	_____
Brakes, park	_____	_____	Low beam	_____	_____
Wipers	_____	_____	Running lights	_____	_____
Washer	_____	_____	Park lights	_____	_____
Mirrors	_____	_____	Turn signals	_____	_____
Seatbelts	_____	_____	Tail lights	_____	_____
Sun visors	_____	_____	Brake lights	_____	_____
Door locks	_____	_____	Back-up lights	_____	_____
Horn	_____	_____	License lights	_____	_____
Tires	_____	_____	Dash lights	_____	_____
Heater & defroster	_____	_____	Emergency flasher	_____	_____
Tailgate (if pick-up)	_____	_____	Windshield	_____	_____

Housekeeping Poor_____ Good_____ Excellent_____

TABLE OF CONTENTS

5. GENERAL LABORATORY PROCEDURES

5.1. Introduction . . . . . LS 5-3

5.2. Safety Rules for Laboratories . . . . . LS 5-3

5.3. Housekeeping . . . . . LS 5-4

5.4. Corridors, Stairs, and Exitways . . . . . LS 5-4

5.5. Bottle Disposal . . . . . LS 5-4

5.6. Scalpel Blade and Hypodermic Needle Disposal . . . . . LS 5-4

5.7. Drying Ovens . . . . . LS 5-5

5.8. Refrigerators . . . . . LS 5-5

5.9. Centrifuges . . . . . LS 5-5

5.10. Fume Hoods . . . . . LS 5-5

5.11. Storage of Chemicals . . . . . LS 5-6

5.12. Container Labels . . . . . LS 5-7

5.13. Compressed Gases . . . . . LS 5-7

5.14. Glassware . . . . . LS 5-9

5.14.1. Preparing Glass Tubing . . . . . LS 5-9

5.14.2. Ground Glass Stoppers . . . . . LS 5-9

5.15. Electrical Safety . . . . . LS 5-9

5.16. Lifting and Carrying . . . . . LS 5-10

5.17. After Hours Work . . . . . LS 5-11

5. GENERAL LABORATORY PROCEDURES

5.1. Introduction

Safe practice requires an open-minded attitude and a knowledgeable awareness of potential hazards. Safety is a collective responsibility and requires the full cooperation of everyone in the laboratory. Most operations can be done safely using common sense. General laboratory procedures are discussed in this section. For further information, consult *Chemical Technicians' Ready Reference Handbook* by G. J. Shugar, R. A. Shugar, and L. Bauman.

5.2. Safety Rules for Laboratories

A limited number of rules exist for the laboratory. The section leader will verify that these rules are rigidly and impartially enforced. Willful noncompliance with the rules will subject employees to appropriate disciplinary action up to and including termination.

- Eye protection is required at all times in the laboratories and where chemicals are stored and handled.
- Horseplay and pranks are especially dangerous and are prohibited.
- The hazards of chemicals used should be known (e.g., reactivity, flammability, corrosivity, stability, and toxicity). Material safety data sheets are obtained for each chemical and kept up to date.
- Eating and drinking in the laboratories are not allowed. Using laboratory glassware as food or beverage containers is prohibited.
- Smoking is not permitted in laboratory buildings at TA-35, TA-50, or TA-59.
- Appropriate clothing must be worn, including a protective apron or laboratory coat. Confine long hair and loose clothing. Sandals are not permitted.
- Pipetting by mouth is prohibited. Use a pipetting device, such as a pipetting bulb, or a syringe connected to the pipette by a piece of tubing.
- Areas where biological samples are handled should be washed down each day with disinfectant. Always wash hands with soap and water before leaving the laboratory.
- Never perform analytical work when alone. Others should be present in the laboratory area.
- Visitors are reqiuired to follow the same rules as laboratory workers.
- Containers of acids, alkalies, flammable or combustable substances, or corrosive chemicals should be encased in plastic or transported in carriers to protect them from breakage and to limit their spread in case of leaks.

- Aisles, hallways, and exits must be kept clear at all times. See Section 5.4.

5.3. Housekeeping

Avoid unnecessary hazards by keeping drawers and cabinets closed while working. Keep aisles free of obstructions, such as boxes, chairs, and waste receptacles. Avoid slipping hazards by picking up ice, glass beads, stoppers, glass rods, and other small items from the floor and by wiping up wet spots. Use recommended procedures in Section 6.15.4. for the proper disposal of chemical waste.

5.4. Corridors, Stairs, and Exitways

Furniture and equipment in corridors often result in a distorted exit path. In case of an emergency, many people may need to exit through such paths, possibly in total darkness, and would be faced with numerous projections and tripping hazards. During rescue operations, the fire department needs to be able to maneuver stretchers and other emergency equipment through the halls and up and down stairs.

A clear width of at least 48 inches along a fairly straight path is needed. Equipment in corridors must not block fire alarm boxes or extinguishers. Fire alarm boxes and extinguishers must be visible from either direction down the corridor and should be placed only along one side. The storage of combustible and flammable materials in corridors and stairways increases the potential danger to building occupants, as well as emergency personnel, and may not be stored or allowed to accumulate in such spaces.

Two exit paths from one's work station to the outside of the building should be checked frequently by every employee. These routes should be used during any scheduled fire drills to familiarize personnel with alternate paths should primary ones become blocked.

5.5. Bottle Disposal

Thoroughly rinse all chemical bottles before disposal. Large bottles that have been rinsed may be set outside the laboratory for janitorial pickup. Small rinsed bottles may be deposited into laboratory trash cans for disposal. A properly rinsed bottle minimizes the hazards associated with breaking a bottle during the disposal process. At TA-50, discard rinsed bottles in the barrel labeled noncompactible trash.

5.6. Scalpel Blade and Hypodermic Needle Disposal

Razor or scalpel blades must not be thrown in the trash without taking precautions to ensure that they cannot cut someone who is handling the waste. Wrap blades in heavy tape prior to disposal. When large numbers of blades are involved, place them in a sealed container such as a metal can.

Place hypodermic needles in a can for disposal. Keep syringes and hypodermic needles in a locked drawer or cabinet when not in use.

Scalpel blades and hypodermic needles that have been used on biological samples must be disposed of differently because of their potential infectivity. Do not bend,

break or otherwise manipulate these instruments as this increases the chance of accidental puncture. Place such instruments into rigid, puncture-proof containers and carefully seal container prior to disposal.

5.7. Drying Ovens

No combustible material may be stored in any drying oven. This includes the large drying ovens built into laboratory benches.

5.8. Refrigerators

Refrigerators constitute a unique hazard because explosions may occur when volatile or unstable chemicals are stored. Domestic refrigerators should not be used for chemical storage even when they have been modified to eliminate sources of open electrical contacts inside the storage cabinet. Even when modified, the motor and other electrical parts on the exterior can still ignite flammable vapors in the room. Only explosive-proof refrigerators may be used for chemical storage, and they must be wired directly to the power source.

Chemicals stored in refrigerators should be sealed and labeled with the name of the material, the date placed in the refrigerator, and the name of the person storing the material.

Food storage in refrigerators used for chemicals is absolutely prohibited.

5.9. Centrifuges

Users of centrifuges must be aware of the importance of balancing each time the centrifuge is used. Securely anchor bench top centrifuges. Important items to check on a centrifuge are the following:

- adequate wall thickness to shield against accidental flyaway objects,
- wheel brakes to prevent the centrifuge from "walking,"
- electrical grounding,
- a disconnect switch to shut off the rotor if the top is inadvertently opened, and
- location to reduce vibration of other equipment and so that supplies will not vibrate off shelves.

5.10. Fume Hoods

Laboratory fume hoods should be operating properly. Hoods serve to exhaust toxic, offensive, or flammable vapors from the laboratory and, with the sash closed, to provide a physical barrier between the worker and the chemical reaction. Exhaust rate is not a reliable single measure of hood performance. Air supply to the room is also important because drafts across the hood face decrease the hood's effectiveness. Extremely high exhaust rates will cause turbulence and degrade the hood's performance. Velometers should be used to survey hoods on a regular

schedule to ensure uniformity of air flow over the face of the hood and to detect any changes.

The HSE-9 ventilation hoods have sliding doors or panels to ensure adequate air velocity through the hoods. On the hoods with doors that can close off the hood opening, the doors should be closed enough to cover at least 3/4 of the hood opening except for periods when the operator is physically reaching through the opening to perform some manipulation. For those hoods with sliding panels, all panels must remain as installed no matter how inconvenient this may be.

All operations involving flammable, toxic, noxious, or otherwise hazardous solids, liquids, vapors, or gases must be conducted in a fume hood as much as possible. Perchloric acid digestions should only be carried out in the special perchloric acid hoods. The air slots at the back base of the working surface must not be blocked. Operations should be carried out as far into the hood as practical and at least 6 in. from the front edge of the hood. Keep your head outside the hood face. Equipment used within the hood should be raised on legs to avoid interference with the airflow, and the sash should be pulled as low as work permits.

The hood should not be used as a means for evaporating waste chemicals. Give waste chemicals to the Chemical Waste Coordinator for proper disposal. Chemicals should not be stored in hoods as they block air slots and crowd the available working area.

Hoods are evaluated annually by HSE-5, and the results are posted on the hood face. Hoods that have been evaluated and passed are marked with a sticker approving usage. Hoods without this sticker should not be used. Even with the sticker, adequate airflow should be verified by each operator before starting an operation that may emanate toxic or hazardous vapors or mists. If the airflow does not seem adequate, the operator should notify his supervisor and should not carry out any operations in the hood until adequate airflow is established.

5.11. Storage of Chemicals

Storage facilities must be stable and secure so tilting and collapse will not occur. Large containers of reagents should be stored on low shelves in a tray adequate to contain spills or leakage. Chemicals should be separated into compatible chemical families and then arranged in alphabetical order. See Table I. Examples of Incompatible Chemicals.

HSE-9 has observed that plastic bottles used to store metal standards in an acid matrix become brittle upon standing over an extended period of time. Normal handling of these bottles has caused fractures to develop that later resulted in leakage. Literature has reported that small plastic bottles of 30% hydrogen peroxide become brittle upon standing for one year or more. Normal handling has also caused these bottles to develop fractures that result in severe leakage. Since 30% hydrogen peroxide is such a strong oxidizing agent, leakage can create a very dangerous situation if any oxidizable materials are in the vicinity. Check all plastic bottles for fractures and then store the bottles in a beaker that could contain any leakage.

Keep only minimal quantities of flammable liquids in the laboratory. Store large quantities in approved safety containers or in fire-resistant solvent cabinets. Keep flammable liquids away from heat and direct sunlight. Many aldehydes, ethers, unsaturated hydrocarbons, and other compounds form peroxides on standing. Peroxide formation is accelerated by the presence of UV light and elevated temperature. Flammable liquids must be stored so that accidental contact with strong oxidizing agents such as permanganates or chlorates is avoided.

In the laboratory, keep chemicals not in current use in a chemical storage cabinet. HSE-9 keeps a current inventory of all chemicals and their locations.

5.12 Container Labels

Clearly label all reagent bottles and containers as to their contents. All chemicals received for laboratory use should be labeled with the date received. Prepared reagents must be labeled with their chemical composition, concentration, date of preparation, and name of the person who prepared the reagent. All unlabeled containers shall be discarded. Consult your supervisor about how and where to discard such reagents.

5.13 Compressed Gases

Compressed gases are most frequently used in standard cylinders of approximately 3000 cu ft. These gas cylinders are filled to high pressures, up to 2500 pounds per square inch on gauge (psig). The minimum-sized cylinder adequate to perform the job should be routinely used, particularly for hazardous gases such as the halogens and sulfur dioxide.

Cylinders, as received from the Liquid and Compressed Gas Processing Center (MAT-1), must be stored in the cages behind building OH-1 at TA-59 and at the south dock and lower east side of the building at TA-50. All cylinders must be capped and secured in place by a strap or chain located above center. Only those cylinders actually in use are allowed in the laboratory. Periodically inventory the gas cylinder storage areas and return those cylinders not in use to MAT-1.

Know the properties of the gas being handled. This includes factors such as toxicity and flammability. It is recommended that the section of the Matheson Gas Data Book pertaining to a particular gas be read by employees to alert them to any special precautions required by a gas. The following safety rules for use of compressed gases are suggested by the American Chemical Society, Committee on Chemical Safety:

- Handle cylinders of compressed gases as high-energy sources and potential explosives.
- When storing or transporting cylinders, make sure the protective cap is in place to protect the valve stem.
- When moving large cylinders, use a hand truck with the safety chain or strap in place. Never roll, slide, or drag the cylinder to move it even for a short distance.

- Do not expose cylinders to temperatures higher than approximately 50°C. Some rupture devices on cylinders will release at about 65°C.

- Be sure that the contents of the cylinder are properly identified. The contents of a cylinder are stamped on the valve and noted by a tag around the valve. Contents are also indicated by stenciling and a decal on the cylinder body. If all indicators do not agree, notify the Liquid and Compressed Gas Processing Center and return the cylinder to the gas plant for checking. The color of a cylinder is not a reliable indicator of the contents. Label any cylinder that you have ordered with your name.

- Never lubricate, modify, force, or tamper with a cylinder valve or any relief valve.

- Cylinders of toxic, flammable, or reactive gases should be used in fume hoods only. They should be stored in appropriately ventilated cabinets.

- Cylinders located in laboratories must be secured to a wall, bench, or other firm support by means of a chain or strap. The securing device must support the upper half of the cylinder to prevent tipping.

- Do not extinguish a flame involving a highly combustible gas until the source of gas has been shut off; otherwise, it can reignite, causing an explosion.

- The Compressed Gas Association has developed various cylinder valve outlet connectors for different families of gases to prevent the interchange of regulating and control equipment between gases that are not compatible. Use the proper regulator to control pressure and rate of flow. Do not use adaptors.

- Oil or grease on the high-pressure side of a cylinder of oxygen, chlorine, or oxidizing agent can lead to an explosion. Never lubricate a regulator. Use new regulators for oxygen cylinders or a regulator currently on an oxygen cylinder.

- Completely release the regulator pressure adjustment valve before opening the cylinder valve, and open the cylinder valve slowly. Never use a hammer or oversized wrench to force a valve that is stuck. Return all cylinders that leak or have stuck valves to the Liquid and Compressed Gas Processing Center.

- Always use a trap or check valve to prevent back-siphonage of chemicals into the cylinder.

- When the pressure in a cylinder is reduced to approximately 5 psig, attach an "empty" label and replace it with a fresh cylinder. Never bleed a cylinder completely empty. Leave a slight pressure to keep contaminants out. Place the empty cylinder in one of the outside storage areas for eventual return to the Liquid and Compressed Gas Processing Center.

- Always wear safety glasses when handling and using compressed gases.

5.14. Glassware

Borosilicate glassware is recommended for all laboratory glassware except for special experiments that use UV or other light sources. The only soft glass in the laboratory should be reagent bottles, measuring equipment, stirring rods, and tubing. The Laboratory maintains a well-equipped glass shop staffed with professional glass blowers. Difficult jobs should be referred to the glass shop in MEC-10, Specialized Fabrication.

Cracked or broken glassware must be discarded. All glassware for disposal must be placed in a plastic-lined cardboard box. Tape the box shut when full and place in the hallway for janitorial pickup. Glassware contaminated with radionuclides should be placed in the special radioactive contamination containers. A special waste container has been set up for PCB contaminated items. Never throw broken glassware in the regular trash as it can cause injury to janitorial personnel.

5.14.1. Preparing Glass Tubing

Simple operations, such as cutting and bending glass tubing, will be performed by competent personnel. Score the tubing with one quick firm stroke with a sharp file, rocking the file to extend the deep nick one-third around the circumference. Wetting the nick will help keep the fracture open. Wrap the tubing with a towel, turn the nick away from your body with the nick centered between your hands, and push on the tubing with your thumbs. Fire-polish all cut ends.

When inserting glass tubing through a perforated cork or rubber stopper, make sure the hole is sufficiently large and lubricate the glass and stopper with water or glycerine. Wrap both hands in a towel or wear leather gloves and insert the tubing with a slow, rotating, pushing motion. Keep the distance between the hands at a minimum.

5.14.2. Ground-Glass Stoppers

Frozen ground-glass stoppers can be hazardous to remove as the container could break during the process. Volumetric flasks can be especially hazardous due to their long, thin necks. In some cases the stopper can be removed using a special tool made expressly for this purpose, or it may be freed by placing it under hot running water for 30 seconds and/or gently tapping the stopper. It is better to discard the apparatus than to sustain an injury trying to remove a frozen stopper. If you have questions about a particular situation, consult your supervisor.

5.15. Electrical Safety

Under certain circumstances even electrical currents of very low amperage and voltage may result in fatal shock. Low-voltage dc circuits do not normally present a hazard to human life, although severe burns are possible. The length of contact with a live circuit affects the degree of damage.

- Only qualified persons should maintain electric or electronic equipment.

- Make no modifications that negate the built-in safety features of the equipment.
- Never use electric wires as supports, and never pull on live wires.
- Locate portable heaters away from combustible materials.
- Report evidence of any excessive heating of equipment to your supervisor.
- Cardiopulmonary resuscitation (CPR) often will revive the victims of high-voltage shock, including lightning strikes.

All laboratory personnel should know the location of circuit breakers and how to cut off all electrical service to their laboratory. With 60-cycle ac, the perception threshold of electrical shock is 1 mA. The effects of increasing current on an adult human are listed below.

Current (mA)	Effect
0-1	No sensation
1-3	Mild perception
3-10	Painful shock, muscular contraction
Over 10	Paralysis, inability to let go
Over 30	Asphyxiation, unconsciousness
80-240	Fibrillation
4000	Heart paralysis
Over 5000	Burning

When used improperly or with no regard for good safety practices, most electrical equipment used in the laboratory could cause fatalities. Ground fault interrupters should be installed in each circuit, and all electrical equipment must be properly grounded. Equipment with a three-pronged plug will provide a satisfactory ground. Equipment without a three-pronged plug can use a three-wire adapter plug. Connect the green grounding wire to the case of the instrument.

Electrical equipment that produces the slightest shock is not to be used until it has been repaired and properly grounded. Do not operate any electrical equipment when standing on a wet surface, when your hands are wet, or when your body is in contact with a metal surface. Do not operate any equipment that has a frayed cord. Frequently inspect all electrical equipment for faulty connections and other unsafe conditions. HSE-9 holds an annual electrical safety inspection.

5.16. Lifting and Carrying

Do not lift excessively heavy loads. If you are in doubt about your lifting capability, get help. Never carry a load that you cannot see over or around. Use a cart or hand truck to move heavy, bulky, or unwieldy items. Arrange to have Pan Am riggers do difficult operations. Supervisors should anticipate work requiring Pan Am help and make the necessary arrangements in advance.

When lifting a heavy object, correct posture is important to prevent injury. The following procedures should be followed when lifting is required:

- Set feet solidly, with one foot slightly ahead of the other, and far enough apart to give good balance and stability.
- Get as close to the load as possible.
- Bend legs about 90 degrees at the knees keeping the back as straight as possible. The back need not be vertical, but it should not be arched.
- Bend at the hips, not the middle of the back.
- Grip the object firmly.
- Straighten the legs to lift the object, bringing the back to the vertical position at the same time.
- If it becomes necessary to change your grip, first set the object down.
- The above procedure is reversed when setting an object down.

Refer to the HSE-9 Back Facts booklet, which is a program for the prevention of back injury and maintenance of a healthy back. Consult the Occupational Medicine Group (HSE-2) for more information on back care. The HSE division training program offers a back care clinic. This clinic teaches proper care of the spinal column and its supporting muscular system, back anatomy and physiology, body mechanics and posture, proper lifting and pulling techniques, stress management, and relaxation exercises. The clinic is conducted by a registered physical therapist. Call Occupational Medicine, 7-7251 for information

5.17 After-Hours Work

No one shall work alone in the HSE-9 laboratories. Laboratory work after normal working hours is only permitted when there are at least two people present. Office work is permitted at any time. The Group Leader, or his alternate, must approve all laboratory work outside normal working hours.

TABLE I. Examples of Incompatible Chemicals

Chemicals	Incompatible With
Acetic acid	Chromic acid, nitric acid, hydroxyl compounds, ethylene glycol, perchloric acid, peroxides, permanganates
Acetylene	Chlorine, bromine, copper, fluorine, silver, mercury
Acetone	Concentrated nitric and sulfuric acid mixtures
Alkali and alkaline earth metals (such as powdered aluminum or magnesium, calcium, lithium, sodium, potassium)	Water, carbon tetrachloride or other chlorinated hydrocarbons, carbon dioxide, halogens
Ammonia (anhydrous)	Mercury (in manometers, for example), chlorine, calcium hypochlorite, iodine, bromine, hydrofluoric acid (anhydrous)
Ammonium nitrate	Acids, powdered metals, flammable liquids, chlorates, nitrites, sulfur, finely divided organic combustible materials
Aniline	Nitric acid, hydrogen peroxide
Arsenical materials	Any reducing agent
Azides	Acids
Bromine	See chlorine
Calcium oxide	Water
Carbon (activated)	Calcium hypochlorite, all oxidizing agents
Carbon tetrachloride	Sodium
Chlorates	Ammonium salts, acids, powdered metals, sulfur, finely divided organic or combustible materials
Chromic acid and chromium trioxide	Acetic acid, naphthalene, camphor, glycerol, alcohol, flammable liquids in general
Chlorine	Ammonia, acetylene, butadiene, butane, methane, propane (or other petroleum gases), hydrogen, sodium carbide, benzene, finely divided metals, turpentine
Chlorine dioxide	Ammonia, methane, phosphine, hydrogen sulfide
Copper	Acetylene, hydrogen peroxide

TABLE I. (cont)

Chemicals	Incompatible With
Cumene hydroperoxide	Acids (organic or inorganic)
Cyanides	Acids
Flammable liquids	Ammonium nitrate, chromic acid, hydrogen peroxide, nitric acid, sodium peroxide, halogens
Fluorine	All other chemicals
Hydrocarbons (such as butane, propane, benzene)	Fluorine, chlorine, bromine, chromic acid, sodium peroxide
Hydrocyanic acid	Nitric acid, alkali
Hydrofluoric acid (anhydrous)	Ammonia (aqueous or anhydrous)
Hydrogen peroxide	Copper, chromium, iron, most metals or their salts, alcohols, acetone, organic materials, aniline, nitromethane, combustible materials
Hydrogen sulfide	Fuming nitric acid, oxidizing gases
Hypochlorites	Acids, activated carbon
Iodine	Acetylene, ammonia (aqueous or anhydrous), hydrogen
Mercury	Acetylene, fulminic acid, ammonia
Nitrates	Sulfuric acid
Nitric acid (concentrated)	Acetic acid, aniline, chromic acid, hydrocyanic acid, hydrogen sulfide, flammable liquids, flammable gases, copper, brass, and heavy metals
Nitrites	Acids
Nitroparaffins	Inorganic bases, amines
Oxalic acid	Silver, mercury
Oxygen	Oils, grease, hydrogen; flammable liquids, solids, or gases
Perchloric acid	Acetic anhydride, bismuth and its alloys, alcohol, paper, wood, grease, oils
Peroxides, organic	Acids (organic or mineral), avoid friction, store cold

TABLE I. (cont)

Chemicals	Incompatible With
Phosphorus (white)	Air, oxygen, alkalies, reducing agents
Potassium	Carbon tetrachloride, carbon dioxide, water
Potassium chlorate	Sulfuric and other acids
Potassium perchlorate (see also chlorates)	Sulfuric and other acids
Potassium permanganate	Glycerol, ethylene glycol, benzaldehyde, sulfuric acid
Selenides	Reducing agents
Silver	Acetylene, oxalic acid, tartartic acid, ammonium compounds, fulminic acid
Sodium	Carbon tetrachloride, carbon dioxide, water
Sodium nitrite	Ammonium nitrate and other ammonium salts
Sodium peroxide	Ethyl or methyl alcohol, glacial acetic acid, anhydride, benzaldehyde, carbon disulfide, glycerin, ethylene glycol, ethyl acetate, methyl acetate, furfural
Sulfides	Acids
Sulfuric acid	Potassium chlorate, potassium perchlorate, potassium permanganate (similar compounds of light metals such as sodium and lithium)
Tellurides	Reducing agents

TABLE OF CONTENTS

6. CHEMICAL SAFETY AND CHEMICAL HAZARD COMMUNICATION

6.1. Introduction . . . . . LS 6-3

6.2. Chemical Spills . . . . . LS 6-3

6.3. Organic Peroxides . . . . . LS 6-3

6.4. Acids and Alkalies . . . . . LS 6-4

6.5. Oxidizing Agents . . . . . LS 6-4

6.6. Perchloric Acid . . . . . LS 6-5

6.7. Organic Solvents . . . . . LS 6-5

6.8. Carcinogens, Mutagens, and Teratogens . . . . . LS 6-6

6.9. Metals . . . . . LS 6-7

6.9.1. Mercury . . . . . LS 6-8

6.9.2. Cadmium . . . . . LS 6-8

6.9.3. Beryllium . . . . . LS 6-8

6.9.4. Reactivity with Water . . . . . LS 6-8

6.10. Cyanides and Nitriles . . . . . LS 6-8

6.11. Hydrogen Sulfide . . . . . LS 6-9

6.12. Flammable Liquids . . . . . LS 6-9

6.13. Cryogenic Liquids and Solids . . . . . LS 6-10

6.14. Radioactive Materials . . . . . LS 6-10

6.15. Hazardous Waste Management . . . . . LS 6-12

6.15.1. Introduction . . . . . LS 6-12

6.15.2. Definition of Hazardous Waste . . . . . LS 6-12

6.15.3. Temporary Storage of Hazardous Waste . . . . . LS 6-13

6.15.4. Chemical Waste Coordinator . . . . . LS 6-14

6.15.5. Disposal of Chemicals and Hazardous Waste . . . . . LS 6-14

6.15.6. Hazardous Waste Minimization . . . . . LS 6-15

6.15.7. Recyclable Materials . . . . . LS 6-15

6.16. Hazardous Material Transport On-Site . . . . . LS 6-15

6.16.1. Introduction . . . . . LS 6-15

6.16.2. Policy . . . . . LS 6-16

6.16.3. HAZPACT Coordinators . . . . . LS 6-16

6.17. Chemical Hazard Communication . . . . . LS 6-16

6.17.1. Introduction . . . . . LS 6-16

6.17.2. Program Elements . . . . . LS 6-17

6.17.3. Evaluation of Operations . . . . . LS 6-17

6.17.4. Hazard Notification and Training . . . . . LS 6-17

6.17.5. Training Support . . . . . LS 6-18

6.17.6. Chemical Inventory . . . . . LS 6-18

6.17.7. Material Safety Data Sheets . . . . . LS 6-18

6.17.8. Labeling of Hazardous Materials . . . . . LS 6-19

6.17.9. Procurement . . . . . LS 6-19

6.17.10. Packaging and Transport . . . . . LS 6-19

6. CHEMICAL SAFETY AND HAZARD COMMUNICATION

6.1. Introduction

Chemicals may be hazardous due to several mechanisms. Some chemicals are toxic, while others may be corrosive, flammable or radioactive. It is quite common for a substance to fall into more than one category; for example, p-dioxane is flammable, toxic, and carcinogenic. The information in this section does not cover all possible hazards. Consult the label on the container and the material safety data sheet as received from the supplier for information on the hazards of the contents. Further information on chemical hazards can be found in the OHSA handbooks located in the Group office, in the NIOSH Pocket Guide to Chemical Hazards given to all HSE-9 personnel, and by consulting the HSE-5 industrial hygiene group or your supervisor.

When handling chemicals, wear protective clothing to prevent accidental contact with the material. Depending on the quantities being handled, the type of material, and the operation, this may mean rubber gloves, goggles, face shields, and rubber aprons. Many chemicals should be handled in the hood or with some type of respiratory protection.

Disposal of chemical hazardous waste down sink and floor drains is prohibited by Laboratory policy (AR 10-3 of the Health and Safety Manual) without prior approval from the Waste Management Group (HSE-7). This policy *must be* followed to keep the Laboratory in compliance with Federal Environmental Protection Agency regulations and DOE orders.

6.2. Chemical Spills

Chemical-spill, clean-up kits for acids, caustics and solvents are located in the east and west hallways and basement of OH-1, in the main laboratory and in the basement of TA-50 near room 118, and in room A133 at TA-35. Locate these spill control products and become familiar with the Instruction Manual. The manual contains a list of hazardous chemicals for which the spill control products can be used. Materials used to clean up spills at TA-50 should be placed in the radioactive waste containers after thoroughly rinsing with water.

6.3. Organic Peroxides

As a class, organic peroxides are low-power explosives. They are hazardous because of their extreme sensitivity to shock, sparks, and other forms of accidental ignition. All organic peroxides are extremely flammable. Compounds of the following types are known to form peroxides:

- Aldehydes
- Ethers, especially cyclic ethers, and ethers derived from primary and secondary alcohols.
- Compounds containing benzylic hydrogen atoms.

- Compounds containing the allylic structure, including most alkenes.
- Ketones, especially cyclic ketones.
- Vinyl and vinylidene compounds (e.g., vinyl acetate and vinylidene chloride).

6.4. Acids and Alkalies

All acids and alkalies should be handled with care, especially when in concentrated form. Take extra precautions when opening containers sealed at sea level and in handling bulk acids and bases. Air tight containers sealed near sea level are mildly pressurized compared with Los Alamos atmospheric pressure and should be opened with care.

If acids or alkalies are splashed on the skin, immediately wash the affected area with large volumes of water. Under no circumstances should the acid or alkali be neutralized. Alkalies require prolonged washing to remove the chemical. Glacial acetic acid and sulfuric acid also require prolonged washing. Wash the affected area for at least 15 minutes. Gentle massage may help. Give particular attention to the crevices around the fingernails. Report to HSE-2, Occupational Medicine, for further treatment. If the eyes are involved, wash for at least 20-30 minutes under running water and report immediately to HSE-2. Know the location of the safety showers and eye wash stations in your work area. See Fig. 2.2-2.6.

Hydrofluoric acid is extremely hazardous and must always be handled with neoprene gloves. Hydrofluoric acid burns are deep, painful, and slow to heal. The fumes of this acid can be as hazardous as exposure to the liquid.

The amount of concentrated acid allowed in each laboratory is limited to one bottle in use plus the amount expected to be used in one week. Plastic-coated bottles are recommended. Acid bottles should be placed in an appropriate tray or container. Never carry bottles of acid between laboratories except in a safety container. Store oxidizing acids, such as nitric and perchloric, away from reducible materials such as organic solvents, paper or cardboard. Do not store acids and bases together. Whenever possible, conduct all operations involving acids in fume hoods. When pouring acids, use a tray capable of holding all of the liquid in the event of glassware failure.

6.5. Oxidizing Agents

Paper or cotton towels are frequently used to wipe up spills of nitric acid and/or hydrogen peroxide. Rinse these towels thoroughly with water before discarding in the trash because the contents of the trash container have been known to spontaneously ignite at a later time. Do not discard strong oxidizing agents in trash containers where easily oxidized waste is discarded. Perchloric acid spills should be wiped up with wet towels. These towels must also be thoroughly rinsed with water before disposal.

6.6. Perchloric Acid

Due to the extremely hazardous nature of perchloric acid and the potential for misuse, it should be used only by experienced personnel in procedures of demonstrated safety in a fume hood with wash-down provisions. At its boiling point it will react violently with organic and some inorganic materials. Perchloric acid fumes can form unstable perchlorates with dust and other organic matter that can ultimately ignite or explode. Old containers of perchloric acid are a hazard and should not be kept or opened if crystals have formed around the cap. The fume hood must be washed down after each use. Do not mix the acid with a strong dehydrating agent, such as acetic anhydride or concentrated sulfuric acid because anhydrous perchloric acid, which is very unstable, is produced. Spills should be diluted with water and wiped up with a towel. The towel must be thoroughly rinsed with water before disposal.

6.7. Organic Solvents

Most of the organic solvents commonly used are volatile and are harmful when relatively small amounts are inhaled. Use organic solvents in a hood and wear the proper type of gloves. Many solvents are readily absorbed through the skin. Some examples are aniline, nitrobenzene, phenylhydrazine, and dimethylsulfate. Although not very toxic itself, dimethylsulfoxide can penetrate the skin carrying with it dissolved materials that are toxic. A comprehensive list indicating the types of compounds known to be toxic is contained in "Threshold Limit Values for Chemical Substances and Physical Agents in the Workroom Environment," American Conference of Governmental Industrial Hygienists, Cincinnati, OH 45201. More information about the toxicity of chemicals can be obtained through the industrial hygienist assigned to your area and from the OSHA handbooks.

Inhalation of contaminated air can be hazardous. Some compounds can be absorbed through the lungs and subsequently transported to other parts of the body. All potentially toxic chemicals should be handled in a hood to minimize the potential for inhalation. Never directly smell a chemical as a means of identification.

The fire hazard of some organic solvents can be appreciable. Refer to Section 6.12. on flammable liquids. Many organic solvents are denser than air and tend to collect in low spots, such as the floor, or they can travel along bench tops. Beware of distant flames and hot ovens. Work in areas of adequate ventilation. Do not use highly volatile, flammable solvents in glove boxes.

Diethyl ether must be stored in a refrigerator designed or modified for the storage of flammable solvents. The ether must be inhibited the copper wire, if possible, and the container must be labeled with the opening date. Storage is limited to six months. After six months, give the container to the Chemical Waste Coordinator for disposal.

Inventories of solvents should be kept as low as possible. Check the HSE-9 chemical inventory database before ordering new solvents. Beware of plastic containers. Some containers are permeable to organic solvents and others may dissolve in the solvent after a specific period of time has passed.

6.8. Carcinogens, Mutagens, and Teratogens

Within the expansive array of toxic chemicals, chemical carcinogens, mutagens, and teratogens have been recognized as a significant subclass of hazardous materials. The toxicity of these materials is unique because of the length of time between exposure to the agent and the onset of symptoms. Because of this latent effect, it is difficult to establish which chemicals fall into the following categories:

- Carcinogens-substances capable of inducing cancer.
- Mutagens-substances causing permanent, transmissible, alterations in genetic information.
- Teratogens-agents interfering with normal prenatal development causing abnormalities in the fetus.

A list of known and suspected carcinogens is continually expanded or updated by OSHA. As substances are scientifically evaluated, they are placed in one of three categories. The entire Category I listing is available from regional offices of OSHA.

- Category I. Confirmed carcinogens whose classification is based on human data, on tests in two mammalian species, or on replicated tests in one species.
- Category II. Substances whose carcinogenicity is presumed based on evidence that is only suggestive or on testing that is positive in only one species and has not yet been replicated.
- Category III. Substances that have shown no evidence or at best only meager evidence of carcinogenic risk during testing.

A current list of carcinogens that includes the following information must be readily accessible to emergency and HSE personnel:

- chemical name,
- Chemical Abstract Service (CAS) number,
- quantity of carcinogen,
- location of use and storage,
- brief description of operation,
- Standard Operating Procedure (SOP) number, and
- names of employees who work with or handle the carcinogen.

HSE-9 must use the following three lists to determine whether materials in use or in storage in HSE-9 are carcinogens.

The current 29 CFR 1910 OSHA-regulated carcinogens listed in AR 6-1 (February, 1990) of the Laboratory Health and Safety Manual are the following:

Asbestos
Benzene
4-Nitrobiphenyl
alpha-Naphthylamine
Ethylene Oxide
Methyl Chloromethyl ether
3,3'-Dichlorobenzidine (and its salts)
bis-Chloromethyl Ether
beta-Naphthylamine
Benzidine
4-Aminodiphenyl
beta-Propriolactone
2-Acetylamino Fluorene
4-Dimethylamino Azobenzene
N-Nitroso Dimethylamine
Vinyl Chloride
Inorganic Arsenic
Coke Oven Emissions
Ethyleneimine
Formaldehyde
1,2-Dibromo-3-Chloropropane
Acetonitrile

The following confirmed human carcinogens are substances, or substances associated with industrial processes, recognized to have carcinogenic or cocarcinogenic potential:

Chromate (chromite ore processing)
Chromium (VI) certain water insoluble compounds
Coal tar pitch volatiles
Nickel, fume and dust (sulfide roasting)
Zinc chromates

The following suspected human carcinogens (confirmed animal carcinogens) are chemical substances or substances associated with industrial processes that are suspect of inducing cancer, based either on limited epidemiological evidence or demonstrated carcinogenesis in one or more animal species by appropriate methods:

Acrylamide
Antimony trioxide production
Arsenic trioxide production
Benzo[a]pyrene
Beryllium
1,3-Butadiene
Carbon tetrachloride
Chloroform
Chromates of Pb and Zn, as Cr
Chrysene
Dimethylcarbamoyl chloride
1,1-Dimethylhydrazine
Dimethyl sulfate
Ethylene dibromide (EDB)
Hexachlorobutadiene
Hexamethyl phosphoramide
Hydrazine
4,4'-Methylenebis (2-chloroaniline)
Methylene chloride
4,4'-Methylenedianiline
Methylhydrazine
Methyl iodide
2-Nitropropane
N-Phenyl-beta-naphthylamine
Phenylhydrazine
Propane sultone
Propylene imine
o-Tolidine (DMB)
o-Toluidine
p-Toluidine
Vinyl bromide
Vinylcyclohexane dioxide

6.9. Metals

Some metals are very hazardous and require special precautions. Many metals are toxic and some can burn or explode when in finely divided form. Some form

organo-metallic compounds that can explode under certain conditions. Check with your supervisor before beginning any new or unfamiliar procedure.

6.9.1. Mercury

Mercury can be absorbed through the skin. Soluble compounds will cause severe poisoning if ingested. The volatility of mercury at room temperature is sufficient to constitute an inhalation hazard. Mercury spills must be immediately and thoroughly cleaned up using an aspirator bulb or a vacuum device. Mercury spilled into floor cracks can be made nonvolatile by amalgamation with zinc dust. Contact the area industrial hygienist to determine the effectiveness of the cleanup.

6.9.2. Cadmium

Cadmium, as finely divided metal or as cadmium oxide, is highly toxic when inhaled or ingested. Silver soldering must be done in a well-ventilated area as cadmium oxide fumes may be present.

6.9.3. Beryllium

Beryllium and many of its compounds are especially toxic, and care must be exercised when working with them. Beryllium includes beryllium metal, beryllium oxide, alloys containing 4% or more beryllium, and beryllium compounds such as beryllium sulfate. An SOP and the approval of your immediate supervisor and HSE-5 is required before initiating any work with beryllium or its compounds. Low level beryllium standard solutions used by HSE-9 do not need this approval. Well-ventilated enclosures or glove boxes may be required. Respirators may also be necessary.

6.9.4. Reactivity with Water

Some metals, such as lithium, sodium, potassium, calcium, barium, and strontium, react violently with water-releasing hydrogen gas in the process. The heat of reaction is often enough to ignite the hydrogen causing an explosion. These metals are usually stored under mineral oil.

The examples discussed above do not constitute a complete list of all the hazards of working with metals but are descriptions of some of the more common hazards. Consult your supervisor, your assigned industrial hygienist, and the available literature before working with any new material or on a new or unfamiliar procedure.

6.10. Cyanides and Nitriles

Cyanides and Nitriles are among the most toxic and rapidly acting substances encountered in the chemical laboratory. A few breaths of hydrogen cyanide (HCN) can be fatal.

Because the toxic action of inhaling cyanides and nitriles is so rapid, first-aid treatment and an antidote (amyl nitrite) must be given immediately. Persons using

cyanide should have amyl nitrite ampules pinned to their lab coats and taped to the hood. The person administering first aid should break open an amyl nitrite ampule and hold it under the affected person's nose for about 15 seconds and continue at two-minute intervals until help arrives. Excess nitrite will reduce blood pressure. If the patient is not breathing, artificial respiration must also be administered.

Section leaders shall verify that personnel using cyanides are thoroughly familiar with proper disposal methods and with methods to convert the material to cyanates.

6.11. Hydrogen Sulfide

Hydrogen sulfide is extremely dangerous. Exposed persons quickly lose their ability to smell it, even when it is still present in the air. Exposure to low concentrations causes irritation of all parts of the respiratory system and eyes, followed by headache, dizziness, and nausea. Higher concentrations may cause immediate loss of consciousness followed by respiratory paralysis. All laboratory operations with hydrogen sulfide must be carried out in a fume hood.

6.12. Flammable Liquids

Flammable liquids are used in a variety of analytical procedures and are used to clean apparatus that contain water-insoluble materials. Flammable liquids should only be used in a hood. If the hood is operating properly, the airflow will be adequate to keep the concentration of vapor in the air below the flammability range. When using organic solvents, choose the least flammable solvent in situations where you have a choice. If possible, avoid using diethyl ether or acetone. Work away from flames, furnaces, hot plates, and other sources of ignition.

Store flammable liquids in approved containers. For quantities less than one liter, a glass bottle with a tight screw-cap seal is usually acceptable. Quantities greater than one liter should be transferred to a metal safety can with a spring-loaded lid and an antiflashback screen. Properly label the new container to show its contents. When transferring a large quantity of flammable liquid from one container to another, electrically ground and bond both containers as the friction flow of the liquid can build up enough static charge to ignite the vapors.

If a large amount of flammable material is spilled, prompt action is necessary to prevent fire:

- immediately shut down all flames and electrical equipment;
- close off the source of the flammable material as quickly as possible;
- vacate the area of all personnel not immediately needed to handle the emergency; and
- ventilate the area as effectively as possible.

Use extreme care in any clean-up operation. Almost anything done to clean up a spill has a tendency to increase the vapor concentration and, consequently, to increase the fire hazard. Spill clean-up kits are available near all work areas.

Spreading the absorbent from the kit on the spill will greatly reduce the hazards. In the event of a fire, dial 911, pull the fire alarms, and evacuate the building. See fire safety Section 3.5. and building evacuation Section 2.9. for more information.

6.13. Cryogenic Liquids and Solids

Cryogenic liquids and solids are used as very low temperature coolants and are hazardous because of their extreme cold and the properties of the vaporized gas. Cryogenic materials are normally gases but are converted to liquids or solids by very low temperatures and/or high pressures. Examples are liquid nitrogen, liquid air, and dry ice.

Contact with the cold liquid, solid, or vapor can cause frostbite, and contact with cold pipes or containers can cause the skin to stick. When working with these materials, wearing a face shield is mandatory. Heavy gloves must also be worn. When liquids vaporize, large volumes of gas are produced, and these gases can be toxic, explosive or corrosive. Relatively inert gases, such as nitrogen and carbon dioxide, as well as the so-called "inert gases," can become asphyxiants because of rapid displacement of air in an enclosed area.

Cryogenic liquids and solids must not be stored in sealed containers because excessive pressures can build up. In addition accidental pressurization from ice plugs forming on vents or entrapment of cryogenic fluids between valves without pressure relief must be avoided. Dewar flasks made of glass must be completely taped on the outside or plastic weave wrapped to minimize the danger from flying glass in the event of an implosion.

A special hazard of using cryogenic liquids is possible oxygen condensation from the atmosphere. Oxygen has a higher boiling point than does nitrogen. As liquid nitrogen evaporates, it becomes richer in oxygen until almost pure oxygen remains. If this oxygen comes in contact with a combustible material, an explosion may occur. Even metals have been known to explode when in contact with liquid oxygen, possibly because of oil film on the metal.

6.14. Radioactive Materials

"As low as is reasonably achievable" (ALARA) is an operating principle that encourages keeping exposure to toxic materials and radiation to the lowest reasonably achievable level. Using this principle is prudent because the harmful effect threshold for ionizing radiation and some toxic agents has not been demonstrated absolutely. In practice, ALARA means conducting activities at the Laboratory such that exposures to radiation and other toxic agents are reduced to the lowest practical levels, considering the possible means of exposure reduction and the cost.

The ALARA principle requires that

- employees who work with radiation-producing machines, radioactive materials, or toxic agents know about and apply reasonable exposure-reducing techniques BEFORE acting; and

- supervisory personnel fully support and train employees in ways to reduce exposures and hold the employees accountable for their actions.

As adopted by the Department of Energy and this Laboratory, the ALARA principle also applies to radioactive and toxic material releases to the environment, to collective doses, and to individual doses for which it was originally set forth.

Because of the nature of the work in HSE-9, criticality hazards do not exist. If the nature of the work changes in the future and the work involves several hundred grams of fissionable material, HSE-6 should be consulted to eliminate any possibility of a criticality accident. At that time a Standard Operating Procedure (SOP) must be written.

When exiting a laboratory in which above-background levels of radionuclides, including standards, are used or stored, shoes and clothing should be monitored. Monitoring will prevent the spread of contamination into other areas, including low-level laboratories. This is especially true at TA-50 where higher-level radioactive samples, such as liquid waste treatment sludge, are handled. Bench surfaces should be monitored daily by the occupant of the laboratory. All radioactive spills will be cleaned up immediately until the level of surface contamination is nondetectable above background.

An HSE-1 Health Protection Technician (HPT) is assigned to Building 1 at TA-50 to provide monitoring support for radioactive contamination control. Instruments are available to laboratory personnel for self-monitoring of the work area as well as their own person. HSE-1 monitors the laboratory area at TA-50 once a week to determine whether the floor and bench tops are free from removable radioactivity. The spilling of radioactive material in the laboratory at TA-50 when processing high-level samples or high-level standard radioisotope solutions is considered an emergency situation. Any radioactive spills must be reported to the supervisor and the HPT immediately. The HPT shall determine the extent of the contamination and establish safety precautions to be taken during the cleanup. TA-50 laboratory personnel who perform radiochemical analyses should periodically submit urine samples (according to the established HSE-1 schedule) to the bioassay section for the analysis of alpha emitters.

Surface contamination can be removed by a variety of methods. Covering the spot with tape, pressing down, and removing the tape is sometimes effective. Scrubbing with 6 M hydrochloric acid or 4 M nitric acid, depending on the surface, may be more effective in removing contamination. Organic solvents are sometimes effective. If a spot cannot be removed, report it to your supervisor and HSE-1.

In case of an accident involving radioactive material, the first concern is the health and safety of the people involved. If anyone requires emergency care or first aid, see that it is provided at once. In the event of a significant spill, the laboratory should be vacated immediately. Notify your supervisor and HSE-1 at 7-7878. It may be necessary to cordon the area prior to initiating decontamination procedures. When decontamination is complete, dispose of all cleaning materials in the contaminated waste bin. Monitor all clothing to avoid spreading the contamination. Any cuts obtained while working with radioactive material must be monitored for contamination. If the contaminant is plutonium or americium, an HSE-1 wound

monitoring system will be used. Call HSE-1 at 7-7878 to report potentially contaminated injuries and proceed to HSE-2, Occupational Medicine for medical treatment after monitoring.

See Appendix V., Personnel Radiation Exposure Control AR 3-1, for more information on radiation exposure standards and personnel exposure monitoring.

6.15. Hazardous Waste Management

6.15.1. Introduction

Chemical waste disposal is complex. It is governed by many federal and state laws from the time we as a generator declare it waste to the time it is treated or disposed of. The Laboratory operates under an extensive waste analysis plan. If there is not accurate and documented process knowledge, such as labels on bottles or lists of materials in a container, the material must be analyzed to identify hazardous constituents. The Laboratory must assume that the material is hazardous waste until analytical information is received proving otherwise.

The responsibility of hazardous waste management and for its minimization lies with the Group Leader. Group leaders must verify that the potentially hazardous waste materials in their work areas are identified and that the Industrial Hygiene Group (HSE-5) is contacted if workers could be exposed while handling, treating, or disposing of such materials.

Group leaders must verify that their operating personnel are trained in Waste Management and follow those policies and procedures appropriate to their work.

6.15.2. Definition of Hazardous Waste

Hazardous chemical waste is any chemical or mixture of chemicals that is intended for disposal and is corrosive to living tissue; is toxic, flammable, carcinogenic, teratogenic, mutagenic, or infectious; or in any way poses a present or potential hazard to human health or the environment.

Hazardous waste is defined as materials that are either characteristic wastes or those specifically listed. Characteristic wastes are classified as follows:

- Ignitable—flammable materials with a flash point of less than 60°C (e.g., acetone and ethanol).
- Corrosive—materials that dissolve metal or other materials, or can burn skin and tissue (e.g., nitric acid and sodium hydroxide).
- Reactive—unstable materials that undergo rapid or violent chemical reaction (e.g., explosives and lithium hydride).

Listed wastes are as follows:

- D List—also defined EP Toxic, an extractive procedure for As, Ba, Cd, Cr, Pb, Hg, Se, Ag, and 6 pesticides.
- F List—halogenated and nonhalogenated solvents and cyanide wastes from nonspecific sources.
- K List—86 chemicals including waste water treatment sludges and explosive processing sludges from specific process sources.
- P List—120 acutely hazardous materials such as phosgene.
- U List—250 toxic chemicals such as benzene and toluene.

6.15.3. Temporary Storage of Hazardous Waste

HSE-9 is a Satellite Storage area and may accumulate up to 55 gallons of waste or 1 quart of acutely hazardous waste (P and U lists). The storage area must be labeled "Hazardous Waste Satellite Storage." HSE-9 has a properly designated locked chemical storage cabinet located on the south side of building OH-1 at TA-59 near the lunch room. The HSE-9 Chemical Waste Coordinator is responsible for the storage cabinet and for regularly inspecting all containers for leakage that are placed in it. All containers must be labeled "hazardous waste" with the contents identified and the date noted on which accumulation began.

Chemically contaminated rags and wipes are regulated waste if the material involved is spent solvents, heavy metals, cyanides, and/or other toxic chemicals. If the chemical involved is only regulated under the Resource Conservation and Recovery Act (RCRA) because of a characteristic, such as ignitability, then the rags are exempted from regulation. Rags, chemwipes, Q-tips, etc., that come into contact with regulated chemicals must be segregated from sanitary waste.

HSE-9 personnel have the following responsibilities in their everyday work with chemicals:

- Identify and document waste as it is generated.
- Keep lists of chemicals when placed in storage bottles.
- Keep metals and solvents segregated.
- Use the proper storage container and storage area.
- Take steps to reduce the amount of waste generated.

6.15.4. Chemical Waste Coordinator

A Chemical Waste Coordinator must be identified for each waste-generating group and will serve as the primary contact to the Waste Management staff. The HSE-9 Chemical Waste Coordinator must verify the safe use of chemical waste collection areas or cabinets and the predisposal treatment of the wastes, as determined appropriate by the Waste Management Group. This person is also the focal point for hazardous waste and minimization issues.

6.15.5. Disposal of Chemicals and Hazardous Waste

The Waste Management Group, HSE-7, disposes of hazardous waste (toxic, carcinogenic, explosive). When HSE-9 personnel determine that chemical wastes are ready for disposal, the HSE-9 Chemical Waste Coordinator will complete a Chemical Waste Disposal Request and send the form to Waste Management. Upon receipt of the form, Waste Management determines the packaging, handling, treatment, transportation, and disposal requirements, based on the type and quantity of the waste involved. HSE-9 may be required to complete some pre-disposal treatment/chemical analysis of the wastes before Waste Management will take over the disposal operations. Details on their requirements are given in the Health and Safety Manual, Section 10.

All waste must be properly packaged, with incompatible chemicals kept separate, in Waste Management-approved, leakproof containers to ensure its safe handling, transportation, and disposal. The containers must be monitored for radioactive contamination and clearly labeled as to the contents.

Radioactive waste must be properly packaged, labeled, and recorded on the radioactive dumpster log before it is placed in the radioactive waste container for subsequent transfer to HSE-7. The key to the radioactive waste dumpster is kept in the HSE-9 group office. Refer to SOP 85-172 "Disposal of Solid Radioactive Wastes at TA-59" for detailed information.

The HSE-7 Generator Interface Section has the following responsibilities:

- provide engineering and technical support,
- provide training and education,
- maintain a technical data base,
- provide support for storage, transportation, and disposal efforts, and
- take the lead in minimization efforts.

6.15.6. Hazardous Waste Minimization

Generation of chemical waste must be kept as low as reasonably achievable (ALARA). Whenever possible, unopened containers of chemicals should be returned to Chemical Stock (VWR) rather than to the Chemical Waste Coordinator for disposal.

RCRA requires that we no longer generate hazardous waste and then treat it. We must make every effort to reduce the amount initially generated. Waste minimization is the practice that reduces, avoids or eliminates the generation of hazardous waste at the source. This includes the reduction of mass and toxicity. Waste minimization methods are as follows:

- Abatement—substitution of new primary processes and material that alter the wastes and amounts generated.
- General Housekeeping—methods of reducing waste that address the operation of the system. This includes inventory control, process control, waste stream segregation, material management, and spill leak control.
- Reuse—direct reuse of waste streams without altering the stream.
- Recycling—reclamation of value from waste streams by the application of unit processors.
- Treatment—operations on the generated waste stream that reduce the mass, volume, or toxicity of the stream.

6.15.7. Recyclable Materials

Where feasible, chemical wastes should be recycled or salvaged according to the appropriate Laboratory procedures. Those materials listed below are prime recycling candidates.

- Elemental mercury
- Gas cylinders
- Batteries
- Oil or solvents

6.16. Hazardous Material Transport On-Site

6.16.1. Introduction

Shipping and packaging hazardous materials are regulated by federal laws and by DOE orders. An On-Site Transportation Manual has been written that specifies the responsibilities, authorities, requirements, and procedures needed for controlled on-site movement of hazardous materials and wastes

at the Laboratory. The manual applies to any on-site transportation of hazardous materials, including those shipments using roads not accessible to the public.

A copy of this manual is available for use by HSE-9 personnel at TA-35, TA-50, and TA-59. The manual is divided into five sections: administrative, radioactive materials, hazardous materials, explosives, and waste. Specifications are given for packaging, marking, labeling, documenting, transportation methods, and quality assurance.

6.16.2. Policy

The Laboratory requires that on-site transfers of hazardous material be made in a manner that

- Protects the health and safety of employees and the public;
- Protects the material itself;
- Prevents the release of such materials into the environment; and
- Ensures compliance with DOE requirements and regulations.

6.16.3. HAZPACT Coordinators

HSE-3 formed a Hazardous Materials Packaging and Transportation (HAZPACT) Section to provide technical support and assistance to Laboratory personnel involved in packaging hazardous materials for transport on-site and off-site. These personnel and their specialties are listed below. Call them for assistance.

Hazardous Materials Packaging Specialists

Nate King	7-4127	Administrative Radioactive Materials Radioactive Waste
Karen Balo	7-7391	Chemical/Radioactive Waste
Shirley O'Rourke	7-5115	Hazardous Materials
Humberto Martinez	7-6792	Explosives

6.17. Chemical Hazard Communication

6.17.1. Introduction

Activities at Los Alamos National Laboratory may require the use of processes or materials that could endanger the health and safety of personnel if proper precautions are not observed. AR 1-9 and 6-1 set forth the requirements for (1) identifying and evaluating the hazards of chemical,

biological, and physical agents associated with Laboratory operations and for (2) disseminating hazard information to employees exposed to those hazards. The group leader has the overall responsibility to verify that the requirements are met.

6.17.2. Program Elements

The basic elements of the Hazard Communication Program are

- identification and labeling of hazardous materials and operations,
- development, as needed, and maintenance of material safety data sheets (MSDS) for each hazardous material used in the workplace, and
- training of employees in the use of hazardous materials and the existence of hazardous operations in their work area.

An MSDS is written, printed, or electronically transmitted data on the hazards and properties of a particular material, including instructions for safe use.

6.17.3. Evaluation of Operations

The HSE-9 group leader and supervisors must ensure that personnel exposures to hazards are kept as low as reasonably achievable (ALARA). HSE-9 must notify their HSE Division contact before initiating or making major changes in operations involving hazards. HSE Division will help determine the hazards and appropriate control measures for such operations and will conduct follow-up, periodic surveys.

6.17.4. Hazard Notification and Training

HSE-9 employees receive the appropriate information and education on chemicals associated with their work area. They receive such information and education from their section leader upon initial assignment to the group, whenever their assignment changes in a manner that affects their potential for exposure to chemicals, and whenever new chemicals are introduced to the work area. Employees are informed of the location and availability of reference information, such as the ARs, required hazard inventory lists, and MSDS sheets.

Employees must be taught to detect hazards in the workplace, interpret MSDS sheets and other written hazard information, and use specified measures (for example, special work procedures, emergency response procedures, and protective equipment) to control exposure to hazards.

Such training shall include a review of applicable SOPs, specific portions of the Health and Safety Manual, and job-specific education administered by supervisors with assistance from HSE Division. Other appropriate sources of supplemental information shall be included, such as published reports, literature, videotapes, and reference materials.

Contractor employees are informed of the chemical hazards to which they may be exposed in the HSE-9 work areas by the respective section leaders and are advised of the recommended protective measures to reduce or eliminate worker exposure.

6.17.5. Training Support

The Health, Safety, and Environment (HSE) Division provides chemical hazard training for Laboratory managers and first-line supervisors who shall use this information in training those employees exposed to chemicals in the workplace.

6.17.6. Chemical Inventory

HSE-9 performed an initial inventory of approximately 8,000 chemicals. An annual inventory is conducted to account for all chemicals present in the workplace, including reagents, mixtures, solvents, and cleaners. Section leaders are responsible for ensuring that the inventory is kept current. Records of all past inventories are maintained. Employees have access to current inventories at any time during their work hours.

HSE-9 chemical inventory records are available in the Quality Assurance and Data Management Section. These records are auditable and include the following information:

- the identity of each chemical as it is referenced on an appropriate MSDS;
- the Chemical Abstracts Services (CAS) Registry number;
- the location(s) in which the chemicals are present; and
- the estimated quantity of the chemical used annually and the amount currently on hand.

6.17.7. Material Safety Data Sheets

Copies of the required hazard information sheets (MSDS) are maintained for each chemical in the workplace. This information is accessible to employees working in the area. An MSDS will be on file for each manufacturer whose material is present in the workplace, even if more than one manufacturer is supplying the same hazardous material. MSDSs for TA-59 will be available in the Quality Assurance and Data Management Section. TA-35 and TA-50 will have MSDSs for the chemicals located in their areas.

Industrial Hygiene initially distributes the available hazard information sheets to HSE-9 based on the initial inventory. HSE-9 shall obtain any remaining or new MSDSs from the manufacturer. Copies of MSDSs obtained by HSE-9 must be sent to HSE-5 and the Laboratory's main library.

6.17.8. Labeling of Hazardous Materials

Containers of chemicals used in the workplace shall be clearly labeled, tagged, or marked with the (1) identity of the chemical contained within and (2) appropriate hazard warnings. Chemicals transferred from the original container into smaller containers are not required to be labeled except for appropriate identification so long as their subsequent use is limited to the employee who performs the transfer.

In certain situations, the required label information may be contained in operating instructions or other written materials in lieu of affixing labels to individual containers. In such cases, the alternative method is explained to employees working with the chemicals, and the written materials must be readily accessible to those employees.

Section leaders must make sure that labels are kept legible from the time the hazardous materials arrive at the workplace to the time the materials are transferred or disposed of.

6.17.9. Procurement

As specified in AR 1-9, chemicals shall be procured and received only by personnel knowledgeable of the hazards imposed by those chemicals. The requestor must make note in the "Special Handling Information" block on the purchase request that the order involves chemicals, even if the requestor does not consider the chemicals to be hazardous.

6.17.10. Packaging and Transport

Chemicals shall be properly packaged and transported in government vehicles, not in official taxis or private vehicles. Transport of chemicals must be made in accordance with Laboratory regulations.

TABLE OF CONTENTS

7. LABORATORY FIRST AID

7.1. Introduction . . . . . LS 7-3

7.2. Bleeding Aid . . . . . LS 7-3

7.3. Breathing Aid . . . . . LS 7-3

7.3.1. Check for Unresponsiveness . . . . . LS 7-3

7.3.2. Airway Step . . . . . LS 7-3

7.3.3. Quick Step . . . . . LS 7-3

7.3.4. Check Step . . . . . LS 7-4

7.3.5. Hand Position for Chest Compressions . . . . . LS 7-4

7.3.6. Chest Compressions . . . . . LS 7-4

7.3.7. Push 15-Breathe 2 . . . . . LS 7-4

7.3.8. Recheck Pulse . . . . . LS 7-4

7.4. Burn Aid . . . . . LS 7-5

7.4.1. First-Degree Burns . . . . . LS 7-5

7.4.2. Second-Degree Burns . . . . . LS 7-5

7.4.3. Third-Degree Burns . . . . . LS 7-5

7.5. Electric Shock . . . . . LS 7-5

7.6. Eye Aid . . . . . LS 7-6

7.7. Fracture Aid . . . . . LS 7-6

7.8. Poisoning Aid . . . . . LS 7-6

7.8.1. Conscious Victim . . . . . LS 7-6

7.8.2. Unconscious Victim . . . . . LS 7-6

7.8.3. Convulsing Victim . . . . . LS 7-6

7.9. Shock Aid . . . . . LS 7-7

7.10. Skin Aid . . . . . LS 7-7

7. LABORATORY FIRST AID

7.1. Introduction

Generally, treatment of an ill or injured individual should only be undertaken by appropriately trained personnel. In the event of an accident, do whatever is necessary to verify that the injured person is not in danger of further injury. Obtain emergency assistance by dialing 911. If the person is not severely injured and can be easily moved, help can be obtained at HSE-2. There are several people within the group trained in cardiopulmonary resuscitation. If possible, call one of them when this type of immediate aid is needed. A list of CPR trained personnel is posted in the group office, on the bulletin board outside of room 112, and in the section leaders office at TA-50.

7.2. Bleeding Aid

Severe bleeding is best controlled by the application of direct pressure on the wound site. Apply pressure by placing the palm of your hand on a compress (a thick pad of cloth) directly over the open wound. If a compress cannot be found, use your bare hand. Do not disturb clots formed within the pad. If blood soaks through the pad without clotting, use additional pads and continue applying pressure. If there is no evidence of a fracture and the wound is in the arm, hand, or leg, elevation of the wound will help stop the bleeding. Obtain assistance from HSE-2 at 7-7251.

7.3. Breathing Aid

Cardiopulmonary Resuscitation (CPR). Learn it, use it, save a life. The following information is presented as a review for HSE-9 personnel certified in CPR. This information does not take the place of CPR training.

7.3.1. Check for Unresponsiveness

Tap or gently shake the victim and shout, "Are you O.K.?" If no response shout "HELP!" (Someone nearby may be able to assist).

7.3.2. Airway Step

Place one hand on the forehead and push firmly backward. Place the other hand under the neck near the base of the skull and lift gently. Tip the head until the chin points straight up. This should open the airway. Place your ear near the victim's mouth and nose. LOOK at the chest for breathing movements, LISTEN for breaths and FEEL for breathing against your cheek (3 to 5 seconds). If no breathing occurs proceed to the next step.

7.3.3. Quick Step

Give 2 full breaths, one on top of the other. To do this, keep the head tipped and pinch the nose. Open your mouth wide, take a deep breath, and place open mouth over the victim's open mouth making a good seal. Now, give the 2 full quick breaths without waiting in between.

7.3.4. Check Step

Check the victim's carotid pulse for heartbeat (5 to 10 seconds). To do this, keep the head tipped with the hand on the forehead. Place the fingertips of your other hand on the adam's apple, slide your fingers into the groove at the side of the neck nearest you. Tell someone to phone for emergency assistance (911). If there is no pulse, find the correct hand position and position your body to give compressions.

7.3.5. Hand Position for Chest Compressions

- With your middle and index fingers find the lower edge of the victim's rib cage on the side nearest you.
- Trace the edge of the ribs up to the notch where the ribs meet the breastbone.
- Place the middle finger on the notch with the index finger next to it. Put the heel of the other hand on the breastbone next to the fingers.
- Put your first hand on top of the hand on the breastbone. Keep the fingers off the chest.

7.3.6. Chest Compressions

Push straight down without bending your elbows and maintain proper hand position. Keep knees shoulder width apart. Shoulders should be directly over victim's breastbone. Keep hands along midline of body. Bend from the hip, not the knees. Keep fingers off of the chest. Push down about 1 1/2 to 2 inches. Push smoothly.

7.3.7. Push 15-Breathe 2

Give 15 compressions without stopping, at a rate of 80 to 100 per minute, counting out loud, "One and two and three and four and five and six and seven and eight and nine and ten and eleven and twelve and thirteen and fourteen and fifteen and." Push down as you say the number and come up as you say "and."

Next, quickly tilt the victim's head back to lift the jaw, and give 2 full breaths to the victim the same way you gave the first 2 breaths.

Keep repeating—15 compressions, 2 breaths, 15 compressions, 2 breaths, and so on. The complete cycle of 15 compressions and 2 breaths should take from 11 to 14 seconds.

7.3.8. Recheck Pulse

After doing four cycles (or about one minute) of continuous CPR, you should check to see if the victim has a pulse. Do this after giving the 2 breaths at the end of the fourth cycle of 15 compressions and 2 breaths. Tilt the victim's head back and check the carotid pulse for 5 seconds. If there

is no pulse, give 2 breaths and continue CPR (compressions and rescue breaths). Repeat these pulse checks every few minutes.

If you do find a pulse, check for breathing for 3 to 5 seconds. If breathing is present, keep the airway open and monitor breathing and pulse closely. This means that you should look, listen, and feel for breathing while you keep checking the pulse. If there is no breathing, perform rescue breathing and keep checking the pulse.

NOTE: Do not practice chest compressions on people as it could cause internal injuries.

7.4. Burn Aid

Burns are classified by the depth of skin damage. First-degree burns show redness or discoloration of the skin, accompanied by mild swelling and pain. Second-degree burns show a red or mottled appearance, accompanied by blisters and extensive pain. Third-degree burns show deep tissue destruction and a white or charred look with complete loss of all layers of skin. There is usually less pain with serious burns because of destruction of the nerve endings. All burns should be checked by medical personnel.

7.4.1. First-Degree Burns

Submerge the burned area in cold water if possible or apply an ice pack. Apply a dry dressing if necessary. Go to HSE-2 to ensure there is no hidden damage.

7.4.2. Second-Degree Burns

Submerge the burned area in cold water or apply cold water liberally until the pain subsides. Do not break the blisters or remove any tissue. Do not apply an antiseptic preparation, ointment, or spray. Gently blot dry and go to HSE-2 for medical help.

7.4.3. Third-Degree Burns

Summon professional medical help. These burns are best treated by professionals. Do not submerge large burned areas or use cold water as this may increase shock. Cold packs may be used when the burns are to the hands, feet, or face. Do not remove charred clothing. Do not apply ointments, grease or other materials. Keep burned hands or feet elevated. Have the victim with a burned face sit up or prop him up and keep him under constant observation, particularly for breathing problems.

7.5. Electric Shock

Do not touch the victim of a disabling electric shock until you are certain that their body is no longer part of a live circuit. This can be accomplished by opening a switch or circuit breaker. If the victim is breathing, call 911. If the victim is not breathing, begin artificial respiration at once. If no pulse can be detected, initiate

CPR. Have someone who is not administering first aid call for help, or if no one is present, trip the fire alarm, then administer aid as quickly as possible.

7.6. Eye Aid

If a chemical accidently gets into the eye, immediately flush out the eye with water. This is accomplished with the eyewash fountains in each laboratory. In an emergency, water from a beaker can be poured into the eye. Be sure that water gets under the eyelid to wash the entire eye. The victim may need help holding the eye open. Continue washing for at least 15 minutes, or until directed to stop by emergency personnel.

Eyewash stations are to be flushed weekly for at least three minutes to ensure proper functioning and to purge the lines of any accumulated material. Cards are posted at each eyewash station to record the initials of the person flushing the eyewash station and the date that this function was performed.

7.7. Fracture Aid

Do not attempt to treat a fracture unless emergency assistance will not be available for a significant period of time or if it is necessary to transport the victim without emergency assistance. Do not attempt to set a fracture or to push back a protruding bone. If it is necessary to splint a fracture, use anything available to immobilize the fracture and the joints on both sides of the fracture. Do not manipulate or move the fractured area. Do not have the victim test for fracture by having him move or walk. Call HSE-2 at 7-7251.

7.8. Poisoning Aid

7.8.1. Conscious Victim

If the person is conscious and not convulsing, dilute the poison by giving water. If the victim vomits, save a sample for analysis. Get emergency assistance as soon as possible.

7.8.2. Unconscious Victim

Maintain an open airway and give artificial respiration or CPR if necessary. Do not give fluids or induce vomiting. If the victim is vomiting while unconscious, turn the head so the material drains and is not aspirated into the lungs. Save a sample of vomitus for analysis.

7.8.3. Convulsing Victim

Do not attempt to restrain the victim. Move surrounding objects to prevent further injury. After convulsions have stopped, place the victim in the prone position with the head turned to allow fluids to drain. Loosen clothing and watch for airway obstruction. Give artificial respiration or CPR if necessary. Do not force anything between the teeth. Do not give fluids. Do not induce vomiting. If vomiting occurs, save a sample of the vomitus for analysis.

7.9. Shock Aid

Shock is common after an accident and can be fatal as it results in the depression of all bodily functions. The symptoms are pale or bluish skin, moist or clammy skin, rapid (often faint) pulse, increased breathing rate (which may be shallow), weakness, and vomiting. In late stages the victim is apathetic and unresponsive. The eyes are vacant with dilated pupils.

Have the victim lie down and cover him/her with a blanket to prevent chilling. Do not add heat. If there is no head injury, elevate the feet a few inches. If the victim experiences breathing difficulty, lower the feet. Obtain medical assistance.

7.10. Skin Aid

If a hazardous chemical, such as sulfuric acid, is splashed on the skin, it must be washed away immediately. wash under the emergency shower and remove any contaminated clothing. Shield the victim from onlookers. Wash for 15 minutes or until directed to stop by emergency personnel. Emergency showers are located at intervals in the hallway.

*U.S. GOVERNMENT PRINTING OFFICE: 1990-0-773-034/20088