MAY 1997

Los Alamos
NATIONAL LABORATORY
memorandum
Environmental Restoration Project
EM/ER, M992

To/MS: Distribution
Thru/MS: Jorg Jansen, EM/ER, MS M992
From/MS: Dave Bradbury, EM/ER, MS M992
PhoneFAX: 7-0808/5-4747
Symbol: EM/ER:97-147
Date: May 30, 1997

RECEIVED JUN 1997

SUBJECT: DISTRIBUTION OF ER SOPs: LANL-ER-SOP-1.11,R0, LANL-ER-SOP-4.01,R1, LANL-ER-SOP-5.01,R1, AND LANL-ER-SOP-5.03,R0

Attached are documents for insertion in your **controlled copy** of the Environmental Restoration (ER) Project Standard Operating Procedures (SOPs) manual. The documents for this distribution are:

a) LANL-ER-SOP-1.11, R0, Radioactive Waste Management for ER Project Field Operations

b) LANL-ER-SOP-4.01, R1, Drilling Methods and Drill Site Management

c) LANL-ER-SOP-5.01, R1, Monitor Well and RFI Borehole Construction

d) LANL-ER-SOP-5.03, R0, Monitor Well and Borehole Abandonment

e) Table of Contents, Instructions, and Master Distribution List

Please follow the instruction on the Receipt Acknowledgment form to complete all updates. Sign and **return** the Receipt Acknowledgment form to Daleen Hendrickson, MS M707, by June 28, 1997.

If you have any questions on this update, please contact Daleen Hendrickson, ER Controlled Document Coordinator, at 5-1402. If you are no longer on the distribution, or your group has changed names, you will also need to contact Daleen with the current information.

JJ/DH/ss

Attachments: (1) LANL-ER-SOP-1.11, R0
(2) LANL-ER-SOP-4.01, R1
(3) LANL-ER-SOP-5.01, R1
(4) LANL-ER-SOP-5.03, R0
(5) Table of Contents and Instructions

Distribution:
SOP Master Distribution List
EM/ER File, MS M992
RPF, MS M707

13026

LIBRARY COPY

Ro K —
Teri —
Tech. Cop

Environmental Restoration Standard Operating Procedures

Volume I

A Department of Energy
environmental clean-up program

Uncontrolled Copy

Los Alamos

National Laboratory

Standard Operating Procedures (SOPs) for Environmental Restoration

Table of Contents

Volume I and II

Procedure Number	Document Title	Effective Date
LANL-ER-SOP-01- VOL I	*** GENERAL INSTRUCTIONS ***	09/01/95
LANL-ER-SOP-01.01, R0,ICN11	General Instructions for Field Investigations	04/24/95
LANL-ER-SOP-01.02, R0	Sample Container and Preservation	03/16/92
LANL-ER-SOP-01.03, R1	Handling, Packaging and Shipping of Samples	05/05/94
LANL-ER-SOP-01.04, R2,ICN10	Sample Control and Field Documentation	03/03/95
LANL-ER-SOP-01.04,R3	LANL-ER-SOP-01.04,R3 Sample Control and Field Documentation	11/15/95
LANL-ER-SOP-01.05, R0	Field Quality Control Samples	03/16/92
LANL-ER-SOP-01.07, R0	Operational Guidelines For Taking Soil And Water Samples In Explosive Areas	03/21/95
LANL-ER-SOP-01.08, R0	Field Decontamination Of Drilling And Sampling Equipment	03/31/95
LANL-ER-SOP-01.09, R0,ICN13	Management Of Environmental Restoration Radioactive Material Management Areas	11/10/95
LANL-ER-SOP-03- VOL I	*** RECONNAISSANCE / FIELD SURVEYS ***	09/01/95
LANL-ER-SOP-03.01, R1,ICN6	Land Surveying Procedures	01/31/95

Standard Operating Procedures (SOPs) for Environmental Restoration

Table of Contents

Volume I and II

Procedure Number	Document Title	Effective Date
LANL-ER-SOP-03.02. R1	General Surface Geophysics	09/17/93
LANL-ER-SOP-03.04, R0	Petrography	03/16/92
ANL-ER-SOP-03.05, R0	Determination of Volume Constituents in Thin Sections of Rock	03/16/92
LANL-ER-SOP-03.06, R0	Fracture Characterization	03/16/92
LANL-ER-SOP-03.07, R0	Characterization of Lithologic Variations Within the Rock Outcrops of a Volcanic Field	03/16/92
LANL-ER-SOP-03.08, R0	Geomorphic Characterization	05/19/93
LANL-ER-SOP-03.09, R0	Geologic Mapping of Bedrock Units	03/16/92
LANL-ER-SOP-03.10, R0	Trenching and Logging	05/19/93
LANL-ER-SOP-03.11, R0	Coordinating and Evaluating Geodetic Surveys	03/21/95
LANL-ER-SOP-03.12, R0	Field and Laboratory Notebook Documentation for Environmental Restoration Earth Science Studies	11/17/93
LANL-ER-SOP-04- VOL I	*** DRILLING, EXCAVATING, SAMPLING AND LOGGING ***	09/01/95

Standard Operating Procedures (SOPs) for Environmental Restoration

Table of Contents

Volume I and II

Procedure Number	Document Title	Effective Date
LANL-ER-SOP-04.01, R0	Drilling Methods and Drill Site Management	03/16/92
LANL-ER-SOP-04.04, R0	General Borehole Logging	06/25/93
LANL-ER-SOP-05- VOL I	*** WELL INSTALLATION / DEVELOPMENT AND WATER SAMPLING TECHNIQUES ***	09/01/95
LANL-ER-SOP-05.01, R0	Monitor Well Construction	06/01/92
LANL-ER-SOP-05.02, R0	Well Development	06/01/92
LANL-ER-SOP-06- VOL I	*** SAMPLING TECHNIQUES ***	09/01/95
LANL-ER-SOP-06.01, R0	Purging of Wells for Representative Sampling of Ground Water	03/16/92
LANL-ER-SOP-06.02, R0	Field Analytical Measurements of Groundwater Samples	03/16/92
LANL-ER-SOP-06.03, R0	Sampling for Volatile Organics	03/16/92
LANL-ER-SOP-06.04, R0	Sampling Commercial/Municipal/Domestic Wells	03/16/92
LANL-ER-SOP-06.05, R0	Soil Water Samples	03/16/92

Standard Operating Procedures (SOPs) for Environmental Restoration

Table of Contents

Volume I and II

Procedure Number	Document Title	Effective Date
LANL-ER-SOP-06.06, R0	Tensiometer (Soil Suction Monitor) Installation and Measurement	03/16/92
LANL-ER-SOP-06.09, R0,ICN7	Spade and Scoop Method for Collection of Soil Samples	02/01/95
LANL-ER-SOP-06.10, R0	Hand Auger and Thin-Wall Tube Sampler	03/16/92
ANL-ER-SOP-06.11, R0	Stainless Steel Surface Soil Sampler	03/16/92
LANL-ER-SOP-06.13, R0	Surface Water Sampling	03/16/92
LANL-ER-SOP-06.14, R0,ICN9	Sediment Material Collection	02/17/95
LANL-ER-SOP-06.15, R0	Coliwasa Sampler for Liquids and Slurries	03/16/92
LANL-ER-SOP-06.16, R0	Thief Sampler for Dry Powders or Granules	03/16/92
LANL-ER-SOP-06.17, R0	Trier Sampler for Sludges and Moist Powders or Granules	03/16/92
LANL-ER-SOP-06.18, R0	Collection of Sand, Packed Powder, or Granule Samples Using the Hand Auger	03/16/92
LANL-ER-SOP-06.19, R0	Weighted Bottle Sampler for Liquids and Slurries in Tanks	03/16/92
ANL-ER-SOP-06.21, R0	Volatile Organic Sampling Train	03/16/92

Standard Operating Procedures (SOPs) for Environmental Restoration

Table of Contents

Volume I and II

Procedure Number	Document Title	Effective Date
LANL-ER-SOP-06.22, R0	Canister Sampling for Organics - EPA Method T0-14	03/16/92
LANL-ER-SOP-06.23, R0	Measurement of Gamm-Ray Fields using a Sodium Iodide Detector	05/19/93
\NL-ER-SOP-06.24, R0	Sample Collection from Split-Spoon Samplers and Shelby Tube Samplers	05/19/93
LANL-ER-SOP-06.25, R0	Total Suspended Particulate Air Sampling	06/25/93
LANL-ER-SOP-06.26, R0	Core Barrel Sampling for Subsurface Earth Materials	05/19/93
LANL-ER-SOP-06.27, R0	Subsurface Vapor Sampling Using Soil Gas Probes and Single Downhole Packers	09/27/95
LANL-ER-SOP-06.28, R0	Chip Sampling of Porous Surfaces	09/20/94
LANL-ER-SOP-06.29, R0	Single-Stage Sampling for Surface Water Run-Off	09/17/93
LANL-ER-SOP-07- VOL II	*** SUBSURFACE HYDROGEOLOGICAL SITE CHARACTERIZATION ***	09/01/95
LANL-ER-SOP-07.01, R0	Pressure Transducers	03/16/92
LANL-ER-SOP-07.02, R0	Fluid Level Measurements	03/16/92

Standard Operating Procedures (SOPs) for Environmental Restoration

Table of Contents

Volume I and II

Procedure Number	Document Title	Effective Date
LANL-ER-SOP-07.03, R0	Well Slug Tests	03/16/92
LANL-ER-SOP-07.04, R0	Aquifer Pumping Tests	03/16/92
LANL-ER-SOP-09- VOL II	*** GEOCHEMISTRY ***	09/01/95
LANL-ER-SOP-09.01, R0	Thin Section Preparation	03/16/92
LANL-ER-SOP-09.02, R0	Operating the Microprobe	03/16/92
LANL-ER-SOP-09.03, R0	Operation of Siemens X-Ray Diffractometer	03/16/92
LANL-ER-SOP-09.04, R0	Calibration and Alignment of the Siemens Diffractometers	03/16/92
LANL-ER-SOP-09.05, R0	Clay Mineral Separation for X-Ray Diffraction Analysis	03/16/92
LANL-ER-SOP-09.06, R0	Zeolite Purification and Separation	03/16/92
LANL-ER-SOP-09.07, R0	Operating Instructions for International Scientific Instruments Model DS-130 Scanning Electron Microscope and Tracor Northern Series II X-Ray Analyzer	03/16/92
LANL-ER-SOP-09.09, R0	Certification of Standards for Electron Microanalysis	03/16/92

Standard Operating Procedures (SOPs) for Environmental Restoration

Table of Contents

Volume I and II

Procedure Number	Document Title	Effective Date
LANL-ER-SOP-10- VOL II	*** FIELD SCREENING TECHNIQUES ***	09/01/95
LANL-ER-SOP-10.01, R0	Screening of PCBs in Soil	03/16/92
LANL-ER-SOP-10.04, R1	Fidler Instrument System	05/05/94
.NL-ER-SOP-10.05, R0,ICN3	Field Analysis of Total Hydrocarbons Using the Hanby Method	03/24/94
LANL-ER-SOP-10.06, R0	High Explosives Spot Test	05/31/95
LANL-ER-SOP-10.07, R0	Field Monitoring for Surface and Volume Radioactivity Levels	09/20/94
LANL-ER-SOP-10.10,R0	Radiation Scoping Surveys	11/27/95
LANL-ER-SOP-11- VOL II	*** GEOTECHNICAL ANALYSIS ***	09/01/95
LANL-ER-SOP-11.01, R0	Measurement of Bulk Density, Dry Density, Water Content, and Porosity in Soil	03/16/92
LANL-ER-SOP-11.02, R0	Particle Size Distribution of Soil/Rock Samples	03/16/92
LANL-ER-SOP-11.03, R0	Permeability of Granular Soils	03/16/92
ANL-ER-SOP-11.04, R0	Soil and Core pH	03/16/92

Standard Operating Procedures (SOPs) for Environmental Restoration

Table of Contents

Volume I and II

Procedure Number	Document Title	Effective Date
LANL-ER-SOP-11.05, R0	Total Organic Carbon	03/16/92
LANL-ER-SOP-11.06, R0	Cation-Exchange Capacity	03/16/92
ANL-ER-SOP-12- VOL II	*** CURATORIAL MANAGEMENT ACTIVITIES ***	09/01/95
LANL-ER-SOP-12.01, R1	Field Logging, Handling, and Documentation of Borehole Samples	05/25/94
LANL-ER-SOP-12.02, R1	Transportation, Receipt, and Admittance of Borehole Samples for the Sample Management Facility	05/25/94
LANL-ER-SOP-12.03, R0	Acceptance of Non-Borehole Samples by the Sample Management Facility	05/25/94
LANL-ER-SOP-12.04, R1	Physical Processing and Storage of Borehole Samples at the Sample Management Facility	03/10/95
LANL-ER-SOP-12.05, R1	Examination of Samples at the Sample Management Facility	03/10/95
LANL-ER-SOP-14- VOL II	*** GROSS MEASUREMENTS OF RADIOACTIVITY IN SOILS ***	09/01/95
LANL-ER-SOP-14.01, R0	Berthold Low Alpha and Beta Activity Counter Calibration, Quality Control, Detection Limit, and Use	08/10/93

LOS ALAMOS

ENVIRONMENTAL RESTORATION PROGRAM INTERIM CHANGE NOTICE

EFFECTIVE DATE : (Dist. Date) 4/27/95 ICN No. 011 Page 1 of 1

Document No. LANL-ER-SOP-01.01 **Rev.** 0 **Title:** General Instructions for Field Investigations

Reason for Change:

Attachment B, SOP Training Documentation Check List has been superseded by Attachments C and D in LANL-ER-AP-05.2, R1, Determination, Completion, and Documentation of Environmental Restoration Worker Training. Attachment C is Read Training Documentation Form, and Attachment D is ES&H Training Checklist.

Description of Change (Specify page, paragraph, and/or section revised, and clearly write new text to be incorporated in the document).

Page 2, Section 2.2.
Change "SOP Training Documentation Check List (Attachment B)" to "LANL-ER-AP-05.2, R1, Determination, Completion and Documentation of Environmental Restoration Worker Training, Attachment C, Read Training Documentation Form, and Attachment D, ES&H Training Checklist."

Page 7, Section 6.2.
Change "SOP Training Documentation Check List (Attachment B)" to "LANL-ER-AP-05.2, R1, Attachments C and D."

Page 9, Section 7.0.
Add: LANL-ER-AP-05.2, R1, Determination, Completion, and Documentation of Environmental Restoration Worker Training.

Page 9, Section 8.0.
Delete "SOP Training Documentation Check List" and replace with "LANL-ER-AP-05.2, R1, Attachment C, Read Training Documentation Form, and Attachment D, ES&H Training Checklist."

Page 9, Section 9.0.
Delete "Attachment B, SOP Training Documentation Check List."

Change Requested by:	KATHY ARMSTRONG (Print)	(Signature)	4-24-95 (Date)
Functional Reviewer	TRACY G. GLATZMAIER (Print)	(Signature)	4/24/95 (Date)
Program Manager Approval:	TRACY G. GLATZMAIER (Print) for	(Signature) for	4/24/95 (Date)
Quality Program Project Leader (QA review and approval)	LARRY SOUZA (Print)	(Signature)	4/24/95 (Date)

UNCONTROLLED

Los Alamos National Laboratory **Environmental Restoration Program** **Standard Operating Procedure**	No: LANL-ER-SOP-1.01 Rev: 0 Interim Procedure

General Instructions for Field Investigations

Prepared by Sandra E. Wagner (Print Name) Sandra E. Wagner (Signature) 2-27-92 (Date)

Quality Review by Larry Maassen (Print Name) Larry Maassen (Signature) 28 Feb 92 (Date)

Technical Review by Paul L. Hamodt (Print Name) Paul L. Hamodt (Signature) March 3, 1992 (Date)

PM Approval Robert W Vocke (Print Name) Robert W Vocke (Signature) March 4, 1992 (Date)

QPPL Approval Karen L Warthen (Print Name) Karen L Warthen (Signature) 3/4/92 (Date)

Effective Date: 3-16-92

UNCONTROLLED

General Instructions for Field Investigations

Table of Contents

1.0 PURPOSE 2

2.0 SCOPE 2
- 2.1 Applicability 2
- 2.2 Training 2

3.0 DEFINITIONS, RESPONSIBILITIES, AND ACRONYMS 2

4.0 BACKGROUND AND/OR CAUTIONS 4

5.0 EQUIPMENT 4

6.0 PROCEDURE 5
- 6.1 Premobolization Activities 5
- 6.2 Mobilization to the Site 6
- 6.3 Data Collection Activities 7
- 6.4 Sample Media Evaluation 8

7.0 REFERENCES 9

8.0 RECORDS 9

9.0 ATTACHMENTS 9

UNCONTROLLED

General Instructions for Field Investigations

1.0 PURPOSE

The purpose of this procedure is to provide an overview of instructions regarding activities to be performed before, during, and after field investigations. These activities and associated Standard Operating Procedures (SOPs) are shown in the Field Activity Flow Chart in Attachment A.

2.0 SCOPE

2.1 Applicability

This procedure will be used by all site workers for all Environmental Restoration (ER) program field operations.

2.2 Training

All site workers will document on the SOP Training Documentation Check List (Attachment B) that they have read and understand this procedure, other procedures in Section 1.0, General Instructions, and other appropriate SOPs.

3.0 DEFINITIONS, RESPONSIBILITIES, AND ACRONYMS

A. Operable Unit Project Leader (OUPL): Responsible for all Resource Conservation and Recovery Act (RCRA) investigations concerning the assigned OU, ensuring site workers are trained, readiness reviews performed, and appropriate regulators, Department of Energy (DOE) and LANL offices are informed of sampling events.

B. Field Team Leader (FTL): Responsible for implementing the Sampling and Analysis Plan (SAP) and the project specific Quality Assurance Project Plan (QAPjP), ensuring that site workers have the required Health and Safety (HS) training, and assisting the OUPL in ensuring that training to applicable SOPs is accomplished.

C. Radiation Protection Technician: Responsible for monitoring radiation levels onsite. The Radiation Protection Technicians are trained Health Physics Operations (HS-1 group or approved designee) personnel.

D. Industrial Hygienist: Responsible for monitoring industrial hygiene conditions affecting site worker health and safety. Industrial hygienists are trained Industrial Hygiene (HS-5 group or approved designee) personnel.

UNCONTROLLED

E. Health and Safety Project Leader (H&SPL): The H&SPL is responsible for reviewing the OU-specific H&S Plan to determine if all requirements for the health and safety of site workers, Laboratory personnel, and contractors are addressed.

The H&S PL coordinates with ER, HS-1, Occupational Medicine Group (HS-2), Safety and Risk Assessment Group (HS-3), and HS-5 for resources for the implementation of the requirements of the H&S plan.

F. Site Safety Officer (SSO): HS-5 personnel (or their approved designee) responsible for worker health and safety; for example, ensuring that assigned workers are physically fit, that the required safety practices are observed, and that workers are monitored for health protection on site. (See Annex III, Section 5, IWP for functional reporting).

G. Field Team Members (FTM): May include Los Alamos National Laboratory (LANL) personnel, contractors, and subcontractors. They will be responsible for safely conducting the assigned field work in a manner that collects technically valid and legally defensible data.

H. Site Worker: Summary term for all of the above referenced individuals.

I. Technical Team Leader (TTL): Responsible for his/her team's involvement with integrating the team's technologies and methodologies, both new and existing, into the ER Program, including ensuring appropriate training is obtained.

J. HAZCAT: Hazard Categorization: A set of simple field procedures that enhances the safe handling and legal transportation of unknown materials. It does not take the place of a full laboratory analysis. The use of HAZCAT procedures will determine the correct Department of Transportation (DOT) shipping category for a sample.

K. Radiological Screening: A set of radiological measurements to be made prior to shipment of materials off site.

L. SCF: Sample Coordination Facility

M. SCF Coordinator: Responsible for coordinating the ER program's sample collection activities and sample analysis.

UNCONTROLLED

N. Exclusion Zone: The Exclusion Zone is considered to be the area onsite of highest potential for hazardous material exposure, into which access is restricted.

O. Contamination Reduction Zone: The Contamination Reduction Zone (CRZ) is designed to eliminate the spread of contaminated materials between the Exclusion and Support Zones on-site. A CRZ will be established around each Exclusion Zone so that the Exclusion Zone is completely isolated from the Support Zone.

P. Support Zone: The Support Zone includes those areas on-site outside the Exclusion and Contamination Reduction Zones and is considered to be the area of minimal potential risk of exposure to hazardous materials.

Q. Analytical Levels Appropriate to Data uses:

Level I - Total organic or inorganic vapors are detected using portable instruments such as Photoionization Detectors (PIDs). Field test kits for metals are also included in this level.

Level II - A variety of organics are detected using a field Gas Chromatograph, inorganics are detected with field instruments including Atomic Absorption Spectrophotometer and X-ray Fluorescence Spectrophotometer. The analysis provides tentative analyte specific identification.

Level III - Organic and inorganic compounds are determined using EPA procedures other than Contract Laboratory Program (CLP) and can be analyte specific.

Level IV - Pertains to non-conventional parameters and may include modification of existing methods. The detection limits are method-specific.

4.0 BACKGROUND AND/OR CAUTIONS

N/A

5.0 EQUIPMENT

N/A

UNCONTROLLED

6.0 PROCEDURE

6.1 Premobolization Activities

A. The OUPL or OUPL designee will conduct a readiness review meeting before field events that implement RFI sampling plans. The attendees will be, at a minimum, and as appropriate, the following site workers:

- FTL and field team managers, if appropriate,
- Industrial Hygienist,
- H&SPL
- SSO
- TTL(s), and
- SCF Supervisor.

If individuals in the positions above are unable to attend, a designee should be present.

The readiness review meeting will, at a minimum, ensure that

- appropriate site workers are scheduled and available,
- applicable plans and procedures for use during field events are assembled,
- sample containers, labels, and documentation material (e.g., forms, pens, tape, etc.) are accessible,
- appropriate analytical laboratories are notified and prepared for incoming samples,
- equipment is available for sampling event, and
- responsibilities applicable to specific subject areas (i.e., H&S, SOPs, etc.) are evaluated and that supplies and equipment are obtained by appropriate individuals.
- attendance at readiness review meetings will be documented (Attachment C is an example of an attendance form).

Additionally, appropriate regulators, DOE personnel, and LANL offices will be invited to attend.

UNCONTROLLED

B. Site workers will review the procedures presented in this document as well as all other Section 1.0, General Instructions, Standard Operating Procedures (SOPs). In addition, site workers will review SOPs, SAPs, and H&S Plans that are specific to the field effort.

C. The OUPL is responsible for contacting LANL divisions, subcontractors, and regulatory agencies. The ER Community Relations TTL is informed of the intent to mobilize for a an RFI so that he/she will be prepared to answer media questions. Field materials are organized and carefully loaded for transportation to the site, and site workers prepare to mobilize to the site.

6.2 Mobilization to the Site

A. Once on site, separate areas may be designated by the FTL, with SSO approval, for operations management and analytical needs. These may include but are not limited to the following:

1. Data Management Area: A central area that is sheltered from weather will be set up in the support zone for temporarily retaining all documentation generated during the field effort until requested by the OUPL.

2. Sample Management Area: An area that is sheltered from weather may be set up in the support zone. All sampling equipment for the field event will be stored here when not in use, (this includes spare sample containers, identification labels, coolers, field screening equipment, etc.). In addition to sampling equipment, samples will be handled in this area after screening results have been received. Samples will be stored here until they can be sent to the SCF to ensure that chain of custody is not broken..

3. Screening Area: An area sheltered from weather that is used for the purpose of rapidly field screening sample material for radiological and chemical contamination using analytical Levels I, II, and V. This area can be provided in the field by EM-9 and may be located in the contamination reduction zone. All samples, decontaminated sampling equipment, and materials will be stored here until screening results have been received. Samples will be handled at this location to reduce the potential of contamination from the surface of the container. In addition, excess media (soil, cores, sediment, biota, etc.) will be stored in this area until screening results have been received and media can be transferred to the curation staging area or disposed of as waste.

4. Curation Staging Area: A specified area in the support zone that is sheltered from the weather and is used to temporarily store excess media that meets curation criteria as defined in the SOPs in Section 12.0,

UNCONTROLLED

Curatorial Management Activities, and that may be used in future analyses. The media will be transferred to a permanent curation storage facility from this area. This area will be provided by EES.

5. Field Analytical Laboratory: An area designated for analyzing samples may be set up in the support zone. This area will be sheltered from the weather and will contain field analytical instruments. This area will be provided by EM-9. . The function of this laboratory is to provide on-site analytical capabilities up to Level III Analysis.

6.3 Data Collection Activities

A. One copy of all LANL-ER-SOPs in Section 1.0, General Instructions, will be kept on site in the data management area at all times and will be made available to all site workers. All site workers must have documented on the SOP Documentation Check List (Attachment B) that they have read and understand these procedures.

B. FTL or designee will conduct daily by reviewing the site-specific Health and Safety Plan. All site workers will attend as well as any subcontractors participating in any part of the field effort.

C. Calibrate equipment in accordance with procedures described in the site-specific SAP, LANL-ER SOPs, or in the equipment instruction manual.

D. Document all activities relating to the progress of the RFI. The following mandatory forms are provided by the SCF and will be used for field documentation and sample identification, and will be completed daily. See LANL-ER-SOP-01.04, Sample Control and Field Documentation, for specific information to be included on these documents.

1. Daily Activity Log: The FTL is responsible for completing this log and will record all information pertinent to the investigation on it.

2. Unique Sample Identification (ID) Number Stickers: A sheet of sample ID number stickers will be provided for each sample collected. Each sheet will have at least ten sample stickers with identical numbers. The number series will be unique to each sheet of sample stickers and, therefore, will be unique for each sample. All sample control will be through the unique ID number.

3. Sample Labels: Preprinted sample labels provide sample information. A sample label will be attached to every sample that is collected. The SCF will accept only those samples with affixed sample labels.

UNCONTROLLED

4. Sample Collection Log: A Sample Collection Log will be completed for every sample suite collected. All information pertaining to specific samples in a suite is recorded on this log.

5. Chain-of-Custody/Request for Analysis Forms: A Chain-of-Custody/Request for Analysis form will accompany every sample(s) and every shipment of samples to the SCF in order to establish the documentation necessary to trace sample possession from the time of collection to final disposition. The SCF will accept only those samples accompanied by a Chain-of-Custody/Request for Analysis Form.

6. Custody Seals: A custody seal will be placed over the lid of each sample container. For 40 millimeter vials, the seal will not be placed over the septa; instead, wrap the seal horizontally around the bottle and lid. Binding tape will be placed around the sample shipping container, and a custody seal will be placed over the binding tape. Custody seals will be signed and dated by a member of the sampling team.

E. Field documentation will be submitted daily to the field files located in the Data Management Area. Data will be reviewed daily by the FTL, and signed, as appropriate.

F. A representative portion of the media collected will be used for Radiological and HAZCAT Screening.

G. Waste generated during the field effort will be managed according to LANL-ER-SOP-1.06, Management of RFI-Generated Waste. For general questions pertaining to waste handling, contact EM-7, at 665-4000.

UNCONTROLLED

6.4 Sample Media Evaluation

A. Where an on-site screening area is available, a representative portion of the media collected will be screened before the samples are preserved (See LANL-ER-SOP-01.02, Sample Containers and Preservation) and delivered to the SCF for packaging and shipment to the designated laboratory(ies) (See LANL-ER-SOP-01.03, Handling, Packaging and Shipping of Samples).

   If the samples are not screened on site, the sample will be preserved in the Contamination Reduction Zone and sent to the SCF promptly after collection and will be screened for radioactive and hazardous constituents at the facility. After the samples are screened, they will be packaged and shipped to designated laboratory(ies).

B. If the screening results indicate that the excess material meets the curation criteria, it will be packaged and temporarily stored at the curation staging

area on-site until it can be transferred to a permanent curation storage facility. If curation is unnecessary or if it does not meet curation criteria, the excess material will be dealt with as waste per LANL-ER-SOP-1.06, Management of RFI-Generated Waste.

C. The designated laboratory receiving the samples will analyze the samples and report the results to the SCF. The SCF will validate the data and transfer the results to the OUPL. These results will used in determining further corrective actions.

D. The OUPL is responsible for ensuring that copies of all records and data generated as a result of the field investigation and readiness review are sent to the ER Records Processing Facility per LANL-ER-AP-2.01, Procedure for Environmental Restoration Records Management.

UNCONTROLLED

7.0 REFERENCES

LANL-ER-AP-2.01, Procedure for Environmental Restoration Records Management
LANL-ER-SOP-1.01, General Instructions for Field Personnel
LANL-ER-SOP-1.02, Sample Containers and Preservation
LANL-ER-SOP-1.03, Handling, Packaging, and Shipping
LANL-ER-SOP-1.04, Sample Control and Field Documentation
LANL-ER-SOP-1.05, Field Quality Control
LANL-ER-SOP-1.06, Management of RFI-Generated Waste

8.0 RECORDS

Readiness Review Attendance Documentation
SOP Training Documentation Check List

9.0 ATTACHMENTS

Attachment A - Field Activity Flow Chart
Attachment B - SOP Training Documentation Check List
Attachment C - Readiness Review Attendance Form

FIELD ACTIVITY FLOW CHART

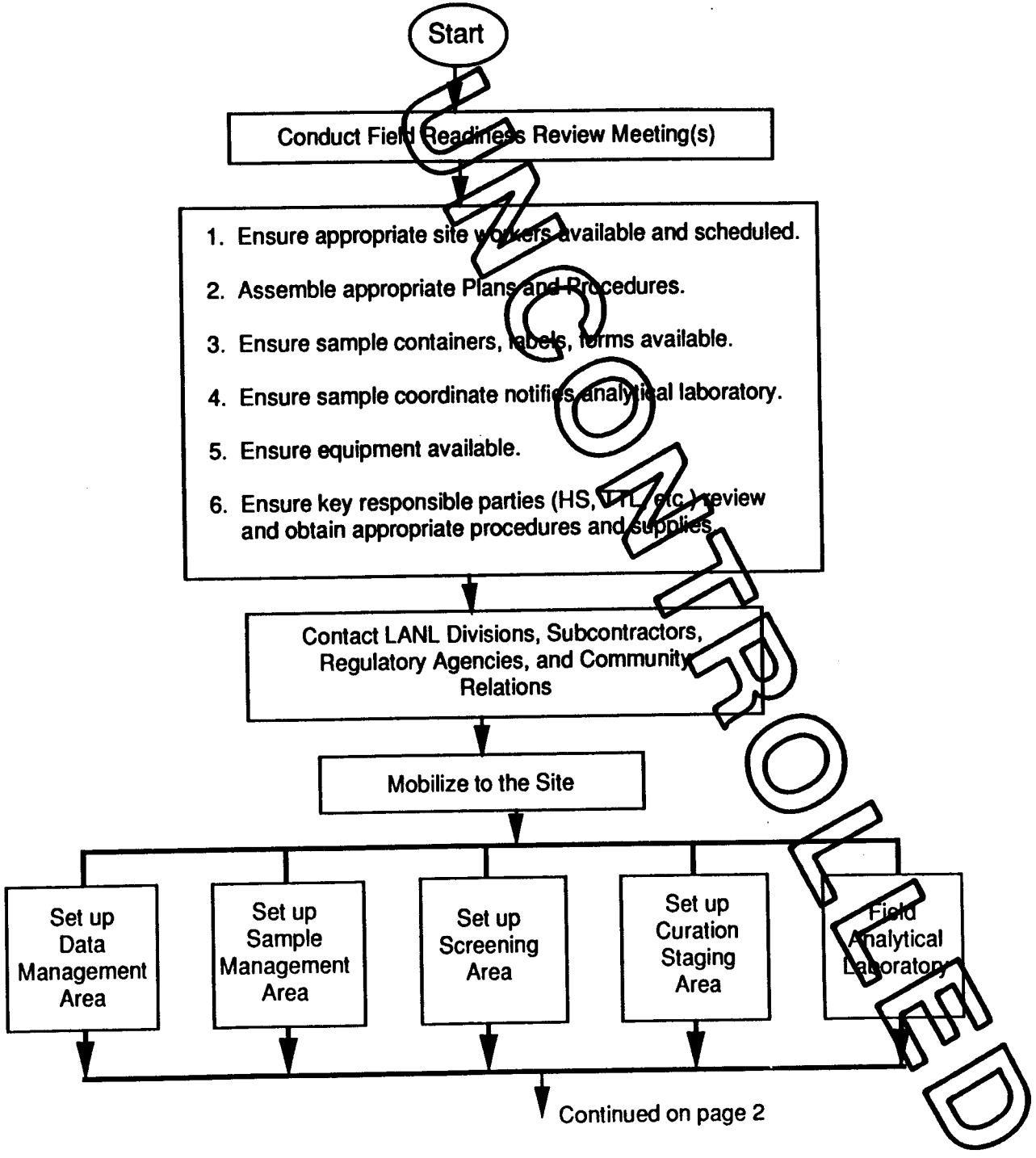

UNCONTROLLED

Los Alamos National Laboratory Environmental Restoration
FIELD ACTIVITY FLOW CHART (continued)

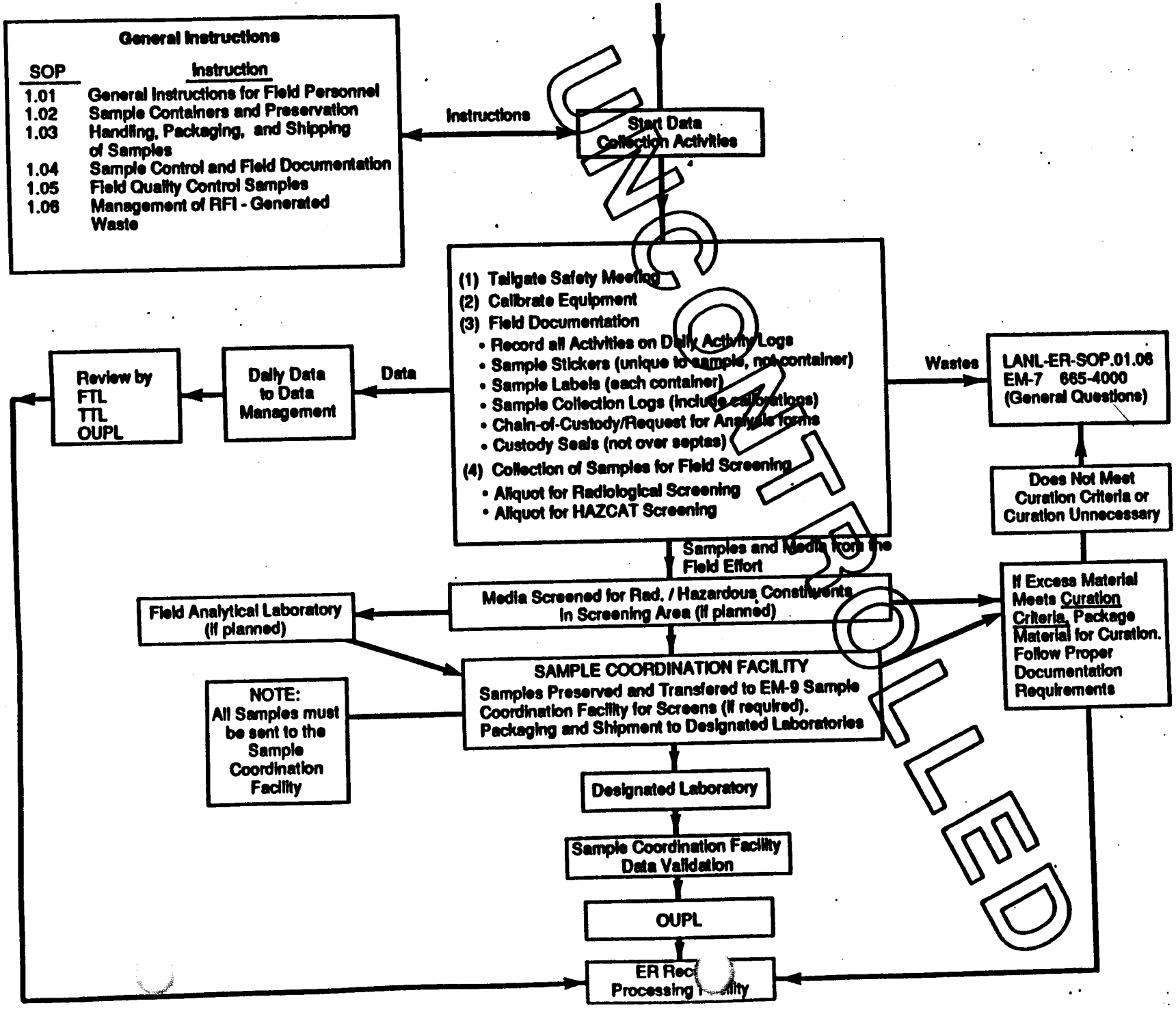

UNCONTROLLED

Los Alamos National Laboratory
Environmental Restoration SOP Training Documentation Check List

Date: _____ Sheet ____ of ____

Technical Area _____

Operable Unit _____

Signature of FTL: _____

Site Work Plan: _____

Your initials next to a procedure indicates that you have read and understood the procedure.

____ SOP-1.01, General Instructions for Field Investigations

____ SOP-1.02, Sample Containers and Preservation

____ SOP-1.03, Handling, Packaging, and Shipping of Samples

____ SOP-1.-04, Sample Control and Field Documentation

____ SOP-1.05, Field Quality Control Samples

____ SOP-1.06, Management of RFI-Generated Waste

UNCONTROLLED
EXAMPLE
CONTACT THE ER PROGRAM OFFICE (665-4557) TO OBTAIN ORIGINAL FOR YOUR USE

Additional procedures:

_____

_____

_____

_____

_____

_____

Name: _____

Signature: _____

Date: _____

Employer: _____

Los Alamos National Laboratory Environmental Restoration
READINESS REVIEW MEETING ATTENDANCE FORM

Page 1 of _____

SUBJECT: _____

OBJECTIVE(S): _____

Meeting conducted by:

_____ _____ _____
Print Name Signature Date

UNCONTROLLED
EXAMPLE
CONTACT THE ER PROGRAM OFFICE (665-4557) TO OBTAIN ORIGINAL FOR YOUR USE

PRINTED NAME	SIGNATURE	ORGANIZATION/MS	PHONE
		/MS	
		/MS	
		/MS	
		/MS	
		/MS	
		/MS	
		/MS	
		/MS	
		/MS	
		/MS	
		/MS	
		/MS	
		/MS	
		/MS	
		/MS	
		/MS	

Los Alamos National Laboratory Environmental Restoration
READINESS REVIEW MEETING ATTENDANCE FORM
(continuation form)

Page _____ of _____

SUBJECT: _____ DATE: _____

PRINTED NAME	SIGNATURE	ORGANIZATION/MS	PHONE
		/MS	
		/MS	
		/MS	
		/MS	
		/MS	
		/MS	
		/MS	
		/MS	
		/MS	
		/MS	
		/MS	
		/MS	
		/MS	
		/MS	
		/MS	
		/MS	
		/MS	
		/MS	
		/MS	
		/MS	
		/MS	

UNCONTROLLED
EXAMPLE
CONTACT THE
ER PROGRAM OFFICE
(665-4557) TO OBTAIN
ORIGINAL FOR YOUR USE

Los Alamos National Laboratory **Environmental Restoration Program** Standard Operating Procedure	No: LANL-ER-SOP-01.02 Rev: 0

Sample Containers and Preservation

UNCONTROLLED

Preparer:	Sandra Wagner (Print Name)	Sandra Wagner (Signature)	1-24-91 (Date)
Quality Review by:	Larry Maassen (Print Name)	Larry Maassen (Signature)	2-1-92 (Date)
Technical Review by:	John J. Miglio (Print Name)	John J Miglio (Signature)	2/18/92 (Date)
Technical Review by:	Paul L. Aamodt (Print Name)	Paul L Aamodt (Signature)	March 3, 1992 (Date)
QPPL Approval:	Karen L. Warthen (Print Name)	Karen L Warthen (Signature)	2/27/92 (Date)
PM Approval:	Robert W Vocke (Print Name)	Robert W Vocke (Signature)	March 4, 1992 (Date)

Effective Date: 3-16-92

Sample Containers and Preservation

Table of Contents

1.0 PURPOSE 2

2.0 SCOPE 2
- 2.1 Applicability 2
- 2.2 Training 2

3.0 DEFINITIONS/ACRONYMS 2

4.0 BACKGROUND AND/OR CAUTIONS 3

5.0 EQUIPMENT 3

6.0 PROCEDURE 3
- 6.1 Containing Procedures 4
- 6.2 Sample Preservation 5
- 6.3 Holding Time 6

7.0 REFERENCES 6

8.0 RECORDS 7

9.0 ATTACHMENTS 7

UNCONTROLLED

Sample Containers and Preservation

1.0 PURPOSE

This procedure describes specific requirements for sample containers, preservation techniques and holding times as specified by field regulations and guidance documents.

2.0 SCOPE

2.1 Applicability

This procedure is applicable to all Environmental Restoration (ER) activities involving the collection and preservation of samples that will be shipped to the Los Alamos National Laboratory Sample Coordination Facility (SCF) for subsequent chemical or physical testing.

2.2 Training

The Field Team Leader (FTL) is responsible for the implementation of this procedure and the FTL and field team members must document that they have read and understand this procedure and the other procedures in Section 1.0, General Instructions.

UNCONTROLLED

3.0 DEFINITIONS/ACRONYMS

A. ASTM: American Society for Testing and Materials

B. CLP: Contract Laboratory Program

C. DOT: U.S. Department of Transportation

D. EPA: U.S. Environmental Protection Agency

E. Holding time: The elapsed time between sample collection and initiation of laboratory analysis. The holding time is from date of sampling to date of analysis, not the date the designated laboratory receives the sample.

F. IATA: International Air Transport Association

G. RCRA: Resource Conservation and Recovery Act

H. RFI: RCRA Facilities Investigation

I. SCF: Sample Coordination Facility

J. SW-846: EPA approved test methods for Solid Waste identified in EPA-SW-846.

K. TCLP: Toxicity Characteristic Leaching Procedure (Method 1311), which is a codified (40CFR Parts 261, 264, 265, 268, 271, and 302) procedure.

4.0 BACKGROUND AND/OR CAUTIONS

The use of specific types of sample container and preservation techniques is mandatory for hazardous site investigations because the integrity of any sample is diminished over time. Physical factors (light, pressure, temperature, etc.), chemical factors (changes in pH, volatilization, etc.), and biological factors may alter the original quality of the sample. Because the various target parameters are uniquely altered at varying rates, distinct sample containers, preservation techniques, and holding times have been established to maintain sample integrity for a reasonable and acceptable period of time.

The volume of sample collected should be sufficient to perform all the required analyses, plus an additional amount to provide for any quality control needs, split samples, or repeat examinations. The volumes, preservatives, and holding times listed in Attachments A through F are the EPA requirements. Since the SCF operated by EM-9 will be either performing the analyses or making arrangements for the analyses, sampling schedules and sample needs must be coordinated with the SCF prior to sampling.

All proposed ER Program sampling plans are reviewed at the SCF for adherence to sampling protocols mandated by all applicable EPA regulations and analytical methods. The Sampling and Analysis Plan (SAP) will address the proper analytical protocol. SW-846 provides test procedures and guidance which are recommended for use in conducting the evaluations and measurements needed to comply with the RCRA (Public Law 94-850). These methods are approved by EPA to satisfy the data requirements of 40 CFR 120-270. The topics of concern include the sampling schedule, proper sample sizes and containers, correct preservation techniques, chain-of-custody requirements, and transportation of samples to the SCF. Appendix O of the Los Alamos National Laboratory Installation Work Plan details the duties of the SCF.

UNCONTROLLED

5.0 EQUIPMENT

Equipment needed to implement this procedure is listed on the Equipment and Supplies Check List for Sample Containers and Preservation (Attachment G).

6.0 PROCEDURE

A. Contact the SCF for guidance and assistance in obtaining the proper sample containers and preservatives.

B. Refer to an Operable Unit (OU)-specific SAP for site-specific procedures for sample containers and preservation. In addition, follow the protocols established in EPA's SW-846, Test Methods for Evaluation of Solid Waste.

C. Record all pertinent comments and any deviations on the Daily Activity Log per LANL-ER-SOP-01.04.

D. Contact the SCF for guidance and acquisition of the proper sample containers.

1. Identify the containers required for analysis by matrix as shown in Attachments A through F (for example, amber glass, narrow-mouth bottles for polychlorinated biphenyl [PCB] analysis of water samples).

   a. Based on information in the SAP, choose a sample container that is nonreactive with the sample and the particular analytical parameter to be tested.

   b. Use glass or fluorocarbon resin containers with samples analyzed for organic compounds to prevent the introduction of extraneous organic compounds, such as those that might be leached from plastic containers.

   c. The rigid plastic screw caps for the bottles must be Teflon lined to prevent contamination of the sample.

2. Calculate and order the number of each type of container required by including duplicates and blanks with the number of investigative samples specified in the OU-specific SAP.

3. Acquire a sufficient number of containers to ship the proper sample volume. For example, Department of Transportation (DOT) and International Air Transport Authority (IATA) regulations limit the size of a sample container to 16 oz if the contents may include hazardous materials. In this case, two 500-ml or four 250-ml containers would be required to ship a 1-liter fluid sample.

4. Adhere to DOT regulations for on-site transfer of samples to the SCF over public-access roads. Refer to SOP-01.03, Handling, Packaging, and Shipping of Samples, for additional information.

6.1 Containing Procedures

A. If soil, sludge or wastes are submitted to the laboratory in containers other than those in which they were collected, the container should be glass, wide mouth bottles with a Teflon cap liner. For specific methods, see Attachment D.

B. If soil samples are submitted to the laboratory in the sample equipment in which they were collected, the container must have the end covered with Teflon or aluminum foil, have a plastic cap placed over the end, and have the cap taped in place. This procedure reduces the chance for loss of moisture or volatile organic compounds (VOCs).

UNCONTROLLED

C. The type and size of container used for water samples and aqueous waste samples varies based on the type of analysis to be performed. Refer to Attachments A and B for specific information on water sample containers and Attachment C for information on aqueous waste sample containers.

D. Sample containers received from SCF will be precleaned to EPA specifications before they are sent to the site. A certificate of cleanliness will be retained by the SCF, with a copy provided with the containers.

6.2 Sample Preservation

A. Regardless of the sample type or container, unless site-specific guidelines state otherwise, samples collected for chemical analysis should be preserved by placing them in an insulated container (cooler) and maintained on ice (ice in bags or chemical "blue" ice) at 4° Centigrade (C).

B. Avoid freezing the sample by wrapping it in bubble pack to isolate from the "blue" ice.

C. Containers for water samples and aqueous waste may arrive at the OU site from the SCF with the proper type and amount of preservatives in them. If so, do not prerinse or overfill.

D. If on-site preservation of aqueous samples is necessary, the proper reagents should be provided to field team members in an easily usable form that can be added at the time of sampling. Reagents that are designated as hazardous by the DOT Hazardous Materials Table, Title 49 Code of Federal Regulations (CFR) 172.101, are shipped pursuant to the appropriate DOT regulations.

E. If using an acid or base preservative, check the pH adjustment with pH paper.

F. Preservation required for the specific analyses requested for aqueous samples may be determined by using Attachments A through C, or by consulting the referenced documents.

G. Solid sediment and solid waste for chemical analysis will always be preserved on ice to 4°C. See Attachments D through F.

H. A sufficient amount of ice should be brought to the field to ensure proper sample cooling immediately following collection. A temperature of 4°C must be maintained until the samples arrive at the SCF.

I. The temperature shall be checked and recorded at the laboratory to determine if preservation has been accomplished.

UNCONTROLLED

6.3 Holding Time

A. Analyze samples as soon as possible after collection.

B. Some parameters are required to be analyzed in the field (refer to Attachment A).

C. Allowable holding times are listed and are the maximum times that samples are considered valid, based on available guidance (see Attachments A through F).

D. The OU-specific maximum holding times will be listed in the RFI Workplan.

E. Holding times for SW-846 methods start when the sample is collected. Both the sampler and the laboratory use this time/date.

F. Holding times for the Contract Laboratory Program (CLP) methods for the samples is the day of collection. The laboratory date is date received at the designated laboratory. Delayed shipping will result in missed holding time for the data. Transfer the samples to the SCF as soon as possible.

7.0 REFERENCES

The following procedures are directly associated with this procedure and should be reviewed before field operations commence:

LANL-ER-SOPs in Section 1.0, General Instructions
LANL-ER-SOP-02.07, General Equipment Decontamination
LANL-ER-SOP-06.03, Sampling for Volatile Organics

Title 40 CFR Part 261

Title 49 CFR Part 172.101

EPA (U.S. Environmental Protection Agency), 1982. "Handbook for Sampling and Sample Preservation of Water and Wastewater." Report EPA-600/4-82-029. Washington, D.C.

EPA (U.S. Environmental Protection Agency), 1983. "Methods for Chemical Analysis of Water and Wastes." Report EPA-600/4-79-020. Washington, D.C.

EPA (U.S. Environmental Protection Agency), 1983. "Manual of Groundwater Quality Sampling Procedures." Report EPA/600/2-81-160. Washington, D.C.

EPA (U.S. Environmental Protection Agency), 1986. "Test Methods for Evaluating Solid Waste." Report EPA-SW-846. Washington, D.C.

UNCONTROLLED

EPA (U.S. Environmental Protection Agency), 1985. "Practical Guide for Groundwater Sampling." Report EPA/600/2-85/104. U.S. Government Printing Office, Washington, D.C.

EPA (U.S. Environmental Protection Agency), 1986. "RCRA Groundwater Monitoring Technical Enforcement Guidance Document." Document OSWER-9950.1. U.S. Government Printing Office, Washington, D.C.

EPA (U.S. Environmental Protection Agency) Region IV, 1991. "Environmental Compliance Branch Standard Operating Procedures and Quality Assuarance Manual," Appendix A, Environmental Services Division, Athens, Georgia

Korte, Nic, and Peter Kearl, 1985. "Procedures for the Collection and Preservation of Groundwater and Surface Water Samples and for the Installation of Monitoring Wells. Second Edition." U.S. Department of Energy Report GJ/TMC-08 Technical Measurements Center, Grand Junction Project Office, Grand Junction, Colorado

Williams, M.C., 1990. Handbook for Sample Collection, Preservation, Instrumental Techniques. Los Alamos National Laboratory Report LA-11738-M, Los Alamos, New Mexico

UNCONTROLLED

8.0 RECORDS

A. Completed Chain-of-Custody/Request for Analysis Form

B. Completed Daily Activity Log

9.0 ATTACHMENTS

A. Recommendation for Sampling and Preservation of Water Samples According to Measurement (Low- to Medium-Contaminant Concentration Samples)

B. Sampling and Preservation Procedures for RCRA Groundwater Detection Monitoring

C. Containers for Aqueous Waste Samples

D. Preservation Plan for Soil/Sediment Samples

E. Sample Containers for Waste

F. Preservation Plan for Soil/Sediment Waste Samples

G. Equipment and Supplies Check List for Sample Containers and Preservation

RECOMMENDATION FOR SAMPLING AND PRESERVATION OF WATER SAMPLES ACCORDING TO MEASUREMENT[a] (LOW TO MEDIUM CONTAMINANT CONCENTRATION SAMPLES)

Measurement	Volume Requirement millimeter (ml)	Container[b,c]	Preservative[d,e]	Holding Time[f,g]
Physical Properties				
Color	50	P,G	Ice[h]	48 hrs
Specific Conductance	100	P,G	Ice	24 hrs
Hardness	100	P,G	HNO_3 to pH<2	6 mos
Odor	200	G only	Ice	24 hrs
pH	25	P,G	N/A	Determine on site
Residue				
Filterable	100	P,G	Ice	7 days
Nonfilterable	100	P,G	Ice	7 days
Total	100	P,G	Ice	7 days
Volatile	100	P,G	Ice	7 days
Settleable Matter	1000	P,G	Ice	48 hrs
Temperature	1000	P,G	N/A	Determine on site
Turbidity	100	P,G	Ice	48 hrs
Metals (except Mercury and Chromium^{+6})				
Dissolved	200	P,G	Filter on site HNO_3 to pH<2	6 mos 6 mos[i]
Suspended	200	P,G	Filter on site	6 mos
Total	100	P,G	HNO_3 to pH<2	6 mos
Chromium^{+6}	200	P,G	Ice	24 hrs
Mercury				
Dissolved	100	P,G	Filter HNO_3 to pH<2	28 days
Total	100	P,G	HNO_3 to pH<2	28 days

UNCONTROLLED

RECOMMENDATION FOR SAMPLING AND PRESERVATION OF WATER SAMPLES ACCORDING TO MEASUREMENT[a] (LOW TO MEDIUM CONTAMINANT CONCENTRATION SAMPLES) (Continued)

Measurement	Volume Requirement (ml)	Container[b,c]	Preservative[d,e]	Holding Time[f,g]
		Inorganics, Nonmetallics		
Acidity	100	P,G	Ice	14 days
Alkalinity	100	P,G	Ice	14 days
Bromide	100	P,G	None Required	28 days
Chloride	100	P,G	None Required	28 days
Chlorine	200	P,G	N/A	Determine on site
Cyanides	500	P,G	Cool 4°C Ice NaOH to pH>12 0.6 g ascorbic acid	14 days
Fluoride	300	P,G	Ice	28 days
Iodide	100	P,G	Ice	24 hrs
Nitrogen				
Ammonia	400	P,G	Ice H_2SO_4 to pH<2	28 days
Nitrogen, Total Kjeldahl	500	P,G	Ice H_2SO_4 to pH<2	28 days
Nitrate Plus Nitrite	100	P,G	Ice H_2SO_4 to pH<2	28 days
Nitrate[i]	100	P,G	Ice	48 hrs
Nitrite	50	P,G	Ice	48 hrs
Dissolved Oxygen				
Probe	300	G bottle and top	N/A	Determine on site
Winkler	300	G bottle and top and store in dark	Fix on site	8 hrs
Phosphorus				
Orthophosphate, Dissolved	50	P,G	Filter on site, Ice	48 hrs
Hydrolyzable	50	P,G	Ice H_2SO_4 to pH<2	28 days

UNCONTROLLED

RECOMMENDATION FOR SAMPLING AND PRESERVATION OF WATER SAMPLES ACCORDING TO MEASUREMENT[a] (LOW TO MEDIUM CONTAMINANT CONCENTRATION SAMPLES) (Continued)

Measurement	Volume Requirement (ml)	Container[b,c]	Preservative[d,e]	Holding Time[f,g]
Total, Dissolved	50	P,G	Filter on site, Ice H_2SO_4 to pH<2	24 hrs
Silica	50	P only	Ice	28 days
Sulfate	50	P,G	Ice	28 days
Sulfide	50	P,G	Ice 2 ml zinc acetate(2N) NaOH to pH >9	24 hrs
Sulfite	100	P,G	N/A	Determine on site
		Organics		
BOD	1,000	P,G	Ice	48 hrs
COD	50	P,G	Ice H_2SO_4 to pH<2	28 days
Oil and Grease	1,000	P,G	Ice H_2SO_4 to pH<2	28 days
Organic Carbon	25	P,G	Ice H_2SO_4 or HCl to pH<2	28 days
Phenolics	500	G only	Ice H_2SO_4 to pH<2	28 days
Cyanides	1,000	P,G	Ice 40% NaOH to pH>12 0.6 g ascorbic acid	14 days
Coliform, Fecal, and Total	250	P,G	Ice Sterile	6 hrs
Oil and Grease	1,000	G	Ice H_2SO_4 to pH<2	28 days
Organic Carbon	25	P,G	Ice H_2SO_4 to pH<2	28 days
Phenols	1,000	G, Teflon™-lined cap	Ice	7 days until extraction; 40 days after extraction
Total Organic Halogen and Purgeable Aromatics	40	G, vial with Teflon™-lined septum	Ice 0.008% $Na_2S_2O_3$[j]	14 days

UNCONTROLLED

RECOMMENDATION FOR SAMPLING AND PRESERVATION OF WATER SAMPLES ACCORDING TO MEASUREMENT[a]
(LOW TO MEDIUM CONTAMINANT CONCENTRATION SAMPLES)
(Continued)

Measurement	Volume Requirement (ml)	Container[b,c]	Preservative[d,e]	Holding Time[f,g]
Purgeable Aromatics	40	G, vial with Teflon™-lined septum	Ice 0.008% $Na_2S_2O_3$[k]	14 days
Acrolein and Acrylonitrile	1,000	G, Teflon™-lined septum	Ice 0.008% $Na_2S_2O_3$[k]	14 days
Phenols	1,000	G, Teflon™-lined cap	Ice	7 days until extraction; 40 days after extraction
Benzidines	1,000	G, Teflon™-lined cap	Ice 0.008% $Na_2S_2O_3$[k]	7 days until extraction; 40 days after extraction
Phthalate Esters	1,000	G, Teflon™-lined cap	Ice 0.008% $Na_2S_2O_3$[k]	7 days until extraction; 40 days after extraction
Nitrosamines	1,000	G, Teflon™-lined cap	Ice store in dark 0.008% $Na_2S_2O_3$[k]	7 days until extraction; 40 days after extraction
Nitroaromatics and Isophorone	1,000	G, Teflon™-lined cap	Ice	7 days until extraction; 40 days after extraction
Polynuclear Aromatic Hydrocarbons	1,000	G, Teflon™-lined cap	Ice	7 days until extraction; 40 days after extraction
Haloethers	1,000	G, Teflon™-lined cap	Ice	7 days until extraction; 40 days after extraction
Chlorinated Hydrocarbons	1,000	G, Teflon™-lined cap	Ice	7 days until extraction; 40 days after extraction

UNCONTROLLED

RECOMMENDATION FOR SAMPLING AND PRESERVATION OF WATER SAMPLES ACCORDING TO MEASUREMENT[a] (LOW TO MEDIUM CONTAMINANT CONCENTRATION SAMPLES) (Continued)

Measurement	Volume Requirement (ml)	Container[b,c]	Preservative[d,e]	Holding Time[f,g]
Tetrachlorodibenzo-p-dioxin	1,000	G, Teflon™-lined cap	Ice	7 days until extraction; 40 days after extraction
		Pesticides and PCBs		
Pesticides and PCBs	1,000	G, Teflon™-lined cap	Ice	7 days until extraction; 40 days after extraction
		Radiological Tests		
Alpha, Beta and Radium	1,000	P,G	HNO_3 to pH<2	No limit
Tritium	25	G	None	No limit
Isotopic Uranium	500	P	HNO_3 to pH<2	No limit
^{90}Sr	1,000	P	HNO_3 to pH<2	No limit
^{238}Pu	500	P,G	HNO^3 to pH<2	No limit
^{239}Pu	500	P,G	HNO^3 to pH<2	No limit
^{137}Cs	500	P,G	HNO^3 to pH<2	No limit
^{241}Am	500	P,G	HNO^3 to pH<2	No limit

[a]More specific instructions for preservation and sampling are found with each applicable SAP. A general discussion about sampling water and industrial wastewater is found in EPA Region IV (1991); EPA (1986); and EPA (1985).

[b]Container Types:

P = Plastic (polyethylene)
G = Glass
T = Fluorocarbon resins (PTFE, Teflon™, FEP or PFA)
PP = Polypropylene

UNCONTROLLED

[c]Shipping containers (cooling chest with ice or ice pack) should be certified as to the 4°C temperature at the time of sample placement into these containers. Preservation of samples requires that the temperature of collected samples be cooled to 4°C upon collection of sample and during shipment. Field personnel will check the temperature in the container at the time of shipping and ice the samples to maintain a cool temperature during shipment. Maximum-minimum thermometers can be placed into the shipping chest to record temperature history. Chain-of-custody forms will include the temperature in the container at the time of shipment and at delivery to the laboratory in addition to in-transit (maximum) temperature, if available.

[d]Sample preservation should be performed immediately upon sample collection. For composite samples, each aliquot should be preserved at the time of collection. When use of an automated sampler makes it impossible to preserve each aliquot, samples may be preserved by cooling to 4°C until compositing and splitting are completed.

[e]When any sample is to be shipped by common carrier or sent through the United States mail, it must comply with the DOT Materials Regulations (49 CFR Part 172). The SCF is responsible for ensuring compliance. For preservation requirements, the Office of Hazardous Materials, Materials Transportation Bureau, Department of Transportation has determined that the Hazardous Materials Regulations do not apply to the following material: Hydrochloric acid (HCl) in water solutions at concentrations of 0.22% by weight or less, with pH less than 2.0 but greater than or equal to 1.0.

[f]Samples should be analyzed as soon as possible after collection. The times listed are the maximum periods that samples may be held and still be considered valid. Samples may be held for longer periods only if the permittee, or analytical laboratory, has data on file to show that the specific types of samples under study are stable for a longer time and has received a variance from the EPA Regional Administrator.

[g]Maximum holding time is 24 hours when sulfide is present. Optional testing of all samples with lead acetate paper before the pH adjustment will determine if sulfide is present. If sulfide is present, it can be removed by adding of cadmium nitrate powder until a negative spot test is obtained. The sample is filtered and the pH is adjusted to 12 with NaOH.

[h]Shipping containers (cooling chest with ice or ice pack) should be verified as to the 4°C temperature at the time of sample placement into these containers. Preservation of samples requires that the temperature of collected samples be cooled to 4°C upon collection of sample and during shipment. Field personnel will check the temperature in the container at the time of shipping and ice the samples to maintain a cool temperature during shipment. Chain-of-custody forms will include the temperature in the container at the time of shipment and at delivery to Laboratory.

[i]Samples should be filtered on site immediately, before adding preservative for dissolved metals.

UNCONTROLLED

[j]For samples from nonchlorinated drinking water supplies, concentrated H_2SO_4 should be added to lower sample pH to less than 2. The sample should be analyzed within 14 days.

[k]Should only be used in the presence of residual chlorine.

[l]Use ml volume requirements for water and gram requirements for media other than liquids.

[m]No preservation for media other than water.

UNCONTROLLED

SAMPLING AND PRESERVATION PROCEDURES FOR RCRA GROUNDWATER DETECTION MONITORING[a]

Parameter	Minimum Volume Required for Analysis (ml)	Recommended Container[b,c]	Preservative[d,e]	Maximum Holding Time[f,g]
		Indicators of Groundwater Contamination[h]		
pH	25	T,P,G	Field determined	None
Specific Conductance	100	T,P,G	Field determined	None
Total Organic Carbon	4 x 15	G, amber, T-lined cap[f]	Ice	28 days HCl to pH<2
Total Organic Halogen	4 x 15	G, amber, T-lined septa or caps	Ice, add 1.1M sodium sulfite	7 days
		Groundwater Quality Characteristics		
Chloride	50	T, P, G	Ice	28 days
Iron Manganese Sodium	200	T, P	Field acidified to pH <2 with HNO_3	6 months
Phenols	500	G	Ice/H_2SO_4 to pH <2	28 days
Sulfate	50	T, P, G	Ice	28 days
		Drinking Water Characteristics		
Arsenic Barium Cadmium Chromium	500 500	T, P	Total Metals Field acidified to pH <2 with HNO_3	6 months 6 months
			Dissolved Metals	
Lead Mercury Selenium Silver	500	T,P T,P T,P Dark Bottle	Field filtration Acidify to pH <2 with HNO_3	6 months

UNCONTROLLED

SAMPLING AND PRESERVATION PROCEDURES FOR RCRA GROUNDWATER DETECTION MONITORING[a] (Continued)

Parameter	Minimum Volume Required for Analysis (ml, unless noted otherwise)	Recommended Container[b,c]	Preservative[d,e]	Maximum Holding Time[f,g]
Fluoride	300	T, P	Ice	28 days
Nitrate/Nitrite[i]	1,000	T, P, G	Ice/H_2SO_4 to pH <2	14 days
Endrin Lindane Methoxychlor Toxaphene 2,4 Dichlorophenol 2,4,5 Trichlorophenol Silvex	2,000	T, G	Ice	7 days
Radium Gross Alpha Gross Beta	1 gallon	P, G pH <2 with HNO_3	Field acidified to	6 months
Coliform bacteria	200	PP, G (sterilized)	Ice	6 hours
		Other Groundwater Characteristics of Interest[h]		
Cyanide	250	P, G pH >12. 0.6 g ascorbic acid[j]	Ice, NaOH to	14 days
Oil and Grease	1,000	G only pH <2	Ice H_2SO_4 to	28 days
Semivolatile, Nonvolatile Organics	60	T, G	Ice	14 days
Volatiles	60	G, T-lined	Ice	14 days

[a]References:

EPA (U.S. Environmental Protection Agency) 1986. "Test Methods for Evaluating Solid Waste - Physical/Chemical Methods," Report EPA-SW-846 (3rd edition). Washington, D.C.

EPA (U.S. Environmental Protection Agency) 1983. "Methods for Chemical Analysis of Water and Wastes," Report EPA-600/4-79-020. Washington, D.C.

"Standard Methods for the Examination of Water and Wastewater," 16th edition (1985).

UNCONTROLLED

[b]Container Types:

P = Plastic (polyethylene)
G = Glass
T = Fluorocarbon resins (PTFE, Teflon™, FEP or PFA)
PP = Polypropylene

[c]Shipping containers (cooling chest with ice or ice pack) should be certified as to the 4°C temperature at the time of sample placement into these containers. Preservation of samples requires that the temperature of collected samples be cooled to 4°C upon collection of sample and during shipment. Field personnel will check the temperature in the container at the time of shipping and ice the samples to maintain a cool temperature during shipment. Maximum-minimum thermometers can be placed into the shipping chest to record temperature history. Chain-of-custody forms will include the temperature in the container at the time of shipment and at delivery to the laboratory in addition to in-transit (maximum) temperature, if available.

[d]Sample preservation should be performed immediately upon sample collection. For composite samples, each aliquot should be preserved at the time of collection. When use of an automated sampler makes it impossible to preserve each aliquot, samples may be preserved by cooling to 4°C until compositing and splitting are completed.

[e]When any sample is to be shipped by common carrier or sent through the United States mail, it must comply with the DOT Materials Regulations (49 CFR Part 172). The SCF is responsible for ensuring compliance. For preservation requirements, the Office of Hazardous Materials, Materials Transportation Bureau, Department of Transportation has determined that the Hazardous Materials Regulations do not apply to the following material: Hydrochloric acid (HCl) in water solutions at concentrations of 0.22% by weight or less, with pH less than 2.0 but greater than or equal to 1.0.

[f]Maximum holding time is 24 hours when sulfide is present. Optionally, all samples may be tested with lead acetate paper before the pH adjustment to determine if sulfide is present. If sulfide is present, it can be removed by adding of cadmium nitrate powder until a negative spot test is obtained. The sample is filtered and then the pH is adjusted to 12 with NaOH.

[g]Based on the requirements for detection monitoring (40 CFR 265.93), the owner/operator must collect a sufficient volume of ground water to allow for the analysis of four separate replicates.

[h]Do not allow any headspace in the container.

[i]For samples from nonchlorinated drinking water supplies, concentrated H_2SO_4 should be added to lower sample pH to less than 2. The sample should be analyzed within 14 days.

[j]Use ascorbic acid only in the presence of oxidizing agents.

UNCONTROLLED

CONTAINERS FOR AQUEOUS WASTE SAMPLES[a]

Analyte	Sample Container	Sample Volume	Preservative[b,c]	Holding Time(days)
Hazardous Substance List (HSL) Volatile	G vials (2)	40 ml	Ice	14
HSL Base/Neutral/ Acid[d]	Amber G	1 l	Ice	7/40[e]
HSL Pesticide/PCB	Amber G	1 l	Ice	7/40[e]
HSL Inorganic[f]	P,G	1 l	pH<2,w/HNO_3	180
Non-HSL Metals[g]	P,G	1 l	pH<2,w/HNO_3	180
Cyanide	P,G	0.5 l	pH>11,w/NaOH	14
pH[h]	P,G	N/A	None	N/A
Specific Conductivity[h]	P,G	N/A	None	N/A
Temperature[h]	P,G	N/A	None	N/A
Dissolved Oxygen[h]	G	N/A	None	N/A
Total Dissolved Solids (TDS)	P,G	0.1 l	Ice	7
Total Suspended Solids (TSS)	P,G	0.1 l	Ice	7
Total Phosphate	P,G	1 l	Ice, pH<2, w/H_2SO_4	28
Chloride, Sulfate	P,G	1 l	Ice	28
Carbonate/ Bicarbonate[i]	P,G	1 l	Ice	14
Nitrate	P,G	1 l	Ice	2
Hexavalent Chromium	P,G	1 l	Ice	24

[a]Reference:

1. EPA (U.S. Environmental Protection Agency) 1986. "Test Methods for Evaluating Solid Waste," Report EPA SW-846 (3rd edition). Washington, D.C.

[b]All samples, with the exception of those for total metals, will be filtered within four hours of sample collection and preservatives will be added to the filtrate as specified.

UNCONTROLLED

[c]All samples will be kept at 4°C after arrival at the Laboratory.

[d]The HSL base/neutral/acid fractions analytical parameters are the HSL semivolatiles.

[e]Extract within 7 days; analysis within 40 days of extraction.

[f]Includes cesium, molybdenum, and strontium, which are non-HSL metals, but are analyzed using the same methods.

[g]Includes Target Analyte List (TAL) Metals

[h]Field measurements.

[i]These are reported as carbonate and biocarbonate alkalinity.

UNCONTROLLED

PRESERVATION PLAN FOR SOIL/SEDIMENT SAMPLES

Analyte	Sample Volume (mL)	Sample Container[f]	Method	Preservative	Holding Time (days)
Volatile Organics	5	40-ml vial (2) with Teflon™-lined silicon rubber septum	Ref. 2	Ice	14
Base/Neutral/Acid Extractable Organics	10-30	Amber G, 1 l	Ref. 3	Ice	7/40[a]
Organochlorine Pesticide/PCB	10-30	Amber G, 1 l	Ref. 4	Ice	7/40[a]
HSL Inorganic[b]	200	P, G, 1 l	Ref. 5	Ice	180
Non-HSL Metals[c]	200	P, G, 1 l	SW-846	Ice	180
Reactivity	---	Amber G	Ref. 6	Ice	N/A
Chloride	20	G, 1 l	EPA 300.0[d]	Ice	N/A
Sulfate	20	G, 1 l	EPA 300.0[d]	Ice	N/A
Nitrate	20	G, 1 l	EPA 300.0[d]	Ice	N/A
Cyanide	200	G, 1 l	Ref. 1	Ice	14
Hexavalent Chromium	100	G, 1 l	S.M. 312b[e]	Ice	1

[a]Extract within 7 days; analysis within 40 days of extraction.

[b]Includes cesium, molybdenum, and strontium, which are non-HSL metals, but are analyzed using the same methods.

[c]Includes Target Analyte List (TAL) metals

[d]Soil/sediments will be leached with laboratory reagent water (20 grams (g) soil to 50 ml water) and water extract will be analyzed using the procedure in "Methods for Chemical Analysis of Water and Wastes," 1983; EPA 600/4-79-020.

[e]Soil/sediment will be leached with laboratory reagent water (5 g soil and 100 ml of water) by shaking for 2 hours, and the water extract will be filtered and subsequently analyzed. This is in accordance with method 312B in Standard Methods for the Examination of Water and Wastewater, 16th Edition, 1985.

[f]Container types:
P = Plastic (polyethylene)
G = Glass

UNCONTROLLED

Method References

Ref. 1. Method 9010 - "Test Methods for Evaluating Solid Wastes," EPA report EPA-SW-846, Office of Solid Waste and Emergency Response, Washington, D.C. 20460, Revised September 1986.

Ref. 2. Method 8240 - "Test Methods for Evaluating Solid Wastes," EPA report EPA-SW-846, Office of Solid Waste and Emergency Response, Washington, D.C. 20460, Revised September 1986.

Ref. 3. Method 8270 - "Test Methods for Evaluating Solid Wastes," EPA report EPA-SW-846, Office of Solid Waste and Emergency Response, Washington, D.C. 20460, Revised September 1986.

Ref. 4. Method 8080 - "Test Methods for Evaluating Solid Wastes," EPA report EPA-SW-846, Office of Solid Waste and Emergency Response, Washington, D.C. 20460, Revised September 1986.

Ref. 5. Method 6010 or 7000 Series Methods - "Test Methods for Evaluating Solid Wastes," EPA report EPA-SW-846, Office of Solid Waste and Emergency Response, Washington, D.C. 20460, Revised September 1986.

Ref. 6. Method 9010 or 9030 Series Methods - "Test Methods for Evaluating Solid Wastes," EPA report EPA-SW-846, Office of Solid Waste and Emergency Response, Washington, D.C. 20460, Revised September 1986.

UNCONTROLLED

SAMPLE CONTAINERS FOR WASTE[a]

Waste Type	Recommended Container	Closure	Analysis
Photosensitive wastes: 1,000 or 2,000 ml	Amber HDPE[b] or amber glass caps with Teflon™ liners for glass bottles	Teflon™ caps for HDPE bottles; Bakelite	Waste characterization per 40 CFR Part 261
Pesticides: hydrocarbon chlorinated; hydro-carbons; petroleum distillates	Wide-mouth, borosilicate glass bottles 1,000 or 2,000 ml	Bakelite caps with Teflon™ liner	Waste characterization per 40 CFR Part 261
Oil wastes	HDPE bottles, wide mouth, 1,000 or 2,000 ml	Teflon™ caps	Waste characterization per 40 CFR Part 261
Strong alkali or hydrofluoric acid	HDPE bottles, 1,000 ml	Teflon™ caps, wide mouth	Waste characterization per 40 CFR Part 261
Aqueous waste--characterization of organics	Borosilicate glass bottles 1,000 or 2,000 ml	Caps with Teflon™ liner	Waste characterization per 40 CFR Part 261
Solids (sludge, soils, and granular)	8-oz wide-mouth glass bottle	Bakelite caps with Teflon™ liners	Waste characterization per 40 CFR Part 261

UNCONTROLLED

[a]References

1. Title 40 CFR Part 261.

2. EPA (U.S Environmental Protection Agency) 1986. "Test Methods for Evaluating Solid Waste," Report EPA SW-846 (3rd edition). Washington, D.C.

b High Density Polyethylene (HDPE).

PRESERVATION PLAN FOR SOIL/SEDIMENT WASTE SAMPLES

Analyte	Sample Container	Sample Volume	Preservation	Holding Time (days)
HSL Volatile	40 ml vials (2)	5 g	Ice	14
TCLP Volatile	40 ml vials (2)	5 g	Ice	14
HSL Base/Neutral/ Acid[a]	Amber G	10-30 g	Ice	7/40[b]
TCLP Semivolatiles	Amber G	10-30g	Ice	7/40[b]
HSL Pesticide/PCB	Amber G	10-30 g	Ice	7/40[b]
TCLP Pesticides/ Herbicides	Amber G	10-30g	Ice	7/40[b]
HSL Inorganic[c]	P,G	200 g	Ice	180
Non-HSL Metals[d]	P,G	200 g	Ice	180
TCLP Metals	P,G	200g	Ice	180
Reactivity	Amber G	100 g	Ice	N/A
EP Toxicity	Amber G	100 g	Ice	N/A
Chloride	G[e]	20 g	Ice	N/A
Sulfate	G[e]	20 g	Ice	N/A
Nitrate	G[e]	20 g	Ice	N/A
Cyanide	G	200 g	Ice	14
Hexavalent Chromium	P,G[f]	1,000 g	Ice	24

[a]The HSL base/neutral/acid fractions analytical parameters are the HSL semivolatiles.

[b]Extract within 7 days; analysis within 40 days of extraction.

[c]Includes cesium, molybdenum, and strontium, which are non-HSL metals, but are analyzed using the same methods.

[d]Includes Target Analyte List (TAL) Metals

[e]Soil/sediments will be leached with laboratory reagent water (20 g soil to 50 ml water) and water extract will be analyzed using referenced procedure. Procedure references: "Methods for Chemical Analysis of Water and Wastes," 1983; EPA 600/4-79-020.

UNCONTROLLED

[f]Soil/sediment will be leached with laboratory reagent water (5 g soil and 100 ml of water) by shaking for 2 hours. The water extract is filtered and subsequently analyzed. This is in accordance with method 312B in "Standard Methods for Examination of Water and Wastewater," 15th Edition, 1985

UNCONTROLLED

EQUIPMENT AND SUPPLIES CHECK LIST FOR SAMPLE CONTAINERS AND PRESERVATION

UNCONTROLLED

Forms

_____ Sample Collection Logs

_____ Daily Activity Log

_____ Chain-of-Custody/Request for Analysis Form

Sample Containers, as appropriate

_____ Narrow-mouth amber glass bottles with Teflon™-lined caps (0.5, 1, and 2 liters)

_____ Amber glass vials with Teflon™ septa (40 ml)

_____ 250-ml sterile bottle

_____ Wide-mouth polyethylene bottles (0.5, 1, and 2 liters)

_____ New or cleaned polyethylene narrow-mouth bottles (1 l,.10 l, 500 ml, 125 ml, and 60 ml)

Sampling Materials

_____ Ballpoint pen (indelible dark ink)

_____ Felt-tip marker pen (indelible dark ink)

_____ 1-14 pH indicator paper

_____ Ascorbic acid crystals

_____ Disposable surgical gloves (latex, PVC, other suitable plastic, or rubber)

_____ NaOH pellets

_____ Disposable wipes

_____ Crystalline $Na_2S_2O_3$

_____ Methanol and deionized water in Teflon™ wash bottles

EQUIPMENT AND SUPPLIES CHECKLIST FOR SAMPLE CONTAINERS AND PRESERVATION (Continued)

_____ Concentrated HNO_3, H_2SO_4, and HCl

_____ Temperature probe

_____ Clipboards

_____ Deionized water

_____ Duct tape

_____ Wooden tongue depressors

_____ Aluminum foil

_____ Teflon™ tape

_____ Paper towels

<u>Shipping Materials (acquire from Sample Coordinator Facility)</u>

_____ Cardboard boxes

_____ Ice

_____ Blue Ice or equivalent

_____ Insulated coolers

_____ Heavy-duty poly bags and ties

_____ Strapping tape

_____ Plastic trashcan liners

_____ Canvas bags

_____ Parafilm

_____ Padding for packaging of samples

_____ Ziplock® bags

_____ Bubble pack

_____ Unique sample sticker sheets

_____ Chain-of-Custody/Request for Analysis forms

UNCONTROLLED

EQUIPMENT AND SUPPLIES CHECKLIST FOR SAMPLE CONTAINERS AND PRESERVATION (Continued)

_____ Sample labels

_____ Custody seals or custody tape

_____ Other equipment specified in EPA Methods, as needed

UNCONTROLLED

Los Alamos National Laboratory **Environmental Restoration Program** Standard Operating Procedure	No: LANL-ER-SOP-01.03 Rev: 1

HANDLING, PACKAGING AND SHIPPING OF SAMPLES

UNCONTROLLED

Prepared by	PATRICIA M. TILLERY (Print Name)	Patricia M Tillery (Signature)	3/21/94 (Date)
Quality Review by	DONNA L WILLIAMS (Print Name)	Donna L Williams (Signature)	3/22/94 (Date)
Technical Review by	Martin L. Wheeler (Print Name)	M L Wheeler (Signature)	3/22/94 (Date)
PM Approval	DAVID McINROY (Print Name)	D McInroy (Signature)	4/20/94 (Date)
QPPL Approval	LAWRENCE A. SOUZA (Print Name)	L A Souza (Signature)	4/19/94 (Date)

Effective Date: 5/5/94

Handling, Packaging and Shipping of Samples

Table of Contents

1.0 PURPOSE 2

2.0 SCOPE 2

2.1 Applicability 2
2.2 Training 2

3.0 DEFINITIONS 2

4.0 BACKGROUND AND/OR CAUTIONS 3

5.0 EQUIPMENT 3

6.0 PROCEDURE 3

6.1 Non-Hazardous or Environmental Samples 4
6.2 Hazardous Samples 5
6.2.1 Non-Radioactive Samples 5
6.2.2 Radioactive Samples 6

7.0 REFERENCES 7

8.0 RECORDS 8

9.0 ATTACHMENTS 8

UNCONTROLLED

Handling, Packaging, and Shipping of Samples

1.0 PURPOSE

This procedure describes handling, packaging, and shipping of samples collected for the Environmental Restoration (ER) Program. After preparation, the samples are transported to the radiation control (rad) van, chemical analysis (chem) van, or the Sample Coordination Facility (SCF) at TA-59 or TA-35 over public-access roads.

2.0 SCOPE

2.1 Applicability

This procedure is applicable to all ER, rad van, and chem van activities that involve the handling, packaging, or shipping of samples.

2.2 Training

Rad van and chem van personnel, the field team leader (FTL), and field team members must be familiar with the objectives of sample handling, packaging, and shipping and must document that they have read and understood this procedure as well as the other procedures in LANL-ER-SOPs, Section 1.0, General Instructions.

The packaging and transportation of Department of Transportation (DOT)-hazardous materials (including samples and supplies such as acids or gasoline) requires a field team member as well as rad van and chem van operators that are trained according to the Los Alamos National Laboratory (LANL) designation, Driver III. Contact BUS-6 for specific information on training requirements.

Packaging hazardous or radioactive samples requires more extensive training. Contact the training office of BUS-6 for further information if it is necessary.

UNCONTROLLED

3.0 DEFINITIONS

A. Environmental samples: Air, soil, water, or other media samples that are collected from streams, wells, and soils or other locations and are not expected to exhibit properties classified by DOT as hazardous.

B. Hazardous samples: Samples of on-site air particulates, soil, or water and materials collected at waste sites that are known or thought to meet the definition of a hazard class as defined in 49 CFR 171.8. In this SOP, "hazardous" does <u>not</u> refer to Resource Conservation Recovery Act (RCRA) hazardous wastes unless so stated.

C. ORM-D material: Other Regulated Material such as a consumer commodity, which although otherwise subject to the regulations of Subchapter C of 49 CFR 100, presents a limited hazard during transportation due to the form, quantity, and packaging. It must be a material for which exceptions are provided in the 49 CFR 172.101 Table.

D. Radioactive material: Any material having a specific activity greater than 2 nanocuries per gram (nCi/g), is the activity per unit mass of the material and in which the radionuclide is evenly distributed. (This is a DOT definition.)

4.0 BACKGROUND AND/OR CAUTIONS

In general, samples taken for the ER Program are expected to have low concentration of potential contaminants, although higher concentrations will be present in some cases. These low-concentration samples that do not satisfy the DOT hazard class definitions are classified as environmental samples and are thus not subject to DOT regulations. Historical data, knowledge-of-process, and field-screening results will assist the team members in making decisions as to whether a sample can be designated as "environmental" or need to be treated as a DOT hazardous material.

The samples are handled according to good field practice for environmental samples and according to regulations for hazardous samples. During shipment of samples, the sample integrity must be maintained. The health and safety of people and the environment must be protected from detrimental effects of hazardous materials if the samples are hazardous materials.

This SOP directs the preparation for shipping of environmental and sanitary waste samples. For DOT hazardous samples, including radioactive samples, this SOP guides the field team members to appropriate assistance.

All sample collection must be coordinated with the SCF coordinator for numbers and types of samples, analyses required, schedule for collection, numbers of containers required, and all other pertinent preparation information. The SCF staff schedules chemical analyses in cooperation with participating commercial and CST-9, Health and Protection Chemistry Group, analytical laboratories.

All samples collected for analysis are transported either to the rad van, chem van, or SCF for analytical services. A sample custodian will review each sample for proper sample size, container, preservative, and labels. The custodian documents any discrepancies in these areas and notifies the FTL of the possible consequences of these discrepancies and possible corrective actions. The custody of samples is then transferred to SCF.

A final data package is to be sent to the SCF staff for review by the participating laboratory. After the data have been validated, the report containing the chemical analyses will be released to the Operable Unit Project Leader (OUPL) and transferred to the ER Program's information management computer system.

5.0 EQUIPMENT

N/A

UNCONTROLLED

6.0 PROCEDURE

A. Classify samples collected at a site as either environmental (non-hazardous) or hazardous (including radioactive) samples according to the DOT requirements. Preliminary classification must be made in the field to ensure that the samples are transported on public-access roads safely and according to regulations. Use Sections 6.1 and 6.2 of this SOP as guides to determine characterization of sample types and applicable packaging requirements for the samples. See Attachment A for a flow chart.

B. Preserve and package samples being collected for the Laboratory's ER Program according to EPA requirements. Refer to LANL-ER-SOP-01.02, Sample Containers and Preservation for guidance.

C. Seal and label samples prior to packing the samples. Ensure that the sample containers and containers used for transport exhibit no external contamination. If necessary, decontaminate the containers according to equipment decontamination procedures.

D. Pack all samples so as to minimize the possibility of breakage during shipment. For all liquid samples, place sufficient absorbent material in the transport container to absorb all contained liquids in the event of a sample container breakage. Seal or lock the package so that any tampering can be readily detected.

E. For transport of hazardous samples or materials, prepare a Hazardous Materials Transfer Form, if applicable. Material must be packaged, marked and labeled in accordance with DOT regulations. The Hazardous Materials Transfer Form can be obtained from BUS-6 Customer Service or SCF. The Hazardous Materials Transfer Form must contain <u>two</u> 24-hour emergency telephone numbers, and a copy of the form must be sent to the Emergency Management Office.

F. After all samples are collected, packaged, and preserved, transport them to the rad van, chem van, or SCF under chain-of-custody. After the samples have been verified with the chain-of-custody documentation, a field team member relinquishes custody to rad van, chem van, or SCF personnel. Rad van or chem van personnel must maintain proper control of the samples in their custody and must reseal the packages containing samples before transporting the samples to the SCF.

G. Deliver samples to the rad van, chem van, or SCF during any legal workday between the hours of 8:00 a.m. and 12:00 p.m. and 1:00 p.m. and 5:00 p.m. Special arrangements can be made with the SCF coordinator for sample delivery during off hours.

H. All comments and any deviations from this procedure must be documented on the Daily Activity Log per SOP-01.04, Sample Control and Field Documentation.

UNCONTROLLED

6.1 Non-Hazardous or Environmental Samples

In general, samples that are collected in non-laboratory-use areas (for example, from wetlands, wells, and soils) are not expected to be contaminated with levels of hazardous or radioactive materials high enough to be considered hazardous by DOT. Most sampling is being performed to eliminate the question of contamination at waste management sites, and unless historical data, knowledge of process, or screening results suggest that samples are DOT-hazardous, samples will be transported as non-hazardous. Follow the instructions in Attachment B for packaging and handling environmental samples.

Samples taken from inactive sanitary waste lagoon or septic systems are exempt from all DOT and International Air Transport Authority (IATA) requirements if the sample collector can verify that the samples no longer contain infectious material. See Attachment C for instructions on handling sanitary waste.

UNCONTROLLED

6.2 Hazardous Samples

Although the sample media in the ER Program is expected to be soil, water, or sludge, the ER Program may have cause to sample pure product waste or highly concentrated hazardous material. If the amount of the hazardous material in the sample is small, it may be shipped under the DOT limited- or small-quantity exceptions. Small quantities of hazardous material are excepted from the DOT requirements for packaging, shipping papers, labels, and placards for that hazardous material and can be shipped as environmental samples. See exception for small quantities in 49 CFR 173.4. Hazardous materials may be transported under the limited quantity exception if that material has an excepted noted in column 8A of Table 49 CFR 172.101. Actual quantities are given in the reference indicated in Column 8A. The shipment of limited quantities must follow all requirements in the referenced section. Excepted radioactive samples must be accompanied by the specified information indicated in Section 6.2.2 of this document. For assistance, contact BUS-6 (667-4127).

6.2.1 Non-Radioactive Samples

Samples known or expected to be classified as DOT-hazardous materials must be transported according to DOT requirements. After determination of the hazardous characteristics, the selection of the appropriate hazard class and packaging exceptions, if any, can be determined from the list and text presented in 49 CFR 173.2. Attachment D provides a listing of the hazard classes and references for definitions and labeling.

Except for sanitary waste, if a known hazardous sample is to be shipped, BUS-6 must be contacted (667-4127) or SCF for assistance. In addition to the more stringent shipping requirements for hazardous samples, additional training requirements must be met to prepare these samples for transportation.

Samples taken from sanitary waste in active septic tanks or sewage lagoons can be classified as Diagnostic Specimens, which exempt them from special handling during ground transportation by 49 CFR 173.196 (h)(1). However, because these samples may be shipped by air for off-site analysis, the field team members must collect them in

the proper containers with all the appropriate packaging, per IATA. See Attachment D for collection and packaging requirements for sanitary waste samples.

CAUTION: nitric acid, which is used as a sample preservative, has restrictive DOT packaging and transportation requirements, with no exceptions allowed. All regulations in 49 CFR 172.101 and 173.158 must be followed when moving any amount of undiluted nitric acid. However, water samples preserved by nitric acid (or any other additive) are no longer forbidden because of the dilution of the nitric acid according to 49 CFR 172.101(d)(1) and can be packaged and shipped following standard practice for shipping environmental samples.

Shipment of samples preserved by DOT-regulated hazardous materials are also addressed by 40 CFR 136.3, Table II, Note 3.

6.2.2 Radioactive Samples

Most of the samples taken at ER sites will be of activity levels of 2 nCi/g or less. Since DOT only regulates radioactive material with a specific activity greater than 2 nCi/g, most samples taken at ER sites may be handled as an environmental samples unless other regulated hazards are identified or presumed to exist in the sample.

Because the DOT specifies curie amounts, which are not field readings, Attachment E, the summary table for DOT requirements for radioactive material, indicates some approximate disintegrations per minute (d/m). The health physics technician can convert d/m to counts per minute (c/m) for field readings. In this way, the health physics technician will be able to determine if a sample is above 2 nCi/g, approximately 4.4×10^3 d/m.

The LANL Radiation Protection Group (ESH-1) has established action levels of radioactivity in the ER Model Site-Specific Health and Safety Plan to alert the health physics technician of increased requirements for workers protection. Action Levels I and II, noted in Attachment E, are below the DOT-regulated radioactivity. Even though the LANL action levels of radioactivity are not regulated by DOT, special safety precautions must be taken if the activity at a sample location indicates one of the action levels. Be sure to follow all requirements in the Site-Specific Health and Safety Plan.

For materials exceeding the minimum 2 nCi/g activity, the following information applies. Contact BUS-6 for assistance if the health physics technician indicates readings in the following ranges:

A. For materials with activities of greater than 2 nCi/g but less than Type A quantities, DOT identifies a limited-quantity category and specifications for excepted packaging. Radioactive materials in the limited-quantity category may

UNCONTROLLED

be transported with minimum restrictions. See Attachment E for a summary sheet of DOT categories and levels of radioactivity in this category. Limited-quantity shipments must have the following label:

> **This package conforms to the conditions and limitations specified in 49 CFR 173.421 for radioactive material, excepted package-limited quantity of material, UN2910.**

B. Type A and B quantity samples are not expected in the ER Program. However, the summary sheet indicates the continuum of shipping requirements for all radioactive material. The summary sheet also indicates d/m for some isotopes that would cause those isotopes to be shipped as Type A material.

Also, be sure to keep the SCF coordinator informed if levels of radioactivity are in the action level or limited-quantity ranges. Refer to Attachment E for activities for these ranges. The SCF coordinator will need to make special arrangements for handling the samples to keep SCF personnel from unknowingly receiving doses of radiation and to keep SCF equipment from contamination.

If 2 nCi/g activity is exceeded, and a package for transportation must be shipped limited quantity, follow the packaging requirements listed in the summary sheet. Contact BUS-6 or SCF for assistance.

7.0 REFERENCES

The following are directly related to this procedure and should be reviewed before field operations:

LANL-ER-SOPs in Section 1.0, General Instructions.

LANL Environmental Safety and Health Administrative Requirements, AR 10-3, Hazardous and Mixed Waste.

40 CFR, 1993. Code of Federal Regulations, Title 49, U.S. Environmental Protection Agency, Parts 100 -149. July 1, 1993, U.S. Government Printing Office, Washington, D.C.

49 CFR. 1994. Code of Federal Regulations, Title 49, U.S. Department of Transportation, Parts 100-199. October 1, 1992. U.S. Government Printing Office, Washington, D.C.

Charlton, Thomas J., P.E., Chief, Standards Division, Office of Hazardous Materials Regulation, Materials Transportation Bureau, DOT, Letter to Myron D. Lair, P.E., Chief, Hazardous Waste Section, ESB, ESD, Region IV, EPA, March 22, 1985.

Dangerous Goods Regulations, International Air Transport Authority. 35th Edition, Effective January 1, 1994.

UNCONTROLLED

EPA Region IV, 1991. Standard Operating Procedures and Quality Assurance Manual. Environmental Services Division, Athens, GA.

Los Alamos National Laboratory, 1993. Installation Work Plan for Environmental Restoration. LA-UR-93-3987.

Weitzman, David, "Final Regulation Package for Compliance with DOT Regulations in the Shipment of Environmental Laboratory Samples," Memo from Work Group Chairman, Office of Occupational Health and Safety (PM-273), EPA, April 13, 1981.

8.0 RECORDS

A. Completed Chain-of-Custody/Request for Analysis Form

B. Completed Daily Activity Log

C. Copy of the Hazardous Material Transportation Form, if applicable

It is the responsibility of the OUPL to ensure that records are transmitted to the Records Processing Facility, MS M707.

9.0 ATTACHMENTS

A. Flow Chart for Sample Classification for Shipping

B. Preparation of Environmental Samples for shipment

C. DOT Hazardous Material Classification

D. Preparation of Sanitary Waste Samples for Shipment

E. Range of Material Radioactivities and Corresponding Transportation Requirements

UNCONTROLLED

FLOW CHART FOR SAMPLE CLASSIFICATION FOR SHIPPING

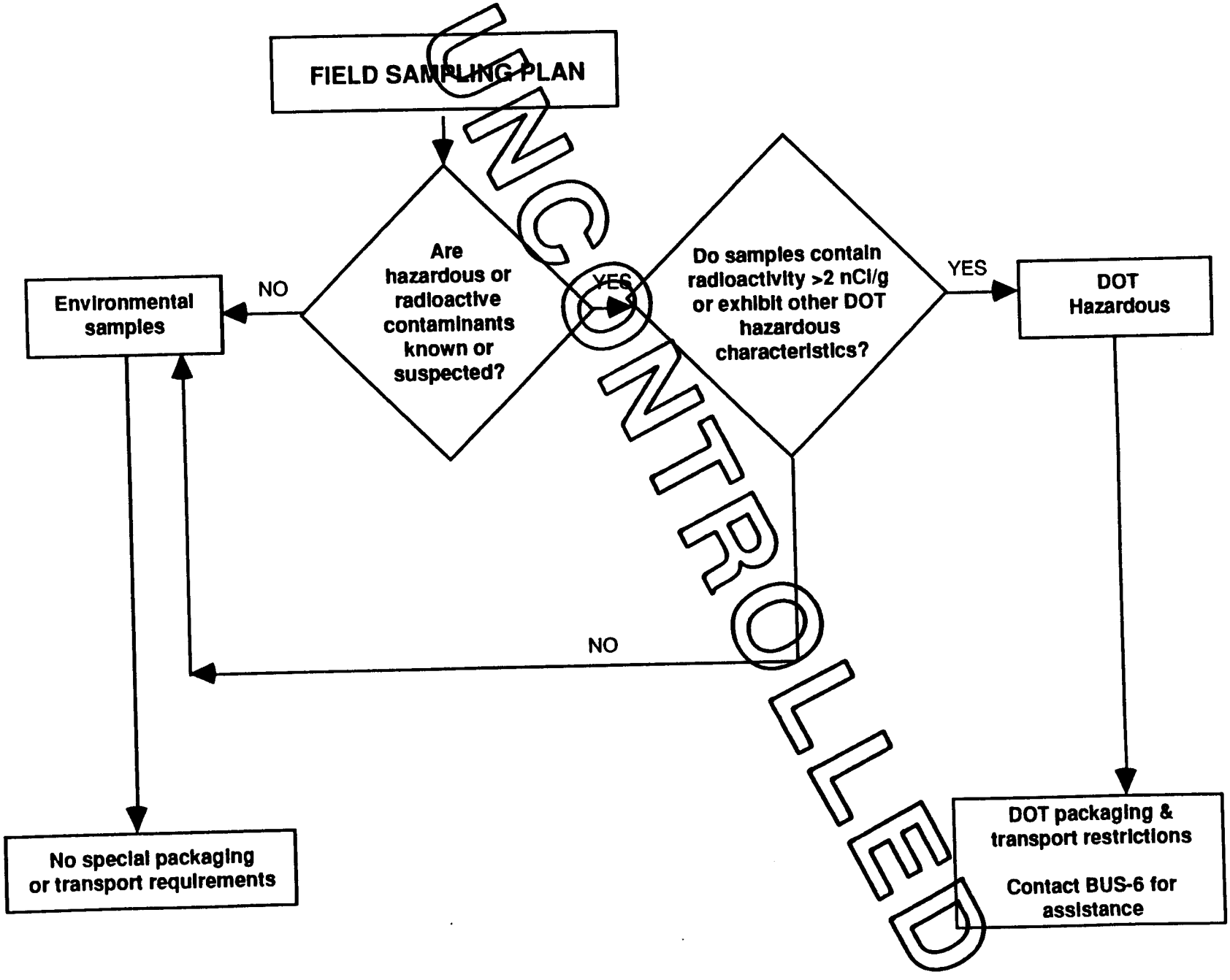

UNCONTROLLED

PREPARATION OF ENVIRONMENTAL SAMPLES FOR SHIPMENT

Environmental samples must be prepared for delivery in the following manner:

A. Packaging

1. Before any samples are placed in their delivery containers, the exterior of the sample containers should be decontaminated, if appropriate, and wiped dry.

2. For purposes of controlling leakage, sample containers should be placed, properly labeled and securely sealed, into a polyethylene sealable (e.g., Ziplock®) bag and the bag sealed.

3. If there are multiple sample containers, care should be taken to prevent breakage. Styrofoam "peanuts" or other cushioning material should be used as appropriate to prevent multiple samples from being broken during movement.

4. If the FTL deems it necessary for liquid samples, sufficient absorbent material should be placed in the cooler (or other transport container) to absorb all liquid in the event of a sample container breakage.

5. For samples requiring preservation at 4°C ± 2°C, the samples with ice or Blue Ice™ should be placed in a sturdy ice chest. The presence of ice or frozen Blue Ice™ in an amount approximately equal to the volume of samples is sufficient indication that the samples are adequately cooled.

6. When wet ice is used, it must be placed in sealed containers, such as doubled Ziplock® bags, so water does not fill the cooler as the ice melts.

HINT: If wet ice is to be used, try to purchase and use the "old" ice (bags at the bottom of the store's freezer) because newly delivered ice is not as efficient as ice that has been in the store's freezer for several days.

7. If samples are to be immediately chilled to below 4°C before delivery, they must be totally immersed in a separate cooler containing an ice slush solution that is below 4°C. To ensure this tempature before placing samples in the delivery container, a sample container of the same size filled with distilled water can be checked with a thermometer to determine when the samples have reached the desired temperature. The temperature check must be recorded.

8. Water samples must not be frozen or shipped with dry ice.

UNCONTROLLED

9. When using Blue Ice™, samples for volatile organic analysis (VOA) must be wrapped with bubble pads because direct contact between the samples and Blue Ice™ can freeze and burst the 40-ml VOA vial.

10. Completed original Chain-of-Custody/Request for Analysis forms (LANL-ER-SOP-01.04) must be placed in watertight containers and placed inside the shipping container lid.

11. The cooler or other transport container must be completely closed and secured with tape.

B. Marking/Labeling

DOT placards, marking, or labeling are not required for non-DOT regulated environmental samples that are taken to the rad van, chem van, or SCF. However, per 40 CFR 261.4 (d), all samples must be accompanied by

- The sample collector's name, mailing address, telephone number
- The laboratory's name, mailing address, telephone number
- The quantity of the sample
- The date of shipment
- Description of the sample

Some of the required information is contained on the chain-of-custody form. The first two bulleted items are not on the chain-of-custody form, so a piece of paper containing that information might be preprinted to attach to the chain-of-custody form or otherwise placed with the cooler.

Transport containers (ice chests) will be marked Environmental Samples.

* For samples from septic tanks and lagoons that contain sanitary waste, see Attachment D for packaging and shipping requirements.

UNCONTROLLED

PREPARATION OF SANITARY WASTE SAMPLES FOR SHIPPING

These instructions are for the handling and shipping of samples from septic tanks and lagoons that contain sanitary waste.

A. Samples from Inactive Septic Systems and Lagoons

A number of septic systems at the Laboratory have been inactive and have not received sanitary waste in a number of years. If the ER Program is taking samples from these septic systems, the field team manager and the OUPL can conclude that the sample media is not infectious using the following prudent and resource-conservative philosophy:

- The types of human pathogens found in sanitary waste cannot maintain a viable state because conditions of pH, temperature, oxygen and other gases, etc. are not favorable.
- Without the addition of new waste and new pathogens, the samples are not infectious.

If the OUPL and the field team manager decide that samples from inactive sanitary waste systems are not infectious, the decision, with the supporting reasons, should be documented in the Daily Activity Log. These samples can be collected and prepared for transport as soil or water samples and designated as environmental samples.

B. Samples from Active Septic Systems and Lagoons

Samples that come from active sanitary systems and are expected to contain human wastes can be designated as diagnostic samples and are excluded from the specific packaging and shipping requirements per 49 CFR 173.196 (h)(1). However, because some ER Program samples must be shipped by air to meet EPA holding-time requirements, collection and preparation of these samples must satisfy IATA requirements.

According to IATA provisions, these shipments can be identified as Diagnostic Specimens "that have a low probability of containing infectious substances." The field team manager or OUPL may determine the following prudent and resource-conservative philosophy:

- Even though there may be infectious substances in the sample, the count would be low, and the probability of sudden illness or death occurring from contact with the infectious substance is low.
- If this determination is made, the responsible party may designate the diagnostic specimen as having a low probability of containing infectious substances.
- This designation reduces the testing requirements for the containers and increases the allowed amounts in a shipping package.

UNCONTROLLED

If the OUPL and the field team manager decide that samples from active sanitary waste systems are diagnostic specimens with low probability for causing illness or death, the decision with the supporting reasons should be documented in the Daily Activity Log.

For ground transportation of these samples, these samples can be packaged and transported as though they were environmental samples. The SCF will be responsible for packaging and shipping the samples, whether by ground or air, to an off-site laboratory. However, if these samples will be shipped by air, certain restrictions will apply.

1. Containers

   For material designated as diagnostic specimens, the total volume per shipping container cannot exceed 500 ml, and the maximum volume per inner container must not exceed 100 ml. Therefore, when SCF indicates that the samples will be shipped by air, they must be collected in containers that are typically smaller than those used for analyses. The sampling team must coordinate with the SCF to address this issue before taking samples because SCF is responsible for packaging the shipment per IATA 650. The SCF will provide sample containers that meet IATA 650.

2. Warning Labels

   Although DOT does not require placarding or labeling, safety of laboratory personnel requires that the samples should be identified as sanitary waste. A label will alert all personnel handling the samples as to the sample's potential hazard. A typical warning label attached to the outside of the transport container might read

   This package contains samples of sanitary waste. If leakage is noted, take all prudent precautions and notify the sampling team that collected the samples.

UNCONTROLLED

DOT HAZARDOUS MATERIAL CLASSIFICATION
(49 CFR 173.2)

Class No.	Name of Class or Division	49 CFR Definition Reference	49 CFR Label Reference
1	Explosives	173.50	172.411
2	Gases	173.115	172.415, 416 and 417
3	Flammable and combustible liquid	173.120	172.419
4.1	Flammable solid	173.124	172.420
4.2	Spontaneously conbustible material	173.124	172.422
4.3	Dangerous when wet material	173.124	172.423
5.1	Oxidizer	173.127	172.426
5.2	Organic peroxide	173.128	172.427
6	Poisonous and infectious materials	173.132 and 134	172.430, 431 and 432
7	Radioactive Material	173.403	172.436, 438 and 440
8	Corrosives	173.136	172.442
9	Other Regulated Material	173.140	172.446

UNCONTROLLED

RANGE OF MATERIAL RADIOACTIVITIES AND CORRESPONDING TRANSPORTATION REQUIREMENTS

DOT Definition "Radioactive Material"

Not Regulated in Transport	Limited Quantities	Type A Quantity*	Type B Quantity*
LANL ESH-1 Action Level I** Above background but, < 500 cpm/probe α < 5000 cpm/probe β/γ	See 49 CFR 173.421 Contact BUS-6	See 49 CFR 173.431	
	Packaging: Strong, tight, leakproof External rad ≤ 0.5 mrem Outside package marked "Radioactive" If no inner packaging, otherwise inner packaging "Marked"		
LANL ESH-1 Action Level II** ≥ 500 cpm/probe α ≥ 5000 cpm/probe β/γ ≥ 5 mR/hr	Excepted from: Shipping papers & Certification Specification packaging Labeling Marking		
	2 nCi/g (0.002 μCi/g) 4.4×10^3 d/m	^{60}Co, 1×10^{10} d/m ^{226}Ra, 1×10^{8} d/m ^{227}Ra, 6×10^{8} d/m ^{230}Th, 4×10^{8} d/m ^{235}U, 4×10^{8} d/m ^{238}Pu, 6×10^{6} d/m ^{239}Pu, 4×10^{6} d/m ^{241}Am, 1×10^{7} d/m For others, see 49 CFR 173 Subpart I		

*Not expected in the ER program

**Follow requirements cited in the Site-Specific H&S

UNCONTROLLED

LANL-ER-AP-02.1, Procedure for LANL ER Records Management

8.0 RECORDS

Field Log Books

Daily Activity Logs (if used)

Sample Collection Logs

Chain of Custody/Request for Analysis Forms

These records shall be transferred to the ER Records Processing Facility by the FTL or designee in accordance with the Administrative Procedure for Laboratory ER Records Management, LANL-ER-AP-02.1.

9.0 ATTACHMENTS

Attachment A - Sample Labels
Attachment B - Sample Collection Log
Attachment C - Chain of Custody/Request for Analysis Form
Attachment D - Custody Seal
Attachment E - Daily Activity Log

UNCONTROLLED

Los Alamos National Laboratory Environmental Restoration Project
SAMPLE LABELS - ACCESS SYSTEM

Los Alamos National Lab
OU Internal No
TA Loc ID
Analyses | Date / Time
Preservative
FUTA-95-#### ##
Collected by Initials

Los Alamos National Lab
OU Internal No
TA Loc ID
Analyses | Date / Time
Preservative
FUTA-95-#### ##
Collected by Initials

Los Alamos National Lab
OU Internal No
TA Loc ID
Analyses | Date / Time
Preservative
FUTA-95-#### ##
Collected by Initials

Los Alamos National Lab
OU Internal No
TA Loc ID
Analyses | Date / Time
Preservative
FUTA-95-#### ##
Collected by Initials

Los Alamos National Lab
OU Internal No
TA Loc ID
Analyses | Date / Time
Preservative
FUTA-95-#### ##
Collected by Initials

Los Alamos National Lab
OU Internal No
TA Loc ID
Analyses | Date / Time
Preservative
FUTA-95-#### ##
Collected by Initials

Los Alamos National Lab
OU Internal No
TA Loc ID
Analyses | Date / Time
Preservative
FUTA-95-#### ##
Collected by Initials

Los Alamos National Lab
OU Internal No
TA Loc ID
Analyses | Date / Time
Preservative
FUTA-95-#### ##
Collected by Initials

Los Alamos National Lab
OU Internal No
TA Loc ID
Analyses | Date / Time
Preservative
FUTA-95-#### ##
Collected by Initials

Los Alamos National Lab
OU Internal No
TA Loc ID
Analyses | Date / Time
Preservative
FUTA-95-#### ##
Collected by Initials

UNCONTROLLED

Los Alamos National Laboratory Environmental Restoration Project
SAMPLE LABELS - 4D SYSTEM

LOS ALAMOS NATIONAL LAB	
Location: Center of pad	OU 9999 TA 99
LocationID: 99-00001	Date Time 10/04/95
0099-95-0001 01	
Analysis: GSCAN	
Preserv None	
Collected by: Zaphnic Zubar Initials:	

LOS ALAMOS NATIONAL LAB	
Location: Center of pad	OU 9999 TA 99
LocationID: 99-00001	Date Time 10/04/95
0099-95-0001 02	
Analysis: HEXP	
Preserv Ice	
Collected by: Zaphnic Zubar Initials:	

LOS ALAMOS NATIONAL LAB	
Location: Center of pad	OU 9999 TA 99
LocationID: 99-00001	Date Time 10/04/95
0099-95-0001 03	
Analysis: METTAL	
Preserv Ice	
Collected by: Zaphnic Zubar Initials:	

EXAMPLE INFORMATION ONLY

UNCONTROLLED

Los Alamos National Laboratory Environmental Restoration Project
SAMPLE COLLECTION LOG - ACCESS SYSTEM

Los Alamos National Laboratory Environmental Restoration
SAMPLE COLLECTION LOG

Date _____ Time (24 hr clock) _____ Sheet ____ of ____

Technical Area _____ Operable Unit _____

Site Work Plan _____

Control No. CV: RV SMO _____

Internal No. _____

Sample Loc. _____ ER-SOP _____

Loc ID _____ Sample Type _____

PRS _____

Planned Interval _____ Actual Interval _____

Composite Yes ____ No ____ Composite Type _____

Weather _____

Printed Name, Signature and Title of Preparer

ID	Container	Amt. Collected	Preserva-tive	Analyses Requested

Sample IDs and Container IDs

FUTA-YR-#### ##

FUTA-YR-#### ##

FUTA-YR-#### ##

FUTA-YR-#### ##

FUTA-YR-#### ##

FUTA-YR-#### ##

UNCONTROLLED

COMMENTS _____

Field Screening Results: _____

Los Alamos National Laboratory **Environmental Restoration Project** Standard Operating Procedure	No: LANL-ER-SOP-01.04 Rev: 3

SAMPLE CONTROL AND FIELD DOCUMENTATION

UNCONTROLLED

	(Print Name)	(Signature)	(Date)
Prepared by	NANCY NESS	Nancy Ness	10/23/95
Quality Review by	Patricia T. Gadlin	[illegible]	10/20/95
Technical Review by	Felicia M. Aguilar	Felicia M. Aguilar	10/20/95
QPPL Approval	Lawrence A. Souza	[illegible]	11/3/95
PM Approval	JORG JANSEN	[illegible]	11-14-95

Effective Date: 11/15/95

SAMPLE CONTROL AND FIELD DOCUMENTATION

Contents

1.0 PURPOSE 2

2.0 SCOPE 2
- 2.1 Applicability 2
- 2.2 Training 2

3.0 DEFINITIONS 2

4.0 BACKGROUND AND CAUTIONS 3

5.0 EQUIPMENT 3

6.0 PROCEDURES 3
- 6.1 Sample Identification 4
  - 6.1.1 Sample Labels 4
  - 6.1.2 Sample Collection Logs 5
  - 6.1.3 Chain of Custody/Request for Analysis Forms 7
  - 6.1.4 Custody Seals 10
  - 6.1.5 Electronic Follower 10
- 6.2 Field Investigation Summaries 10
  - 6.2.1 Daily Activity Entries 10

7.0 REFERENCES 11

8.0 RECORDS 12

9.0 ATTACHMENTS 12

UNCONTROLLED

SAMPLE CONTROL AND FIELD DOCUMENTATION

1.0 PURPOSE

This procedure describes the steps necessary to document the traceability of samples collected for the Environmental Restoration (ER) Project.

2.0 SCOPE

2.1 Applicability

This procedure is applicable to all ER Project activities involving samples collected for analysis for regulatory compliance.

2.2 Training

The Field Project Leader (FPL), Field Team Leader (FTL), Sample Management Office (SMO) staff, and site workers responsible for collecting samples and preparing documentation must be familiar with the objectives of sample control and documentation. They must document that they have read and understood this procedure.

Classroom or on-the-job or both types of training is required for the Field Systems (ACCESS and 4D) that must be used for generating field paperwork and electronic files for the SMO.

UNCONTROLLED

3.0 DEFINITIONS

Chain of Custody: The procedural steps to assure traceability of a sample from initial collection to final disposition.

A sample is in one's custody when one or more of the criteria listed below have been satisfied:

- the sample is in one or more of the field team members' physical possession, or
- the sample is in one's view after being in one's physical possession, or
- the sample is in a locked or secured area (accessible only to authorized personnel) and maintained in a manner that would make any tampering evident.

Documentation of these criteria provides evidence that the chain of custody has been maintained.

The Chain of Custody/Request for Analysis form documents the traceability of the sample and the location from which the sample was collected.

Electronic Follower: A floppy disk containing in electronic format the information that is found on the Chain of Custody/Request for Analysis form. The electronic follower is used to track sample data.

Field Team Members: Those authorized individuals present at a sampling site during sample collection. Their presence at the site must be documented, which can be done with Daily Activity Logs, Field Log Books, or Tailgate Safety Meeting Forms.

Field Systems: The ACCESS or 4D softwares used to generate field paperwork and electronic files.

4.0 BACKGROUND AND CAUTIONS

All work performed for the ER Project must be thoroughly and accurately documented. Sample control and documentation are necessary to document the work performed in the field, to ensure traceability and defensibility of resulting data, and to be legally defensible. Lack of complete documentation may render the field work invalid.

5.0 EQUIPMENT

Computer
Compatible Printer

6.0 PROCEDURES

A. Contact the SMO at least 2 weeks, preferably 30 days, before field work is to begin. This will allow the SMO to ensure adequate laboratory space is available for specific analyses and turnaround needs. The SMO will also be able to provide recommendations from associated laboratories regarding minimum amounts of matrix needed by each laboratory so that the field teams will be able to better plan volumes and containers to minimize excess sample material and unnecessary analytical costs.

B. All forms will be computer-generated using 4D or ACCESS Field Systems as shown in Attachments A through C. Corrections, if any, must be made with dark-colored indelible ink. To ensure integrity of documentation, it is preferable that handwritten corrections not be made to the Chain of Custody/Request for Analysis forms. However, if such corrections are made, the electronic follower must be corrected before delivery to the SMO. The electronic follower **must** match the Chain of Custody/Request for Analysis form before delivery to the SMO.

C. Obtain from Facility for Information Management, Analysis, and Display (FIMAD) the ER location identification (ID) number for the area where sample collection is planned. The location ID number is prefixed with the Technical Area (TA) number. This unique identifier allows location information to be entered into the FIMAD system and also connects the exact location with the analytical results.

UNCONTROLLED

D. Follow the standard operating procedures (SOPs) for media-specific sample collection. These SOPs may require following special instructions or completing additional forms.

E. Documents must not be destroyed or discarded even if they are illegible or contain inaccuracies that require replacement documents. Any inaccuracies must be resolved upon discovery by crossing through the error with a single line, correcting it on the original document, and initialing and dating the correction. If the correction is not self-explanatory, the individual must assign a number to the correction and attach to the original a sheet that fully describes the correction.

6.1 Sample Identification

Field System computer-generated forms and labels must be prepared so that identification and chain-of-custody records can be maintained and sample disposition can be controlled. The labels and forms associated with this procedure are listed below. Examples are provided as Attachments A through C.

Field Units may use either Field System to generate the forms and labels described below. Slight variations in the placement of information are acceptable on computer-generated forms. However, all computer-generated forms must contain the required information identified in this SOP.

6.1.1 Sample Labels

Sample labels (Attachment A) provide information regarding the samples.

1. Each label will include the following information:

- OU: Four-digit number indicating the Operable Unit (OU) in which sampling activities are being executed.
- TA: Two-digit number indicating the TA in which the sampling activities are being executed.
- Unique bar code indicating both sample identification and container number: Sample identification number and container number for each sample in shipment.
- Date, Time: Date and time when the sample was collected.
- Location ID: A unique number that allows location information to be entered into FIMAD.
- Analysis: Order code for type of contaminant for which sample is being analyzed (e.g., METAL, SEMI, VOC, GSCAN).

UNCONTROLLED

- Preserve: Type of preservative needed for a particular analysis (e.g., ice, HNO_3, none).
- Collected by, Initials: Printed name and initials of collector.
- Location: This is an optional field. If it is used, give a general description of sampling location (e.g., borehole HDH-1 by TA-16-03, outfall samples in Mortandad Canyon, etc.).

2. Completed sample labels must be affixed to the sample containers prior to or immediately following the sampling activity.

6.1.2 Sample Collection Logs

1. The FTL or designee is responsible for the completion of the Sample Collection Log (Attachment B) and must record all information pertinent to the collection of sample media on this log.
2. A sample collection log must be completed for each sample collected.
3. Information must be supplied for all fields provided on the Sample Collection Log. If a field is not applicable to a specific project, N/A (for "not applicable") must be printed in the field. Record additional information in the Comments section. The Comments section may be customized to the OU's data needs by the addition of optional fields. Some fields may be filled in by hand rather than computer-generated.
4. Entries on these logs include the following:
    - Date, Time: Date and time when the sample was collected.
    - Technical Area: Two-digit number indicating the TA in which the sampling activities are being executed.
    - Operable Unit: Four-digit number indicating the OU in which sampling activities are being executed.
    - Name/Signature: Printed name and signature of preparer.
    - Sample ID: A unique identification string of 12 characters including dashes assigned to each sample.
    - Control No.: A unique identification string of 12 characters (including dashes) assigned for each Chain of Custody/Request for Analysis form for this sample.

UNCONTROLLED

- Sample Location: General description of sampling location (e.g., borehole HDH-1 by TA-16-03, outfall samples in Mortandad Canyon, etc.).

- Location ID: This unique identifier allows location information to be entered into FIMAD and also connects the exact location with the analytical results. For composite samples from multiple locations, the number of samples and the location ID for each location are entered.

- Sample Type: Description of type, such as soil, ground water, surface water, filter air, charcoal tubes, ambient air, personnel air, sludge, drum contents, oil, vegetation, fauna, wipe, sediment, etc.

- Container: Volume and type of container used (e.g., 1-liter glass container).

- Analysis: Order code for type of contaminant for which sample is being analyzed (e.g., METAL, SEMI, VOC, GSCAN).

- Preservative: Type of preservation needed for a particular analysis (e.g., ice, HNO_3, none).

- Composite, Composite Type, Grab Number: If composite samples are taken, identify the type of composite sample (e.g., 24-hour composite, spatial composite); also identify the number of locations sampled to make up the composite sample.

- Depth: Description of sample intervals in inches or feet, including unit (e.g., depth of sample in feet, distance on transect in feet).

- Weather: Approximate temperature, sun, and moisture conditions.

- Field Screening: The results of field screening conducted on a given sample (for example, photoionization detector or flame ionization detector readings in ppm, field high-explosive testing—negative or positive).

- Photo: Photo information such as roll number, frame number, subject, and participants.

- Any additional field observations/comments, pertaining to the sample.

- ER-SOP: The unique identifier of the LANL-ER-SOP utilized to collect the sample.

UNCONTROLLED

6.1.3 Chain of Custody/Request for Analysis Forms

1. Chain of Custody/Request for Analysis forms (Attachment C) are used to document the integrity of all samples and to maintain a record of sample collection, transfer between personnel, shipment, and receipt by the laboratory. A unique control number must appear on each set of three-part forms that represent one Chain of Custody/Request for Analysis Form.

2. Generate a control number for each sample. If required, more than one sample number may appear on a single Chain of Custody/Request for Analysis form. For sampling conducted according to RFI Work Plans the control number has the structure "YYYY-NN-XXXX," where

   - YYYY is the Field Unit and TA. (For expedited cleanups or voluntary corrective actions other unique identifiers may be used in the YYYY field.),
   - NN is the calendar year,
   - XXXX is a unique sequential number.

3. <u>For samples delivered to the SMO</u>:

   All copies of the Chain of Custody/Request for Analysis form must accompany the sample(s) on delivery to the SMO. The FTL or designee signs the Chain of Custody/Request for Analysis form in the "Relinquished By" block, and an individual at the SMO signs the form in the "Received By" block along with the date and time. All copies of the form must be signed, unless carbons or no carbon required (NCR) paper are used. After an individual at the SMO has acknowledged receipt of samples by signing the form, the FTL or designee keeps the third or pink copy. The original (top or white) copy is kept with the samples, and the second (yellow) copy will be sent to the Records Processing Facility by the SMO.

4. <u>For samples delivered to a mobile analytical laboratory</u>:

   All copies of the Chain of Custody/Request for Analysis form must accompany the sample(s) on delivery to the mobile analytical laboratory. The FTL or designee signs the Chain of Custody/Request for Analysis form in the "Relinquished By" block, and an individual at the mobile analytical laboratory signs the form in the "Received By" block along with the date and time. All copies of the form must be signed, unless carbons or NCR paper are used. After an individual at the mobile analytical laboratory has acknowledged receipt of samples by signing the form, the FTL or designee keeps the third or pink copy. The original (top or white) copy and the second (yellow) copy are kept with the samples until the

UNCONTROLLED

analyses have been run. The original and second copies are returned to the FTL or designee when the results and sample waste are picked up. The original copy is forwarded to the Records Processing Facility by the FTL or designee.

NOTE: The Chain of Custody/Request for Analysis form signed off by the mobile analytical laboratory(s) is not a completed record. The FTL or designee should retain the pink copy for his/her use only!

5. Information must be supplied in all blank spaces on the Chain of Custody/Request for Analysis form. If the space is not applicable, enter N/A.

6. The Chain of Custody/Request for Analysis form contains the following information:

   - Date: The date field is set to be the date the Chain of Custody is generated. Be sure to change date in the field if shipping occurs on a subsequent date. 40 CFR 261.4 requires that the date of shipping must accompany the sample.

   - Los Alamos National Laboratory (Laboratory) Destination: The analytical laboratory(s) within the Laboratory that the samples are being sent to.

   - Laboratory Contact: The SMO laboratory contact.

   - Charge Code: The Laboratory program/cost code associated with this sampling activity.

   - Control Number: A unique number on each three-part set of forms.

   - Technical Area: Two-digit number indicating the TA in which the sampling activities are being executed.

   - Send Lab Report To: The name and mailstop of the OU contact to whom the analytical laboratory results should be sent.

   - Operable Unit: Four-digit number indicating the OU in which sampling activities are being executed.

   - OU Contact: FPL or designee, as appropriate.

   - Contact Phone No: The telephone number of the OU contact person.

UNCONTROLLED

- Turnaround Time: SMO laboratory turnaround time default is 45 days; prior arrangements must be made with SMO for shorter times.

- Date Lab Report Required: Approximate date when the lab results are needed. Normal delivery time is 60 days.

- Sample ID, and Container ID: Sample identification number and container number for each sample in shipment.

- Date/Time Collected: For each sample in shipment.

- Sample Container: Type and volume of sample container used (e.g., 1-L glass).

- Matrix: Sample description (e.g., liquid, soil, core, sludge).

- Preservative: Type of preservative used (or None).

- Analysis Requested: Analysis requested for each sample, from the standard ordering codes in the ACCESS or 4D system.

- Screening Method: Type of screening method used.

- Remarks: Additional relevant information pertaining to the samples (e.g., condition on receipt).

- Relinquished by: Name and signature of field team member transferring possession of samples to the mobile analytical laboratory(s) or SMO, or to any other authorized person.

- Received by: Name, signature, and affiliation of individual receiving the samples.

  NOTE: The individual accepting custody of a sample or set of samples must verify that all containers identified on the Chain of Custody/Request for Analysis form are contained in the packages(s) being accepted. The signature on the form acknowledges that all the sample containers have been received.

- Possible Hazard Identification: If sample(s) is hazardous material and/or suspected to contain high levels of hazardous substances, check the appropriate space(s): Radiological, Highly Toxic, Flammable, Skin Irritant, Non-Hazard, or Other. If "Other" is selected, indicate in writing what the other hazard is.

- Comments: Any additional comments are included here.

UNCONTROLLED

7. The FTL or designee is responsible for ensuring delivery of the samples to the SMO and/or the mobile analytical laboratory(s) and for the completion of the Chain of Custody/Request for Analysis form. The FTL or designee will inspect the form for completeness and accuracy.

6.1.4 Custody Seals

1. Custody seals (Attachment D) must be used to ensure that samples are not tampered with during shipment.

2. The custody seal for every sample are initialed and dated by a member of the sampling team.

3. The lid of every sample container are sealed with a custody seal. The seal will be in contact with the bottle and the lid.

4. The sealed sample containers are delivered to the SMO and/or the mobile analytical laboratory(s).

6.1.5 Electronic Follower

1. The electronic follower is used to track sample data. The Chain of Custody/Request for Analysis form and the electronic follower contents **must** agree before delivery of the sample(s) to the SMO.

2. Samples delivered to a mobile analytical laboratory(s) do not require an electronic follower.

3. Samples delivered to the SMO will not be accepted without an electronic follower.

UNCONTROLLED

6.2 Field Investigation Summaries

Field Log Books or Daily Activity Log forms must be used by field personnel to record all pertinent field data including detailed summaries of information pertaining to the field investigation, and additional field data (e.g., unusual events such as storms). If Field Log Books are used, LANL-ER-SOP-03.12, Field and Laboratory Notebook Documentation for Environmental Restoration Earth Sciences Studies, must be followed. These log books are tracked documents; unique identifying numbers are issued by the Controlled Documents Coordinator at the Records Processing Facility.

6.2.1 Daily Activity Entries

The FTL is responsible for keeping field notes that briefly summarize each day's progress. If Daily Activity Log Forms (Attachment E) are used, paginate each sheet of the Daily Activity Log for each day (e.g., 1 of 4, 2 of 4, etc.).

1. Entries in the Field Log Books or Daily Activity Log forms include the following:

   - Date: Month, day, and year at the start of each day and at the top of each page.
   - Time: The time of each activity.
   - Technical Area: Two-digit number indicating the TA in which the sampling activities are being executed.
   - Operable Unit: Four-digit number indicating the OU in which the sampling activities are being executed.
   - Site Work Plan: If applicable, include the Site Work Plan number.
   - Signature: Preparer must sign the entries at the end of each day.
   - Comments: Comments may include, but are not limited to, the following:

     - a general description of daily activities
     - deviations from approved plans or procedures
     - field team members' names
     - a description of general field conditions encountered
     - special problems
     - sketches and calculations pertaining to the job
     - performance of subcontractors, such as their equipment's suitability and adequacy
     - names and affiliations of all ER Project personnel onsite
     - supplies and equipment used
     - when photographs are taken in the field, the time, date, location, roll identification number, frame number, general compass direction, a description of the subject matter, and the photographer's name must be recorded
     - decontamination practices, such as the time at which decontamination is performed
     - a description of waste generated as a result of the field investigation
     - any additional field observations pertinent to the investigation.

UNCONTROLLED

7.0 REFERENCES

LANL-ER-SOP-03.12, Field and Laboratory Notebook Documentation for Environmental Restoration Earth Sciences Studies

Los Alamos National Laboratory Environmental Restoration Project
SAMPLE COLLECTION LOG - 4D SYSTEM

Los Alamos National Laboratory Environmental Restoration Program

SAMPLE COLLECTION LOG FOR SAMPLE ID 0099-95-0001

Date October 4, 1995 Time

Sample Type Soil - Surface

Technical Area 99 Operable Unit 9999

Sample Location Center of pad

QA/QC Type None

Composite: ○ Yes ◉ No

Name (Print) Zaphnic Zubar

Composite Type: None

Signature _____

Grabs:

	Location ID	Start Depth	End Depth	Units
1	99-00001	0	6	in

These Samples were collected using LANL ER SOP 06.09

ID	Analysis	Container	Preservative	C of C Control No.
01	GSCAN	125 ml Polyethylene	None	9999-95-0001
02	HEXP	125 ml Glass	Ice	9999-95-0001
03	METTAL	125 ml Polyethylene	Ice	9999-95-0001

Weather _____

Sample Description _____

Field Screening

Loc ID	Depth	Screening Method	Result	Units	Comments
99-00001	0 to 6 in	CGI		%LEL	
99-00001	0 to 6 in	Field HE			
99-00001	0 to 6 in	Field Rad (alpha)		cpm	
99-00001	0 to 6 in	Field Rad (beta/gamm		cpm	
99-00001	0 to 6 in	Oxygen		%	
99-00001	0 to 6 in	PID		ppm	

Photo (Roll, Frame, Azimuth, Subject, Participants):

Comments:

UNCONTROLLED
EXAMPLE INFORMATION ONLY

Los Alamos National Laboratory Environmental Restoration Project
CHAIN OF CUSTODY/REQUEST FOR ANALYSIS FORM
- ACCESS SYSTEM

Los Alamos National Laboratory Environmental Restoration
CHAIN OF CUSTODY/REQUEST FOR ANALYSIS

Date _____ Charge Code _____ Control No. _____ Page ___ of ___
Operable Unit _____ Send Lab Report To _____ MS
Technical Area _____ Site Work Plan _____

FPL _____ Turnaround Time _____ LANL Destination _____
FPL Phone No. _____ Date Lab Report Required _____ LANL Contact _____
OU Contact _____
Contact Phone No _____

Sample ID #	Cont ID #	Date / Time Collected	Sample Container Volume/Mat'l	Sample Matrix	Preserva -tive	Requested Analyte Code	REMARKS (Condition of receipt, etc.)

Relinquished by (Signature) Affiliation	Date	Relinquished by (Signature) Affiliation	Date	Relinquished by (Signature) Affiliation	Date
Received by (Signature) Affiliation	Time	Received by (Signature) Affiliation	Time	Received by (Signature) Affiliation	Time

POSSIBLE HAZARD IDENTIFICATION
(Indicate if sample(s) are hazardous materials and/or suspected to contain)
Radiological__ Highly Toxic__ Flammable__ Skin Irritant__ Non-hazard__ Othe

SAMPLE DISPOSAL
Return to client ___ Disposal by lab ___ Archive ___ (Months)

RAD SCREENING METHOD

COMMENTS

WHITE To accompany samples YELLOW Records Processing Facility PINK Field Team Leader

UNCONTROLLED

Los Alamos National Laboratory Environmental Restoration Project
CHAIN OF CUSTODY/REQUEST FOR ANALYSIS FORM - 4D SYSTEM

COC 9999-95-0001
Page 1 of 1

Los Alamos National Laboratory Environmental Restoration (Los Alamos, NM 87545)
CHAIN OF CUSTODY/REQUEST FOR ANALYSIS

Technical Area 99	Send Lab Report to Field Project Leader	Field Unit Leader Field Project Leader
Operable Unit 9999	Z999	()999-9999
Date 10/04/95	LANL Destination	Turnaround 45 days
OU Contact Field Project Mgr.	LANL Contact SMO Lab Contact	Lab Report Required 11/18/95
Contact Phone No () 999-9999	LANL Mail Stop	Charge Code 9999999999999999

Relinquished by: Zaphnic Zubar (Signature): Affiliation: Outer Limits, Inc.	Date:	Relinquished by: (Signature): Affiliation:	Date:	Relinquished by: (Signature): Affiliation:	Date:
Received by: (Signature): Affiliation:	Time:	Received by: (Signature): Affiliation:	Time:	Received by: (Signature): Affiliation:	Time:

POSSIBLE HAZARD IDENTIFICATION: (please indicate if sample(s) are hazardous materials and/or suspected to contain high levels of hazardous substances): Radiological___ Highly Toxic___ Flammable___ Skin Irritant___ Non-Hazard___ Other___

SCREENING METHOD: Field Screening

SAMPLE DISPOSAL: Return to Client

Comments:

Field Unique Sample #/ID	Cont ID	Date & Time Collected	Sample Container Volume/Material	Matrix	Preserv	ANALYSIS REQUESTED: (SMO Order Codes)	REMARKS (Conditions of receipt, etc.)
0099-95-0001	01	10/04/95	125 ml Polyethylene	Soil	None	GSCAN	
0099-95-0001	02	10/04/95	125 ml Glass	Soil	Ice	HEXP	
0099-95-0001	03	10/04/95	125 ml Polyethylene	Soil	Ice	METTAL	

Original - LANL Destination Yellow - RPF Pink - FIL Copy

UNCONTROLLED
EXAMPLE INFORMATION ONLY

Los Alamos National Laboratory Environmental Restoration Project
CUSTODY SEAL

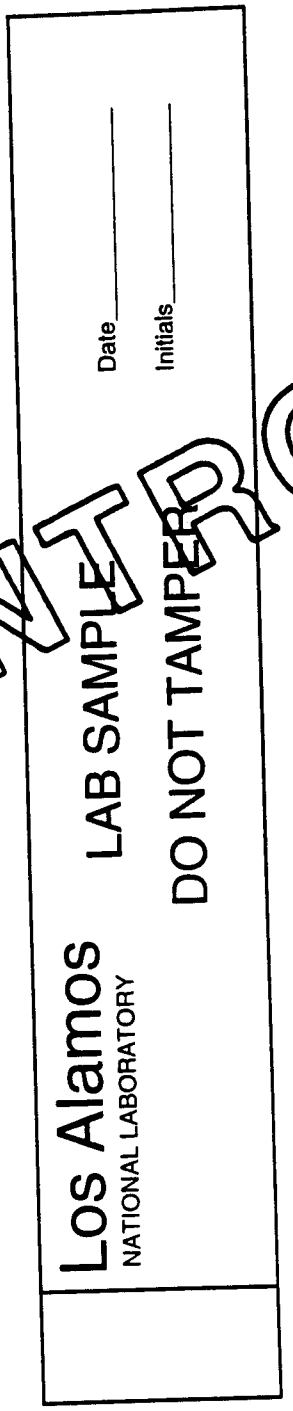

UNCONTROLLED

The custody seal shown above is a red gummed cellophane label.

Los Alamos National Laboratory Environmental Restoration Project
DAILY ACTIVITY LOG

Date: _____ Sheet ____ of ____

Technical Area _____ Operable Unit _____

Site Work Plan _____

Signature _____

Comments:

UNCONTROLLED

Los Alamos National Laboratory **Environmental Restoration Program** Standard Operating Procedure	No: LANL-ER-SOP-01.05 Rev: 0

Field Quality Control Samples

UNCONTROLLED

Preparer:	Sandra Wagner (Print Name)	Sandra Wagner (Signature)	12-24-91 (Date)
Quality Review by:	Larry Maassen (Print Name)	Larry Maassen (Signature)	1-9-92 (Date)
Technical Review by:	John J. Miglio (Print Name)	John J Miglio (Signature)	1/29/92 (Date)
QPPL Approval:	Karen L Warthen (Print Name)	Karen L Warthen (Signature)	2/27/92 (Date)
PM Approval:	Robert W Vocke (Print Name)	Robert W Vocke (Signature)	3-4-92 (Date)

Effective Date: 3-16-92

Field Quality Control Samples

Table of Contents

1.0 PURPOSE 2

2.0 SCOPE 2
- 2.1 Applicability 2
- 2.2 Training 2

3.0 DEFINITIONS 2

4.0 BACKGROUND AND/OR CAUTIONS 3

5.0 EQUIPMENT 3

6.0 PROCEDURE 3
- 6.1 Background Sample 4
- 6.2 Equipment (Rinsate) Blank 4
- 6.3 Field Blank 4
- 6.4 Field Duplicate (Replicate) 4
- 6.5 Reagent Blank 4
- 6.6 Trip Blank 5

7.0 REFERENCES 5

8.0 RECORDS 5

9.0 ATTACHMENTS 5

UNCONTROLLED

Field Quality Control Samples

1.0 PURPOSE

This procedure provides instructions for the collection of field quality control (QC) samples to ensure the reliability and validity of field and laboratory data.

2.0 SCOPE

2.1 Applicability

This procedure is applicable to all Environmental Restoration (ER) Program activities involving the collection of field QC samples.

2.2 Training

The Field Team Leader (FTL) is responsible for monitoring the proper implementation of this procedure and must ensure that field team members collecting QC samples are trained on each sampling procedure to be used. Additionally, the FTL and field team members must document that they have read and understood this procedure and the other procedures in Section 1.0, General Instructions.

UNCONTROLLED

3.0 DEFINITIONS

A. Aliquot: A sample aliquot is a portion of a sample that is representative of the entire sample.

B. Background Sample: A sample collected from an area or site similar to the one being studied, but located in an area known or thought to be free from pollutants of concern.

C. Equipment (Rinsate) Blank: Usually organic-free water that is as free of analyte as possible and is transported to the site, opened in the field, and poured over or through the sample collection device, collected in a sample container, and returned to the laboratory.

D. Field Blank: Usually organic-free water solution that is transferred from one container to another at the sampling site and preserved with the appropriate reagents.

E. Field Duplicate (Replicate) Samples: Two separate, independent samples taken from the same source that are collected in such a manner that they are co-located samples, equally representative of the sample matrix at a given location and time.

F. Quality Control Samples: Samples used in a planned check of the operation of a measurement system to obtain a measure of the quality of the data generated.

G. Reagent Blank: Usually an organic-free aqueous solution that is as free of analyte as possible and contains all the reagents in the same volume as used in the processing of the samples. A reagent blank must be carried through the complete sample preparation procedure and contains the same preservation reagent concentrations in the final solution as in the sample solution used for analysis.

H. Trip Blank: Usually an organic-free aqueous solution that is as free of analyte as possible and is transported to the sampling site and returned to the Sample Coordination Facility (SCF) without being opened. A trip blank is usually prepared by the SCF prior to the sampling event.

UNCONTROLLED

4.0 BACKGROUND AND/OR CAUTIONS

The majority of ER field efforts require the collection of samples for various quality control purposes. These include the isolation of site effects (control samples), definition of background (background sample), evaluation of field/laboratory methodology (duplicate samples), and assessment of the integrity of the sampling equipment (equipment rinsate blanks).

Sampling procedures outlined in the Sampling and Analysis Plans (SAPs) will be applied to QC samples in the same way they are applied to samples taken in the field. QC sample containers must be labeled and transported, and the samples analyzed in a manner identical to all other samples taken at a site.

5.0 EQUIPMENT

Equipment required for this procedure is only that specified by the Operable Unit (OU) Sampling and Analysis Plans.

6.0 PROCEDURE

The requirements for field QC samples will be evaluated as part of the OU-specific Sampling and Analysis Plan. QC sample requirements for radiological samples differ from those for nonradiological samples. Summaries of these requirements for radiological and nonradiological sampling are provided in Attachments A and B, respectively. The requirements are also provided in the Generic Quality Assurance Project Plan for Resource and Conservation Recovery Act (RCRA) Facility Investigation (LANL, 1991). In addition to the QC samples listed in these summaries, projects may require other types of samples be collected to obtain information concerning the sampling site (e.g., background and control samples). Determine the need for these samples during the preparation activities.

Obtain organic-free water in sealed containers appropriate for transport to the field and in sufficient quantity to prepare the required equipment (rinsate) blanks, field blanks, and reagent blanks. Organic-free water can be acquired at the Sample Coordination Facility (SCF).

Collect each type of QC sample required in the manner defined below.

See Attachment A for frequency of QC samples.

6.1 Background Sample

Based on knowledge of the site and surrounding areas, identify areas and/or bodies of water that are similar to those being studied, but that are known or thought to be free of the contaminates of concern. Collect samples in the contaminate-free locations using the same sampling procedures used for samples from the site being studied.

6.2 Equipment (Rinsate) Blank

After field cleaning the sampling equipment, rinse with organic-free water and collect the rinsate for analysis. Assure that all equipment surfaces that come in contact with the sampling materials are rinsed (e.g., the inside of a bailer).

6.3 Field Blank

In the immediate vicinity of the sample collection activity, pour a quantity of organic-free water into designated sample containers. Follow the sample preservation procedure using the same preservatives and volumes as used with the other collected samples.

6.4 Field Duplicate (Replicate)

At the frequency specified for the type of sample(s) being collected, collect two separate samples from the same source and at the same location and time. Place the samples in separate containers, follow the sample preservation procedure, mark each as a unique sample, and submit both samples for the same analyses.

6.5 Reagent Blank

Pour a quantity of organic-free water that is free of the analyte(s) of interest into designated sample containers. Add to this container all preservation reagents, in the same concentration and volume, as those added to a sample.

UNCONTROLLED

6.6 Trip Blank

Request that trip blanks be prepared by the SCF providing the sample containers for the sampling activities and that they be shipped with those containers. The number to be requested depends upon the number and type of samples to be collected. (See Attachments A and B for guidance.) Maintain the trip blanks with the sample containers throughout the sampling event and return them to the laboratory with the collected samples. Do NOT open the trip blanks.

7.0 REFERENCES

The following procedures are directly associated with this procedure and should be reviewed before field operations:

LANL-ER-SOPs in Section 1.0, General Instructions

LANL (Los Alamos National Laboratory), May 1991. "Generic Quality Assurance Project Plan for RCRA Facility Investigations for the Los Alamos National Laboratory Environmental Restoration Program," Los Alamos, New Mexico (current version).

LANL (Los Alamos National Laboratory), November 1991. "Installation Work Plan for Environmental Restoration," Los Alamos, New Mexico (current version).

Sisk, S.W., 1981, "NEIC Manual for Ground Water Subsurface Investigations at Hazardous Waste Sites," EPA Office of Enforcement, National Enforcement Investigations Center, Denver, Colorado. (Sisk, 1981, _____)

UNCONTROLLED

8.0 RECORDS

Records to be generated during sampling are listed in the applicable sampling procedures.

9.0 ATTACHMENTS

A. Quality Control Sample Summary for Radiological Samples

B. Quality Control Sample Summary for Nonradiological Samples

Quality Control Sample Summary for Radiological Samples[a]

QC Sample Type	Matrix of Samples	Frequency	Purpose
Field Duplicate	Soil Water	1 per 20 samples 1 per 20 samples (or less)	To evaluate the reproducibility of the sampling technique.
Rinsate Blank	Water used to rinse equipment	1 per 20 samples[b] decontamination	To evaluate procedures.

[a]Generic Quality Assurance Project Plan for RCRA Facility Investigations for the LANL ER Program, May 1991, Sections 5 and 10 (subject to annual update).

[b]Or 1 per shipment if less than 20 samples are collected in a day.

UNCONTROLLED

Quality Control Sample Summary for Nonradiological Samples[a]

QC Sample Type	Matrix of Samples	Frequency	Purpose
Field Blank	Soil Water	1 per 20 samples* 1 per 20 samples*	To determine reagent and field contamination from other than sampling matrix
Reagent Blank	Water	1 per 20 samples*	To determine any contamination from preparation and processing of samples.
Field Duplicate (Replicate)	Soil Water	1 per 20 samples 1 per 10 samples	To evaluate the reproducibility of the sampling technique.
Rinsate Blank	Soil Water	1 per 20 samples* 1 per 10 samples**	To evaluate decontamination procedures.
Trip Blank	Water	1 per shipping container for VOA[b] analyses only.	To determine contamination during storage and transport.

[a]Generic Quality Assurance Project Plan for RCRA Facility Investigations for the LANL ER Program, May 1991, Section 5 (subject to annual update).

[b]VOA - Volatile Organic Compounds

* or 1 per shipment if less than 20 samples are collected in a day.
** or 1 per shipment if less than 10 samples are collected in a day.

UNCONTROLLED

Los Alamos National Laboratory **Environmental Restoration Program** Standard Operating Procedure	No: LANL-ER-SOP-1.06	Rev: 0

Management of RFI-Generated Waste

UNCONTROLLED

	(Print Name)	(Signature)	(Date)
Prepared by	John W Krueger	John W Krueger	2/26/92
Quality Review by	Larry Maassen	Larry Maassen	27 Feb 92
Technical Review by	Juan Espon	[illegible]	2/27/92
Technical Review by	David McINROY	James L White for	2/27/92
PM Approval	Robert W Vocke	Robert W Vocke	3-4-92
QPPL Approval	Karen L Warthen	Karen L Warthen	3/4/92

Effective Date: 3-16-92

Management of RFI-Generated Waste

Table of Contents

1.0 PURPOSE 2

2.0 SCOPE 2
- 2.1 Applicability 2
- 2.2 Training 2

3.0 DEFINITIONS/ACRONYMS 2

4.0 BACKGROUND AND/OR CAUTIONS 4

5.0 EQUIPMENT 4

6.0 PROCEDURE 5

7.0 REFERENCES 6

8.0 RECORDS 7

9.0 ATTACHMENTS 7

UNCONTROLLED

Management of RFI-Generated Waste

1.0 PURPOSE

This standard operating procedure provides decision making guidelines related to the handling and disposition of waste generated by Environmental Restoration (ER) Program field investigation activities.

2.0 SCOPE

2.1 Applicability

This standard operating procedure is intended to cover and is applicable to Resource Conservation and Recovery Act (RCRA) Facility Investigation (RFI) waste management concerns from the point of generation in the field, to the point of acceptance for treatment, storage, and/or disposal by EM-7. It does not apply to corrective action waste. Waste management techniques for cleanup activities should be developed site-specifically and detailed in the corrective action plan or design document. Waste management procedures detailed in the Los Alamos National Laboratory (the Laboratory) Administrative Requirements (ARs) are applicable to all ER program activities.

2.2 Training

The field team leader (FTL) is responsible for ensuring proper implementation of this procedure and must ensure that he/she and all field team members document that they have read and understand this procedure, the other procedures in Section 1.0, General Instructions, and the associated administrative requirements.

UNCONTROLLED

3.0 DEFINITIONS/ACRONYMS

A. AR: Administrative Requirements for Environment, Safety, and Health (ES&H). Published in the Los Alamos National Laboratory ES&H Manual, these requirements have been mandated by Laboratory management to ensure that all employees adhere to applicable ES&H laws, regulations, and U.S. Department of Energy (DOE) orders.

B. Disposables: Sanitary Landfill Waste -- Waste that does not contain radioactive materials, hazardous chemicals, explosives, or any combination thereof.

C. Explosives waste: Waste potentially contaminated with explosives, equipment potentially contaminated with explosives, and explosive scrap. This waste must be disposed of through the Fabrication and Assembly Group (WX-3) (see AR 6-6) or by M Division at designated firing sites.

D. Hazardous/chemical waste: Any nonradioactive solid waste intended for treatment or disposal that is corrosive to living tissue, toxic, flammable, reactive, carcinogenic, teratogenic, mutagenic, or infectious, or that in any way presents a potential hazard to human health or the environment, including waste meeting the RCRA hazardous waste definition in Title 40 Code of Federal Regulations (CFR) Part 261.

E. Liquid low-level radioactive waste: Liquid waste contaminated or potentially contaminated with radionuclides.

F. LLW: Low-level Radioactive Solid Waste: Solid radioactive waste that is not classified as high-level, transuranic, or spent nuclear fuel as defined in DOE Order 5820.2A.

G. Mixed Waste: Waste containing both radioactive and hazardous components as defined by the Atomic Energy Act of 1954, as amended, 42 USC 2011 *et seq* and RCRA respectively.

H. Nonradioactive waste: Waste, including equipment and materials, that has been surveyed (both smear and direct if appropriate) and determined to exhibit no added an/or induced radioactivity.

I. RCRA: Resource Conservation and Recovery Act of 1976, as amended by Hazardous Solid Waste Amendments (HSWA) of 1984 and the Medical Tracking Act of 1988.

J. RFI: RCRA Facility Investigation. This is the second step in the RCRA corrective action process and involves waste site and environmental setting characterization to define the nature and extent of contamination and determine the likelihood that contamination will threaten human health or the environment.

K. Solid waste: As defined in RCRA (40 CFR Part 261), any discarded material, either abandoned or recycled, including solids, liquids, semisolids, and contained gases. Solid waste can be hazardous, radioactive, or mixed waste, but source, by-product, and special nuclear material, as defined in the Atomic Energy Act, are exempt from the definition.

L. SWMU: Solid Waste Management Unit as defined in RCRA as amended 1984 Title II Section 1004. Any discernible unit at which solid wastes have been placed at any time, irrespective of whether the unit was intended for the management of solid or hazardous waste. Such units include any area at a facility where solid wastes have been routinely and systematically released.

M. SWMU Aggregate: Solid Waste Management Unit Aggregate -- A group of SWMUs formed by examining geographical relationships, applicable regulations, operating histories, waste types, methods of disposal, transport pathways and other potential relationships.

UNCONTROLLED

N. Tritium Waste: Solid waste (see definition "M") that is contaminated with tritium (^3H). Tritium waste that is contaminated with a tritium concentration <20 mCi/m^3 needs no special handling and is treated as low-level radioactive solid waste (LLW). Waste with a tritium concentration >20 mCi/m^3 must be specially packaged as described in AR 10-2.

O. TRU Waste: Transuranic Waste -- Solid Waste that is contaminated with alpha-emitting radionuclides with half-lives >20 years, and in concentrations >100nCi/g.

P. Waste pile: For purposes of this SOP, a waste pile is created during the RFI when an Operable Unit Project Leader (OUPL) or FTL chooses to pile borehole cuttings or sampling residue in lieu of using drums. All waste piles must be stacked on plastic obtained from stock and covered with plastic in a manner that avoids resuspension or runoff of contaminated soil. Waste in piles should be otherwise disposed of upon receipt of representative analytical results. Waste piles will not be used in any area not under institutional controls.

UNCONTROLLED

4.0 BACKGROUND AND/OR CAUTIONS

The FTL should consult with EM-7 concerning waste management prior to implementation of field work. EM-7 may be able to provide early guidance concerning the use of waste containers and waste transportation. Simultaneously, the FTL can provide EM-7 with an early estimate of waste to be generated.

To minimize the burden on existing waste management facilities at the Laboratory, it is important that waste generation is minimized. This can be achieved through using good technical judgement concerning the return of waste to SWMUs and through careful waste segregation. Using best scientific judgement, an FTL (in consultation with the OUPL) can anticipate when sampling will occur in areas strongly suspected of contamination and segregate waste generated during this operation from waste generated during the sampling of uncontaminated areas. This can be done both vertically and horizontally. For example, if past contamination has since been covered by 20 feet of clean fill, an FTL could drum or pile borehole cuttings from the upper 20 feet separately from cuttings generated during drilling in the contaminated zone.

5.0 EQUIPMENT

EM-7 can provide 55-gallon drums, labels, plastic liners, and covers, or these items can be obtained from stock.

6.0 PROCEDURE

A. Coordinate with EM-7 concerning waste management prior to field work.

B. The FTL must follow the decision flowchart shown in Attachment A for proper handling of RFI-generated waste.

C. The FTL will manage the collection of RFI Waste in a manner that ensures that radioactive/hazardous waste generation is minimized. Refer to AR-10-8, Waste Minimization, for guidance.

D. Borehole cuttings and other wastes may be returned to the borehole or otherwise disposed of within the boundary of the SWMU aggregate, if the OUPL and FTL jointly determine that some or all of the RFI work will be conducted in an area that it is unlikely to be contaminated, or if they determine that returning borehole cuttings or other waste to the borehole or elsewhere within the SWMU will not increase the likelihood of contaminant migration or increase the cost of eventual corrective action.

E. If it is decided that the waste should be analyzed, refer to EPA's SW-846, Test Methods for Evaluating Solid Waste, for instructions on valid methods of sampling and analysis.

F. If the waste is contaminated based on analytical results, then the FTL must follow the appropriate AR as stated in The Decision Flowchart (Attachment A). If the waste is subject to RCRA (e.g., the waste is either hazardous or mixed), it is critical that the FTL coordinate with EM-7 and EM-8 to implement AR 10-3 (and 10-2 for solid mixed waste) immediately. This includes hazardous waste labeling, establishment of less than 90-day storage areas within three days of the receipt of analytical results, and daily or weekly inspections as required. EM-8 should be contacted immediately for assistance in setting up 90-day storage areas; AR 10-3 provides additional guidance on RCRA compliance for hazardous wastes.

   NOTE: Methanol or other organic rinsates may become subject to RCRA immediately after use. 90-day storage areas for hazardous wastes should be set up immediately upon generation, unless the total volume of accumulated waste does not exceed 55 gallons. Hazardous wastes in quantities less than 55 gallons, or acutely hazardous waste in quantities less than one quart, should be stored in satellite storage areas. Again, EM-8 should be consulted for assistance in setting up such areas.

G. Borehole cuttings, sample residue, and other wastes (e.g., decontamination water) should be drummed or piled (as appropriate) and left on site within demarcated (yellow tape) exclusion zones pending analytical results if contamination is suspected and it is determined unwise to return waste to the borehole or SWMU. Waste piles will not be used in any area not under institutional controls. Drumming of wastes strongly suspected to be contaminated is preferred over piling since this

UNCONTROLLED

facilitates labeling and transportation. This is an additional precaution against contaminant migration. All waste piles must be stacked on new plastic obtained from stock and covered with new plastic so resuspension or runoff of contaminated soils is avoided. Waste in piles should be otherwise disposed upon receipt of representative analytical results.

H. The FTL must label segregated waste piles and drums as "pending analytical results" to ensure that representative sample analytical results can be used to determine the fate of the waste. The FTL is responsible for labeling the drums or piles in a manner that maintains a relationship between sample analytical results and drummed or piled waste.

I. Uncontaminated waste can be disposed on site (soil and water in accordance with National Pollutant Discharge Elimination System) or at the Los Alamos county landfill, but only after receiving written approval from EM-8.

J. The FTL should implement the appropriate AR based upon representative analytical results that show the waste to be contaminated. The ARs give action levels and methods of disposal for contaminated waste. In addition, the ARs provide appropriate waste transfer forms and instructions for completion.

K. Upon receipt of the proper forms, EM-7 will arrange for pickup and transport of waste. Contact EM-7 at 665-4600. Always use the current forms.

7.0 REFERENCES

The following references are directly associated with this procedure and should be reviewed before waste management activities are performed.

AR 3-7 Radiation Exposure Control
AR 6-6 Explosives
AR 10-1 Radioactive Liquid Waste
AR-10-2 Low-level Radioactive Solid Waste
AR 10-3 Chemical, Hazardous, and Mixed Waste
AR 10-4 Polychlorinated Biphenyls
AR 10-5 Transuranic (TRU) Solid Waste
AR 10-8 Waste Minimization
DOE Order 5820.2A Radioactive Waste Management
DOE Order 5400.5 Radiation Protection of the Public and Environment
LANL-ER-SOPs in Section 1.0, General Instructions
LANL Health and Safety Manual (Chapter 1 of the Laboratory Manual, Environment, Safety, and Health Supplement)
LANL Hazardous Materials Transportation Manual
40 CFR 261, Identification and Listing of Hazardous Waste
40 CFR 264, Standards for Owners and Operators of Hazardous Waste Treatment, Storage, and Disposal Facilities
55 FR 30798 (July 27, 1990), Corrective Action for Solid Waste Management Units at Hazardous Waste Management Facilities

UNCONTROLLED

EPA, 1986. "Test Methods for Evaluation of Solid Waste." U.S. Environmental Protection Agency report EPA-SW-846, Washington, D.C.

8.0 RECORDS

The following completed forms, as applicable, are the records generated during the use of this procedure (forms are available from EM-7, 665-4000 and sample forms can be found in the referenced ARs):

A. The Waste Profile Request (Form 10-3B)

B. The Radioactive Solid Waste Disposal Record, Application for Storage/Disposal, Form 10-2A (as appropriate)

C. The Disposal of Batch Liquid Waste, Form 10-1A (as appropriate)

D. The Hazardous Materials Transfer Form (HMT 1-1)

E. The Chemical Waste Disposal Request, Form 10-3A (as appropriate)

9.0 ATTACHMENTS

A. Decision flow chart for the management of ER Program waste generated during the RFI.

UNCONTROLLED

Decision Flow Chart for the Management of ER Program Waste Generated During the RFI

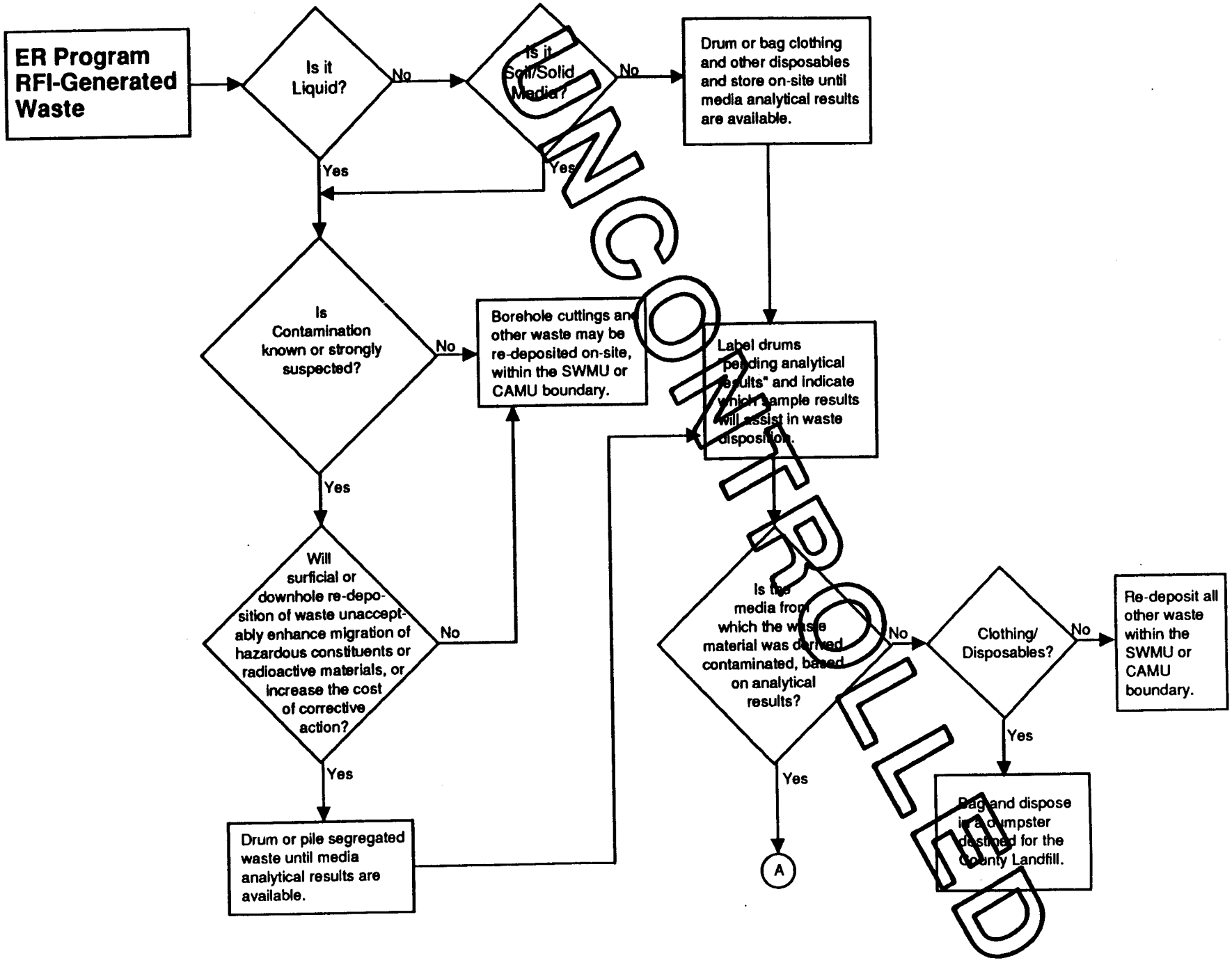

UNCONTROLLED

Decision Flow Chart for the Management of ER Program Waste Generated During the RFI (continued)

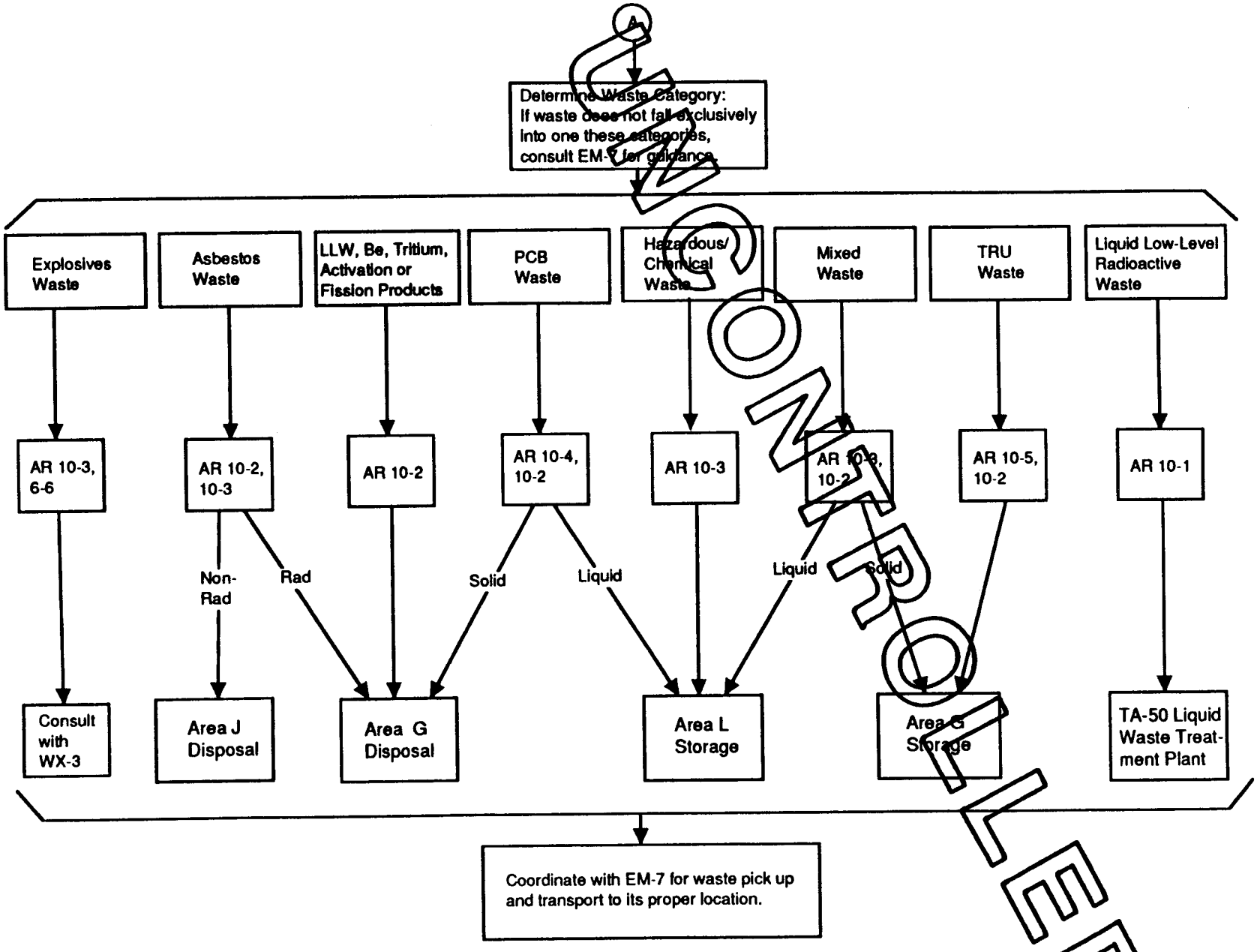

UNCONTROLLED

Los Alamos National Laboratory **Environmental Restoration Program** Standard Operating Procedure	No: LANL-ER-SOP-1.07	Rev: 0

OPERATIONAL GUIDELINES FOR TAKING SOIL AND WATER SAMPLES IN EXPLOSIVE AREAS

UNCONTROLLED

Prepared by	Betty W. Harris (Print Name)	Betty W. Harris (Signature)	11/21/94 (Date)
Quality Review by	David Bradbury (Print Name)	D. Bradbury (Signature)	1/18/95 (Date)
Technical Review by	John A. Sanchez (Print Name)	John A. Sanchez (Signature)	11/21/94 (Date)
Technical Review by	N/A (Print Name)	N/A (Signature)	N/A (Date)
PM Approval	JORG JANSEN (Print Name)	[illegible] (Signature)	3-16-95 (Date)
QPPL Approval	LAWRENCE A. SOUZA (Print Name)	L. A. Souza (Signature)	3/10/95 (Date)

Effective Date: 3/21/95

OPERATIONAL GUIDELINES FOR TAKING SOIL AND WATER SAMPLES IN EXPLOSIVE AREAS

Contents

1.0 PURPOSE 2

2.0 SCOPE 2
- 2.1 Applicability 2
- 2.2 Training 2

3.0 DEFINITIONS 3

4.0 BACKGROUND 4
- 4.1 Hazards 4
- 4.2 Precautions 4
- 4.3 Radiation Exposure 5

5.0 EQUIPMENT 5

6.0 PROCEDURES 5
- 6.1 Sampling Plan 6
  - 6.1.1 Areas Generally Accepted as Free of Explosive 6
  - 6.1.2 Low to Negligible Probability of HE Contamination Area 6
  - 6.1.3 Potential HE Contamination Area 6
- 6.2 Sample Collection Methods 7
- 6.3 Transport Samples from the HE Corridor to Group DX-16 7

7.0 REFERENCES 8

8.0 RECORDS 8

9.0 ATTACHMENTS 8

UNCONTROLLED

OPERATIONAL GUIDELINES FOR TAKING SOIL AND WATER SAMPLES IN EXPLOSIVE AREAS

1.0 PURPOSE

The purpose of this procedure is to provide operational guidelines for personnel taking surface and subsurface soil samples and water samples in the high explosive (HE) corridor specified below in Section 2.0.

2.0 SCOPE

The HE corridor is a controlled location within Los Alamos National Laboratory (the Laboratory) where explosives may be present in observable pieces, as particulate matter in the soil, and in rare cases, as a dissolved contaminant. At Technical Area (TA)-33, samples have the potential of being radioactively contaminated in addition to being contaminated with explosives. These guidelines apply to all personnel performing field operations and/or taking soil samples in the HE corridor TAs 6, -7, -8, -9, -11, -14, -15, -16, -18, -22, -28, -33, -36, -37, -39, -40, -67 (12), -68, -70 and -71]. Many HE areas are separated by buffer zones known to be free of explosive contamination. The HE corridor is made up of both HE areas and buffer zones.

2.1 Applicability

This procedure applies to all personnel entering HE corridors to survey, perform preliminary assessments, collect samples, and/or remediate an area within this zone. An HE expert must accompany the team during pre-assessment and be on-call while they are sampling.

2.2 Training

Personnel entering the HE corridor to perform field operations shall read the Site-Specific Health and Safety Plan, this Standard Operating Procedure (SOP) for the explosive corridor, as well as complete the HE Corridor Access Safety Course and the site-specific training at the host group. The HE Corridor Access Safety Course is a 1-2 hour briefing on the hazards associated with high explosives and the general rules for working in areas where HE may be present. A self-assessment is taken at the conclusion of the HE Corridor Access Safety Course. The site-specific training consists of reading the material in the visitor package concerning rules, guidelines, and hazards at the specific TAs. The site-specific training is conducted by the host group. A signature of understanding and acceptance is required. Personnel who need access to HE corridor at several TAs must complete the site-specific training for each of the TAs.

It is the responsibility of the Field Project Leader (FPL) to arrange and schedule the training including that required by the host group. It will be the responsibility of the host group to ensure that the appropriate internal approvals are obtained.

UNCONTROLLED

All personnel performing "HE spot tests" on potentially contaminated soil and/or other samples shall complete the Group DX-16 training course on the use of the HE spot test field kit.

3.0 DEFINITIONS

A. Field Operations: Any activity to be performed in the field, including, but not limited to, visual reconnaissance, preliminary sampling, RCRA Facility Investigations (RFI) sampling, and remedial actions.

B. Field Project Leader (FPL): Person responsible for all RCRA activity in a specific group of TAs. The FPL is responsible for ensuring that personnel taking samples in the HE exclusion areas are trained and the host group having jurisdiction over the location of the sample collection is informed of field operations.

C. Field Unit: Specified portions of TAs assigned to a Field Project Leader for Resource Conservation and Recovery Act (RCRA) activity.

D. Hazard Circles: The area in which hazards resulting from explosives firing or other explosive operations are present.

E. HE Spot Test Kit: This is a collection of chemical tests developed by the military and DX-16 to detect explosives on surfaces. The HE spot tests are approved only for homogeneous-type samples and cannot be used reliably for heterogeneous ones.

F. Heterogeneous Soil Sample Area: A heterogeneous soil sample location is an area that contains randomly dispersed pieces of explosives that are not well mixed in a sample volume and cannot be detected reliably using the HE spot test kit. The explosives pieces may be in large chunks or small pieces, they may be on the surface or buried. These areas constitute a potentially more hazardous situation than that of a homogeneous area. Examples of a heterogeneous areas are The land surrounding the TA-11 drop Tower, TA-22 Firing Site, or TA-67 (12) open firing Pit. Samples testing positive with the HE spot test kit and containing at least five percent explosives or those in which visible pieces of HE are found from heterogeneous areas must be submitted to DX-16 or another HE certified laboratory before being handled or treated further.

G. Homogeneous Soil Sample Area: A homogeneous soil sample location is an area that contains explosive materials with high solubility, well dispersed within the desired sample volume such that the explosives could be detected by the HE spot test.

H. Host Group: The operating group in the field unit where field operations are to take place. The host group will appoint "authorized" personnel to review the sampling plan, and authorize release of samples off-site for further analysis.

UNCONTROLLED

4.0 BACKGROUND

Since the mid-1940s, explosives development, processing, and testing operations have been performed at several TAs at the Laboratory. Explosive handling and operations are subject to much more stringent safety requirements than most other chemical process operations because of the inherently hazardous behavior of explosive compounds. During many years of explosives development, explosives and devices containing explosives may have been scattered or deposited both inside and outside of the hazard circles; therefore, extreme caution is required for all field operations in the field units that contain current or previous operations.

4.1 Hazards

- Impacting soil with metal objects or other hard surface items.
- Screwing crystals of explosives between lip and sample glass bottles.
- Handling chunks of weathered explosives.
- Detonation components or pieces- handle with care.
- Impact, pinch points, heat, sparks, and flames have the potential to initiate explosives. High-energy explosives and components containing high-energy explosives can be found in many colors and forms in which their presence may not be obvious.

4.2 Precautions

Aged explosives and explosives exposed to other substances have the potential of being sensitive. Strict guidelines are established for taking and handling potentially HE contaminated samples; the collection and removal of items, devices, or components of weapons assembly; and for transporting hazardous samples. The following requirements are enforced:

- Approved drilling plans must be in place before work commences.
- Whenever possible, tool used to take the sample must be aluminum, plastic or other approved material that will not produce a spark when struck against rocks, concrete, or metallic items.
- Containers used to store HE-contaminated samples shall not have metallic lids that screw on to glass or plastic containers or any other type of containment mechanism that allows "pinch points between metals, metal and glass, or

UNCONTROLLED

metal and other material. Plastic bottles with plastic screw-on or snap on lids are acceptable for sample containment.

- Heat sources, open flames or spark producing devices are prohibited in the explosive corridor. They have the potential of initiating explosives. A special permit is required when these devices are needed for sampling.

Chunks of explosives and any components, materials, or objects found during sampling shall not be handled or removed unless they are to be analyzed as part of the sample. If the object or component is an explosive, detonator, or component containing explosives, the sensitivity may be increased from exposure to the weather or by being mixed with unknown materials at the location. Removing mementos from the sites is not allowed.

At areas known to be contaminated with both HE and radiation, a health physics monitor, or Radiation Control Technician (RCT) must be present for sampling.

Group ESA/WMA-2 has SOPs which state that any amount of explosives in a soil sample represents a safety hazard. However, in 1993 the Laboratory's Explosive Review Committee agreed to allow soil samples with up to 5% explosives (determined using HE Spot Test Kit and HPLC) to be removed from the corridor as non-HE samples with the restriction that the Laboratory at DX-16 nor any other laboratory be allowed to concentrate the explosives in such samples.

Authorized persons from the host group or division must give written approval for the removal of all samples leaving the Explosive Corridor.

4.3 Radiation Exposure

Dosimeter badges will be worn by personnel in areas suspected of being contaminated with radiation. A RCT or a health physics monitor must scan personnel, equipment, vehicles, and supplies before leaving an area known to be contaminated with radiation.

5.0 EQUIPMENT

Equipment required for this procedure is that which is specified in the OU Sampling and Analysis Plan.

6.0 PROCEDURES

The following steps must be followed to collect, analyze, and approve off-site release of collected samples.

UNCONTROLLED

6.1 Sampling Plan

The sampling plan must be made available to the host group and it must include the exact location, type of sampling (surface, subsurface, or water), depth of sampling if sampling is subsurface, quantity of samples, analytes, and date/time for the work to be done. If subsurface sampling is requested, a detailed description of the method and type of equipment that will be used to extract the sample will be required. The FPL is responsible for arranging the site visit with the authorized host group personnel upon approval of the sampling plan.

The soil samples will fall into one of four categories: (1) buffer zones or areas free of explosives, (2) low to negligible probability of explosive contamination, (3) areas with potential for explosive contamination, and (4) areas with a potential for both explosive and radioactive contamination. The areas that potentially contain HE are further classified as being homogeneous or heterogeneous.

6.1.1 Areas Generally Accepted as Free of Explosive Contamination

If there is substantial historical data, direct knowledge, or if data from an existing or previous sampling program rule out the possibility of potential HE contamination, the host group can declare the location free of HE contamination and host group personnel can authorize the release of samples from the site for further analysis.

6.1.2 Low to Negligible Probability of HE Contamination Area

These locations are not known to have been exposed to explosives, however, contamination remains a remote possibility. A visual examination and the HE spot test kit will be used on homogeneous or heterogeneous soil mixtures to make an initial characterization. A visual examination at these areas can rule out the possibility of heterogeneous-type contamination. Negative results form the HE spot test kit will rule out the possibility of homogeneous contamination. Negative results from both the visual examination and the spot test will allow the samples to be released off-site upon written approval from the host group. If the visual examination results in HE material or any of the HE spot tests are positive, the location must be considered as an HE contamination area. The size of the contaminated area and the extent of the contamination will be determined by the HE expert.

6.1.3 Potential HE Contamination Area

These are locations that have a high probability HE contamination in either a homogeneous or heterogeneous nature. These locations include firing mounds, stream beds and/or drainages from sites with known contamination, and outfalls from HE processing facilities.

UNCONTROLLED

- Homogeneous Area: The explosives are uniformily dispersed throughout the sample. A reconnaissance-type sampling program will be used. If positive results are obtained for a minimum of one of the reconnaissance samples, then all of the samples in the defined area must be considered contaminated. For concentrations of HE in the sample exceed five percent, special arrangements will be made for transport and analyses. Packaging and labeling can be done at S-Site (ESA/WMA) and analyses may be done at Group DX-16 or any certified, commercial laboratory equipped to handle and analyze HE samples. The required SOPs, policies, and safety devices, and PPEs must be in place. Also, HE cannot be concentrated once removed from the solid or water, i.e., one shall not combine all 5-g samples to make a 25-g sample for easy storage.

- Heterogeneous Area: If the historical data or the spot test kit, or authorized host group personnel determine that the location is contaminated with visible pieces of explosives, we will categorize it as a heterogeneous field. These samples will be analyzed by an analytical laboratory and equipped to handle explosives. The samples can be approved by the host group for off-site release on an individual basis. If lab analysis results in HE contamination, the samples will be released off-site for further analysis with a special work permit.

6.2 Sample Collection Methods

To collect soil sample, follow the method outlined in LANL-ER-SOP-06.09, "Spade and Scoop Method for Collecting Soil Samples." For pure explosives or explosive components, call the HE expert assigned to your team to collect, package, label, and transport the sample. This person may delegate this task to Group DX-16, the Explosive Safety Group. Follow LANL-ER-SOP-06.05, "Soil Water Samples," and LANL-ER-SOP-06.13, "Surface Water Samples," when necessary.

An authorized HE expert from host group or personnel designated by the host group as acceptable to perform HE related activities, must be present during the pre-assessment and on-call during sample collection. Shovels, scoops, or any other equipment used to remove the sample shall be constructed of aluminum or wood. Equipment and methods required for subsurface sampling will be reviewed on an individual basis in the same manner that excavation and trenching work by contractors in the HE exclusion areas are reviewed. Removal of samples to be tested for HE shall be performed using the "scoop" method, i.e., the samples are to be scooped and saturated with the liquids from the HE spot test kit.

6.3 Transport Samples from the HE Corridor to Group DX-16 Analytical Laboratory

HE contaminated samples and potentially HE contaminated samples requiring laboratory analysis shall be transported from the specific HE area to the DX-16

UNCONTROLLED

S-Site packaging laboratory using the plaqued vehicle assigned to transport explosives. Also, one must follow existing Laboratory guidelines specified in the latest edition of the Hazardous Materials Transportation Manual and any additional hazardous material shipment requirements specified by the specific location or host group. Off-site transportation of HE samples must follow the Department of Transportation (DOT) regulations.

7.0 REFERENCES

LANL-ER-SOP-06.09, Spade and Scoop Method for Collecting Soil Samples.
LANL-ER-SOP-06.05, Soil Water Samples
LANL-ER-SOP-06.13, Surface Water Samples
LANL-ER-SOP-01.04, Sample Control and Field Documentation
LANL-ER-AP-02.01, Procedure for LANL ER Records Management

8.0 RECORDS

Training documentation checklist
Field notebook
Daily Activity Log (LANL-ER-SOP-01.01)

Activities in the HE corridor must be documented in the daily activity log or field notebook. Any deviations in conditions or problems must be noted in the daily activity log or field notebook (LANL-ER-SOP-01.04). The FPL is responsible for transferring the records generated under this procedure to the Environmental Restoration Records Processing Facility in accordance with LANL-ER-AP-02.01, "Procedure for LANL ER Records Management."

9.0 ATTACHMENTS

Attachment A - Location of TAs in Which Explosive, Research Development, and Testing Have Occurred at Los Alamos National Laboratory (Map 1)

UNCONTROLLED

Los Alamos National Laboratory Environmental Project Office
LOCATION OF TAs IN WHICH EXPLOSIVE, RESEARCH DEVELOPMENT, AND TESTING HAVE OCCURRED AT LOS ALAMOS NATIONAL LABORATORY
MAP 1

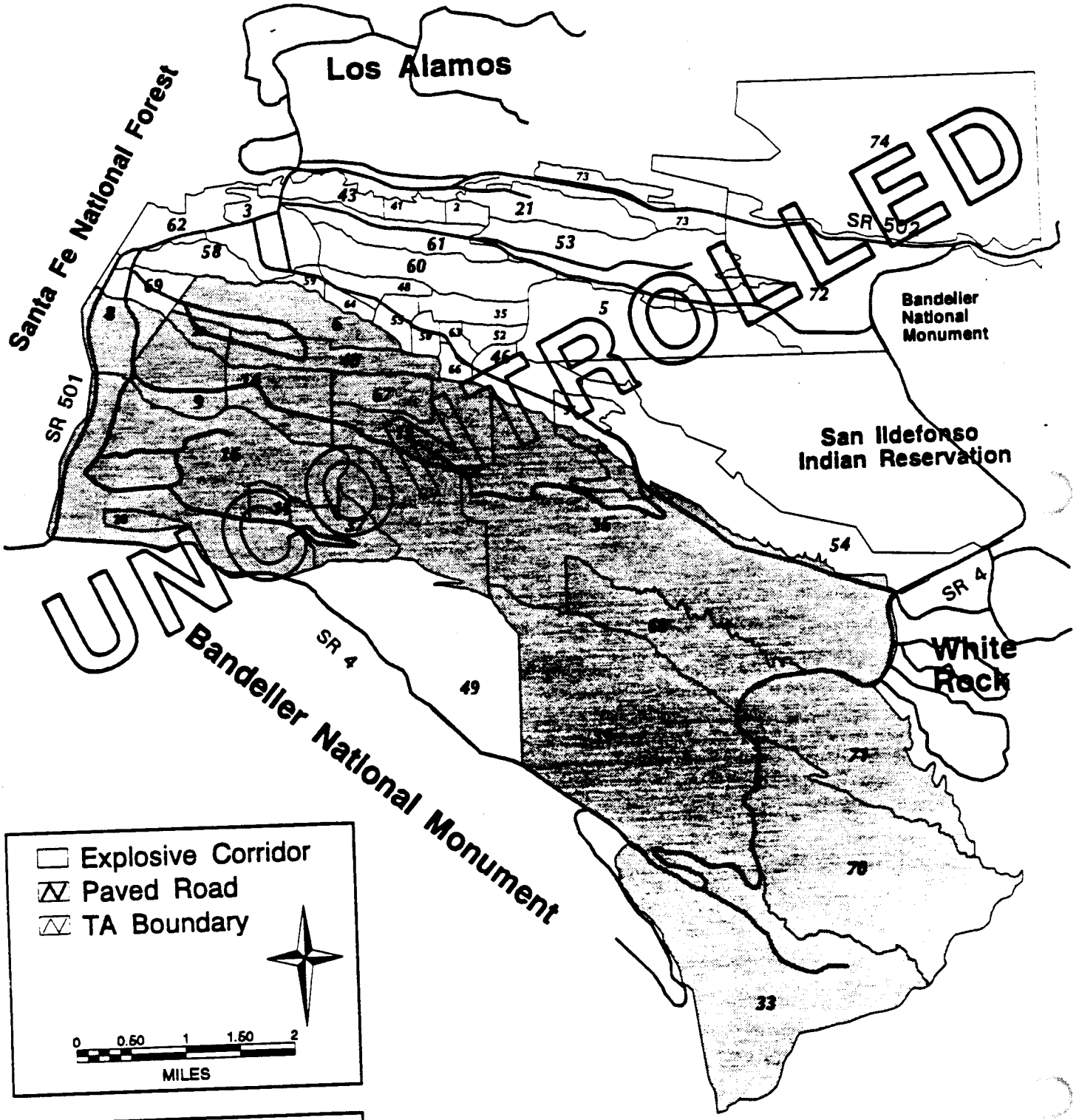

1983 North American Datum
Projection:
New Mexico State Plane Coordinate System, Central Zone (Transverse Mercator)

Notice: Information on this map is provisional and has not been checked for accuracy.

FIMAD G102825 10 Dec 94

LOS ALAMOS NATIONAL LABORATORY
ENVIRONMENTAL RESTORATION PROGRAM
STANDARD OPERATING PROCEDURE

NO: LANL-ER-SOP-01.08, REV: 0

FIELD DECONTAMINATION OF DRILLING AND SAMPLING EQUIPMENT

Prepared By	Charles Wilson (Print Name)	(Signature)	7/22/94 (Date)
QPPL Approval	Lawrence A. Sonza (Print Name)	(Signature)	3/9/95 (Date)
Technical Review by	Stephen K. Stellavato (Print Name)	(Signature)	09-AUG-94 (Date)
Quality Review by	Patricia F. Gaudio (Print Name)	(Signature)	8/22/94 (Date)
PM Approval	JORG JANSEN (Print Name)	(Signature)	3-20-95 (Date)

Effective Date: 3/31/95

UNCONTROLLED

FIELD DECONTAMINATION OF DRILLING AND SAMPLING EQUIPMENT

Contents

1.0 PURPOSE 2

2.0 SCOPE 2
- 2.1 Applicability 2
- 2.2 Training 2

3.0 DEFINITIONS 2

4.0 BACKGROUND AND/OR CAUTIONS 2

5.0 EQUIPMENT 3

6.0 PROCEDURE 3
- 6.1 Decontamination Areas 3
- 6.2 Drilling/Excavation Equipment Decontamination 5
- 6.3 Sampling Equipment Decontamination 7

7.0 REFERENCES 9

8.0 RECORDS 9

9.0 ATTACHMENTS 9

UNCONTROLLED

FIELD DECONTAMINATION OF DRILLING AND SAMPLING EQUIPMENT

1.0 PURPOSE

This standard operating procedure (SOP) provides guidance for the field decontamination of drilling and sampling equipment to help ensure the integrity of soil, sediment, rock, water, and other samples collected from potentially contaminated sites and to minimize the potential for cross contamination between sampling locations. Implementation of this procedure will help protect site and community personnel by requiring that equipment not be removed from a controlled area without proper decontamination.

2.0 SCOPE

This procedure addresses general field decontamination of drilling and sampling equipment.

2.1 Applicability

This SOP is applicable to personnel engaged in the collection of surface and subsurface soil, sediment, rock, water, and other samples using hand tools (e.g., hand auger, shovels, scoops, etc.), mechanical drilling and sampling equipment, or excavation equipment for the purpose of characterizing a potentially contaminated site for the Environmental Restoration (ER) Program. This procedure may be used to decontaminate a wide range of sampling equipment, but may need modification to adapt to specific sampling applications. This procedure applies only to decontamination activities that are performed in the field.

2.2 Training

The field team leader (FTL) is responsible for proper implementation of this procedure and shall verify that he/she and those field team members engaged in sampling documentation have read and understand this procedure. The FTL will maintain proper training documentation in accordance with LANL-ER-SOP-01.01, General Instructions for Field Investigations.

3.0 DEFINITIONS

A. Cross contamination: The inadvertent introduction of contaminated materials from one location to another.

4.0 BACKGROUND AND/OR CAUTIONS

To help ensure that samples collected for the purpose of characterizing a potentially contaminated site are representative of the point place where they are collected, the equipment used to collect those samples should be decontaminated between each sampling event. Decontamination helps minimize the potential for cross contamination

UNCONTROLLED

between sampling locations and helps protect site and community personnel by requiring that equipment not be removed from the site without proper decontamination. The decontamination process applied should be tailored to the types of contaminants anticipated and should be minimized to the degree possible to reduce the volume of decontamination wastes produced.

This procedure addresses decontamination for both radioactive and hazardous chemical constituents. A dry decontamination process is used first for the primary purpose of removing soil that may be contaminated by radioactive and/or hazardous constituents, followed by a wet decontamination process intended to remove the remaining constituents. Dry decontamination is essentially the mechanical and/or chemical cleaning of the equipment without the excessive use of liquids. Dry decontamination is used first to minimize liquid waste production, especially the production of liquid mixed wastes. The solid waste produced by the dry decontamination process, however, may contain both radioactive and hazardous chemical constituents and may be a mixed waste. Wet decontamination is essentially a washing process to remove constituents that are not removed by the dry decontamination process.

In the interest of waste minimization, refer to Section 5.1.8 of AP 5.3 to determine whether extraneous soils removed by mechanical means can be returned to the site of origin (e.g., using a wire brush to remove and return soil directly to the borehole from an auger flight).

Decontamination procedures shall be conducted in accordance with the applicable Site-Specific Health and Safety Plan to help ensure that personnel performing the decontamination are protected from equipment-related accidents and from exposures to radioactive, hazardous, and/or mixed wastes. Implementation of these procedures ma involve steam cleaning of drilling, excavation, and sampling equipment. The water from a steam cleaner is under high pressure and temperature and is capable of causing burns and scalding.

UNCONTROLLED

5.0 EQUIPMENT

The equipment recommended for this procedure is listed in Attachment A.

6.0 PROCEDURE

Optional approaches for decontamination are presented below to provide flexibility to the FTL in addressing site-specific situations.

6.1 Decontamination Areas

A. Decontamination areas shall be established to provide "dry" and/or "wet" decontamination, depending on the decontamination needs at the site.

B. The dry decontamination area is used to remove loose, contaminated soil adhering to the equipment. This area may be located where the drilling or excavation is taking place, to minimize the potential for spreading contaminants from the site. If contamination is potentially extensive or i

environmental factors such as wind may cause uncontrolled dispersal of potentially contaminated soil or other substances, decontamination may, at the discretion of the FTL, be conducted within an open-top solids containment vessel. Prior to decontamination, clean plastic sheeting should be placed on the ground or inside the solids containment vessel to collect material removed from the equipment. Waste material removed from the equipment should be managed as specified in AP 5.3. For example, when steel brushes are used to clean soil particles off auger flights, at the location of the open borehole, this material may be returned to the hole as per guidance from AP 5.3. An equipment table, covered with clean plastic sheeting, may be placed near the dry decontamination area to facilitate disassembly of the contaminated sampling equipment. Drums may be placed nearby to contain waster material.

C. The wet decontamination area is used to remove contaminants that were not removed during dry decontamination. The wet decontamination area equipment varies depending upon the nature, size and complexity of the sampling operation and of the equipment to be decontaminated. For sampling tasks involving drilling or excavating equipment, the wet decontamination area must have a liquid containment vessel, and may involve a high-pressure steam cleaner, a pump to transfer liquid wastes to drums, and drums with liners for storing liquid wastes. The drums should have secondary containment. An equipment table, covered with clean plastic sheeting, may be placed next to the wet decontamination area to facilitate reassembly and wrapping of the decontaminated equipment pending further use. For sampling tasks using hand augers or other small equipment, the wet decontamination area may consist of tubs, buckets, brushes and spray bottles. Separate buckets or tubs shall be used for washing and rinsing this equipment. The use of spray bottles for rinsing minimizes the generation of water that must be collected for disposal.

D. Whenever practicable, the decontamination area should be placed downwind of the site personnel, giving consideration to the anticipated contaminants, detection of airborne contaminants above background, wind and weather conditions, and other site considerations such as site layout, access, and other site activities. Where possible, the decontamination area should not be located downwind of dust-producing site operations that could contaminate the equipment. The decontamination area may be located adjacent to the designated and secured drum storage area to reduce the need to move drums around the site.

E. The decontamination of equipment that is to be removed from a contaminated area to a controlled or uncontrolled area shall be performed with the approval and oversight of the Site Safety Officer. Decontaminated equipment shall be screened by a Radiological Control Technician (RCT) or designee prior to release if radiation is potentially present at the sampling site. The radiological screening may include swipe and/or smear surveys as well as direct instrument surveys. If radiological screening conducted before

UNCONTROLLED

wet decontamination shows that no radioactive contamination is present, a second radiological screening following wet decontamination is not required.

6.2 Drilling/Excavation Equipment Decontamination

A. Prior to commencing sampling operations for a project, those parts of the drilling or excavation equipment that will come in contact with the sampled media shall be screened for radiological contamination and volatile organics. If soil adhering to the equipment is found to be contaminated during the field screening, dry decontamination procedures shall be applied as described in Paragraph B below. If hazardous chemicals or residual radioactive contaminants are potentially present, any dry decontamination shall be followed by the wet decontamination procedures described in Paragraph C below. In addition, a visual inspection should be performed of the entire equipment, and gross residuals such as dirt from previous operation may be removed at the discretion of the FTL if it could affect the objectives of the sampling operation or has the potential of falling from the equipment and contaminating the site.

B. If contamination is found or suspected on the surface of the equipment, or in the soil on the equipment, that piece of equipment shall be decontaminated in the dry decontamination area. The coarse contaminated material may be gently removed using a steel brush, and the more cohesive material may be removed with a flat scraper such as a wooden spatula or paint stirring stick. A water spray bottle may be used to lightly moisten dry soil being removed from the equipment, if needed to control dust. Only the minimum amount water spray should be used to keep the waste moisture content low.

After the coarse contaminated material has been removed, remaining contamination may be removed by washing with Fantastik™ (an alkaline, waxless household cleaner) and/or Radiac™ (a commercial cleaner for removing radioactive particles), or similar product, followed by air drying or other appropriate methods. If radioactive contaminants are present, the equipment may be periodically surveyed with hand-held radiation detectors during the course of decontamination to determine where contaminated areas are located. Upon completing the decontamination process, swipe and/or smear samples may be collected from the equipment at the discretion of the RCT or designee, or as required by the Los Alamos National Laboratory (the Laboratory) Radiological Control Manual, and either submitted to a laboratory for radiological analysis or counted on site if appropriate portable equipment is available.

C. If hazardous and/or residual radioactive contamination is still present after dry decontamination, a wet decontamination process shall be used. The liquid containment vessel should be empty at the start of each wet decontamination campaign, especially if the previous wet decontamination did not require a methanol rinse, so that the volume of wastes generated by the decontamination process can be minimized.

UNCONTROLLED

In general, a non-phosphate detergent and water wash with a water rinse is adequate for most decontamination requirements. Alternatively, the contaminants may be removed by steam cleaning, by washing with Alconox™ soap, or by another appropriate method, followed by a water wash using a standard scrub brush. The equipment shall then be rinsed with clean water. A second rinse should be performed using distilled or deionized water, particularly in cases where the chemistry of the water supply is not monitored on a regular basis. Where trace metals are anticipated, an acidic rinse may follow the detergent wash and rinse in the decontamination process to remove the trace metals, followed by a distilled or deionized water rinse. If organic contaminants are expected, a rinse with a solvent such as methanol may follow the detergent wash and rinse to remove the organics. If used, the solvent shall either be wiped off or allowed to evaporate completely, and shall be followed by a water rinse. Prior to using an acid or solvent, confirmation is required that the particular acid or solvent used is not a contaminant of concern at the site. Decontamination rinsate containing solvents or acids may need to be analyzed for pH and/or ignitability prior to disposal.

The equipment is then allowed to air dry or is dried with clean rags, towelettes, paper towels, or by other appropriate methods. Only those parts of the equipment that come into direct contact with the potentially contaminated media need to be decontaminated in this manner. If an equipment (rinsate) blank is required by the governing sampling and analysis plan or quality assurance project plan, a deionized water rinsate should be collected in accordance with LANL-ER-SOP-01.05, Field Quality Control Samples, following completion of the decontamination process.

D. Decontaminated drilling and excavating equipment not in active use, such as hollow-stem auger sections, drill rods, down-hole hammers, and bits, may at the discretion of the FTL be wrapped in plastic or otherwise protected from dirt and dust until needed.

E. In the event that radioactive contamination is fixed on the equipment surface and cannot be removed using these field decontamination procedures, the FTL shall wrap the equipment in clean plastic sheeting or otherwise isolate it from cross contamination, label the equipment according to the RCT's instructions, and set the equipment aside pending a decision to conduct further decontamination at a decontamination facility or to dispose and replace the equipment.

F. The successful decontamination of radiologically contaminated equipment shall be verified by the RCT using field survey techniques. The equipment is considered radioactively clean and suitable for sampling use if it meets the acceptance criteria for release from the Laboratory property specified in the Laboratory Radiological Control Manual.

UNCONTROLLED

G. Following the initial decontamination, the drilling or excavation equipment is typically not decontaminated again until completion of the specific borehole or excavation, unless cross contamination within a single borehole or excavation is of concern. The need to decontaminate during drilling or excavation may be determined by the FTL from field screening or may be indicated in drilling plans, excavation plans, or other work plans. The internal surfaces of augers have potential to come into contact with contaminated soil and should be screened periodically prior to demobilization.

H. Upon demobilization at a specific borehole or excavation, those parts of the drilling or excavation equipment that came in contact with the sampled media shall be decontaminated before mobilizing at another site, using methods appropriate for the type of contamination potentially present. The equipment shall be surveyed with hand-held instruments capable of detecting residual radioactive material at levels low enough to detect the radiological constituents of concern. Swipe and/or smear samples may be collected from the equipment at the discretion of the RCT or designee, or as required by the Laboratory's Radiological Control Manual, and either submitted to a laboratory for radiological analysis or counted on site if appropriate portable equipment is available. Decontamination shall be conducted as described in Paragraphs B and C above. In addition, a visual inspection should be performed of the entire equipment, as described in Section 6.2, Paragraph A.

I. Contaminated soil shall be removed from the dry decontamination area following each decontamination campaign and disposed of in accordance with AP 5.3

J. Water in the liquid containment vessel shall be removed from the vessel following each decontamination campaign and disposed of in accordance with AP 5.3.

K. Equipment decontamination personnel shall follow the requirements of the Site-Specific Health and Safety Plan when removing personal protective equipment (PPE). Rags, plastic, PPE, etc. shall be disposed of in accordance with AP 5.3.

L. Upon completion of site sampling and decontamination activities, the decontamination area shall be secured.

6.3 Sampling Equipment Decontamination

A. Both sample collection and sample preparation equipment are decontaminated according to the procedure described in this section.

B. After sampling equipment has been used to collect each sample, the equipment and sample shall be screened with hand-held radiation dete[illegible]s

UNCONTROLLED

to evaluate personnel safety and radioactive contamination. If safe, the sampling equipment shall then be disassembled, as appropriate to the type of equipment, on a clean surface such as a clean plastic sheet. The sample shall be removed (except in the case of Shelby tubes) and processed according to the appropriate SOP. If Shelby tubes are used to collect samples, the sample is generally left inside the tube during shipment; in such cases the outside of the tube should be screened prior to shipment and decontaminated as required.

C. If the radiological screening indicates that the sampling equipment is radiologically contaminated, after the sample is removed the equipment shall be decontaminated as described in Section 6.2, Paragraphs B and C. In the event that radiological contamination is fixed on the equipment surface and cannot be removed using these field decontamination procedures, the process described in Section 6.2, Paragraph E shall be followed.

D. If hazardous contamination is potentially present, the equipment shall be decontaminated as described in Section 6.2, Paragraphs B and C. If an equipment (rinsate) blank is required, it should be collected in accordance with the instructions in Section 6.2, Paragraph C.

E. Decontaminated sampling equipment not in active use should be protected from dirt and dust, and segregated from contaminated equipment until needed.

F. Minimizing the amount of sampling equipment used during sampling activities will minimize the time required for decontamination as well as the generation of wastes. Segregation of solid and liquid decontamination wastes is emphasized in this procedure to minimize the volume of liquid wastes generated. Refer to LANL-ER-AP-05.3, Management of Environmental Restoration Program Waste.

G. Sample preparation equipment used to collect subsamples that will constitute a single composite sample does not need to be decontaminated between each subsample collection.

H. If the rinsate in the liquid containment vessel includes methanol, it should be transferred to a separate lined drum prior to additional methanol-free decontamination to minimize cross contamination and potentially mixed waste generation. Drums should not be overfilled to allow for expansion. Methanol-soaked rags or towelettes should be bagged and placed into a separate lined drum. Waste containers shall be labeled and handled in accordance with AP 5.3.

I. Equipment decontamination personnel shall follow the requirements of the Site-Specific Health and Safety Plan when removing PPE. Rags, plastic, PPE, etc. shall be bagged, drummed, labeled and handled as described in AP 5.3.

UNCONTROLLED

7.0 REFERENCES

The following procedures are directly applicable to this procedure, depending upon the type of sampling activity, and those that are pertinent should be reviewed prior to field operations:

LANL-ER-AP-02.1, Procedure for Laboratory ER Records Management
LANL-ER-AP-05.3, Management of Environmental Restoration Program Waste
LANL-ER-SOP-01.01, General Instructions for Field Investigations
LANL-ER-SOP-01.04, Sample Control and Field Documentation
LANL-ER-SOP-01.05, Field Quality Control Samples
LANL Radiological Control Manual, LM 107-01, December 1, 1992
U.S. Department of Energy, 1987. "The Environmental Survey Manual." Decontamination Guidance, Appendix G. Report DOE/EH-0053. Washington, D.C.

8.0 RECORDS

Training documentation checklist
Field notebook
Daily Activity Log (LANL-ER-SOP-01.01)

General decontamination activities shall be documented in the daily activity log or field notebook. Should deviations in conditions or problems occur, they should be noted in the daily activity log or field notebook (LANL-ER-SOP-01.04). The FTL is responsible for transferring the records generated under this procedure to the ER Records Processing Facility in accordance with LANL-ER-AP-02.1, "Procedure for Laboratory ER Records Management."

UNCONTROLLED

9.0 ATTACHMENTS

Attachment A – Recommended Equipment and Supplies Checklist for Field Decontamination of Drilling and Sampling Equipment.

Los Alamos National Laboratory Environmental Restoration Project
RECOMMENDED EQUIPMENT AND SUPPLIES CHECKLIST FOR FIELD DECONTAMINATION OF DRILLING AND SAMPLING EQUIPMENT

UNCONTROLLED

____high-pressure portable steam cleaner
____liquid containment vessel and support rack
____buckets, tubs, plastic wading pools, as needed
____solids containment vessel and support rack
____shovel
____electrical generator (if power source is not available) and fuel
____power cord (to connect steam cleaner to generator)
____two sturdy equipment tables for tool assembly and disassembly
____portable liquids pump and 10' (minimum) discharge hose
____steel brushes and standard scrub brushes
____Alconox ™ soap + acid solution if required by the FSP
____pesticide-grade methanol + acid solution if required by the FSP
____potable water (from an approved source with known chemistry) for steam cleaning
____organic-free distilled deionized water
____garden-type sprayer for deionized and potable water, and water "squirt" bottle for methanol
____Fantastik™ and/or Radiac™ wash cleansers, or equivalent
____wooden spatula or paint stirring sticks
____box of clean, dry lint-free rags and/or disposable towelettes
____sponges
____roll of heavy plastic sheeting
____heavy-duty stapler and staples
____drums and liners (for liquids and solids) and covers
____wooden pallets (for drums)
____secondary containment for drums containing liquids
____labels and marking pens
____one gallon sealable plastic bags
____plastic trash bags

____paper towels

____duct tape

____appropriate personal protective equipment (PPE), as specified in the applicable Operable Unit Site Safety and Health Plan

____bound field log books and ink pens

CST-17 (665-4000) can provide 55-gallon drums, labels, plastic liners, and covers, or these items can be obtained from stock.

UNCONTROLLED

ENVIRONMENTAL RESTORATION PROGRAM
INTERIM CHANGE NOTICE

EFFECTIVE DATE : (Dist. Date) ICN No. 13 Page 1 of 1

Document No. SOP-01.09 **Rev.** 0 **Title:** Management of ER Program RMMAS

Reason for Change:

New procedure ER-SOP-10.10, "Radiation Scoping and Background Surveys" needs to be referenced as the method for establishing the presence of radiation and radioactive materials on PRSs.

Description of Change (Specify page, paragraph, and/or section revised, and clearly write new text to be incorporated in the document).

Section 4.2, 2nd paragraph, last sentence: delete ". . .LANL-ER-SOP-10.07, Field Monitoring for Surface and Volume Radioactivity Levels", and replace with ". . . LANL-ER-SOP-10.10, Radiation Scoping and Background Surveys."

Section 7.1, add: "LANL-ER-SOP-10.10, Radiation Scoping and Background Surveys.

Change Requested by:	JOHN MANN (Print)	(Signature)	10-19-95 (Date)
Technical Reviewer	(Print)	(Signature)	10/24/95 (Date)
Quality Program Project Leader ~~Program Manager~~ ~~Approval~~:	Lawrence A. Souza (Print)	(Signature)	11/3/95 (Date)
ER Project Manager ~~Quality Program Project Leaser (QA review and approval)~~	Jorg Jansen (Print)	(Signature)	11-10-95 (Date)

UNCONTROLLED

J95350.SOP

Los Alamos National Laboratory **Environmental Restoration Program** Standard Operating Procedure	No: LANL-ER-SOP-01.09 Rev: 0

Management of Environmental Restoration Program Radioactive Material Management Areas

UNCONTROLLED

Prepared by	JOHN MANN (Print Name)	(Signature)	2-[illegible] (Date)
Quality Review by	PATRICIA M TILLERY (Print Name)	(Signature)	5/2/95 (Date)
Technical Review by	ROBERT MURPHY (Print Name) CHAIRMAN, RAMA ADVISORY TEAM	(Signature)	4-26-95 (Date)
PM Approval	JORG JANSEN (Print Name)	(Signature)	5-22-95 (Date)
QPPL Approval	LAWRENCE A. SOUZA (Print Name)	(Signature)	5/22/95 (Date)

Effective Date: 5/31/95

MANAGEMENT OF ENVIRONMENTAL RESTORATION PROGRAM RADIOACTIVE MATERIAL MANAGEMENT AREAS

Table of Contents

1.0 PURPOSE 1

2.0 SCOPE 1
- 2.1 Applicability 1
- 2.1 Training 1

3.0 DEFINITIONS 1

4.0 BACKGROUND AND CAUTIONS 2
- 4.1 Background 2
- 4.2 Caution 2

5.0 EQUIPMENT 2

6.0 PROCEDURE 2
- 6.1 Establishing an RMMA 2
  - 6.1.1 Sites on DOE-Controlled Land 2
  - 6.1.2 Sites on Private Property 3
- 6.2 Managing an RMMA 3
  - 6.2.1 Sites on DOE-Controlled Land 3
  - 6.2.2 Sites on Private Property 4
- 6.3 Closure of an RMMA 4

7.0 REFERENCES 4
- 7.1 Cited References 4
- 7.2 Reference Material Necessary for Implementation of this SOP 5

8.0 RECORDS 5

9.0 ATTACHMENTS 5

UNCONTROLLED

MANAGEMENT OF ENVIRONMENTAL RESTORATION PROGRAM RADIOACTIVE MATERIAL MANAGEMENT AREAS

1.0 PURPOSE

This procedure implements the requirements of Section 7.0 of the Los Alamos National Laboratory (Laboratory) Final Radioactive Material Management Area (RMMA) Program Plan, including environmental restoration (ER) operations on non-DOE land and the closure of RMMAs on both DOE and non-DOE land.

2.0 SCOPE

2.1 Applicability

This procedure is applicable during ER activities such as site investigation, corrective actions, and decommissioning on both DOE-controlled and private property. When ER activities are conducted in areas that could generate radioactive wastes, screening results, process knowledge, or radioanalysis will be used to determine the necessity for establishing RMMAs or other controls.

2.2 Training

The field team leader (FTL), who will serve as the site RMMA Manager, and the radiological screening personnel (RSP), health physics technician (HPT), or radiological control technician (RCT), must document that they have read and understood this procedure. Additionally the field team leader must be familiar with the RMMA Program Plan, Section 7.0 and must have completed all the training indicated in Section 8.3 of that document except the Site-Specific RMMA Waste Management OP

UNCONTROLLED

3.0 DEFINITIONS

RMMA: An area in which waste will be generated and a reasonable potential exists for contamination because of the presence of unencapsulated or unconfined radioactive material: an area that is potentially exposed to beams or other sources of particles (neutrons, protons, etc.) capable of causing measurable activation.

RMMA Manager: The individual with overall functional responsibility for an RMMA. For field work in the ER Project, the FTL fills this role. A RMMA Manager can be responsible for multiple RMMAs, as appropriate for the size and complexity of operations in the RMMAs. The RMMA Manager will have the authority to suspend waste generation operations within a RMMA if necessary to ensure program compliance.

RMMA Program Plan: The Laboratory's written plan describing the program for managing and controlling wastes from RMMAs.

4.0 BACKGROUND AND CAUTIONS

4.1 Background

This procedure is tailored to meet the needs of the ER Project and the objectives of the DOE/AL Waste Moratorium as described in the RMMA Program Plan. Waste control, segregation, and management follows the requirements of LANL-ER-AP-05.3, Management of Environmental Restoration Program Wastes.

Radioactive ER waste generated on private land but that originated from National Laboratory operations at the Laboratory is also handled in a manner that meets the DOE/AL Performance Objective for the Waste Moratorium.

4.2 Caution

RMMAs meet the specifications indicated later in this document for establishment, control, and closure. However, the way these areas are controlled on Laboratory property, on other DOE-controlled property, and on non-DOE land is different. On Laboratory and DOE-controlled property, the ER Project closes the RMMA after waste-generating activities are complete, whether radionuclides or radiation are still present in the area or not. On non-DOE land, management of RMMAs is conducted in such a manner that waste is handled in accordance with DOE objectives and the public is protected from possible releases or spread of contamination from the site in accordance with DOE Order 5400.5, Radiation Protection of Public and the Environment.

Establishing the presence of radioactivity and/or radioactive materials on the potential release site (PRS) is the most crucial step of the RMMA process. Implicit in the radioactivity determinations is the establishment of the proper background counts or count rates before making any decisions on the presence or absence of radiation or radioactive materials in or on soil, process samples, personnel, or equipment. This process is carried out using LANL-ER-SOP-10.07, Field Monitoring for Surface and Volume Radioactivity Levels.

UNCONTROLLED

5.0 EQUIPMENT

Instruments, signs, radiation and contamination control equipment are specified in the appropriate procedures used by RCTs and others in the field. Yellow and magenta signage and ropes/barriers will not normally be used on private property.

6.0 PROCEDURE

6.1 Establishing an RMMA

6.1.1 Sites on DOE-Controlled Land

Before beginning any waste-generating activities, the FTL or Decommissioning Project Leader (DPL) reviews the radiation profiles from the PRS or decommissioning project, and the site-specific work plan for general activity levels and the presence of hot spots

as well as for all information on process knowledge from the site history. The following criteria are used as benchmarks with which site information is compared to decide if a RMMA is required within the site:

- General surface contamination is detected at levels greater than background levels as discussed in LANL-ER-SOP-10.07.

- General beta-gamma count rates near the surface of the ground are greater than the minimum detectable activity (MDA) of the survey meter, as defined in LANL-ER-SOP-10.07.

- Samples or other potentially radioactive materials screened with hand-held alpha or beta-gamma radiation detectors prior to removal from the area give readings above the MDA of the instrument.

When a RMMA is required, the FTL, as RMMA Manager, with guidance from the HPT/RCT and/or Health Physics Operations (ESH-1) staff, is responsible for the establishment, control, and closure of RMMAs. The FTL fills the ER/D&D RMMA Notification Form (Attachment 7-1 of the Final RMMA Program Plan) with copies as indicated on the form; this establishes the area as a RMMA.

The RMMA is then roped off, posted, and controlled by the RCT in accordance with the requirements in the LANL Radiological Control (RadCon) Manual.

6.1.2 Sites on Private Property

The RMMA process is the same for private property except for the following:

- Operations are conducted only after the Access Agreement is signed by the land owner and appropriate Laboratory signatories.

- Posting, barriers, and access control are not installed until waste-generating activities begin. Access is then controlled while waste-generating activities are under way.

- Posting, barriers, and access control follow the general guidance of the LANL RadCon Manual, but yellow and magenta ropes, signs, or wording on the signs specified by the LANL RadCon Manual are not necessarily used. Instead, signage and barriers developed specifically for the ER private property are used.

6.2 Managing an RMMA

6.2.1 Sites on DOE-Controlled Land

RMMAs are set up and controlled as required by the RMMA Program Plan. Decontamination is conducted according to site-specific health and safety plan directions. Contaminated wastes from decontamination and waste from the site are managed in accordance with LANL-ER-AP-05.3.

UNCONTROLLED

6.2.2 Sites on Private Property

The signed Access Agreement between a land owner and the Laboratory allows the ER activities detailed in the site-specific Work Plan to be conducted on that land. The FTL takes the precautions indicated below to ensure that all waste coming from that area is segregated and otherwise managed:

- On privately owned areas under investigation or remediation, the radiological areas are controlled by standard safety yellow flag and tape barriers, and Caution postings. Information on location, management, and closure are recorded as described for DOE-controlled land. Physical control by fencing, presence of personnel, or other methods is important to ensure waste control and to prevent the spread of contamination by intruders.

- Decontamination is conducted according to instructions in the site-specific health and safety plan.

- Contaminated wastes from decontamination and waste from the site are managed in accordance with the site-specific waste management plan and LANL-ER-AP-05.3.

6.3 Closure of an RMMA

Closure of the RMMA does not imply that release criteria for the area have been attained. It only means that ER waste-generating activities are completed and a RMMA is no longer required. Other radiological area controls may still be applicable.

At the conclusion of the waste-generating activities the RMMA Manager will close the RMMA by removing any physical /administrative controls and completing the ER/D&D RMMA Closure Form (Attachment 7-2 of the Final RMMA Program Plan).

UNCONTROLLED

7.0 REFERENCES

7.1 Cited References

Los Alamos National Laboratory, Field Monitoring for Surface and Volume Radioactivity Levels, LANL-ER-SOP-10.07, September 20, 1994.

Los Alamos National Laboratory, RMMA Program Plan, pp-01.0, prepared by IT Corporation, September, 1994."

Los Alamos National Laboratory, LANL Radiological Control Manual, Document LM 107-01 December 1992.

Los Alamos National Laboratory, Management of Environmental Restoration Program Wastes, LANL-ER-AP-05.3, 1994.

U.S. Department of Energy, Radiation Protection of the Public and the Environment, Order 5400.5, 1988.

7.2 Reference Material Necessary for Implementation of this SOP

Los Alamos National Laboratory, Documenting Equipment and Item Removal, Laboratory Procedure LP 107-04.0, February 1, 1994.

Los Alamos National Laboratory, Radiological Posting, Laboratory Standard LS-107-02.0, March 31, 1994.

Los Alamos National Laboratory, Releasing Equipment and Items, Health Physics Operations Standard ESH-1-07-01.0, April 18, 1994.

Los Alamos National Laboratory, Surveying for Alpha and/or Beta/Gamma Contamination, Environment, Safety and Health Procedure ESH-1-02-02.0, March 14, 1994.

Los Alamos National Laboratory, Surveying for Tritium Contamination, Environment, Safety, and Health Procedure ESH-1-02-03.0, March 14, 1994.

8.0 RECORDS

During implementation of this SOP, the forms for establishing and closing RMMAs will be completed. These forms are found in Attachments 7-1 and 7-2 of the Final RMMA Program Plan. The FTL is responsible for completing the necessary forms and sending them to the Records Processing Facility, MS M707.

9.0 ATTACHMENTS

N/A

UNCONTROLLED

LOS ALAMOS ENVIRONMENTAL RESTORATION PROGRAM
INTERIM CHANGE NOTICE

EFFECTIVE DATE : (Dist. Date) 2/14/95 ICN No. 006 Page 1 of 1

Document No. 3.01 **Rev.** 1 **Title:** **Land Surveying Procedures**

Reason for Change:

Point of clarification:

Under New Mexico Engineering and Surveying Practice Act, Licensed Professional Engineers or other surveyors with comparable qualifications and demonstrated experience and can perform design, construction, or topographic surveys including photogrammetric methods. Only licensed, Professional Land Surveyors are authorized to perform control, property, easement, or boundary surveys.

Description of Change (Specify page, paragraph, and/or section revised, and clearly write new text to be incorporated in the document).

1) Page 2, Section 2.2, in second line after "Program",

add: control, boundary, property, or easement;

end fourth line after "New Mexico", and

delete: "except when the Field Project Leader or designee is willing to document and accept responsibility for the deviation in accordance with 6.0 (100.4) of this SOP."

2) Page 5, first line, delete: "The Field Project Leader or designee will then accept any liability resulting from not using licensed surveyor."

3) Page 7, Section 8, replace first line with:

It is the responsibility of the Field Team Leader to submit all records generated by this SOP to the ER Records Processing Facility including:

UNCONTROLLED

Change Requested by:	D. McIn[illegible] (Print)	DAVID McINROY (Signature)	1/27/95 (Date)
Functional Reviewer	Dave Bradbury (Print)	[illegible] (Signature)	1/18/95 (Date)
Program Manager Approval:	[illegible] (Print)	JORG JANSEN (Signature)	1-31-95 (Date)
QPPL (QA review and approval)	Lawrence A. Souza (Print)	[illegible] (Signature)	1/31/95 (Date)

Los Alamos National Laboratory **Environmental Restoration Program** Standard Operating Procedure	No: LANL-ER-SOP-03.01 Rev: 1

Land Surveying Procedures

	(Print Name)	(Signature)	(Date)
Prepared by	DAVID K. O'FLYNN		6/27/94
Quality Review by	Patricia F. Goulding		6/23/94
Technical Review by	ERNEST T. PEIFER		6/28/94
PM Approval	JORG JANSEN		9-2-94
QPPL Approval	LAWRENCE A. SOUZA		9/1/94

Effective Date: 9/6/94

UNCONTROLLED

LAND SURVEYING PROCEDURES

Contents

1.0 PURPOSE 2

2.0 SCOPE 2
2.1 Applicability 2
2.2 Training 2

3.0 DEFINITIONS 2

4.0 BACKGROUND AND/OR CAUTIONS 2

5.0 EQUIPMENT 3

6.0 PROCEDURE 3

7.0 REFERENCES 7

8.0 RECORDS 7

9.0 ATTACHMENTS 7

UNCONTROLLED

LAND SURVEYING PROCEDURES

1.0 PURPOSE

The purpose of this Standard Operating Procedure (SOP) is to define requirements for land surveying performed for the Environmental Restoration (ER) Program. This SOP incorporates many of the same procedures contained in the Los Alamos National Laboratory (the Laboratory's) Survey Manual, as prepared by the Facilities Engineering Division (ENG). This SOP supplements and modifies those procedures.

2.0 SCOPE

2.1 Applicability

This SOP is applicable to all land surveying activities performed under the ER Program. This SOP covers all personnel who perform land surveying and mapping activities related to the ER Program.

2.2 Training

All personnel who perform land surveying must have read the Laboratory Survey Manual and this SOP. All land surveys conducted for the ER Program at the Laboratory must be performed under the direction and supervision of a professional land surveyor registered in the state of New Mexico, except when the Field Project Leader or designee is willing to document and accept responsibility for the deviation in accordance with 6.0 (100.4.C) of this SOP.

UNCONTROLLED

3.0 DEFINITIONS

Refer to the Laboratory Survey Manual and Section 6.0 of this SOP for definitions.

4.0 BACKGROUND AND/OR CAUTIONS

This SOP is intended to supplement and modify the procedures listed in the Laboratory Survey Manual with regard to various special requirements of the ER Program. The Laboratory Survey Manual serves two basic purposes: 1) to provide standard procedures and methods for conducting surveys and transmitting data, and 2) to provide a standard list of coordinates. Contact Mr. Larry Jones, P.E., of ENG-3 at (505) 667-0142 to obtain copies of the Laboratory Survey manual.

Because of the sensitive nature of the work, the requirement that sample locations be staked out accurately, and the ability to resurvey sample points based on survey data and field notes, only personnel with experience in land surveying and/or who are registered New Mexico professional land surveyors should use this procedure. Much of the information and direction contained herein requires professional judgment to properly apply.

5.0 EQUIPMENT

All equipment used to perform land surveying for the ER Program must be capable of measuring distances and angles, when in conjunction with established surveying practice, meet or exceed the requirements detailed in the "Minimum Standards for Land Surveying in New Mexico," revised February 2, 1994, or latest edition as published in the New Mexico Engineering and Surveying Practice Act. A copy of the standards is included in the Laboratory Survey Manual.

6.0 PROCEDURE

Below is a specific listing of each applicable procedure from the Laboratory Survey Manual, or portion thereof, and its applicability. The listings are supplemented by specific additions required by the ER Program. They are listed by procedure number and title.

UNCONTROLLED

100 LANL Procedures

100.1 Purpose and Scope

This is wholly applicable to land surveying under the ER Program.

100.2 Central Point

Parts of this procedure should be supplemented to reflect the unique nature of the ER Program as well as the changes in organization at ENG-3. The first change is to replace the Central Point Contact:

from Mr. Ralph Alarid, Chief of Surveys
(Mr. Alarid has retired from the Laboratory.)

to Mr. Larry Jones, P.E.
Phone: (505) 667-0142

Second, final survey information must also be transmitted to the Facility for Information Management, Analysis, and Display (FIMAD), since they produce the maps and assemble the data the ER Program utilizes. The contact and addresses for FIMAD are as follows:

Mailing Address	For UPS
Ms. Marcia Jones Los Alamos National Laboratory FIMAD Mail Stop B452 Los Alamos, NM 87545	Ms. Marcia Jones Los Alamos National Laboratory FIMAD Building SM 215, Room 259 Bikini Road Los Alamos, NM 87545 Phone: (505) 665-2807

The third party final survey information must be submitted to is

Mailing Address	For UPS
Ms. Renee Archuleta Los Alamos National Laboratory Environmental Restoration Records Processing Facility Mail Stop M707 Los Alamos, NM 87544	Ms. Renee Archuleta Los Alamos National Laboratory Environmental Restoration Records Processing Facility Trinity Drive Los Alamos, NM 87544 Phone: (505) 665-6498

UNCONTROLLED

100.3 Definition of Terms Used

This is entirely wholly applicable to land surveying under the ER Program. The following definition needs to be added:

FIMAD: Facility for Information Management Analysis and Display

100.4 Steps of Procedure in Initiating a Field Survey

A. Central Point. This should be modified to include FIMAD. FIMAD's function is to input the survey data into a database, from which maps can be made. FIMAD is also responsible for storing and retrieving survey data related to the ER Program. In addition, all records generated for the ER Program must be sent to the Environmental Restoration Records Processing Facility (RPF).

B. Performance of Field Surveys. Although the Laboratory Survey Manual does not explicitly require it, all land surveys executed under the ER Program should be performed under the direction of a New Mexico Registered Land Surveyor. This is prudent because of the sensitive nature of the work and the ability to locate sample locations in the future. The involvement of a professional surveyor will ensure that accurate state plane coordinates are calculated and proper field notes compiled. It is also important so that accurate results are ensured.

C. Quality Assurance. The Laboratory Survey Manual requires a quality assurance (QA) check by ENG-3. This ER SOP recommends that all land surveys be conducted under the responsible charge of a New Mexico Registered Land Surveyor. A QA check should also be performed by a New Mexico Registered Land Surveyor. Because such a person is licensed, he is required to work to standards established by the state of New Mexico. Additionally, the surveyor is required to perform to standards established by this SOP. QA is an inherent factor in meeting these two standards. If a New Mexico Registered Land Surveyor is not utilized, the Field Project Leader must record the deviation and the justification in the Logbook or Daily Activity

Log per LANL-ER-SOP-01.04. The Field Project Leader or designee will then accept any liability resulting from not using licensed surveyor.

D. Final Submittal. In addition to the requirements listed in the Manual, the data must also be submitted to FIMAD and the RPF. Unless the survey involves private property or boundary work, the surveys do not have to be stamped. The only cases where the survey needs to be stamped would involve projects adjacent to private property.

100.5 Survey Procedure Summary

E. Revise QA submittal as noted above.

100.6 Survey Procedure Flow Chart

Revise per Attachment A

200 LANL Survey Standards

200.1 General

This section is wholly applicable.

200.2 Horizontal and Vertical Control

This section is wholly applicable.

200.3 Monumentation

200.3.1 Temporary Control Monuments

This section is wholly applicable

200.3.2 Permanent Survey Monuments

This section is not applicable and should not be included in the SOP for ER land surveying. The ER Program should not set permanent control markers as defined in the Manual and will not need to perform such work.

200.3.3 Benchmarks

This section is not wholly applicable, but it is a source of information.

200.4 Surveys for New and Existing Utilities, Roads and Parking Areas

This section is applicable only to the extent that ER land surveys require existing features to be located. Those parts of the section that deal specifically with

UNCONTROLLED

installation of new items (roads, utilities, etc.) are not applicable, since the ER Program will not be constructing these items.

200.5 Surveys for Location of Existing Underground Utilities

This section is wholly applicable.

200.6 Construction Staking

This section is not applicable. The ER Program will not be building anything.

200.7 Soil Sampling Points

This section is applicable, although it is recommended that the horizontal accuracies be within 0.1 ft and the vertical accuracy within 1.0 ft. Once the horizontal coordinates have been established, the location should be relatively easy to reestablish if the stake or marker is dislodged or washed away. Additionally, a vertical accuracy of 0.1 ft may not be useful or cost-effective in some instances.

200.8 Building Structures/New Utilities

This section is not applicable.

200.9 Survey Information Submittal

Incorporate the changes outlined above in conjunction with those listed in the manual.

UNCONTROLLED

300 Monumentation Standards

This part of the Manual is not applicable, since the ER Program will not be installing permanent control monuments.

400 Monument Coordinates

This section is wholly applicable to the ER Program.

Miscellaneous

The "Minimum Standards for Land Surveying in New Mexico," included in the back of the Laboratory Survey Manual are wholly applicable. (Standards updated February 2, 1994, or use latest editions.)

7.0 REFERENCES

Los Alamos Facilities Engineering Division Survey Procedures Manual, Revision 1, October 30, 1992

LANL-ER-SOP-01.04, R2, Sample Control and Field Documentation

8.0 RECORDS

The records generated by this SOP and submitted to the ER RPF will include the following:

A. Coordinate listings (paper and digital format) in NAD 83 datum, with point descriptions, for all samples and control points surveyed.

B. All applicable drawings (paper and digital format) generated for each survey, if required.

C. Copies of field notes and daily logs.

9.0 ATTACHMENTS

Attachment A - Revised Survey Procedures Flow Chart

UNCONTROLLED

Los Alamos National Laboratory Environmental Restoration Program
100.6 SURVEY PROCEDURE FLOW CHART

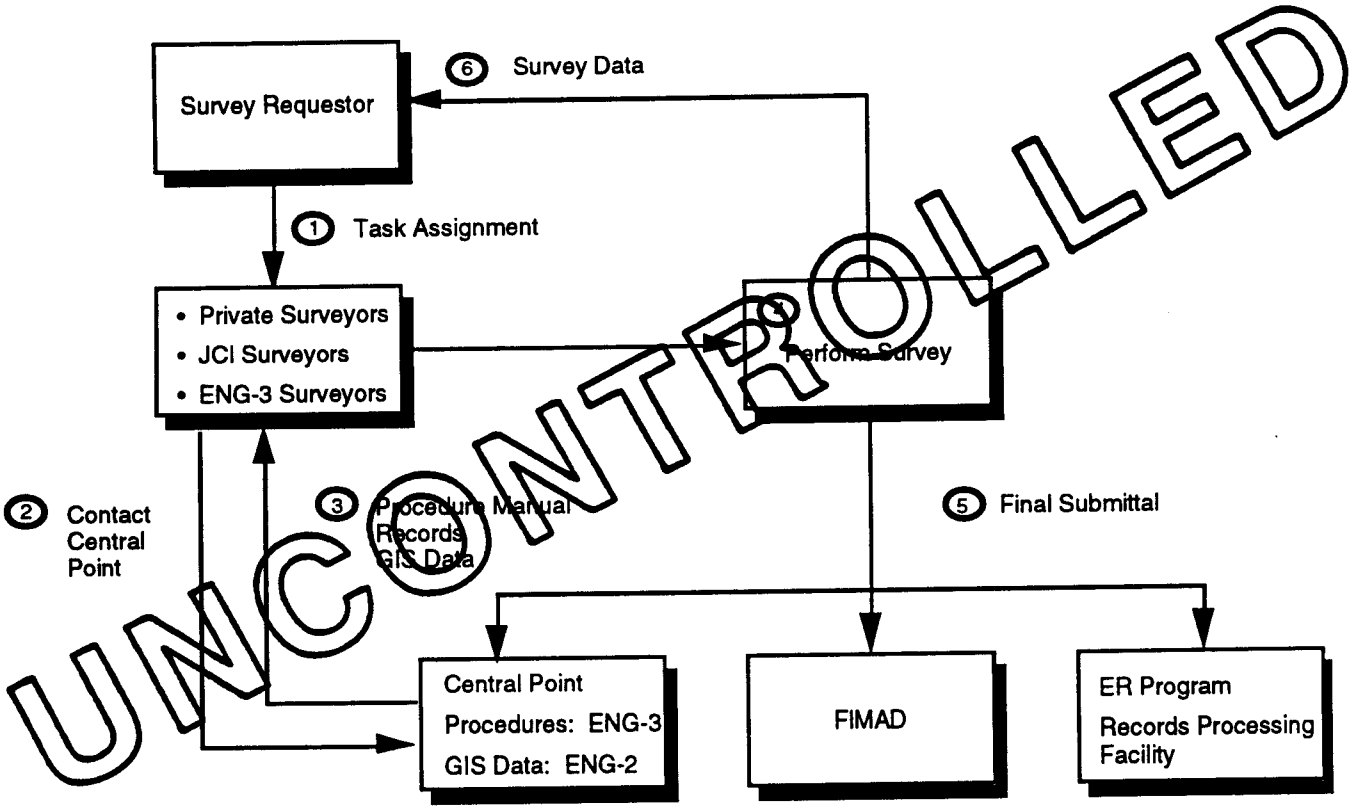

UNCONTROLLED

Los Alamos National Laboratory **Environmental Restoration Program** **Standard Operating Procedure**	No: LANL-ER-SOP-03.02 Rev: 1

GENERAL SURFACE GEOPHYSICS

Prepared by	Allen Cogbill (Print Name)	Allen H. Cogbill (Signature)	8/4/93 (Date)
Quality Review by	Larry Maassen (Print Name)	Larry Maassen (Signature)	8/18/93 (Date)
Technical Review by	John Conaway (Print Name)	J. H. Conaway (Signature)	1 Sept 9 (Date)
PM Approval	Robert W Vocke (Print Name)	Robert W Vocke (Signature)	9-8-93 (Date)
QPPL Approval	Lawrence A. Souza (Print Name)	L. A. Souza (Signature)	9/9/93 (Date)

Effective Date: 9/17/93

UNCONTROLLED

GENERAL SURFACE GEOPHYSICS

Contents

1.0 PURPOSE 3

2.0 SCOPE 3
- 2.1 Applicability 3
- 2.2 Training 3

3.0 DEFINITIONS AND ABBREVIATIONS 4
- 3.1 Definitions 4
- 3.2 Abbreviations 5

4.0 BACKGROUND AND/OR CAUTIONS 5
- 4.1 Health and Safety Concerns 5
  - 4.1.1 Machinery 6
  - 4.1.2 Electrical Devices 6
  - 4.1.3 Weather 6
  - 4.1.4 Contamination 6
  - 4.1.5 Other Hazards 6
- 4.2 Overview of Surface Geophysical Techniques 7
  - 4.2.1 Introduction 7
  - 4.2.2 Types of Surface Geophysical Methods 7
    - 4.2.2.1 Electromagnetic Conductivity 7
    - 4.2.2.2 Electrical Resistivity 8
    - 4.2.2.3 Seismic Reflection/Refraction 8
      - 4.2.2.3.1 Seismic Reflection 8
      - 4.2.2.3.2 Seismic Refraction 9
    - 4.2.2.4 Magnetic Methods 9
    - 4.2.2.5 Gravity Methods 10
    - 4.2.2.6 Ground Penetrating Radar 11
    - 4.2.2.7 Self-Potential Methods 11
  - 4.2.3 Calibration 12

5.0 EQUIPMENT 12

6.0 PROCEDURES 13
- 6.1 Surface Geophysical Technical Specifications 13
- 6.2 Before Letting the Surface Geophysical Contract 13
- 6.3 Preparing for the Surface Geophysical Survey 13
- 6.4 The Surface Geophysical Survey Operation 14
- 6.5 After the Surface Geophysical Survey 14

7.0 REFERENCES 15

UNCONTROLLED

8.0 RECORDS 15

9.0 ATTACHMENTS 16

UNCONTROLLED

GENERAL SURFACE GEOPHYSICS

1.0 PURPOSE

This set of related procedures describes the general technologies available to meet project data collection objectives by using non-intrusive surface geophysical methods. The surface geophysical methods described herein may be useful in attaining the following data collection objectives: waste characterization (physical limits in two or more dimensions), waste consistency, buried objects, likely water levels, possible shallow plume distribution, local hydrogeologic conditions, and geologic structural conditions. The seven technologies included are electromagnetic conductivity, electrical resistivity, seismic reflection and refraction, magnetometry, gravity, ground penetrating radar, and self-potential. These technologies all measure bulk earth properties through indirect means. Such technologies are not considered to be "stand alone," but are intended to be utilized in conjunction with direct sampling methods such as test pits, soil test boring, and rock coring. Typically, geophysical techniques are referred to as "surveys" due to the inferred nature of the data obtained.

UNCONTROLLED

2.0 SCOPE

2.1 Applicability

These procedures provide instruction for the general planning, selection, and implementation of geophysical surveys that may be considered during investigations of hazardous waste sites. These procedures are applicable to all personnel using geophysical field methods supporting the Environmental Restoration program. Seven methods are discussed from the standpoint of applicability to site investigation.

2.2 Training

The seven methods listed in section 1 require college level instruction in geology and geophysical methods. At least one field team member must be college-trained and have experience in the data collection objectives of surface geophysical methods. One field team member must be well versed in the use, maintenance, and calibration of the equipment to be used. The field team leader is responsible for monitoring the proper implementation of these procedures. All field personnel should document that they have read and do understand these procedures and the procedures in SOP Section 1.0, General Instructions.

Interpretation of the geophysical data acquired requires a significantly higher level of training than that required to implement the survey or to process the geophysical data. The person responsible for interpreting the geophysical data is required to have an M.S. or equivalent in geology, geophysics, geological engineering, or geological sciences.

3.0 DEFINITIONS AND ABBREVIATIONS

3.1 Definitions

A. Electromagnetic conductivity: The ability of a material to conduct electrical time-varying current. In isotropic material, the reciprocal of resistivity.

B. Electrode: A piece of metallic material that is used as an electrical contact with a nonmetal.

C. Electrical Resistivity: Observation of electric fields caused by current introduced into the ground as a means for studying earth resistivity.

D. Ground Penetrating Radar: A system in which short wavelength electromagnetic waves are transmitted, and the back scattered electromagnetic energy from reflecting objects is detected.

E. Magnetometry: The measurement of a component or element of the geomagnetic field at different locations. Such measurements are usually made either to map the broad patterns of the Earth's main field or local anomalies that exist due to variations in magnetization (either natural or man-made).

F. Magnetometer: An instrument for measuring magnetic-field strength. Such instruments typically measure either the vertical component of the field or the amplitude of the magnetic field (often termed the total intensity).

G. Seismic Refraction: The change in direction of a seismic ray upon passing into a medium with a different velocity. Also, a method of mapping geologic structure by using head waves involving energy that enters a high-velocity medium (refractor) near the critical angle and travels in the high-velocity medium nearly parallel to the refractor surface.

H. Seismic Reflection: The energy or wave from a seismic source that has been reflected (returned) from an acoustic contrast (reflector) or series of contrasts within the earth. Also, a method of imaging the subsurface by recording, usually with a multichannel recorder, reflected seismic energy generated by a surface or near-surface seismic energy source.

I. Contractor-Specific Geophysical Procedure: A contractor-supplied, specific procedure or set of procedures for making and interpreting measurements of physical properties of the earth to determine subsurface conditions, usually with an economic or geotechnical objective.

J. Instrumental Drift: A systematic change in the output of a given surface geophysical system due to causes inherent in the system, such as

UNCONTROLLED

changing equipment temperature or deterioration of an electronic component.

K. Calibration: A test or tests performed against known standards with a given surface geophysical system to verify that the system is functioning properly and to provide calibration values which allow the data from the system to be used quantitatively.

L. Survey Notes or Data: Information obtained during a surface geophysical survey that is written in a field book or recorded by an electronic or optical recorder.

M. Surface Geophysical Technical Specifications: A set of technical specifications prepared by the Operable Unit Project Leader for a particular type of geophysical survey. Such specifications define the type of geophysical survey to be employed, the precision required of the survey, the data accuracy and repeatability, the data recording format and medium, and so forth.

N. Self-potential or spontaneous potential: The measurement of naturally-occurring, potential differences between points on the earth's surface. Such differences typically arise from either conductivity variations in the earth or fluid flow within the earth.

UNCONTROLLED

3.2 Abbreviations

CSGP - Contractor-specific geophysical procedures
EM - Electromagnetic conductivity
ER - Electrical resistivity
GPR - Ground penetrating radar
OUPL - Operable unit project leader
PDCO - Project data collection objectives
QA/QC - Quality assurance/quality control
SGTS - Surface geophysical technical specifications
SP - Self-potential (sometimes called spontaneous potential)
SR - Seismic reflection/refraction
FTL - Field Team Leader

4.0 BACKGROUND AND/OR CAUTIONS

4.1 Health and Safety Concerns

Potential hazards during a surface geophysical operation are associated with machinery, electrical devices, weather, possible contact with contaminants, and other hazards. Some of these hazards are listed below; this list is not intended to be comprehensive. A Laboratory Standard Operating Procedure (SOP) or Special Work Permit (SWP) may be required when certain

instrumentation is used. Refer to the Laboratory's Environmental, Safety, and Health manual for specific requirements relevant to SOPs and SWPs.

4.1.1 Machinery

Ground penetrating radar (GPR), electromagnetic conductivity (EM), and electrical resistivity (ER) sources are somewhat mechanical; and hazards such as tipping, rotating, or moving machinery are present.

Seismic reflection/refraction (SR) sources are mechanical and have hazards such as tipping, high pressures, pulleys, etc. Occasionally, explosive sources are tried; use of such sources must adhere to an approved Laboratory Standard Operating Procedure.

4.1.2 Electrical Devices

Direct electrical hazards - such as electrical shock and burns or electrical fires from sources, electrodes, long wires - are possible, especially using ER.

Indirect hazards-such as failure of portable generators, batteries, high pressure hoses, etc. - are possible using several of the methods discussed herein.

4.1.3 Weather

High winds increase machinery and electrical hazards.

Rain increases electrical shock hazard, especially in ER.

Lightning is a potential hazard, especially where long wires are used along the ground.

Exposure (e.g., heat exhaustion or hypothermia) is a hazard in adverse weather or if work continues beyond normal working hours.

4.1.4 Contamination

All equipment used at a site known or suspected to be contaminated must be monitored for contamination. Site workers should be aware of surface geophysical operations at all times and read and understand the SOPs related to Health and Safety in the Field.

4.1.5 Other Hazards

Fuel fires

Carbon monoxide fumes

UNCONTROLLED

Personnel problems such as inadequate training, carelessness or inattention, and impairment from medication, drugs, ailments, etc.

4.2 Overview of Surface Geophysical Techniques

4.2.1 Introduction

In environmental restoration applications, surface geophysical techniques are used for the in-situ determination of physical, chemical, geological, and hydrological parameters in site characterization and waste sites. Surface geophysical measurements can be used to help solve waste cleanup problems as part of initial site characterization, during remediation, and for post-remediation monitoring.

For accurate results to be achieved with a given surface geophysical system, it is essential that the system be calibrated against accepted standards and monitored for any malfunction or significant drift of the system calibration. In addition, the data must be corrected for non-standard conditions (conditions other than those encountered in the calibration).

UNCONTROLLED

4.2.2 Types of Surface Geophysical Methods

4.2.2.1 Electromagnetic Conductivity

The EM method provides an indirect means of measuring the electrical conductivity or resistivity of subsurface soil, rock, and groundwater. Electrical conductivity is a function of the type of soil and rock, its porosity, and the fluid composition and saturation. In most cases the conductivity of the pore fluids will be responsible for most of the measurement. Accordingly, the EM method applies both to assessment of natural geohydrologic conditions and to mapping of many types of contaminant plumes. In addition, trench boundaries, buried wastes, drums, and utility lines can be located with EM techniques. The EM technology is versatile; data may be collected either continuously or on a station-by-station (grid) basis.

Note that the EM technique measures earth conductivity by inducing eddy currents into the near-surface materials. The inducing electromagnetic field usually has a frequency close to 10 kHz; commercially available instruments have depth penetrations of roughly 5 meters (the actual depth of penetration depends upon the local conductivity structure).

4.2.2.2 Electrical Resistivity

Electrical resistivity surveys provide information about the subsurface distribution of the ground resistivity. The information can be used to infer groundwater quality and lithologic and geological information. Both horizontal and vertical changes in ground resistivity can be mapped by resistivity surveys. However, in practice, resistivity surveys are mostly used to determine the vertical changes, and lateral resistivity changes are more easily mapped by electromagnetic surveys. Often, electromagnetic and resistivity surveys are used together. ER surveys are normally performed on a station-by-station basis following linear (cross-section) or grid patterns. The ER method applies to assessment of natural geohydrologic conditions and to mapping of contaminant plumes. In some conditions, trench boundaries, buried wastes, and utility lines can be located with ER techniques.

4.2.2.3 Seismic Reflection/Refraction

Seismic techniques have been useful in some instances for assessing subsurface geohydrologic conditions such as depth to bedrock; depth thickness and dip of lithologic units; horizontal and vertical extent of anomalous geologic features (folds, faults, and fractures); the approximate depth to the water table; and, in conjunction with geophysical well log data, the porosity and permeability of lithologic units. Seismic techniques have also been used to delineate the boundaries of subsurface bulk waste trenches and the depth of landfills.

Seismic methods are relatively expensive to use and have poor spatial resolution (rarely < 0.5 meters) when compared to the resolution possible using GPR. However, the useful depth of penetration for seismic methods can be quite large (hundreds of meters), and the method can often provide results when all the other methods discussed herein fail.

4.2.2.3.1 Seismic Reflection

The method of seismic reflection consists of measuring the two-way travel times of compressional waves generated by a surface source and reflected from subsurface interfaces. Depths to each reflecting interface can be inferred from reflection two-way travel times combined with layered velocity information.

Higher subsurface resolution of shallower layers is possible with shallow reflection techniques than with refraction methods (see 4.2.2.3.2). Modern multichannel

UNCONTROLLED

engineering seismographs have filtering capabilities that allow later arriving wide-angle reflections to be separated from earlier refraction arrivals.

4.2.2.3.2 Seismic Refraction

The method of seismic refraction consists of measuring the travel times of compressional waves that are generated by a surface source, critically refracted from subsurface interfaces, and received by surface receivers. First-arrival travel times of seismic energy plotted against source-to-receiver distance on a time-distance curve are characteristic of the material through which they travel. The number of line segments on the time-distance plot indicates the number of layers. The inverse slope of a line segment indicates the apparent seismic velocity of a layer.

Seismic velocities obtained from a refraction survey over an area do not always agree with those obtained from a reflection survey over the same area. The differences may be because refraction velocities are obtained from rays traveling parallel to the top of a layer, whereas reflection velocities are obtained from waves traveling perpendicular to the strata at the bottom of the layer.

The technique of seismic refraction has been used to a greater extent than seismic reflection in the subsurface characterization of hazardous waste sites.

UNCONTROLLED

4.2.2.4 Magnetic Methods

Magnetometer surveys are used to identify areas of anomalous magnetic field strength. Although natural conditions may cause anomalies, shallowly buried ferrous metal objects (for example, steel drums) exhibit strong anomalies that are rarely confused with natural sources. Generally, any strong anomaly must be considered suspicious and therefore should be examined by direct sampling methods. Magnetic studies are performed on a station-by-station (grid) basis. The data are typically presented by contouring, although maps using colors rather than contours may be used, as well.

The magnetic methods described are applicable to locating buried drums and other ferrous metal objects; locating waste pits that contain ferrous metal; locating underground utilities such as pipelines, cables, tanks, and abandoned well casings; clearing drill sites; and identifying geologic features that exhibit sufficient magnetic contrast.

Ferromagnetic metal location and depth of burial can be inferred from the shape and width of the anomaly. The location of metal using magnetometry facilitates excavation without puncturing metal containers. Underground utilities, which are traceable with magnetics, often lie within loosely filled trenches and may provide permeable pathways for groundwater flow. Magnetometry is used in clearing drilling sites to select locations that are free of drums, detectable underground utilities, and other ferrous objects.

Under certain conditions where sufficient contrast in natural magnetization between geologic units exists, magnetic methods may be useful in identifying geologic structures such as folding, faulting, buried drainage channels, bedrock topography, and igneous intrusions. In addition, if sufficient subsurface contrast exists, it may even be possible to delineate past trench or pit burial sites where nonmetallic materials were disposed.

Interferences from surface metals, fences, powerlines, and other above ground sources - which generally lie closer to the magnetometer sensor than buried targets - may mask the targets. Corrections for these interferences cannot always be done, in which cases data obtained near such interferences must be excluded. Corrections for interferences from geologic conditions and surface objects that have small magnetic moments in comparison to the target may be possible, although such corrections are rarely used.

UNCONTROLLED

4.2.2.5 Gravity Methods

Surface gravity measurements are occasionally useful for quantifying the volume of mass deficit or excess. The method is affected by mass density variations and thus can be useful for estimating the volume of a landfill or tank, if the density contrast between the landfill or tank and the surrounding medium is known or can be estimated reliably. The method is not particularly sensitive and typically requires large volumes of material to be missing (or in excess) to be useful.

To be useful for environmental applications, gravity methods require that each gravity measurement location be known precisely, especially its elevation, and that modern, highly precise instrumentation be used. Modern instrumentation is capable of reliably measuring gravity differences as small as 3 microGals; instrumentation that is incapable of such precision is usually not useful for environmental applications.

4.2.2.6 Ground Penetrating Radar

Ground penetrating radar has been demonstrated to be useful in defining landfill cover thickness and the presence of shallow (less than 3 m) burial sites. The method may be utilized on a station-by-station or continuous recording basis, but is more often used in the continuous mode.

GPR data are often used to produce a continuous subsurface profile through the use of a linear strip chart recorder, although digital recording and subsequent processing will probably supplant the older analog methods in the near future. The following is a partial list of major GPR uses related to hazardous waste site investigations.

- Delineate the locations of buried drums, tanks, cables, and pipelines.
- Define the boundary of disturbed versus original ground, such as a landfill or a trench.
- Map water tables.
- Delineate stratigraphic layers such as clay, till, or sand.
- Define natural subsurface features, such as buried stream channels, lenses, and voids (caves).

Although GPR cannot provide definitive information on subsurface conditions, the data are desirable largely because of the very high spatial resolution that is attainable.

GPR instruments are limited with regard to sensitivity, resolution, and penetration. Field experience, published references, and operators' manuals should be used when an evaluation of instrumentation versus capability is desired.

Interpretation of radar data generally becomes more complex as the contrast in electrical properties between background and target areas becomes less. Several small, closely-spaced targets may not be sensed as multiple anomalies, but as one large anomaly.

4.2.2.7 Self-Potential Methods

Self-potential methods utilize naturally-occurring differences in electrical potential between locations on the surface. Historically, such measurements have been used to prospect for metallic ore

UNCONTROLLED

bodies, for the electrical conductivity of such bodies is typically much higher than their host rocks; such conductivity variations can give rise to measurable potential differences, which are what the SP method is based upon. In most applications relevant to environmental restoration, however, the SP method is used to measure potential differences resulting from fluid flow in porous materials. Sometimes such potentials are termed *streaming potentials*. In such cases, measurements are usually made over time, rather than as a function of spatial position. As fluids pass through porous media, electrodes (typically porous pots) on the surface are used to measure the time changes in potential differences. Such measurements are then used to infer the rate and geometry of the fluid moving in the porous medium below.

Because the potential differences usually encountered in SP surveys are quite small (often less than 50 milliVolts), voltmeters or other recording devices should be designed to measure very small voltages. Additionally, accurate calibration of such equipment is essential.

4.2.3 Calibration

Accurate calibrations are necessary for the data to be used quantitatively; calibrations also play an important role in monitoring surface geophysical techniques over time. The contractor of the surface geophysical technique must include a set of written calibration procedures for all geophysical equipment involved in quantitative measurements. The surface geophysical contractor is responsible for maintaining full and complete documentation for all calibrations for all equipment and shall provide copies of such records as required by the field team leader (FTL).

Regular calibrations traceable to accepted standards are performed at specified time intervals as well as every time a surface geophysical instrument is modified or repaired. Some instrumentation requires field or job-site calibrations to be performed immediately before and after a geophysical survey.

5.0 EQUIPMENT

The list of equipment required for surface geophysical surveys varies with the contractor and the specific technique(s) being used. Refer to the surface geophysical technical specifications (SGTS) and the contractor-specific geophysical procedures (CSGP) for the required lists.

UNCONTROLLED

6.0 PROCEDURES

Operation of the surface geophysical equipment will be in accordance with applicable industry standards and regulatory requirements.

6.1 Surface Geophysical Technical Specifications

Before soliciting bids on any surface geophysical contract for an operable unit, detailed surface geophysical technical specifications must be prepared as part of the project data collection objectives (PDCO). The success of the surface geophysical technique depends to a large degree on these specifications. The SGTS must define the type of surface geophysical system; the techniques to be used; the parameters required; the data precision, accuracy, and repeatability; the sample interval, calibration schedules and requirements; data formats and media; and so forth. The SGTS will be prepared by the operable unit project leader (OUPL) and the FTL responsible for data collection objectives. The Environmental Restoration (ER) Program's principal investigator for surface geophysics should be consulted for assistance in the preparation of the SGTS.

6.2 Before Letting the Surface Geophysical Contract

Specific, detailed procedures depend on the type of surface geophysical system and the geophysical contractor being used. These contractor-specific geophysical procedures must be prepared and submitted by the prospective geophysical contractor for approval by the FTL for the PDCO before the contract is finalized. The CSGP should conform to the general procedures given in this General Surface Geophysics SOP.

6.3 Preparing for the Surface Geophysical Survey

It is the FTL's responsibility to

- ensure that approval for property access has been obtained.
- review the site project data collection objectives and health and safety plan for specific information on field activities. Verify that the surface geophysical equipment meets specifications outlined in the SGTS. Verify that the CSGPs meet the specifications outlined in the SGTS for each surface geophysical method to be applied.
- have the work site cleared of all brush and minor obstructions and have the location of utilities properly staked and identified.
- ensure that the specific surface geophysical equipment to be used has completed a regular calibration within the required time period prior to the surface geophysical operation as specified in the SGTS. Ensure that the calibration(s) met the accuracy requirements given in the SGTS. Ensure that the surface geophysical equipment has completed a regular calibration

UNCONTROLLED

subsequent to any repair or modification even if the equipment is not yet due for a routine regular calibration; ensure that the calibration was within acceptable accuracy tolerances as defined in the SGTS.

- ensure that all surface geophysical equipment has been decontaminated prior to use.
- prepare to monitor all surface geophysical equipment used on the site for contamination (Refer to the SOPs in Section 7.0 of this SOP, References, for guidance).

6.4 The Surface Geophysical Survey Operation

It is the FTL's responsibility to

- ensure that surface geophysical survey operations are carried out as specified in the CSGP.
- ensure that all surface geophysical equipment is decontaminated between survey runs.

Because each surface geophysical technique that is to be run must be field-calibrated as required in the SGTS, a field calibration is generally required both immediately before and after a surface geophysical survey is run. The FTL ensures that this process is properly carried out according to the procedures given in the CSGP and that the readings are within acceptable limits as defined in the SGTS.

6.5 After the Surface Geophysical Survey

It is the FTL's responsponsibility to

- ensure that the survey equipment documentation sheets are correct and complete and meet the specifications given in the SGTS. He must sign and date as witness.
- obtain copies of field data in hard copy form (field notes or report) and digital form (for example, magnetic tapes or diskettes), as specified in the SGTS. These field copies are an important part of the data quality record, even though reprocessed data may be submitted by the geophysical contractor at a later time or date.
- ensure that all surface geophysical equipment is accounted for, decontaminated, and ready for transport.
- ensure that the site is restored to pre-survey conditions or as otherwise specified.

UNCONTROLLED

7.0 REFERENCES

Contractor-specific surface geophysical survey procedures

LANL-ER-SOPs in Section 1.0, General Instructions

LANL-ER-SOPs in Section 2.0, Health and Safety in the Field

LANL-ER-SOPs in Section 12.0, Curatorial Management Activities

LANL-ER-AP-02.1, LANL ER Records Management Procedure

Surface Geophysical Technical Specifications

Useful reference books include the following.

Bates, R. L., and J. A. Jackson, 1980, *Glossary of Geology*, American Geological Institute, Falls Church, Virginia.

Benson, R. C., R. A. Glaccum, and M. R. Noel, 1983, *Geophysical Techniques and Sensing Buried Wastes and Waste Migration*, U. S. Environmental Protection Agency, Las Vegas, NV.

Sheriff, R. E., 1991, *Encyclopedic Dictionary of Exploration Geophysics*, Society of Exploration Geophysicists, P. O. Box 702740, Tulsa, OK 74170-2740.

U. S. Environmental Protection Agency, 1987, *Compendium of Superfund Field Operations Methods*, EPA/540/P-87/001, Washington, DC.

U. S. Environmental Protection Agency, Region IV, 1991, *Environmental Compliance Branch Standard Operating Procedures and Quality Assurance Manual*, Environmental Services Division, Athens, GA.

UNCONTROLLED

8.0 RECORDS

Field reports and copies of field data, signed by the surface geophysical contractor representative and the field team leader or other approved witness as specified in the SGTS.

Digital data on magnetic tape or as otherwise specified in the SGTS.

Completed surface geophysical quality report for each geophysical survey run, as specified in the SGTS. Completing this quality report is the responsibility of the field team leader.

Calibration records as specified in the SGTS.

The OUPL is responsible for transfer of these records to the ER Records Processing Facility in accordance with the Procedure for LANL ER Records Management (LANL-ER-AP-02.1).

9.0 ATTACHMENTS

None

UNCONTROLLED

Los Alamos National Laboratory **Environmental Restoration Program** Standard Operating Procedure	No: LANL-ER-SOP-03.04 Rev: 0

Petrography

UNCONTROLLED

	(Print Name)	(Signature)	(Date)
Preparer:	A. W. Laughlin	A. W. Laughlin	9/6/91
Quality Review by:	D.E. Broxton	D.E. Broxton	9/9/91
Technical Review by:	W.S. BALDRIDGE	W.S. Baldridge	9/10/91
QPPL Approval:	Larry Maassen	Larry Maassen	9/16/91
PM Approval:	Robert W Vocke	Robert W Vocke	9/16/91

Effective Date: 3-14-92

PETROGRAPHY

1.0 PURPOSE

The purposes of this procedure are (1) to standardize the petrographic descriptions used within mineralogy-petrology tasks through use of a set of primary reference books and (2) to assure adequate documentation of petrographic descriptions.

2.0 SCOPE

This procedure may be used for any petrographic descriptions made by standard optical methods (i.e., unaided visual observation, hand lens, binocular microscope, petrographic microscope) for the Environmental Restoration Program.

2.1 Applicability

This procedure is applicable to all researchers working on the Environmental Restoration Program who are responsible for describing rock units occurring within lands covered by the Environmental Restoration Program.

2.2 Training

Completion of at least one college-level course in petrography and a minimum of a BS in Geology or Earth Sciences are required to use this procedure. Researchers using this procedure must also document that they have read and understood this procedure and the six procedures in Section 1.0, General Instructions.

UNCONTROLLED

3.0 DEFINITIONS

There are no unique definitions in this procedure.

4.0 BACKGROUND AND/OR CAUTIONS

The principles of petrographic analysis are learned through college-level course work. The standard reference for this procedure is Williams et al. (1954). Mineral identification and description can be augmented by use of other texts such as Wahlstrom (1955) and Tomkeieff (1983).

The only significant source of uncertainty and error in petrographic description is mineral and textual misidentification. Analysts are advised to refrain from making optical mineral identifications where the minerals are too fine-grained for adequate analysis or where the topical properties are ambiguous. Where mineral identifications must be ventured without certain optical identity, the entry should be marked as "possible," "?," or otherwise queried.

Uncertainties and errors in quantitative petrographic analyses are described in the procedure, Determination of Volume Constituents in Thin Sections of Rock, SOP-03.05.

5.0 EQUIPMENT

Petrographic descriptions may be obtained by unaided visual observations, by hand lens, by binocular microscope, or by petrographic microscope. Any brand or model of lens or optical microscope may be used for petrographic analysis.

6.0 PROCEDURE

Petrographic descriptions are either descriptive or quantitative. No two analysts will generate identical descriptions. For such descriptions, the recorded information will be traceable to a specific location in the field or to a specific sample in the laboratory to allow other petrographers to review the description. Photographs and drawings, appropriately keyed to specific field locations or samples, may be used to support petrographic descriptions. Quantitative petrographic analysis includes, but is not limited to, point counting and size measurement. Point counting is described in procedure SOP-03.05. Coarse features may be measured by any standard scale, with metric units preferred; microscopic features may be measured by ocular scale. These scales are used for approximate and relative size classification only; thus calibration of the scales is not required. Examples of petrographic descriptions appropriate to this procedure can be found in the figure captions of Williams et al. (1954). The standard reference for petrographic terms will be Bates and Jackson (1980), Tomkeieff (1983), and Wahlstrom (1955). Many of the terms used for textural features of silicic volcanic rocks are described in Ross and Smith (1961) and Smith (1960).

Petrographic analyses are considered acceptable as descriptive data. Rejections of certain parts of a petrographic analysis may be made by the same analyst or by another analyst based on reanalysis of the same sample; in such a case, the cause for the rejection should be described in the reanalysis and referred back to the original analysis. Because a wide latitude is possible in descriptive parameters, such rejections should be rare. The likeliest cause of a rejection is mineral misidentification based on optical properties; where mineral identity is optically ambiguous and important to the sample description, confirmation of mineral identity should be sought through Operating the Microprobe, SOP-09.02; Operation of Siemans X-Ray Diffractometer, SOP-09.03; or Operation of Scanning Electron Microprobe, SOP-09.07.

Petrographic descriptions are recorded in ink on the attached Petrographic Description Form. Photographs may be attached as part of the description, and sketches may be used. It is advisable to mark or describe the scale of any photograph or sketch.

7.0 REFERENCES

LANL-ER-SOP-Section 1.0, Procedures, General Instructions
LANL-ER-SOP-03.05, Determination of Volume Constituents in Thin Section of Rocks.
LANL-ER-SOP-09.02, Operating the Microprobe.

UNCONTROLLED

LANL-ER-SOP-09.03, Operation of Siemens X-Ray Diffractometer.
LANL-ER-SOP-.09.07, Operating Instructions for the International Scientific Instruments Model DS-130 Scanning Electron Microscope and Tracor Northern Series 11 X-ray Analyzer.

Bates, R. L. and J. A. Jackson (editors). 1980. Glossary of Geology. American Geological Institute, Washington, D. C.

Ross, C. S., and R. L. Smith. 1961. Ash-flow tuffs: Their origin, geologic relations and identification. U.S. Geol. Survey Prof.

Smith, R. L. 1960. Zones and zonal variations in welded ash flows. U.S. Geol. Survey Prof. Paper 354-F, p. 149-159.

Tomkeieff, S. I. 1983. Dictionary of Petrology. Wiley, 680p.

Wahlstrom, E. E. 1955. Petrographic Mineralogy. Wiley, 407p.

Williams, H., F. J. Turner, and C. M. Gilbert. 1954. Petrography. W. H. Freeman and Co., San Francisco.

UNCONTROLLED

8.0 RECORDS

Petrographic descriptions are recorded on Petrographic Description Form. Maps or photographs should be marked with sample or locality numbers that can be uniquely related to a notebook entry (sample numbering requirements are described in SOP-01.04, Sample Control and Field Documentation).

9.0 ATTACHMENTS

Petrographic Description Form

PETROGRAPHIC DESCRIPTION FORM

LOS ALAMOS NATIONAL LABORATORY
ENVIRONMENTAL RESTORATION
PETROGRAPHIC DESCRIPTION FORM

Date: _____ Sheet _____ of _____

Technical Area _____ Operable Unit _____

Site Work Plan: _____

Signature: _____

AFFIX FIRST SAMPLE STICKER HERE

AFFIX LAST SAMPLE STICKER HERE

1. Hand Sample Description

   1a. Estimated Volume:

   1b. Estimated Size:

2. Microscope Study for Classification

   2a. Primary Features:

   3a. Secondary Features:

   2c. Mineralogy:

   Essential Minerals (Vol. %):

   Accessory Minerals:

   Secondary Alteration:

   2d. Special Features:

3. Stratigraphic Assignment (if known):

4. Rock Classification:

5. Comments (be sure to record Geologic Setting/Occurrence):

☐ CHECK HERE IF CONTINUED ON BACK OF THIS SHEET

ER-SOP-03.04, R0 5/91

UNCONTROLLED
EXAMPLE
CONTACT THE PROGRAM OFFICE FOR MASTER FORMS

Los Alamos National Laboratory **Environmental Restoration Program** Standard Operating Procedure	No: LANL-ER-SOP-03.05 Rev: 0

Determination of Volume Constituents In Thin Sections of Rock

UNCONTROLLED

	(Print Name)	(Signature)	(Date)
Preparer:	A.W. Laughlin	A.W. Laughlin	8/16/91
Quality Review by:	DAVID BROXTON	David Broxton	8/27/91
Technical Review by:	Bruce Gallaher	Bruce Gallaher	9/12/91
QPPL Approval:	Larry Maassen	Larry Maassen	9/20/91
PM Approval:	Robert W Vocke	Robert W Vocke	9/20/91

Effective Date: 3-16-92

DETERMINATION OF VOLUME CONSTITUENTS IN THIN SECTIONS OF ROCKS

1.0 PURPOSE

This procedure describes a petrographic modal point count method for determining the volume fractions of identifiable constituents in a slide (thin section), using a petrographic microscope.

2.0 SCOPE

2.1 Applicability

This procedure applies to modal point counting of petrographic slides of porphyritic volcanic and volcaniclastic rocks for the Environmental Restoration (ER) program.

2.2 Training

Successful completion of college-level courses in petrography and petrology are required to use this procedure. Field team members must also document that they have read and understand this procedure and the procedures in Section 1.0, General Instructions.

UNCONTROLLED

3.0 DEFINITIONS

There are no unique definitions in this procedure

4.0 BACKGROUND AND/OR CAUTIONS

This procedure for ER program rocks is based on principles and methods in standard textbooks on optical mineralogy and petrography (e.g., Williams, Turner, and Gilbert 1954; Hutchison 1974; and Kerr 1977).

The fraction of points within a rectangular grid superimposed on a two-dimensional planar section through a specimen provides an estimate for the volume fraction of an identifiable constituent (Chayes 1949; and Hutchison 1974). This technique assumes that a statistically adequate number of sample points are taken on the plane of section (Weibel 1980; Byers and Moore 1987). Although Chayes' (1949) theory and proof relating point count on a planar section to volume percent of constituents was based on a square grid of points, volume percent of constituents was based on a square grid of points, volume percentages for correlation purposes have been determined from points counted along parallel traverse lines separated as much as 10 times the distance between points along the traverse (Byers et al. 1976; Byers and Warren 1983). In this method, prior to development of point counting, a series of evenly spaced continuous line traverses were made along a rock slab or a thin section and linear intercepts were recorded for each constituent. The total linear intercept distance for each constituent along all the traverse lines was summed by a millimeter scale on a drum translating the stage

for that constituent. An electrically driven adaptation was the Hurlbut stage and console, which summed up the Rosiwal proportional intercepts of each constituent.

The point count method described herein is similar to the Rosiwal system of counting mineral (or other constituent) intercepts, insofar as the number of successive points tallied on a mineral could increase without limit and become infinitesimally close together to form a continuous line or intercept through the mineral. The Rosiwal method is based on the reasonable assumption that the lengths or percentages of the mineral (constituent) intercepts are proportional to its section area, which in turn is proportional to its volume percentage in the rock (see also discussion in Byers and Moore 1987, p. 47). Stoyan (1979) makes similar assumptions based on line segment portions of traverse lines that intersect a given constituent. Inasmuch as the point counts are relatively close together (~1.0 mm), the percentage of the total line segment representing the constituent is approximated.

UNCONTROLLED

5.0 EQUIPMENT

Any standard research petrographic microscope with an electrically automated or manual mechanical stage with mm-graduated x-y stage translation controls to move the thin section may be used. The slide is placed in the stage holder parallel to the x translation, which is either (1) electrically power-driven and is connected to a main console that has keys individually assigned to a constituent identifiable in the point count, or (2) traversed manually with intercepts in mm read off the x translation or "clicks" recording translations of ~0.1 to ~0.5 mm, depending on setting (original point counter; Chayes 1949), and the "clicks" are tallied with the other hand on a mechanical counter (e.g. Clay-Adams blood counter). The electrically driven mechanical stage moves ~0.1 to 0.5 mm per count (depending on the setting) and the console sums the points tallied for each constituent and converts to percentages. Precise calibration of the 0.1 to 0.5 translation settings of the mechanical or manual stage is not critical, inasmuch as approximate spacing of translation steps or "clicks" is adequate for calculation of percentages of constituents. The y translation of either automated or manual stage is controlled manually and determines the spacing between traverses, generally 1.0 mm, and need not be calibrated for the simple arithmetic calculation of percentages of constituents.

6.0 PROCEDURE

6.1 Orientation of Plane of Thin Section With Respect to Fabric

In the case of pumice-foliated welded tuff (flattening or foliation nearly perpendicular to gravitational force) or other rock type with horizontal fabric, the thin section should be cut close to vertical with the long dimension running perpendicular to the foliation (Hutchison 1974, p. 47, fig 3.2). This provides the longest traverse lines nearly normal to foliation. Also, in sampling nonfoliated silicic volcanic rocks, especially where the attitude (strike and dip) is unknown, the long dimension of the slide may be cut vertical for consistency. The drill core or surface outcrop should be marked with a down arrow prior to sampling. The thin section preparer should cut the long dimension (30 mm) of the slide parallel to the arrow and show the direction of the arrow on the slide. Exception: In sectioning of a

horizontal cylindrical core plug (e.g., paleomagnetic samples), the thin section is cut perpendicular to the core axis (circular section). Down is marked on the section from the down arrow marked on either end of the core plug by the original sampler.

6.2 Additional Thin Sections From Specimens

Where a sample site is critical, two or three thin sections may be cut from a single specimen of core. The purpose is to provide a larger area to count for better statistics on a critically located sample. The first section should be cut vertical and perpendicular to foliation in accordance with the standard procedure indicated above in 6.1. The second thin section should also be cut vertical and as close to perpendicular as possible to the first section (the second section would not necessarily be perpendicular to the foliation unless it were horizontal), and the third should be at an angle of 45 degrees to the other two and vertical. The third section may, under exceptional circumstances, be cut horizontally perpendicular to the other two but must carefully avoid any large pumice, which might not be representative of the ground mass.

6.3 Data to be recorded

6.3.1 Set-up

The general background for recording thin section data is given in SOP-03.04, Petrography. The procedure described herein results in quantitative petrographic descriptions (Hutchison 1974). No two petrographers will generate identical data but they should be similar (cf. Moore et al. 1989). Definitions of phenocrysts (minerals), textures, and fine grained "groundmass" will depend on the thin section being analyzed. The cut-off size for phenocrysts or microphenocrysts must be judged by the petrographer before the modal analysis is begun. For example, in devitrified rhyolitic tuffs the lower median diameter for microphenocryst (mineral) or fine textural constituent to be recorded is taken at about 0.1 mm; therefore the step-wise movement on traverse lines parallel to the long dimension of the slide (x dimension) is generally selected at ~0.1 mm for phenocryst-poor rocks. This close spacing is selected not only for phenocrysts but also for microscopic textures. Constituents that are smaller than the 0.1 mm cutoff, even though they are recognizable, are included with categories of groundmass. The distance between traverses is generally selected at 1.0 mm, giving about twenty 30-mm traverses per slide. This rectangular grid spacing of 1.0 x ~0.1 mm is generally sufficient to quantify phenocrysts that have abundances of 1% or more.

In volcanic rocks with less than 1% of critical constituents, additional traverses may be required to quantify these constituents. For volcanic rocks with macrophenocrysts and/or coarse textures greater than 0.1 mm that make up more than 1% of the rock, the point spacing along the traverse may be wider than 0.1 mm, depending on size and concentration. Other point-count spacings may be used for other rock types; the spacing should be recorded by the petrographer.

UNCONTROLLED

6.3.2 Use of Photographs

For any thin section that may be used for Operating Instructions for ISI Model DS-130 Scanning Electron Microprobe, SOP-09.07, or Operating the Microprobe, SOP-09.02, or may be essential to identify stratigraphic position, an enlarged photo of the entire section may be made before the section is point counted. This photo can then be used to record the location of features of interest, some of which may be phenocrysts for later examination by microprobe and/or SEM. Photographs may also be taken to record fields containing exemplary phenocrysts by 35-mm or Polaroid camera attached to the microscope as standard equipment. These photographs may be numbered and stored as separate records or they may be attached to the Modal Analysis Form (see Attachment A).

6.3.3 Counting

The counting procedure described below is modified to fit ER program rocks from descriptions given in a standard text by Hutchison (p. 44-61). A petrographic microscope with a Swift automated point counter is also shown (Hutchison, Figure 3.6). Magnification selected for point-counting will depend on the grain size of features being analyzed. If features less than 0.1 mm are to be quantitatively determined, then reflected light identification may be preferred (with transmitted light to aid in identification). A constituent beneath the point defined by the intersection of cross hairs within the ocular is tallied by depressing the key corresponding to that constituent on the console or tally recorder, and the stage is simultaneously advanced to the next point. This is repeated until the end of the traverse. If a ~0.1 mm point spacing is used, about 300 points will have been tallied in one traverse on a 30-mm-long slide. As an example, in modal counting of thin sections of devitrified phenocryst-poor tuff, a 10X ocular and a 10X or 20X objective, may be used on the petrographic microscope in transmitted light. The substage converger may be engaged, to enhance the color of groundmass textures. A 40X or higher objective should be available for optical interference figures (conoscopic images) as an aid for positive identification of phenocrysts (Kerr 1977, p. 108-133).

After completion of the first traverse, the stage is moved (usually 1.0 mm) on the y axis and the second traverse is begun, following the above procedure. After about 20 traverses, depending on the width of the slide, the point count is completed. The points in each constituent are read off the manual counter or off the automated console display.

In the rare event that a point should fall on the boundary of two constituents, the constituent with the most area in SE quadrant of the cross hairs will be tallied.

UNCONTROLLED

6.3.4 Visual Count of Accessory Minerals

Rare to sparse accessory minerals, mostly of average diameters less than 0.5 mm may be simply enumerated rather than point counted. Accessory minerals in rhyolites include sphene, allanite, zircon, and apatite. The first two are larger, occasionally up to 1.5 mm and may be hit during the point count. The others, however, are generally less than 0.2 mm in long dimension and are rarely hit during a traverse.

6.3.5 Calculation of Percentages

The number of points accumulated for each constituent, C_i, is divided by the total number of points in all constituents, C_T, and is expressed as the volume percent of that constituent, V_i in the thin section:

$$V_i = C_i \times 100/C_T$$

Phenocrysts are expressed as volume percentage ratios, V_p, in which the number of points accumulated for each phenocryst, P_i, is divided by the total number of phenocryst points, P_T, in the thin section:

$$V_p = P_i \times 100/P_T$$

6.3.6 Recording of Data

The following data should be recorded in the appropriate laboratory form:

(a) Total number of points and spacing.
(b) Volume % of each constituent. Individual phenocrysts may also be represented as percent of total phenocrysts.
(c) Specimen location, identification, brief thin section description, and stratigraphic assignment if possible.
(d) Petrographer and date.
(e) The maximum and minimum (cut-off) dimension of each type of phenocryst, if desired.

Any additional information and deviations should be noted on the Daily Activity Log in SOP-01.04.

6.4 Sample/Site Traceability

Sample traceability is described in SOP-01.04, Sample Control and Field Documentation. Site traceability for field petrographic descriptions will be recorded on the Modal Analysis Form; field descriptions will be referenced to appropriate map(s) or photograph(s) as necessary. Copies of maps and photographs will be maintained by the investigator using

UNCONTROLLED

them; upon task completion or departure of the investigator from the project, all records will be transferred to the ER Records Processing Facility.

6.5 Acceptance/Rejection Criteria

There are few known potential sources of error in this procedure as far as operation and functioning of equipment. There is, however, a subjective observer element, especially in counting textures where there is a size cutoff; two operators are not likely to get precisely the same results (Moore et al. 1989). If more than one operator is involved, they should check on percent of groundmass textures within 20 percent of error (e.g., 50% ± 10%) within the same thin section; if not, they should discuss differences of observation and repeat the point counts. Phenocryst (including microphenocrysts >0.1 mm) counts in a phenocryst-poor thin section (~1% phenocrysts), should check within 20 percent of error of the total phenocrysts for major constituents, such as feldspars, and within 50 percent on minor constituents, such as biotite, that constitute less than 10 percent of the total phenocrysts (<0.1% of the total rock). Mafic and accessory phenocrysts that occur at less than about 1.0% of the total phenocrysts should be tallied rather than point counted, as the chance occurrence of hitting such very minor constituents in a point count is highly variable. In volcanic rocks with greater percentages of phenocrysts correspondingly greater accuracies should be attainable.

UNCONTROLLED

7.0 REFERENCES

LANL-ER-SOPs in Section 1.0, General Instructions.
LANL-ER-SOP-03.04, Petrography.
LANL-ER-SOP-09.02, Operating the Microprobe.
LANL-ER-SOP-09.07, Operating Instructions for ISI Model DS-130 Scanning Electron Microscope and Tracor Northern Series II X-Ray Analyzer.

Byers, F. M., Jr., W. J. Carr, P. P. Orkild, W. D. Quinlivan, and K. A. Sargent. 1976. "Volcanic Suites and Related Cauldrons of Timber Mountain-Oasis Valley Caldera Complex, Southern Nevada." U. S. Geol. Survey Prof. Paper 919.

Byers, F. M., Jr., and R. G. Warren. January 1983. "Revised Volcanic Stratigraphy of Drill Hole J-13, Fortymile Wash, Nevada, Based on Petrographic Modes and Chemistry of Phenocrysts." Los Alamos National Laboratory Report LA-9652-MS.

Byers, F. M., Jr., and L. M. Moore. February 1987. "Petrographic Variation of the Topopah Spring Tuff Matrix Within and Between Cored Drill Holes, Yucca Mountain, Nevada." Los Alamos National Laboratory Report LA-10901-MS.

Chayes, F. 1949. "A Simple Point Counter for Thin Section Analysis." Am. Mineralogist, v. 34, p. 1-11.

Hutchison, C. S. 1974. Laboratory Handbook of Petrographic Techniques. John Wiley & Sons, New York.

Kerr, P. F. 1977. Optical Mineralogy, 4th. Ed., McGraw-Hill Book Co., New York.

Moore, L. M., F. M. Byers, Jr., and D. E. Broxton. June 1989. "Statistical Test of Reproducibility and Operator Variance in Thin-Section Modal Analysis of Textures and Phenocrysts in the Topopah Spring Member, Drill Hole USW VH-2, Crater Flat, Nye County, Nevada." Los Alamos National Laboratory Report, LA-11452-MS.

Stoyan, D. 1979. "On the Accuracy of Lineal Analysis." Biometrical J., V. 21, 439-449.

Weibel, E. R. 1980. Stereological Methods, v. 2: Theoretical Foundations, Academic Press.

Williams, H., Turner, F. J., and Gilbert, C. M. 1954. Petrography. W. H. Freeman & Co. San Francisco.

8.0 RECORDS

A. Completed Modal Analysis Form
B. Completed Daily Activity Log including any additional information and deviations.

9.0 ATTACHMENTS

A. Modal Analysis Form

UNCONTROLLED

MODAL ANALYSIS FORM

LOS ALAMOS NATIONAL LABORATORY
ENVIRONMENTAL RESTORATION
MODAL ANALYSIS FORM

Date: _____

Sheet _____ of _____

Technical Area _____ Operable Unit _____

Site Work Plan: _____

Signature: _____

AFFIX FIRST SAMPLE STICKER HERE

AFFIX LAST SAMPLE STICKER HERE

FINAL FIELD VALUES:

Sample Number: _____

Collector: _____

Location: _____

Rock Type: _____

POINT COUNT

Mineral	Points	%	Size Range (mm)
Total			

Comments (Record Other Textural or Alteration Information): _____

EXAMPLE
UNCONTROLLED
CONTACT THE PROGRAM OFFICE FOR MASTER FORMS

Los Alamos National Laboratory **Environmental Restoration Program** Standard Operating Procedure	No: LANL-ER-SOP-03.06 Rev: 0

Fracture Characterization

UNCONTROLLED

	(Print Name)	(Signature)	(Date)
Preparer:	Kenneth H Wohletz	[illegible]	8/26/91
Quality Review by:	David Broxton	David Broxton	8/27/91
Technical Review by:	A. W. Laughlin	A W Laughlin	8/27/91
Technical Review by:	Bruce Gallaher	Bruce Gallaher	9/12/91
QPPL Approval:	Larry Maassen	Larry Maassen	9/16/91
PM Approval:	Robert W Vocke	Robert W Vocke	9/16/91

Effective Date: 3-16-92

FRACTURE CHARACTERIZATION

1.0 PURPOSE

This procedure details the methodology to be applied for characterization of all natural rock fractures in the Bandelier Tuff. Through application of this standardized approach, field studies of the Bandelier Tuff can give statistically significant measurements of (1) linear density of rock fracture, (2) fracture width, (3) fracture strike and dip, and (4) nature of fracture filling materials.

The fracture characterization plots and data table that result from this study constitute sufficient documentation of rock fracture to locate possible fault zones, tectonic and compaction deformation amounts, density of fractures contributing to fracture permeability, and overall competency of the Bandelier Tuff. The primary intent of this standardized approach is to make fracture characterizations from various field studies compatible such that fault zones from one field area to another can be correlated.

UNCONTROLLED

2.0 SCOPE

This procedure is applicable for all fracture characterization studies of the Bandelier Tuff where fractures are consistently exposed, either along road and blade cuts, cliff exposures, mesa tops, or excavation sites.

2.1 Applicability

This procedure is applicable to all researchers working on the Environmental Restoration Program that are responsible for characterizing rock fractures occurring within boundaries covered by the Environmental Restoration Program.

2.2 Training

Completion of a college-level course in field geology and a laboratory/lecture course in structural geology is required to use this procedure. In addition to fulfilling the requirements of this procedure, familiarity with the computer data-base RS/1 or similar system is necessary. Researchers must document that they have read and understood this procedure and the seven procedures in Section 1.0, General Instructions.

3.0 DEFINITIONS

The term "fracture" refers to any natural, linear to curvilinear break in the Bandelier Tuff without regard to the origins of the break. Displacement or opening of the break may exist but is not necessary. Terms having similar connotation for this work are "joint" or "crack." A fracture along which significant displacement has occurred is a "fault." The level of significance required for this designation depends upon locality and geological structure.

4.0 BACKGROUND AND/OR CAUTIONS

Fracture analysis in volcanic tuff follows techniques described in the structural geology text by Dennis (1972). An example document that describes a fracture characterization study on the Bandelier Tuff, using this procedure is by Vaniman and Wohletz (1990).

The main caution that must be taken in this procedure to avoid error is measurement of fractures along traverses where fracture exposure is uniform. The recognition and documentation of a fracture is dependent solely upon the researcher's ability to measure its strike, dip, and opening. In many cases these measurements require projection of the fracture plane by visual alignment. The statistical methods of fracture interpretation are intended to minimize uncertainty in these measurements. Judgement is a critical aspect of field geology and is covered in the text by Compton (1962) and the procedure covering fieldwork SOP-03.09, Geologic Mapping of Bedrock Units.

5.0 EQUIPMENT

Fracture documentation and measurement requires a Polaroid camera to make prints for documenting fracture location, a tape measure, a brunton compass, a geological pick to clear debris from fracture surfaces, a hand lens to identify fracture-filling materials, and a flexible cardboard or plastic sheet that can be inserted into fractures to aid in projecting their strike and dip.

6.0 PROCEDURE

Three phases are required by this methodology: (1) photographic documentation of area or traverse along which fractures will be characterized, with construction of a photomosaic map base; (2) measurement of fractures and their plotting on the previously constructed fracture map; and (3) entering fracture data into a computer data base and their analysis by designated procedures.

6.1 Photo Documentation

Once a traverse or area has been identified for fracture characterization, noting the above caution that fractures should have uniform exposure, a photo mosaic map of the traverse is constructed using a Polaroid camera. In order to maintain a uniform scale and resolution for this photo mosaic base the distance from the camera lens to the exposure should be held within ± 10%. Generally this distance is on the order of 40 to 60 feet such that the edges of the photo will have a lateral scale within ± 10% of that of the photo's center. Successive photos should be overlapped sufficiently to maintain this scale requirement. Also the scale should provide enough visual resolution that major fractures are easily identified on the photo. Typically this scale requirement is that each photo will cover from 10 to 30 horizontal feet of fracture exposure.

UNCONTROLLED

After construction of the photomosaic, tracing paper is overlaid to make a map of outcrop features including key topographic points such as cliff tops and bottoms, prominent fractures, and geographic objects such as buildings, trees, and large sign posts. This map should be attached to the base of the photomosaic such that a one-to-one correspondence can be made between mapped and photographed features.

6.2 Fracture Measurement

Using the fracture map constructed from photomosaics, the fracture traverse is measured using a tape measure; a horizontal scale is then placed upon the map that shows the distance between mapped features. This scale will have some horizontal variability because of the map projection method and photographic error. The scale reliability should be ± 10%. Starting from one end of the fracture traverse, each fracture is sketched upon the map and designated by a number. Fracture strike and dip are measured to an accuracy of ± 1 degree with the brunton compass along with a measurement of fracture opening width (measured perpendicular to fracture surfaces). These data are recorded in a field notebook with the fracture number along with a description of any unique features of the fracture, such as nature of fracture filling materials if present, oxidation or mineralization on fracture surfaces, and cross-cutting relationships with other rock features (pumice or lithic clasts, textural features that might be used to estimate movement along the fracture).

6.3 Fracture Data Base and Analysis

The fracture data recorded in the field notebook are entered into a data base, which allows application of several statistical procedures. The RS/1 data base system is suggested for this work but other systems can be adapted. The data base consists of a table with column for each fracture listing the fracture's number designation, its horizontal location shown on the fracture map, its dip and strike, and its width. From these data several other columns are statistically calculated, including: (1) a linear fracture density calculated as a moving average by counting the number of fractures contained in a given distance interval (10 and 100 feet) centered on each fracture; (2) a cumulative fracture width over a specified interval (10 and 100 feet) centered on each fracture; and (3) relative dip of fracture from vertical where negative values indicate southerly inclinations. Because fractures in the Bandelier Tuff are generally part of conjugate sets of northwest and northeast trending systems, additional columns for the table are separately calculated for each of the three above columns for each conjugate set. The RS/1 procedures for the above calculations are archived as source and compiled codes on essxrf VAX under RS/1 directory [wohletz]@ken@ta55. The procedures are: (1) DENS -- calculates linear fracture densities for several different distance intervals; (2) DIP -- transforms dips measurements to degrees from vertical; and (3) WID -- computes cumulative fracture widths for several distance intervals.

Fracture data are then graphed on several different plots. (1) Fracture density (10 and 100 foot intervals) vs horizontal distance along the traverse; (2) Histograms or rose diagram of fracture strike; (3) Fracture strike vs horizontal distance where positive strikes represent

UNCONTROLLED

strike in degrees east of north and negative strikes are west of north. These data are smoothed using the RS/1 data smoothing option to show the trend of northeast and northwest fracture sets as well as the overall trend of all fracture strikes; (4) Fracture dips vs horizontal distance where vertical plots at zero, dips toward the northeast or northwest are positive inflections from vertical, and southerly dips are negative inflections from vertical. Again smoothing of data show average trends for fracture sets; (5) Fracture widths vs horizontal distance with smoothed trends for fracture sets; (6) Cumulative fracture widths (per 100 foot interval) vs horizontal distance with smoothed trends for fracture sets; and (7) Fracture widths greater than 10 cm versus horizontal distance.

7.0 REFERENCES

Compton, R.R. (1962) Manual of Field Geology. John Wiley & Sons, New York, 378 pp.

Dennis, J.G. (1972) Structural Geology. The Ronald Press Co. New York, 532 pp.

Vaniman, D. and Wohletz, K. (1990) Results of geological mapping/fracture studies: TA-55 Area. Los Alamos National Laboratory, Seismic Hazards Program Memo, EES1-SH90-17, 48 pp.

LANL-ER-SOPs in Section 1.0, General Instructions
LANL-ER-SOP-03.09, Geologic Mapping of Bedrock Units

8.0 RECORDS

Fracture characterization is recorded on field forms or Daily Activity Logs in SOP-01.04, on a fracture map, and in the RS/1 computer data base. Fracture maps are clearly located by specified topographic points of reference and notes are keyed to numbered fractures on the map as are tabulated fracture data.

9.0 ATTACHMENTS

None.

UNCONTROLLED

Los Alamos National Laboratory **Environmental Restoration Program** Standard Operating Procedure	No: LANL-ER-SOP-03.07 Rev: 0

Characterization of Lithologic Variations Within The Rock Outcrops Of A Volcanic Field

UNCONTROLLED

	(Print Name)	(Signature)	(Date)
Preparer:	Grant Heiken	Grant Heiken	9-3-91
Quality Review by:	David Broxton	David Broxton	9/5/91
Technical Review by:	A W Laughlin	A W Laughlin	9/5/91
QPPL Approval:	Larry Maassen	Larry Maassen	9/16/91
PM Approval:	Robert W Vocke	Robert W Vocke	9/16/91

Effective Date: 3-16-92

TABLE OF CONTENTS

1.0 PURPOSE 2
2.0 SCOPE 2
2.1 Applicability 2
2.2 Training. 2
3.0 DEFINITIONS 2
4.0 BACKGROUND AND CAUTIONS. 3
5.0 EQUIPMENT 3
6.0 PROCEDURE 3
6.1 Background 4
6.2 Approach. 5
6.3 10
7.0 REFERENCES 11
8.0 RECORDS 11
9.0 ATTACHMENTS 11

UNCONTROLLED

CHARACTERIZATION OF LITHOLOGIC VARIATIONS WITHIN THE ROCK OUTCROPS OF A VOLCANIC FIELD

UNCONTROLLED

1.0 PURPOSE

This procedure establishes the methodology for characterizing the lithologic variations within rock outcrops of a volcanic field. Field methods used to describe individual outcrops and to establish stratigraphic relationships between outcrops of volcanic rocks are very similar to those used for sedimentary rocks and are described in textbooks on field geology (e.g., Compton, 1962). Careful geological mapping of lithologic units and establishing a stratigraphic framework is a crucial foundation for all other studies within a sequence of volcanic rocks. Without this framework, sample analysis is nothing more than rock collecting. Flexibility in the approach to a comprehensive field study must be allowed in order to determine what observations are appropriate to the rock sequence being studied. For example, the approach to field descriptions and sampling would differ considerably between that used for a large basaltic lava plateau and that used to study a group of small tuff rings.

2.0 SCOPE

2.1 Applicability

This procedure applies to geologists describing outcrops of volcanic rock within and adjacent to the Los Alamos National Laboratory for the purpose of characterizing the geologic setting during the Environmental Restoration program.

2.2 Training

Because of the remarkable complexity of the spectrum of volcanic rocks making up the plateaus occupied by the Laboratory, especially the pyroclastic rocks, descriptions of outcrops require at least an M.A. or M.Sc. in Geology and five years experience with these rock types. Researchers must document that they have read and understood this procedure and the procedures in Section 1.0, General Instructions.

3.0 DEFINITIONS

N/A

4.0 BACKGROUND AND CAUTIONS

When in the field, use common sense when moving from outcrop to outcrop and caution when measuring cliff sections. The best outcrops are always in cliffs, but access can be safely gained along scree slopes, road cuts, and stream bottoms. Follow procedures established in Group EES-1 for field work, which includes the location of your field traverses, time of departure, and estimated time of return. When working on outcrops along a highway, enlist an assistant to watch the traffic.

5.0 EQUIPMENT

The field equipment used by geologists is quite often a matter of personal preference. The basic equipment includes, field notebooks with perforated pages, Daily Activity Logs, ink pens for notes and pencils for sketches, optional camera (Polaroid, 35-mm, large-format, or all of them), rock hammer and chisels, small shovel for unconsolidated samples, sample bags, Geological Society of America rock color chart, Brunton Compass, altimeter, and meter tape (for stratigraphic sections), aluminum or stainless steel markers and nails for marking sample locations, and safety glasses for use during sample collection. Chain-of-Custody/Request for Analysis forms, Sample Collection Logs, Variance Logs, Custody Seals, Unique Sample Stickers, and Sample Labels will also be used. If oriented samples are required, then use of a gas-powered rock drill will be necessary.

6.0 PROCEDURE

6.1 Background

Rock units within volcanic fields show much more lateral and vertical variation than units in most sedimentary basins. They can fill caldera depressions or deep valleys making it possible for younger volcanic rocks to be present at a lower levels than older rocks before any folding or faulting. Pyroclastic rocks are formed quickly, initially with abundant kinetic and thermal energy and can be deposited as ashfalls draping topography, surges that cross topographic highs, pyroclastic flows that follow the valleys, and even wet surges of cohesive ash that defy the laws of original horizontally when plastered onto vertical surfaces.

Facies variations within single depositional units must be considered when mapping volcanic rocks. For example, surges and pyroclastic flows can grade outward into volcanic mudflows because of cooling and condensation of steam within the flow, some distance from the source. Pyroclastic flow units can vary in the degree of welding of pyroclasts, depending upon the unit thickness, with dense rocks near vent or in the center of valley fills. For detailed descriptions of facies variations in volcanic rocks, see Fisher and Schmincke (1984) and Cas and Wright (1987).

UNCONTROLLED

TABLE 1. STRATIGRAPHY IN VOLCANIC FIELDS (Adapted from Fisher and Schmincke. 1984).

PURPOSE	FIELD OBSERVATIONS
Correlation of lavas, tuffs, and epiclastic sedimentary rocks; eruption types; unit volumes; locating buried or eroded volcanic vents.	Individual beds; bedding sets in layered sequences; grain size; component analysis of features; fabric.
Paleotopography, and paleogeology; eruption history; depositional history; "basin analysis."	Facies analysis; creating a stratigraphy; descriptions of relations at unconformities;
Magma composition and volcano evolution; tectonic setting and volcanism; regional stratigraphy.	Relations of rock sequences to tectonic framework in time and space; comparison of volcanic fields, centers, and provinces.

UNCONTROLLED

6.2 Approach

Establish a working stratigraphy based upon earlier published work and study of aerial photographs or topographic maps. Published stratigraphic studies supply useful information from nearby areas and may include radiometric dates. Compile all of this information in a notebook and on a map or photo base.

Quickly examine the whole area to locate the best exposures, especially those that show contacts between depositional units. Note these locations on maps and/or photographs and return to them later to measure stratigraphic sections. As stratigraphic data are collected, enter the information on ongoing cross-sections through the volcanic field. During the field season, some of your ideas on the stratigraphy will change and it will be necessary to revisit some outcrops several times to reevaluate your interpretations.

Measure sections at the best exposures, preferably in unfaulted areas. However, this may not always be possible. Begin by standing back and looking at the outcrop from a distance. How many layers or discrete rock units stand out? Mark them on a sketch or Polaroid photograph with their general characteristics, including thickness, texture or structure, and color. This "distance view" may be useful when unraveling variations from one detailed stratigraphic section to another.

When measuring a stratigraphic section, describe the attitude (strike and dip) of the rock units, descriptions of the rock types, and their relation to older rocks, paleosoils and any intrusive rocks. Mark the area traversed while measuring the section on a map or aerial photograph; if neither map or photo exist, prepare a pace-and compass map of the line with distances, slope angles and attitudes (strikes and

dips). Also note elevations, using an altimeter, of the base, top, and important contacts. If you are working with a team, use a tape measure;

If you are by yourself, a Jacob's staff can be used. If the stratigraphic sections are very thick, confirmation of thickness can be made by measuring elevations of contacts on a topographic map.

What will you be measuring and describing? Within the field, rock-stratigraphic units are defined solely on physical differences. Fisher and Schmincke (1984) define a formation as a "mappable bed, bedding set or sequence of beds of any thickness set apart from rock units above and below by distinctive physical criteria such as texture, color, lithologic or mineralogic characteristic, or by weathered zones or erosional unconformities; a member is a convenient subdivision of a formation." They also define the concept of an eruption unit, which is a deposit from a single eruptive pulse, eruptive phase, or an eruption. A sequence of several eruption units can be treated as a mappable unit or formation. Eruption units can refer to pyroclastic fallout deposits, pyroclast flow deposits, volcanic mudflows, lava flows, and any other deposit from a singe eruptive pulse. For detailed information on defining stratigraphic units within volcanic rocks, see Fisher and Schmincke (1984), or Cas and Wright (1987).

6.3 For each layer (pyroclastic, sedimentary, or lava), describe and measure the following characteristics:

Description of Each Rock Unit. Ideally, your descriptions should go onto graph paper taped to a large clip board. This allows you to evaluate relationships at a glance as you are measuring the stratigraphic section. However, because of rain, wind, and carrying around a bulky board, this is not the usual means of recording your observations. You will most likely record your observations and sketches in a notebook, along with thickness and attitudes, to be used later to draw a section in the comfort of your camp or office. Don't worry about using notebook space; it is easier to take copious notes at the time, along with photos and sketches than to wish you had done so later in the office.

A. What is the relation of the unit to underlying rocks? Determine if there is a sharp erosional or depositional contact, a collection of reworked clastic debris, or paleosoil. Do the deposits drape the underlying topography or are they concentrated in channels and valleys. If they are deposited within a valley, measure the size, orientation and slope of the valley floor.

B. What is the color or variation in color? Be consistent and use a color chart (Munsell System rock color charts are available from the Geological Society of America).

C. Within pyroclastic rocks and epiclastic rocks:

UNCONTROLLED

1. Grain Size

Field estimates of grain size can be made, using the Fisher (1961) classification, which is parallel with Folk's (1966) classification of clastic sediments. These estimates can be made with a scale and charts for estimating areas. Actual measurements will be made by sample sieving or thin-section studies in the laboratory, but the visual estimates are good enough for measured sections. For coarser materials, including pumice and lithic clasts, they can either be sieved in the field with coarse (>4cm) sieves or measured and described at an outcrop within a designated area outlined on the rock surface (usually around $1m^2$). These observations are especially important for a study of lithic clasts within a pyroclastic unit. Another technique for observing textural variations within an eruption unit is to measure the length of the 5 largest lithic clasts and the 5 largest pumices.

2. Pyroclast Descriptions

Most of this detailed work will be done within the laboratory, but look for pyroclast and lithic clast characteristics that can be used to uniquely identify this formation or member. These can include color, shape, percentage of phenocrysts, phenocryst types, and variety of lithic clasts. Lithic clasts include those of lag breccias, mesobreccias, and megabreccias (the two latter types are related to catatrophic collapse such as avalanches from sector collapse of a volcano and wall collapse within a caldera).

3. Bedding Sets

A sequence of pyroclastic beds can be used to identify a mappable unit in the field, when used along with other observations. For example, a specific member that you are mapping may consist of a fine-grained ash fallout bed overlain by a surge bed, two pyroclastic flow deposits, and a volcanic mudflow breccia. Thicknesses, and the degree of compaction and welding within the pyroclastic flow deposits may change, but the sequence appears to be unique and helps to correlate units.

4. Grading

Is a bed massive, normally-graded, or reversely graded?

5. Oriented Clasts

Within surge deposits and pyroclastic flows, there may be elongate clasts or accidental debris, such as fossil tree trunks, which can be used to determine flow directions. Measure the orientations of the long axes of as many elongate clasts (or debris) as you can find and average them for each field location.

6. Flow Features

Many surge deposits are characterized by dunes and antidunes. Measurement of implied current directions, description of the type of cross-bedding, and the magnitude of the cross-beds are all useful for evaluating eruption types and processes and for locating vent areas.

UNCONTROLLED

7. Degree of Induration or Welding

Is the rock welded, partly welded, or nonwelded? Has the rock been indurated or cemented by post-depositional processes, including vapor-phase alteration within pyroclastic flow deposits, weathering, or hydrothermal acidity? Is there evidence for fossil fumaroles, including pipe-like zones cemented with vapor phase minerals or vertical concentrations of small lithic clasts (segregation pipes)?

8. Sampling

For each distinct unit (not necessarily from all measured stratigraphic sections), collect a sample that is representative of that unit. If the tephra are unconsolidated and coarse-grained, use a field sieve, weigh the size fractions and collect chunks of the pumice in addition to a split of the less-than-1 mm fraction kept for laboratory sieving. If the rock is consolidated (tuff), break off a sample that you feel is representative of the unit. After describing the variety of lithic clasts, collect samples of each lithic type for thin-section study. Collect samples (if appropriate) for radiometric dating and chemical analysis. Coordinate all sampling efforts with the Sample Coordination Facility.

9. Thermal Remanent Magnetization (TRM)

Most welded tuffs have high magnetic stability and have uniform TRM directions. Polarity determinations of welded ignimbrites can be made in the field, using a portable magnetometer (Lipman, 1975).

D. Lava Flows and Domes

1. Texture

Describe the textural variations within flows or domes, including variations in vesicularity (size, shape, and orientation), phenocryst content and size, brecciation, and flow foliation or layering. Map coarsely pumiceous zones, which can rise diapirically and may be broken or folded by flow movement (Fink and Manley, 1987); variations in relief and vesicularity may show up on aerial photographs of silicic lava flows and can be used to map flow structures.

Flow layering in silicic lavas ranges from sub-µm shears, which have annealed to macroscopic bands of dense glass and slightly vesicular glass. Layering attitudes, measured vertically and over the entire lava flow, can provide information on vent location, and physical properties of the flow.

2. Type of Jointing

Most lavas are broken into blocks by thermal stresses during cooling. The open fractures or joints are often columnar, at right angles to the flow surface and base (normal to the isotherms or cooling surfaces). Fracture surfaces are striated, the striae of which is a record of incremental crack advance during stress buildup in the cooling lava (Ryan and Sammis, 1978).

UNCONTROLLED

Columnar joints can range in size from a few tens of centimeters to over a meter wide and up to 30 m long (in some thick plateau basalt flows). The columns can have as few as three or as many as seven sides; most appear to have five or six sides (Williams and McBirney, 1979). Mapping column orientations can sometimes help determine lava flows boundaries (especially useful where outcrops are poor); for example, within a valley-filling lava flow, columns in the center of the valley would be vertical but oriented at an angle along the valley walls, and perpendicular to those walls which had acted as heat sinks during cooling of the lava flow. Similar columnar jointing can also be found in dikes, plugs, and lava lakes.

Mapping the size, width, and extent of cooling joints in lava flows exposed at the surface may be of considerable use in estimating their permeability.

3. Petrology

Field identification of lava type. Use whatever petrographic classification with which you are familiar, but be consistent. Remember that the descriptions should be the best possible, but that you will probably change these descriptions once you have thin sections for petrographic analysis and chemical analyses, especially in finely-crystalline rocks.

4. Type of Lava Flow

If possible, describe the type of lava flow. Most basaltic lavas can be described with the terms "pahoehoe", "aa", and "block lava". Include a description of basal breccia and lava tubes or channels if they are visible.

5. Thermal Effects

Thermal metamorphism of rocks underlying the lava flows, which includes the oxidation of soil layers or older rocks, formation of pipe vesicles during heating of water in soil or bogs, or desiccation of clastic sedimentary rocks.

E. Thickness

Measure thickness of all mappable subdivisions (eruption unit, member, or formation) and all of its members or textural subunits. Measure distances from the base of a unit to significant textural features and boundaries.

F. Correlation of Volcanic Rock Units

The means of correctly identifying a particular eruption unit is not difficult if it is small and covers a small area, for example a small-volume rhyolite flow where it is possible to walk from one end to the other. However, even in these cases, describing the lithologic characteristics necessary for correlation may be necessary; for example, if the underlying vent or dike is drilled and a correlation is needed between dike rocks and the flow.

UNCONTROLLED

The ability to identify and correlate eruption units becomes much more important if the units are large, extensive, and within a tectonically complex area. If a pyroclastic unit (either fallout deposit or ignimbrite) is to be traced, either for the purpose of determining its volume or its utility as a stratigraphic marker across complex terrain, then correlation criteria must be established. Field work within calderas requires that pyroclastic deposits exposed around the margins be correlated with thick caldera-fill deposits; these tuffs are from the same eruption; but may have drastically different textures.

A whole branch of volcanology, *tephrochronology*, has been developed around the need for correlating volcanic ash deposits (e.g., Wilcox, 1965; Self and Sparks, 1981). Correlation of ash beds requires a unique combination of mineral phases, glass compositions, and particle shapes (e.g. shard types and pumice characteristics) for each deposit. If you are lucky enough to be working with a petrographically unique ash, then it is possible to identify it with a hand lens plus a reference sample of the known deposit. If there are several ash beds of similar composition or appearance, it may be necessary to use chemical analyses of the glass pyroclasts, including trace elements for correlation. Radiometric age dates are useful, but expensive. Bulk chemical analyses are known to be poor for correlation, because gravitational segregation of mineral phases from a glass-shard-laden eruption plume increases with distance from the source. Refractive indices (r.i's) of glass shards, at one time used for correlation, are difficult to utilize because of changes in the r.i's with alteration and hydration of the glasses from one depositional environment to another.

Correlation of ignimbrites can be difficult because of facies variations, the degree of welding, post-depositional alteration, and chemical zonation of large-volume eruption units. For example, it is difficult to quickly correlate a nonwelded ignimbrite on the outer slopes of a volcano with densely-welded, hydrothermally-altered ignimbrite from the same eruption within the thick caldera fill. Hildreth and Mahood (1986) have reviewed techniques of correlating ignimbrites and conclude that the following observations are the most reliable:

1. Careful geologic mapping of the whole unit.
2. Indicating stratigraphic position.
3. Noting thermal remnant magnetic directions within welded tuffs and high precision K-Ar ages.
4. Noting a distinctive suite or lithic clasts.
5. Noting petrographic characteristics within pumice clasts, pyroclast shapes, and unusual phenocrysts.

7.0 REFERENCES

LANL-ER-SOPs - Section 1.0, General Instructions.

UNCONTROLLED

Cas, R.A.F. and J.V. Wright. 1987. Volcanic Successions: Modern and Ancient. Allen and Unwin. London. 528 pp.

Compton, R.R. 1962. Manual of Field Geology. John Wiley & Sons, Inc. New York. 378 pp.

Fink, J.H. and C.R. Manley. 1987. Origin of Pumiceous and Glassy Textures in Rhyolite Flaws and Domes. Geol. Soc. Amer. Spec. Papers 212: pp 77-88.

Fisher, R.V. 1961. Proposed classification of volcanoclastic sediments and rocks. Geol. Soc. Am Bull., 72. pp: 409-1414.

Fisher, R.V. and H.U. Schmincke. 1984. Pyroclastic Rocks. Springer-Verlag, Berlin. 472 pp.

Folks, R.L. 1966. Petrology of Sedimentary Rocks. Hemphills. Austin. 170 pp.

Hildreth, W. and G.A. Mahood. 1986. Ring-fracture eruption of the Bishop Tuff. Geol. Soc. Amer. Bull., 97. pp 396-403.

Lipman, P.W. 1975. Evolution of the Platoro caldera complex and related volcanic rocks, southeastern San Joan Mountains, Colorado. U.S. Geol. Surv. Prof. Paper 852. 128 pp.

Ryan, M.P. and C.G. Sammis. 1978. Cyclic fracture mechanisms in cooling basalt. Geol. Soc. Amer. Bull. 89. pp 1295-1308.

Self, S. and R.S.J. Sparks. (eds). 1981. Tephra Studies. D. Reidel, Dordrecht. 481 pp.

Wilcox, R.E. 1965. Volcanic-ash chronology. In Quaternary of the United States. Princeton Univ. Press. Princeton. pp. 807-816.

Williams, H. and A.R. McBirney. 1979. Volcanology. Freeman, Cooper and Co. San Francisco. 397 pp.

UNCONTROLLED

8.0 RECORDS

Field observations will be kept in the following manner:

(1) Field notebooks.

(2) Where appropriate, large sketches will be made of outcrops with pencil and later inked in the office. This approach is particularly appropriate in most cases where a stratigraphic section is being measured.

(3) On large outcrops or along entire sections of a canyon wall the base for recording these details will be enlargements of photographs taken from the opposite canyon wall with a large-format (8" X 10" negative) camera.

(4) Photographs of field details may be taken with 35 mm or Polaroid camera. The camera should have a built-in date and time that appears on the negative, which will be recorded in the field notebook. Prints prepared for analysis or use in the field (for annotation with ink) will be at the discretion of the investigator. Proof sheets will be filed along with the negatives.

9.0 ATTACHMENTS

N/A

UNCONTROLLED

Los Alamos National Laboratory **Environmental Restoration Program** Standard Operating Procedure	No: LANL-ER-SOP-03.08 Rev: 0

Geomorphic Characterization

Prepared by	Steven Reneau (Print Name)	Steven Reneau (Signature)	3/30/93 (Date)
Quality Review by	Larry Maassen (Print Name)	Larry Maassen (Signature)	4/30/93 (Date)
Technical Review by	Jamie Gardner (Print Name)	Jamie Gardner (Signature)	1 April 1993 (Date)
PM Approval	Robert Vocke (Print Name)	Robert W Vocke (Signature)	5-7-93 (Date)
QPPL Approval	A. E. Norris (Print Name)	A. E. Norris (Signature)	May 7, 1993 (Date)

Effective Date: May 19, 1993

UNCONTROLLED

GEOMORPHIC CHARACTERIZATION

Contents

1.0 PURPOSE 2

2.0 SCOPE 2
2.1 Applicability 2
2.2 Training 2

3.0 DEFINITIONS 2

4.0 BACKGROUND AND/OR CAUTIONS 2

5.0 EQUIPMENT 2

6.0 PROCEDURE 3
6.1 Mapping Surficial Deposits, Landforms, and Drainage Channels 3
6.2 Documentation of Surficial Processes 5

7.0 REFERENCES 6

8.0 RECORDS 6

9.0 ATTACHMENTS 7

UNCONTROLLED

GEOMORPHIC CHARACTERIZATION

1.0 PURPOSE

The purpose of this procedure is to standardize the geomorphic characterizations of sites investigated in the Environmental Restoration (ER) Program, including (1) preparation of maps of surficial deposits, landforms, and drainage channels, and (2) documentation of surficial processes that pertain to the potential erosion and deposition of contaminated soil and rock material.

2.0 SCOPE

2.1 Applicability

This procedure is applicable to all researchers working on the ER Program who are responsible for characterizing geomorphic features and geomorphic processes associated with site characterization activities.

2.2 Training

To implement this procedure, the user must be a professional geomorphologist, as designated by the ER Program Earth Sciences Team Leader or Geology Principal Investigator, or must be trained by a professional geomorphologist as designated by the Earth Sciences Team Leader or Geology Principal Investigator. Researchers conducting geomorphic characterization activities must also certify that they have read and understood this procedure, as well as the six procedures in Section 1.0, General Instructions.

UNCONTROLLED

3.0 DEFINITIONS

There are no unique definitions in this procedure.

4.0 BACKGROUND AND/OR CAUTIONS

The user will follow the general instructions for field personnel as specified in Standard Operating Procedure (SOP) Section 1.0, General Instructions.

5.0 EQUIPMENT

Topographic base map, at a scale appropriate to the task and specified beforehand in consultation with the Project Leader.

Aerial photographs of the site at a scale appropriate to the task. These photographs may include both overlapping vertical photographs that allow stereoscopic examination of the ground surface and oblique photographs that allow improved examination of certain features, such as canyon walls.

6.0 PROCEDURE

The geomorphic characterization activities associated with the ER Program are focused on the identification and description of surficial deposits and landforms that provide evidence for processes that can potentially result in the exposure and/or transport of contaminants. Processes of concern in this task are primarily surficial, specifically mass wasting on canyon walls and erosion associated with surface channels. Also of concern is evidence for lateral emergence of subsurface flow along canyon walls because of its importance in understanding groundwater flow paths and potential transport of contaminants.

Geomorphic characterization involves a thorough examination of the surficial features at sites of concern and in adjacent areas, with the areal extent of study dependent on site characteristics. The areal extent will be determined in consultation with the Project Leader. The size of the area appropriate for examination may vary with the processes under consideration. For example, a search for evidence of emergence of groundwater flow may be important at greater distances from waste sites than the search for evidence for sediment transport and storage on canyon walls. The focus of the geomorphic characterization may also vary dependent on the characteristics of the site. For example, whereas documentation of sites of erosion and deposition associated with drainage channels may be critical at sites where contaminants are or have been exposed at the surface, similar documentation may not be needed at sites where wastes have been deeply buried in rock. Similarly, examination of evidence for past and potential future landsliding on canyon walls may be critical for sites adjacent to edges of mesas, but may be unnecessary where waste sites are set back a substantial distance from the canyon walls. Decisions concerning the size of the area appropriate for study and the critical processes at a site require professional judgment developed through experience with geomorphic characterization activities.

UNCONTROLLED

6.1 Mapping Surficial Deposits, Landforms, and Drainage Channels

Geomorphic features of significance to the investigation are to be located on topographic base maps. For many purposes, adequate location control can be provided by using topographic or man-made features shown on the base map, such as the course of drainage channels. If needed, more precise location control can be provided by using a tape and compass or surveying equipment such as a plane table and alidade, transit, theodolite, or total station.

Preliminary mapping of geomorphic features over a large area is most efficiently done using vertical aerial photographs that provide stereoscopic coverage. This allows rapid examination of the entire area of interest and an initial identification of areas of critical interest that require field checking. The examination of vertical aerial photographs can be supplemented by examination of oblique aerial photos, particularly of canyon walls, that allow improved resolution of detail.

Field checking of the preliminary map is required to confirm the accuracy of interpretations made on the aerial photographs, to locate features not visible on the photographs, and to conduct in depth examination of potentially critical features that provide evidence for processes that may influence the transport and deposition of contaminants. Often, the initial field checking is followed by re-examination of the entire area on the aerial photographs to adjust the preliminary mapping. The above process should be repeated, if necessary, until the geomorphic map adequately records the significant geomorphic features.

Features to be mapped may include:

- cliffs.
- bare bedrock slopes.
- slopes generally covered with a thin soil.
- slopes mantled with colluvial deposits (generally > 1.0 m thick).
- alluvial sediments along channels.
- soil-covered mesa tops.
- artificial fill and disturbed areas.
- drainage channels, distinguishing channels incised into erodible material by a separate symbol from channels not so incised.
- sites of possible or confirmed emergence of lateral groundwater flow, evidenced by observed springs; vegetation indicative of relatively moist conditions; distinct concavities on canyon walls or enlarged amphitheater-shaped drainage heads.
- features indicative of landsliding including: partially-detached blocks on or adjacent to canyon walls; partially-opened fractures near the edges of mesas; pronounced concavities or embayments along the canyon walls that are suggestive of locations of more rapid cliff retreat in the past than adjacent portions of cliffs; deposits of bouldery colluvial debris on canyon slopes or in canyon bottoms that may record large-scale slope failure in the past.

The geomorphic map shall include a legend in which all mapped features are included and described. Mapping units may include small areas with different characteristics, to be mentioned in the legend (for example, "Bare bedrock slopes: includes small, discontinuous areas of thin colluvial deposits").

UNCONTROLLED

6.2 Documentation of Surficial Processes

Evidence of the relevant surficial processes active at the sites of investigation is identified during the mapping of surficial deposits, landforms, and drainage channels. Observation sites may be recorded on aerial photographs, the topographic base map, and/or in field notebooks.

Evidence of surficial processes to be recorded may include:

- General variations in soil thickness on mesa tops, if possible, that may reflect long-term variations in the location and intensity of erosion. Relatively thick soils on gentle slopes or towards the center of mesas may reflect low erosion rates or long-term deposition of sediments, and relatively thin soils on steeper slopes and towards the edges of mesas reflect more intense surficial erosion.

- Drainages incised into alluvium or colluvium, specifying width, depth, and length of incision and nature of sediments that the channel is incised into.

- Exposure of roots of trees or shrubs, specifying depth of exposure and age of plant, if possible, as determined from tree rings; surface characteristics should also be recorded, as appropriate, including texture of surficial materials and the gradient of the ground surface.

- Differential erosion of canyon walls that may be related to variations in induration.

- Partially-detached landslide blocks, specifying position in relation to lithologic variations, and the length, width, estimated vertical extent, and apparent amount of previous movement.

- Partially-opened fractures near the edges of mesas, specifying apparent length, depth, orientation, distance from mesa edge, and relation to drainages on mesa.

- Pronounced concavities or embayments along the canyon walls that are suggestive of more rapid cliff retreat in the past than adjacent portions of cliffs or of sapping and erosion at sites of emergence of groundwater flow.

- Distinct deposits of bouldery colluvial debris that may record large-scale slope failure in the past, specifying size and apparent source.

UNCONTROLLED

- Springs, both perennial and intermittent, specifying geologic setting of spring, associated landforms such as concavities on canyon walls, and associated vegetation.

- Sites of sediment deposition and storage along streams and on slopes that pertain to transport of contaminants, specifying topographic position, estimated size of storage site, and associated erosional features such as rills or incised channels. Where appropriate, supporting information on the estimated age and history of the deposit should be included, using chronological techniques appropriate to the age range of concern and available datable materials or surfaces.

7.0 REFERENCES

LANL-ER-SOPs in Section 1.0, General Instructions
LANL-ER-AP-02.1, Procedure for Los Alamos National Laboratory ER Records Management

8.0 RECORDS

Documentation that person(s) implementing procedure are trained in geomorphic characterization. This documentation may include summary of education and experience in a curriculum vitae.

Observations and interpretations of geomorphic features and processes made in the field and during examination of aerial photographs will be recorded on maps, in field notebooks, and possibly on photographs. These observations and interpretations will be integrated into a report presenting the results of the geomorphic characterization activities, and this report will serve as the record of these activities. The report may include the following:

- a map or maps showing significant geomorphic features.

- figures illustrating important geomorphic features or relationships, such as: sketches of natural or artificial exposures; geologic cross sections made from field measurements or from topographic maps; cartoons schematically showing important features or interpretations.

- photographs of selected sites.

- tables presenting data from analyzed samples, field measurements, or other pertinent information.

These records shall be transferred to the ER Records Processing Facility in accordance with the Procedure for Los Alamos National Laboratory ER Records Management (LANL-ER-AP-02.1).

UNCONTROLLED

9.0 ATTACHMENTS

N/A

UNCONTROLLED

Los Alamos National Laboratory **Environmental Restoration Program** Standard Operating Procedure	No: LANL-ER-SOP-03.09 Rev: 0

Geologic Mapping of Bedrock Units

UNCONTROLLED

	(Print Name)	(Signature)	(Date)
Preparer:	Fraser Goff	Fraser L. Goff	20 Aug 91
Quality Review by:	DAVID BRAXTON	David Braxton	8/27/91
Technical Review by:	A.W. Laughlin	A.W. Laughlin	8/27/91
QPPL Approval:	Larry Maassen	Larry Maassen	8/30/91
PM Approval:	Robert W Vocke	Robert W Vocke	8/30/91

Effective Date: 3-16-92

GEOLOGIC MAPPING OF BEDROCK UNITS

1.0 PURPOSE

This procedure establishes requirements for the collection, plotting, recording, and interpretation of geologic data to produce a geologic map and associated cross-sections of bedrock (non-soil) units. Because many bedrock exposures in the Los Alamos region occur along tall, vertical cliffs, this procedure also establishes requirements for producing geologic maps on photo mosaics of canyon walls and for recording geologic data on measured stratigraphic sections. Finally, this procedure establishes requirements for collection of rock samples.

2.0 SCOPE

2.1 Applicability

Field geology consists of the methods used to examine and interpret structures and materials at the outcrop and field studies are the primary means of obtaining first-hand geologic knowledge. This procedure applies to all Los Alamos National Laboratory personnel and their subcontractors who will perform geologic mapping of bedrock units for regional or site-specific projects of the Environmental Restoration Program (ERP) being conducted on behalf of Los Alamos National Laboratory.

2.2 Training

Successful completion of college-level courses in stratigraphy, structural geology, field techniques, and geologic mapping or demonstrated experience in geologic mapping through publication are required to use this procedure for ERP projects. Researchers or technicians using this procedure must document that they have read and understood it, as well as the procedures in Section 1.0, General Instructions.

UNCONTROLLED

3.0 DEFINITIONS

A. Field geology: The investigation of rocks, rock units, and rock structures in their natural environment and in their natural relations to one another.

B. Bedrock: The solid rock that occurs everywhere beneath a mantle of soil.

4.0 BACKGROUND AND/OR CAUTIONS

This procedure is designed for the Environmental Restoration Program but is based on principles and methods of field geology that are discussed in textbooks on the subject (Lahee, 1941; Compton, 1962). This procedure is an adaptation of U.S. Geol. Survey Technical Procedure GP-01, R1 ("Geologic Mapping") dated 11 August 1988. Because most of Los Alamos National Laboratory and waste sites therein are located on the

most of Los Alamos National Laboratory and waste sites therein are located on the Bandelier Tuff, no researcher or technician can perform competent geologic mapping of bedrock units in this area without referring to works on pyroclastic rocks and ash-flow tuffs (ignimbrites) (e.g., Smith, 1960; Ross and Smith, 1961; Smith and Bailey, 1966; Fisher and Schmincke, 1984). Additionally, the geology and stratigraphic nomenclature of the Los Alamos region have been previously defined and usage refined (Griggs, 1964; Bailey et al., 1969; Smith et al., 1970; Gardner, et al., 1986) thus, all geologic mapping projects for the ERP must adhere to accepted terminology, nomenclature, and usage.

The object of geologic mapping includes identification of geologic features (rock units, faults, geomorphology), definition of their distribution, contact relations, and internal variations, and determination of the age and history of the features. This information provides an understanding of the tectonic and geologic processes that could affect sites and investigations of the ERP at Los Alamos National Laboratory. The information is also required to generate models of tectonism, mass wasting, and geohydrology in the Los Alamos region.

UNCONTROLLED

5.0 EQUIPMENT

Equipment required to adequately satisfy this procedure may include, but is not necessarily limited to the following:

- Topographic base maps
- Brunton compass (or equivalent)
- Landscape photographs
- Aerial photographs
- Pocket stereoscope
- Rock hammer
- Hand lens
- Field forms, or ER Field Notebooks
- Altimeter
- Binoculars
- Camera
- Sample bags
- Marking pens, pencils, small drafting implements.
- Daily Activity Log
- Chain-of-Custody/Request for Analysis forms
- Sample Collection Logs
- Variance Logs
- Custody Seals
- Unique Sample Stickers
- Sample Labels

6.0 PROCEDURE

6.1 Objective

The object of this procedure is to produce geologic maps, cross sections, and stratigraphic sections of landforms, surficial deposits (excluding soils), and all bedrock features including rocks, faults, fractures, and folds that may occur within any site or regional area of interest or investigation to the ERP. Because of the unique terrain of this region, geologic maps will be constructed on photo mosaics of cliff walls as well as on standard topographic base maps.

6.2 Methods

Geologic maps are to be constructed through annotation of observations and interpretations pertaining to the geology of the area to be mapped (field area) at their appropriate locations on a previously prepared topographic base map or on photo mosaics.

Observations pertain to geologic features or relations that were observed at a specific place within the field area. Both the nature of the observation and the specific place at which the observation was made are to be recorded at the location on the map or photo representing the actual location. For convenience, the details of the observation may be recorded in ER Field Notebooks or Field Activity Daily Log (see SOP-01.04). If so, the specific place, referred to as a field station, shall be numbered, the number recorded at the location on the map or photo representing the actual location, and the same number with the corresponding observation entered on the Daily Log or the ER Field Notebook. Interpretations shall be similarly recorded.

Interpretations are to be distinguished from observations through use of distinctive symbols on the map, and through clear written distinction in the Daily Log or ER Field Notebook.

Observations and interpretations may be made through visitation and examination (field mapping) of the actual geologic feature. Field mapping may be supplemented or aided through examination and interpretation of aerial photographs of the actual geologic features. In field mapping, observations, interpretations, and/or field stations are to be plotted on a version of the base map (field sheet) or photo carried to the field area, and subsequently replotted on a version of the base map or photo retained at the base camp, field office, or home office. If aerial photographs are employed, observations, interpretations, and field stations may be plotted directly on the aerial photographs and subsequently transferred to a field sheet, to a base map, or to a photo mosaic.

The geologic map shall be drawn on a version of the base map and photo mosaic, and provided with an accompanying explanation. The geologic map and

UNCONTROLLED

explanation shall present a synthesis of the geologic information contained in the Daily Log or ER Field Notebook notes, field sheets, other base maps, photos, and such auxiliary information from aerial photographs, sample collections, previously published maps, and other relevant sources of data as may be available. In addition, the geologic map shall present an interpretation of the likely distribution, character and age relationships of the particular geologic features of interest (e.g., rock stratigraphic units, geologic structures, surficial deposits, geomorphic features) consistent with available observational data. Finally, the geologic map, explanation, and supporting documentation and illustrative material (e.g., text and cross-sections), if used, shall distinguish through appropriate symbols or other means that which was observed from that which was interpreted.

6.2.1 Map Scale

This procedure is applicable to geologic mapping of bedrock features at all scales. Specific scales of base maps and photo mosaics are chosen at the discretion of the Principal Investigator (PI) of each site or regional investigation.

6.2.2 Base Maps

Base maps include those prepared by FIMAD or the engineering groups of Los Alamos National Laboratory (a variety of scales <1:24,000) or advance and edition copies of U.S. Geological Survey topographic quadrangle maps at 1:24,000 to 1:100,000 scales. Base maps may be made of paper or transparent plastic such as mylar. Base maps may be cut into pieces or folded for convenient transportability. Plastic overlays may be used to record field station numbers or other data. Photos used for photo mosaics of cliff walls may be of any convenient scale to adequately portray necessary geologic features. Two versions of base maps and photos used for mosaics may be employed. These are field copies for actual field work and compilation copies used in the office for integration of all field data.

6.2.3 Rock Samples of Stratigraphic Units

Hand samples should be collected from the outcrop or from artificial exposures (man-made cuts and pits) and retained in sufficient number to represent the dominant lithologies and significant variants of all mapped rock stratigraphic units. Samples of rock stratigraphic units should normally be obtained by breaking the prospective sample from the outcrop, using a hammer or hammer and chisel. If the sample is taken from material previously separated from the outcrop (e.g., float or talus) that fact should be recorded in the Daily Log or ER Field Notebooks. Samples may be bagged in plastic, cloth, or paper bags if necessary to prevent loss, damage or contamination of the sample during handling, transit, and storage.

UNCONTROLLED

Samples of friable materials (soils, uncemented aggregates) should be collected directly from the bed, stratum, or deposit they are to represent, using implements appropriate to the purpose (e.g., shovels, trowels), taking care to prevent contamination of the sample through accidental inclusion of foreign material, and bagged in plastic, cloth, or paper bags.

Processing of these samples is limited to preparation of thin-sections, polished sections, grain mounts, and measurement of physical properties (e.g., specific gravity) or other nondestructive procedures. However, portions of a sample may be removed for destructive tests (e.g., chemical analysis) provided sufficient material remains, in the judgement of the PI, to fulfill the primary purpose of the sample, as described above.
Specialized sampling for other purposes (e.g., dating), which may be necessary or desirable, is outside the scope of this procedure.

6.2.4 Photographs

Aerial photographs (vertical or oblique, color or black and white) may be used as described above to observe, interpret, and plot geologic features and field stations. If annotated, the photographs become part of the formal data base. If not annotated, the photographs are regarded as part of the informal data base, requiring no special documentation or custodial care.

Photographs of specific geologic features may be taken using hand-held cameras as part of field data collection. The field location, frame number, azimuth (approximate), and object of the photograph are to be recorded in the Daily Log or ER Field Notebooks. As soon as practicable thereafter, a print or duplicate transparency of the photograph should be correlated with the information in the Daily Log or ER Field Notebooks, the print or transparency labeled in such a way that this information can be recovered, and filed as part of the formal data base. Other prints, positives, and negatives of the same photograph may be retained by the PI as part of an informal data base, to be used for other purposes, and requiring no special documentation or custodial care.

6.2.5 Attitude of Planar and Linear Features

The attitude of planar and linear features may be measured using hand-held devices (e.g., Brunton compasses) at the discretion of the PI. The measurement may be entered directly on field sheets, aerial photographs, or on Daily Logs or ER Field Notebooks. Magnetic declination will be compensated for by adjustment of the compass to the local declination, or through adjustment of the measurement.

UNCONTROLLED

6.2.6 Field Notebooks

Field notebooks may be used if preferred over Daily Log Sheets. The ER Field Notebooks will have perforated sheets that may be removed and attached to field forms, photographs, or other pertinent record information in a record package. The sheets in the ER Field Notebooks must have printed sequential numbers, and the header information on each set of sheets must be complete. In addition the notebooks sheets must contain, as appropriate:

- Title of mapping activity;
- Description of the objective of the mapping activity;
- Identification and scale of field sheets and base map(s) used in the mapping; and
- Equipment used.

Other information may be included, such as, weather and field conditions, sample information, data collected, or diviations, if this information is not included elsewhere.

At the conclusion of the mapping, the final results and a summary of the outcome of the mapping shall be provided. This summary shall include a discussion of whether the mapping objectives, as outlined in the initial entries, were achieved. The summary shall also include a reference to a completed and published report or map; or the summary will be provided in the field notebook. The field notes shall be reviewed and signed by a Technical reviewer.

UNCONTROLLED

6.3 Assumptions Affecting the Procedure

A basic assumption is that the individuals applying this procedure are competent, well-trained geologic mappers.

6.4 Data Information

Data collected using this procedure is presented as a geologic map, with accompanying explanation and optional cross-sections, and character of rock- and/or soil-stratigraphic units, geomorphic features, faults, folds, and fractures, their age relationships, and their geologic history.

6.4.1 Quantitative/Qualitative Criteria

An acceptable general purpose geologic map should meet the following criteria:

1. The map should be on a base that meets National Map Accuracy Standards. A topographic base is essential except on small scale maps or in areas of such low relief that the absence of contours does not hinder geologic interpretation. Bedrock geology portrayed on photo mosaics of cliff faces should show obvious reference features or structures.

2. The completed map should be clearly readable and usable at publication scale. All symbols on the map should be fully explained in the marginal material, if not in common usage. The sources of geologic data should be indicated for all parts of the map. Contacts inferred from geophysical, photogeologic, or remote sensing data should be identified and explained.

3. All geologically significant units mappable at the scale selected should be shown, and geologic features should be depicted uniformly throughout the area of the map.

4. Mines, prospects, quarries, wells, trenches, test pits, and drill holes should be shown to the extent possible at the map scale.

5. Geologic interpretations should be internally consistent and plausible. Relations of normal contacts of geologic units to topography should be consistent with rock attitudes, stratigraphy, and structure shown on the map and in cross sections.

6. Structure should be adequately portrayed. Attitudes of significant structural features should be indicated wherever practical. Structure sections should be included if needed for clarity, and these should be consistent with relations depicted on the map.

7. Surficial units should be distinguished and, where possible, subdivided on the basis of age, origin, morphology and/or lithology. If the map meets all criteria but this, it should be termed as bedrock geologic map. If it meets this criterion, but does not portray the bedrock units, it should be termed a surficial geologic map. In some cases several maps may be required to provide adequate general purpose coverage of an area.

8. Faults that display mappable offset of stratigraphic or lithologic units or which display evidence of recent movement, or are of some other special significance, should be mapped and classified as to type (normal, reverse, thrust, strike-slip, etc.); and dip and direction of relative movement should be shown wherever possible.

9. The explanation should be concise and reasonably definitive, and should express the distinctive characteristics and principal variations in the map units. Map units (including surficial units) should be described in terms of lithologic character, physical properties, thickness (where possible), economic significance, geologic and/or absolute age and contact relations. Definition of map units and stratigraphic nomenclature should be consistent with current USGS standards.

UNCONTROLLED

6.5 Calibration Requirements

Calibration is not required as a part of this technical procedure.

6.6 Sample Identification

As part of the data records and documentation, all samples will be identified as follows: All samples will be labeled with a unique identifier, using indelible ink whenever possible. Samples with surfaces too rough to mark, or too porous to mark, will be placed in bags and the bags will be marked with the unique sample identifier. Sample identifiers will be recorded on field sheets, base maps, or photos as deemed appropriate by the PI. PIs shall assure that the original sample identifier is traceable to all documentation associated with the samples, and is maintained when the samples are handled by different organizations. All sampling efforts must be coordinated with the Sample Coordination Facility.

6.7 Control and Storage

Samples collected during this work shall be identified and controlled in accordance with the procedure for Sample Control and Field Documentation. (LANL-ER-SOP-01.04).

6.8 Special Treatment

Samples shall be prepared for examination or analyses according to the purpose for which they were collected. Samples are to be routinely prepared for petrographic or geochemical analyses.

UNCONTROLLED

7.0 REFERENCES

Lahee, F. H. 1941. Field Geology: McGraw-Hill, New York.

Compton, R. R. 1962. Manual of Field Geology: Wiley & Sons, New York.

Fisher, R. V. and H. U. Schmincke. 1984. Pyroclastic Rocks: Springer-Verlag, New York.

Ross, C. S. and R. L. Smith. 1961. Ash-flow Tuffs: Their Origin, Geologic Relations, and Identification: U.S. Geol. Survey, Prof. Paper 366, 81 p.

Smith, R. L. 1960. Zones and Zonal Variations in Welded Ash Flows: U.S. Geol. Survey, Prof. Paper 354-F, p. 149-159.

Smith, R. L. and R. A. Bailey. 1966. The Bandelier Tuff: A Study of Ash-flow Eruption Cycles from Zoned Magma Chambers: Bul. Volcano. v. 29, p. 83-104.

Griggs, R. L. 1964. Geology and Groundwater Resources of the Los Alamos Area, New Mexico: U. S. Geol. Survey, Water Supply Paper 1753.

Bailey, R. A., R. L. Smith, and C. S. Ross. 1969. Stratigraphic Nomenclature of Volcanic Rocks in the Jemez Mountains, New Mexico: U. S. Geol. Survey, Bull. 1274-P.

Smith, R. L., R. A. Bailey, and C. S. Ross. 1970. Geologic Map of the Jemez Mountains, New Mexico: U.S. Geol. Survey, Miscell. Geol. Invest. Map I-57.

Gardner, J. N., F. Goff, S. Garcia, and R. C. Hagan. 1986. Stratigraphic Relations and Lithologic Variations in the Jemez Volcanic Field, New Mexico: Jour. Geophys. Res., v. 91, p. 1763-1778.

LANL-ER-SOP-Section 1.0, General Instructions.

UNCONTROLLED

8.0 RECORDS

All information collected and recorded under this procedure and that is to be used in support of the Los Alamos ERP must become a part of the official record. Information needed to process each item as a record includes: title or description, subject, originator, date of the document, and whether it is an original, a revision or an addendum.

Specific items from this procedure that will constitute a record are ER Field Notebooks, in their entirely or sheets thereof, field sheets, base maps, annotated aerial photographs, samples, photographs of specific features using hand-held cameras, and logbooks.

8.1 Field

All organized documentation will be prepared as appropriate by the PI or a contributing investigator to record data from this procedure and shall include any information considered pertinent. Each page of documentation will be numbered consecutively and chronologically. Information superseded as a result of any revisions will be lined out, initialed, and dated. All documents will be signed or initialed and dated by the investigator on a daily basis when entries are made.

8.2 Review

All data collected and the applicability of methods used in this procedure will be reviewed and cosigned by a peer or supervisor of the investigator who is knowledgeable in the objectives of this procedure. This indicates that the data are acknowledged by both the investigator and the reviewer to be acceptable and meaningful data that meet appropriate quantitative and qualitative acceptance criteria. Unacceptable data shall be identified in a manner appropriate to the form of the data.

9.0 ATTACHMENTS

N/A

UNCONTROLLED

Los Alamos National Laboratory **Environmental Restoration Program** Standard Operating Procedure	No: LANL-ER-SOP-03.10 Rev: 0

Trenching and Logging

Prepared by	Steven Reneau (Print Name)	Steven Reneau (Signature)	3/30/93 (Date)
Quality Review by	Larry Maassen (Print Name)	Larry Maassen (Signature)	4/30/93 (Date)
Technical Review by	Jamie Gardner (Print Name)	Jamie L. Gardner (Signature)	1 April 1993 (Date)
PM Approval	Robert Vocke (Print Name)	Robert W. Vocke (Signature)	5-6-93 (Date)
QPPL Approval	A. E. Norris (Print Name)	A. E. Norris (Signature)	May 6, 1993 (Date)

Effective Date: May 19, 1993

UNCONTROLLED

Trenching and Logging

Table of Contents

1.0 PURPOSE 2

2.0 SCOPE 2
- 2.1 Applicability 2
- 2.2 Training 2

3.0 DEFINITIONS 2

4.0 BACKGROUND AND/OR CAUTIONS 2

5.0 EQUIPMENT 2

6.0 PROCEDURE 3
- 6.1 Trench Locations 3
- 6.2 Trench Dimensions 3
- 6.3 Trench Wall Preparation 3
- 6.4 Logging Scale 3
- 6.5 Logging Procedures 4
- 6.6 Stratigraphic and Lithologic Variations 4
- 6.7 Photography 4
- 6.8 Other Notations 4

7.0 REFERENCES 4

8.0 RECORDS 4

9.0 ATTACHMENTS 5

UNCONTROLLED

Trenching and Logging

1.0 PURPOSE

This procedure describes general methods for trenching and logging of trenches for characterization of geologic units or geologic structure.

2.0 SCOPE

2.1 Applicability

This procedure is applicable to all personnel conducting trench excavation and trench logging for the Environmental Restoration (ER) Program for the purposes of geologic characterization.

2.2 Training

The investigation team should be composed of technical specialists with backgrounds in the field of geology. In addition, all personnel using this procedure for the ER Program must certify that they have read and understand this procedure.

UNCONTROLLED

3.0 DEFINITIONS

There are no unique definitions in this procedure.

4.0 BACKGROUND AND/OR CAUTIONS

Trenches are open excavations with generally vertical sides, and precautions are required to ensure the safety of workers. Shoring is required for trenches deeper than 5 feet when the trench is excavated in material susceptible to collapse, and ladders are required to provide exits for site workers. A minimum of two people must be present at the site before entry, and all personnel entering trenches must be equipped with hard hats and steel-toed safety shoes. OSHA Publication 2226, Excavation and Trenching Operations, should be reviewed prior to start-up.

5.0 EQUIPMENT

Equipment to be used in trench activities include standard geologic and surveying tools, such as the following:

- Geologic hammer
- Pick
- Knife
- Brunton compass
- Hand lens

- Notebook
- Total station, theodolite, or transit
- Stadia rod or surveying prism

6.0 PROCEDURE

Trenching may be used to document the presence or absence of faults or other geologic structures, and to help evaluate the potential for surface rupture and the frequency and amount of such displacement. Trenches may also be used to evaluate other geologic features such as soils or stratigraphy.

Geologic features such as stratigraphy, faults, fractures, and related structures will be logged in detail. This will allow the geologic relationships and sample locations to be permanently recorded and to be available for later analysis

6.1 Trench Locations

Trench locations shall be determined on the basis of field mapping and analysis of aerial photographs. Sites will be selected based on the requirements of the project, such as the potential for providing data on fault location and fault history, stratigraphic units, or soils.

Location control at trenches shall be done using either a digital total station or hand-surveying methods. The locations will be tied to topographic maps and/or aerial photographs.

6.2 Trench Dimensions

The minimum trench dimensions sufficient to expose significant geologic materials and relationships on the trench wall are generally 5 to 12 feet deep by 3 feet wide. The actual dimensions may vary depending on site and geologic conditions and available equipment. Trenching will also vary considerably depending on topography, ease of excavation, and available equipment.

6.3 Trench Wall Preparation

The sides of the trench shall be cleaned by chipping or scraping continuously so as to expose a clean face of rock, sediment, or soil.

6.4 Logging Scale

The choice of scale will be at the discretion of the project geologist and will depend on the complexity of geologic structures revealed in the trench. The normal scale for detailed logging is 1 inch equals 1 to 2 feet. Justification for scales other than these shall be documented.

UNCONTROLLED

6.5 Logging Procedures

Logging procedures shall consist of making a vertical profile parallel to one trench wall using a natural scale, with no vertical exaggeration. Contacts between geologic units shall be drawn on the profile and units identified and described as considered appropriate by the project geologist. Characteristics and types of contacts shall be noted.

6.6 Stratigraphic and Lithologic Variations

Variations within the geologic units will be described and indicated on the trench log whenever the variation occurs.

6.7 Photography

After the trench is logged, the shoring, if used, will be removed and the trench may be photographed at the discretion of the project geologist.

6.8 Other Notations

Sample locations shall be shown in the trench log and their locations written on a sample tag showing the trench station. All sample locations should be referenced to trench stationing.

UNCONTROLLED

7.0 REFERENCES

OSHA Publication 2226, Excavation and Trenching Operations, U.S. Department of Labor

LANL-ER-AP-02.1, Procedure for LANL ER Records Management

8.0 RECORDS

The results of the trenching activities shall be presented in a report, and this report will serve as a record of these activities. The report will include the following:

- a map or maps showing trench locations,
- detailed trench logs,
- descriptions of geologic units and structures exposed in the trenches, and
- interpretation of the trench logs with respect to the project goals

Records will be transferred to the ER Records Processing Facility in accordance with the Procedure for LANL ER Records Management (LANL-ER-AP-02.1).

9.0 ATTACHMENTS

N/A

UNCONTROLLED

Los Alamos National Laboratory **Environmental Restoration Project** Standard Operating Procedure	No: LANL-ER-SOP-03.11 Rev: 0

COORDINATING AND EVALUATING GEODETIC SURVEYS

	(Print Name)	(Signature)	(Date)
Prepared by	RICHARD KOCH		9-12-94
Quality Review by	DONNA L. WILLIAMS		9/18/94
Technical Review by	DAVID BROXTON		10/3/94
PM Approval	JORG JANSEN		3-16-95
QPPL Approval	LAWRENCE A. SOUZA		2/28/95

Effective Date: 3/21/95

UNCONTROLLED

COORDINATING AND EVALUATING GEODETIC SURVEYS

Contents

2.0 SCOPE 2
2.1 Applicability 2
2.1.1 Activities 2
2.1.2 Personnel 2
2.2 Training 2

3.0 DEFINITIONS 3

4.0 BACKGROUND AND/OR CAUTIONS 3

5.0 EQUIPMENT 3

6.0 PROCEDURE 3
6.1 Health and Safety Prescreening 3
6.2 Field Team Leader Responsibilities 3
6.3 Surveyor Responsibilities 4
6.4 Preliminary Quality Assurance/Quality Control Review 4
6.5 Handling Survey Data 5
6.6 Final Quality Assurance/Quality Control Review 5

7.0 REFERENCES 6

8.0 RECORDS 6

9.0 ATTACHMENTS 6

UNCONTROLLED

COORDINATING AND EVALUATING GEODETIC SURVEYS

1.0 PURPOSE

This procedure establishes the methodology for initiating and coordinating geodetic surveys with professional surveyors and establishes the data requirements, chain of command, and quality assurance/quality control (QA/QC) procedures for geodetic survey data.

2.0 SCOPE

2.1 Applicability

2.1.1 Activities

This procedure applies to all Environmental Restoration (ER) Project activities that require geodetic surveys to determine accurate locations. Sites that may require surveying include sample locations, grid points, photographic sites, and miscellaneous measurement points.

2.1.2 Personnel

This procedure applies to all ER Project personnel and contractor personnel who are involved with coordinating and evaluating geodetic surveys. Several professional surveying companies are currently under contract to Los Alamos National Laboratory (the Laboratory) to provide surveying services; however, other accredited professional surveying companies may be used as required.

Under the New Mexico Engineering and Surveying Practice Act, licensed professional engineers or other surveyors with comparable qualifications and demonstrated experience can perform design, construction, or topographic surveys including photogrammetric methods. Only licensed professional land surveyors are authorized to perform control, property, easement, or boundary surveys. It is recommended that surveyors be certified and registered in the State of New Mexico.

2.2 Training

The field team leader (FTL), field team members, and surveyors who perform geodetic surveying for the ER Project must be familiar with the objectives of field surveying and must document that they have read and understand this procedure, LANL-ER-SOP-03.01, R0, and the other procedures in Section 1.0, "General Instructions."

UNCONTROLLED

3.0 DEFINITIONS

A. Geodetic surveying: The method used to determine the precise position and/or dimensions of a particular locality or tract of land by direct measurements and by the application of geometric and trigonometric principles.

B. Survey coordinates: Coordinates that are expressed in a Cartesian system, which includes X, Y, and Z components (east, north, and elevation, respectively).

4.0 BACKGROUND AND/OR CAUTIONS

Two survey grid coordinate systems have been identified in the Laboratory area. The 1927 North American Datum system (NAD 27) was established and used until it was supplanted by the 1983 North American Datum system (NAD 83). United States Geological Survey (USGS) Bulletin 1875-B provides the specific divergence between the two data systems.

The NAD 83 coordinate system must be used consistently for the ER Project at the Laboratory. Survey coordinates must be declared in established New Mexico state plane coordinates and elevations, which are expressed in footage measurements.

UNCONTROLLED

5.0 EQUIPMENT

N/A

6.0 PROCEDURE

All field observations, comments, and deviations from this procedure must be documented in the daily activity log in accordance with SOP-01.01, "General Instructions for Field Investigations."

6.1 Health and Safety Prescreening

At the request of the FTL, Group ESH-1, Group ESH-5, or a contractor industrial hygienist who has been approved by one of these groups prescreens for health and safety purposes the field site to be surveyed. If readings at the site are above health and safety action levels for worker safety, as determined by one of these groups, then no survey of the site should be attempted unless authorized by one of these groups.

6.2 Field Team Leader Responsibilities

The FTL or the designated field team member determines the locations and spacing requirements of sample locations, grid points, and other sites that require surveying. The FTL contacts the surveyor and conducts an on-site briefing to establish the requirements of the survey and to indicate to the surveyor the locations of sample sites and/or grid points to be surveyed. The FTL then provides to the surveyor in writing the location identification (ID) number for each point to be surveyed. The

FTL may also provide to the surveyor a sketch map of the site showing the approximate locations of the sites to be surveyed.

6.3 Surveyor Responsibilities

The surveyor surveys the sample locations, grid points, and other sites using the best available surveying practices, linking the surveyed locations to established survey control monuments. The surveyor then provides the FTL with the following information no later than one week after completing the survey.

- Two signed, certified copies of a map that shows the surveyed locations and the control points used in the survey. All points shown on the map must be identified by location ID and/or site name, site type, and elevation. The maps must contain an appropriate scale bar and a written scale factor, and must indicate the NAD coordinate system that was used.

- A certified paper copy of the survey results showing location ID; X, Y, and Z coordinates; and a description of each surveyed location and control point.

- A statement of the precision and accuracy of the survey data.

- An ASCII file on a floppy computer disk that contains the location ID; X, Y, and Z coordinates; and a description of each surveyed location and control point. The survey data should be arranged in a columnar format with appropriate labels for each column.

6.4 Preliminary Quality Assurance/Quality Control Review

The FTL conducts a preliminary QA/QC review of the map and survey data for completeness and accuracy and for the appropriate relative location of each survey point. The following components are checked.

- Verify that all control points, such as bench marks and control monuments, are within acceptable error limits and are located properly.

- Compare the locations of the surveyed points with other known ground control points, such as control monuments, buildings, structures, pipelines, and power lines.

- Verify that the surveyed points conform to the actual arrangement of the environmental points, grid points, and sample locations.

- Compare the locations and elevations of the surveyed points with other topographic data on maps such as those from the Facility for Information, Analysis, and Display (FIMAD) and the USGS.

UNCONTROLLED

If an error or omission is encountered or if any other question arises from the survey data, the FTL contacts the surveyor to obtain additional or missing information or to request that the surveyor repeat the survey or portions thereof.

6.5 Handling Survey Data

When the survey data appear acceptable, the following procedures are followed.

- The FTL provides to the data manager of the field unit (FU) the survey data and one original, certified survey map.
- The data manager incorporates the survey data into the FU database and transfer the data to FIMAD.
- FIMAD incorporates the survey data into the FIMAD database.
- The FTL requests a plot of the survey data onto a map that also shows existing structures and other ER Project sites for final graphic review and QA/QC assessment of the survey data.

6.6 Final Quality Assurance/Quality Control Review

The FTL and the data manager must review the FIMAD map and conduct a final QA/QC review of the survey data for completeness, accuracy, and suitability for ER Project purposes. The following components are checked.

- Verify that all control points, such as bench marks and control monuments, are located properly.
- Compare the locations of the surveyed points with other known ground control points, such as control monuments, buildings, structures, pipelines, and power lines.
- Verify that the surveyed points conform to the actual arrangement of the environmental points, grid points, and sample locations.
- Compare the locations and elevations of the surveyed points with other topographic data on the FIMAD map.

If the survey data are complete and accurate, no further action is required. If an error or omission is encountered, the FTL contacts the surveyor to obtain additional or missing information or to request that the surveyor repeat the survey or portions thereof, and the QA/QC procedure described in Sections 6.4 through 6.6 is repeated.

See Attachment A for a flow diagram that outlines the procedure for coordinating and evaluating geodetic surveys.

UNCONTROLLED

7.0 REFERENCES

The following procedures are directly associated with this procedure and must be reviewed before field operations:

LANL-ER-SOPs in Section 1.0, General Instructions

LANL-ER-SOP-1.01, General Instructions for Field Investigations

LANL-ER-SOP-3.01, R1, Land Surveying Procedures

"North American Datum of 1983, map data conversion tables; United States west of 96° West longitude (including Hawaii)," US Geological Survey Bulletin 1875-B, Washington, DC, 1989, pp. B1–B431.

8.0 RECORDS

The FTL is responsible for ensuring that completed daily activity logs, which include any additional information or deviations and the justification for the deviations are sent to the ER Project Records Processing Facility in accordance with LANL-ER-AP-02.01.

9.0 ATTACHMENTS

Attachment A – Flow Diagram for Coordinating and Evaluating Geodetic Surveys

UNCONTROLLED

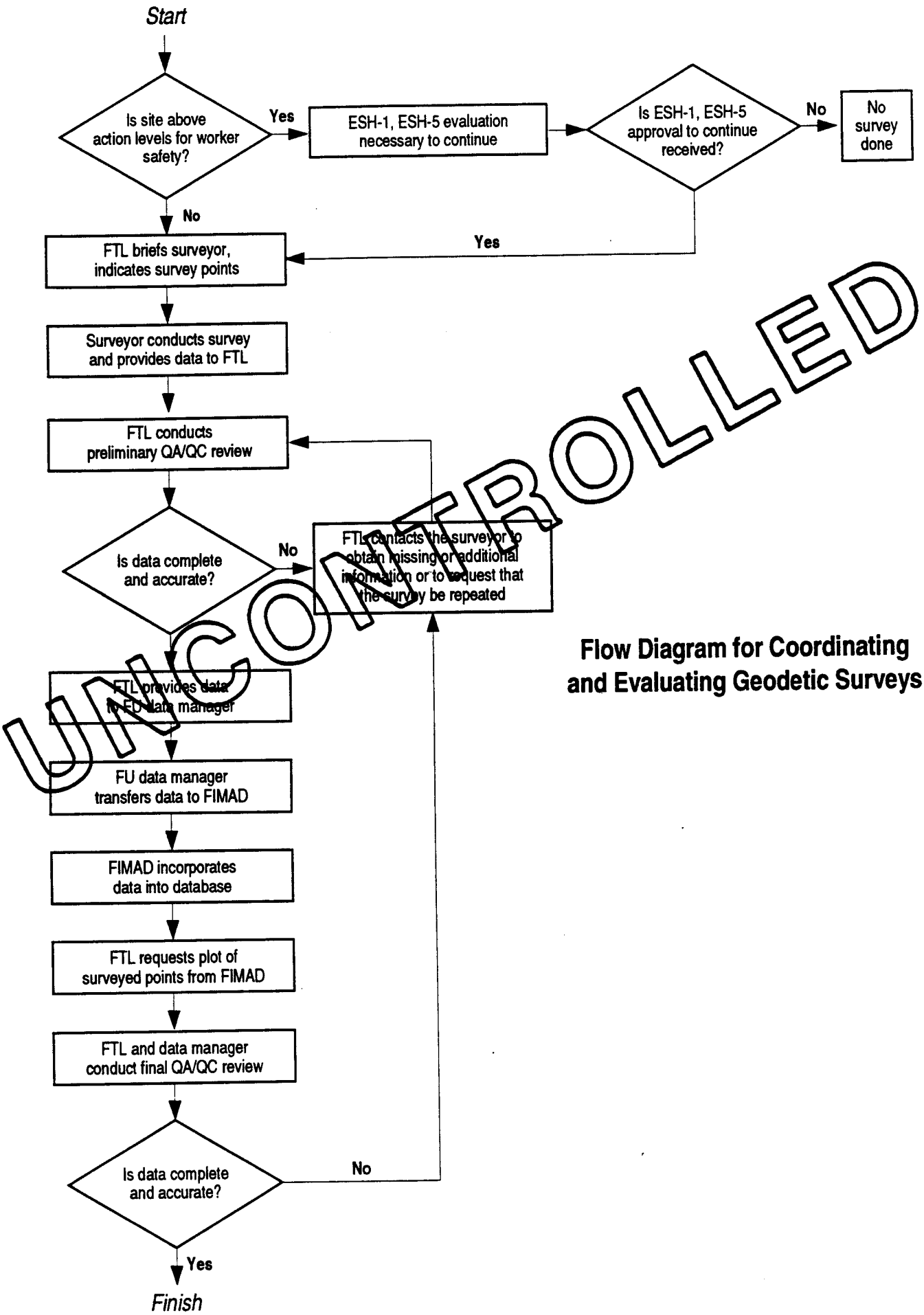

Flow Diagram for Coordinating and Evaluating Geodetic Surveys

UNCONTROLLED

Los Alamos National Laboratory **Environmental Restoration Program** Standard Operating Procedure	No: LANL-ER-SOP-03.12 Rev: 0

FIELD AND LABORATORY NOTEBOOK DOCUMENTATION FOR ENVIRONMENTAL RESTORATION EARTH SCIENCE STUDIES

UNCONTROLLED

Prepared by	Gabriela M. Gainer (Print Name)	(Signature)	9/13/93 (Date)
Quality Review by	David E. Broxton (Print Name)	(Signature)	9/13/93 (Date)
Technical Review by	Steven L. Reneau (Print Name)	(Signature)	9/13/93 (Date)
PM Approval	Robert Vocke (Print Name)	(Signature)	11/3/93 (Date)
QPPL Approval	Larry Souza (Print Name)	(Signature)	11/3/93 (Date)

Effective Date: 11/17/93

FIELD AND LABORATORY NOTEBOOK DOCUMENTATION FOR ER EARTH SCIENCE STUDIES

Contents

1.0 PURPOSE 1

2.0 SCOPE 1
- 2.1 Applicability 1
- 2.2 Training 1

3.0 DEFINITIONS 1
- 3.1 Investigator 1
- 3.2 Environmental Sample 1
- 3.3 Earth Science Sample 2
- 3.4 Notebook 2

4.0 BACKGROUND AND/OR CAUTIONS 2

5.0 EQUIPMENT 2

6.0 PROCEDURE 2
- 6.1 Type of Notebooks 2
  - 6.1.1 Bound Notebooks 3
  - 6.1.2 Electronic Notebooks 3
  - 6.1.3 Loose-Leaf Notebooks 3
- 6.2 General Notebook Requirements 3
  - 6.2.1 Starting a Notebook 3
  - 6.2.2 Requirements for Notebook Entries 4
  - 6.2.3 Attachments to Notebooks 4
- 6.3 Content of Notebook Entries 5
  - 6.3.1 Entries that Document Field or Laboratory Activities 5
  - 6.3.2 Entries that Document Tabulated Data and Sample Tracking 6
  - 6.3.3 Entries that Document Activities Prescribed by Los Alamos ER Procedures 7
- 6.4 Review of Notebooks 7

7.0 REFERENCES 9

8.0 RECORDS 9

9.0 ATTACHMENTS 9

UNCONTROLLED

FIELD AND LABORATORY NOTEBOOK DOCUMENTATION FOR ENVIRONMENTAL RESTORATION EARTH SCIENCE STUDIES

1.0 PURPOSE

This procedure establishes the methods used to document earth science field or laboratory investigations and the methods to track the origin, history, and disposition of earth science samples used for the Los Alamos National Laboratory (Laboratory) Environmental Restoration (ER) Program.

2.0 SCOPE

2.1 Applicability

This procedure applies to the documentation of field and laboratory activities conducted for earth science studies and for site-specific geologic and geohydrologic studies. This procedure covers the documentation of the collection, description, processing, and analysis of earth science samples and information in the field. This procedure applies to personnel conducting ER investigations for which the principal method of activity documentation is through notebook entries. Investigators who document their field or laboratory studies in notebooks are responsible for the proper implementation of this procedure.

The documentation for the collection of environmental samples, which are used primarily for laboratory analysis to determine contaminant nature, concentration, and/or extent, is not applicable to this procedure.

2.2 Training

Notebook authors and reviewers who conduct the actions described in Section 6.0 are required to be trained to this procedure. Training is accomplished by reading this procedure and documenting the training on the Environmental Restoration Standard Operating Procedure (SOP) Training Documentation Check List form.

3.0 DEFINITIONS

3.1 Investigator

For the purpose of this procedure an investigator is the user (author) of the notebook.

3.2 Environmental Sample

An environmental sample is one whose properties are studied to gain information about contaminant nature, concentration, and/or extent. Examples

UNCONTROLLED

of environmental samples include cores, cuttings, hand samples, soils, and fluid. These samples are submitted to the laboratory for contaminant analysis and are used to determine the course of action for a Potential Release Site (PRS). These samples require documentation per LANL-ER-SOP-01.04, Sample Control and Field Documentation.

3.3 Earth Science Sample

An earth science sample is one whose properties are studied to gain information about the geology, hydrology, geochemistry, geophysics, and/or physical characteristics of a site. Examples of earth science samples may include cores, cuttings, hand samples, mined muck, soils, soil-affecting plants, and fluid.

3.4 Notebook

Notebooks are used to document investigations. A notebook may be used for a single purpose [e.g., to document work done for an operable unit (OU) or task] or by a single investigator involved in a series of related tasks. There are three types of notebooks: bound, loose-leaf, and electronic. Bound and electronic notebooks are generally used to provide a detailed, chronological description of the various activities performed during investigations or to document miscellaneous activities (e.g., ideas, observations, and field trips). Loose-leaf notebooks are generally used to record activities prescribed by Los Alamos ER field or laboratory procedures (SOPs) or to record tabulated data (e.g., sample tracking [sample tracking log], numerical data, photographs, and other technical data).

UNCONTROLLED

4.0 BACKGROUND AND/OR CAUTIONS

This procedure *cannot* be used to document activities related to the collection of environmental samples, which will be used to determine the course of action for a PRS. Those samples require documentation per LANL-ER-SOP-01.04, Sample Control and Field Documentation.

5.0 EQUIPMENT

N/A

6.0 PROCEDURE

6.1 Type of Notebooks

Bound, electronic, and/or loose-leaf notebooks can be used to document investigations or geologic sample gathering information.

6.1.1 Bound Notebooks

Bound books with blank, numbered pages are generally used for documenting field investigations, mapping, or laboratory work. They are used to record a detailed, chronological description of the various activities performed during investigations or to document miscellaneous information or activities (e.g., ideas, observations, and field trips).

6.1.2 Electronic Notebooks

Electronic media may be used as a tool to document field or laboratory activities or to enter tabulated data; however, the electronic copy of the file is not the record. A hard copy of the notebook entries becomes the record and is maintained in a binder or folder. Entries are printed out each day (if there is an entry). Each page must contain a page number, file name, date, and signature of the investigator who made the entries. The print-out pages are treated as a loose-leaf notebook, and the requirements for this type of notebook must be followed.

6.1.3 Loose-Leaf Notebooks

Loose-leaf notebooks may be used for documenting field investigations, laboratory work, collecting attachments, or as the means for maintaining hard copies from electronic media entries. If loose-leaf notebooks are to be used, the pages are consecutively numbered and kept in an appropriate binder or folder. Each page is signed and dated by the investigator. Loose-leaf pages may also be numbered consecutively in a subdivided section, providing a logical system is used (e.g., pages A1, A2, & A3 in Section A). A table of contents is included at the beginning of the notebook, and provides the current page count for the notebook or for each section (as applicable). This table of contents should be updated weekly (if entries were made).

UNCONTROLLED

6.2 General Notebook Requirements

The following requirements apply to all notebooks. Additional requirements for specific types of entries are detailed in Section 6.3.

6.2.1 Starting a Notebook

Enter on the first page of the notebook the following items:

- investigator's name;
- title of activity;
- OU for which work is being done, if appropriate; and
- name of Principal Investigator (PI) or Project Leader (PL) responsible for the activity, if appropriate.

Investigators may create a table of contents or index for listing the major sections within the notebook.

6.2.2 Requirements for Notebook Entries

All entries in notebooks must meet the following requirements:

6.2.2.1 Make text and data entries in ink (not pencil), or use electronic media to record entries. Field sketches may be made in pencil and then inked over.

6.2.2.2 Enter the date at the beginning of the entry.

6.2.2.3 Record entries in sufficient detail so that another similarly qualified individual could repeat the work described and achieve comparable results without recourse to the original investigator.

6.2.2.4 When recording entries by hand, in a bound notebook, sign the entry after completing a task or workday (whichever is shortest). Two or more individuals may record entries in the same notebook, providing they each sign their own entry. When using electronic media, print out a copy of the entry when the task or workday is finished (whichever is shortest) and date and sign each page of the hard copy. When using loose-leaf notebooks, sign and date each page.

6.2.2.5 Fill out each page of the notebook completely, unless you need to reserve space for future entries (for example when entering tabulated information). Clearly label spaces for future entries and record these entries before you complete the notebook. After completing all entries, void all blank spaces with a diagonal line.

6.2.2.6 Correct entries by crossing the incorrect entry with a line so that the original entry is readable and by entering the correct information. If the correction is done at a later date, initial and date the correction.

6.2.3 Attachments to Notebooks

All attachments (e.g., maps, charts, graphs, and computer printouts) are referenced in the applicable notebook, or they can be included within the loose-leaf notebook or binder that corresponds to the work for that attachment. Loose-leaf attachments for bound notebooks are maintained in a uniquely identified binder or folder and the pages are consecutively numbered.

UNCONTROLLED

6.3 Content of Notebook Entries

The content of notebook entries is divided into three categories: (1) entries that document field and/or laboratory activities such as field observations, mapping, sample collection, petrographic descriptions, data reduction, and data analysis, (2) entries that document tabulated data and sample tracking such as laboratory data collection, and (3) entries that document activities prescribed by Los Alamos ER procedures.

6.3.1 Entries that Document Field or Laboratory Activities

Notebooks are used to provide a continuous record of an investigation, such as geologic mapping, geomorphic characterization, or fracture characterization. The notebook provides traceability from field activities to laboratory activities where photographs, samples, and maps are used to support a result: a measurement, a map, or a report. The notebook will provide traceability for the results or conclusions such that other similarly qualified individuals could arrive at the same conclusions without recourse to the investigator.

6.3.1.1 For field and/or laboratory activities, document the items listed below for each site or task. If one of the items listed below does not apply during any part of the work, mark "NA" beside that item. If an item becomes applicable during the process of the work, document that item when it becomes applicable.

- Date.
- Description of the work to be done (description may include reference to other notebooks, procedures, manuals, texts, etc.).
- Description of the location, reference to a map or photograph that shows the site (if appropriate).
- Methods and objectives (state the methods to be employed, and objectives of the work, reference a SOP or other information if appropriate).
- Equipment (list any major equipment or special materials; common field equipment does not need to be identified)
- Software (if doing data reduction or data analysis).
- Samples collected or utilized (by identification number).

UNCONTROLLED

- Data or observations.
- Weather conditions (when appropriate).
- Conclusion (when appropriate).

6.3.1.2 In subsequent entries (follow-up in a site or task), provide detailed daily entries of the work performed and results obtained, addressing the items listed in Section 6.3.1.1 as appropriate. Daily entries are not required for days in which work was not performed.

6.3.1.3 Describe any changes made to the original method(s) stated in 6.3.1.1, as appropriate.

6.3.2 Entries that Document Tabulated Data and Sample Tracking

These types of entries provide a continuous record of geologic sample traceability, e.g., an inventory of samples that have a unique number identifier that allows tracking a geologic sample from the time it is collected in the field until its disposition. This traceability must be maintained until the sample is consumed or the activity concludes. Sample history must be able to be reconstructed from the combined use of sample tracking logs and/or notebooks in which sample studies are documented. Site traceability for geologic samples is maintained by using field notebooks, maps, and/or photographs. Tabulated data can be a result of analysis (e.g., microprobe), measurements (e.g., point counts, fracture lengths), in which information that must be captured is that information that will allow other individuals to reproduce the results obtained by the original investigator.

6.3.2.1 For tabulated data and sample tracking, document the items listed below. If one of the items listed below does not apply during any part of the work, mark "NA" beside that item. If an item becomes applicable during the process of the work, document that item when it becomes applicable.

- Description of the work to be done (description may include reference to other notebooks, procedures, manuals, texts, etc.).
- Headings for the table columns that are clear, or an entry with an explanation for the headings.
- Sample identification number.

UNCONTROLLED

- Date of laboratory work (when appropriate).
- Brief description of sample or description of the process that the sample is being put through.
- Disposition of a sample (when appropriate).

6.3.3 Entries that Document Activities Prescribed by Los Alamos ER Procedures

When documenting work that is performed following an ER procedure, the following requirements must be followed:

6.3.3.1 Record the identification number (including the revision number) of the applicable Los Alamos ER procedure. The identification number of the procedure does not need to be recorded every time if the same procedures are being used for the activities documented in the notebook. The procedure identification number can be noted in the beginning of the notebook with a note such as: "the activities documented in this notebook were conducted following ER-SOP-##."

6.3.3.1 Enter any information required by a step in the procedure.

6.3.3.2 Investigators who deviate from procedural guidance must identify the step at which the deviation occurred, recording the reason for the deviation, and describing the results of the deviation. Evaluate any data produced by a deviation from procedural guidance, and enter a statement in the notebook explaining the acceptance or rejection of the data. Then, sign and date rejected data and draw a diagonal line through the rejected data.

UNCONTROLLED

6.4 Review of Notebooks

6.4.1 Investigators are responsible for selecting a technical reviewer to review their notebooks. The technical reviewer must have the expertise necessary to understand the work being reviewed; however, the technical reviewer must not have performed the work they review.

6.4.2 Submit notebooks for review at least every six months. More frequent reviews are done at the discretion of the investigator, for example, if there has been much activity and the notebook contains many new entries. Accompanying attachments are also reviewed.

6.4.3 The investigator is responsible for ensuring that the technical reviewers adhere to the following criterion during the review:

6.4.3.1 The reviewer determines whether the notebook entries are written in sufficient detail such that another similarly qualified individual could repeat the work described and achieve comparable results without recourse to the original investigator.

6.4.3.2 If the reviewer determines that the entries *meet* the criterion in 6.4.3.1, the following steps are performed:

a. The reviewer provides a review statement that characterizes the review (e.g., "notebook read and understood"). The reviewer records this statement after the last entry reviewed, and after the review comments.

b. The reviewer identifies the pages reviewed, signs and dates the notebook after the review statement, and returns the notebook to the investigator.

c. The investigator copies the notebook and attachment pages that were reviewed and ensures that a copy is filed with the Records Processing Facility.

6.4.3.3 If the reviewer determines that the entries *do not meet* the criterion in 6.4.3.1, the following steps are performed:

a. The reviewer provides review comments that describe the deficiencies. The reviewer records the review comments after the last entry reviewed.

b. The reviewer identifies the pages reviewed, signs and dates the notebook after the review statement, and returns the notebook to the investigator.

c. The investigator addresses the reviewer's comments and resubmits the notebook to the reviewer. Steps 6.4.3.1 through 6.4.3.3 are repeated until the notebook meets the criterion in 6.4.3.1.

NOTE: Generally, notebooks that have not had entries within the last year should be reviewed and submitted to the Records Processing Facility as a record. However, some notebooks for continuing investigations may be kept active for longer periods. Attachments are usually submitted with a notebook, except when the attachments contain information that is being carried forward to other notebooks.

7.0 REFERENCES

UNCONTROLLED

LANL-ER-SOP-01.04, R0, Sample Control and Field Documentation

8.0 RECORDS

It is the responsibility of the notebook author to ensure that the record package generated as a result of this procedure is submitted to the Records Processing Facility. The package should include:

- Copy of completed and reviewed notebook.
- Attachments to notebook, as appropriate.

9.0 ATTACHMENTS

None.

UNCONTROLLED

Los Alamos National Laboratory **Environmental Restoration Program** Standard Operating Procedure	No: LANL-ER-SOP-04.01 Rev: 0

Drilling Methods and Drill Site Management

UNCONTROLLED

	(Print Name)	(Signature)	(Date)
Preparer:	Sandra Wagner	Sandra Wagner	12-24-91
Quality Review by:	Larry Maassen	Larry Maassen	1-22-92
Technical Review by:	Sue J. Goff	Sue J. Goff	1/23/92
~~PM~~ QPPL Approval:	Robert W Vocke	Robert W Vocke	3-4-92
QPPL ~~PM~~ Approval:	Karen L Warthen	Karen L Warthen	3/4/92

Effective Date: 3-16-92

Drilling Methods and Drill Site Management

Table of Contents

1.0 PURPOSE 2

2.0 SCOPE 2
- 2.1 Applicability 2
- 2.2 Training 2

3.0 DEFINITIONS 2

4.0 BACKGROUND AND/OR CAUTION 6

5.0 EQUIPMENT 7

6.0 PROCEDURE 7
- 6.1 Preparation 7
- 6.2 Operation 8
- 6.3 Post-operation 9

7.0 REFERENCES 9

8.0 RECORDS 10

9.0 ATTACHMENTS 10

UNCONTROLLED

Drilling Methods and Drill Site Management

1.0 PURPOSE

The purpose of this procedure is to describe drilling methods that may be used during a field effort and to define the measures necessary for implementing a Drilling Package to meet the subsurface sampling requirements for an operable unit (OU) as a part of an Resource Conservation and Recovery Act (RCRA) Facility Investigation (RFI).

2.0 SCOPE

2.1 Applicability

This procedure is applicable to the Field Team Leader (FTL) involved in soil or rock boring for the Environmental Restoration (ER) program.

2.2 Training

The FTL is responsible for monitoring the proper implementation of this procedure. All field team members should document that they have read and understand this procedure and the procedures in Section 1.0, General Instructions.

3.0 DEFINITIONS

A. Annulus: The space between the drill string or casing and the wall of the borehole or outer casing.

B. Auger Flights: Winding metal strips welded to the auger sections that while being rotated, carry soil to the surface

C. Bailer: A long narrow bucket-like device with an open top and a check valve at the bottom that is used to remove water and/or cuttings from the borehole.

D. Casing: Casing for drilling purposes is usually seamless pipe constructed as a tube from hot metal into various diameters.

E. Center Plug: A plug inserted into the hollow center of a cutter head that prevents soil from coming up inside an auger.

F. Cutter Head: A special auger bit that is attached to the leading auger flight section and cuts a hole for the auger to follow.

G. Drill Bit: The cutting tool attached to the bottom of the drill stem.

H. Drill Collars: A heavy walled length of pipe. One or more drill collars are used to concentrate weight just above the drill bit to help keep the borehole straight.

UNCONTROLLED

I. Drill Rods or Drill Pipe: Special pipe used to transmit rotation from the rotation mechanism to the bit. The rods also transmit weight to the bit and conveys air or fluid which removes cuttings from the borehole and cools the bit.

J. Drilling Package: Consists of a detailed Drilling Plan and specifications to meet the sampling requirements defined in the site specific Sampling and Analysis Plan (SAP). A Geophysical Logging Plan and a Curation Plan for borehole material management may be included with this Package.

K. Drilling Summary: A primary record of well-site activity. The FTL is responsible for completing this log and will record all information pertaining to the progress of the daily drilling activities. An example of this log can be found in Attachment A.

L. Kelly: A hollow stem bar that is the main section of drill string to which the power is directly transmitted from the rotary table to the drill pipe.

M. Reamers: A type of drill bit that is used specifically for straightening, cleaning or enlarging a borehole.

N. Rotary Table: The table into which the kelly fits. The rotary table provides the power that forces the entire drill string and bit to turn on a table-drive machine.

O. Sand Pump: A bailer that is fitted with a plunger so that an upward pull on the plunger produces a vacuum that opens the valve and sucks slurried cuttings into the tubing.

P. Settling Pit: A pit provided for the temporary containment of drilling fluid before it is recirculated down the borehole and holds cuttings that drop out of the drilling fluid. The pit may be portable or a it may be excavated near the borehole and lined for temporary use. The pit should contain at least three times the volume of the material to be removed during drilling.

Q. Split Spoon: A 1 to 2 foot core barrel that can be opened to remove samples. This is a sampling method used with auger drilling. The drill rods holding the center plug and cutter are withdrawn from the borehole in sections, and the split spoon is attached, the drill string reconnected, and the sample taken.

R. Stabilizers: Drill Rods with large outside diameter dimensions used to maintain straight holes in soft formations by increasing the borehole wall contact.

4.0 BACKGROUND AND/OR CAUTION

Various drilling methods have been developed to achieve successful subsurface contact for retrieving suitable formation, gas and water samples. These include but are not limited to solid-stem augering, hollow-stem augering, direct rotary, reverse rotary, and cable tool drilling. Because geologic conditions range from hard rock to unconsolidated sediments, and environmental concerns are consequential, some drilling methods may be more appropriate than others.

UNCONTROLLED

A. Solid-Stem Augering

A boring method using single flight or continuous flight augers.

The single flight method uses one section of auger. They are commonly called earth augers or construction augers and are normally used for boring shallow, large diameter holes.

The continuous flighting method operates multiple sections of augers and is used to advance holes in stable formations. A single auger section length is generally 5 ft ; diameters range from 4 to 24 in. Borings have been advanced to 350 ft using 4 in diameter solid stem augers during investigations in the Los Alamos area. Drill rigs turn the auger sections with a rotary drive head. A hydraulic-feed mechanism pushes the auger section down or pulls it up.

A cutter head is attached to an auger designated as the lead auger. The cutter head is usually 2 in larger in diameter than the flights. As the cutter head breaks up the formation, the cuttings are brought to the surface by the flights which act as a screw conveyer.

B. Hollow-Stem Augering

The hollow-stem auger is a section of seamless steel pipe. Unlike the solid-stem auger method, drill rods can pass through the center of the hollow-stem auger section. The auger flights are welded to the pipe and act as a screw conveyer to bring the cuttings to the surface.

The lowest flight in a hollow-stem auger drill string, the lead auger, is equipped with a cutter head. The lead drill rod has a center plug which prevents cuttings from coming up inside the auger. The center plugs has an attached drill bit that helps to advance the auger.

Auger lengths are usually 5 or 10 ft and common outside diameters (OD) are 6 1/4 to 13 in (2 1/2 to 6 in inside diameter [ID]). At Los Alamos, experience has shown that depths of up to 250 ft have been drilled through volcanic tuff using 7 1/4 in OD (3.5 in ID) augers.

Hollow-stem augers can be used as temporary casing when setting wells to prevent caving of the borehole walls. A diagram of a hollow-stem auger can be found in Attachment B.

C. Direct Rotary Drilling

For this method, a borehole is drilled with a rotating bit. Cuttings are continuously brought to the surface by the circulation of drilling fluid.

UNCONTROLLED

Components of the rotary drilling machine may include drag bits or roller (cone) bits, reamers and underreamers, drill pipe, drill collars, stabilizers, a kelly, and a rotary table or top-head drive. A diagram of the direct rotary rig and the drill string for a direct rotary rig can be found in Attachment C.

A borehole is drilled by rotating a bit that is attached to the lead section of a drill pipe. Drilling fluid is pumped down through the drill pipe and out ports in the bit. The drilling fluid and cuttings flow upward in the annular space between the hole and the drill pipe. Drill pipe or rods must be added continuously as the borehole advances. The terms "tripping in" and "tripping out" are used to describe the process of running the drill rods into or pulling the drill rods out of the borehole, adding drill rods, taking splitspoon or core samples, or changing bits.

1. Mud Rotary

   Drilling fluids for mud rotary drilling consist of prepared mixtures of special-purpose (usually bentonite) materials and water. The ability of the fluid to lift cuttings will depend on the viscosity of the drilling fluid and the uphole velocity.

   When the cuttings are brought to the surface, they must pass through settling pits where the suspended particles settle out of the drilling fluid before mud pumps can recirculate the slurry back through the drill rods by way of a swivel hose connected to the kelly.

   The drilling fluid exerts hydrostatic pressure against the borehole walls preventing caving of the borehole walls. The fluid also forms a lining on the inside of the bore hole which may consist of small particles of clay and silt. The lining holds loose particles and crumbly material in place.

2. Air Rotary

   The direct rotary air drilling method uses air alone to lift the cuttings from the borehole. A large compressor is used to force air down the drill rods via the swivel hose that is connected to the kelly. The air passes through ports in the drill bit. As the bit cuts through the formation, cuttings are blown to the surface and collect around the top of the borehole.

   The direct rotary air method operates best in formations which are firm enough not to be destroyed by the blast of air exiting the drill bit. Casing may have to be installed in the overburden to avoid caving of the borehole wall.

   A second direct rotary method using air is called the "down-the-hole" drilling system. A pneumatic drill is operated at the bottom of the drill pipe by air pressure provided from the surface. The percussive energy of the piston striking the bit breaks the material below while the drill string is rotated to expose new surface. The air used to facilitate percussion is exhausted through the bit face and blows cuttings away from the cutting face and up the hole to the surface.

UNCONTROLLED

D. Reverse Circulation Rotary Drilling

This method is similar to the direct rotary drilling method and most pieces of equipment are essentially the same with the exception that they are usually larger. Only table drive rotary machines are used in reverse circulation drilling because of the large borehole diameter and the torque required to turn the bit. Reverse circulation rotary drilling is most successful in soft sedimentary rocks and unconsolidated sand and gravel.

In reverse rotary drilling, the suction end of the centrifugal pump rather than the discharge end (for direct rotary drilling), is connected through the swivel to the kelly and drill pipe. The drilling fluid and cuttings move upward inside the drill pipe and are discharged by the pump into the settling pits. A diagram of the reverse rotary circulation system can be found in Attachment D. The drilling fluid usually consists of water without additives, however, in many cases, at a certain depth in a borehole, the mud pump can be bypassed and an air compressor can be used to aid circulation of the drill fluid.

Another type of reverse rotary drilling is the dual-wall drilling method. The dual-wall method uses flush jointed, double-walled pipe in which the drilling fluid (air or liquid) moves up by reverse circulation. However, it differs from conventional reverse circulation because the drilling fluid does not run down the outside of the drill pipe, instead the flow is contained between the two walls of the dual-wall pipe and only contacts the walls of the borehole near the bit

UNCONTROLLED

E. Cable Tool Drilling

The cable tool method may be best suited for drilling in boulder deposits or rock strata that are highly disturbed, broken, fissured, or cavernous.

A cable tool drilling machine also commonly referred to as percussion, spudder and churn rigs, operates by repeatedly lifting and dropping a heavy chisel-type drill bit that is suspended on a heavy string of drilling tools. In consolidated formations, the bit breaks the rock into small fragments and in unconsolidated formations, the bit primarily loosens the formation. A diagram of the cable tool drilling system and string of cable tools can be found in Attachment E. In both instances, water (generally a small amount is added if little or no water is present in the formation) is mixed with the rock/soil particles to form a slurry or sludge at the bottom of the borehole. When the accumulation of this slurry impeded the penetration rate, slurry is removed by a sand pump or bailer.

When drilling in unconsolidated formations, casing must follow closely behind the drill bit and is usually driven by an operation similar to pile driving. Initially 3 to 10 ft of casing is driven when a borehole is begun. Usually, the hole is then drilled 3 to 6 ft below the casing; the casing is then driven down to the undisturbed material and the drilling is resumed.

F. Odex/Tubex

The Odex/Tubex drilling system advances a steel casing into the hole by means of percussive energy, while simultaneously reaming the hole slightly larger than the casing via the Odex/Tubex driver (guide device) which shoulders on the casing shoe. Intermittent coring can be done when the Down-The-Hole Hammer (DTH) with pilot and reamer bit are removed from the casing. While advancing the casing, all cuttings are safely diverted from the hole and stored in plastic bags for handling.

Health and Safety concerns involve monitoring all material coming out of the borehole and the air near the top of the borehole for volatile organic compounds using portable field screening instruments. Because many potential accidents may occur during a drilling operation due to the close contact with complex heavy machinery, site workers should be aware of drilling operations at all times and read and understand the SOPs in Section 2.0, Health and Safety in the Field.

UNCONTROLLED

5.0 EQUIPMENT

Refer to Attachment F, Equipment and Supplies Check List for Drilling.

6.0 PROCEDURE

Operation of the drill and equipment will be in accordance with applicable industry standards and regulatory requirements.

6.1 Preparation

A. Review the site Sampling and Analysis Plan (SAP), Drilling Package, and Health and Safety Plan for specific information on field activities and verify that the drilling equipment meets specifications outlined in the Drilling Plan.

B. Ensure that approval for property access has been obtained.

C. Have the work site cleared of all brush and minor obstructions and have the location of utilities and the proposed boring areas properly staked and identified.

D. ENSURE THAT PROPOSED BORING AREAS ARE NOT TRAVERSED BY UTILITY TRANSMISSION WAYS.

E. Ensure that the equipment and supplies listed in Attachment F are in place and in working order. Modify the equipment list in Attachment F for all items that are specific to each particular job.

F. Ensure that all downhole equipment, and the drilling rig, are decontaminated prior to use (as described in SOP 02.07, General Equipment Decontamination).

G. Prepare for the collection of potentially hazardous borehole materials (Refer to the SOPs in Section 1.0, General Instructions for guidance).

6.2 Operation

A. Ensure that drillsite operations are carried out as specified in the site-specific Drilling Package unless otherwise directed by the Operable Unit Project Leader. The Drilling Package will specify circulation, coring, completion and termination requirements.

1. Appropriate circulation method as specified in Drilling Plan must be followed.

   a. If drilling fluids are required, maintain portable recirculation tanks for accurate monitoring of fluid loss and contaminant control.

   b. Some air systems include an air line oil filter that requires frequent replacement to remove all oil residue from the air compressor. Describe the air system manufacturer's name, model number, air pressures used, the frequency of changing the oil filter, and the evaluation of air line filtering on the Daily Drilling Summary.

2. If coring is specified:

   a. Casing may be required for the full depth of the overburden (see Drilling Plan).

   b. Use appropriate drill rods, core barrels, and samplers.

   c. Upon removal of the core barrel, or samplers, from the drill hole, the crew should remove inner tube.

   d. The site worker is to take possession of the core and handle it in accordance with the curatorial plan and appropriate curatorial SOP's in Section 12.0.

3. If the borehole is to be completed as a monitoring well, review SOP 05.01, Monitoring Well Construction.

4. The termination of any boring should be in accordance with the SAP or approved by the OUPL.

B. Complete Daily Drilling Summaries. Verify that a detailed drilling report is being maintained. Sign and initial all pages.

UNCONTROLLED

C. Ensure that sampling equipment is decontaminated between sampling events (as described in SOP 02.07, General Equipment Decontamination).

D. Ensure that borehole materials are field screened for hazardous and radioactive constituents.

E. If borehole materials prove hazardous, take appropriate action for handling. Handle hazardous drillhole materials according to procedures established in SOPs in Section 1.0, General Instructions.

F. Ensure that a Chain-of-Custody/Request for Analysis form is completed for all analytical samples and accompanies the samples to the Sample Coordination Facility (SCF).

G. Monitor the collection and containerizing of all excess soil cuttings, waste materials, and decontamination solutions for proper disposal, as described in SOP-01.06, Management of RFI-Generated Waste.

H. If it is determined that geophysical logging and drillhole testing are to be done, coordinate these activities at the appropriate time.

6.3 Post-operation

A. Ensure that all drill site equipment is accounted for, decontaminated, and ready for shipment.

B. Ensure that the site is restored to predrilling conditions or as specified in the SAP.

C. Make sure all borehole locations are properly marked and the location identification is readily visible on the location stake.

D. Record all cleanup and hole abandonment information and note any uncompleted work (like site restoration or long-term monitoring) on the Daily Drilling Summary.

7.0 REFERENCES

Procedures directly associated with this procedure that should be reviewed prior to drilling are:

LANL-ER-SOPs in Section 1.0 General Instructions
LANL-ER-SOP-1.06, Management of RFI-Generated Waste
LANL-ER-SOPs in Section 2.0, Health and Safety in the Field
LANL-ER-SOP-05.01, Monitoring Well Construction
LANL-ER-SOPs in Section 12.0, Curatorial Management Activities

UNCONTROLLED

Driscoll, Fletcher G., 1984, Ground Water and Wells, Johnson Division, St. Paul, Minnesota, pps 268-313.

Environmental Monitoring Systems Laboratory. 1989. Handbook of Suggested Practices for the Design and Installation of Ground Water Monitoring Wells. EPA 600/4 - 89/034.

U.S. Environmental Protection Agency. December, 1987. A Compendium of Superfund Field Operations Methods. EPA /540/ p.87/001.

8.0 RECORDS

Completed Core Log Forms.
Completed Bit Cuttings Log Form.
Completed Daily Activity Log.
Completed Daily Drilling Summary.
Completed Chain-of-Custody/Request for Analysis form.

9.0 ATTACHMENTS

A. Daily Drilling Summary

B. Diagram of a Hollow Stem Auger

C. Diagram of a Direct Rotary Drill Rig and a Drill String

D. Diagram of a Reverse Rotary Circulation System

E. Diagram of a Cable Tool Drilling System and a String of Cable Tools

F. Equipment and Supplies Checklist for Drilling

UNCONTROLLED

Los Alamos National Laboratory
Environmental Restoration
DAILY DRILLING SUMMARY

Date: _____ Sheet _____ of _____

Technical Area _____ Operable Unit _____

Site Work Plan: _____

Signature: _____

UNCONTROLLED
EXAMPLE

BOREHOLE INFORMATION

Borehole ID	Drilled Interval	Shift Start Date	Shift Time	Completed By	Date	Checked By	Date

SUMMARY OF ACTIVITIES _____

GEOLOGIC INFORMATION _____

RUN INFORMATION

#	Interval	Cut	Recovered	Unrecovered	Unrecovered Interval	% Recovered	Verified By

TOTAL _____

DIAGRAM OF A HOLLOW STEM AUGER

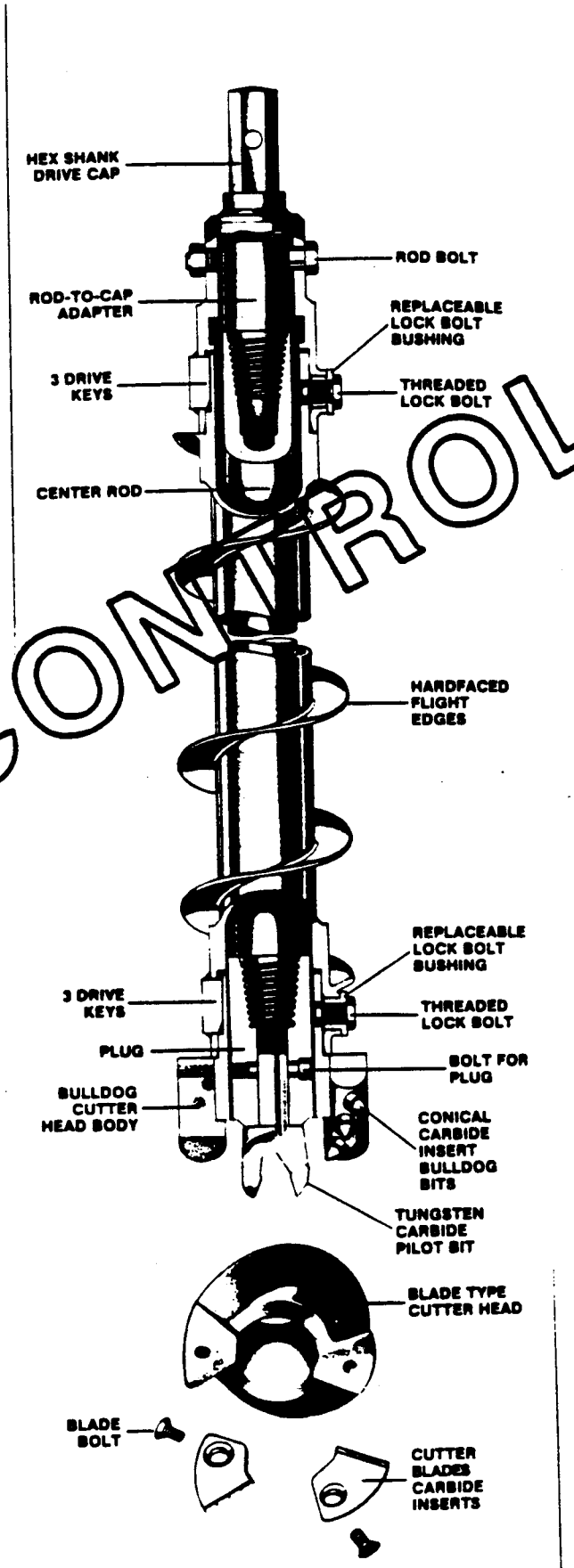

UNCONTROLLED

DIAGRAM OF A DIRECT ROTARY DRILL RIG AND A DRILL STRING

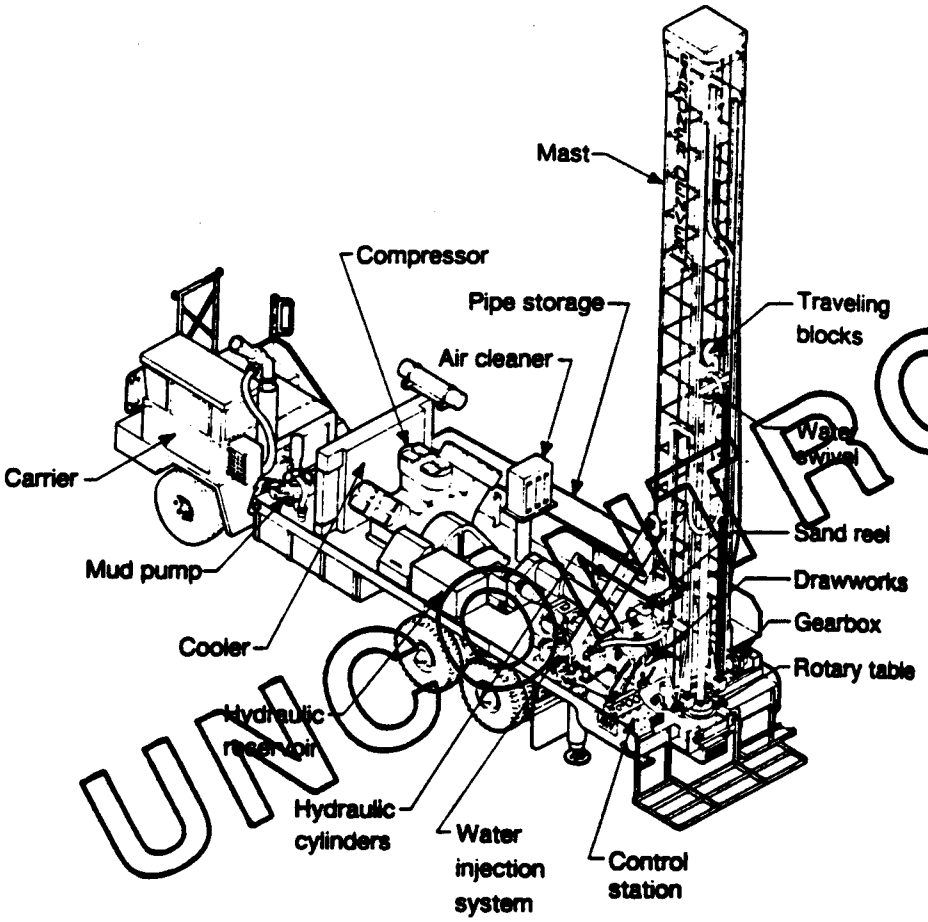

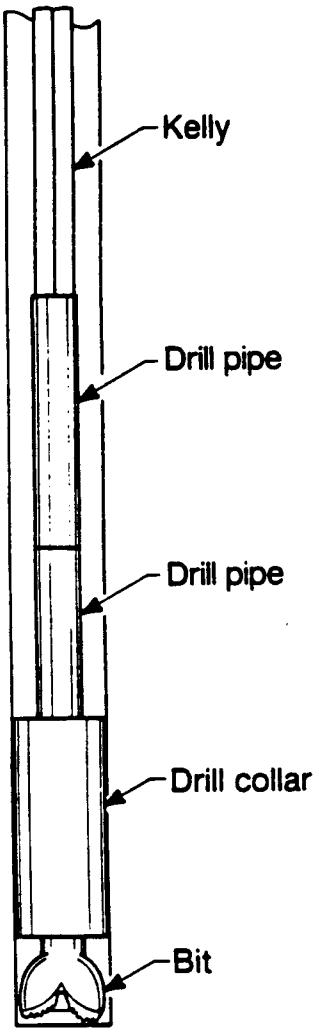

UNCONTROLLED

DIAGRAM OF A REVERSE ROTARY CIRCULATION SYSTEM

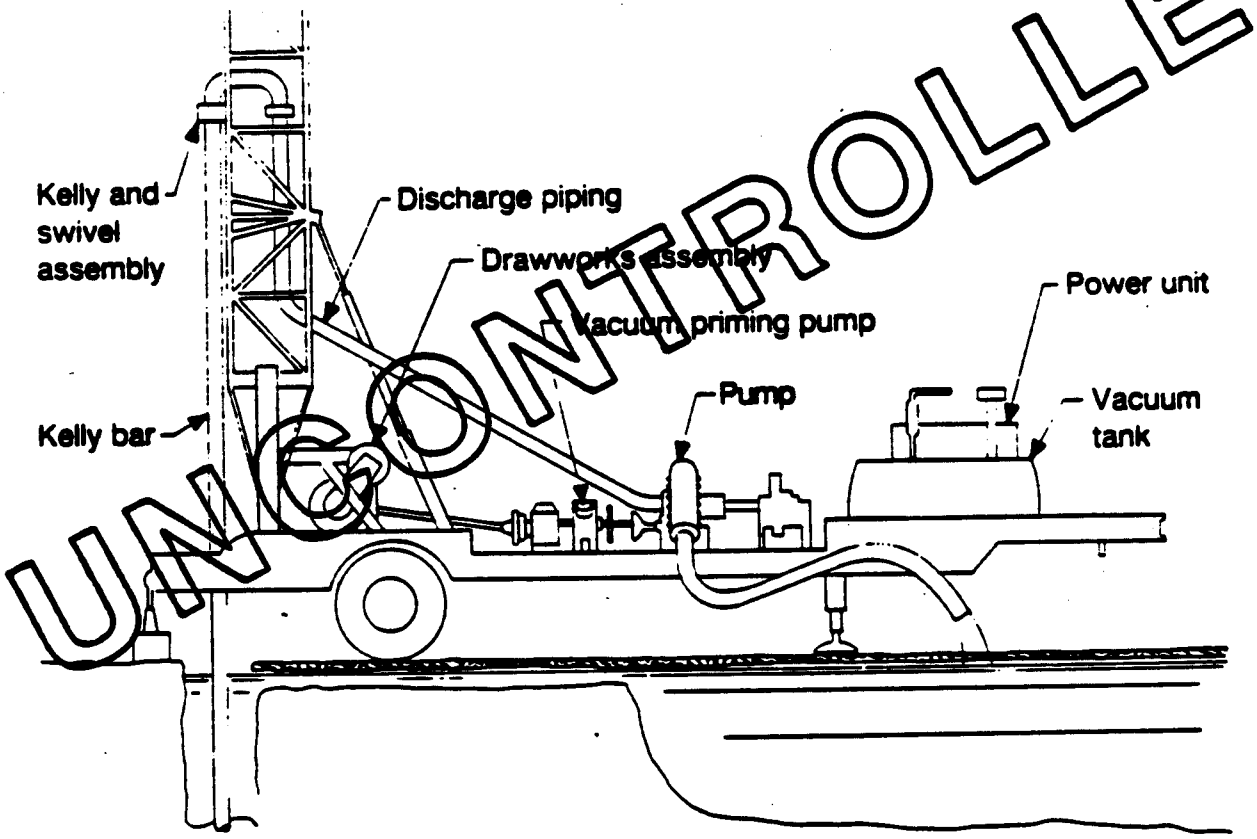

UNCONTROLLED

DIAGRAM OF A CABLE TOOL DRILLING SYSTEM AND A STRING OF CABLE TOOLS

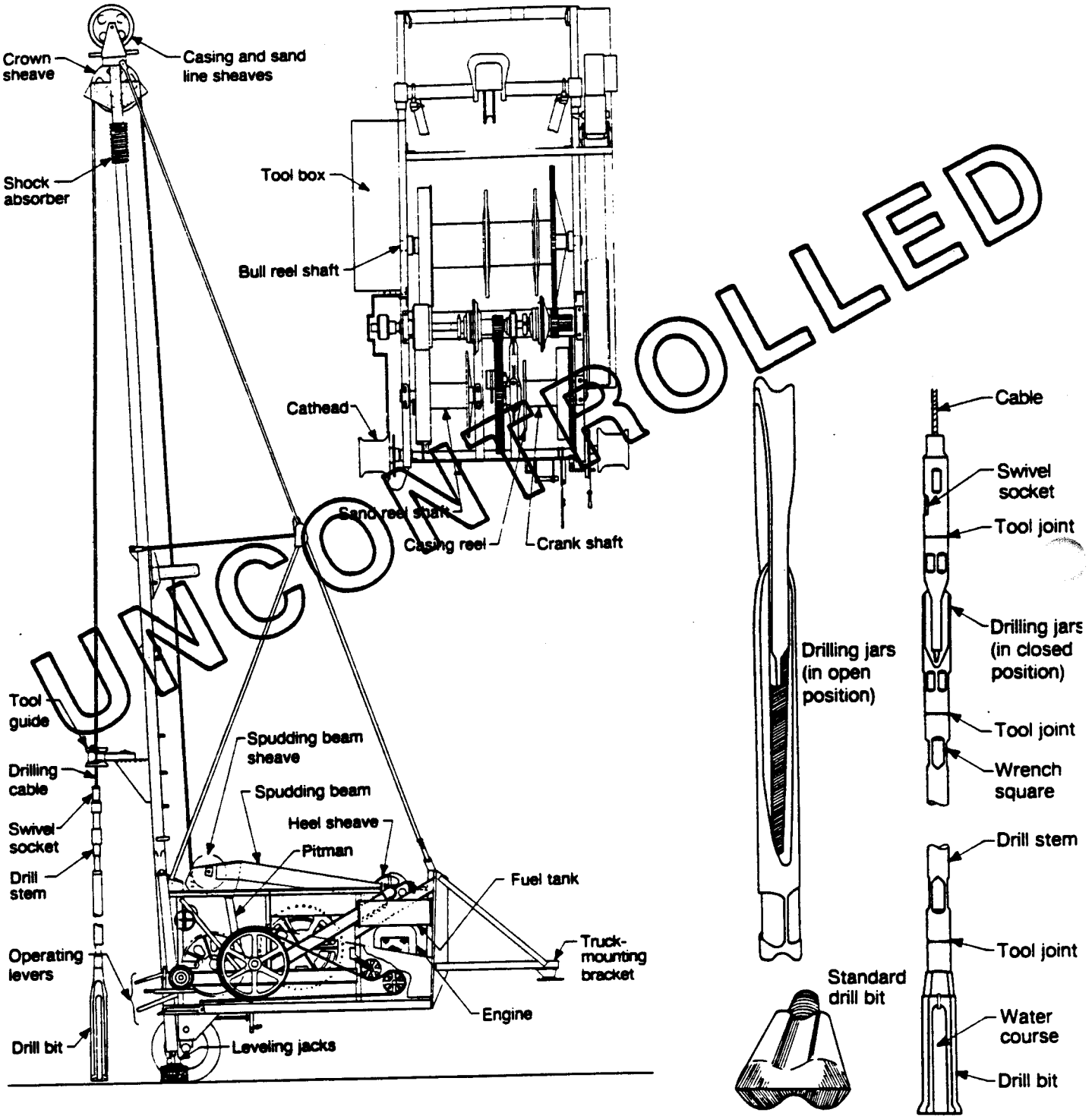

UNCONTROLLED

Los Alamos National Laboratory
Environmental Restoration
EQUIPMENT AND SUPPLIES CHECK LIST FOR DRILLING

GENERAL	ADDITIONAL SITE-SPECIFIC ITEMS
_____ Hard hat	_____ _____
_____ Safety glasses	_____ _____
_____ Gloves	_____ _____
_____ Steel-toed boots	_____ _____
_____ Hearing protection	_____ _____
_____ Coveralls	_____ _____
_____ Sample containers	_____ _____
_____ Appropriate clothing	_____
_____ Sprayer with clean potable water for dust control	_____ _____
_____ Any applicable licenses and permits	_____ _____
_____ Camera and film	_____ _____
_____ Measuring tape (tenths)	_____ _____
_____ Plastic sheets	_____ _____
_____ Core boxes	_____ _____
_____ Polystryene core cradles	_____ _____
_____ Large black permanent marker	_____ _____
_____ Strapping tape	_____ _____
_____ Hand knife	_____ _____
_____ Rock hammer	_____ _____
_____ Any additional supplies listed in associated procedures, as needed, or equipment specified in the Health and Safety Plan	_____ _____

UNCONTROLLED

Los Alamos National Laboratory **Environmental Restoration Program** Standard Operating Procedure	No: LANL-ER-SOP-04.04 Rev: 0

General Borehole Logging

Prepared by	J.G. CONAWAY (Print Name)	J.G. Conaway (Signature)	16 Ma[illegible] (Date)
Quality Review by	Larry Maassen (Print Name)	Larry Maassen (Signature)	5 April 1993 (Date)
Technical Review by	Su[illegible] (Print Name)	[illegible] (Signature)	March 30, 1993 (Date)
PM Approval	Robert W Vocke (Print Name)	Robert W Vocke (Signature)	5/24/93 (Date)
QPPL Approval	A.E. NORRIS (Print Name)	A.E. Norris (Signature)	May 24, 1993 (Date)

Effective Date: June 25, 1993

UNCONTROLLED

GENERAL BOREHOLE LOGGING

Contents

1.0 PURPOSE 2

2.0 SCOPE 2
- 2.1 Applicability 2
- 2.2 Training 2

3.0 DEFINITIONS/ABBREVIATIONS/ACRONYMS 2
- 3.1 Definitions 2
- 3.2 Abbreviations and Acronyms 2

4.0 BACKGROUND AND/OR CAUTION 5
- 4.1 Health and Safety Concerns 5
  - 4.1.1 Machinery 5
  - 4.1.2 Electrical Devices 5
  - 4.1.3 Radioactive Sources 6
  - 4.1.4 Weather 6
  - 4.1.5 Contamination 6
  - 4.1.6 Other Hazards 6
- 4.2 Overview of Borehole Logging 6
  - 4.2.1 Introduction 6
  - 4.2.2 Types of Logs 7
    - 4.2.2.1 Contaminant Mapping Logs 7
    - 4.2.2.2 Engineering Logs 7
    - 4.2.2.3 Borehole Samples 7
  - 4.2.3 Calibration 7

5.0 EQUIPMENT 8

6.0 PROCEDURE 8
- 6.1 Before Soliciting Bids on the Logging Contract 8
- 6.2 Before Letting the Logging Contract 8
- 6.3 Preparing for the Logging Operation 8
- 6.4 The Logging Operation 9
- 6.5 After the Logging Operation 10

7.0 REFERENCES 10

8.0 RECORDS 10

9.0 ATTACHMENTS 11

UNCONTROLLED

GENERAL BOREHOLE LOGGING

1.0 PURPOSE

The purpose of this procedure is to describe the general process for obtaining borehole logging data of acceptable quality regardless of logging system or logging contractor, to meet the site characterization and/or subsurface sampling requirements for an operable unit (OU) as part of a Resource Conservation and Recovery Act (RCRA) Facility Investigation (RFI).

2.0 SCOPE

2.1 Applicability

This procedure is applicable to the Environmental Restoration (ER) personnel involved in borehole logging for the ER Program.

2.2 Training

The Field Team Leader (FTL) is responsible for monitoring the proper implementation of this procedure. The FTL should ensure and document that relevant team members have read and understand this procedure along with all related procedures required for a safe and effective logging program and the procedures in Section 1.0, General Instructions.

In addition to this General Borehole Logging Standard Operating Procedure (SOP), the FTL responsible for borehole logging at a given OU should be familiar with the following documents:

- Other SOPs,
- Borehole Logging Technical Specifications (see definitions), and
- Contractor-Specific Logging Procedures (see definitions).

NOTE: This document contains general health and safety information. All SOPs in Section 2.0, Health and Safety in the Field must be followed in addition to this SOP.

3.0 DEFINITIONS/ABBREVIATIONS/ACRONYMS

3.1 Definitions

A. Blueline - A general term for a hard copy of borehole logging data in the form of graphs of one or more logging parameters as a function of depth. Historically these have been blue-on-white prints on z-fold paper; although that format is becoming less common, the term blueline is still commonly used to denote hard copies of logs regardless of copy color.

UNCONTROLLED

B. Borehole corrections - Factors obtained from charts or algorithms to correct the logging data for any conditions which deviate from the conditions under which the system was calibrated; also known as environmental corrections. For example, if the system was calibrated in a 6" borehole and is being used in a 4" borehole, the results may require correction. Other such corrections include fluid invasion, mudcake, casing, borehole fluid, and so forth.

C. Borehole logging - The process of making remote measurements of physical, chemical, or other parameters at multiple depths in a borehole.

D. Borehole Logging Technical Specifications (BLTS) - Documents included in the site-specific Drilling Package which define the capabilities and data quality required of prospective logging contractors for a given OU or portion of an OU.

E. Calibration - A test or tests performed against known standards with a given logging system to verify that the system is functioning properly and to provide calibration values which allow the data from the system to be used quantitatively. Standard calibrations include shop calibrations, which are performed periodically and after any equipment modification or repair, and field calibrations which are performed immediately before and after a logging run or operation.

F. Contractor-Specific Logging Procedures (CSLP) - Documents supplied by the logging contractor and approved by the OUPL, in conjunction with the Principal Investigator (PI) for Borehole Geophysics prior to awarding the contract, which define the detailed procedures by which a given logging system will be calibrated and operated to achieve objectives for data type and quality given in the BLTS.

G. Drilling fluid - A liquid or gas circulated into the borehole during the drilling process to cool and lubricate the bit and carry cuttings out of the borehole.

H. Drilling Package - A document package including detailed drilling, borehole logging, and borehole sample curation plans as necessary to meet the sampling requirements defined in the site specific Sampling and Analysis Plan (SAP) for a given OU.

I. Fluid invasion - The migration of drilling fluid or one or more components of the drilling fluid into the pores, fractures and other openings of the formation near the borehole.

J. Instrumental drift - A systematic change in the output of a given logging system due to causes inherent in the logging system, such as changing tool temperature or deterioration of an electronic component.

UNCONTROLLED

K. Log header - One or more pages of information included with each blueline and with logging data recorded digitally on magnetic tapes or disks. The minimum information required in the log header is specified in the Borehole Logging Technical Specifications and includes such information as name and location of hole, logging services performed, date and time of beginning and end of log, and so forth.

L. Logging run - A single data-collecting pass with a logging tool, moving up or down the borehole or a portion of the borehole. A given logging operation will generally consist of a main run and one or more repeat runs with each logging tool.

M. Logging tool - A sonde or device which is run in a borehole to make borehole logging measurements.

N. Logging tool stack - Two or more logging tools attached together and run as a single unit to save time and improve depth correlation between logs.

O. Mudcake - A layer of mud which may be deposited on the borehole wall when the drilling fluid contains mud; when the liquid component of the mud invades the formation, the solid component may be left on the borehole wall.

P. Percussion gun - A device run on a wireline to obtain samples from a borehole wall. On a single run, multiple sample tubes or hollow shells are driven into the borehole wall at various depths by explosives and retrieved along with the samples.

Q. Repeat run - A logging run, which may cover only a portion of the depth range of the main logging run, used to help judge data repeatability as a check on instrument drift and other data quality problems. The repeat run may be performed before or after the main run.

R. Verification - A test or tests, generally performed before and after logging in lieu of a calibration, to ascertain whether the logging system is operating properly. The verification differs from a calibration in that it does not provide updated system calibration values.

S. Wireline - The logging cable used to support the logging tool and carry electrical power and signals between the tool and surface instrumentation.

UNCONTROLLED

3.2 Abbreviations and Acronyms

BLQR	Borehole Log Quality Report
BLTS	Borehole Logging Technical Specifications
CSLP	Contractor-Specific Logging Procedures
ER	Environmental Restoration
FTL	Field Team Leader
LANL	Los Alamos National Laboratory
OU	Operable Unit
OUPL	Operable Unit Project Leader
RCRA	Resource Conservation and Recovery Act
RFI	RCRA Facility Investigation
SAP	Sampling and Analysis Plan
SCF	Sample Coordination Facility
SOP	Standard Operating Procedure
TTL	Technical Team Leader

4.0 BACKGROUND AND/OR CAUTIONARY

4.1 Health and Safety Concerns

Potential hazards during a logging operation are associated with machinery, electrical devices, radioactive sources, weather, possible contact with contaminants, and other hazards. Some of these hazards are listed below; this is not a comprehensive list.

4.1.1 Machinery

1. Winch problems such as drum brake failure, cable jumping flange, loss of winch power, cable "birdcaged" or tangled, and insufficient pulling power.

2. Rigging problems such as cable jumping sheave or failure of sheave wheel, tie downs, or supports.

3. Logging tool stuck in hole due to hole collapse, cable pulling out of cablehead at tool, cable key-seated.

4.1.2 Electrical Devices

1. Direct electrical hazards such as electrical shock and burns or electrical fires.

2. Indirect hazards such as failure of depth system or failure of weight system (tension).

UNCONTROLLED

4.1.3 Radioactive Sources

1. High-intensity, isotopic or chemical gamma-ray and neutron sources.

2. Pulsed neutron sources that may be accidentally actuated.

4.1.4 Weather

1. High winds increase machinery and electrical hazards.

2. Rain increases electrical shock hazard.

3. Lightning hazards.

4. Exposure.

4.1.5 Contamination

All material coming out of the borehole, including logging equipment, must be monitored for contamination and the air near the top of the borehole must be monitored for volatile organic compounds. Site workers should be aware of logging operations at all times and read and understand the SOPs related to Health and Safety in the Field.

4.1.6 Other Hazards

1. Fuel fires.

2. Carbon monoxide fumes.

3. Problems on drilling rig which might affect the operation.

4. Personnel problems such as inadequate training, carelessness or inattention, impairment (medication, drugs, ailments, etc.)

4.2 Overview of Borehole Logging

4.2.1 Introduction

In ER applications, borehole logging techniques are used for the *in situ* determination of physical, chemical, geological and hydrological parameters in boreholes. Borehole measurements can be used to help solve waste cleanup problems as part of initial site characterization, during remediation, and for post-remediation monitoring.

UNCONTROLLED

For accurate results to be achieved with a given logging system, it is essential that the system be calibrated against accepted standards and monitored for any malfunction or significant drift of the system calibration. In addition, the data must be corrected for non-standard conditions (conditions other than those encountered in the calibration).

4.2.2 Types of Logs

4.2.2.1 Contaminant Mapping Logs

Contaminant mapping logs provide direct information on the presence of contaminants inside or outside the borehole. Borehole logging devices exist which can give estimates of concentrations of certain contaminants. Contaminant mapping logs which are not Environmental Protection Agency-approved for quantitative analysis at the present time can nonetheless be used for screening and for supplying information on contamination between the locations of physical sample points along the borehole.

4.2.2.2 Engineering Logs

This category includes all logs which are not used for contaminant mapping. Examples include caliper (borehole diameter), induction resistivity (formation electrical resistivity), and gamma-gamma density (formation bulk density).

4.2.2.3 Borehole Samples

While not strictly logs, borehole samples can be obtained by some logging contractors. Typically, these take the form of borehole fluid samples, sidewall cores, or percussion gun samples.

4.2.3 Calibration

Accurate calibrations are necessary for the data to be used quantitatively; calibrations also play an important role in monitoring tool performance over time. The CSLP must include a complete set of written calibration procedures for all logging equipment involved in quantitative measurements. The logging contractor is responsible for maintaining full and complete documentation for all calibrations for all tools and shall provide copies of these records to the FTL for transfer to the ER Records Processing Facility.

Shop calibrations traceable to accepted standards are performed at specified time intervals as well as every time a tool is modified or repaired. Field or job-site calibrations are performed immediately befo

UNCONTROLLED

and after a logging operation or run (also known as pre- and post-log calibrations).

5.0 EQUIPMENT

The list of equipment required for borehole logging varies with the contractor and the specific log(s) being run. Refer to the BLTS and CSLP for the required lists.

6.0 PROCEDURE

Operation of the logging equipment will be in accordance with applicable industry standards and regulatory requirements.

6.1 Before Soliciting Bids on the Logging Contract

Before soliciting bids on the logging contract for an OU, detailed BLTS must be prepared. The success of the logging operation depends to a large degree on these specifications. The BLTS must define the type of logging system, the logging parameters required, precision, data accuracy and repeatability, depth accuracy, sample interval, calibration schedules and requirements, data formats and media, and so forth. The BLTS will be prepared by the Principal Investigator for Borehole Geophysics, in consultation with the FTL and OUPL.

6.2 Before Letting the Logging Contract

Specific detailed procedures depend on the logging system and the logging contractor being used. These CSLPs must be prepared and submitted by the prospective logging contractor for approval by the OUPL in consultation with the PI for borehole geophysics before the contract is finalized. The CSLP should conform to the general procedures given in this General Borehole Logging SOP.

6.3 Preparing for the Logging Operation

The FTL has the following responsibilities:

Ensure that approval for property access has been obtained.

Review the site SAP, Drilling Package including Borehole Logging Technical Specifications, and Health and Safety Plan for specific information on field activities. Verify that the logging equipment meets specifications outlined in the BLTS. Verify that the Contractor-Specific Logging Procedures meet the specifications outlined in the BLTS for each logging method to be applied.

Have the work site cleared of all brush and minor obstructions and have the location of utilities properly staked and identified.

UNCONTROLLED

Ensure that the specific logging equipment to be used has been shop calibrated within the required time period prior to the logging operation as specified in the BLTS. Ensure that the calibration(s) met the accuracy requirements given in the BLTS. Ensure that the logging equipment has been shop-calibrated subsequent to any repair or modification even if the equipment is not yet due for a routine shop calibration; ensure that the calibration was within acceptable accuracy tolerances as defined in the BLTS.

Ensure that all logging equipment–including cable, cablehead, and logging tool–has been decontaminated prior to use.

Prepare to monitor borehole air and logging equipment emerging from the borehole for contamination. (Refer to the SOPs in Section 7.0, References, for guidance.)

6.4 The Logging Operation

The FTL has the following responsibilities:

Ensure that logging operations are carried out as specified in the CSLP.

Each logging tool which is to be run must be field calibrated or field verified as required in the BLTS. Generally, a field calibration or verification is required both immediately before and immediately after a logging run or runs with a given logging tool. Ensure that this process is properly carried out according to the procedures given in the CSLP and that the readings are within acceptable limits as defined in the BLTS.

Ensure that the logging equipment is decontaminated between sampling events.

If borehole samples have been obtained by the logging contractor, such as water samples, sidewall cores or percussion gun samples, ensure that borehole materials are field screened for hazardous and radioactive constituents.

If borehole materials prove hazardous, take appropriate action for handling. Handle hazardous borehole materials according to procedures established in SOPs in Section 1.0, General Instructions.

Ensure that a Chain-of-Custody/Request for Analysis form is completed for all analytical samples and accompanies the samples to the Sample Coordination Facility.

Monitor the collection and containerizing of all waste materials and decontamination solutions for proper disposal, as described in SOP-1.06, Management of RFI-Generated Waste.

UNCONTROLLED

6.5 After the Logging Operation

The FTL has the following responsibilities:

Ensure that log headers are correct and complete and meet the specifications given in the BLTS. Sign and date as witness.

Obtain copies of field data in hard copy form (bluelines) and digital form (magnetic tapes or other form), as specified in the BLTS. These field copies are an important part of the data quality record, even though reprocessed data may be submitted by the logging contractor at a later time or date.

Ensure that all borehole logging equipment is accounted for, decontaminated and ready for transport.

Ensure that the site is restored to pre-logging conditions or as specified in the SAP. Ensure that borehole is capped and/or marked as required.

UNCONTROLLED

7.0 REFERENCES

Procedures and documents directly associated with this procedure that should be reviewed prior to logging include the following:

Borehole Logging Technical Specifications
Contractor Specific Logging Procedures
LANL-ER-SOPs in Section 1.0, General Instructions
LANL-ER-SOPs in Section 2.0, Health and Safety in the Field
LANL-ER-SOPs in Section 12.0, Curatorial Management Activities
LANL-ER-AP-02.1, Records Management

Useful references include:

Richard M. Bateman, 1985, "Log Quality Control," International Human Resources Devel. Corp., Boston, ISBN 0-934634-89-0, 398 pp.

Darwin V. Ellis, 1987, "Well Logging for Earth Scientists," Elsevier Science Publishing Co., Inc., 52 Vanderbuilt Ave., New York, New York, 10017

8.0 RECORDS

Hard copies of logging data ("bluelines") with completed headers, signed by logging contractor representative and FTL or other approved witness as specified in the BLTS.

Digital data on magnetic tape or as otherwise specified in the BLTS.

Completed Borehole Log Quality Report (BLQR) for each logging service run, as specified in the BLTS. Completing the BLQR is the responsibility of the FTL.

Calibration records as specified in the BLTS.

Completed Chain-of-Custody/Request for Analysis form for borehole samples, if any.

The FTL will ensure that copies of all records are conveyed to the Records Management Facility, MS M707

9.0 ATTACHMENTS

N/A

UNCONTROLLED

Los Alamos National Laboratory **Environmental Restoration Program** Standard Operating Procedure	No: LANL-ER-SOP-5.01	Rev: 0

Monitor Well Construction

	(Print Name)	(Signature)	(Date)
Prepared by	Sandra E. Waegner	Sandra Waegner	3-26-92
Quality Review by	Micheline Devaurs	Micheline Devaurs	3/26/92
Technical Review by	ALAN K. STAMER	[illegible]	4/2/92
	Sue J. Goff	Sue J. Goff	3/17/92
PM Approval	Robert W. Vocke	Robert W. Vocke	5/21/92
QPPL Approval	Karen L. Warthen	Karen L. Warthen	5/20/92

Effective Date: 6-1-92

UNCONTROLLED

Monitor Well Construction

Table of Contents

1.0 PURPOSE 2

2.0 SCOPE 2
- 2.1 Applicability 2
- 2.2 Training 2

3.0 DEFINITIONS 2

4.0 BACKGROUND AND/OR CAUTIONS 3

5.0 EQUIPMENT 3

6.0 PROCEDURE 4

7.0 REFERENCES 9

8.0 RECORDS 10

9.0 ATTACHMENTS 10

UNCONTROLLED

4.0 BACKGROUND AND/OR CAUTIONS

A properly constructed monitor well allows access to aquifer fluids for the collection of ground water samples and determining aquifer characteristics. Ideally, the well should not alter the medium that is being sampled.

Drilling Package - The site-specific documentation provides information about the scope and details of monitor well construction at a given site. The following is a list of critical issues involved in monitor well construction:

- Soil boring or rock coring technique
- Casing and screen materials, including composition and dimensions
- Screen-slot size, screen type, and screen interval
- Filter pack composition, gradation, and dimensions

Refer to the site-specific documents for the location and specifications of the wells to be installed. Wells are generally installed as components of monitoring systems in accordance with EPA guidance (EPA 1986), Hazardous and Solid Waste Amendments Permit, Module VIII, May 1980; and New Mexico State Engineer regulations.. Borehole drilling, development of the wells, collection and measurement of samples, and the documentation of data will be performed as described in the associated procedures.

UNCONTROLLED

5.0 EQUIPMENT

The materials necessary for following this procedure are listed in three categories: health and safety; supplies; and equipment. Additional equipment should be identified on the Daily Activity Logs, the Well Completion Information form (Attachment A) or the Borehole/Well Construction Field Data Log form (Attachment B).

Health and Safety

- Hard hat
- Safety glasses
- Gloves
- Steel-toed boots
- Hearing protection
- Coveralls, splash and cold weather protection

Supplies

- Silica sand
- Portland cement
- Approved water supply, preferably untreated
- Well screen
- Sample containers, 1/2- and 1-pint size
- PVC casing, screen, cap and bottom plug for each well

Monitor Well Construction

1.0 PURPOSE

This procedure provides instructions for acceptable and consistent monitor well construction.

2.0 SCOPE

2.1 Applicability

This procedure provides instructions to the site workers who will be constructing monitor wells. All site workers must refer to the site-specific work plan for more information on the scope of work and specific requirements for monitor well construction.

2.2 Training

The field team leader is responsible for ensuring the proper implementation of this procedure. All site workers should be familiar with the objectives of the monitoring well construction, and must document that they have read and understand this procedure along with the procedures in Section 1.0, General Instructions.

UNCONTROLLED

3.0 DEFINITIONS

A. Annular space or annulus: The space between the borehole wall and the well casing, or the space between a casing pipe and a liner pipe.

B. Tremie pipe: A device that allows pressure grouting up, without the introduction of appreciable air pockets on the bottom; usually a small-diameter pipe, used to carry sand pack, bentonite, or grouting materials to the bottom of the borehole.

C. Bentonite: A hydrous aluminum silicate available in powder, granular, or pellet form that provides a tight seal between the well casing and borehole wall. Powder or granular form is preferred due to possible bridging problems caused by the quick swelling of the pellets. Bentonite is also added to drilling fluid to keep the borehole open. Bentonite is typically used in a 5% mixture with Portland cement to form a pumpable grout that expands as the material hardens.

D. Well screen: Perforated or wire-wrapped casing that allows fluids, but not sand pack material, to enter the well.

E. Well casing: Piping that will allow access to the fluids within the target aquifer upon completion of the well.

- Prepacked PVC screen sections, if needed
- Mechanical centralizers
- Bentonite pellets or crushed bentonite (pure montmorillonite)
- 5 foot length of pipe (black iron or galvanized, 6 or 8 inch diameter, according to needs)
- Guard posts

Equipment

- Drill rig and accompanying equipment
- Tremie pipe
- Tape measure
- Nylon rope
- Protective steel casing
- Locking cap
- Padlocks
- Surveying pins

UNCONTROLLED

6.0 PROCEDURE

1. Coordinate schedules/actions with the installation staff.

2. In all cases, the minimum physical protection should include a hard hat, safety glasses, gloves, steel-toed leather boots, hearing protection, if indicated by Industrial Hygiene Monitoring, and coveralls for splash and cold weather protection.

3. Research site hydrogeology to estimate key parameters (for example, anticipated aquifer depth and thickness, types of contaminants, and grain-size distribution).

4. If water/sand slurry or grout is required, the source(s) of any water used must be approved, based on potential contamination, by the field team leader before field operations. A potable, nonchlorinated source is preferred.

5. Any use of solvents, glues, or cleaners are prohibited for use less than grade unless otherwise stated in the specifications. If official permission is received for their use, describe the material and include the manufacturer and type (specification). The use of pipe dope, grease, soap, and oil is also prohibited for any purpose on site.

6. Monitor borehole opening and the breathing zone according to SOP-10.03, Monitoring of Combustible Gas Levels; SOP-10.01, Monitoring of Organic Vapors with a Photoionization Detector; and SOP-10.02, Monitoring of Organic Vapors with a Flame Ionization Detector. Perform readings as often as necessary to ensure the safety of workers. Record all measurements on the data collection forms included with these SOPs.

7. Record all field measurements and comments on the Well Completion Information (Attachment A) or the Borehole/Well Construction Field Data Log form (Attachment

B). Fill out the forms as described in Attachment F. Use the Daily Activity Log in SOP-1.01.01 with these forms.

8. Record pertinent information on the diagram of the well installation on the Well Completion Information form. At a minimum, show the depth from surface to the bottom of the boring, sump depth and location, screen location, coupling design and location, granular backfill, seals, grout, cave-in, centralizers, and the height of the riser above the ground surface. Record the actual composition of the grout, seals, and granular backfill on each Borehole/Well Construction Field Data Log form. Include the screen slot size (in inches), slot configuration, and screen manufacturer.

9. If appropriate, include the protective casing detail on all well sketches.

10. The following is a list of instructions for using a sand pack, if required:

    a. The average grain size of the sand is based on the grain-size distribution that matches screen size and medium being monitored in the screened formation. Use sand having a gradation that will allow less than 10% of filler pack material to pass through the screen slots.

    b. Take at least one sample (1/2- to 1-pint size) from each shipment of granular material, assign an identification number, and store it with the soil samples. Describe each sample in terms of lithology, grain-size distribution, and source (company from which it was purchased and the pit or quarry of origin). Record the identification number on the sketch of each installation for which that material was used.

    c. The specifications of the proposed sand-pack material should be submitted by the contractor for approval before use. Use well-sorted (poorly graded) sand, which is clean, inert, and siliceous.

11. Typical well construction features are shown in Attachments C and D. When installed as a piezometer or well point (for water levels only), the well configuration may vary significantly from these drawings. After well development is complete, indicate the static water level on the well construction diagram.

12. In the event that a predominantly fine-grained, water-bearing unit is encountered, it may be desirable to construct a monitor well using a factory completed PVC Schedule 40 screen and filter pack subassembly. This type of device, available from several vendors, consists of two PVC well screens separated by a prepacked sand filter of inert silica sand. Various sand pack gradations are available. This type of device has been demonstrated to be effective in the mitigation of ground water sample turbidity problems, or where well installation is impeded by difficult physical conditions, such as adverse hydrostatic pressures.

13. The prepacked screen subassembly is attached to the solid well PVC casing in the same manner as a conventional screen. The fine-grained formative materials are

UNCONTROLLED

allowed to collapse against the prepacked well screen. Final well construction tasks are identical to those for a conventional well, including the placement of an expansive bentonite seal, grouting, security pipe/locking cap and surface pad.

14. When applicable (i.e., when not installing through hollow stem auger), use centralizers (not less than one every 20 ft) for the uniform and complete annular filling by granular backfill, seal, and grout materials. Fasten centralizers to the well casing by mechanical fasteners that are radially spaced at 120° or 90° intervals. On the Borehole/Well Construction Field Data Log form (Attachment B), or the Daily Activity Log provide a description of the centralizers and their locations.

15. If specified, place a sand pack (inert silica) in the annulus next to the well screen in all monitor wells. The sand pack ensures a continuous flow capability from the natural formation to the well bore.

    a. Fill the annulus between the well screen and borehole wall with silica sand.

    b. For wells deeper than 30 ft, or as determined by the field team leader, use a Tremie pipe to place the sand pack.

    c. It is necessary to pump sufficient sand slurry to cover the screen after the sand pack has densified and settled. If well specifications are not stated in the site documents, a general rule of thumb is to apply a 2-ft-thick layer of sand slurry over the top of the screen.

    d. Ascertain the depth of the top of the sand with an acceptable measuring device and verify the thickness of the sand pack. If necessary, add more sand to bring the top of the sand pack to the proper elevation, but in no case may more than two feet of sand be added above the well screen.

    e. Under no circumstances should the sand pack extend into any aquifer other than the one to be monitored. In most cases, the well design can be modified to allow for a sufficient sand pack without the threat of cross flow between producing zones.

    f. The field team leader is the only individual authorized to modify an existing well design. Any modification should be noted on the Borehole/Well Construction Field Data Log or the Daily Activity Log.

    g. If specified in the project documents, partial development of the sand pack may be required before installation of bentonite seal and grout.

16. Place a bentonite pellet seal between the sand pack and grout to prevent infiltration of cement into the filter pack and the well. In special circumstances, an open borehole may be drilled to a depth below where the screen is set. If grout is used to seal off a lower aquifer or as backfill up to the proper level, place a bentonite seal above the grout before the casing, screen, and sand pack are introduced. Allow the

UNCONTROLLED

grout to set up for a minimum of 24 hr before placing the seal. Place the bentonite seal in the borehole as described below.

a. Fill the annulus between the well casing and borehole above the filter pack with a bentonite seal at least 2 ft thick (vertically).

b. Use bentonite pellets or crushed bentonite. The pellets should have a minimum purity of 90% montmorillonite clay and a minimum dry bulk density of 75 lb/ft3 for 3/8-inch to 1/2-inch pellets (as provided by American Colloid) or the equivalent. Pour the bentonite pellets directly down the annulus. No pellets will be placed into the well bore. Place a cap over the top of the well casing before pouring the bentonite pellets from the bucket. Pour the pellets from different points around the casing to ensure even application. A Tremie pipe may be used to redistribute and level the top of the seal.

c. For wells deeper than approximately 30 ft, where no threat of borehole collapse exists, the bentonite may either be poured as pellets or introduced as a slurry through a Tremie pipe. The method should be determined by the site manager after evaluating the condition of the well and borehole wall. If there are no centralizers in the upper portions of the casing, manipulate the casing to prevent pellets from hanging up in the narrow annulus and to allow them to settle to the bottom as rapidly as possible.

d. If a slurry of bentonite is used as an annular seal, prepare the slurry by mixing powdered or granular bentonite with potable water. The slurry should be of sufficiently high-specific gravity and viscosity to prevent its displacement by the grout that will be placed above. Regardless of depth and depending on fluid viscosity, a few handfuls of bentonite pellets may be added to solidify the surface of the bentonite slurry as a precaution. In addition, a few feet of a sand pack may be emplaced above the bentonite slurry to prevent movement of the overlying grout into the saturated zone.

e. Before placing the bentonite seal, be sure the filter pack has settled by measuring the depth of the top of the sand with the Tremie pipe. The sand pack should provide an adequate cover over the screen.

f. Visually check the condition of the slurry by pumping into a bucket or onto the ground. Retract the Tremie pipe 3 ft from the top of the sand pack and begin pumping.

g. In materials that will not maintain an open hole, leave the hollow-stem augers in the hole during filter pack placement and bentonite seal placement to the extent practical. Maintain the bentonite in the auger a small distance for even placement, as the augers are removed.

h. Measure the distance to the top of the seal using an acceptable measuring device to verify that the proper thickness of seal has been placed in the

UNCONTROLLED

annulus.

i. Until the specified quantity of bentonite has been placed in the well annulus, repeat the application and verification.

17. Allow a minimum of 24 to 48 hours after the bentonite seal has been placed, then place grout from the top of the bentonite seal to the surface. Use grouts as specified in project documents. Place grout in the monitoring wells as described below.

    a. Fill the annulus between the well casing and borehole wall with grout.

    b. Pump the grout through the Tremie pipe to the bottom of the open annulus until undiluted grout flows from the annulus at the ground surface.

    c. The grout should consist of a neat cement and bentonite mix, applied according to the EPA (1986) guidelines. Use only grout mixed with approved water.

    d. In materials that will not maintain an open hole, leave the hollow-stem augers in the hole during grouting to the extent practical. Remove them as the level of the grout rises above the bottom of the augers.

    e. If necessary, add more grout to compensate for the removed casing or auger and Tremie pipe and to ensure that the top of the grout is at or above the ground surface.

    f. The protective casing should now be placed over well casing.

    g. After the grout has set (about 48 hr), fill any depression in the grout caused by settlement with a grout mix similar to that previously described.

18. Install protective casing around all monitor wells. The minimum elements in the protection design include the following:

    a. The protective steel casing and locking cap should be weatherproof and should be secured to the casing by padlocks.

    b. Set the protective casing (5-ft minimum length) so that the top of the pipe is about 1.5 to 3 ft above the ground surface and grout it in place as shown in Attachments D and E.

    c. Use the 8-inch-diameter pipe for 4-inch wells and 6 inches for 2-inch wells (depending on approved borehole size). A drain hole near ground level that is 0.5 inch in diameter is permitted.

    d. Provide a protective steel cap or equivalent device and secure it to the top of each protective casing.

UNCONTROLLED

e. Mark the location ID on the inside and outside of the cover with indelible ink.

f. Form and pour the concrete protective pad around the protective steel casing. Pad dimensions are typically not less than 2 ft by 2 ft by 0.5 ft. The concrete protective pad, once constructed, will form a continuous concrete seal extending below the maximum anticipated depth of frost penetration.

g. Place surveying pin in the concrete protective pad.

19. In addition to the protective casing, the installation of guard posts is recommended in areas where vehicle traffic might pose a hazard.

    Guard posts shown in Attachment E consist of steel posts that are at least 3 inches in diameter or tee-bar driven steel posts. Three guard posts are radially located 4 ft around each well and driven 2 ft below the ground surface, having a minimum of 4 ft above the ground surface with flagging in areas of high vegetation. Each post may be cemented in place.

20. In the event that a borehole must be abandoned for failure to reach the specified depth (or any other cause), over-ream the borehole and apply grout with a Tremie pipe from the bottom up, under continuous positive pressure, in a single monolithic effort.

21. In the event that a well must be abandoned for failure to reach specified depths, loss of tools, or inadvertent contamination, rip the screened interval with an appropriate tool. Grout the well with a Tremie pipe (from the bottom up).

22. Ensure all equipment is accounted for and determine if any equipment needs to be decontaminated.

23. Inventory equipment and supplies. Repair or replace all broken or damaged equipment. Replace expendable items. Return equipment to the equipment manager and report incidents of malfunction or damage.

24. Make sure all monitoring wells are properly labeled and the location ID is readily visible on the protective casing.

25. Ensure that well surveying for horizontal control and datum determination are completed and that the necessary information is entered on the Well Completion Information form.

7.0 REFERENCES

LANL-ER-SOPs in Section 1.0, General Instructions
LANL-ER-SOP-4.01, Drilling Methods and Drill Site Management
LANL-ER-SOP-10.02, Monitoring of Organic Vapors With a Flame Ionization Detector
LANL-ER-SOP-10.03, Monitoring of Combustible Gas Levels

UNCONTROLLED

Barcelona, M. J., J. P. Gibb, J. A. Helfrich, and E. E. Garske. 1985. "Practical Guide to Ground water Sampling." US. Environmental Protection Agency report EPA/600/2-85/104. US. Government Printing Office, Washington, DC.

DOE. 1985. "Field Technical Representative Manual." 2nd ed. Uranium Mill Tailings Remedial Action Project. US. Department of Energy, Albuquerque, New Mexico.

EPA. 1986. RCRA Ground Water Monitoring Technical Enforcement Guidance Document. OSWER, Washington, DC.

EPA. 1990. Handbook of Suggested Practices for the Design and Installation of Ground water Monitoring Wells. EPA/600/4-89/034. Las Vegas, Nevada.

UNCONTROLLED

8.0 RECORDS

Records generated as a result of the use of this procedure:

Completed Daily Activity Log, including any deviations or other pertinent information
Completed Well Completion Information Form
Completed Borehole/Well Construction Field Data Log Form
Completed Daily Drilling Summary Form

Other forms that may be necessary are the health and safety forms from the following procedures:

If other records are generated, they are to be paginated and attached to the records in the record package.

9.0 ATTACHMENTS

Attachment A - Well Completion Information Form
Attachment B - Borehole/Well Construction Field Data Log
Attachment C - Typical Construction of Overburden Well
Attachment D - Typical Construction of Bedrock Well
Attachment E - Post Placement Around Well
Attachment F - Data Form Completion

Los Alamos National Laboratory Environmental Restoration
Well Completion Information Form

Site Work Plan _____

Technical Area _____ Inclusive Sample Identifier:

Operable Unit _____ _____ to _____

Signature _____ Date _____

Owner _____ Installer _____ Installation Date _____

Filter Pack Length (ft) _____ Well Type Classification _____

Formation of Completion (US/RC)) _____ Well Completion Method _____

Casing Elevation (ft MSL) _____ Zone of Completion _____

Casing Depth (ft) _____ Open/Screen Depth (FTFD)* _____

Casing Diameter (in.) _____ Open/Screen Length (ft) _____

Seal End Depth (FTFD) _____ Open/Screen Area (in^2/ft) _____

Screen Material _____ Flow Relationship _____

Riser Material _____ Cap Material _____

Cap Type _____

UNCONTROLLED

WELL TYPE CLASSIFICATIONS

M - Monitor Well
P - Production Well
T - Test Well
O - Other (specify) _____

FLOW RELATIONSHIP

U - Upgradient
D - Downgradient
C - Cross Gradient
O - Onsite
N - Not known
B - Background

CAP TYPE

LC - Locking
SL - Slip-on
TR - Threaded
NO - None
SC - Screw-on
OT - Other (specify) _____

WELL COMPLETION METHODS

C- Porous Concrete
F - Gravel Pack
H - Horizontal Galley
O - Open End
P - Perforated/Slotted
S - Screen
T - Sand Front
W - Walled
X - Open
O - Other (specify) _____

CAP MATERIALS

CT - Concrete
CR - Copper
FI - Fiberglass
GI - Galvanized Iron
WI - Wrought Iron
SS - Stainless Steel
OM - Other Material
TE - Teflon
PV - PVC
RK - Rock or Stone
ST - Steel
TI - Tile
CS - Costed Steel
WD - Wood
NO - None
OT - Other (specify) _____

ZONES OF CONCERN

A - Artesian
C - Confined
H - Acquitard
G - Aquiclude
M - Multisystem
S - Semi-confined
U - Unconsolidated

* FTFD = feet from datum.

Los Alamos National Laboratory Environmental Restoration
Well Completion Information Form (continued)

Site Work Plan _____

Technical Area _____

Inclusive Sample Identifiers

Operable Unit _____

_____ to _____

Signature _____ Date _____

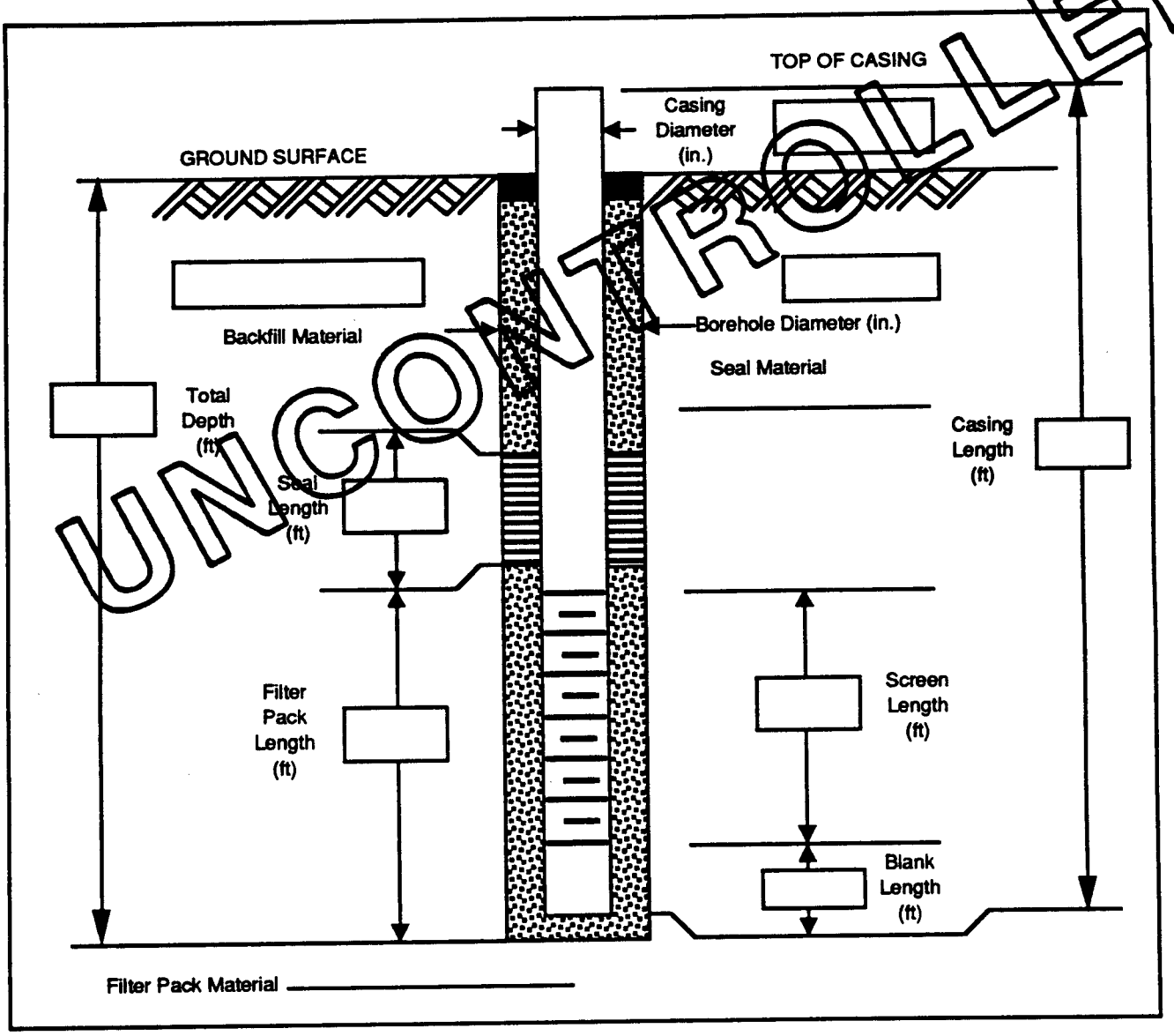

UNCONTROLLED

Comments _____

Los Alamos National Laboratory Environmental Restoration
Monitor Well Construction Field Data Log

Sheet _____ of _____

Site Work Plan _____

Technical Area _____

Inclusive Sample Identifiers

Operable Unit _____

_____ to _____

Signature _____ Date _____

BOREHOLE SUMMARY

BIT TYPE	HOLE DIAMETER (in.)	END[1] DEPTH (ft)	FLUID TYPE

CASING SUMMARY

CASING TYPE	DESCRIPTION	DIAM. (in.)	END[2] DEPTH (ft)

P - Protective S - Screen O - Open N - None

[1] Depth from Ground Surface [2] Depth from Toe of Casing

WELL CONSTRUCTION

TYPE[1] CODE	DESCRIPTION	END[1] DEPTH (ft)

B - Backfill S - Seal F - Filter Pack [1] Depth from Ground Surface

CONSTRUCTION TIME LOG

ACTIVITY	START DATE	START TIME	END TIME
DRILLING			
CASING			
FILTER PACK			
SEAL			
BACKFILL			
DEVELOPMENT			
OTHER			

WELL DEVELOPMENT

COMMENTS:

UNCONTROLLED

TYPICAL CONSTRUCTION OF OVERBURDEN WELL

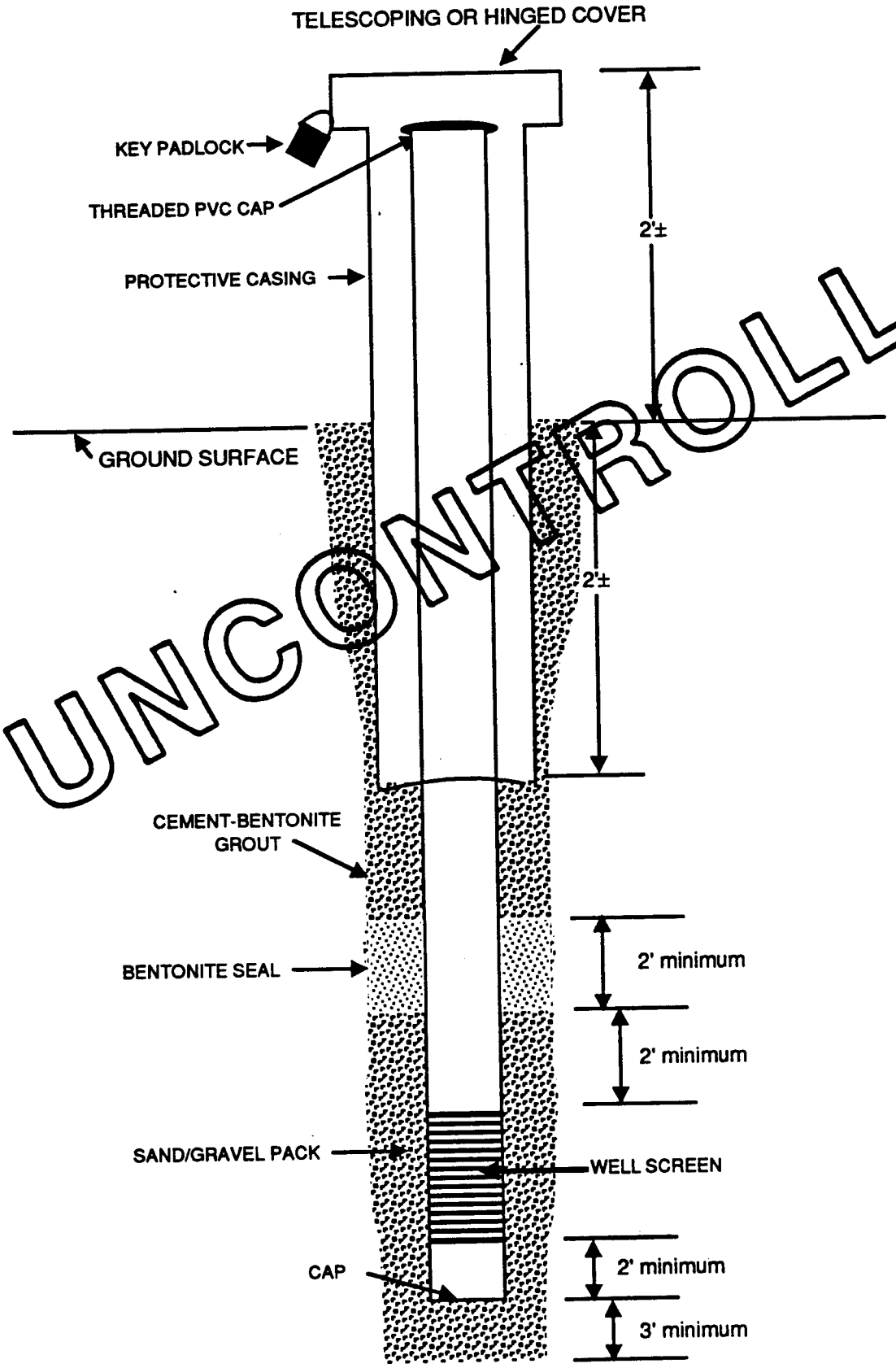

UNCONTROLLED

TYPICAL CONSTRUCTION OF BEDROCK WELL

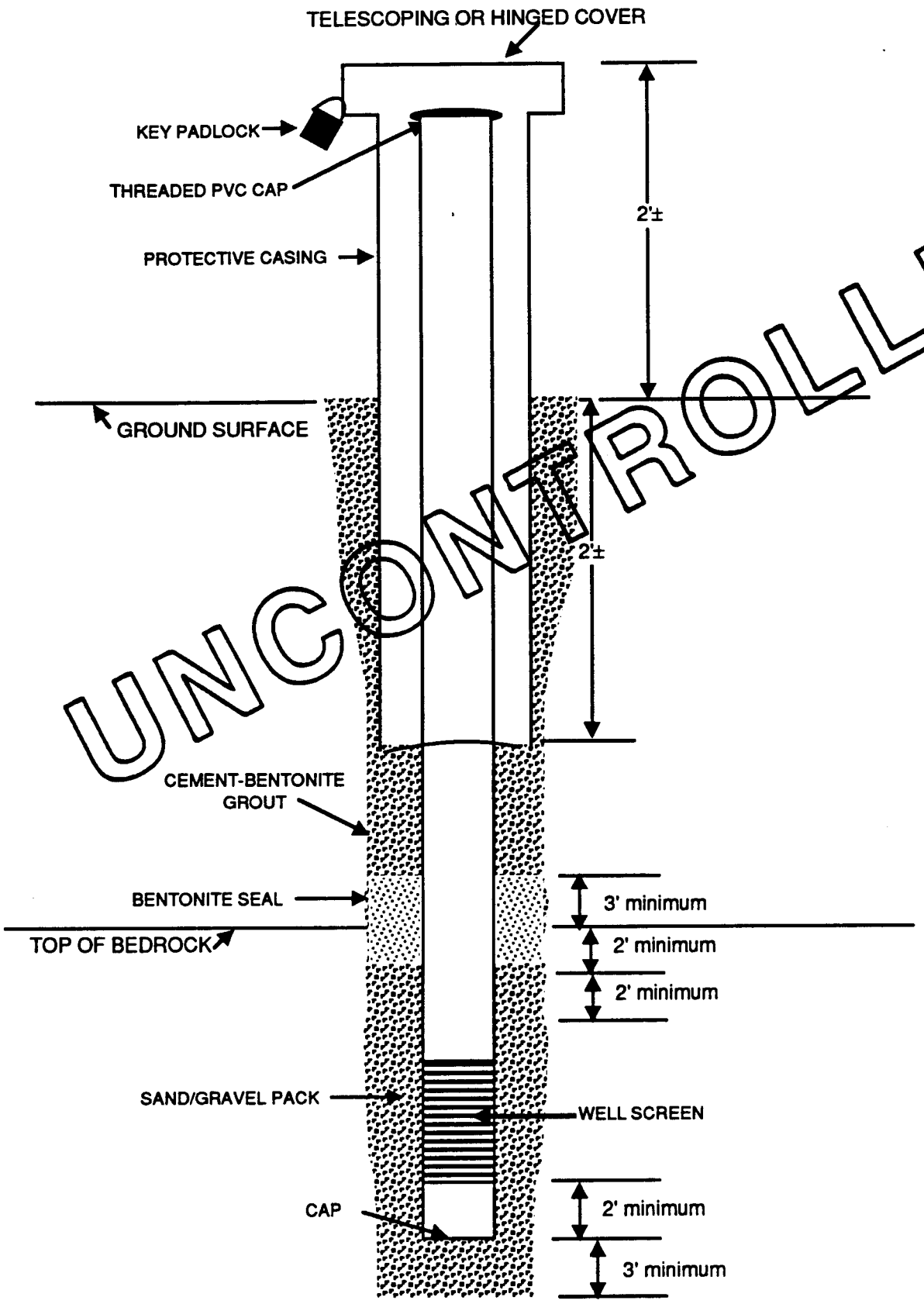

UNCONTROLLED

POST PLACEMENT AROUND WELL

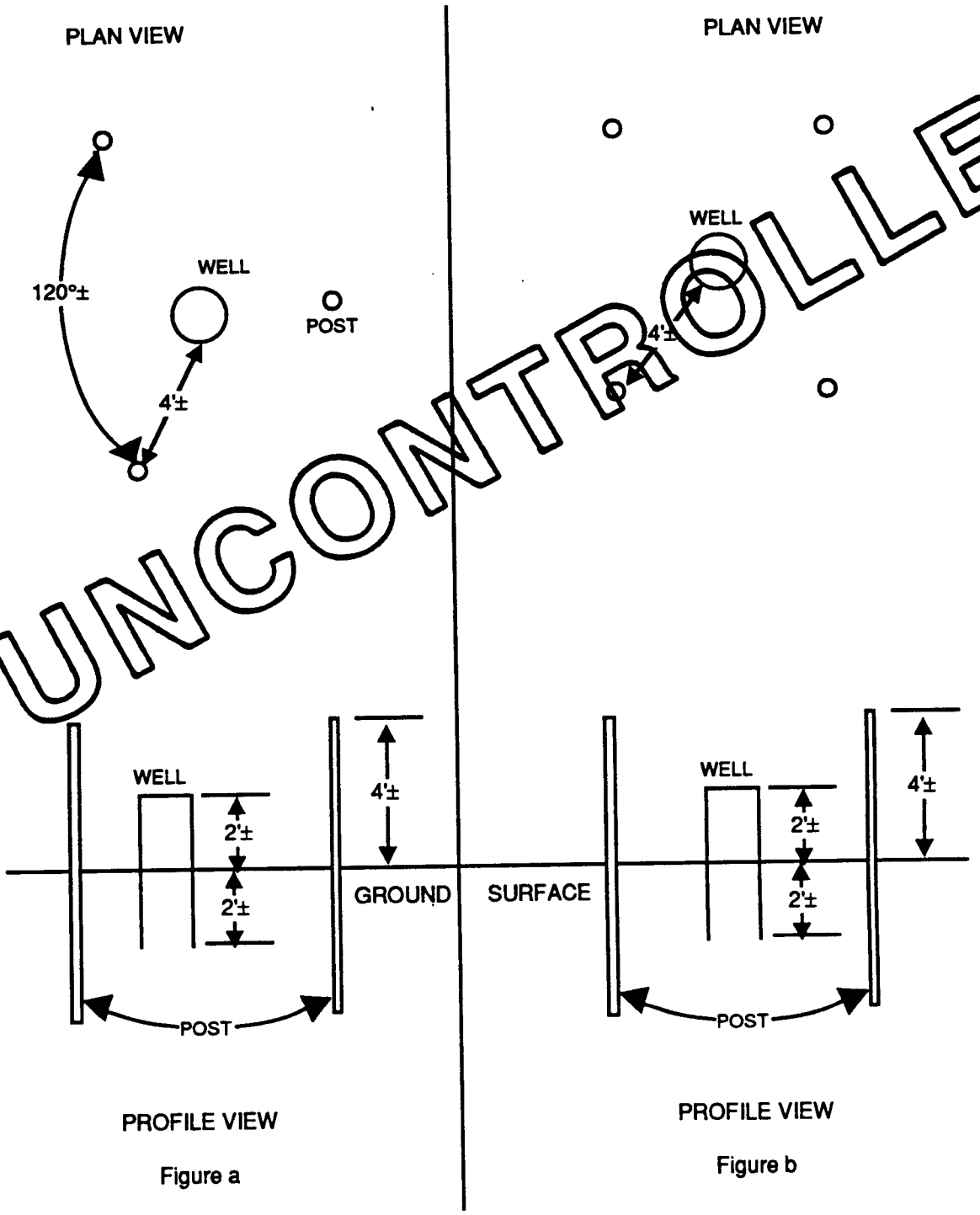

UNCONTROLLED

Los Alamos National Laboratory Environmental Restoration
DATA FORM COMPLETION INSTRUCTIONS

Use a ball point pen with black ink that is not water soluble (not a felt-tip pen). Make an entry in each blank. For entry blanks for which no data are obtained, enter UNK for Unknown, NA for Not Applicable, or ND for Not Done. If any procedure was not performed as prescribed, give the reason for the change or omission on the form. To change an entry, draw a single line through it, add the correct information above it, and initial the change.

DATA FORM COMPLETION

1. Technical Area (TA). Two-digit number indicating the TA in which the drilling sampling is being conducted.

2. Operable Unit (OU). Two-digit number indicating the OU in which the drilling sampling is being conducted.

3. Sample Identification. Five-digit number identifying the sample numbers in the unit area.

4. Log Date and Time. The date and time when the measurement was made, in the following formats: DD-MMM-YY (e.g., 01-JAN-99), and the 24-hour clock time (e.g., 08:37 for 8:37 a.m. and 19:12 for 7:12 p.m.).

5. Sheet Number. Number all the sheets that are used for this sample collection.

6. Weather and Other Comments. Record all other conditions pertinent to the sample collection in this section on the Daily Activity Log Form in SOP-1.01.

WELL COMPLETION INFORMATION FORM (Attachment A)

1. Owner. Identifying the owner of a well that is being installed.

2. Installer Code. Identifying the group, agency, or company responsible for installing and completing a well.

3. Formation of Completion (US/RC). US/RC designation.

4. Well Type Classification. One-character code that designates the type of well being constructed. Valid codes are listed the Well Completion Information form.

5. Well Completion Method. One-character code describing the method used to complete a well or the nature of the openings that allow water to enter a well. Valid codes are listed on the Well Completion Information form.

6. Zone of Completion. Designate the basic water-bearing zones in which a well is completed.

7. Casing Elevation (ft MSL). Top of casing elevation. Casing elevation will be filled out at completion of the field investigation.

8. Casing Length (ft). Distance from the top of casing (in feet and tenths of feet) at which the bottom of

UNCONTROLLED

the casing is placed.

9. Casing Diameter (in.). Diameter of casing installed in inches.

10 Seal End Depth (FTFD). Depth below ground surface (in feet and tenths of feet) at which the bottom of the seal is placed.

11. Screen Material. Describe the type of screen material.

12. Riser Material. Describe the riser material.

13. Open/Screen Depth (FTFD). Depth in feet and tenths of feet from top of casing to top of screen.

14. Open/Screen Length (ft). Total length of the screen in feet and tenths of feet.

15. Open/Screen Area (in^2/ft). Open area of screen in inches squared per foot.

16. Flow Relationship. One-character code designating the flow relationship. Valid codes are listed on the Well Completion Information form.

17. Cap Material. Two-character code describing the cap material. Valid codes are listed on the Well Completion Information form.

18. Cap Type. Describe the type of cap used in the installed well.

BOREHOLE/WELL CONSTRUCTION FIELD DATA LOG (Attachment B)

1. Rig Type. Manufacturer and model of rig.

2. Installer Code. Identifying the group, agency, or company responsible for installing and completing a well.

3. Borehole Summary

   a. Bit Type. The type of bit used.

   b. Hole Diameter (in.). Diameter of borehole in inches.

   c. End Depth (ft). Depth from the ground surface to the bottom of the borehole (in feet and tenths of feet).

   d. Fluid Type. Type of fluid used during the drilling phase of well installation.

4. Casing Summary

   a. Casing Type. One-character code describing the type of casing material used. The codes are listed below.

   b. Description. Describes the casing materials used (for example, Schedule 40 PVC) in well construction.

UNCONTROLLED

c. Diameter (in.). Diameter of casing in inches.

d. End Depth (ft). Depth (in feet and tenths of feet) from the top of the casing to the bottom of the casing.

5. Well Construction

a. Type Code. One-character code describing the material used for filling the annulus space in borehole.

b. Description. Describes the materials used in well construction (bentonite pellets, for example) to fill the annulus space in borehole.

c. End Depth (ft). Depth (from the ground surface) where the materials for well construction are placed in the borehole in feet and tenths of feet.

6. Construction Time Log

a. Start Date. The date construction started.

b. Start Time. The time construction started.

c. End Time. The time when construction ended.

7. Well Development. Any further developments during well construction.

UNCONTROLLED

Los Alamos National Laboratory **Environmental Restoration Program** Standard Operating Procedure	No: LANL-ER-SOP-05.02 Rev: 0

Well Development

UNCONTROLLED

	(Print Name)	(Signature)	(Date)
Preparer:	Sandra E. Wagner	Sandra E. Wagner	3-26-92
Quality Review by:	Michelle Devaurs	Michelle Devaurs	3/26/92
Technical Review by:	Steven K. Stoker		4/2/92
	Sue J. Goff	Sue J. Goff	3/17/92
QPPL Approval:	Robert W Vocke	Robert W Vocke	5/17/92
PM Approval:	Karen L. Warthen	Karen L Warthen	5/18/92

Effective Date: 6-1-92

Monitor Well Development

Table of Contents

1.0 PURPOSE 2

2.0 SCOPE 2
- 2.1 Applicability 2
- 2.2 Training 2

3.0 DEFINITIONS 2

4.0 BACKGROUND AND/OR CAUTIONS 2

5.0 EQUIPMENT 4

6.0 PROCEDURE 4

7.0 REFERENCES 6

8.0 RECORDS 6

9.0 ATTACHMENTS 6

UNCONTROLLED

Monitor Well Development

1.0 PURPOSE

This procedure describes methods for removing foreign materials that may have been introduced into the groundwater, well annulus, or well screen during monitor well installation, and for facilitating hydraulic communication between the screened formation and the monitor well.

2.0 SCOPE

2.1 Applicability

This procedure provides instructions to the field team leader (FTL) and all field team members who are responsible for the development of new monitor wells, or the redevelopment of existing monitor wells.

2.2 Training

The FTL is responsible for monitoring the proper implementation of this procedure. The field team members must document that they have both read and understand this procedure and the procedures in Section 1.0, General Instructions.

UNCONTROLLED

3.0 DEFINITIONS

A. Surging: A well development technique where the surge block is alternately lifted and dropped within the borehole above or adjacent to the screen to create a strong inward and outward movement of water through the well intake.

B. Overpumping: Overpumping involves pumping the well down as low as possible and allowing it to refill.

C. Jetting: Involves lowering a pipe into the well with a series of water jets oriented perpendicular to the pipe. In the shallow alluvial wells at the Laboratory, a flexible hose also can be used for jetting.

D. Rawhiding: Water that is pumped out is allowed to run back down into the well and thus generates a two-directional flow.

E. Nephelometric Turbidity Unit (NTU).

4.0 BACKGROUND AND/OR CAUTIONS

All monitor well installation procedures create a skin, or filter cake, on the borehole wall. During monitor well development, the fine particulate matter is removed from the well or aquifer formation near the screen removing the filter cake. There are four primary

methods for developing monitor wells: overpumping, rawhiding, jetting, and surging (water or air). All of these methods are used to break away the fines (fine particulate matter) from the borehole or well walls. After the fines are broken away, they are remov by either pumping or bailing. This also settles the gravel pack. Refer to the site-specific work plan for more information on the scope of work activities for determining the method to use.

There are three primary factors that influence the development of a monitor well: 1) the type of geologic material, 2) the design and completion of the well and 3) the type of drilling technology employed in the well construction. Because of the small size of weathering products from the volcanic tuff, in some of the alluvial canyon aquifers at Los Alamos, it is virtually impossible to eliminate turbidity while developing the well.

The following discusses the different methods for well development and gives information to help choose a method.

A. Overpumping involves pumping the well down as low as possible and allowing it to refill. The increased velocities, created by refilling, remove fines. This method is usually not very effective, because the water flow is in one direction and at relatively low velocities.

B. Rawhiding is a modification of overpumping. After the water is pumped to the surface, it is either allowed to run back into the well through a foot-valveless pump or poured back down the well. Rawhiding is superior to overpumping because this method generates two-directional flow.

C. Jetting involves lowering a pipe into the well with a series of water jets on the end. The jets point horizontally. The high-pressure water pumped through the jets flushes fines from the formation and breaks the skin caused by drilling. There are two major disadvantages of the jetting method. As with the other methods, fines must occasionally be pumped from the well during development. An external water supply is needed for jetting. External water is introduced into the formation and may alter the hydrochemistry.

D. Surging involves raising and lowering a surge or swab block inside the well. The resulting motion of the water creates a washing effect and removes the borehole skin and fines from the formation. The fines must occasionally be pumped or bailed from the well to prevent sand locking of the surge block. The rubber or viton seals on the surge block are the same diameter as the inside of the well or 1/2 inch smaller if surging is conducted inside the screened interval. A 3-ft stroke is typical.

   Surging can also be implemented with high-pressure air. Air under high pressure is introduced through a high pressure air pipe. Water may be literally blown out of the top of the well, and as the air surging progresses water can be pumped out. However, air surging can introduce air into the formation (altering the hydrochemistry) and become entrained in the screens (reducing flow rates). Air must be filtered to ensure

UNCONTROLLED

its purity. Plastic screens can also be damaged if the air surge is too violent. A specially fabricated air swab can be used to prevent these types of damages.

Surging with a vented (pressure-relief) block (Attachment B) and rawhiding are the preferred methods for well development, although no one method is appropriate for all situations.

Regulatory guidance may be found in the RCRA Technical Enforcement Guidance Document (1986), and the EPA Handbook (EPA160014-891034).

5.0 EQUIPMENT

See Attachment A.

6.0 PROCEDURE

Obtain permission to discharge development water or coordinate efforts to purchase appropriate containment vessels for development. Assemble containers for the temporary water storage produced during well development. The containers must be structurally sound, compatible with anticipated contaminants, and field manageable.

Decontaminate all equipment before developing each well according to SOP-2.07, General Equipment Decontamination.

Perform the development as soon as practical after well installation, but no sooner than 48 hours after grouting is completed. Do not use any dispersing agents, acids, or disinfectants to enhance the development of the well. Do not add water to aid development except under the following special conditions. If problems or unusual conditions are encountered, notify the site geologist as soon as possible.

NOTE: In the installation of some monitor wells in perched alluvial aquifers at Los Alamos, partial development is desirable before emplacing the bentonite seal and cement grout because of settling that commonly occurs.

A. Assemble the necessary equipment on a plastic sheet outside of the splash range.

B. Record pertinent information and on the Well Development section of the Monitor Well Construction Field Data Log. A copy of this form and instructions for completing the form are provided in SOP-5.01, Monitor Well Construction .

C. Open the monitor well and take the air monitoring reading at the top of the casing and in the breathing zone (refer to relevant SOPs).

D. Measure and record depth-to-water and the total depth of the monitor well according to SOP-7.02, Fluid Level Measurement.

UNCONTROLLED

E. Develop the well until the well is free of sediment (to be determined by field team leader) and the appropriate volumes of water have been removed (refer to E.4. below). If this is not possible, consult project documents for guidance. The Hazardous and Solid Waste Amendments Permit (May, 1990) requires attempting to develop unitl the turbidity is <5 NTU. Be sure to record all changes in the Daily Activity Log, SOP-1.01. If the well is not free of sediment after the appropriate volumes of water have been removed, continue until twice the appropriate volume of water has been removed.

1. Note the initial color, clarity, and any obvious odor of the water.

2. Measure and record the initial pH, temperature, and specific conductance of the water.

3. Containerize all water produced by development in contaminated areas or areas suspected of contamination unless specified otherwise in project documents. It may be acceptable to discharge development water in the area surrounding the well; however, if water is containerized, clearly label each container with the location ID, date, and time. Labels should be placed on the lid of the container and covered with clear tape to ensure their permanence. Base the determination of an appropriate disposal method on the first round of analytical results from each well.

4. For those wells where the boring was made without the use of drilling fluid (mud or water), remove five times the standing water volume in the well (well screen and casing plus saturated annulus). Should recharge be so slow that five volumes could not be removed in 1 day or the water is not sediment free after this five-volume removal, the site geologist will select an alternate procedure for verifying that the well is properly developed.

5. Complete the appropriate data entry requirements on the Well Completion Information form to document well development. A copy of the form and instructions for completing it are in SOP-5.01, Monitor Well Installation.

F. Groundwater samples may be collected from the monitor well 30 days after well development is complete, unless specified otherwise in project documents. When samples are collected, ship them to the analytical lab as per SOP-1.03, Handling, Packaging, and Shipping of Samples.

G. Make sure all monitor well locations are properly staked and the location ID is readily visible on the protective casing.

H. Contact the analytical laboratory to ensure that samples arrived safely and instructions for sample analyses are clearly understood.

I. Ensure that all equipment is accounted for and decontaminated (refer to SOP-2.07, General Equipment Decontamination).

UNCONTROLLED

7.0 REFERENCES

The following procedures are directly associated with this procedure and should be reviewed before field operations:

LANL-ER-SOPs in Section 1.0, General Instruction
LANL-ER-SOP-4.01, Drilling Methods and Drill Site Management
LANL-ER-SOP-5.01, Monitor Well Installation
LANL-ER-SOP-7.02, Fluid Level Measurement

Barcelona, M. J., J. P. Gibb, J. A. Helfrich, and E. E. Garske. 1985. "Practical Guide to Groundwater Sampling." U.S. Environmental Protection Agency report EPA/600/2-85/104. U.S. Government Printing Office, Washington, D.C.

Gass, Tyler E., "Monitor Well Development." 1986. Water Well Journal 40, no. 1: 52-55.

Schalla, Ronald, and Robert W. Landick. 1986. "A New Valved and Air-Vented Plunger for Developing Small Diameter Monitor Wells," Ground Water Monitoring Review 6, no. 2: 77-80.

8.0 RECORDS

Completed Monitor Well Construction Field Data Log, SOP 5.01
Completed Daily Drilling Summary Log (SOP 4.01), which will include calibration data, deviations, and any additional comments.

9.0 ATTACHMENTS

Attachment A - Equipment and Supplies Check List
Attachment B - Surge Block Schematics

UNCONTROLLED

Los Alamos National Laboratory Environmental Restoration
WELL DEVELOPMENT EQUIPMENT AND SUPPLIES CHECK LIST

_____ Water level measurement probe

_____ Electrical conductivity meter

_____ Distilled water

_____ Stopwatch

_____ Plastic sheet

_____ Boiler, Pump, Surgeblock or other method-specific equipment

_____ SOP 5.01, Attachment B

_____ SOP 4.01, Attachment A

UNCONTROLLED

Los Alamos National Laboratory Environmental Restoration
SURGE BLOCK SCHEMATICS

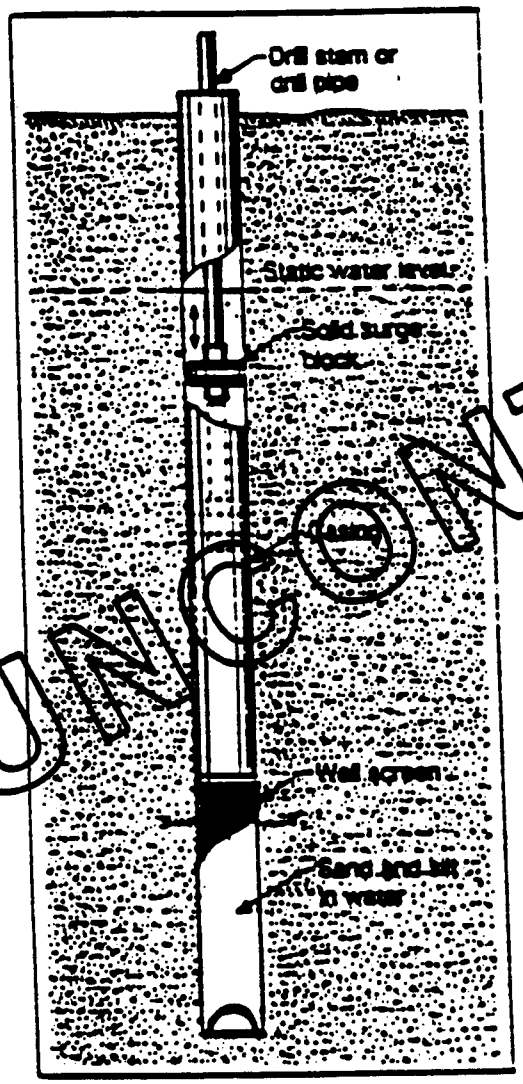

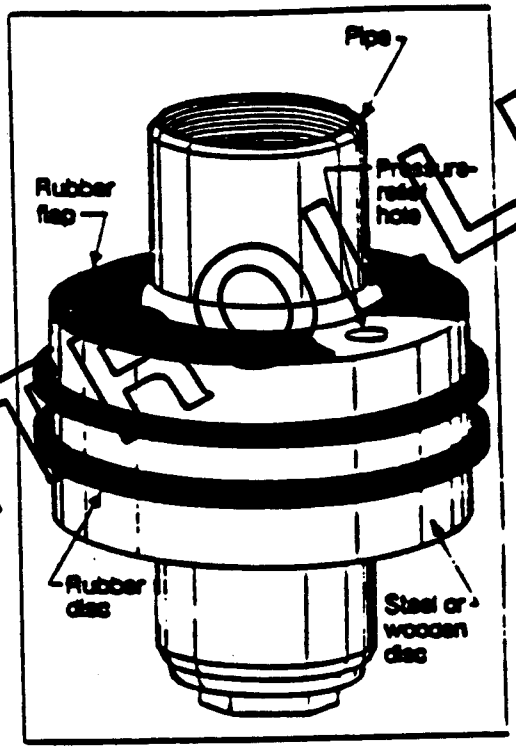

UNCONTROLLED

Los Alamos National Laboratory **Environmental Restoration Program** Standard Operating Procedure	No: LANL-ER-SOP-06.01 Rev: 0

Purging of Wells for Representative Sampling of Ground Water

UNCONTROLLED

	(Print Name)	(Signature)	(Date)
Preparer:	Sandra E. Wagner	Sandra E. Wagner	10-16-91
Quality Review by:	Bruce Gallaher	Bruce Gallaher	9/30/91
Technical Review by:	WALTER K. STOKER	[illegible]	10/2/91
QPPL Approval:	Larry [illegible]	Larry Marrson	10/10/91
PM Approval:	Robert W Vocke	Robert W Vocke	10/14/91

Effective Date: 3-16-92

PURGING OF WELLS FOR REPRESENTATIVE SAMPLING OF GROUNDWATER

1.0 PURPOSE

This procedure describes methods for evacuating stagnant water from a well bore in sufficient quantities so that water samples collected are representative of the formation interval open to the well bore.

2.0 SCOPE

2.1 Applicability

This procedure for the purging of wells is applicable to field team members responsible for collecting groundwater samples for the Environmental Restoration program.

2.2 Training

The field team members are responsible for obtaining representative water samples for analysis. The field team members must document that this procedure has been read and understood along with all of the procedures in Section 1.0, General Instructions.

UNCONTROLLED

3.0 DEFINITIONS

A. Hydrogen-ion activity (pH): The effective concentration (activity) of dissociated hydrogen ions [H+] determines the acidity of an aqueous solution.

B. Redox potential (Eh): Chemical reactions whereby a participating element changes its valence state, losing or gaining orbital electrons. This may be referred to as oxidation-reduction potential.

C. Specific (Electrical) conductance: A measure of the ease with which a conduction current flows through a substance under the influence of an applied electric field. The conductance measurement provides an indication of ion concentration.

4.0 BACKGROUND AND/OR CAUTIONS

Groundwater that remains in the well bore is subject to chemical reactions over time that may significantly alter the composition of the formation water that initially entered the borehole. This water will not be representative of the water in the formation.

Upon exposure to atmospheric pressure and atmospheric oxygen content, the well water oxidation-reduction potential (Eh) and hydrogen-ion activity (pH) are subject to change. Reactions with the casing material may also affect water composition. Solubility may increase, dissolving constituents that under normal conditions would remain in the formation; or solubility

may decrease, precipitating constituents that under normal conditions would migrate through the aquifer in solution.

Ideally, a well should be purged until the water temperature, specific conductivity, and pH stabilize, where it is possible to collect groundwater samples representative of the formation water. However, the well may be purged dry before this state is reached. Samples collected after the well has been purged can then be sent to a laboratory for analysis.

The choice of equipment for well evacuation depends on the well yield, depth to water, casing diameter, the constituents to be analyzed for, and the requirements in the Site Work Plan and Sampling and Analysis Plan.

The decision to use any well evacuation system, whether listed below or not, should be based on what is best for that particular situation. Descriptions of a few well-evacuation systems, their advantages, and their limitations follow:

UNCONTROLLED

4.1 Bailer

With a stainless steel or Teflon™ bailer, water is removed from the well bore by a vessel of known volume. The vessel fills with water, and the unit is retrieved with a line or rope. The bailer purges the well's entire water column by removing standing water at the groundwater surface. Recharge is pulled into the well from the screened interval below.

For shallow, small-diameter wells with low yields, evacuation of the well by bailer is recommended. Bailers are mechanically simple, lightweight and highly portable, constructed in many sizes, and require no external power source. Bailers are easily operated and cleaned and are inexpensive. In addition, considerable time and cost savings are possible by using dedicated equipment to reduce the decontamination task and to limit the possibility of cross-contamination (EPA 1991) The primary limitation of bailers is their limited-volume purging capability, especially in deep wells where purging is labor intensive and time consuming. Bailers may also disturb the water by the pressure changes created by purging. Another disadvantage is that sampling personnel are directly exposed to any contaminants present.

4.2 Reciprocating Piston Submersible Pump

The pump assembly is suspended from the discharge tubing and submerged in the well. Water is transported through the discharge tube to the surface by piston action. A portable air compressor is used to drive the pump.

The reciprocating piston submersible pump is a portable system that can purge wells with water depths up to 500 ft. These pumps develop high pumping rates and can be operated in 2-inch-diameter wells. The pump is self-priming, and the compressed gas (air or nitrogen) that drives the pump does not contact the purged water. The pump is constructed from stainless steel or Teflon™ and can be decontaminated easily.

4.3 Electric Submersible Pump

The pump assembly is suspended from the discharge tubing and submerged in the well. The turbine in the pump bowl creates sufficient pressure to force water up the discharge pipe. Usually, a portable generator is required for power to the electric pump (unless electricity is available) and a truck-mounted winch may be required to move and lower the pump into the well.

The submersible pump may be used for purging both shallow, small-diameter wells and deep, large-diameter wells requiring large rates of discharge. Manufacturers offer small diameter stainless steel and Teflon™ constructed pumps capable of efficient purging at significant depths. The pump may be portable and self-contained.

Disadvantages of the submersible pump are (1) the pump can be difficult to decontaminate and transport along with auxiliary equipment; (2) the pump motor may be damaged by dry pumping, and the gears may be damaged by water containing high levels of suspended sediment; (3) large-capacity pumps are expensive; and (4) with negative displacement, pumps can significantly aerate the sample, thus changing the in situ chemistry and stripping low molecular weight volatiles. Careful monitoring during operation is needed to obtain optimum pump performance and to preclude the possibility of equipment damage.

Site workers preparing for field operations should read and understand the procedures outlined in LANL-ER-SOPs 2.0, Health and Safety in the Field. In addition, site workers should refer to site-specific Operable Unit Health and Safety plans for the particular health and safety equipment to be used.

UNCONTROLLED

5.0 EQUIPMENT

Equipment required for this procedure is listed in Attachment A.

6.0 PROCEDURE

The following procedure for purging a well is applicable regardless of which pump has been selected to best meet the constraints of the job. Procedural variations or additions specific to the type of pump used directly follow the general instructions.

A. Make provisions for proper storage and disposal of the extracted well water, as described in SOP-01.06, Management of RFI-General Wastes, and coordinate sampling effort with the Sample Coordination Facility.

B. Assemble the equipment and supplies listed in Attachment A.

C. Verify that the equipment and meters are in good working order (obtain and review the manufacturer's operations, calibration, and instructions for the pH and conductivity meters to be used.) Record all calibration information on the Daily Activity Log in SOP-01.04.

D. In the field, locate the monitor wells to be sampled, and the appropriate staging and decontamination areas. If the amount of contamination differs significantly between wells, plan to purge and sample the least contaminated wells first.

E. Secure the work zone. Preclude passerby traffic through the work zone with barriers or cones. Place new plastic sheeting on the ground around the well in case something is dropped or must be placed on the ground.

F. Decontaminate the equipment that will come in contact with the sample water before sampling the first well, and between samples, in accordance with SOP-02.07, General Equipment Decontamination. It is preferable that new rope be used for bailers.

G. Measure and record the depth to water in the well, if possible, from the reference point established for that well, in accordance with SOP-07.02, Fluid Level Measurement.

H. To determine the well bore volume use the following relationship:

$$V(\text{gallons}) = \frac{(d^2)\pi}{4}(h_2 - h_1) \times 7.48$$

Where V = the volume in gallons
π = the constant 3.1416
d = the well diameter, in feet
h_2 = the well's total depth, in feet
h_1 = the depth to water, in feet

Determine the height of the water column standing in the well by subtracting depth to water, in feet, from the total well depth. Measure the well's diameter, in feet. Calculate the volume in gallons and enter these data on the Water Quality Sampling Record found in SOP-06.02.

I. A minimum of three casing volumes must be extracted before sampling. If the well is pumped dry before sampling, refer to the Sampling Plan for guidance.

J. Set the intake in the well at the approximate midpoint of the screened interval, if applicable or possible, and begin extraction.

K. If required by the site safety officer or the Site Health and Safety Plan (SHSP), monitor the air above the wellhead and the breathing zone for explosion and fire potential and for toxicity, using SHSP approved equipment.

UNCONTROLLED

L. Record the discharge rate (usually by calibrated bucket and stopwatch) and the time periodically, and calculate and tabulate the gallons discharged since the start of pumping. Also measure and record the temperature and specific conductance of the well fluid, as described in SOP-06.02, Field Analytical Measurements on Groundwater Samples.

M. When the temperature and specific conductance have begun to stabilize, also begin to monitor the pH. If a flow-through cell is used, all pH readings should be made while the groundwater flow through the cell is halted, to eliminate streaming potentials.

N. When a minimum of three times the casing volume of fluid has been extracted, and field pH, specific conductance, and temperature have stabilized, the well is ready to sample. If these parameters do not stabilize, refer to the Site-Specific Work Plan and Sampling Plan for guidance.

O. Record the final, stable readings of pH, specific conductance, and temperature on the field parameter section of the form.

P. After shutting down the pump, measure and record the water-level drawdown in the well. These data may provide limited information about saturated zone hydraulics.

Q. When sampling is completed, or at the end of the day, carefully clean the outside of the meters with a damp disposable towel to remove any visible dirt. Return them to a secure area and check the battery charge.

R. Decontaminate the pump assembly and other pieces of equipment that contacted the well fluid in accordance with SOP-02.07.

S. Restore the site to its original presampled condition.

T. Store the extracted groundwater as directed in the Site Work Plan and Sampling and Analysis Plan until its composition and proper disposal can be determined.

UNCONTROLLED

7.0 REFERENCES

The following procedures are directly associated with this procedure and should be reviewed before field operations:

LANL-ER-SOPs in Section 1.0, General Instructions.
LANL-ER-SOPs in Section 2.0, Health and Safety in the Field.
LANL-ER-SOP-06.02, Field Analytical Measurements of Groundwater Samples.
LANL-ER-SOP-07.02, Fluid Level Measurement.

Barcelona, M. J., J. P. Gibb, J. A. Helfrich, and E. E. Garske. 1985. "Practical Guide to Groundwater Sampling." U.S. Environmental Protection Agency report EPA/600/2-85/104. U.S. Government Printing Office, Washington, D.C.

EPA, 1986. "RCRA Ground Water Monitoring Technical Enforcement Guidance Document." OSWER, Washington, D.C.

EPA, Region IV, 1991. "Environmental Compliance Branch Standard Operating Procedures and Quality Assurance Manual." Environmental Services Division, Athens, GA.

Korte, N., and P. Kearl. 1984. "Procedures for the Collection and Preservation of Groundwater and Surface Water Samples and for the Installation of Monitoring Wells." U.S. Department of Energy, Grand Junction, CO.

Morrison, R.D. 1983. "Groundwater Monitoring Technology, Procedures, Equipment and Applications." TIMCO Manufacturing, Inc., 85-90, Evanston, IL.

UNCONTROLLED

8.0 RECORDS

The following records are generated as a result of this procedure:

A. Daily Activity Logs which may include the following:

- Instrumentation and calibration information
- Order of sampling of the wells, and any comments regarding relative levels of contaminants
- Determination of casing volumes
- Health and safety monitoring
- Well discharge rate.

B. Water Quality Sampling Record, as appropriate

C. Water Quality Stabilization Record, as appropriate

D. Fluid Level Measurement Record, as appropriate

E. Completed Chain-of-Custody/Request for Analysis Form.

9.0 ATTACHMENT

A. Equipment and Supplies Checklist for Purging of Wells for Representative Sampling of Groundwater

EQUIPMENT AND SUPPLIES CHECKLIST FOR PURGING OF WELLS FOR REPRESENTATIVE SAMPLING OF GROUNDWATER

_____ Purging pump or bailer

_____ Water level measurement device

_____ Calculator

_____ Thermometer

_____ Conductivity meter (and extra cup)

_____ pH meter (and extra probe)

_____ Air compressor or bottled nitrogen (as needed)

_____ Standard reference solutions for calibrating specific conductance and pH meters

_____ Portable generator, if needed

_____ 55-gallon drums or other water storage containers

_____ Flow measuring equipment

_____ Daily Activity Log

_____ Water Quality Sampling Record forms

_____ Water Quality Stabilization Record forms

_____ Fluid Level Measurement Record forms

_____ Chain-of-Custody/Request for Analysis forms

_____ Sample Collection Logs

_____ Variance Log

_____ Custody Seals

_____ Unique Sample Stickers

_____ Sample Labels

UNCONTROLLED

Los Alamos National Laboratory **Environmental Restoration Program** Standard Operating Procedure	No: LANL-ER-SOP-06.02 Rev: 0

Field Analytical Measurements of Groundwater Samples

UNCONTROLLED

	(Print Name)	(Signature)	(Date)
Preparer:	Sandra E. Wagner	Sandra E. Wagner	10-24-91
Quality Review by:	Bruce Gallaher	Bruce Gallaher	9/30/91
Technical Review by:	Philip Fresquez	Philip M. Fresquez	10/3/91
GPPL Approval:	Larry Maassen	Larry Maassen	10/24/91
PM Approval:	Robert W Vocke	Robert W Vocke	10/24/91

Effective Date: 3-16-92

TABLE OF CONTENTS

1.0 PURPOSE 2
2.0 SCOPE 2
2.1 Applicability 2
2.2 Training 2
3.0 DEFINITIONS 2
4.0 BACKGROUND AND/OR CAUTIONS 3
5.0 EQUIPMENT 3
6.0 PROCEDURE 3
6.1 Field Parameter Measurement 3
6.1.1 Temperature 4
6.1.2 Specific (Electrical) Conductance 4
6.1.3 pH 4
6.1.4 Dissolved Oxygen 5
6.1.5 Turbidity 5
6.2 Documentation 5
6.3 Postoperation Activities 5
7.0 REFERENCES 6
8.0 RECORDS 7
9.0 ATTACHMENTS 7
A. Equipment and Supplies Checklist 8
B. Water Quality Sampling Record 9
C. Water Quality Stabilization Record 11
D. Data Form Completion 12

UNCONTROLLED

FIELD ANALYTICAL MEASUREMENTS OF GROUNDWATER SAMPLES

1.0 PURPOSE

This procedure describes acceptable methods for obtaining field measurements of the temperature, specific conductance, pH, alkalinity, turbidity, and dissolved oxygen of groundwater that closely represent the conditions that exist in the aquifer for the Environmental Restoration (ER) program.

2.0 SCOPE

2.1 Applicability

This procedure is applicable for field analytical measurements on groundwater samples for the ER program.

2.2 Training

The field team leader is responsible for ensuring that field team members collecting samples are practiced in the operation and calibration of the field analytical equipment. In addition all field team members using this procedure must document that they have read and understand this procedure, and the procedures in Section 1.0, General Instructions.

3.0 DEFINITIONS

A. Alkalinity: Various soluble mineral salts found in natural water and arid soils having a pH greater than 7. In water analysis it represents the carbonates, lucarbonates, bicarbonates, hydroxides, and occasionally the horates, chlorates, silicates, and phosphates.

B. pH: A measure of the acidity or alkalinity of a solution, numerically equal to 7 for neutral solutions, increasing with alkalinity and decreasing as acidity increases. Originally stood for the words "potential of hydrogen."

C. Specific conductance: A measure of the ease with which an applied electric field can flow through a material. It is the reciprocal of resistivity and is measured in micromhos per centimeter at 25°C.

D. Dissolved oxygen: The amount of oxygen dissolved in water, in parts per million (ppm) by weight, or in milligrams per liter (mg/l).

E. Turbidity (nephelometric): A measure of the intensity of light scattered by sample particulates relative to a standard reference suspension. The range of water turbidity is measured from 0 to 40 Nephelometric Turbidity Units (NTU). Five NTU is the sample acceptance criteria (EPA 1986).

UNCONTROLLED

4.0 BACKGROUND AND/OR CAUTIONS

Field analytical parameters are normally measured along with well purging and groundwater sampling activities. Measurements of temperature, turbidity, specific conductance, and pH, done in advance of sampling, are also used as the final indication that a well is purged of stagnant water. The alkalinity and dissolved oxygen of groundwater are highly dependent on the availability and partial pressures of carbon dioxide and oxygen in the underground environment. Preservation of samples selected for turbidity analyses is not practical. Because the value of these parameters begins to change with prolonged exposure to atmospheric conditions, well head measurements generally yield the most accurate representation of in situ values.

Some properties or constituents in groundwater begin to change within minutes to hours of sample collection. If dependable results are required to more accurately characterize the in situ chemical properties of groundwater, immediate analysis may be advisable. The development of sophisticated and reliable portable field equipment now makes the analysis for many unstable constituents or properties possible at the collection site.

Site workers preparing for field operations should read and understand the procedures outlined in LANL-ER-SOPs, Section 2.0, Health and Safety in the Field. In addition, site workers should refer to site-specific Operable Unit Health and Safety plans for the particular health and safety equipment to be used.

UNCONTROLLED

5.0 EQUIPMENT

Equipment to implement this procedure is listed in Attachment A.

6.0 PROCEDURE

A. For quality control, field determinations should be repeated, from the beginning, on the same samples that are selected for lab replicates. Samples to be replicated may be selected on the basis of sample availability, but generally constitute 10 to 20% of the samples collected (SOP-01.05, Field Quality Control Samples, and the Sampling and Analysis Plan for details).

6.1 Field Parameter Measurement

A. Review SOP-06.01, Purging of Wells for Representative Sampling of Groundwater, SOP-01.04, Sample Control and Field Documentation, and SOP-01.06, Management of RFI-Generated Waste.

B. Assemble the equipment and supplies listed in Attachment A and the manufacturer's operations manuals.

C. Verify that the equipment/meters are in good working order. (Review the manufacturer's instruction manuals for operation and calibration of the instruments to be used in the field.)

D. Refer to the site-specific documentation to locate the wells to be sampled and the appropriate staging and decontamination areas. If the amount of known or suspected contamination differs significantly between wells, plan to sample the least contaminated first.

E. Coordinate all sampling efforts with the Sample Coordination Facility.

The remainder of this section contains individual descriptions of field analytical methods for measuring temperature, specific conductance, pH, dissolved oxygen, and turbidity. Refer to the site-specific documents for details about the number, types, and locations of measurements to be made.

UNCONTROLLED

6.1.1 Temperature

A. Obtain an immersion thermometer or thermocouple.

B. Ascertain that the field instrument has been calibrated to within ± 1.0°C against a thermometer calibrated to National Institute of Standards and Technology. (The field instrument is compared to the reference thermometer at two different temperatures that bracket the temperature range normally measured in the field. Calibration must be done at least annually, and whenever the instrument is suspected of misuse, damage, or erratic or erroneous readings.)

C. Read the temperature immediately upon stabilization, and record on the Water Quality Sampling Record (Attachment B).

6.1.2 Specific (Electrical) Conductance

A. Obtain a specific-conductance meter that is battery operated, equipped with temperature compensator, and reads directly in micromhos/cm at 25°C. This meter is recommended to save time in converting resistance values to specific conductance and to ensure that the value is read in the field. Record reading on the Water Quality Sampling Record.

B. For all meters, follow the instructions in the manufacturer's operations manual for use and calibration of the equipment.

6.1.3 pH

A. Obtain a pH meter to be used for field measurements and the appropriate operation manual.

B. Operate the meter in accordance with the manufacturer's instructions. For purposes of this procedure, record pH value to the nearest 0.02 unit, on the Water Quality Sampling Record.

6.1.4 Dissolved Oxygen

A. Dissolved oxygen may be measured by several methods (dissolved oxygen meter or colorimeter).

B. Follow instructions in the operation manual supplied with the instrument, and record the final value of dissolved oxygen concentration to the nearest 0.1 mg/l on the Water Quality Sampling Record.

6.1.5 Turbidity

A. Obtain a turbidimeter (Hach Model 2100, 2100A or acceptable equivalents) capable of turbidity measurements (Nephelometric) in conformance with EPA's Method 180.1 (EPA 1983).

B. Operate the equipment in conformance with the manufacturer's instructions and EPA's Method 180.1.

C. Record the results of turbidity testing in the "comments" sections of the Water Quality Sampling Record and the Groundwater Stablization Record.

UNCONTROLLED

6.2 Documentation

A. Obtain a sufficient number of the appropriate ER program field record and instrument test forms (refer to Attachments B through E) to record all measurements. Also refer to SOP-06.13 and SOP-01.04.

B. Additional comments may be provided on the Daily Activity Log, refer to SOP-01.04.

C. Refer to Attachment F, Data Form Completion, for detailed documentation instructions for most forms.

6.3 Postoperation Activities

A. When the work is completed, or at the end of the day, carefully clean the outside of the sampling instruments with a damp disposable towel to remove any visible dirt. Clean and decontaminate equipment per SOP-02.07, and replenish supplies.

B. Restore the site to the presampling conditions and fill open sampling holes as described in the site-specific documents.

C. Prepare samples and transport according to SOP-01.04, Sample Control and Field Documentation.

D. Return equipment to the equipment manager. Report malfunction, performance deviations, or damage.

7.0 REFERENCES

The following procedures directly relate to this procedure and should be reviewed before field operations:

LANL-ER-SOPs in Section 1.0, General Instructions.
LANL-ER-SOPs in Section 2.0, Health and Safety in the Field.
LANL-ER-SOP-06.01, Purging of Wells for Representative Sampling of Groundwater.
LANL-ER-SOP-06.13, Surface Water Sampling.

Bates, R. L. and J. J. Jackson. 1984. "Dictionary of Geological Terms," Third Edition prepared by the American Geological Institute, Alexandria, VA.

Driscol F., 1986. "Groundwater and Wells," Second Edition. Johnson Division, St. Paul, MN.

EPA. 1983. "Methods for Chemical Analysis of Water and Wastes." U.S. Environmental Protection Agency document EPA/600/4-79-020. U.S. Government Printing Office, Washington, D.C.

EPA. 1986. RCRA Ground Water Monitoring Technical Enforcement Guidance Document. OSWER, U.S. Government Printing Office, Washington, D.C.

Korte, N., and P. Kearl. 1984. "Procedures for the Collection and Preservation of Groundwater and Surface Water Samples and for the Installation of Monitoring Wells." DOE, Grand Junction, CO.

U.S. Geological Survey. 1977. 11 Chapter 2 - "Groundwater" prepared January 1980 in National Handbook of Recommended Methods for Water Data Acquisition. Office of Water Data Coordination, U.S. Geological Survey, U.S. Government Printing Office: 1981-341-614/131, Washington, D.C.

UNCONTROLLED

8.0 RECORDS

A. Completed Water Quality Sampling Record

B. Completed Water Quality Stabilization Record

C. Completed Daily Activity Log which may include any additional comments or deviations from the procedure.

9.0 ATTACHMENTS

A. Equipment and Supplies Checklist for Field Analytical Measurements of Groundwater Samples

B. Water Quality Sampling Record

C. Water Quality Stabilization Record

D. Data Form Completion

UNCONTROLLED

EQUIPMENT AND SUPPLIES CHECKLIST FOR FIELD ANALYTICAL MEASUREMENTS OF GROUNDWATER SAMPLES

UNCONTROLLED

_____ For Temperature

Calibrated, partial-immersion thermometer graduated in 0.5°C or 1.0° F within the range of 0-50°C

or

A thermocouple calibrated within ± 0.5°C greater than the range 0-50°C or expected use.

Manufacturer's operation manual.

_____ For Specific Conductance

Specfic conductance meter and the manufacturer's operation manual.

_____ For pH

pH meter and manufacturer's operations manual.

Standard pH solution.

_____ For Dissolved Oxygen

Colorimeter and manufacturer's operation manual,

or

Oxygen meter with sensor and manufacturer's operation manual.

_____ For Turbidity

Equipment specified in EPA's "Methods for Chemical Analyses of Water and Wastes," Method 180.1 with a range of 0 to 40 Nephelometric Turbidity Units.

_____ Forms

Water Quality Sampling Record

Water Quality Stabilization Record

Daily Activity Log

EQUIPMENT AND SUPPLIES CHECKLIST FOR FIELD ANALYTICAL MEASUREMENTS OF GROUNDWATER SAMPLES (Continued)

Chain-of-Custody/Request for Analysis Forms

Sample Collection Logs

Custody Seals

Unique Sample Stickers

Sample Labels

UNCONTROLLED

WATER QUALITY SAMPLING RECORD

LOS ALAMOS NATIONAL LABORATORY
ENVIRONMENTAL RESTORATION
WATER QUALITY SAMPLING RECORD

Date: _____ Sheet _____ of _____

Technical Area _____ Operable Unit _____

Site Work Plan: _____

Signature: _____

AFFIX FIRST SAMPLE STICKER HERE

AFFIX LAST SAMPLE STICKER HERE

Well Number: _____

_____ Surface

_____ Groundwater

Lot Control No. _____

Sample Type _____

Sampling Period: Start _____ Complete _____

Sampling Method _____ Date Sent _____

COMMENTS: _____

*Initial Groundwater Depth _____ *Sample Depth _____

PARAMETER MEASUREMENTS:

Potential of Hydrogen-Ion Activity	pH	S.U.	_____
Specific Conductance	Ec	umhos/cm	_____
Temperature	Tmp	°C	_____
Dissolved Oxygen	DO	mg/l	_____

* Groundwater samples only

SAMPLE TYPES

D - Duplicate
T - Trip
F - Field
R - Replicate
K - Known
A - Acid Blank

SAMPLING METHODS:

D - Depth Integrated
B - Bailer
C - Composite
G - Grab
AL - Air Lift Sampler
BP - Bladder Pump
PP - Peristaltic Pump
SL - Suction Lift Pump
SP - Submersible Pump
O - Other

☐ CHECK HERE IF CONTINUED ON BACK OF THIS SHEET

ER-SOP-06.02, R0 5/91

UNCONTROLLED
FOR EXAMPLE
CONTACT THE PROGRAM OFFICE FOR MASTER FORMS

WATER QUALITY SAMPLING RECORD, Continued

LOS ALAMOS NATIONAL LABORATORY
ENVIRONMENTAL RESTORATION
WATER QUALITY SAMPLING RECORD, Continued

Date: _____ Sheet _____ of _____

Technical Area _____ Operable Unit _____

Site Work Plan: _____

Signature: _____

AFFIX FIRST SAMPLE STICKER HERE

AFFIX LAST SAMPLE STICKER HERE

BORE VOL CALCULATION (GAL)*

$$\frac{d^2 \pi}{4} (h_1 - h_2) \times 7.48$$

*Depth of Well (h_2) (Ft) _____

Depth-to-water (h_1) (Ft) _____

Well Diameter (Ft) _____

One Bore volume (Gal) _____

Screened Interval (Ft) _____

Instrument(s) Used _____

_____

*Groundwater Only

SAMPLING INFORMATION

Withdrawal Devices _____

Filter Size _____

Thermometer ID _____

Ec Meter ID _____

pH Meter ID _____

Pump ID _____

CALIBRATION INFORMATION

Date/Time of Last Ec Calibration _____ Lot No. _____ Date _____

Time of pH Calibration _____

For Standard Solution pH 7, Instrument Reading _____ pH solution Lot No. _____ Date _____

For Standard Solution pH 4, Instrument Reading _____ pH solution Lot No. _____ Date _____

For Standard Solution pH 10, Instrument Reading _____ pH solution Lot No. _____ Date _____

SHIPPING INFORMATION

Lab(s) Shipped To: _____ _____ _____

Date(s) Shipped: _____ _____ _____

Method of Shipment: _____ _____ _____

COMMENTS: _____

☐ CHECK HERE IF CONTINUED ON BACK OF THIS SHEET

ER-SOP-06.02, R0 5/91

UNCONTROLLED
CONTACT THE PROGRAM OFFICE FOR MASTER FORMS
EXAMPLE

WATER QUALITY STABILIZATION RECORD

LOS ALAMOS NATIONAL LABORATORY
ENVIRONMENTAL RESTORATION
WATER QUALITY STABILIZATION RECORD

Date: _____ Sheet _____ of _____

Technical Area _____ Operable Unit _____

Site Work Plan: _____

Signature: _____

TIME	TOTAL VOLUME WITHDRAWN		Ph	Ec (umhos/cm)	TEMP (°C)	COMMENTS
	(Gals)	(Bore Volume)				

☐ CHECK HERE IF CONTINUED ON BACK OF THIS SHEET

ER-SOP-06.02, R0 5/91

UNCONTROLLED
CONTACT THE PROGRAM OFFICE FOR MASTER FORMS

DATA FORM COMPLETION

Use an indelible dark ink pen. Make an entry in each blank. For entry blanks for which no data are obtained, enter UNK for Unknown, NA for Not Applicable, or ND for Not Done. To change an entry, draw a single line through it, add the correct information above it, and date and initial the change. For all forms, complete the following information:

1. Technical Area (TA). Two-digit number indicating the TA in which the sampling is being done or sample is being studied.

2. Operable Unit. Four-digit number indicating the operable unit in which the sampling is being done or sample is being studied.

3. Sample Identification:

   - If the Daily Activity Log addresses only one sample, attach a sticker from the batch of stickers that match the sticker number on the sample, and line through the box labeled "Attach Last Sample Number Here."

   - If the Daily Activity Log addresses a sequential number of samples, put the first matching sample sticker in the box marked "First" and put the last matching sample sticker in the box marked "Last."

   - If sample identifiers used are not sequential, be sure to affix the lowest sample sticker number in the left box, record the remaining sample identifiers on the form and Daily Activity Log, and line through the "Last" box.

4. Log Date and Time. The date and time when the measurement was made, in the following formats: DD-MMM-YY (e.g., 01-JAN-88) and the 24-hour clock time (e.g., 0837 for 8:37 a.m. and 1912 for 7:12 p.m.).

5. Sheet Number. Number all the sheets that are used for this activity, by day or by some practical unit.

6. Weather and Other Comments. Record all other conditions pertinent to the sample collection in this section on the Daily Activity Log in SOP-01.04.

For the specific following forms, complete the additional information as indicated below.

WATER QUALITY SAMPLING RECORD

1. Lot Control Number. A two-digit number denoting that a given set of samples should be analyzed as a lot or group. (Normally, this number is not assigned by persons in the field collecting surface water samples.)

UNCONTROLLED

2. Sample Type. A one-character code distinguishing the type of sample collected. This classification permits the analysis of data for specific groups of samples. The codes are identified on the form.

3. Sampling Method. A two-character code identifying the method used to collect a soil, rock, or water sample. The codes are identified on the form.

4. Well Number. Record number of well sampled.

5. Comments. Includes preservation method, acidified or nonacidified, type of acid (if acid was used to preserve water sample), and any additional information.

6. Parameter Measurements. The measurements listed below are recorded at the time the sample is collected.

   a. Hydrogen-Ion Activity--the pH units at the time of collection.

   b. Specific Conductance--The specific conductance of the water sample in micromhos/cm in (µmhos/cm) at 25°C at the time of collection.

   c. Temperature--The temperature of the water sample in degrees Celsius (°C) at the time of collection.

   d. Dissolved Oxygen--The dissolved oxygen content of the water sample in mg/l at the time of collection.

7. Withdrawal Device. The sampling device used to collect the surface water sample.

8. Filter Size. Size of filter in use.

9. Thermometer ID. The identification of the thermometer used.

10. Conductivity Meter ID. The control number and manufacturer of the meter used to measure the specific conductance of samples or calibration solutions.

11. pH Meter ID. The control number and manufacturer of the meter used to measure the pH of the samples.

12. Pump ID. Identification of the pump in use.

13. Alkalinity Kit ID. Identification and model or serial number of the alkalinity kit used.

14. Depth of well. Record depth in feet for groundwater sampling.

UNCONTROLLED

15. Depth to water. Record depth in feet for groundwater sampling.

16. Well Diameter. Record diameter in feet for groundwater sampling.

17. One Bore Volume. Calculate volume in gallons using the equation on the form.

18. Screened Interval. Record in feet.

19. For a well, include information on the left side of the continuation page.

20. Instruments Used. The types of instruments used to obtain measurements, monitor air quality, or facilitate the collection of a sample or test performance.

21. Calibration Information. After performing the alkalinity titration test and immediately before sample collection, record the following information:

    a. Date/Time of Last Ec Calibration. Date and time that the specific conductivity meter was last calibrated.

    b. Time of pH Calibration. Time the pH meter was calibrated.

    c. Standard Solution pH Readings. The pH readings are to be recorded as the probe is immersed in standard solutions of pH 7.0, 4.0 and 10.0. Include expiration dates and lot numbers of the standard solutions.

22. Shipping Information. Information that includes the date, method, laboratory where the samples were shipped, and a comments section.

23. Comments. Add results of turbidity testing.

UNCONTROLLED

WATER QUALITY STABILIZATION RECORD (Attachment C)

This form contains data that are collected during well purging. These are described below.

1. Minimum purge volume. Total volume of well water to be extracted, at a minimum, is three to five well volumes before sampling may begin.

2. Time. The time when a field measurement of purged water was performed in the format HH:MM.

3. Total Volume Withdrawn. Using a bucket or flowmeter, the field sampler will note the number of gallons of water purged from the well at the time that a field measurement is taken. This entry is cumulative and represents the total volume of water purged before sampling may begin. A second column is provided so that the field sampler can equate

gallons as bore volumes purged (see equation on page 2 of the Water Quality Sampling Record).

4. pH. The pH readings of water sampled during the purging process.

5. Ec. The specific conductance readings of water sampled during the purging process in µmhos/cm.

6. Temp (°C). The temperature of the water sampled during the purging process.

7. Comments. Includes preservation method, acidified or nonacidified, type of acid (if acid was used to preserve water sample), and any additional information. Add results of turbidity testing.

UNCONTROLLED

Los Alamos National Laboratory **Environmental Restoration Program** Standard Operating Procedure	No: LANL-ER-SOP-06.03 Rev: 0

Sampling for Volatile Organics

UNCONTROLLED

	(Print Name)	(Signature)	(Date)
Preparer:	Sandra E. Wagner	Sandra E. Wagner	10-16-91
Quality Review by:	Phil Fresquez	Philip B. Fresquez	10/23/91
Technical Review by:	Richard Romero	Richard Romero	10/24/91
QPPL Approval:	Karen L Warthen	Karen L Warthen	3/3/92
PM Approval:	Robert W Vocke	Robert W Vocke	3-4-92

Effective Date: 3-16-92

SAMPLING FOR VOLATILE ORGANICS

UNCONTROLLED

1.0 PURPOSE

This procedure describes the collection of groundwater samples from wells for analysis of volatile organic compounds (VOCs), and the selection of equipment and materials to be used in this process.

2.0 SCOPE

2.1 Applicability

This procedure applies to all personnel responsible for obtaining VOC samples for the Environmental Restoration program.

2.2 Training

The field team leader and the field team member shall be familiar with the objectives of VOC sampling and must document that they have read and understand this procedure and the procedures in Section 1.0, General Instructions.

3.0 DEFINITIONS

N/A

4.0 BACKGROUND AND/OR CAUTIONS

Sample retrieval systems potentially suitable for the valid collection of volatile organic samples are reciprocating piston-type submersible pumps; gear-driven submersible pumps; syringe samplers; and bailers (Barcelona 1984; Bennett 1988; Nielsen 1985; EPA 1986; EPA Region IV 1991). Field conditions and other considerations will limit the choice of system. The focus of concern must be to provide a valid sample for analysis, one that has been subjected to the least amount of turbulence and subsequent aeration possible. Sampling mechanisms capable of obtaining samples for VOC analyses are described below:

A. Reciprocating piston-type submersible pumps. These systems are portable, self-contained, and capable of delivery flow rates of 30 gallons per hour at lifts up to 500 feet. The pump fits into 2-inch wells, which is the most common monitor well diameter. The flow rate of the pump is varied by increasing or decreasing the driving pressure supplied to the pump from a compressed air container. The gas driving the pump does not contact the sample being purged.

B. Gear-driven submersible pumps. These pumps are not as complicated or as expensive as the bladder pumps. They provide comparable samples and are often easier to handle and

cleaner than other pumps. More care, however, must be exercised when sampling with them because the flow rate is not controllable and there is a greater potential for splashing and aeration of the sample.

C. Syringe samplers. Only a limited number of commercial, syringe-type samplers are available (two vendors are IEA and TIMCO). These devices are limited in sample volume and are specific to sampling for volatiles. Essentially, they operate with an evacuated chamber that is lowered down the well and allowed to fill from the pressure of the water. The entire mechanism is then brought to the surface with the sample. The sample can then be transferred to a sample vial, or the entire unit may be sent as the sample container, if preservation with chemical additives is not desired.

D. Bailers. The Teflon™ closed top, bottom charging type is the most appropriate bailer to collect water samples for volatile analysis. The bottom emptying device with a tab is also desirable. Several vendors provide acceptable designs. Generally, bailers can collect a representative sample, provided that the sampling personnel use extra care in the collection process.

Construction materials for pumps, bailers, and tubing are limited to stainless steel, Teflon™, and glass. The tendency of organics to leach into and out of many materials makes the selection of materials critical for these trace analyses. Plastics such as Tygon, for example, will be avoided. There are numerous ways of introducing foreign contaminants into a sample; these must be avoided by following strict sampling procedures and using only trained personnel.

Treatment of the sample with sodium thiosulfate preservative is required only when there is residual chlorine in the water. Residual chlorine could cause free radical chlorination and change the identity of the original contaminants.

If floating organics are of concern (as determined by field measurement for floating organics), a representative sample cannot be obtained with confidence.

The sensitivity of the analysis and the fragility of the samples require that all volatile samples are collected in duplicate.

Holding time for the analysis of volatiles is 7 days; vials for volatile organic analysis (VOA) may be kept for up to 14 days when preserved with acid. The samples will be shipped to the EM-9 Sample Coordination Facility (SCF) daily or following each completed sampling effort. The bottles must be shipped on their sides to aid in maintaining the airtight seal during shipment. Sample shippers (coolers) will be sealed with custody seals. They must also be adequately packed and cooled to ensure that they arrive intact. Refer to SOP-01.03, Handling, Packaging, and Shipping of Samples for further instructions.

5.0 EQUIPMENT

Equipment required to implement this procedure is listed in Attachment A.

UNCONTROLLED

6.0 PROCEDURE

A. Assemble the equipment and supplies listed in Attachment A. Ensure the proper operation of all sampling equipment. If any equipment requires calibration, be sure to record this information on the Daily Activity Log (SOP-01.04, Sample Control and Field Documentation).

B. Coordinate the sampling effort with the SCF. The SCF will give guidance regarding sample containers, preservation, and shipment to the SCF.

C. Locate monitor wells to be sampled and establish an appropriate decontamination area. Select the staging area and areas for managing purged water and expendable sampling materials. Provide barricades to public access or intrusion by non-essential personnel.

D. Decontaminate all sampling equipment before taking the first sample and between sampling intervals, in accordance with SOP-02.07, General Equipment Decontamination.

E. Purge wells before sampling, as specified in SOP-06.01, Purging of Wells for Representative Sampling of Ground Water. Ensure that the wells were not pumped dry and that flow was at rates too low to cause turbulence in the formation.

F. Perform other sampling tasks as specified in SOP-06.02, Field Analytical Measurements on Ground Water Samples before collecting volatile samples.

G. Determine if there is residual chlorine in the water to be sampled. If there is residual chlorine, treat the sample vials with a crystal of sodium thiosulfate before sample collection (SOP-01.02, Sample Containers and Preservation).

H. Determine contamination levels of wells. Monitor wells should be sampled from least to most contaminated to reduce the possibility for cross-contamination.

I. Collect VOC samples using the most appropriate sampling mechanism.

J. If a pump is used for sampling, follow the instructions for the specific pump. If a syringe is used, follow these steps:

   1. If necessary, evacuate the syringe and lower the sampling device to just below the well screen.

   2. Remove the constriction from the device and allow the syringe to fill with sample, applying slight suction.

   3. Bring unit to the surface. If necessary, transfer the sample to vials.

UNCONTROLLED

K. If a bailer is used, follow these guidelines:

1. Spread new plastic sheet on the ground around the wellhead, inside a secure, delineated zone, to establish a clean working area.

2. Decontaminate all sampling equipment per SOP-02.07.

3. Cool the bailer and sample containers before use to approximate the groundwater temperature. Avoid exposing them to direct sunlight.

4. Lower the Teflon™ closed top, bottom charging bailer into the water column slowly, noting the depth. Stop when the bailer reaches the well's screened interval.

5. Slowly recover the bailer; either retrieve the bailer, using a reel to collect the cable, or collect the cable in a cleaned stainless steel bucket.

6. Use the bailer's bottom discharge tube (Teflon™) to fill the 40-ml vials by slow drainage.

7. Repeat step 5 as necessary to acquire sufficient sample quantities.

8. The vials (40-ml) should be completely filled to prevent volatilization, and extreme caution should be exercised when filling a vial to avoid any turbulence which could also produce volatilization. The sample should be carefully poured down the side of the vial to minimize turbulence. As a rule, it is best to gently pour the last few drops into the vial so that surface tension holds the water in a "convex meniscus." The cap is then applied and some overflow is lost, but air space in the bottle is eliminated. After capping, turn the bottle over and tap it to check for bubbles. If any bubbles are present, repeat the procedure once. If a second try is required, use a new sample container. When collecting water samples for purgeable organic compounds, duplicate samples should always be collected from each location.

   Water samples to be analyzed for purgeable organic compounds should be stored in 40-ml septum vials with screw cap and Teflon™-silicone disk in the cap to prevent contamination of the sample by the cap. The disks should be placed in the caps (Teflon™ side to be in contact with the sample) by the sample container vendor before the beginning of the sampling program.

9. After each use, the sampling equipment must be decontaminated in accordance with SOP-02.07.

10. A sampling blank should be acquired periodically to test the decontamination procedure's efficiency.

11. A trip blank of distilled deionized water should be carried throughout the sampling, preservation, and shipping process.

UNCONTROLLED

6.1 Documentation

For each sample collected, initiate a Sample Collection Log, Chain-of-Custody/Request for Analysis form, and affix a Sample Label to the sample container. SOP-01.04, Sample Control and Documentation, contains copies of the forms and labels and instructions for completing them.

6.2 Postoperation Activities

A. If decontamination of sampling equipment is necessary, decontaminate as instructed in SOP-02.07, General Equipment Decontamination.

B. Make sure all wells are properly labeled and the location ID is readily visible on the protective casing. Make sure all samples are properly labeled.

C. Prepare samples and transport them to the SCF according to SOP-01.02, SOP-01.03, and SOP-01.04.

D. The field team leader will contact the SCF (EM-9) to ensure that samples arrived safely and instructions for sample analyses are clearly understood. Record this information on the Daily Activity Log.

UNCONTROLLED

7.0 REFERENCES

The following procedures are directly associated with this procedure and should be reviewed before packaging, labelling, and shipping samples:

LANL-ER-SOPs in Section 1.0, General Instructions.
LANL-ER-SOP-02.07, General Equipment Decontamination.
LANL-ER-SOP-06.01, Purging of Wells for Representative Sampling of Ground Water.
LANL-ER-SOP-06.02, Field Analytical Measurements on Ground Water Samples.

Barcelona, M. J., J. A. Helfrich, E. E. Garske, and J. P. Gibb. 1984. "A Laboratory Evaluation of Groundwater Sampling Mechanisms." Groundwater Monitoring Review, Spring 1984: 32-41.

Barcelona, M. J., J. A. Helfrich, and E. E. Garske. 1985. "Sampling Tubing Effects on Groundwater Samples." Analy. Chem. 57: 460-63.

Bennett, Robert Co. 1988. " Operation Manual for the Bennett Sampling Pump." Amarillo, TX.

DOE. 1985. "Field Technical Representative Manual." 2nd ed. U.S. Department of Energy, Uranium Mill Tailings Remedial Action Project Office, Albuquerque Operations Office document, June 1985. Albuquerque, NM.

EPA. 1981. "Manual of Groundwater Quality Sampling Procedures." U.S. Environmental Protection Agency report EPA-600/2-81-160. Washington, D.C.

EPA. 1982. "Handbook for Sampling and Sample Preservation of Water and Wastewater," U.S. Environmental Protection Agency report EPA-600/4-82-029. Washington, D.C.

EPA. 1985. "Practical Guide for Groundwater Sampling.: U.S. Environmental Protection Agency report EPA/600/2-85/104, September 1985. Washington, D.C.

EPA. 1986. "RCRA Ground Water Monitoring Technical Enforcement Guidance Document." OSWER, Washington, D.C.

EPA Region IV, 1991. "Environmental Compliance Branch Standard Operating Procedures and Quality Assurance Manual Environmental Services Division." Athens, GA.

Nielsen, David M., and Gillian L. Yeates. 1985. "A Comparison of Sampling Mechanisms Available for Small-Diameter Groundwater Monitoring Wells." Groundwater Monitoring Review, Spring 1985: 83-99.

UNCONTROLLED

8.0 RECORDS

The following records are generated as a result of this procedure:

A. Completed Daily Activity Log including any deviation or other pertinent information

B. Completed Chain-of-Custody/Request for Analysis Form

C. Completed Sample Collection Log including any deviation or other pertinent information.

9.0 ATTACHMENTS

A. Equipment and Supplies Checklist for Sampling Volatile Organics.

EQUIPMENT AND SUPPLIES CHECKLIST FOR SAMPLING VOLATILE ORGANICS

_____ Teflon™ stainless steel bladder pump
_____ Teflon™ stainless steel gear-driven submersible pump
_____ Syringe sampler; stainless steel, Teflon™, or glass
_____ Teflon™ bailer (closed top, bottom charging)
_____ Teflon™ or other chemically inert tubing
_____ Fittings for pump
_____ 40-ml amber glass vials; Teflon™-lined septa
_____ Hach® field kit for chlorine (optional)
_____ $Na_2S_2O_4$ crystals
_____ Foam sleeves, coolers, and Blue Ice (or equivalent)
_____ Stainless steel cable, reel, and tripod (if needed)
_____ Air compressor or bottled nitrogen
_____ Plastic sheet
_____ Daily Activity Logs
_____ Chain-of-Custody/Request for Analysis Forms
_____ Sample Collection Logs
_____ Variance Logs
_____ Custody Seals
_____ Unique Sample Stickers
_____ Sample Labels
_____ Any additional supplies listed in associated procedures, as needed

UNCONTROLLED

Los Alamos National Laboratory **Environmental Restoration Program** Standard Operating Procedure	No: LANL-ER-SOP-06.04 Rev: 0

Sampling Commercial/Municipal/Domestic Wells

UNCONTROLLED

	(Print Name)	(Signature)	(Date)
Preparer:	Sandra E. Wagner	Sandra E. Wagner	10-16-91
Quality Review by:	Bruce Gallaher	Bruce Gallaher	9/30/91
Technical Review by:	ALAN K STOKER		10/2/91
QPPL Approval:	Larry Maassen	Larry Maassen	10/10/91
PM Approval:	Robert W Vocke	Robert W Vocke	10/14/91

Effective Date: 3-16-92

SAMPLING COMMERCIAL/MUNICIPAL/DOMESTIC WELLS

1.0 PURPOSE

This procedure describes methods for sampling commercial, municipal, and domestic water supply wells.

2.0 SCOPE

2.1 Applicability

This procedure is applicable to field team members involved in sampling commercial, municipal, and domestic wells for the Environmental Restoration program.

2.2 Training

The field team leader and field team members should be familiar with the objectives of sampling commercial, municipal, and domestic wells and must document that they have read and understand this procedure and all of the procedures in Section 1.0, General Instructions.

UNCONTROLLED

3.0 DEFINITIONS

N/A

4.0 BACKGROUND AND/OR CAUTIONS

Water samples may be collected from industrial, public, and private water supply wells to support the site characterization of a facility (EPA 1986). Specific sampling protocols must be considered on an individual basis; each well may be completed into different aquifers, or parts of aquifers, will have a different pump, construction material, pipe, and access point for sample collection. The water samples collected are to be representative of the water aquifer within a given segment of the distribution system and potentially representative of the aquifer in which the well was installed. Consult the site-specific documentation for specific instructions for each well.

In most instances, details concerning installation and development of these wells will be incomplete. Because non-inert materials in the well and distribution systems can alter the chemistry of the sample, it is important to collect the sample as close to the wellhead as possible (EPA Region IV 1991). Following properly documented field procedures will ensure that privately owned wells do not become damaged or contaminated through sampling activities. Representative water samples must be taken from a discharge pipe or water faucet located near the supply well. Under no circumstances will the field technician pull a pump or insert a

sampling device directly into a well unless directed by or with documented approval from the field team leader and property owner.

Site workers preparing for field operations should read and understand the procedures outlined in LANL-ER-SOPs Section 2.0, Health and Safety in the Field. In addition, site workers should refer to site-specific Operable Unit Health and Safety plans for the particular health and safety equipment to be used.

5.0 EQUIPMENT

See Attachment A, Equipment and Supplies Checklist, for a list of equipment used in this procedure.

6.0 PROCEDURE

For collection of groundwater from public and private water supply wells, proceed as outlined below.

6.1 Preliminary Activities

A. Assemble the equipment and supplies listed in Attachment A. Ensure the proper operation of all sampling equipment. If calibration is required, record calibration information on the Daily Activity Log in SOP-01.04.

B. Notify the analytical laboratory of sample types, the approximate number of samples, and the approximate arrival date. Coordinate all sampling efforts with the Sample Coordination Facility.

C. Contact the carrier that will transport samples to obtain information on regulations and specifications.

D. Contact the well owner and set up a time to collect water samples and perform field chemistry measurements. If possible, arrange for commercial, municipal, and domestic wells to be sampled before the monitor wells.

E. If possible, discuss your activity with the well owner and set up the sampling vehicle in a location that will not inconvenience area residents. Also, discuss with the well owner how the purge/wastewater can be disposed of in accordance with SOP-01.06, Management of RFI-Generated Waste.

F. Decontaminate all sampling equipment before taking the first sample and between sampling intervals in accordance with SOP-02.07, General Equipment Decontamination.

UNCONTROLLED

G. Select a discharge pipe or faucet closest to the well for sampling or directly from the well, if possible.

H. Determine if the discharge pipe or water faucet is on a water treatment system of some type (water softener, for example). Note this in the comments section of the Groundwater Quality Sampling Record (refer to SOP-06.02, Field Analytical Measurements on Groundwater Samples).

I. If possible, take a water level measurement as instructed in SOP-07.02, Fluid Level Measurements. For Laboratory supply wells, record the airline pressure or transducer readout.

J. If the well is documented, well completion data will have been recorded and can be obtained. Calculate the bore volume as described in SOP-06.01, Purging of Wells for Representative Sampling of Groundwater.

6.2 Sampling Procedures

A. Detach aerators, strainers, or sink hose attachments prior to sampling.

B. Connect the appropriate sampling apparatus (cleaned tubing, connectors, and flow-through bath) to the discharge pipe. Remember that the sample should be collected as close as possible to the source, and directly from the wellhead when feasible.

C. Set up and calibrate the equipment. Calibration information must be recorded on the Daily Activity Log.

D. Begin withdrawing water from the well. If possible, run the water for at least 10 min to ensure that pipes have been thoroughly flushed. If this is not possible, purge the well as specified in SOP-06.01.

E. Perform field measurements according to SOP-06.02, Field Analytical Measurements on Groundwater Samples.

F. Collect water samples according to SOP-01.02, Sample Containers and Preservation, and SOP 06.03, Sampling for Volatile Organics.

6.3 Documentation

For each sample collected, initiate a custody record on the Chain-of-Custody/Request-for-Analysis forms and affix a Water Sample Identification Label to the sample container. SOP-01.04, Sample Control and Field Documentation, contains copies of the forms and labels and instructions for completing them. Supply well documentation must be entered on a Well Completion Information form, per SOP 05.01.

UNCONTROLLED

Whenever a well is purged or sampled, record all field measurements and chemistry determinations on either the Groundwater Level or the Groundwater Levels and Gasoline Thickness Data forms, as well as the Groundwater Quality Sampling Record form. Copies of these forms and instructions for completing them are provided in SOP-07.02, Fluid Level Measurement, and SOP-06.02, Field Analytical Measurements on Groundwater Samples, respectively.

6.4 Postoperation Activities

A. Make sure all survey or sampling locations are properly staked and the location ID is readily visible on the location stake.

B. Prepare samples and transport according to SOP-01.04 Sample Control and Field Documentation, SOP-01.02 Sample Containers and Preservation, and SOP-01.03, Handling, Packaging, and Shipping of Samples.

C. Contact the analytical laboratory to ensure that samples arrived safely and instructions for sample analyses are clearly understood.

D. If decontamination of sample containers is necessary, decontaminate according to SOP-02.07.

UNCONTROLLED

7.0. REFERENCES

The following procedures are directly associated with this procedure and should be reviewed before sampling commercial, municipal, and domestic wells:

LANL-ER-SOPs in Section 1.0, General Instructions.
LANL-ER-SOPs in Section 2.0, Health and Safety in the Field
LANL-ER-SOP-05.01, Monitor Well Construction.
LANL-ER-SOP-06.01, Purging of Wells for Representative Sampling of Ground Water.
LANL-ER-SOP-06.02, Field Analytical Measurements on Ground Water Samples.
LANL-ER-SOP-06.03, Sampling for Volatile Organics.
LANL-ER-SOP-07.02, Fluid Level Measurement.

EPA, 1986. "RCRA Ground Water Monitoring Technical Enforcement Guidance Document." OSWER, Washington, D.C.

EPA Region IV, 1991. "Environmental Compliance Branch Standard Operating Procedures and Quality Assurance Manual Environmental Services Division." Athens, GA.

8.0 RECORDS

Records generated as a result of this procedure are:

A. Completed Daily Activity Log that includes (if alternate forms are not available):

- Groundwater Level
- Groundwater Quality Sampling Record
- Deviations (if applicable)
- Any other pertinent information.

B. Completed Chain-of-Custody/Request for Analysis Form

9.0 ATTACHMENTS

A. Equipment and Supplies Checklist for Sampling Commercial/Municipal/Domestic Wells

UNCONTROLLED

EQUIPMENT AND SUPPLIES CHECKLIST FOR SAMPLING COMMERCIAL/MUNICIPAL/DOMESTIC WELLS

_____ Teflon™ tubing

_____ Pump fittings

_____ Water level probe

_____ Calibrated bucket

_____ Stopwatch

_____ Sample containers and preservatives

_____ Foam sleeves, vermiculite coolers, and Blue Ice (or equivalent)

_____ Plastic sheet

_____ Daily Activity Log

_____ Chain-of-Custody/Request-for-Analysis Forms

_____ Sample Collection Log

_____ Variance Log

_____ Custody Seals

_____ Unique Sample Stickers

_____ Sample Labels

_____ Any additional supplies listed in associated procedures, as needed

UNCONTROLLED

Los Alamos National Laboratory **Environmental Restoration Program** Standard Operating Procedure	No: LANL-ER-SOP-06.05 Rev: 0

Soil Water Samples

UNCONTROLLED

	(Print Name)	(Signature)	(Date)
Preparer:	Sandra Wagner	Sandra C. Wagner	10-24-91
Quality Review by:	Bruce Gallaher	Bruce Gallaher	9/30/91
Technical Review by:	Philip Fresquez	Philip R. Fresquez	10/4/91
QPPL Approval:	Larry Maassen	Larry Maassen	10/24/91
PM Approval:	Robert W Vocke	Robert W Vocke	10/24/91

Effective Date: 3-16-92

TABLE OF CONTENTS

1.0 PURPOSE 2
2.0 SCOPE 2
  2.1 Applicability 2
  2.2 Training 2
3.0 DEFINITIONS 2
4.0 BACKGROUND AND/OR CAUTIONS 2
5.0 EQUIPMENT 3
6.0 PROCEDURE 3
  6.1 Assembly of Soil Water Sampler 3
  6.2 Installation of Soil Moisture (Water) Sampler 4
  6.3 Final Installation 5
  6.4 Collecting Soil Water Samples 6
  6.5 Sample Filtering/Preservation 7
  6.6 Obtaining Field Measurements 8
  6.7 Postoperation 8
7.0 REFERENCES 9
8.0 RECORDS 9
9.0 ATTACHMENTS 9
  A. Equipment and Supplies Checklist 11
  B. Soil Water Sampling Field Data 12
  C. Soil Water Sampler Installation Showing Bentonite Seal 13
  D. Soil Water Sampler Installation Showing Pressure-Vacuum Assembly 14
  E. Purging of Slurry Water with Soil Water Sampler 15
  F. Collection of Soil Water Samples 16
  G. Soil Water Sampler Installation 17
  H. Data Form Completion 18

UNCONTROLLED

SOIL WATER SAMPLES

1.0 PURPOSE

This procedure defines the equipment and proper method for sampling soil water.

2.0 SCOPE

2.1 Applicability

This procedure is applicable to the operation of soil water samplers (lysimeters) for the Environmental Restoration Program.

2.2 Training

The field team leader is responsible for monitoring the proper implementation of this procedure. Field team members using this procedure should be familiar with the objectives of the program, including sample collection, preservation and handling, and must document that they have read and understand this and the procedures in Section 1.0, General Instructions.

UNCONTROLLED

3.0 DEFINITIONS

A. Drilling string: The string of pipe that extends from the bit to the driving mechanism that serves to carry the mud down the borehole and to rotate the bit.

B. Split-spoon sampler: A hollow, tubular sampling device driven by a weight below the drill stem to retrieve soil samples.

C. Unsaturated hydraulic conductivity: A coefficient describing the rate at which a fluid can potentially move through a permeable, unsaturated medium (EPA 1986a).

D. Vadose zone: The partially saturated zone between the surface and the water table.

4.0 BACKGROUND AND/OR CAUTIONS

Soil water samplers, or lysimeters, are used to sample water in the vadose zone. The lysimeter applies pressure to the vadose zone, which mobilizes pore water partially filling soil particle interstices. Once the water is mobilized it will move toward and will collect in the sampling vessel of the lysimeter. If present, contamination generally is mobilized along with the water and can be detected as constituents of the pore water.

Three common types of lysimeters are available: vacuum, pressure-vacuum, and high-pressure-vacuum. Selection of the appropriate lysimeter is based on the target sampling depth. The vacuum lysimeter is designed to sample from 0 to 6 feet; the pressure-vacuum lysimeter is

designed to sample to 50 feet; and the high-pressure-vacuum lysimeter is designed to sample greater depths. Soil water samples may be obtained from shallow depths with a hand pump and from greater depths with pressurization by an inert gas such as nitrogen. Lysimeters can be installed singly or in clusters of one or more at varying depths. The site-specific work plan will define the types of lysimeters and the sampling locations and depths.

Lysimeters may be installed in a variety of subsurface environments and soil types. Lysimeters are most efficient in unconsolidated granular soils ranging in particle size from coarse sand to silt. Lysimeters may not perform efficiently in clay soils. Pore pressures in clay may be great enough to significantly reduce transport of soil water. This is a problem for two main reasons: (1) the volume of the sample may not be adequate for metals analysis, and (2) the time required to collect adequate volume for volatile organic analysis may exceed the holding time. Another limiting factor for lysimeters is that the sample vessel may become clogged by fine particles or the waste type may cause bacteria or a chemical precipitate to form.

A variety of drilling methods may be used to achieve the desired depth for lysimeter installation. However, drilling methods employing fluids should not be used. Borehole integrity must be maintained, and the drilling method should be chosen accordingly.

The sampling devices can be damaged as a result of intrusion by people, wildlife, livestock, or mechanical equipment. Fencing around the site may be necessary. Do not cover the surface area directly above the samplers in a way that interferes with the normal percolation of soil moisture down to the depth of the soil water sampler.

Site workers preparing for field operations should read and understand the procedures outlined in LANL-ER SOPs, Section 2.0, Health and Safety in the Field. In addition, site workers should refer to site-specific Operable Unit Health and Safety plans for the particular health and safety equipment to be used.

UNCONTROLLED

5.0 EQUIPMENT

Refer to the equipment list in Attachment A.

6.0 PROCEDURE

A. Assemble the equipment and supplies. Ensure the proper operation of all sampling equipment.

B. Coordinate all sampling efforts with the Sample Coordination Facility.

C. Lysimeters are generally packaged in protective plastic by the manufacturer; therefore, a distilled water rinse is sufficient. (These procedures may vary according to manufacturer's specifications.) Harsh chemicals may damage the equipment.

6.1 Assembly of Soil Water Sampler

A. After the hole has been drilled, immerse the porous ceramic cups of the soil water samplers in distilled water until saturated (approximately 1 hour). Use distilled water to thoroughly flush the sampler cup before installation. The porous cup must be saturated when installed.

B. Determine the length of access tubes (1/4-inch Teflon™ tubing). Two lengths of access tubes are required.

1. Connect discharge and internal collection tubing.

2. The pressure vacuum tube should protrude to approximately 1/2 inch above the ceramic plug.

C. Leave tubing sticking above the polyvinyl chloride (PVC) cap, and identify the tubes by function. Wrap all threaded connections with Teflon™ tape as a sealant.

6.2 Installation of Soil Moisture (Water) Sampler

Once the lysimeter has been assembled, install the sampler into the drilled or bored hole. The porous ceramic cup must be kept in tight contact with the soil during drilling so that soil moisture can readily move from the soil to the lysimeter. Select either of the following methods based on the drilling method used:

A. Hollow-stem auger drilling (SOP-04.02, Hollow-Stem Auger)

1. Install the lysimeter through the hollow stem while the auger is in the ground.

2. Terminate augering and use a split spoon (3-inch outside diameter [OD]) to knock the plug out of the bottom of the auger to collect the final foot of material approximately 1 ft above the desired depth of instrument installation.

3. After completion of the boring, add about a 1-inch layer of slurry silica flour (200-mesh silica flour), using distilled water, to the bottom of the borehole.

4. Install the lysimeter so that it rests directly on the silica flour.

5. Add a 2- to 4-inch layer of slurry to the hole, enveloping the ceramic tip of the instrument.

6. Add about 1 ft of moist, 50-mesh quartz sand.

7. Retract the auger 3 to 4 ft and gently tamp the sand with a 1-inch-diameter rod or tremie pipe inserted through the hollow stem. Use the tamping rod to keep the instrument seated as the auger string is retracted.

UNCONTROLLED

8. Add 50-mesh sand and tamp with the rod in intervals of 1 to 2 ft. until the sand covers the silica flour and the auger is completely withdrawn.

B. Air rotary drilling (SOP-04.04, Rotary Drilling)

1. Install the lysimeter in the open borehole after the drilling string is removed.

2. Terminate drilling at the desired depth of instrument installation.

3. Withdraw all drill pipe and bit from the borehole and continue as for hollow-stem auger drilling.

6.3 Final Installation

A. After inspection, place a bentonite seal above the sand. The bentonite seal is shown in Attachment C.

B. After installing the bentonite seal, backfill the borehole to the ground surface. If the sampler is being installed at a site known to be uncontaminated, native soil previously removed from the hole may be used as backfill. If there is any possibility of introducing contaminated soil or tailings into the borehole, use clean, well-graded sand as backfill.

C. Proceed with backfilling to approximately 10 ft below the land surface. In holes less than 10 ft deep, reduce the amount of backfill as appropriate.

D. Backfill the remainder of the borehole with a bentonite/sand seal. Bentonite may be mixed with native soil only at uncontaminated sites.

E. As soon as practical after installation, have the field technician use the pressure-vacuum pump to extract the slurry water that was introduced with the silica flour and silica sand (Attachment D). Continue purging until the same quantity of water that was used to prepare the slurry has been removed. Collect a soil moisture sample after the purging has been completed, as shown in Attachment E.

F. Sink a steel protective casing into the bentonite soil plug, surrounding the soil water sampler vacuum tubes.

G. A casing is a mild steel pipe with a 6-inch diameter. The casing should extend approximately 2 ft into the plug and rise above the land surface about 1 ft. The top of the pipe should be filled with a hinged cap.

H. Protect the soil water sampler from possible damage by vehicular traffic or grazing livestock. Surround the protective casing with barrier posts to protect the location if appropriate.

UNCONTROLLED

6.4 Collecting Soil Water Samples

A vacuum applied within the soil water sampler causes moisture to move from the soil through the porous ceramic cup into the sample bottles. Because the rate at which a sample is collected is a function of the unsaturated hydraulic conductivity of the soil and the amount of vacuum that is created, the time required to collect a sample may vary. Generally, a vacuum of 50 to 80 centibars is sufficient to collect a sample in a few hours. However, under conditions of low conductivity or low moisture content in the soil, several days or weeks may be required to collect a sample. Because it is usually impossible to collect enough sample for a complete analysis, the order in which the constituents are analyzed must be prioritized, as follows:

1. Volatile organic compounds

2. U(1), Mo(2), As(3), Ba(4), Cd(5), Cr(6), and Pb(7)

3. All others

NOTE: Numbers in parentheses indicate the order of analysis within the group. The operable unit project leader may establish a different set of priorities for analysis.

Samples collected may be hazardous. Wear disposable surgical gloves when collecting samples. Avoid splashing the liquid in eyes or on clothes. Additional decontamination precautions are outlined in SOP-02.07, General Equipment Decontamination; and SOP-02.08, Personnel Decontamination.

A. To collect a sample, close the pinch clamp on the discharge access tube and connect the vacuum port of the pressure-vacuum pump to the pressure-vacuum access tube. Vacuum is applied until approximately 60 centibars is created with the sampler, as read out on the gauge connected to the pump (Attachment D).

B. Securely close the pinch clamp on the pressure-vacuum access tube to seal the sampler under vacuum. Allow the sampler to set for a period of time under vacuum.

C. To recover a soil water sample, attach the pressure-vacuum access tube to the pressure port on the pump. Place the discharge access tube in a small, clean collection bottle and open both pinch clamps. Develop enough pressure within the sampler to force the collected water out of the sampler and into the collection bottle (as shown in Attachment F).

   NOTE: Whenever a sample is collected, a custody record must be initiated on the Sample Collection Log, Chain-of-Custody/Request for Analysis form, and a Sample Label affixed to the sample container (refer SOP-01.04).

UNCONTROLLED

6.5 Sample Filtering/Preservation

A. Filtering

Before field measurements are taken, samples may need to be filtered. If more than 500 ml is available, a large filtering system may be used; otherwise, a syringe/filter system must be used. When applicable, follow the SOP-10.02, Portable Gas Chromatography for Field Screening of Volatile Organic Compounds. Procedures specific to collecting soil water samples are described below:

1. Large filtering system

   a. Disassemble the filter apparatus and discard the old filter. Thoroughly rinse in distilled water all surfaces that come in contact with the sample.

   b. With clean gloves, install a new filter, touching it only along its perimeter. Do not allow dirt or dust to blow onto the cleaned apparatus or filter. Reassemble the apparatus.

   c. Before taking any samples, run a few milliliters of sample water through the filter.

   d. Fill the sample bottles through the filter. Do not allow dirt or dust to blow into bottles or bottle caps.

2. Syringe/filter system

   a. Fill the syringe with sample by drawing sample into syringe with the plunger.

   b. Connect a new syringe filter to the base of the syringe and force sample through the filter into a clean sample bottle by depressing the syringe plunger.

   c. Repeat the above steps until all samples have been filtered.

   d. Discard the used syringe and filter.

B. Preservation

1. If sample volume is less than 250 ml, acidify the sample. Add nitric acid (HNO_3) in sufficient volume to lower the pH of the sample to approximately 2.0. The pH of some soil water samples may be less than 2.0 without being acidified. If sample volume is more than 250 ml, put the next 150 ml into a bottle unacidified. Consult SOP-01.02, Sample Containers and Preservation, for further instructions.

UNCONTROLLED

2. Note the amount and type of preservative on data forms. Check the pH of the sample with pH paper to ensure that sufficient acid has been added. Once the appropriate acid has been added, seal sample bottles with electrical tape.

6.6 Obtaining Field Measurements

A. Record all field measurements and comments on the Soil Water Sampling Field Data form (Attachment B). Fill out the form as described in Attachment H. Additional comments should be noted in the Daily Activity Log form presented in SOP-01.04.

B. After the samples have been collected, measure and record pH, specific conductance, Eh, temperature, alkalinity, and dissolved oxygen using the instructions provided in SOP-06.02, Field Analytical Measurements of Groundwater Samples. The field measurements will be recorded directly onto the Soil Water Sampling Field Data form (Attachment B).

Because some sample loss will occur during testing, take measurements only if 500 ml or more are collected. Do not perform alkalinity tests unless the pH of a sample is greater than 4.5. Guard against cross-contamination.

C. After completing the field measurements, record the number of sample containers collected in the middle of the Soil Water Sampling Field Data form. Describe sample collection by volume (1 liter, 500 ml, 250 ml, or other specified volume) and by preservation method (nonacidified or acidified) and add the respective amount of acid (in milliliters) to each acidified container for sample preservation requirements.

6.7 Postoperation

A. Ensure that all equipment is accounted for, decontaminated, and ready for shipment.

B. Restore the site to presampling conditions.

C. Make sure all soil water sampling locations are properly staked and the location ID is readily visible on the location stake.

D. Prepare samples and transport.

7.0 REFERENCES

The following procedures are directly associated with this procedure and should be reviewed prior to sampling:

LANL-ER-SOPs in Section 1.0, General Instructions.
LANL-ER-SOPs in Section 2.0, Health and Safety in the Field
LANL-ER-SOP-04.02, Hollow-Stem Auger.
LANL-ER-SOP-04.04, Rotary Drilling.

UNCONTROLLED

LANL-ER-SOP-06.02, Field Analytical Measurements of Groundwater Samples.
LANL-ER-SOP-10.02, Portable Gas Chromatography for Field Screening of Volatile Organic Compounds.

Allmaras, R. R. 1965. "Methods of Soil Analysis." Agronomy Monograph No. 9, pt. 1: 24-42. Am. Soc. Agronomy, Madison, Wisconsin.

EPA 1986a. RCRA Ground Water Monitoring Technical Enforcement Guidance Document. OSWER, Washington, D.C.

EPA 1986b. Test Methods for Evaluating Solid Waste, Third Edition, Vol. II. EPA Publication No. SW-846. OSWER, Washington, D.C.

Krumbein, W. C., and F. A. Graybill. 1965. An Introduction to Statistical Models in Geology, 171-181. McGraw-Hill Book Company, New York.

UNCONTROLLED

8.0 RECORDS

A. Completed Soil Water Sampling Field Data Form.

B. Include all field notes and other pertinent data on the Daily Activity Log presented in SOP-01.04.

9.0 ATTACHMENTS

A. Equipment and Supplies Checklist or Soil Water Samples

B. Soil Water Sampling Field Data

C. Soil Water Sampler Installation Showing Bentonite Seal

D. Soil Water Sampler Installation Showing Pressure-Vacuum Assembly

E. Purging of Slurry Water with Soil Sampler

F. Collection of Soil Water Samples

G. Soil Water Sampler Installation

H. Data Form Completion

EQUIPMENT AND SUPPLIES CHECKLIST FOR SOIL WATER SAMPLES

_____ Complete lysimeter assembly, PVC Schedule 40 or Schedule 80

_____ Porous ceramic cup(s)

_____ Ceramic plug(s)

_____ Body tube, PVC

_____ 1/4-inch-diameter Teflon™ tubing

_____ Teflon™ tape

_____ Vacuum pump

_____ Pinch clamps

_____ 4-inch auger

_____ 3/16-inch ID x 1/8-inch wall neoprene tubing

_____ Tamping rod

_____ Distilled water

_____ Bentonite pellets

_____ pH paper

_____ Sample containers and preservatives

_____ pH meter

_____ Alkalinity test kit

_____ Thermometer

_____ Filter assembly

_____ 0.45-micron filters

_____ Nitric acid (HNO_3)

_____ Soil Water Sampling Field Data Forms

UNCONTROLLED

EQUIPMENT AND SUPPLIES CHECKLIST FOR SOIL WATER SAMPLES (Continued)

_____ Daily Activity Logs

_____ Chain-of-Custody/Request for Analysis forms

_____ Sample Collection Logs

_____ Variance Logs

_____ Custody Seals

_____ Unique Sample Stickers

_____ Sample Labels

_____ Any additional supplies listed in associated procedures, as needed.

UNCONTROLLED

SOIL WATER SAMPLING FIELD DATA

LOS ALAMOS NATIONAL LABORATORY
ENVIRONMENTAL RESTORATION
SOIL WATER SAMPLING FIELD DATA

Date: _____ Sheet _____ of _____

Technical Area _____ Operable Unit _____

Site Work Plan: _____

Signature: _____

AFFIX FIRST SAMPLE STICKER HERE

AFFIX LAST SAMPLE STICKER HERE

FINAL FIELD VALUES:

pH (S.U.) _____
Ec (umhos/cm) _____
Eh (mvolts) _____
Temp (°C) _____
Alkalinity (mg/l $CaCo_3$) _____
Dissolved Oxygen (mg/l) _____

Volume Sample Collected _____
Vacuum applied _____
Location Description _____

	CONTAINER SIZE	NONACIDIFIED	ACIDIFIED	VOL ACID (ml)
NUMBER OF CONTAINERS COLLECTED:	ONE LITER			
	500 ml			
	250 ml			
SPECIFY OTHERS:				

COMMENTS: _____

☐ CHECK HERE IF CONTINUED ON BACK OF THIS SHEET

ER-SOP-06.05, R0 5/91

EXAMPLE
UNCONTROLLED
CONTACT THE PROGRAM OFFICE FOR MASTER FORMS

SOIL WATER SAMPLER INSTALLATION SHOWING BENTONITE SEAL

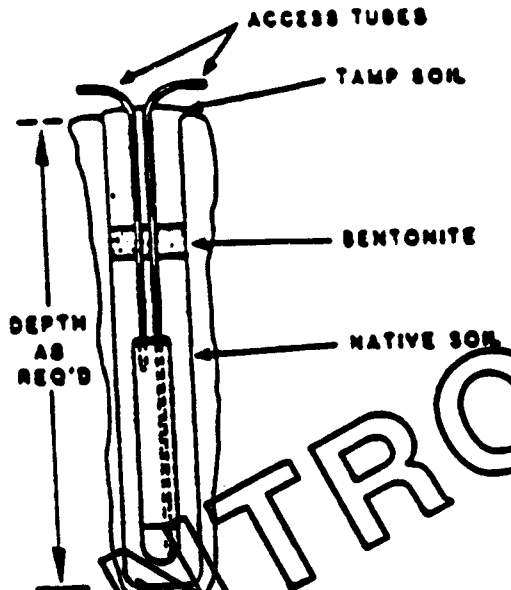

UNCONTROLLED

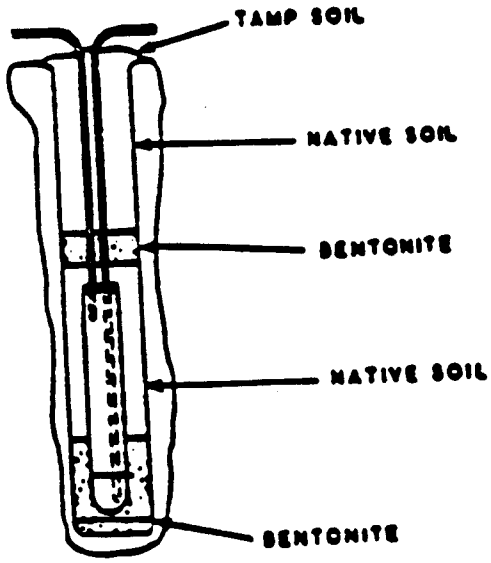

SOIL WATER SAMPLER INSTALLATION SHOWING PRESSURE-VACUUM ASSEMBLY

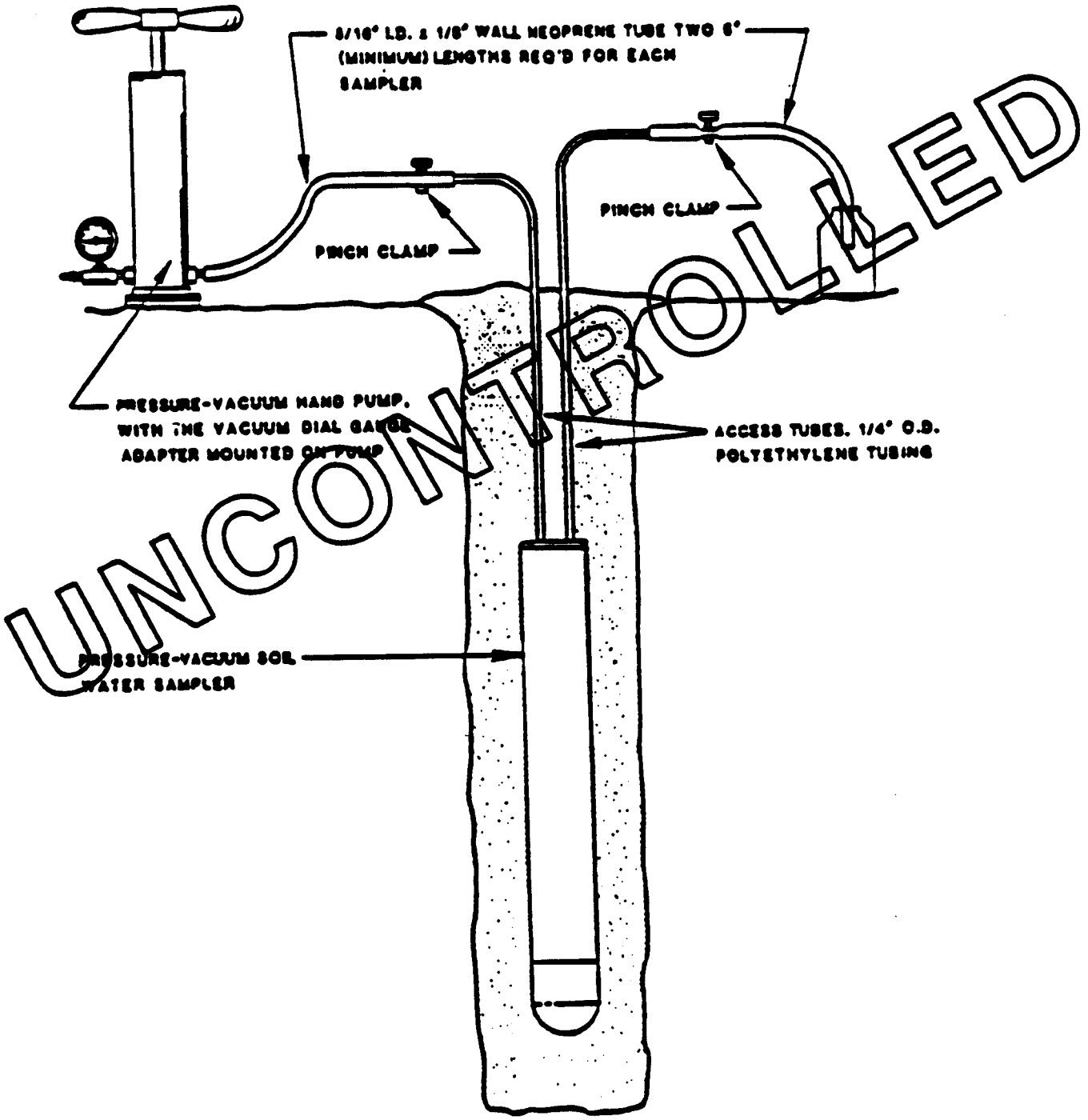

UNCONTROLLED

PURGING OF SLURRY WATER WITH SOIL SAMPLER

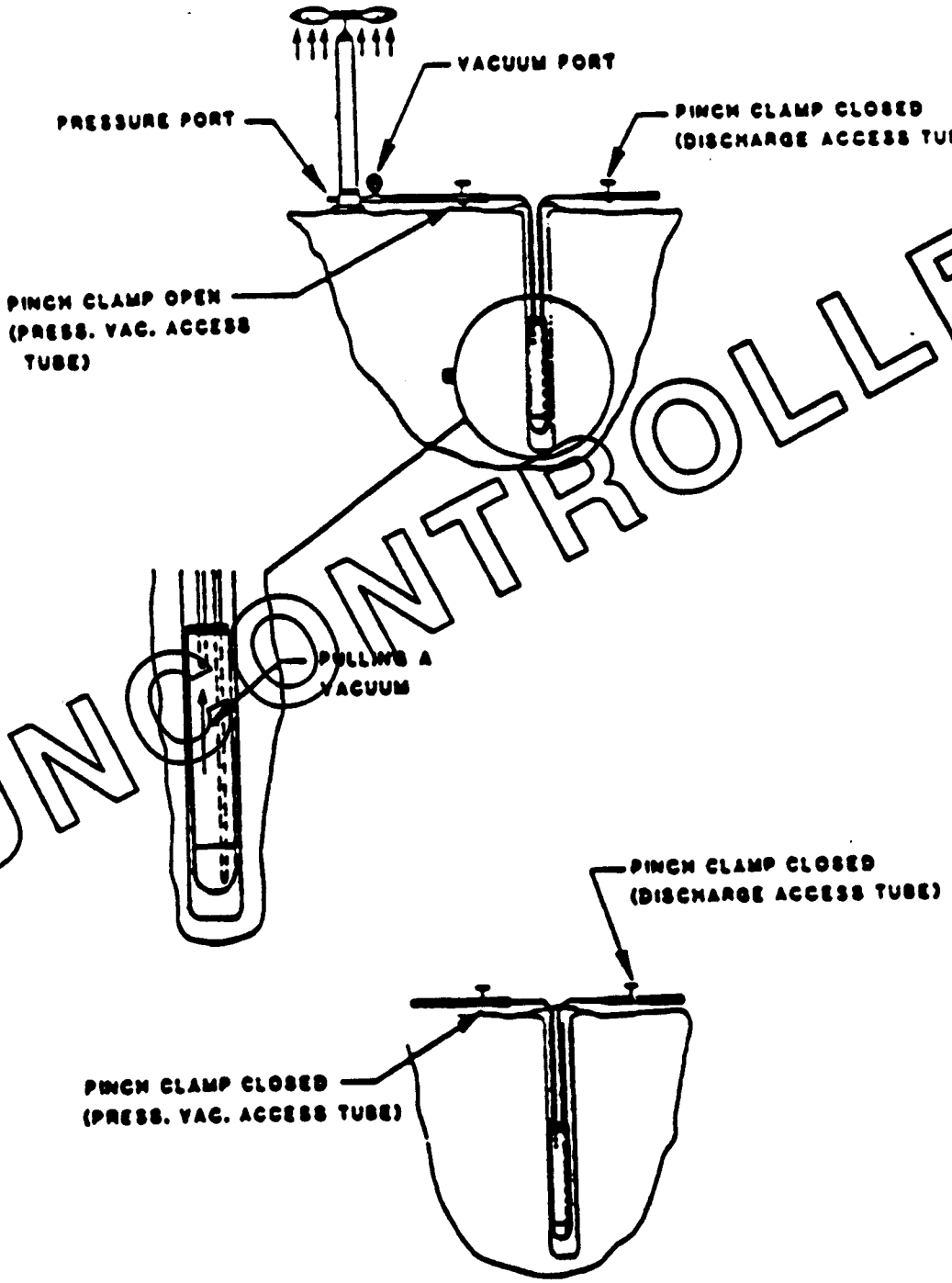

UNCONTROLLED

COLLECTION OF SOIL WATER SAMPLES

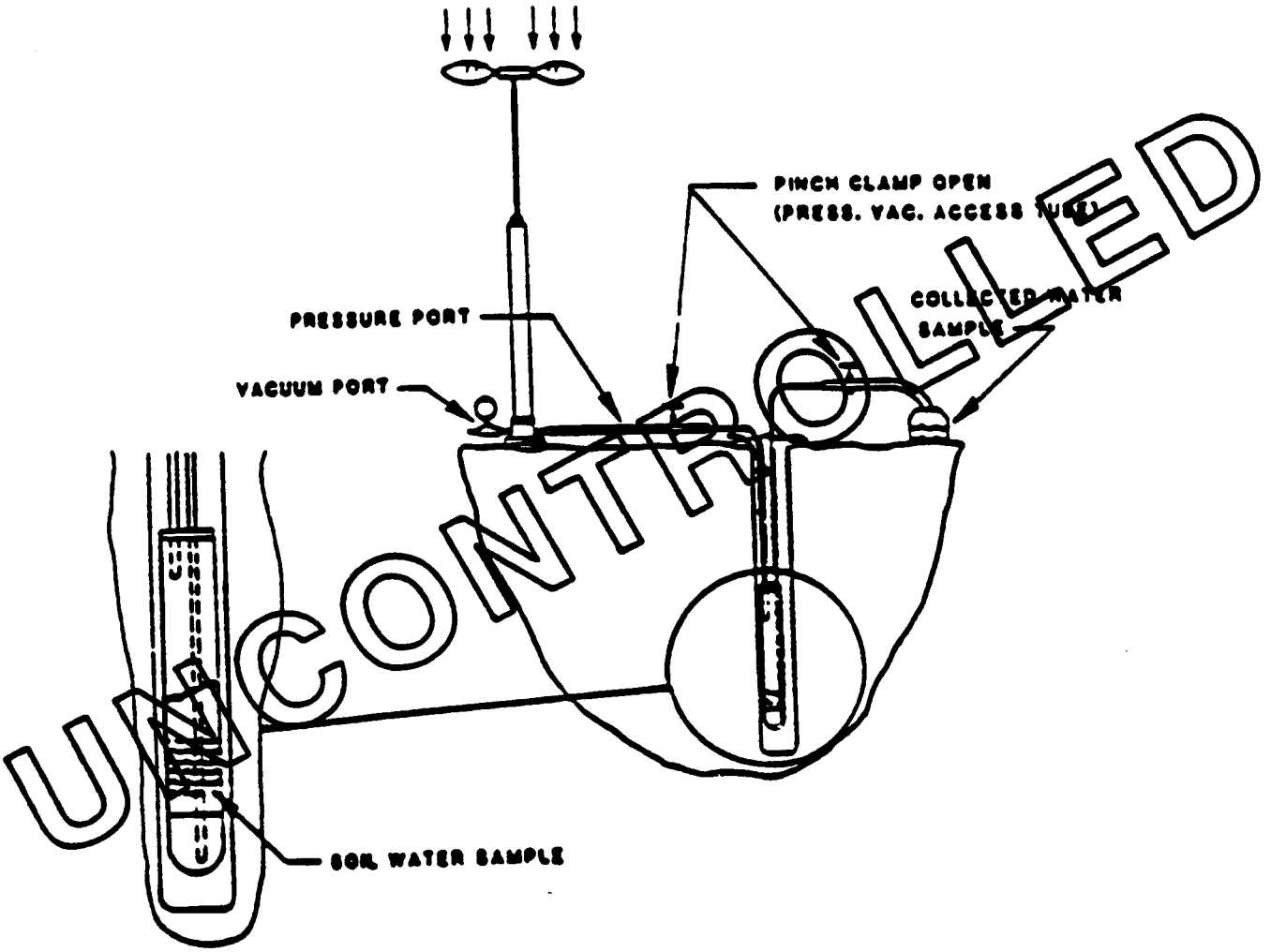

UNCONTROLLED

SOIL WATER SAMPLER INSTALLATION

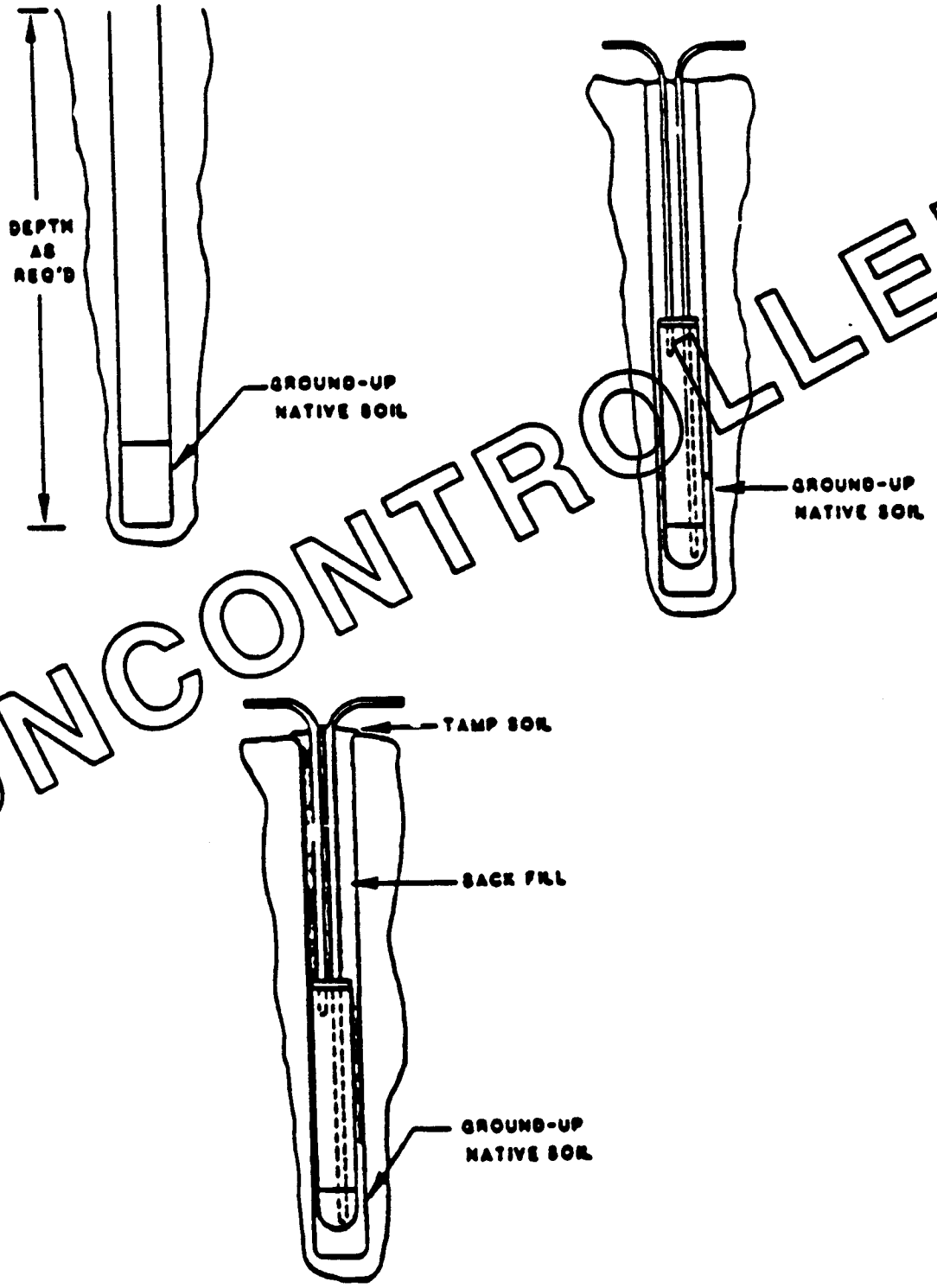

UNCONTROLLED

DATA FORM COMPLETION

Use an indelible dark ink pen. Make an entry in each blank. For entry blanks for which no data are obtained, enter UNK for Unknown, NA for Not Applicable, or ND for Not Done. To change an entry, draw a single line through it, add the correct information above it, and date and initial the change. For all forms, complete the following information:

1. Technical Area (TA). Two-digit number indicating the TA in which the sampling is being done or sample is being studied.

2. Operable Unit. Four-digit number indicating the Operable Unit in which the sampling is being done or sample is being studied.

3. Sample Identification:

   - If the Daily Activity Log addresses only one sample, attach a sticker from the batch of stickers that match the sticker number on the sample, and line through the box labeled "Attach Last Sample Number Here."

   - If the Daily Activity Log addresses a sequential number of samples, put the first matching sample sticker in the box marked "First" and put the last matching sample sticker in the box marked "Last."

   - If sample identifiers used are not sequential, be sure to affix the lowest sample sticker number in the left box, record the remaining sample identifiers on the form and Daily Activity Log, and line through the "Last" box.

4. Log Date and Time. The date and time when the measurement was made, in the following formats: DD-MMM-YY (e.g., 01-JAN-91) and the 24-hour clock time (0837 for 8:37 a.m. and 1912 for 7:12 p.m.).

5. Sheet Number. Number all the sheets that are used for this activity, by day or by some practical unit.

6. Weather and other comments. Record all other conditions pertinent to the sample collection in this section on the Daily Activity Log presented in SOP-01.04.

7. Volume Sample Collected (ml). The amount of sample collected recorded in milliliters.

8. Vacuum Applied. Record the vacuum applied to the soil water sampler to collect a sample in centibars.

9. pH. The pH of the water sample at the time of collection.

UNCONTROLLED

10. Ec (µmhos/cm). The specific conductance of the water sample in micromhos/cm at the time of collection.

11. Eh (Mvolts). The redox potential of the water sample in millivolts at the time of collection.

12. Temp. (°C). The temperature of the water sample in degrees Celsius at the time of collection.

13. Alkalinity (mg/l $CaCo_3$). The alkalinity of the water sample in milligrams per liter at the time of collection.

14. Dissolved Oxygen. The dissolved oxygen content of the water sample in milligrams per liter (mg/l) at the time of collection.

15. Location Description. Approximate location of soil water sampler with respect to some known geographic location.

16. Nonacidified. Number of sample containers filled using the specified field preparation method.

17. Acidified. Number of sample containers filled using the specified field preparation method.

18. Vol Acid (ml). Volume of acid in millileters (ml).

19. Specify Others. Any other types of sample containers filled.

UNCONTROLLED

Los Alamos National Laboratory **Environmental Restoration Program** Standard Operating Procedure	No: LANL-ER-SOP-06.06 Rev: 0

Tensiometer (Soil Suction Monitor) Installation and Measurement

UNCONTROLLED

	(Print Name)	(Signature)	(Date)
Preparer:	Sandra E. Wagner	Sandra E. Wagner	10-16-91
Quality Review by:	Bruce Gallaher	Bruce Gallaher	9/30/91
Technical Review by:	Paul L. Aamodt	Paul L. Aamodt	10/26/91
Technical Review by:		SW	10-16-91
QPPL Approval:	Karen L Warthen	Karen L Warthen	3/3/92
PM Approval:	Robert W Vocke	Robert W Vocke	3-4-92

Effective Date: 3-16-92

TABLE OF CONTENTS

1.0 PURPOSE 2
2.0 SCOPE 2
2.1 Applicability 2
2.2 Training 2
3.0 DEFINITIONS 2
4.0 BACKGROUND AND/OR CAUTIONS 2
5.0 EQUIPMENT 3
6.0 PROCEDURE 3
6.1 Assembly and Filling 3
6.2 Installation 4
6.3 Field Measurements 5
6.4 Gauge Calibration 5
6.5 Freezing Conditions 5
6.6 Postoperation Activities 5
7.0 REFERENCES 6
8.0 RECORDS 7
9.0 ATTACHMENTS 7
A. Equipment and Supplies Checklist 8
B. Component Parts of a Tensiometer 9
C. Adjusting the Vacuum Gauge Dial 10
D. Tensiometer Sampling Field Data Form 11
E. Data Form Completion 12
F. Filling the Tensiometer Tube by Inducing Vacuum 14
G. Removing Air From the Tensiometer 15

UNCONTROLLED

TENSIOMETER (SOIL SUCTION MONITOR) INSTALLATION AND MEASUREMENT

1.0 PURPOSE

This procedure defines a method of placement, installation, and operation of soil suction monitors (tensiometers) for measurement of soil moisture potential for use in the Environmental Restoration (ER) program.

2.0 SCOPE

2.1 Applicability

This procedure is applicable for operating tensiometers for the ER program.

2.2 Training

The field team leader is responsible for monitoring the proper implementation of this procedure. The field team members should be familiar with the objectives of the sampling program and should document that they have read and understand this and the procedures in Section 1.0, General Instructions.

UNCONTROLLED

3.0 DEFINITIONS

A. Potentiometer: An instrument for measuring an unknown potential difference by comparison to a standard.

B. Soil hygrometer: An instrument that measures soil moisture.

4.0 BACKGROUND AND/OR CAUTIONS

The tensiometer (also known as capillary potentiometer, soil hygrometer, or soil moisture meter) is an instrument that provides a direct measurement of the negative pressure potential or suction in a soil. Tensiometers are used when it is necessary to measure the gradient in pressure potential to determine the direction and rate of water movement in a soil profile.

The Site-Specific Work Plan contains specific details about the procedures and equipment for this SOP. Refer to the plan for the type of samples to be collected. Collection and measurement of samples and the documentation of data will be performed as described in the associated procedures.

The tensiometer measures the matric potential (capillary potential) of a soil for suction values between 0.1 and 1 bar. The measured matric potential can be used with soil moisture content data to construct a soil moisture characteristic curve for vadose-zone characterization and modeling.

A specific discussion of tensiometer locations, installation depths, sampling methods, and other details concerning the deployment of tensiometers at installation sites is contained in the Site-Specific Work Plan.

5.0 EQUIPMENT

Equipment to implement this procedure is listed in Attachment A. Attachment B shows the components of a tensiometer.

6.0 PROCEDURE

A. Assemble the equipment and supplies listed in Attachment A. Ensure the proper operation of all sampling equipment.

B. Pack tensiometers so that dial gauges and ceramic tips are not damaged during shipment to the site. Wrap individual tensiometer pieces separately in paper and package the tensiometers securely inside the shipping boxes. Prevent ceramic tips from contacting grease or similar material that would clog the pores.

6.1 Assembly and Filling

The component parts of a tensiometer are shown in Attachment B. To assemble the tensiometers, follow the steps below.

A. Before assembling the tensiometer, make sure all parts are clean and have not been damaged in shipping. Do not use any damaged equipment.

B. Screw the vacuum dial gauge into the threaded port in the side of the body tube until the backup washer on the stem body touches the body tube. Do not overtighten the dial gauge in the body tube; the O-ring on the stem ensures a tight vacuum seal.

C. Screw the ceramic tip into the body tube to the desired length.

D. Before putting the tensiometer to use, vent the dial gauge by momentarily removing the vent screw in the center of the dial gauge cover. This will adjust the dial gauge to local conditions; the gauges are usually set at sea level atmospheric conditions.

E. Use distilled water or a fluid prepared to inhibit algae growth that shows air bubble accumulation to fill the tensiometers. Allow the tensiometer body tube to remain in a vertical position until fluid completely saturates the ceramic tip and drips from the end of the tip for about 5 minutes.

F. Once the tip is saturated, fill the tube completely with distilled water and pull a vacuum within the top of the tensiometer using the vacuum hand pump. After each pumping with the vacuum hand pump, refill the tensiometer completely to the top with water.

UNCONTROLLED

Repeat pumping four or five times or until no further air is seen bubbling from the stem of the dial guage. If the hand pump is not available, air can be adequately removed from the tensiometer by pushing the reservoir button down repeatedly after the tensiometer and reservoir have been filled.

G. Screw the fill reservoir cap into the top of the tube body.

H. Peel the neoprene reservoir cover back and fill the reservoir approximately 75% full. Replace the neoprene cover back over the fill reservoir cap and push the reservoir button (Attachment B) down several times to remove air from the reservoir pump cylinder and any accumulated air in the tensiometer.

I. Repeat the vacuum/pumping operation four or five times until there are no further air bubbles from the stem of the vacuum gauge.

J. Because commercial gauge-type tensiometers generally are not corrected for the length of the tensiometer, adjust the dial on the vacuum gauge to zero (Attachment C) when the tip of the tensiometer is immersed in water.

K. If the tensiometer will not be installed immediately, store it with the ceramic tips immersed in distilled water or covered with a plastic bag to prevent evaporation.

6.2 Installation

A. In soft, friable soils, push the shorter tensiometers directly into the ground.

B. In firm soils, core a hole in the soil to accept the tensiometer. The hole must be the right size for a snug fit between the ceramic tip and the soil. An insertion tool or length of standard 1/2-inch water pipe may be driven into the soil to create the hole.

C. If rocky soil is encountered, seek an adjacent location for more workable soil. If the soil is rocky, then use a 4-inch soil auger to produce a tensiometer hole. Pass the removed soil through a 1/4-inch screen to remove large pebbles and rocks. Replace the screened soil as close to its original position as possible.

D. For deep installations or installations in rocky soils, produce a slurry of water and clean silica flour and pour it into the bottom of the hole. Push the ceramic tip into the slurry to ensure good contact in the soil. Pull up gently on the probe to check the strength of the suction. Repeat steps if probe releases easily.

E. Tamp the soil around the tensiometer into place to guard against water channeling down the hole. The soil around the tensiometer should not be compacted tightly during installation.

UNCONTROLLED

F. After installation, several hours may be required before the tensiometer reads the correct soil suction value. Additional time may be required when a slurry is used. The correct value will be known when the water in the ceramic tip has come into equilibrium with the soil solution and the vacuum gauge reads a constant value. Correct readings will be reached more quickly in moist soils than in dry soils.

G. Install surface casing and locking caps to protect the tensiometers.

6.3 Field Measurements

Most tensiometers have a dial-type manometer to indicate the pressure potential. Their scale is given in centibars, from 0 to -100. Therefore, -50 centibars equals -0.5 bar, which is equivalent to a pressure potential of -500 cm water. Record tensiometer pressure potentials on the Tensiometer Sampling Field Data form (Attachment D). Use the Data Form Completion, Attachment E, for detailed instructions. For additional comments, use the Daily Activity Log (SOP-01.04).

UNCONTROLLED

6.4 Gauge Calibration

The tensiometer suction pressures are measured using a Bourdon tube gauge. These gauges are calibrated by the manufacturer. Zero adjustment of the gauges may be rechecked after they are taken out of the soil (before the onset of freezing conditions) by placing the ceramic tip in distilled water. The gauge should read zero.

Check, recalibrate, or replace tensiometers when the following circumstances occur:

- The tensiometer has been subject to subfreezing conditions.
- There is evidence of physical damage to the gauge.

Record all calibration information on the Daily Activity Log.

6.5 Freezing Conditions

Before the onset of freezing conditions, remove tensiometers from each site. Unscrew the jet-fill reservoir cap and vacuum dial gauge, clean, and store above freezing conditions. Leave the ceramic tip and body tube in place; they can be used during the next season. Place a plastic cover over the opening of the body tube; leave the PVC casing and cap in place.

6.6 Postoperation Activities

A. Ensure that all equipment is accounted for, decontaminated (SOP-02.07) and ready for shipment (SOP-01.03).

B. Make sure all sampling locations are properly staked and the location ID is readily visible on the location stake.

C. Return the equipment to the equipment manager. Report any malfunction or damage.

D. Deliver all forms to the field team leader.

7.0 REFERENCES

The following procedures are directly associated with this procedure and should be reviewed before field operations:

LANL-ER-SOPs in Section 1.0, General Instructions.
LANL-ER-SOP-02.07, General Equipment Decontamination.

Allmaras, R. R. 1965. "Bias," 24-42. In Methods of Soil Analysis, Agronomy Monograph No. 9, pt. 1. Am. Soc. Agronomy, Madison, WI.

Bouyoucos, G. J. and A. H. Mick. 1940. "An Electrical Resistance Method for the Continuous Measurement of Soil Moisture Under Field Conditions," 172. Michigan Agr. Exp. Sta. Tech. Bull, Ann Arbor, MI.

Bower, H. 1961. "A Double Tube Method for Measuring Hydraulic Conductivity of Soil In-situ Above a Water Table." Soil Sci. Soc. Amer. Proc. 25: 334-39.

Davidson, J. M., D. R. Nielsen, and J. W. Biggar. 1963. "The Measurement and Description of Water Flow through Columbia Silt Loam and Hesperia Sandy Loam," Hilgardia 34: 607-17.

Hillel, D. 1971. Soil and Water Physical Principles and Processes. Academic Press, New York, NY.

Kdohnke, G. 1968. Soil Physics. McGraw-Hill Book Company, New York, NY.

Kirkham, D. and W. L. Powers. 1972. Advanced Soil Physics. Wiley-Interscience, New York, NY.

Krumbein, W. C. and F. A. Graybill. 1965. An Introduction to Statistical Models in Geology, 171-81. McGraw-Hill Book Company, New York, NY.

Morrison, Robert D. 1983. Groundwater Monitoring Technology, Procedures, Equipment and Applications, 1-7.,TIMCO MFG, Prairie Dosac, WI.

UNCONTROLLED

8.0 RECORDS

A. Completed Tensiometer Sampling Field Data Form

B. Record all details including calibration on the Daily Activity Log

9.0 ATTACHMENTS

A. Tensiometer Equipment and Supplies Checklist

B. Component Parts of a Tensiometer

C. Adjusting the Vacuum Gauge Dial

D. Tensiometer Sampling Field Data Form

E. Data Form Completion

F. Filling the Tensiometer Tube by Inducing Vacuum

G. Removing Air from the Tensiometer

UNCONTROLLED

TENSIOMETER EQUIPMENT AND SUPPLIES CHECKLIST

_____ Tensiometer tubes:

Length:		Quantity:
6 inches		____
12 inches	____	____
18 inches	____	____
24 inches	____	____
30 inches	____	____
36 inches	____	____
42 inches	____	____
48 inches	____	____
60 inches	____	____
Other:	____	____

_____ Vacuum dial gauges:

Quantity: ____ Condition: ____

_____ Ceramic tips:

Quantity: ____ Condition: ____

_____ Reservoir fill caps:

Quantity: ____ Condition: ____

_____ Installation equipment:

4-inch soil auger: ____

Insertion tool: ____

1/4-inch soil screen: ____

Vacuum hand pump: ____

Other: _____

_____ Distilled water

Quantity: ____

_____ Tensiometer Sampling Field Data Forms

_____ Daily Activity Logs

_____ Chain-of-Custody/Request for Analysis Forms

_____ Sample Collection Logs

_____ Variance Logs

_____ Custody Seals

_____ Unique Sample Stickers

_____ Sample Labels

_____ Any additional supplies listed in associated procedures, as needed

UNCONTROLLED

COMPONENT PARTS OF A TENSIOMETER

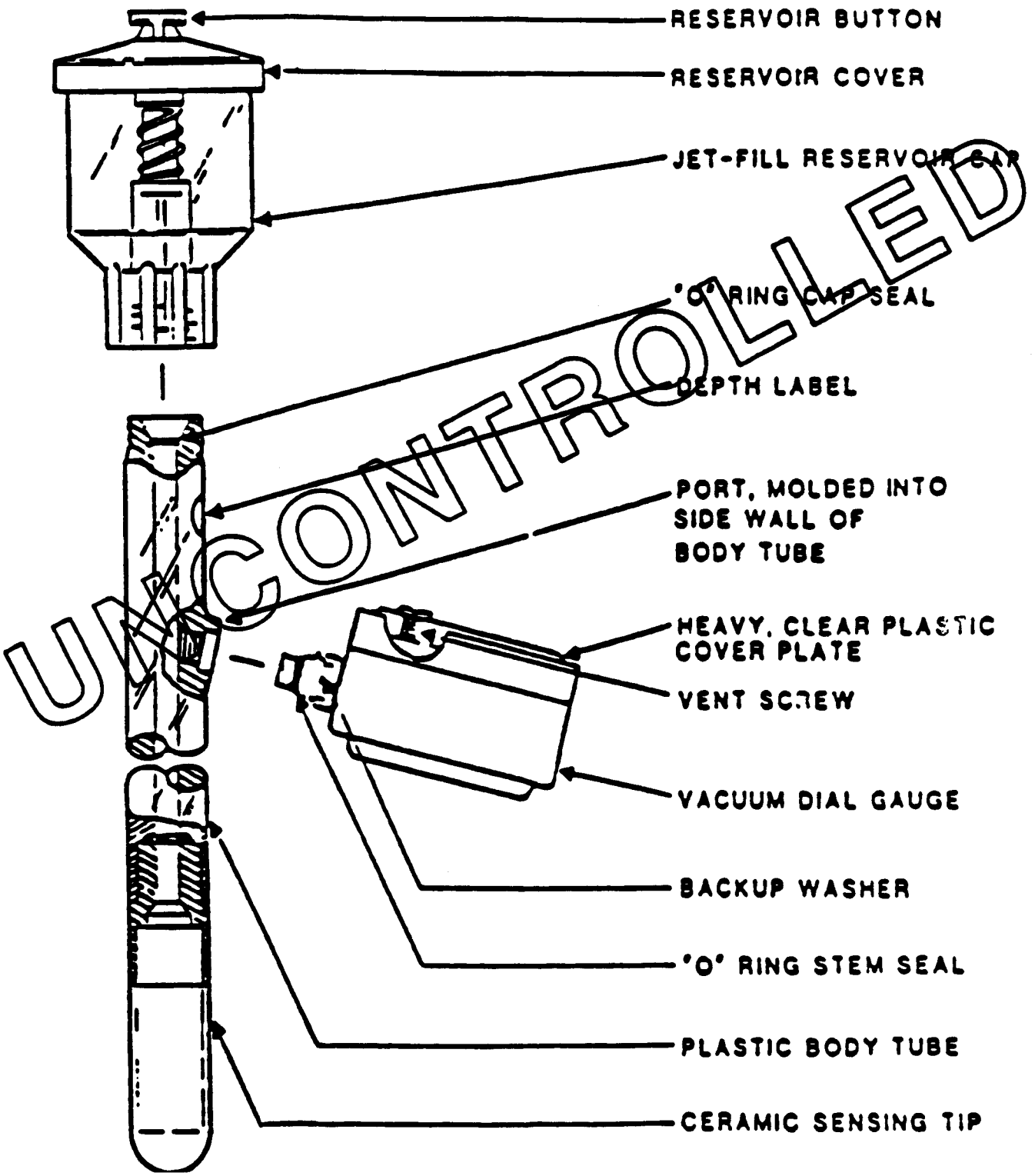

UNCONTROLLED

ADJUSTING THE VACUUM GAUGE DIAL

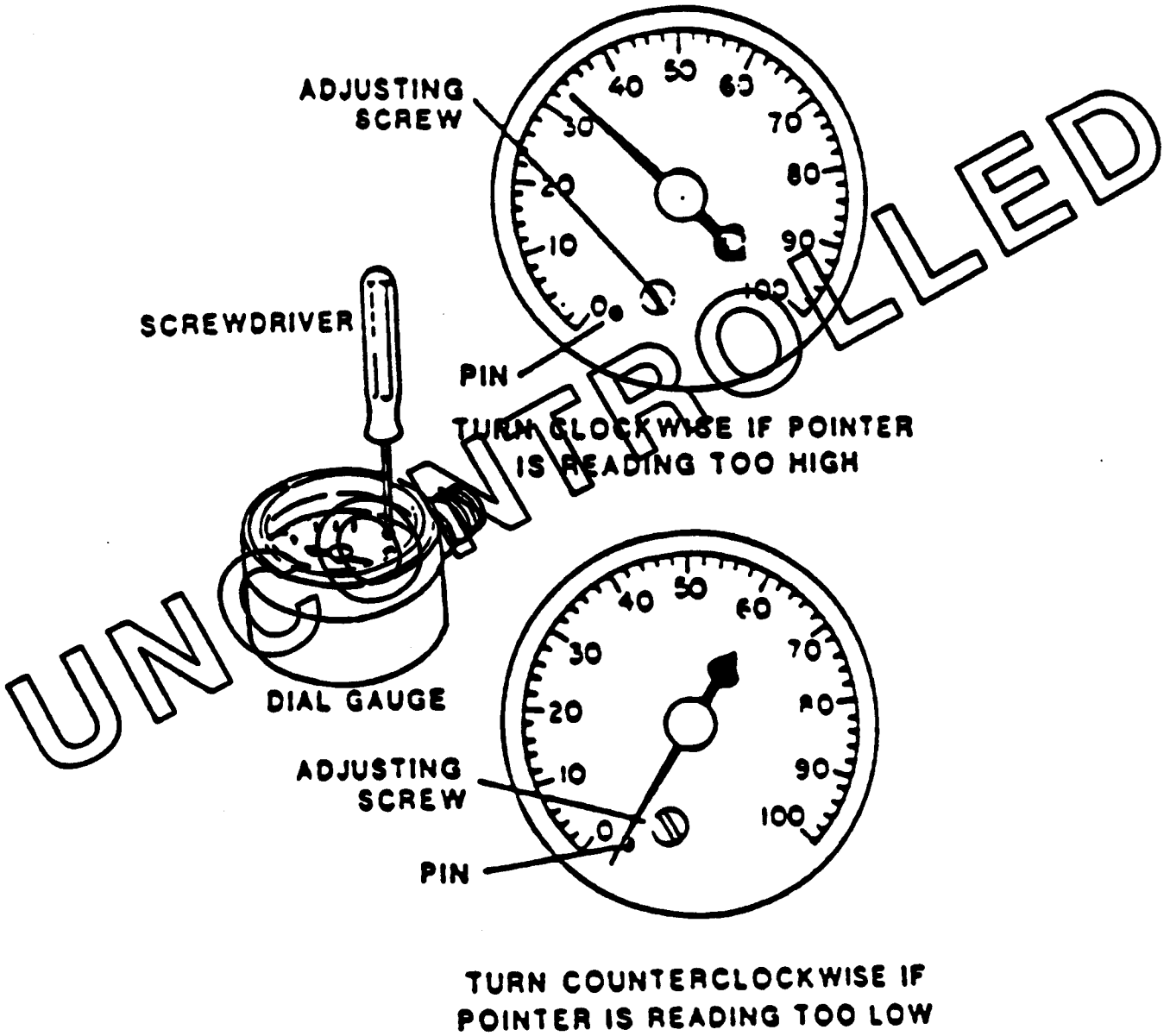

TENSIOMETER SAMPLING FIELD DATA FORM

LOS ALAMOS NATIONAL LABORATORY
ENVIRONMENTAL RESTORATION
TENSIOMETER SAMPLING FIELD DATA

Date: _____ Sheet _____ of _____

Technical Area _____ Operable Unit _____

Site Work Plan: _____

Signature: _____

AFFIX FIRST SAMPLE STICKER HERE

AFFIX LAST SAMPLE STICKER HERE

LOCATION ID OR DESCRIPTION	SAMPLE ID	DEPTH INTERVAL (FT)	PRESSURE POTENTIAL (CENTIBARS)	COMMENTS

UNCONTROLLED
EXAMPLE
CONTACT THE ER PROGRAM OFFICE (665-4557) TO OBTAIN ORIGINAL FOR YOUR USE

COMMENTS: _____

☐ CHECK HERE IF CONTINUED ON BACK OF THIS SHEET

DATA FORM COMPLETION

Use an indelible dark ink pen. Make an entry in each blank. For entry blanks for which no data are obtained, enter UNK for Unknown, NA for Not Applicable, ND for Not Done, etc. To change an entry, draw a single line through it, add the correct information above it, and date and initial the change. For all forms, complete the following information:

TENSIOMETER SAMPLING FIELD DATA FORM (ATTACHMENT D)

1. Technical Area (TA). Two-digit number indicating the TA in which the sampling is being done or sample is being studied.

2. Operable Unit. Four-digit number indicating the Operable Unit in which the sampling is being done or sample is being studied.

3. Sample Identification:

   - If the Daily Activity Log addresses only one sample, attach a sticker from the batch of stickers that match the sticker number on the sample, and line through the box labeled "Attach Last Sample Number Here."

   - If the Daily Activity Log addresses a sequential number of samples, put the first matching sample sticker in the box marked "First" and put the last matching sample sticker in the box marked "Last."

   - If sample identifiers used are not sequential, be sure to affix the lowest sample sticker number in the left box, record the remaining sample identifiers on the form and Daily Activity Log, and line through the "Last" box.

4. Log Date and Time. The date and time when the measurement was made, in the following formats: DD-MMM-YY (e.g., 01-JAN-88), and the 24-hour clock time (e.g., 0837 for 8:37 a.m. and 1912 for 7:12 p.m.).

5. Sheet Number. Number all the sheets that are used for this activity, by day or by some practical unit.

6. Weather and Other Comments. Record all other conditions pertinent to the sample collection in this section on the Daily Activity Log.

7. Depth Interval (ft). The depth from which the soil suction measurement was taken. The depth interval is measured in feet and tenths of feet from the land surface.

8. Pressure Potential (Centibars). The expression of the pressure potential relative to atmospheric pressure. The value for this data field is read directly from the gauge.

UNCONTROLLED

9. Comments. Observations or information concerning the measurement of soil suction at a specific location.

10. Comments. Any additional information.

UNCONTROLLED

FILLING THE TENSIOMETER TUBE BY INDUCING VACUUM

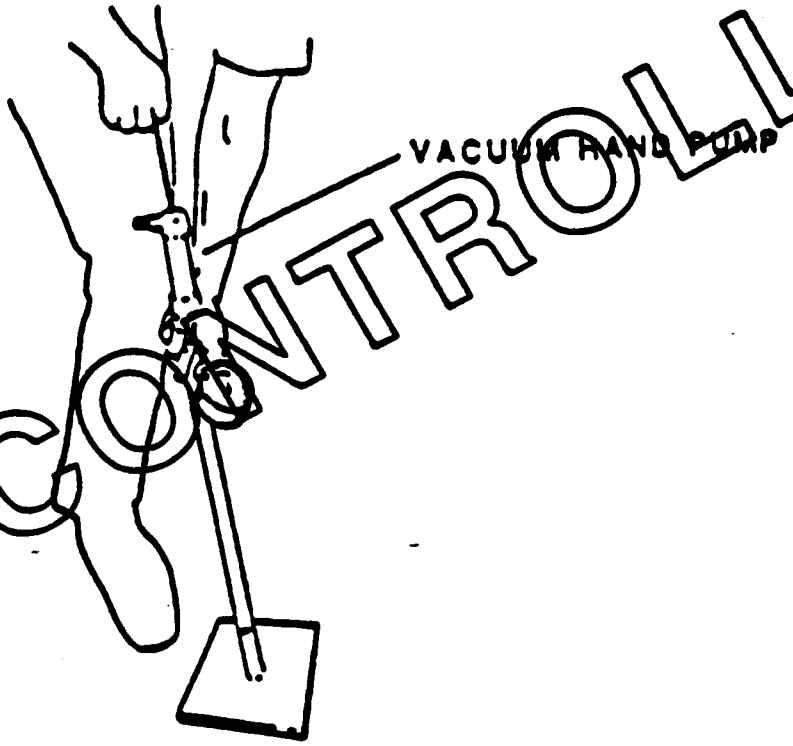

UNCONTROLLED

REMOVING AIR FROM THE TENSIOMETER

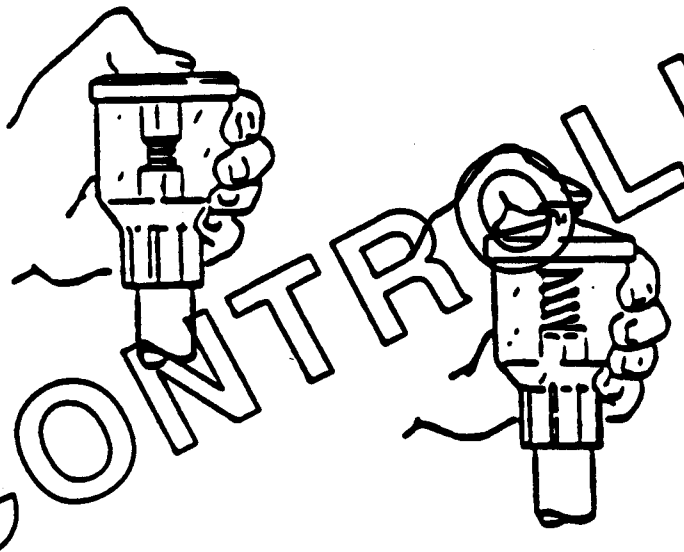

UNCONTROLLED

ENVIRONMENTAL RESTORATION PROGRAM
INTERIM CHANGE NOTICE

EFFECTIVE DATE : (Dist. Date) 2/14/95 ICN No. 007 Page 1 of 1

Document No. LANL-ER-SOP-06.09 **Rev.** 0 **Title:** Spade and Scoop Method of Collection of Soil Samples

Reason for Change:

The form that would be used in the field, The Sample Collection Log Form, is not identified in the Records section.

Description of Change (Specify page, paragraph, and/or section revised, and clearly write new text to be incorporated in the document).

Page 4, Section 8.0, add:
Completed Sample Collection Log Form

UNCONTROLLED

Change Requested by:	PATRICIA M. TILLERY (Print)	Patricia M Tillery (Signature)	1/31/95 (Date)
Technical Reviewer	Linda Fluk (Print)	Linda Fluk (Signature)	1/31/95 (Date)
Program Manager Approval:	(Print)	JORG JANSEN (Signature)	2-3-95 (Date)
Quality Program Project Leaser (QA review and approval)	LAWRENCE A. SOUZA (Print)	(Signature)	2/1/95 (Date)

Los Alamos National Laboratory **Environmental Restoration Program** Standard Operating Procedure	No: LANL-ER-SOP-06.09 Rev: 0

Spade and Scoop Method for Collection of Soil Samples

UNCONTROLLED

	(Print Name)	(Signature)	(Date)
Preparer:	Sandra E. Wagner	Sandra E. Wagner	10-16-91
Quality Review by:	Richard Romero	R. Romero	10/28/91
Technical Review by:	Philip R. Fresquez	Philip R. Fresquez	10/28/91
QPRL Approval:	Karen L Wathen	Karen L Wathen	3/3/92
PM Approval:	Robert W Vocke	Robert W Vocke	3-4-92

Effective Date: 3-16-92

Environmental Restoration Program
INTERIM CHANGE NOTICE

EFFECTIVE DATE (Dist. date) 04/25/94 ICN NO. 004

Document No. LANL-ER-SOP-06.09 Rev 0 Title Spade and Scoop Method of Collection of Soil Samples

Reason for Change

1) The procedure indicates that it is applicable to collection of grab samples, but the procedure also is applicable for composite samples.

2) The procedure does not give specific instruction for the expedient collection of VOC samples.

3) The procedure calls out the use of a form that doesn't exist, and all applicable information is provided on the Sample Collection Form.

Description of Change (Specify page, paragraph, and/or section revised, and clearly write new text to be incorporated in the document.)

1) Page 2, Section 4.0, in the first line after "grab," add: or composite

2) Page 3, Section 6.0. After the text in C, add the following:

   If a sample is being collected for VOC analysis collect this fraction first. Be sure to bottle and cap the sample quickly without homogenizing the soil, and leave no airspace in the sample container, if possible. The cap should have a Teflon™ liner.

3) Page 4, Section 8.0, delete:

   Completed Borehole Log (Soil) Form

UNCONTROLLED

Change requested by	Dave Bradbury (Print)	(Signature)	4/6/94 (Date)
Technical Reviewer	Linda Fluk (Print)	(Signature)	4/5/94 (Date)
Program Manager Approval	DAVID MCINROY (Print)	(Signature)	4/7/94 (Date)
Quality Program Project Leader (QA review and approval)	LAWRENCE A. SOUZA (Print)	(Signature)	4/7/94 (Date)

SPADE AND SCOOP METHOD FOR COLLECTION OF SOIL SAMPLES

Table of Contents

1.0 PURPOSE 2

2.0 SCOPE 2
2.1 Applicability 2
2.2 Training 2

3.0 DEFINITIONS 2

4.0 BACKGROUND AND/OR CAUTIONS 2

5.0 EQUIPMENT 2

6.0 PROCEDURE 3

7.0 REFERENCES 3

8.0 RECORDS 4

9.0 ATTACHMENTS 4

UNCONTROLLED

SPADE AND SCOOP METHOD FOR COLLECTION OF SOIL SAMPLES

1.0 PURPOSE

This procedure describes the spade and scoop method.

2.0 SCOPE

2.1 Applicability

This procedure is applicable for collection of shallow soil samples with a spade and scoop for the Environmental Restoration Program.

2.2 Training

Field team members must document that they have read and understand this procedure, and the procedures in Section 1.0, General Instructions.

3.0 DEFINITIONS

N/A

4.0 BACKGROUND AND/OR CAUTIONS

The "spade and scoop method" is simply digging a hole and collecting a grab sample from the bottom. A spade is recommended because it digs a flatter bottomed-hole than a shovel.

The spade and scoop method will work in any soil type, including cobbles (which will stop a hand auger). If a spade will not work in a given area, an alternate tool must be used. This could be a concrete saw for concrete, a pick-axe for asphalt, a maddox for roots and rocks, or a back hoe or post hole digger for deep holes or hard soil.

Holes deeper than 2 or 3 feet require much labor; a hand auger or back hoe may be more effective.

Proper back care must be exercised when digging. Work gloves may be needed to prevent blisters. Sturdy work boots are needed for pushing the spade into the ground. Goggles are needed when using a maddox, pick-axe, or concrete saw. Personnel are not to enter excavations deeper than 4 feet unless the hole is shored or terraced.

5.0 EQUIPMENT

Equipment required to implement this procedure is listed in Attachment A.

UNCONTROLLED

6.0 PROCEDURE

A. Coordinate the sampling effort with the Sample Coordination Facility (SCF). The SCF will give guidance regarding sample containers, preservation, and shipment to the SCF.

B. Gather and decontaminate the needed supplies and equipment (SOP-02.07, General Equipment Decontamination).

C. Using the most effective tool available, dig to the required depth. Using the scoop, dig down or to the side to undisturbed soil and collect the sample.

D. Label sample containers and complete documentation, (SOP-01.02, Sample Containers and Preservation, and SOP-01.04, Sample Control and Field Documentation).

E. Whenever a sample is collected for chemical analyses, a custody record must be initiated on the Chain-of-Custody/Request For Analysis form and a Sample Label affixed to the sample container. SOP-01.04, Sample Control and Field Documentation, contains copies of the form and label and instructions for completing them.

F. Whenever a sample is collected, complete a description of the sample using the Borehole Log (Soil) form. An example of this form and instructions for completing the form are supplied in SOP-06.12, Soil and Rock Borehole Logging and Sampling Methods. Send all properly prepared samples to the SCF.

G. Decontaminate all equipment per SOP-02.07. Pack samples and ship them to the laboratory (SOP-01.03, Handling, Packaging, and Shipping of Samples). Return all supplies and equipment to their proper storage location.

H. Make sure all sampling locations are properly staked and the location ID is readily visible on the location stake.

7.0 REFERENCES

The following procedures are directly associated with this procedure and should be reviewed before field operations:

LANL-ER-SOPs in Section 1.0, General Instructions.
LANL-ER-SOP-02.07, General Equipment Decontamination.
LANL-ER-SOP-06.12, Soil and Rock Borehole Logging and Sampling Methods.

UNCONTROLLED

8.0 RECORDS

Records generated as a result of this procedure are the completed following:

Completed Borehole Log (Soil) Form
Completed Chain-of-Custody/Request for Analysis Form
Completed Daily Activity Log, including any deviations or other pertinent information

9.0 ATTACHMENTS

Attachment A - Equipment and Supplies Checklist for the Spade and Scoop Method

UNCONTROLLED

EQUIPMENT AND SUPPLIES CHECK LIST FOR THE SPADE AND SCOOP METHOD

_____ Stainless steel or disposable polystyrene (i.e., or other inert material) scoop or lab spoon (scoopulas)

_____ Stainless steel shovel or fat-pointed mason trowel

_____ Stainless steel spade

_____ Tape measure (tenths)

_____ Sturdy work boots

_____ Work gloves

_____ Alternate tool and eye protection (if needed)

_____ Stakes, as appropriate, for identifying sample location

_____ Sledge hammer for driving in stakes

_____ Safety glasses

_____ Teflon™ sheets or stainless steel sampling bowls

_____ Plastic sheet

_____ Alconox

_____ Brushes (long handle, scrub, and wire)

_____ Galvanized tub

_____ Trash bags

_____ Buckets (galvanized, stainless steel, and plastic)

_____ Garden pressure sprayer

_____ Cleaning wipes

_____ Chem wipes

_____ Storage containers for waste decontaminated solutions

_____ Blue ice or equivalent

_____ Disposable laboratory gloves

UNCONTROLLED

EQUIPMENT AND SUPPLIES CHECK LIST FOR THE SPADE AND SCOOP METHOD (continued)

_____ Camera and film

_____ Sample containers and preservatives

_____ Borehole Log (Soil) Form

_____ Daily Activity Logs

_____ Chain-of-Custody/Request for Analysis Forms

_____ Sample Collection Logs

_____ Custody Seals

_____ Unique Sample Stickers

_____ Sample Labels

_____ Any additional supplies listed in associated procedures, as needed

UNCONTROLLED

Los Alamos National Laboratory **Environmental Restoration Program** Standard Operating Procedure	No: LANL-ER-SOP-06.10 Rev: 0

Hand Auger and Thin-Wall Tube Sampler

UNCONTROLLED

	(Print Name)	(Signature)	(Date)
Preparer:	Sandra E. Wagner	Sandra E. Wagner	10-16-91
Quality Review by:	Philip R. Fresquez	Philip R. Fresquez	10-23-91
Technical Review by:	Richard Romero	R. Romero	10/23/91
QPPL Approval:	Karen L Warthen	Karen L Warthen	3/3/92
PM Approval:	Robert W Vocke	Robert W Vocke	3-4-92

Effective Date: 3-16-92

HAND AUGER AND THIN-WALL TUBE SAMPLER

1.0 PURPOSE

This procedure defines a method of collecting subsurface solid samples with a hand auger and thin-wall tube sampler for use in the Environmental Restoration (ER) program.

2.0 SCOPE

2.1 Applicability

These procedures are applicable to personnel using this equipment for sampling for the ER program.

2.2 Training

The field team leader is responsible for monitoring the proper implementation of this procedure. The field team members should be familiar with the equipment and must document they have read and understand this procedure and the procedures in Section 1.0, General Instructions.

UNCONTROLLED

3.0 DEFINITIONS

A. Thin-Wall Tube Sampler: A tool used to collect undisturbed soil samples. The sample is loaded into a stainless steel tube by the tube sampler as it is being collected. The tube is the sample container and cannot be reused. They are generally used in conjunction with a bucket auger. They cannot be used in extremely hard soil.

B. Bucket Auger: A hand auger that can be used for digging or sample collection. Most bucket augers consist of the auger bucket, various length shafts, and a "T" grip handle. All the parts are threaded and screwed together.

4.0 BACKGROUND AND/OR CAUTIONS

Undisturbed soil samples cannot be collected with a bucket auger. Thin-wall tube samplers cannot be used to dig. A subsurface undisturbed soil sample is collected by digging to six inches above the required sample depth with a bucket auger, then collecting the sample with the tube sampler. A composite or disturbed sample can be collected with the bucket auger.

To save time, a manual or powered post hole digger may be used to dig all but the last foot down to the sample depth. The post hole digger must be decontaminated per SOP-02.07. Gasoline must be handled extremely carefully during sampling events involving volatile organic compounds or fuels that are analytes.

Proper back care must be exercised when pulling a stuck auger out of a hole and turning an auger for long periods of time. Work gloves may be needed to prevent blisters.

5.0 EQUIPMENT

Refer to Attachment A for equipment list.

6.0 PROCEDURE

A. Coordinate the sampling effort with the Sample Coordination Facility (SCF). The SCF will give guidance regarding sample containers, preservation, and shipment to the SCF.

B. Gather and decontaminate needed supplies and equipment (SOP-02.07, General Equipment Decontamination).

C. To dig with the bucket auger:

1. Assemble the auger with a 2-, 3-, or 4-foot long shaft. Put 1/2-inch Teflon™ tape on all threads to facilitate disassembly.

2. Press down and turn on the auger, dig down 6 to 12 inches then lift the auger out of the hole and remove the soil from the auger bucket. Experience will show how far one can dig with each auger bucket load and still get the auger out of the hole easily. Repeat until the required depth is reached adding additional shaft sections.

D. To collect a sample with the bucket auger:

1. Dig to 6 inches above the required depth. With a clean auger, dig out enough soil for the sample. Discard any soil you suspect fell down the hole and is not from the required sample depth. Put the sample material in the pan. Continue until the required sample volume is reached, then homogenize the sample and put it into the sample containers (SOP-01.02, Samples, Containers, and Preservation).

2. When collecting a composite sample, keep the pan of soil out of the sun and covered with aluminum foil; collect all the aliquots as quickly as possible; do not decontaminate the auger between aliquots.

3. Whenever a sample is collected for chemical analyses, a custody record must be initiated on the Chain-of-Custody/Request for Analysis form and a Sample Label affixed to the sample container (SOP-01.04, Sample Control and Field Documentation).

4. Whenever a sample is collected, complete a description of the sample using the Borehole Log (Soil) Form. An example of this form and instructions for completing this form are supplied in SOP-06.12, Soil and Rock Borehole Logging and Sampling Methods.

UNCONTROLLED

E. To collect undisturbed samples:

1. Dig to the required depth. Assemble the tube holder with the appropriate tube inside and attach the tube holder to the auger shaft. Use Teflon™ tape on the threads. Shove or pound the tube holder into the ground until it is full. When pounding, use a plastic hammer and use caution so as not to damage the equipment. If the sample is to be from the surface, remove any rocks, sticks or leaves, then drive the sampler into the ground.

2. Disassemble the tube holder being careful not to let any soil fall out of the tube. Cover the ends of the sample tube with 2-inch-wide Teflon™ tape then put plastic caps over the tape. Lable the bottom end of the tube with "open this end."

F. Label sample containers and complete documentation (SOP-01.04).

G. Decontaminate equipment (SOP-02.07). Pack samples and ship them to the SCF (SOP-01.03). Return all supplies and equipment to their proper storage location.

H. General Instructions

1. Refill the hole and restore the sampling area according to instructions provided in the site-specific work plan.

2. Make sure all sampling locations are properly staked and the location ID is readily visible on the location stake.

I. Postsampling activities

1. Ensure that all equipment is accounted for, decontaminated and ready for shipment.

2. Prepare the samples for transport to the SCF per SOP-01.03.

7.0 REFERENCES

The following procedures are directly associated with this procedure and should be reviewed before field operations:

LANL-ER-SOPs in Section 1.0, General Instructions.
LANL-ER-SOP-02.07, General Equipment Decontamination.
LANL-ER-SOP-06.12, Soil and Rock Borehole Logging and Sampling Methods.

ASTM, 1990. "The 1990 Annual Book of ASTM Standards, Volume 04.08 Soil and rock; Dimension Stone; Geosynthetics, "American Society for Testing and Materials.

UNCONTROLLED

DeVera, E. R., B. P. Simmons, R. D. Stephens, and D. L. Storm. 1980. "Samplers and Sampling Procedures for Hazardous Waste Streams." U.S. Environmental Protection Agency report EPA 600/2-80-018, January 1980. U.S. Government Printing Office, Washington, D.C.

8.0 RECORDS

A. Completed Chain-of-Custody/Request for Analysis Form

B. Completed Borehole Log (Soil) Form

C. Record all other pertinent information on the Daily Activity Log.

9.0 ATTACHMENTS

A. Equipment and Supplies Checklist for Sampling Soil with Hand Augers

B. Equipment and Supplies Checklist for Soil Sampling with Thin-Wall Tube Samplers

C. Three Types of Augers

UNCONTROLLED

EQUIPMENT AND SUPPLIES CHECKLIST FOR SAMPLING SOIL WITH HAND AUGERS

UNCONTROLLED

_____ T handle and rod attachments

_____ Auger

_____ Bucket type

_____ Continuous flight

_____ Posthole

_____ Sample container(s)

_____ Decontamination equipment

_____ Sprayer

_____ Distilled water

_____ Scrub brush

_____ Methanol

_____ Disposable laboratory gloves/work gloves

_____ Combustible gas indicator

_____ Portable photoionization detector (PID) or flame ionization detector (FID)

_____ Blue ice or equivalent

_____ Plastic sheet

_____ Any additional supplies listed in associated procedures or health and safety plan, as needed.

_____ Daily Activity Logs

_____ Borehole Log (Soil) Forms

_____ Chain-of-Custody/Request for Analysis Forms

EQUIPMENT AND SUPPLIES CHECKLIST FOR SAMPLING SOIL WITH HAND AUGERS (CONTINUED)

_____ Sample Collection Logs

_____ Variance Logs

_____ Custody Seals

_____ Unique Sample Stickers

_____ Sample Labels

UNCONTROLLED

EQUIPMENT AND SUPPLIES CHECKLIST FOR SOIL SAMPLING WITH THIN-WALL TUBE SAMPLERS.

_____ Paraffin wax

_____ Duct tape

_____ Stove and pan (to heat wax)

_____ Drill rods

_____ T handle

_____ Auger

_____ Disposable laboratory gloves

_____ Combustible gas indicator

_____ Thin-wall tube sampler

_____ Personal protective equipment as specified in site specific Health & Safety Plan

_____ Daily Activity Logs

_____ Borehole Log (Soil) Forms

_____ Chain-of-Custody/Request for Analysis Forms

_____ Sample Collection Logs

_____ Variance Logs

_____ Custody Seals

_____ Unique Sample Stickers

_____ Sample Labels

UNCONTROLLED

THREE TYPES OF AUGERS

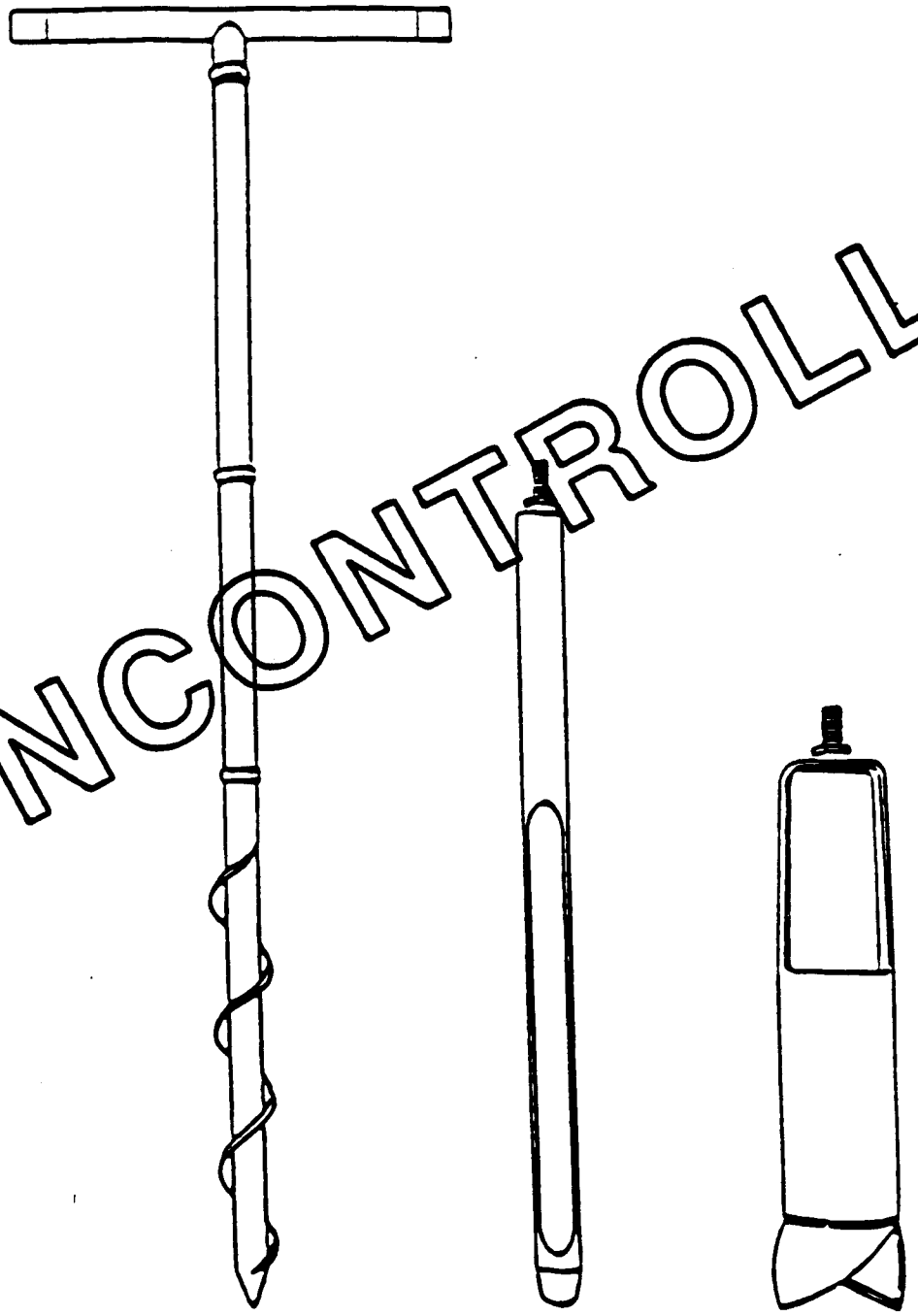

UNCONTROLLED

Los Alamos National Laboratory **Environmental Restoration Program** Standard Operating Procedure	No: LANL-ER-SOP-06.11 Rev: 0

Stainless Steel Surface Soil Sampler

UNCONTROLLED

Preparer: Sandra Wagner (Print Name) Sandra Wagner (Signature) 10-23-91 (Date)

Quality Review by: Richard Romero (Print Name) R. Romero (Signature) 10/28/91 (Date)

Technical Review by: Philip R. Fresquez (Print Name) Philip R. Fresquez (Signature) 10-28/91 (Date)

QPPL Approval: Karen L Worthen (Print Name) Karen L Worthen (Signature) 3/3/92 (Date)

PM Approval: Robert W Vocke (Print Name) Robert W Vocke (Signature) 3-4-92 (Date)

Effective Date: 3-16-92

STAINLESS STEEL SURFACE SOIL SAMPLER

1.0 PURPOSE

This standard operating procedure describes the use of a surface soil ring sampler, for the Environmental Restoration (ER) program.

2.0 SCOPE

2.1 Applicability

This standard operating procedure applies to all personnel who collect surface soil samples for the ER program.

2.2 Training

All field team members involved with this procedure must document that they have read and understand this procedure, and the procedures in Section 1.0, General Instructions.

UNCONTROLLED

3.0 DEFINITIONS

A. Surface Soil Ring Sampler: A sampler constructed of machined stainless steel. It has thin walls but is strong enough to withstand the force of being driven into the ground with a 10-pound drive hammer. The rings are typically 3 to 4 inches in diameter and 2 to 8 inches long.

4.0 BACKGROUND AND/OR CAUTIONS

The surface soil ring sampler is used for undisturbed soil samples or for when accurate or precise control of the collection depth or volume of a soil sample is required.

5.0 EQUIPMENT

Equipment required to implement this procedure is listed in Attachment A.

6.0 PROCEDURE

A. Coordinate the sampling effort with the Sample Coordination Facility (SCF). The SCF will give guidance regarding sample containers, preservation and shipment to the SCF.

B. Gather and decontaminate the necessary supplies and equipment (SOP-02.07, General Equipment Decontamination).

C. Assemble the sampler.

D. Remove any undesired surfical material from the sample location. Drive the sampler into the ground until the top touches the ground surface. Using the gardener's trowel, dig the soil from around the ring. Next, dig a hole beside the ring that is large enough to accomodate the ring sampler trowel. Slide the ring sampler trowel under the ring sampler keeping it tight against the bottom of the ring sampler. With the trowel underneath, lift the ring sampler out of the ground.

E. For the physical analysis of an undisturbed sample, transport the sample in the ring. For chemical analysis break up the sample with the spoon or scoop and containerize it. Consult the SCF and SOP-01.02, Sample Containers and Preservation, for guidance regarding the type of sample container, holding time, and preservation techniques to be used.

F. Label sample containers and complete documentation (SOP-01.04, Sample Control and Field Documentation).

G. Whenever a sample is collected, describe the location and sample using the Location Information and Borehole Log (Soil) forms provided in SOP-06.12.

H. Make sure all sampling locations are properly staked and the sample ID is readily visible on the location stake.

I. Decontaminate the equipment. Pack samples and ship them to the SCF. Return all supplies and equipment to their proper storage location.

UNCONTROLLED

7.0 REFERENCES

The following procedures are directly related to this procedure and should be reviewed before field operations:

LANL-ER-SOPs in Section 1.0, General Instructions.
LANL-ER-SOP-02.07, General Equipment Decontamination.
LANL-ER-SOP-06.12, Soil and Rock Borehole Logging and Sampling Methods.

Soiltest Environmental Division, 1986. "Test Instrumentation and Equipment." Soiltest Environmental Division report, Evanston, IL.

8.0 RECORDS

A. Completed Chain-of-Custody/Request for Analysis Form.

B. Completed Borehole Log (Soil) Form.

C. All pertinent information will be included on the Daily Activities Log found in SOP 01.04.

9.0 ATTACHMENTS

A. Equipment and Supplies Checklist for the Stainless Steel Surface Soil Sampler

UNCONTROLLED

EQUIPMENT AND SUPPLIES CHECKLIST FOR THE STAINLESS STEEL SURFACE SOIL SAMPLER

_____ Stainless steel ring sampler

_____ Stainless steel trowel

_____ Stainless steel sampler top

_____ Drive hammer (3 lbs or 10 lbs)

_____ Gardener's trowel

_____ Plastic sheets or stainless steel sampling trays

_____ Decontamination solutions and distilled water

_____ Brushes (long-handled scrub or wire)

_____ Galvanized tub

_____ Trash bags

_____ Buckets (galvanized, stainless steel, and plastic)

_____ Garden pressure sprayer

_____ Cleaning wipes

_____ Kim wipes

_____ 55-gallon drums

_____ Teflon™ or stainless steel scoop or spoon

_____ Borehole Log (Soil) Forms

_____ Daily Activity Logs

_____ Chain-of-Custody/Request for Analysis Forms

_____ Sample Collection Logs

_____ Variance Logs

_____ Custody Seals

_____ Unique Sample Stickers

_____ Sample Labels

_____ Any additional supplies listed in associated procedures

UNCONTROLLED

Los Alamos National Laboratory **Environmental Restoration Program** Standard Operating Procedure	No: LANL-ER-SOP-06.13 Rev: 0

Surface Water Sampling

UNCONTROLLED

	(Print Name)	(Signature)	(Date)
Preparer:	Sandra E. Wagner	Sandra E. Wagner	10-16-91
Quality Review by:	Philip R. Fresquez	Philip R. Fresquez	10-23-91
Technical Review by:	Richard Romero	Richard Romero	10/24/91
QPPL Approval:	Karen L Warthen	Karen L Warthen	3/3/92
PM Approval:	Robert W Vocke	Robert W Vocke	3-4-92

Effective Date: 3-16-92

SURFACE WATER SAMPLING

1.0 PURPOSE

This procedure describes methods of sampling surface water bodies and documenting all aspects of surface water sample collection.

2.0 SCOPE

2.1 Applicability

This procedure is applicable for collection of surface water samples for the Environmental Restoration program.

2.2 Training

The field team leader and field team members should be familiar with the objectives of surface water sampling at the specific site, and must document that they have read and understand this procedure and the procedures in Section 1.0, General Instructions.

UNCONTROLLED

3.0 DEFINITIONS

A. Surface water samples: Water collected from streams, ponds, lagoons, seeps, springs, rivers, lakes, or other water flowing or impounded at the ground surface comprise surface water samples.

B. Grab samples: A specific location at a given time is represented by a discrete aliquot. The sample is collected all at once and at only one particular point in the sample medium.

4.0 BACKGROUND AND/OR CAUTIONS

The preferred method for collecting surface water samples uses a peristaltic pump. The pump system allows the union of the filtration assembly with the pump and the sample container. In this method, surface samples are filtered if needed, and collected directly with minimal elapsed time. With a peristaltic pump, only inert materials contact the sample. The acceptable tubing is medical grade silicon, which is replaced after every sample.

An alternate method for this sampling is to collect surface water as grab samples. This method involves dipping a breaker, dipper, or other transfer device into the surface water to retrieve samples. The water sample can also be collected directly by dipping the collection bottle into the water and filling, removing, and capping it. This method has several drawbacks, including problems associated with sampling shallow waters like seeps, springs, or shallow streams. The likelihood of extensive air contact during the filtering of a sample and the time lapse before

preservatives are added to samples are also problems. The only advantage of the grab-sample method is the low cost.

Grab samples can also be collected with a transfer device constructed of Teflon™ or stainless steel. The transfer device is used to transfer liquid and liquid wastes from surface waters to a sample bottle. This method prevents unnecessary contamination that would result if the outer surface of the sample bottle were directly immersed in the liquid. In general, field personnel must avoid using metal transfer devices for trace-metal analysis or plastic devices for sampling trace organics.

The transfer device should not be used in sampling situations where aeration must be avoided or significant material could be lost through adhesion to the transfer container.

UNCONTROLLED

5.0 EQUIPMENT

Equipment to implement this procedure is listed on the Equipment and Supplies Checklist (Attachment A).

6.0 PROCEDURE

A. Coordinate the sampling effort with the Sample Coordination Facility (SCF). The SCF will give guidance regarding sample containers, preservation, and shipment to the SCF.

B. Refer to the site work plan to locate the sampling sites along the surface water body and the appropriate decontamination area.

C. Decontaminate all sampling equipment before taking the first sample and between sampling intervals in accordance with SOP-02.07, General Equipment Decontamination.

D. Sample flowing water in an upstream direction, if necessary.

E. If sampling with a peristaltic pump, follow the steps below:

   1. Refer to general discussion of pumps in SOP-06.01, Purging of Wells for Representative Sampling of Groundwater.

   2. Follow steps A through H, in SOP-06.01.

   3. If the depth to the midpoint of the screened interval exceeds 25 feet or it is anticipated that the depth to water will consistently exceed 25 feet during pumping because of low yield, consider an alternate system.

   4. Follow step I in SOP-06.01.

5. Lower intake into the well a short distance below the water level and begin water removal. Lower suction intake to maintain submergence and allow for successive purging of the water column.

6. Follow steps K through O in SOP-06.01.

7. To collect a sample, use the procedure outlined below.

8. Install new peristaltic pump tubing according to the manufacturer's instructions.

9. Place intake end of the tubing into the water to be sampled and turn on pump. Keep the tubing away from the bottom to minimize the amount of sediment collected. Fill the bottles agitating the water as little as possible. To collect filtered samples, connect the appropriate filter to the outlet end of the pump tube. Before collecting filtered samples, run a few hundred millilitres of water through the filter.

10. Label sample containers and complete documentation (SOP-01.02, Sample Containers and Preservation, and SOP-01.04, Sample Control and Field Documentation).

F. If sampling with a transfer device, follow the procedure outlined below.

1. Review the Sampling and Analysis Plan for the appropriate number and size of sample containers and preservatives.

2. Use the transfer device to fill the sample containers slowly. Make sure the sample stream flows gently down the sidewall. For sampling some distance offshore, an extension device might be required. If so, firmly attach the transfer device to the dipper and tighten all bolts.

3. Record the appropriate information on the Chain-of-Custody/Request for Analysis Form (SOP-01.04).

4. Perform field chemistry on raw water, in accordance with SOP-06.02.

5. Record the final, stable readings of pH, specific conductance, and temperature on the Water Quality Sampling Record (Attachment B, of SOP-06.02).

6. If raw water is collected directly into the collection bottle, add preservatives after the sample is collected. Rinse the bottle thoroughly and shake it if a preservative (for example, HNO_3, HCl, or H_2SO_4) has been added.

7. Store the sample immediately according to SOP-01.02.

UNCONTROLLED

6.1 Documentation

A. For each sample collected, record all field measurements and chemistry determinations on the Water Quality Sampling Record. Also, initiate a custody record on the Chain-of-Custody/Request For Analysis form, and affix a Sample Label to the sample container.

6.2 Post Operation Activities

A. Ensure that all equipment is accounted for and decontaminated in accordance with SOP-02.07.

B. Send all samples to the SCF.

C. Place a permanent reference (sampling point) marker (for example, a wooden or metal stake with flagging that includes the location and site code) as close to the sampling location as possible.

7.0 REFERENCES

The following procedures are directly associated with this procedure and should be reviewed before surface water sampling:

LANL-ER-SOPs in Section 1.0, General Instructions.
LANL-ER-SOP-02.07, General Equipment Decontamination.
LANL-ER-SOP-06.01, Purging of Wells for Representative Sampling of Groundwater.
LANL-ER-SOP-06.02, Field Analytical Measurements on Groundwater Samples.

Berg, E. L. 1982. "Handbook for Sampling and Sample Preservation of Water and Wastewaters," U.S. Environmental Protection Agency report EPA/600/4-82/029. U.S. Government Printing Office, Washington, D.C.

EPA. 1979. "Methods of Chemical Analysis of Water and Wastes," U.S. Environmental Protection Agency report EPA-600/4-79-020. U.S. Government Printing Office, Washington, D.C.

Korte, N., and P. Kearl. 1984. "Procedures for the Collection and Preservation of Ground-water and Surface Water Samples and for the Installation of Monitoring Wells," Bendix Field Engineering Corporation Report, Grand Junction, CO.

8.0 RECORDS

The following forms, completed, are the records generated during the use of this procedure:

A. Water Quality Sampling Record

UNCONTROLLED

B. Chain-of-Custody/Request for Analysis Form

C. Daily Activity Log, if appropriate

9.0 ATTACHMENTS

A. Equipment and Supplies Checklist for Surface Water Sampling

B. Water Chemistry Checklist

UNCONTROLLED

EQUIPMENT AND SUPPLIES CHECKLIST FOR SURFACE WATER SAMPLING

_____ Peristaltic pump

_____ Filtration unit

_____ Teflon™ bore and fittings

_____ Clean filters and prefilters

_____ Transfer device for grab samples

_____ 2- or 5-gallon carboy container

_____ Wooden stakes

_____ Survey flagging

_____ Plastic or Teflon™ bucket

_____ Stopwatch

_____ Sample containers and preservatives

_____ Blue Ice or equivalent

_____ Any additional supplies listed in associated procedures, as needed

_____ pH and conductivity meter

_____ Disposable gloves if handling acidified sample containers

_____ Safety glasses/splash guard

_____ Water Quality Sampling Records

_____ Daily Activity Logs

_____ Chain-of-Custody/Request for Analysis Forms

_____ Sample Collection Logs

_____ Variance Logs

UNCONTROLLED

EQUIPMENT AND SUPPLIES CHECKLIST FOR SURFACE WATER SAMPLING (Continued)

_____ Custody Seals

_____ Unique Sample Stickers

_____ Sample Labels

_____ Any additional supplies listed in associated procedures, as needed

UNCONTROLLED

WATER CHEMISTRY CHECKLIST

Complete all blanks before going to the field

_____ Reagents: Alkalinity kit

- _____ Check reagent volumes
- _____ Check glass for breakage

_____ pH meter(s) (circle one)

- _____ Electrode full of fluid
- _____ Electrode glass intact
- _____ Immerse electrode in tap water
- _____ Calibrate electrode, rinse, fill, and replace cap
- _____ Temperature probe in tap water
- _____ Temperature probe in hot water

_____ EC meter

- _____ Battery: OK _____ Dead ____
- _____ Tap water: OK ____ Faulty ____
- _____ Against calibration solution
- _____ Solution temp
- _____ Conductivity of solution

_____ Hand-held thermometer

- _____ Temperature in ice water
- _____ Temperature agrees with lab thermometer

_____ KCl solutions

_____ Filters and tubing

_____ Flow-through bath

UNCONTROLLED

LOS ALAMOS

ENVIRONMENTAL RESTORATION PROGRAM INTERIM CHANGE NOTICE

EFFECTIVE DATE : (Dist. Date) 3/10/95 ICN No. 9 Page 1 of 1

Document No. LANL-ER-SOP-6.14 **Rev.** 0 **Title:** Sediment Material Collection

Reason for Change:

The procedure does not include a tool used in the field to collect sludge/sediment samples.

Description of Change (Specify page, paragraph, and/or section revised, and clearly write new text to be incorporated in the document).

Page 1, Section 4.0, after last paragraph on page 1 add new paragraph.

The scoop sampler technique is scoop method. The scoop portion can be a plastic beaker, jar, or other cup-type holder, which is secured to a long or extension handle by a metal cage. Usually, this sampler is constructed by field team members to meet the field requirements. The scoop sampler can be used for such things as taking samples from a septic tank or taking lagoon sludge samples from a rowboat.

Page 5, Section 6.0, add the following text

The field project leader is responsible for transmitting the sampling records to the Records Processing Facility.

Page 9, Attachment D

Add scoop sampler to the checklist.

UNCONTROLLED

Change Requested by:	NANCY NESS (Print)	Nancy Ness (Signature)	2/13/95 (Date)
Functional Reviewer	Tracy McFarland (Print)	Tracy L. McFarland (Signature)	2/13/95 (Date)
Program Manager Approval:	JORG JANSEN (Print)	[illegible] (Signature)	2-17-95 (Date)
Quality Program Project Leader (QA review and approval)	LARRY SOUZA (Print)	L. R. Souza (Signature)	2/17/95 (Date)

J95030.FRM

Los Alamos National Laboratory **Environmental Restoration Program** Standard Operating Procedure	No: LANL-ER-SOP-06.14 Rev: 0

Sediment Material Collection

UNCONTROLLED

	(Print Name)	(Signature)	(Date)
Preparer:	Sandra E. Wagner	Sandra E. Wagner	10-16-91
Quality Review by:	Alan Stoker	[illegible]	12/10/91
Technical Review by:	Richard Romero	R Romero	10/23/91
QPPL Approval:	Karen L Kirkthen	Karen L Kirkthen	3/3/92
PM Approval:	Robert W Vocke	Robert W Vocke	3-4-92

Effective Date: 3-16-92

SEDIMENT MATERIAL COLLECTION

1.0 PURPOSE

This procedure describes four basic methods of sediment sample collection.

2.0 SCOPE

2.1 Applicability

This procedure is applicable to all personnel who are involved in sediment material collection for the Environmental Restoration program.

2.2 Training

All field team members involved with the sediment material collection must document that they have read and understand this procedure, as well as the procedures in Section 1.0, General Instructions.

UNCONTROLLED

3.0 DEFINITIONS

A. Sediments: Particles derived from rocks or biological materials that have been transported by a fluid. Sediments include solid matter (sludges) suspended in or settled from water.

B. Composite samples: Nondiscrete samples composed of more than one specific aliquot collected at various locations or at different times. Analyzing this type of sample produces an average value for the locations or time period covered by sampling.

4.0 BACKGROUND AND/OR CAUTIONS

Sediments may be watery with no cohesion and low viscosity or they may be compacted semi-solids where water is a small part of the mass. The sediment to be sampled may be many feet down at the bottom of a lake or river or it may be exposed in a dry stream bed. Because of such differences, a variety of sampling methods and equipment may be required.

Scoops and trowels provide simple, quick, and easy means of collecting a sample of a sludge or sediment. Hand corers (Attachment A) are applicable to the same situations and materials; and they have the further advantage of collecting an undisturbed sample that can profile any stratification in the sample caused by changes in the deposition. Some hand corers can be fitted with extension handles that will allow the collection of samples underlying a shallow layer of liquid. Most hand corers can also be adapted to hold liners made of brass or polycarbonate plastic. Care should be taken to choose a material that will not compromise the intended analytical procedures.

A gravity corer (Attachment B) is a metal tube with a replaceable tapered nosepiece on the bottom and a ball or other type of check valve on the top. The check valve allows water to pass through the corer on descent but prevents washout during recovery. The tapered nosepiece facilitates cutting and reduces core disturbance during penetration. Most corers are constructed of brass or steel, and many can accept plastic liners and additional weights.

Corers are capable of collecting samples of most sludges and sediments. The corers collect essentially undisturbed samples that represent the profile of strata that may develop in sediments and sludges during variations in the deposition process. Depending on the density of the substrate and the weight of the cores, penetration to depths of 75 cm (30 inches) can be attained. Care should be exercised when using gravity corers in vessels or lagoons that have liners, because penetration depths could exceed depth of substrate and result in damage to the liner material.

The Ponar grab (Attachment C) is a clamshell-type scoop activated by a counter-lever system. The shell is opened, latched in place, and slowly lowered to the bottom. When tension is released on the lowering cable, the latch releases and the lifting action of the cable on the lever system closes the clamshell.

Sediments from large surface water bodies such as streams and lakes may be taken with Ponar grab samplers from a boat. Ponar grab samplers are more applicable to a wide range of sediments and sludges because they penetrate deeper and seal better than spring activated types (e.g., Eckman dredges). Refer to equipment operations manual for use of the sampler.

Ponars are capable of sampling most types of sludges and sediments from silts to granular materials. One version has a 232-square-centimeter sample area that is light enough to be operated without a winch or crane. Penetration depths will usually not exceed several centimeters. Grab samplers are not capable of collecting undisturbed samples. As a result, material in the first centimeter of sludge cannot be separated from that at lower depths. The sampling action of these devices causes agitation currents that may temporarily resuspend some settled solids. This disturbance can be minimized by slowly lowering the sampler the last half-meter and by allowing a very slow contact with the bottom. It is advisable, however, to collect sludge or sediment samples only after all overlying water samples have been obtained.

UNCONTROLLED

5.0 EQUIPMEMT

Equipment required to implement this procedure is listed in Attachment D, Equipment and Supplies Checklist.

6.0 PROCEDURE

6.1 Sludge or sediment sampling using scoops or trowels

A. Insert a decontaminated scoop or trowel into material and remove sample. In the case of sludges exposed to air, it may be desirable to remove the first 1 to 2 cm of material

prior to collecting sample. Record any pertinent information, e.g., location, sample size, on the Daily Activity Log (SOP-01.01.01, Records).

B. If compositing a series of grab samples, use a decontaminated glass or stainless steel mixing bowl or Teflon™ tray for mixing.

C. Transfer sample into an appropriate sample container.

6.2 Sludge or sediment sampling using a hand corer

A. Push corer into material with smooth continuous motion, twist, then withdraw in a single smooth motion. Record any pertinent information in the Daily Activity Log.

B. Remove sample and place in an appropriate container.

6.3 Sediment and sludge sampling using a gravity corer:

A. Attach a precleaned corer to the required length of sample line. Solid braided 5 mm (3/16 inch) nylon line is sufficient; 20 mm (3/4 inch) nylon, however, is easier to grasp during hand hoisting.

B. Measure and mark distance to top of sludge on sampler line to determine depth of sludge or sediment coring.

C. Allow corer to free fall through liquid to bottom.

D. Determine depth of sludge penetration. Depending on the hardness and depth of the sediment and the weight and diameter of the corer, the corer may penetrate too far or not far enough. The amount of weight on the corer may need to be changed. Trial and error is required to find the correct weight for any given situation.

E. Retrieve corer with a smooth, continuous lifting motion. Do not bump corer because this may result in some sample loss.

F. Remove sample and place in an appropriate container. Record any pertinent information in the Daily Activity Log.

6.4 Sediment and sludge sampling using a Ponar grab sampler

A. Attach a decontaminated Ponar to the necessary length of sample line.

B. Measure and mark the distance to top of sludge on the sample line. Record depth to top of sludge and depth of sludge penetration in the Daily Activity Log.

UNCONTROLLED

C. Open sampler jaws until latched. From this point on, support the sampler by its lift line, or the sampler will be tripped and the jaws will close.

D. Begin lowering the sampler until the proximity mark is reached.

E. Use a slow rate of descent through last meter until contact is felt.

F. Allow sample line to slack several centimeters. In strong currents, more slack may be necessary to release mechanism.

G. Slowly raise sampler clear of surface.

H. Remove sample and place in an appropriate container.

6.5 Postoperation Activities

A. Label samples and complete sample documentation (SOP-01.04, Sample Control and Documentation).

B. Prepare the samples for shipping (SOP-01.03, Handling, Packaging, and Shipping of Samples).

C. Ensure that all equipment is accounted for, decontaminated (SOP-02.07, General Equipment Decontamination), and ready for shipment.

UNCONTROLLED

7.0 REFERENCES

The following procedures are directly associated with this procedure and should be reviewed before sediment sample collections:

LANL-ER SOPs in Section 1.0, General Instructions.
LANL-ER SOP-02.07, General Equipment Decontamination.

DeVera, E. R., B. P. Simmons, R. D. Stephens, and D. L. Storm. "Samplers and Sampling Procedures for Hazardous Waste Streams." EPA 600/2-80-018. January 1980.

Environmental Monitoring System Laboratory (EMSL), ORD, U.S. Environmental Protection Agency. *Characterization of Hazardous Waste Sites--A Method Manual, Volume II--Available Sampling Methods.* 1983. Las Vegas, NV.

Lind, Orent. *Handbook of Common Methods of Limnology.* C.V. Mosby Co., 1974. St. Louis, MO.

OWDC, U.S. Geological Survey, U.S. Department of the Interior. *National Handbook of Recommended Methods for Water-Data Acquisition.* Prepared cooperatively by agencies of the U.S. Government, Reston, VA. 1977.

Smith, R., and G.V. James. *The Sampling of Bulk Materials.* London: The Royal Society of Chemistry. 1981.

8.0 RECORDS

A. Completed Daily Activity Log which will include all pertinent information, e.g., location, sample size, and comments

B. Completed Chain-of-Custody/Request for Analysis Form

9.0 ATTACHMENTS

A. Diagram of Hand Corer

B. Diagram of Gravity Corer

C. Diagram of Ponar Grab Sampler

D. Equipment and Supplies Checklist

UNCONTROLLED

DIAGRAM OF HAND CORER

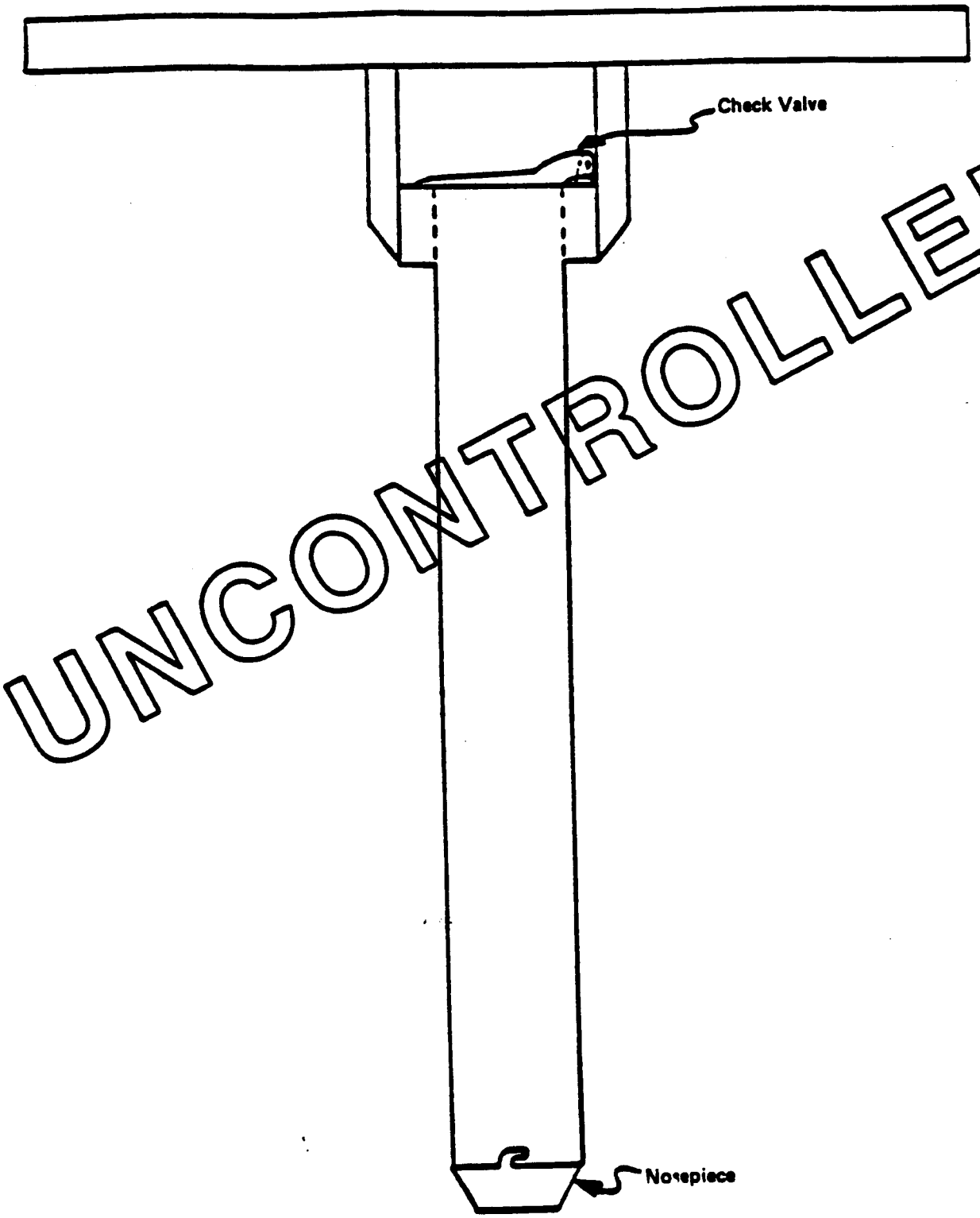

UNCONTROLLED

DIAGRAM OF GRAVITY CORER

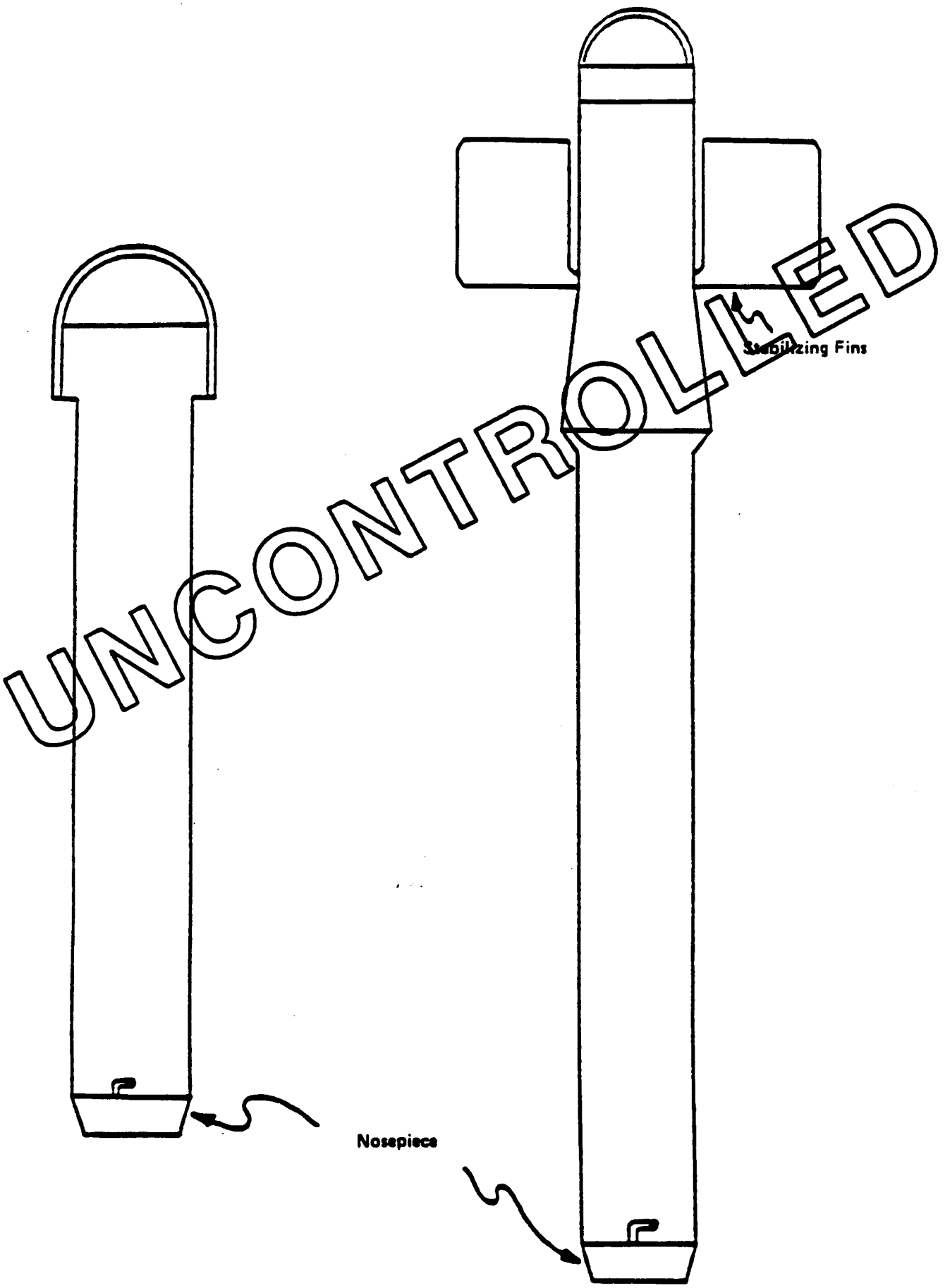

UNCONTROLLED

DIAGRAM OF PONAR GRAB SAMPLER

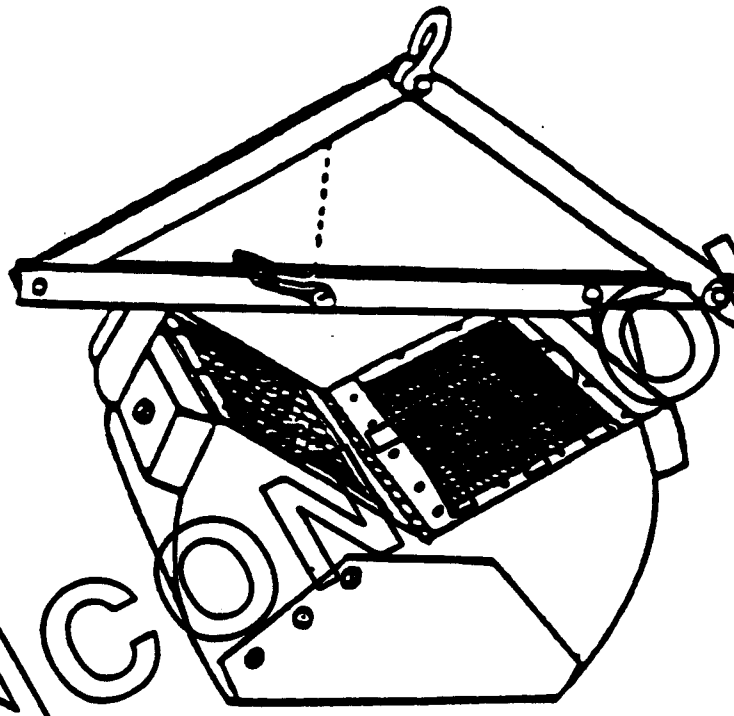

UNCONTROLLED

EQUIPMENT AND SUPPLIES CHECKLIST

_____ Hand Corer or
_____ Gravity Corer or
_____ Ponar Grab Sampler or
_____ Trowel or
_____ Scoop
_____ Operations manuals
_____ Bowl
_____ Tray
_____ Sample containers
_____ Rope (Review well depths prior to purchase)
_____ Protective gloves
_____ Life jacket
_____ Tape measure

UNCONTROLLED

Los Alamos National Laboratory **Environmental Restoration Program** Standard Operating Procedure	No: LANL-ER-SOP-06.15 Rev: 0

Coliwasa Sampler for Liquids and Slurries

UNCONTROLLED

	(Print Name)	(Signature)	(Date)
Preparer:	Sandra E. Wagner	Sandra E. Wagner	10-16-91
Quality Review by:	Philip R. Fresquez	Philip R. Fresquez	10-23-91
Technical Review by:	Juan Corpion	J. Thayman	11/19/91
QPPL Approval:	Karen L Warthen	Karen L Warthen	3/3/92
PM Approval:	Robert W Vocke	Robert W Vocke	3-4-92

Effective Date: 3-16-92

COLIWASA SAMPLER FOR LIQUIDS AND SLURRIES

1.0 PURPOSE

This procedure describes the use of the Coliwasa sampler for obtaining samples of free-flowing liquids and slurries in tanks, drums, pits, and similar containers.

2.0 SCOPE

2.1 Applicability

This procedure is applicable to all field team members using the Composite Liquid Waste Sampler (Coliwasa) of free flowing liquid and slurries in tanks, drums, pits, and similar containers for the Environmental Restoration program.

2.2 Training

The field team members should be familiar with the waste sampling objectives and must document that they have read and understand this procedure as well as the procedures in Section 1.0, General Instructions.

UNCONTROLLED

3.0 DEFINITIONS

N/A

4.0 BACKGROUND AND/OR CAUTIONS

The Coliwasa is designed to collect liquid hazardous waste. It permits the representative sampling of multiphase wastes of a wide range of viscosity, corrosivity, volatility, and solids content. Its simple design makes it easy to use and allows the rapid collection of samples, thus minimizing the exposure of the sample collector to potential hazards from the waste. The sampler is commercially available, as either a reuseable or disposable unit, but is relatively easy and inexpensive to fabricate. The cost of fabrication is low enough that the contaminated parts may be discarded after a single use when they cannot be easily cleaned. The use of disposable units decreases the likelihood of cross-contamination.

The main parts of the Coliwasa consist of the sampling tube, the stop-cock, and the closure system. (See Attachment A for example.) The sampling tube consists of a 5-foot (1.52-m) by 1 5/8-inch (4.13-cm) I.D. translucent plastic pipe; usually polyvinyl chloride (PVC), PTFE or borosilicate glass plumbing tube.

Coliwasas are constructed of either plastic or glass. The plastic type consists of a translucent plastic sampling tube. The glass Coliwasa uses borosilicate glass plumbing pipe as the sampling tube.

The plastic Coliwasa is used to sample most containerized liquid wastes except wastes that contain ketones, nitrobenzene, dimethylforamide, mesityl oxide, and tetrahydrofuran.

The glass Coliwasa is used to sample all other containerized liquid wastes that cannot be sampled with the plastic Coliwasa except strong alkali and hydrofluoric acid solutions.

The Coliwasa sampler has the following limitations:

- Not suitable for sampling in containers over 5 feet (1.5-m) deep
- Cannot be used for sampling hydrofluoric acid and concentrated alkali solutions.

Site workers preparing for field operations should read and understand the procedures outlined in LANL-ER-SOPs, Section 2.0, Health and Safety in the Field. In addition, site workers should refer to site-specific Operable Unit Health and Safety plans for the particular health and safety equipment to be used.

UNCONTROLLED

5.0 EQUIPMENT

See Attachment B, Equipment and Supplies Checklist, for a list of equipment required to implement this procedure.

6.0 PROCEDURE

A. Assemble the necessary equipment and appropriate protective clothing.

B. Pack and transport the equipment to the site.

C. Decontaminate all equipment per the instructions in SOP-02.07, General Equipment Decontamination.

D. For drum and containerized liquid sampling perform the following procedure.

   1. Open unknown drums using a remote drum opening device when possible.

      Note: A bulging container indicates pressure and should receive special handling.

   2. Draw the sample from the bung openings whenever possible.

E. Insert the Coliwasa into the desired liquid phase to be sampled and obtain the sample.

F. Transfer the sample from the Coliwasa to the sample container.

G. Decontaminate reusable samplers before reuse, or use a new sampler to ensure no contamination or cross-contamination.

H. Repeat steps D through G until all samples have been collected.

I. For drum and containerized materials, reclose the container.

6.1 Documentation

A. Complete Containerized Waste Sampling Forms (Attachment C). Use the Daily Activity Log from SOP-01.04, for additional comments if necessary.

B. Complete other applicable sample forms and labels.

6.2 Post Sampling Activities

A. Ensure all equipment is accounted for, decontaminated per SOP-02.07 or disposed of properly, and ready for transport.

B. Make sure all sampling locations are properly documented.

C. Package all samples for transport to the Sample Coordination Facility (SCF) per SOP-01.03, Handling, Packaging, and Shipping of Samples. All sampling efforts must be coordinated with the SCF.

D. Return the equipment to the equipment manager. Report any malfunction or damage.

E. Deliver all forms to the field team leader.

UNCONTROLLED

7.0 REFERENCES

The following procedures are directly associated with this procedure and should be reviewed before field operations:

LANL-ER-SOPs in Section 1.0, General Instructions.
LANL-ER-SOPs in Section 2.0, Health and Safety in the Field.

EPA. November 1986, "Test Methods for Evaluating Solid Waste," Vol. II: Field Manual Physical/Chemical Methods, Officer of Solid Waste and Emergency Response, Washington D.C.

8.0 RECORDS

A. Completed Containerized Waste Sampling Form

B. Completed Chain-of-Custody/Request for Analysis Form

C. Daily Activity Log containing deviations along with any other pertinent information

9.0 ATTACHMENTS

A. Example of one type of Coliwasa

B. Equipment and Supplies Checklist

C. Containerized Waste Sampling Form

D. Data Form Completion

UNCONTROLLED

EXAMPLE OF ONE TYPE OF COMPOSITE LIQUID WASTE SAMPLER (Coliwasa)

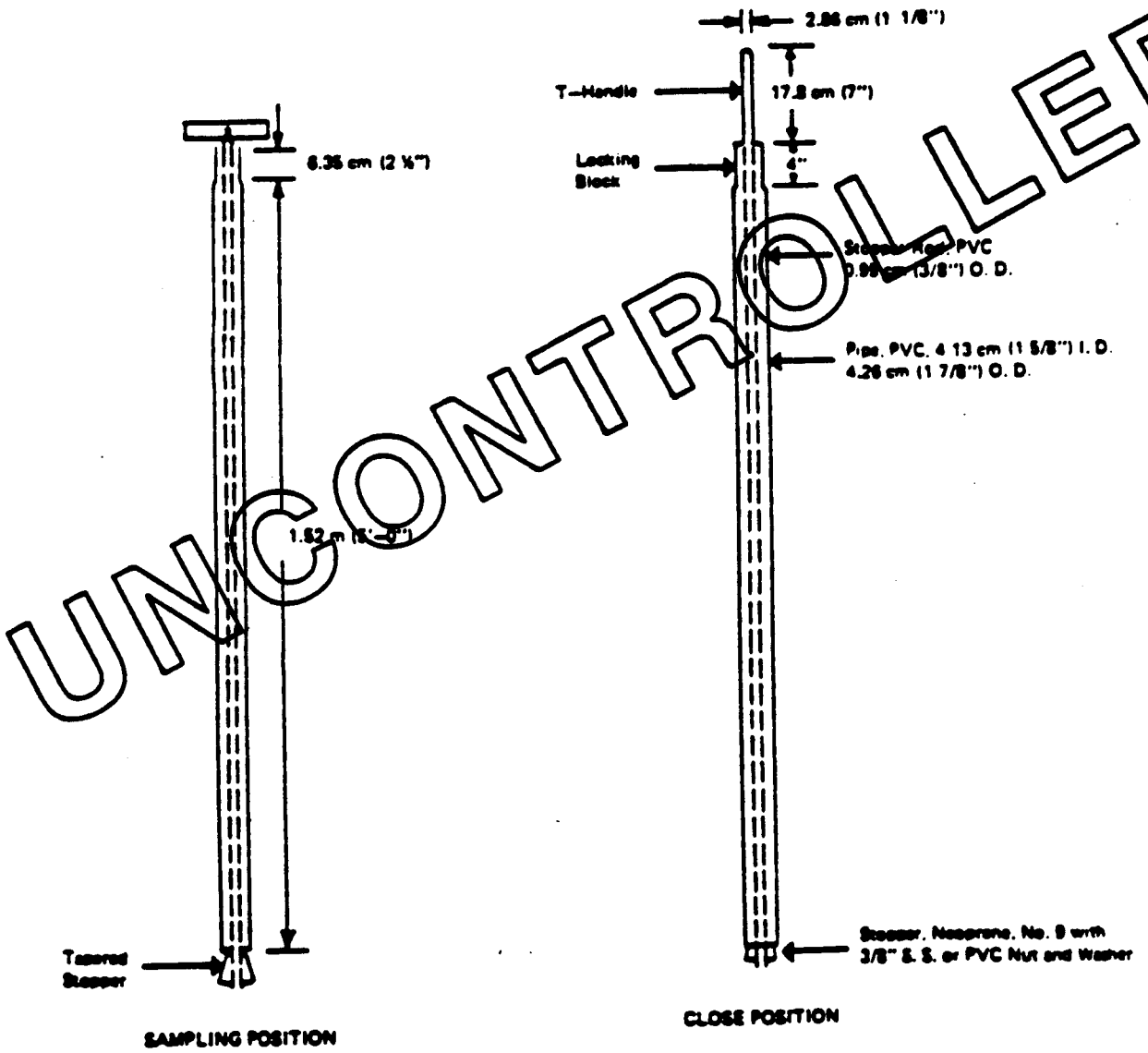

UNCONTROLLED

EQUIPMENT AND SUPPLIES CHECKLIST FOR USING A COLIWASA SAMPLER FOR LIQUIDS AND SLURRIES

_____ Coliwasa

_____ Protective clothing

_____ Remote drum opening device

_____ Sample containers

_____ Daily Activities Logs

_____ Containerized Waste Sampling forms

_____ Chain-of-Custody/Request-for-Analysis forms

_____ Sample collection logs

_____ Variance logs

_____ Custody seals

_____ Unique Sample Stickers

_____ Sample Labels

UNCONTROLLED

CONTAINERIZED WASTE SAMPLING RECORD

LOS ALAMOS NATIONAL LABORATORY
ENVIRONMENTAL RESTORATION
CONTAINERIZED WASTE SAMPLING RECORD

Date: _____ Sheet _____ of _____

Technical Area _____ Operable Unit _____

Site Work Plan: _____

Signature: _____

AFFIX FIRST SAMPLE STICKER HERE

AFFIX LAST SAMPLE STICKER HERE

Sampling Period: Start _____ End _____

Sampling Method: ___ Coliwasa ___ Weighted Bottle ___ Trier
___ Thief ___ Hand Auger

Waste Container Information:

Total Number of Containers _____
Type _____
Volume _____
Origin _____
Markings _____
Labels _____
Other Identification _____
Color _____
Condition _____

Sample Matrix:

___ Liquid/Slurry
___ Sludge
___ Oil
___ Other (Describe)
_____
_____

___ Sand
___ Packed Powder/Granules
___ Dry Powder/Granules
___ Moist Powder/Granules

COMMENTS: _____

☐ CHECK HERE IF CONTINUED ON BACK OF THIS SHEET

ER-SOP-06.15, R0 5/01

EXAMPLE
UNCONTROLLED
CONTACT THE PROGRAM OFFICE FOR MASTER FORMS

DATA FORM COMPLETION

Use an indelible dark ink pen. Make an entry in each blank. For entry blanks for which no data are obtained, enter UNK for Unknown, NA for Not Applicable, or ND for Not Done. To change an entry, draw a single line through it, add the correct information above it, and date and initial the change. For all forms, complete the following information:

CONTAINERIZED WASTE SAMPLING RECORD (ATTACHMENT B)

1. Technical Area (TA). Two-digit number indicating the TA in which the sampling is being done or sample is being studied.

2. Operable Unit. Four-digit number indicating the operable unit in which the sampling is being done or sample is being studied.

3. Sample Identification:

   - If the Daily Activity Log addresses only one sample, attach a sticker from the batch of stickers that match the sticker number on the sample, and line through the box labeled "Attach Last Sample Number Here."

   - If the Daily Activity Log addresses a sequential number of samples, put the first matching sample sticker in the box marked "First" and put the last matching sample sticker in the box marked "Last."

   - If sample identifiers used are not sequential, affix the lowest sample sticker number in the left box, record the remaining sample identifiers on the form and Daily Activity Log, and line through the "Last" box.

4. Log Date and Time. The date and time when the measurement was made, in the following formats: DD-MMM-YY (e.g., 01-JAN-88), and the 24-hour clock time (e.g., 0837 for 8:37 a.m. and 1912 for 7:12 p.m.).

5. Sheet Number. Number all the sheets that are used for this activity, by day or by some practical unit.

6. Weather and other comments. Record all other conditions pertinent to the sample collection in this section on the Daily Activity Log in SOP-01.04.

UNCONTROLLED

Los Alamos National Laboratory **Environmental Restoration Program** Standard Operating Procedure	No: LANL-ER-SOP-06.16 Rev: 0

Thief Sampler for Dry Powders or Granules

UNCONTROLLED

	(Print Name)	(Signature)	(Date)
Preparer:	Sandra E. Wagner	Sandra E. Wagner	10-16-91
Quality Review by:	Philip R. Fresquez	Philip R. Fresquez	10-23-91
Technical Review by:	Juan Corpion	[illegible]	11/19/91
QPPL Approval:	Karen L Warthen	Karen L Warthen	3/3/92
PM Approval:	Robert W Vocke	Robert W Vocke	3-4-92

Effective Date: 3-16-92

THIEF SAMPLER FOR DRY POWDERS OR GRANULES

1.0 PURPOSE

This procedure describes the method for using the Thief sampler for dry powders or granules.

2.0 SCOPE

2.1 Applicability

This method is applicable to all site workers using the Thief sampler for dry powders or granules for the Environmental Restoration program.

2.2 Training

The site worker should be familiar with the sampling equipment and must document that he has read and understands this procedure as well as the procedures in Section 1.0, General Instructions.

UNCONTROLLED

3.0 DEFINITIONS

N/A

4.0 BACKGROUND AND/OR CAUTIONS

Thief samplers are used for low volume sampling of dry solid waste materials in bags, fiber drums, sacks, or similar containers. This sampler is most useful when the solids are no greater than 1/2 inch (0.6 cm) in diameter or no larger than one-third the width of the slots. A diagram of the Thief sampler is in Attachment A.

The Thief sampler consists of two slotted concentric tubes, usually made of stainless steel or brass. The outer tube has a conical pointed tip that permits the sampler to penetrate the material being sampled. The inner tube is rotated to open and close the sampler. Thief samplers are usually 24 to 100 inches (60 to 100 cm) long by 1/2 to 1 inch (1.27 to 2.54 cm) in diameter.

Site workers preparing for field operations should read and understand the procedures outlined in LANL-ER-SOPs, Section 2.0, Health and Safety in the Field. In addition, site workers should refer to site-specific Operable Unit Health and Safety plans for the particular health and safety equipment to be used.

NOTE: The Thief sampler is not desirable for moist or sticky samples.

5.0 EQUIPMENT

Equipment to implement this procedure is shown in Attachment B.

6.0 PROCEDURE

A. Coordinate sampling effort with Sample Coordination Facility.

B. Assemble the necessary equipment.

C. Decontaminate all equipment prior to beginning and after each use (SOP-02.07, General Equipment Decontamination).

D. After opening the waste containers, insert the open Thief sampler into the waste to be sampled, obtain the sample, and close the sampler.

E. Remove the Thief sampler and transfer the sample from the Thief to the sample container. Refer to SOP-01.02, Sample Containers and Preservation for guidance. Reclose the waste container.

6.1 Documentation

A. Complete the Containerized Waste Sampling forms (SOP-06.15). Use the Daily Activity Log from SOP-01.04, Sample Control and Field Documentation for additional comments.

B. Complete other appropriate sample forms and labels also found in SOP-01.04.

6.2 Post Sampling Activities

A. Ensure all equipment is accounted for, decontaminated, and ready for transport.

B. Make sure all sampling locations are properly documented.

C. Package all samples for transport to the laboratory according to SOP-01.03, Handling, Packaging and Shipping of Samples.

7.0 REFERENCES

The following procedures are directly associated with this procedure and should be reviewed before field operations:

LANL-ER-SOPs in Section 1.0, General Instructions.
LANL-ER-SOPs in Section 2.0, Health and Safety in the Field.
LANL-ER-SOP-06.15, Coliwasa Sampler for Liquids and Slurries.

UNCONTROLLED

EPA. November 1986. "Test Methods for Evaluating Solid Waste", Vol. II: Field Manual Physical/Chemical Methods, Office of Solid Waste and Emergency Response, Washington D.C.

8.0 RECORDS

A. Completed Containerized Waste Sampling Form

B. Completed Chain-of-Custody and Request for Analysis Form

C. Daily Activity Log detailing any deviations and any other pertinent information

D. Sample Collection Log

9.0 ATTACHMENT

A. Thief Sampler diagram

B. Equipment and Supplies Checklist for Thief Sampler

UNCONTROLLED

THIEF SAMPLER

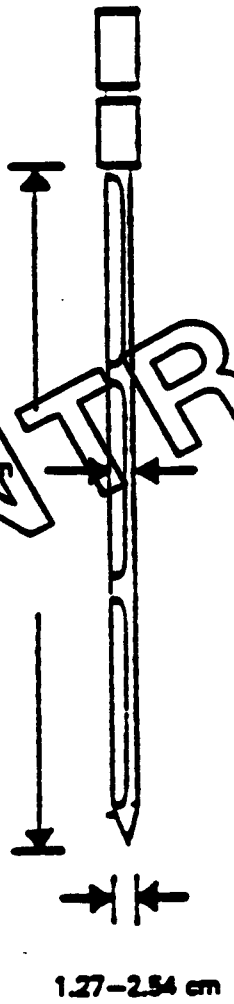

UNCONTROLLED

EQUIPMENT CHECKLIST FOR THIEF SAMPLING

_____ Thief Sampler

_____ sample container(s)

_____ decontamination equipment

_____ scrub brush

_____ pan (stainless steel or glass)

_____ disposable laboratory gloves

_____ work gloves

_____ plastic sheet

_____ blue ice or equivalent

_____ cooler

_____ Daily Activity Log

_____ Chain-of-Custody/Request for Analysis forms

_____ Sample Collection Logs

_____ Variance Logs

_____ Custody Seals

_____ Unique Sampling Stickers

_____ Sample Labels

UNCONTROLLED

Los Alamos National Laboratory **Environmental Restoration Program** Standard Operating Procedure	No: LANL-ER-SOP-06.17 Rev: 0

Trier Sampler for Sludges and Moist Powders or Granules

UNCONTROLLED

	(Print Name)	(Signature)	(Date)
Preparer:	Sandra E. Wagner	Sandra E. Wagner	10-16-91
Quality Review by:	Philip B. Fresquez	Philip B. Fresquez	10-23-91
Technical Review by:	Juan Corpion	[illegible]	11/19/91
QPPL Approval:	Karen L Warthen	Karen L Warthen	3/3/92
PM Approval:	Robert W Vocke	Robert W Vocke	3-4-92

Effective Date: 3-16-92

TRIER SAMPLER FOR SLUDGES AND MOIST POWDERS OR GRANULES

1.0 PURPOSE

This procedure describes methods for using the Trier sampler for moist powders or granules.

2.0 SCOPE

2.1 Applicability

This procedure is applicable to all site workers using the Trier sampler for sampling sludges, moist powders, and granules for the Environmental Restoration program.

2.2 Training

The site workers should be familiar with the sampling equipment and must document that they have read and understand this procedure and the procedures in Section 1.0, General Instructions.

3.0 DEFINITIONS

N/A

4.0 BACKGROUND AND/OR CAUTIONS

Trier sampler is used for sampling moist or sticky solid waste materials in bags, drums, sacks, or similar containers. A diagram of the Trier Sampler is shown in Attachment A.

A Trier consists of a long tube with a slot that extends almost its entire length. The tip and edges of the tube slot are sharpened to allow the trier to cut a core of material to be sampled when rotated after insertion into the material. A Trier sampler is most useful when the waste is moist or sticky solids with a particle diameter less than one-half the diameter of the Trier.

Site workers preparing for field operations should read and understand the procedures outlined in LANL-ER-SOPs, Section 2.0, Health and Safety in the Field. In addition, site workers should refer to site-specific Operable Unit Health and Safety plans for the particular health and safety equipment to be used.

5.0 EQUIPMENT

Equipment to implement this procedure is shown in Attachment B.

UNCONTROLLED

6.0 PROCEDURE

A. Coordinate sampling efforts with the Sample Coordination Facility.

B. Assemble the necessary equipment.

C. Decontaminate all equipment prior to and after each use per SOP-02.07, General Equipment Decontamination.

D. After opening the waste container, insert the Trier sampler into the waste and cut a core of the waste by rotating the sampler.

E. Transfer the sample from the Trier sampler to the sample container (SOP-01.02, Sample Containers and Preservation). A spoon or similar tool may be used to scrape the sample out of the Trier, if necessary.

F. For containerized materials, reclose the container.

6.1 Documentation

A. Complete the Containerized Waste Sampling Record (SOP-06.15). Any additional comments should be recorded on the Daily Activity Log, SOP-01.04, Sample Control and Field Documentation.

B. Complete other applicable sample forms and labels also found in SOP-01.04.

6.2 Post Sampling Activities

A. Ensure all equipment is accounted for, decontaminated, and ready for transport.

B. Make sure all sampling locations are properly documented.

C. Package all samples for transport to the laboratory, per SOP-01.03, Handling, Packaging, and Shipping of Samples.

7.0 REFERENCES

The following procedures are directly related to this procedure and should be reviewed before field operations:

LANL-ER-SOPs in Section 1.0, General Instructions.
LANL-ER-SOPs in Section 2.0, Health and Safety in the Field.
LANL-ER-SOP-06.15, Coliwasa Sampler for Liquids and Slurries.

UNCONTROLLED

EPA. November 1986. "Test Methods for Evaluating Solid Waste," Vol. II: Field Manual Physical/Chemical Methods, Officer of Solid Waste and Emergency Response, Washington D.C.

8.0 RECORDS

A. Completed Containerized Waste Sampling Form

B. Completed Chain-of-Custody/Request for Analysis Form

C. Completed Daily Activity Log, which will include any deviations and additional comments.

9.0 ATTACHMENT

A. Equipment and Supplies Checklist for Trier Sampler

B. Trier Sampler diagram

UNCONTROLLED

EQUIPMENT AND SUPPLIES CHECKLIST FOR TRIER SAMPLES

_____ Trier

_____ Wide-Mouth Jar

_____ Funnel

_____ Spoon

_____ Pan

_____ Containerized Waste Sampling Record

_____ Daily Activity Logs

_____ Chain-of-Custody/Request for Analysis form

_____ Sample Collection Log

_____ Variance Log

_____ Custody Seals

_____ Unique Sample Stickers

_____ Sample Labels

_____ Cooler

_____ Tape

UNCONTROLLED

TRIER SAMPLER DIAGRAM

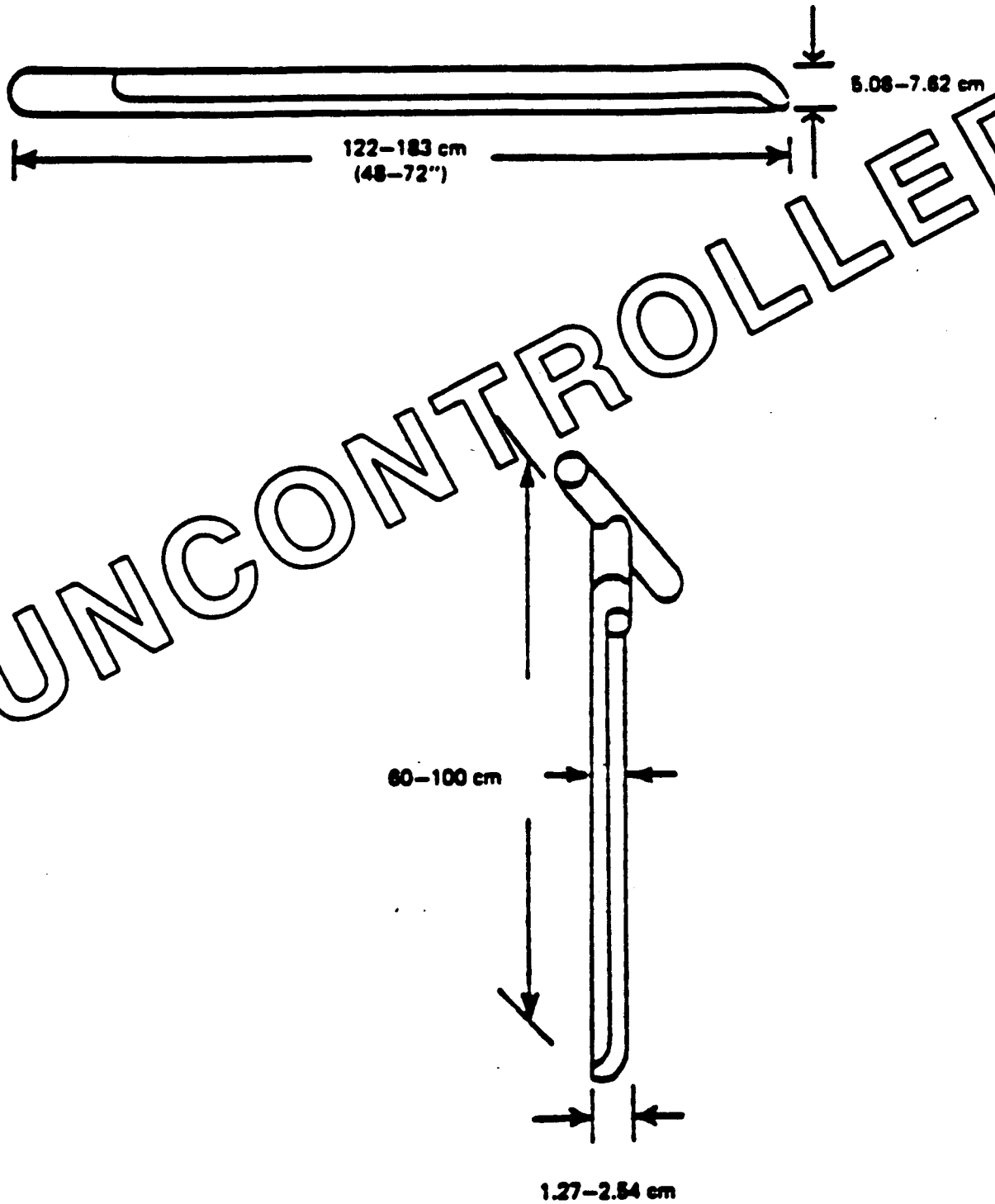

UNCONTROLLED

Los Alamos National Laboratory **Environmental Restoration Program** Standard Operating Procedure	No: LANL-ER-SOP-06.18 Rev: 0

Collection of Sand, Packed Powder, or Granule Samples Using the Hand Auger

UNCONTROLLED

	(Print Name)	(Signature)	(Date)
Preparer:	Sandra E. Wagner	Sandra E. Wagner	10-16-91
Quality Review by:	Philip R. Fresquez	Philip R. Fresquez	10-23-91
Technical Review by:	Juan Corpion	J. Corpion	11/19/91
QPPL Approval:	Karen L Warthen	Karen L. Warthen	3/3/92
PM Approval:	Robert W Vocke	Robert W Vocke	3-4-92

Effective Date: 3-16-92

COLLECTION OF SAND, PACKED POWDER, OR GRANULE SAMPLES USING THE HAND AUGER

UNCONTROLLED

1.0 PURPOSE

This procedure describes the use of the hand auger for the collection of samples in sand, packed powders, or granules.

2.0 SCOPE

2.1 Applicability

This procedure is applicable to all site workers who are involved in hand auger borings and sample collection in sand, packed powders, or granules for the Environmental Restoration program.

2.2 Training

All site workers involved with this procedure should document that they have read and understand this and the procedures in Section 1.0, General Instructions.

3.0 DEFINITIONS

N/A

4.0 BACKGROUND AND/OR CAUTIONS

Hand auger borings provide a simple method of waste investigation and sampling. They may be used for obtaining disturbed samples of sand or packed powders and granules. An illustration of a typical hand auger is shown in Attachment A.

The hand auger is particularly useful in collecting samples at depths greater than 3 inches (8 cm). This sampler destroys the structure of cohesive waste and does not distinguish between material collected near the surface or toward the bottom. Therefore, it cannot be used to collect an undisturbed soil sample. Proper back care must be exercised when pulling a stuck auger out of a hole and turning the auger for long periods of time. Work gloves may be needed to prevent blisters.

Site workers preparing for field operations should read and understand the procedures outlined in LANL-ER-SOPs, Section 2.0, Health and Safety in the Field. In addition, site workers should refer to site-specific Operable Unit Health and Safety plans for the particular health and safety equipment to be used.

5.0 EQUIPMENT

Refer to Attachment B, Equipment and Supplies Checklist, for a list of equipment used in this procedure.

6.0 PROCEDURE

A. Coordinate sampling efforts with the Sample Coordination Facility.

B. Assemble the equipment and supplies. Ensure the proper operation of all sampling equipment.

C. Decontaminate all sampling equipment before taking the first sample and between sampling intervals (SOP-02.07, General Equipment Decontamination).

D. Assemble the auger with the desired length shaft. Put Teflon™ tape on all threads to facilitate disassembly.

E. Remove any undesired surfical material from the sample location.

F. Begin augering, periodically gather the material that collects around the bore hole, then lift the auger out of the hole and remove the sample material from the auger flights. Put the sample material in the pan. Continue until the desired depth or required sample volume is reached, then put the sample into the sample containers.

G. Label sample containers and complete documentation (SOP-01.04, Sample Control and Field Documentation).

H. Decontaminate equipment (SOP-02.07). Pack samples and ship them to the laboratory per SOP-01.03, Handling, Packaging, and Shipping of Samples. Return all supplies and equipment to their proper storage location, and notify the equipment manager of any malfunction or damage.

I. Whenever a sample is collected for chemical analyses, a custody record must be initiated on the Chain-of-Custody/Request for Analysis form, and a Soil Sample Identification Label affixed to the sample container, (SOP-01.04).

J. Whenever a sample is collected, complete a description of the sample using the Borehole Log (Soil) form. An example of this form and instructions for completing this form are supplied in SOP-06.12, Soil and Rock Borehole Logging and Sampling Methods. Additional field comments should be noted in the Daily Activity Log (SOP-01.04).

K. If required, be sure a Teflon™ liner is present in the cap. Secure the cap tightly onto the sample container. Preserve the sample container with ice or in a refrigerator. Freezing

UNCONTROLLED

may be required. Consult SOP-01.03, Handling, Packaging, and Shipping of Samples, and SOP-01.02, Sample Containers and Preservation.

7.0 REFERENCES

The following procedures directly are associated with this procedure and should be reviewed before field operations:

LANL-ER-SOPs in Section 1.0, General Instructions.
LANL-ER-SOPs in Section 2.0, Health and Safety in the Field.
LANL-ER-SOP-06.12, Soil and Rock Borehole Logging and Sampling Methods.

EPA. November 1986. "Test Methods for Evaluating Solid Waste", Vol. II: Field Manual Physical/Chemical Methods, Washington, D.C. Office of Solid Waste and Emergency Response.

8.0 RECORDS

Records generated during this procedure include the following forms, completed:

A. Containerized Waste Sampling Forms or Borehole Log (Soil) Form

B. Daily Activity Log

C. Chain of Custody/Request for Analysis Form

D. Sample Collection Log

9.0 ATTACHMENTS

A. Hand Auger

B. Equipment and Supplies Checklist for Hand Augering

UNCONTROLLED

HAND AUGER

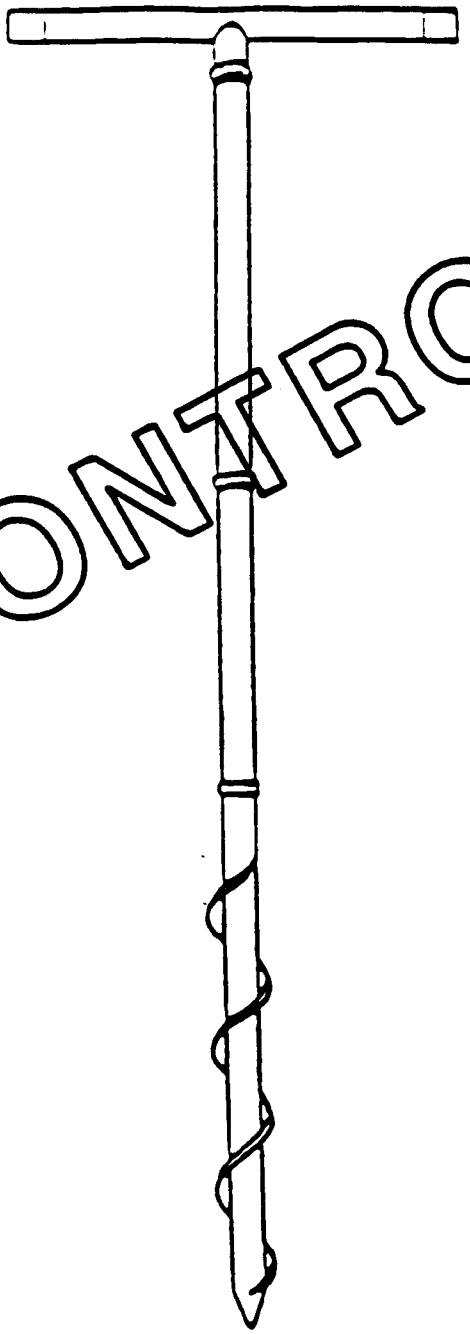

UNCONTROLLED

EQUIPMENT AND SUPPLIES CHECKLIST FOR HAND AUGERING

For soil sampling with hand augers:

_____ Drill rods

_____ T handle

_____ Auger

_____ Bucket type

_____ Continuous flight

_____ Posthole

_____ Sample container(s)

_____ Decontamination equipment

_____ Sprayer

_____ Distilled water

_____ Scrub brush

_____ Pan (stainless steel or glass)

_____ Ethanol

_____ Disposable laboratory gloves

_____ Work gloves

_____ Combustible gas indicator

_____ Portable photoionization detector (PID) or flame ionization detector (FID)

_____ Blue Ice or equivalent

_____ Cooler

UNCONTROLLED

EQUIPMENT AND SUPPLIES CHECKLIST FOR HAND AUGERING

_____ Plastic sheet

_____ Daily Activity Logs

_____ Chain-of-Custody/Request for Analysis form

_____ Sample Collection Log

_____ Variance Logs

_____ Custody Seals

_____ Unique Sample Stickers

_____ Sample Labels

UNCONTROLLED

Los Alamos National Laboratory **Environmental Restoration Program** Standard Operating Procedure	No: LANL-ER-SOP-06.19 Rev: 0

Weighted Bottle Sampler for Liquids and Slurries in Tanks

UNCONTROLLED

	(Print Name)	(Signature)	(Date)
Preparer:	Sandra E. Wagner	Sandra E. Wagner	10-16-91
Quality Review by:	Philip R. Fresquez	Philip R. Fresquez	10-23-91
Technical Review by:	Juan Corpion	[illegible]	11/19/91
QPPL Approval:	Karen L Wurthen	Karen L Wurthen	3/3/92
PM Approval:	Robert W Vocke	Robert W Vocke	3-4-92

Effective Date: 3-14-92

WEIGHTED BOTTLE SAMPLER FOR LIQUIDS AND SLURRIES IN TANKS

1.0 PURPOSE

This procedure describes the use of the weighted bottle sampler for liquids and slurries in tanks.

2.0 SCOPE

2.1 Applicability

This procedure is applicable to all personnel who collect liquid or slurry samples for the Environmental Restoration Program.

2.2 Training

All site workers involved with this procedure must document that they have read and understood this procedure and the procedures in Section 1.0, General Instructions.

UNCONTROLLED

3.0 DEFINITIONS

N/A

4.0 BACKGROUND AND/OR CAUTIONS

The weighted bottle sampler can be used to sample liquids in storage tanks, wells, sumps, and other containers. The sampler has the advantage that it remains unopened until it is at the desired sampling depth. It cannot be used to collect liquids that are incompatible with the weight and line.

The sampler consists of a glass or Teflon™ bottle, a weight, a bottle stopper, and a line that is used to lower and raise the sampler and open the bottle during sampling. There are a few variations of this sampler, as illustrated in the ASTM Methods D 270 and E 300. The ASTM sampler, which uses a metallic bottle basket and also serves as weight, is preferred. The weighted bottle sampler can either be fabricated or purchased.

The weighted bottle sampler has the following limitations:

A. The exterior of the weighted bottle sampler is exposed to hazardous materials and must be handled carefully to avoid unnecessary contamination of the immediate area.

B. The weighted bottle sampler cannot be used to collect liquids that are incompatible with the bottle, weight, or line.

C. It is difficult to use with very viscous liquids.

Site workers preparing for field operations should read and understand the procedures outlined in LANL-ER-SOPs, Section 2.0, Health and Safety in the Field. In addition, site workers should refer to site-specific Operable Unit Health and Safety plans for the particular health and safety equipment to be used.

5.0 EQUIPMENT

Weighted Bottle Sampler
Funnel
Disposable Wipes
Daily Activity Logs
Chain-of-Custody/Request-for-Analysis forms
Sample Collection Logs
Variance Logs
Custody Seals
Unique Sample Stickers
Sample Labels

6.0 PROCEDURE

A. Assemble the necessary equipment and appropriate protective clothing (SOP-02.01, Personal Protective Equipment).

B. Decontaminate all equipment before and after each use (SOP-02.07, General Equipment Decontamination).

C. Open the waste container.

D. Lower the closed weighted bottle sampler into the waste liquid to the desired depth. Record the pertinent information on the Containerized Waste Sampling Forms (SOP-06.15, Coliwasa Sampler for Liquids and Slurries). Additional field comments should be recorded on the Daily Activity Log (SOP-01.04).

E. Open the bottle stopper and collect the sample.

F. Raise the sampler out of the waste. Place the sample into a sample container (SOP-01.02, Containers, Sampling, and Preservation).

G. Repeat steps D through F until all samples have been collected.

H. Close the waste container.

UNCONTROLLED

I. Package all samples for transport to the Sample Coordination Facility (SCF), (SOP-01.03, Handling, Packaging, and Shipping of Samples). All sampling efforts must be coordinated with the SCF.

7.0 REFERENCES

The following procedures are directly associated with this procedure and should be reviewed before field operations:

LANL-ER-SOPs in Section 1.0, General Instructions.
LANL-ER-SOPs in Section 2.0, Health and Safety in the Field.
LANL-ER-SOP-06.15, Coliwasa Sampler for Liquids and Slurries.

EPA. November 1986. "Test Methods for Evaluating Solid Waste." Vol. II: Field Manual Physical/Chemical Methods, Officer of Solid Waste and Emergency Response, Washington D.C.

Ford, Patrick J., Paul J. Turina, and Douglas E. Seely. 1984. "Available Sampling Methods," Second Edition, Volume 2, "Characterization of Hazardous Waste Sites - A Methods Manual." U.S. Environmental Protection Agency document EPA/600/4-84/076. U.S. Government Printing Office, Washington, D.C.

UNCONTROLLED

8.0 RECORDS

A. Completed Containerized Waste Sampling Form

B. Completed Daily Activity Log which will include any deviations and additional comments.

9.0 ATTACHMENT

N/A

Los Alamos National Laboratory **Environmental Restoration Program** Standard Operating Procedure	No: LANL-ER-SOP-06.21 Rev: 0

Volatile Organic Sampling Train

UNCONTROLLED

	(Print Name)	(Signature)	(Date)
Preparer:	Sandra E. Wagner	Sandra E. Wagner	10-16-91
Quality Review by:	Craig F. Eberhart	Craig F. Eberhart	12/4/91
Technical Review by:	Philip R. Fresquez	Philip R. Fresquez	12/20/91
QPPL Approval:	Karen L Warthen	Karen L Warthen	3/3/92
PM Approval:	Robert W Vocke	Robert W Vocke	3-4-92

Effective Date: 3-16-92

VOLATILE ORGANIC SAMPLING TRAIN

1.0 PURPOSE

This procedure describes the collection of principal organic hazardous constituents (volatile principal organic hazardous constituents [POHCs]) with a boiling point below 100°C, from exhaust stacks or ambient air using the volatile organic sampling train (VOST), SW-846 Method 0030.

2.0 SCOPE

2.1 Applicability

This procedure is applicable to all personnel responsible for the collection of volatile POHCs from stack exhaust and ambient air samples in support of the Environmental Restoration (ER) program using the VOST.

2.2 Training

The following procedure is recommended for use by field team members who are familiar with the objectives of the sampling program, this SOP, and Method 0030. Field team members must have experience operating the VOST. Anyone other than a trained sampling technician should be closely supervised by qualified personnel when implementing this procedure. The field team leader is responsible for monitoring the implementation of this procedure. In addition, all field team members should document that they have read this procedure and the procedures in Section 1.0, General Instructions.

UNCONTROLLED

3.0 DEFINITIONS

A. Field blanks: A set of Tenax® and Tenax®/charcoal cartridges that are taken to the sampling site and the end caps removed during sample tube installation to simulate the exposure to potential ambient fugitive contamination interferences. The end caps are then replaced and these samples are sent to the laboratory with all other associated samples for analysis. This pair of traps is analyzed to monitor the potential ambient contamination conditions that might exist during cartridge change out.

B. Trip blanks: A set of Tenax® and Tenax®/charcoal cartridges that are taken to the sampling site and treated like all other sample cartridges except that the end caps are not removed during the storage at the site. These samples are intended to demonstrate that no contamination of samples has occurred during storage and shipment of samples.

C. Laboratory blanks: A set of Tenax® and Tenax®/charcoal cartridges are analyzed in the laboratory after being prepared. These traps are analyzed to identify any sources of contamination present during the preparation of the sample cartridges at the laboratory.

The traps are also analyzed to assist in evaluating the field and trip blanks if high levels of contamination are indicated. These samples may also be used to evaluate the recoveries of the analytes of interest. This is done by spiking these target compounds onto the lab blank tubes at the levels expected to be on the associated field samples.

D. Principal organic hazardous constituents (POHCs): Chemical species, usually two to six hard-to-combust organic compounds, selected to demonstrate the destruction and removal efficiency of hazardous waste incinerators. These POHCs are comparable to the target compound list, which is used for ambient air sampling and identifies the organic compounds that are of interest during the investigation.

E. Condensate trap: The vessel where the water that condensates out of the gas sample is collected. The condensation occurs when the gas passes through the first condenser. This condensate sample is collected following each sampling run and submitted to the laboratory for analysis.

F. Sorbent cartridges or sorbent residue traps: The cartridges that contain Tenax® and petroleum-based charcoal (in which volatile POHCs are collected). The traps are analyzed to determine the volatile POHC concentration in the gas sampled.

4.0 BACKGROUND AND/OR CAUTIONS

This procedure is applicable to the determination of volatile POHCs in both stack exhaust and ambient air. This method was first designed for determining incinerator destruction and removal efficiency (DRE) and to verify that the volatile POHCs removal efficiency is equal to or greater than 99.99%. This method was later slightly modified and adapted to include the sampling of ambient air sources.

Analysis of the sorbent traps is carried out by thermal desorption purge-and-trap by gas chromatography/mass spectometry. The sorbent traps may be analyzed separately or combined into one trap to improve the detection limit when levels of detectable volatile POHCs are low.

Special attention should be given during the installation of the VOST cartridges into the sampling train. The sorbent traps should be handled carefully to minimize the exposure to ambient contamination that might be present. The sorbent traps must be properly oriented in the train so the gas stream flows into the trap through a designated inlet. The inlet end of the trap is generally indicated by the laboratory prior to being sent to the field. This inlet identification may be in the form of an etched sample number or frosted diamond at one end of the trap. If the trap inlet is not identified, the sample technician is responsible for selecting the inlet end (flow direction) and clearly identifying it so the laboratory personnel will purge the trap properly during analysis. The inlet end of the used sorbent trap should be identified and marked by the sampling technician regardless of other markings.

UNCONTROLLED

The VOST procedures require that a known volume of effluent gas (maximum 20 liters) containing volatile POHCs be collected from a gaseous effluent source. The conditions under which the VOST is operating during this collection is of great importance. Three types of operating conditions (FAST-VOST, SLO-VOST, and ULTRA SLO-VOST) for sample collection are currently accepted and are presented in the referenced methods. When the FAST-VOST conditions are used, a gas sample is drawn into a sample probe from the gaseous effluent source, passed through a water-cooled condenser, and then is pulled through the cartridges at a flow rate of 1 liter/minute for 20 minutes. Using SLO-VOST conditions, a sample is drawn through the same VOST apparatus previously mentioned at a reduced flow rate of 0.5 liter/minute for 40 minutes. Using the ULTRA SLO-VOST, the sample flow rate is reduced even further to 0.25 liter/minute. In all three cases, the VOST is operated at the desired flow rate until a desired sample volume can be collected and passed through the sorbent cartridges. There are several advantages to using SLO-VOST and ULTRA SLO-VOST sampling conditions during sample collection. The sample gas stream containing the POHCs has a longer retention time in the first sorbent cartridge reducing the chances of breakthrough to the second sorbent cartridge. This is especially true for volatile POHCs that are highly volatile (boiling points below 35°C) and difficult to trap in the sorbent cartridges. For this reason the SLO-VAST and ULTRA SLO-VAST sampling procedures are highly recommended even though the sampling time required to collect a specific volume is increased.

To achieve analytical results that will indicate POHC breakthrough, the Tenax® sorbent trap and the Tenax®/charcoal sorbent trap should be desorbed and analyzed separately. The samples are considered valid (no breakthrough) if the back trap (Tenax®/charcoal trap) contains no more than 30% of the quantity collected on the front Tenax® trap. This characteristic does not apply when the quantity of sample is less that 75 µg on the back trap. Unlike the traps used for the actual samples, it is recommended that both the cartridges that compose each QC sample set (field and trip blanks) be desorbed and analyzed together.

The sensitivity of this method depends on the level of interferences in the sample and the presence of detectable levels of volatile POHCs in the QC blanks. The upper end of the range of applicability of this method is limited by the breakthrough of the volatile POHCs on the sorbent traps that are used to collect the sample. Laboratory development data have demonstrated a range of 1.0 to 100 µg/m^3 for selected volatile POHCs collected on a pair of traps using a total sample volume of 20 liters or less. The most commonly encountered interferences are structural isomers. Contamination of the Tenax® cartridges with compounds that are of interest is another common problem that is encountered when applying this method. This problem can be prevented by being extremely careful in the preparation, storage, and handling of the cartridges throughout the entire sampling analytical process.

When storing and shipping the sorbent cartridges, the use of dry ice for the purpose of storing VOST tubes is widely accepted as "good sampling and analyses practice." Not only does the colder temperature reduce the mobility of highly volatile analytes with boiling point at or below zero (such as vinyl chloride or chloromethane), but the continuous sublimation of the solid CO_2 fills the storage cooler and prevents the encroachment of fugitive contaminants into the resin tubes. No bias is introduced through the implementation of this procedure. Any bias would

UNCONTROLLED

manifest itself during the method performance audit because resin tube storage and handling is identical to that used for the sample. A successful audit validates the procedures and the overall handling effectiveness of the protocols used.

5.0 EQUIPMENT

The equipment required for the collection of stack exhaust or ambient air sampled using the VOST method is shown in Attachments A and B.

6.0 PROCEDURE

A detailed description of the VOST sampling and analytical methods as it applies to incinerator stack gases is provided in Method 0030 of "Test Methods for Evaluating Solid Waste, Volume 2 Laboratory Manual Physical/Chemical Methods" by the U.S. Environmental Protection Agency, Office of Solid Waste and Emergency Response (SW 846). The following is a summary of that method. A modified compendium method TO-2 may be used for ambient gas sampling.

A. Sorbent Trap Preparation. The assembly and packing of the sorbent cartridges should be carried out in an area free of volatile organic material, preferably a laboratory where no organic solvents are handled or stored and one that is charcoal filtered. Alternatively, the assembly procedures may be conducted in a glove box that has been purged with organic-free nitrogen.

The dry gas meter should have been callibrated within 30 days of its use. The sorbent resin trap should contain Tenax® and the back up sorbent resin trap should contain Tenax® and petroleum-based charcoal. Because less equipment is attached to the sampling train in ambient gas sampling, a less powerful pump may be used. Personnel monitoring pumps have been used.

If sampling stack gas, assemble the VOST according to the schematic diagram in Attachment A. For ambient air sampling, replace the heated probe with an inverted funnel and omit the two condensers and the condensate trap impinger. Care must be exercised to ensure that the gas flows through the sorbent cartridges in the proper direction.

For ambient air sampling, replace the heated probe and condenser by an inverted funnel and omit the two condensers and the condensate trap impingers. As mentioned before, care must be exercised to ensure that the sampled gas stream flow through the sorbent cartridges is properly indicated on the sample tubes.

B. VOST Assembly. A schematic diagram of the principal components of the VOST for sampling stack gas is shown in Attachment A, and a diagram of one version of the VOST is shown in Attachment B. The VOST consists of a glass-lined probe followed by an isolation valve, a water-cooled glass condensor, a sorbent cartridge containing Tenax® (1.6 g), an empty impinger for condensate removal, a second water-cooled glass condenser, a second sorbent cartridge containing Tenax® and petroleum-based charcoal (3 to 1 by volume;

UNCONTROLLED

approximately 1 g of each), a silica gel drying tube, a callibrated rotameter, a sampling pump, and a dry gas meter. The gas pressure during sampling and for leak-checking is monitored by pressure gauges that are in line and downstream of the silica gel drying tube.

C. Leak Checking Procedure. The train is leak-checked by closing the valve at the inlet to the first condenser and pulling a vacuum of 250 mm (10 inches Hg) above the normal operating pressure. The traps and condensers are isolated from the pump, and the leak rate is noted. The leak rate should be less than 2.5 mm Hg after 1 minute.

After a successful leak check, the train is then returned to atmospheric pressure by attaching a charcoal-filled tube to the train inlet and admitting ambient air filtered through the charcoal. This procedure will minimize contamination of the VOST components by excessive exposure to the fugitive emissions at hazardous waste incinerator sites.

D. Sample Collection Procedure. After leak-checking, sample collection is accomplished by opening the valve at the inlet to the first condensor, turning on the pump, and sampling at one of the three sampling rate conditions (FAST-VOST, SLO-VOST, or ULTRA SLO-VOST).

Following collection of a 20-liter sample, the train is leak-checked a second time at the highest pressure drop encountered during the run to minimize the chance of vacuum desorption of organics from the Tenax®. The train is returned to atmospheric pressure using a charcoal tube and the two sorbent cartridges are removed. The end caps are replaced and the cartridges placed in a suitable environment for storage and transport until analysis. The sample is considered invalid if the leak test does not meet specification.

Following the completion of a set of VOST traps, a new pair of cartridges is placed in the VOST, the VOST leak-checked, and the sample collection process repeated as described above. Sample collection continues until four pairs of traps (three sample pairs and one back-up pair) have been used.

All sample cartridges should be kept on cold packs until they are ready for analysis.

E. QC Samples. Take blank Tenax® and Tenax®/charcoal cartridges to the sampling site and remove the end caps to exchange two pairs of traps on the VOST. This task typically takes 10 minutes. The end caps are replaced on the blank Tenax® and Tenax®/charcoal tubes and then returned to the cold packs and analyzed with the sample traps. At least one pair of field blanks (one Tenax®, one Tenax®/charcoal) should be included with each of the four pairs of sample cartridges collected (or for each field trial using VOST to collect volatile POHCs).

Also include at least one pair of blank cartridges (one Tenax®, one Tenax®/charcoal) with shipment of sorbent cartridges to the site. Treat these trip blanks like any other cartridges except do not remove the end caps during storage at the site. These samples remain in the

UNCONTROLLED

same cold storage cooler with all other associated samples. Analyze this pair of traps to monitor potential contamination that may occur during storage and shipment.

One pair of blank cartridges (one Tenax®, one Tenax®/charcoal) remains in the laboratory using the same method of storage that is used for field samples. If the field and trip blanks contain high concentrations of contaminants (e.g., greater than 2 ng of a particular POHC), the laboratory blank should be analyzed to identify the source of contamination.

F. Method Performance Audit. Prior to field operation of the VOST at a hazardous waste incinerator, a method performance check should be conducted using either selected volatile POHCs of interest or two or more of the volatile POHCs for which data are available.

This check may be conducted on the entire system (VOST/GC/MS) by analysis of a gas cylinder containing POHCs of interest or on only the analytical system by spiking of the POHCs onto the traps. The results of this check for replicate pairs of traps should demonstrate that recovery of the analytes falls within 50% to 150% of the expected values.

UNCONTROLLED

6.1 Documentation

Using the Daily Activity Log from SOP-01.01.01, Records, record:

- The results of all leak checks conducted before and after the sampling including the beginning and ending vacuum readings and times on appropriate data sheets.
- For each sample, gas flow rate, beginning and ending times, volume measured by the flowmeter, flowmeter temperature and barometric pressure on appropriate data sheets.
- Any additional comments or notes.

6.2 Postoperation Activities

A. If decontamination of sample containers or equipment is necessary, dispose of cleaning/decontamination materials properly (SOP-02.07, General Equipment Decontamination, and SOP-01.06, Management of RFI-Generated Waste).

B. Properly store samples until they can be shipped to the laboratory (SOP-01.03).

7.0 REFERENCES

The following procedures are directly associated with this procedure and should be reviewed before sampling:

LANL-ER-SOPs in Section 1.0, General Instructions.
LANL-ER-SOP-02.07, General Equipment Decontamination.

EPA. September 1986. Test Methods for Evaluating Solid Waste, Volume 2: "Laboratory Manual Physical/Chemical Methods." Method 0030. SW 846. Washington, D.C.

EPA. May 1988. Compendium Method TO-2.

8.0 RECORDS

A. Completed Chain-of-Custody/Request for Analysis Form

B. Record all other pertinent information on the Daily Activity Log found in SOP-01.01.01

9.0 ATTACHMENTS

A. Schematic of Volatile Organic Sampling Train (VOST)

B. Volatile Organic Sampling Train (VOST)

UNCONTROLLED

SCHEMATIC OF VOLATILE ORGANIC SAMPLING TRAIN (VOST)

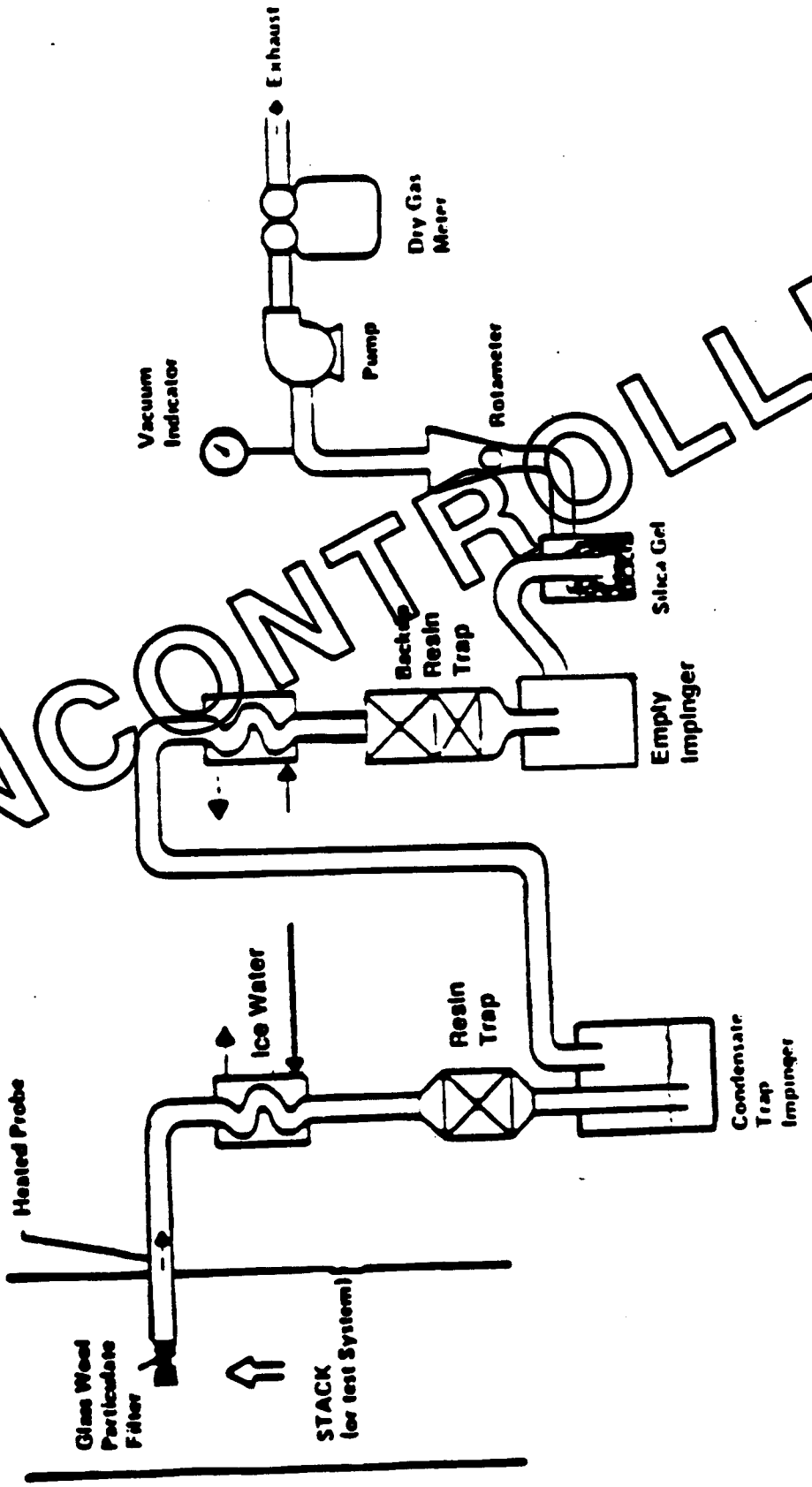

UNCONTROLLED

VOLATILE ORGANIC SAMPLING TRAIN (VOST)

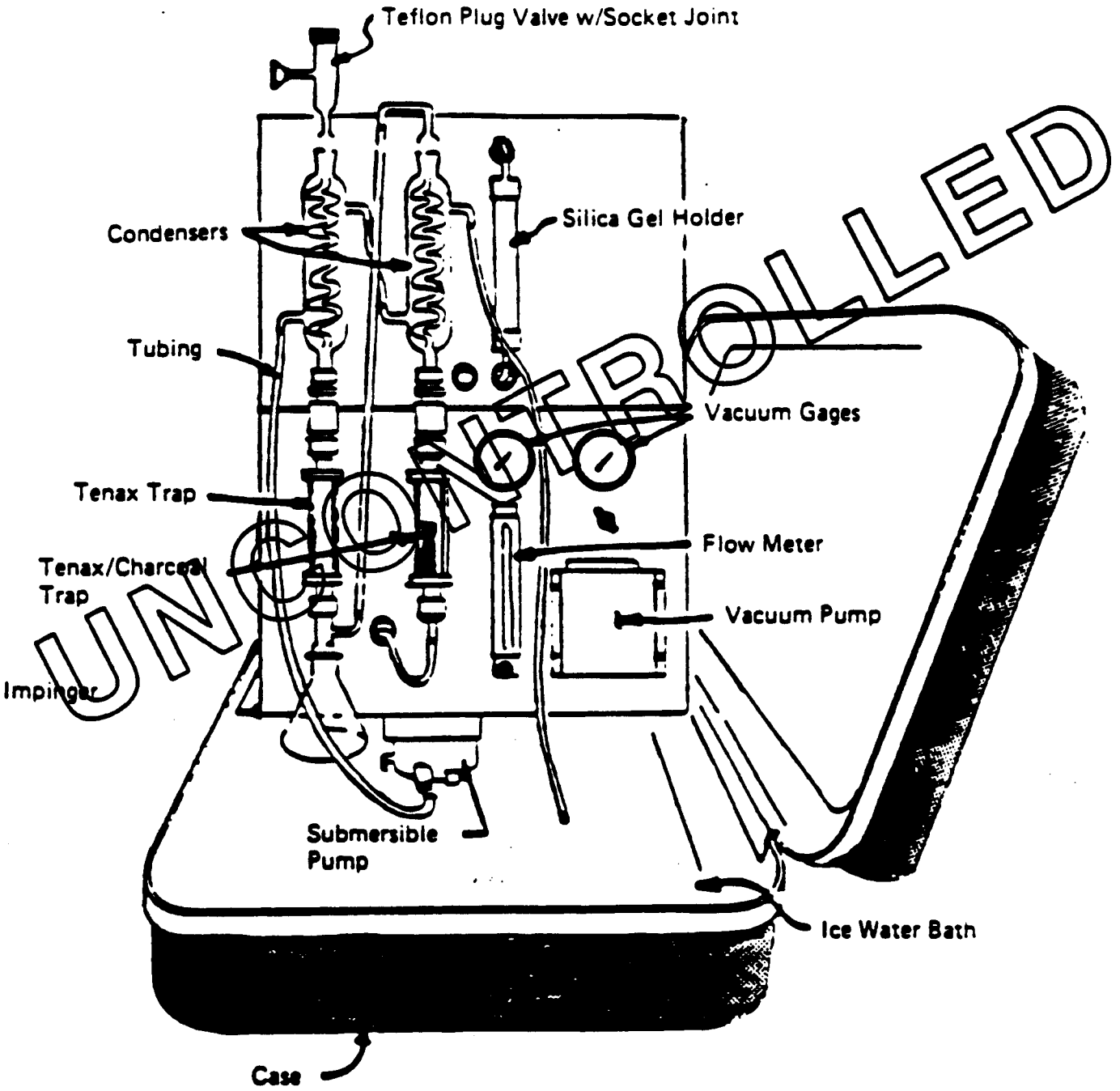

UNCONTROLLED

Los Alamos National Laboratory **Environmental Restoration Program** Standard Operating Procedure	No: LANL-ER-SOP-06.22 Rev: 0

Canister Sampling for Organics - EPA Method T0-14

UNCONTROLLED

Preparer:	Sandra E. Wagner (Print Name)	Sandra E. Wagner (Signature)	10-16-91 (Date)
Quality Review by:	Craig F. Eberhart (Print Name)	Craig F. Eberhart (Signature)	12/4/91 (Date)
Technical Review by:	Juan C. Corpion (Print Name)	J Corpion (Signature)	12/18/91 (Date)
QPPL Approval:	Karen L Warthen (Print Name)	Karen L Warthen (Signature)	3/3/92 (Date)
PM Approval:	Robert W Vocke (Print Name)	Robert W Vocke (Signature)	3-4-92 (Date)

Effective Date: 3-16-92

TABLE OF CONTENTS

1.0 PURPOSE . . . 2
2.0 SCOPE . . . 2
2.1 Applicability . . . 2
2.2 Training . . . 2
3.0 DEFINITIONS . . . 2
4.0 BACKGROUND AND/OR CAUTIONS . . . 3
4.1 Background Information . . . 3
4.2 Precautions and Safety Issues . . . 4
5.0 EQUIPMENT . . . 5
6.0 PROCEDURE . . . 5
6.1 Quality Assurance/Quality Control Procedures, Frequencies, and Acceptance Criteria . . . 7
6.2 Documentation . . . 8
6.3 Postoperation Activities . . . 9
7.0 REFERENCES . . . 9
8.0 RECORDS . . . 9
9.0 ATTACHMENTS . . . 9
A. Canister Cleaning System . . . 11
B. Sampler Configuration for Subatmospheric Pressure or Pressurized Canister Sampling . . . 12
C. Alternative Sampler Configuration for Pressurized Canister Sampling . . . 13
D. Schematic of Calibration System . . . 14
E. Canister Analysis Utilizing GC-MS-SCAN-SIM Analytical System . . . 15
F. Canister Cleaning and Certification Procedures . . . 16
G. Sampling System Cleaning and Certification Procedures . . . 17
H. Canister Sampling Field Data Sheet . . . 19
I. Data Form Completion . . . 20
J. Example of Humid Zero Air Test Results . . . 21

UNCONTROLLED

CANISTER SAMPLING FOR ORGANICS-EPA METHOD T0-14

1.0 PURPOSE

This procedure describes the sampling for volatile organic compounds (VOCs) in ambient air using SUMMA® passivated canisters for the Environmental Restoration (ER) program.

2.0 SCOPE

2.1 Applicability

This method is applicable for sampling specific VOCs that have been tested and are stable when stored in pressurized or subatmospheric pressure canisters.

2.2 Training

The field team members should be familiar with the objectives of canister sampling for VOCs and must document that they have read and understand this and the procedures in Section 1.0, General Instructions.

UNCONTROLLED

3.0 DEFINITIONS

A. Absolute canister pressure: Pg+Pa, where Pg = gauge pressure in the canister (kPa, psi) and Pa = barometric pressure (kPa, psi).

B. Absolute pressure: Pressure measured with reference to absolute zero pressure (as opposed to atmospheric pressure), usually expressed as kPa, mm Hg or psia.

C. Cryogen: A refrigerant used to obtain very low temperatures in the cryogenic trap of the analytical system. A typical cryogen is liquid oxygen (bp -183.0°C) or liquid argon (bp -185.7°C).

D. Dynamic calibration: Calibration of an analytical system using calibration gas standard concentrations in a form identical or very similar to the samples to be analyzed and by introducing such standards into the inlet of the sampling or analytical system in a manner very similar to the normal sampling or analytical process.

E. Gauge pressure: Pressure measured greater than ambient atmospheric pressure (as opposed to absolute pressure). Zero gauge pressure is equal to ambient atmospheric (barometric) pressure. Gauge pressure is usually expressed as kPa, mm Hg, or psig.

F. MS-SCAN: The gas chromatograph (GC) is coupled to a mass spectrometer (MS) programmed in the SCAN mode to repeatedly scan all ions during the GC run. As used in

the current context, this procedure serves as a qualitative identification and characterization of the sample.

G. MS-SIM: The GC is coupled to a MS programmed to acquire data for only specified ions and to disregard all others. This is performed using selecting ion monitoring (SIM) mode coupled to retention time discriminators. The GC-SIM analysis provides quantitative results for selected constituents of the sample gas as programmed by the user.

H. Pressurized sampling: Collection of an air sample in a canister using a sample pump with a (final) canister pressure greater than atmospheric pressure.

I. Qualitative accuracy: The ability of an analytical system to correctly identify compounds.

J. Quantitative accuracy: The ability of an analytical system to correctly measure the concentration of an identified compound.

UNCONTROLLED

4.0 BACKGROUND AND/OR CAUTIONS

4.1 Background Information

Both subatmospheric pressure and pressurized sampling modes use an initially evacuated canister and a pump-ventilated sample line during sample collection. Pressurized sampling requires an additional pump to provide positive pressure to the sample canister. A sample of ambient air is drawn through a sampling train. The sampling train comprises components that regulate the rate and duration of sampling into a pre-evacuated SUMMA® passivated canister. After the air sample is collected, the canister valve is closed, an identification tag is attached to the canister, and the canister is transported to a laboratory for analysis.

This method is generally used for the collection of non-polar, insoluble (or slightly soluble) compounds. The method is severely limited in determining highly soluble compounds (i.e. alcohols, ketones, acetonitriles) due to the sample analysis procedure. For these highly water soluble compounds, Tenax™ resin media tubes and a "Volatile Organic Sampling Train," details this procedure.

Collection of ambient air samples in canisters provides (1) convenient integration of ambient samples over a specific time period, (e.g., 24 hours); (2) remote sampling and central analysis; (3) ease of storing and shipping samples; (4) unattended sample collection; (5) analysis of samples from multiple sites with one analytical system; and (6) collection of sufficient sample volume to allow assessment of measurement precision and/or analysis of samples by several analytical systems. Care, however, must be exercised in selecting, cleaning, and handling sample canisters and sampling apparatus to avoid losses or contamination of the samples. Contamination is a critical issue with canister-based sampling because the canister is the last element in the sampling train. Interior surfaces of the canisters are treated by the SUMMA® passivation process, in which a pure chrome-

nickel oxide is formed on the surface. This type of vessel has been used in the past for sample collection and has demonstrated sample storage stability of many specific organic compounds. All other sampling equipment (e.g., pump and flow controllers) should be thoroughly cleaned to ensure that the filling apparatus will not contaminate samples.

In preparation for subatmospheric sample collection in a canister, the canister is evacuated to 0.05 mm Hg. When opened to the atmosphere containing the VOCs to be sampled, the differential pressure causes the sample to flow into the canister. This technique may be used to collect grab samples (duration of 10 to 30 seconds) or time-integrated samples (duration of 12 to 24 hours) taken through a flow-restrictive inlet (e.g., mass flow controller, critical orifice). With a critical orifice flow restrictor, there will be a decrease in the flow rate as the pressure approaches atmospheric. With a mass flow controller, however, the subatmospheric sampling system can maintain a constant flow rate from full vacuum to within about 7 kPa (1.0 psi) or less below ambient pressure.

Pressurized sampling is used when longer-term integrated samples or higher volume samples are required. A metal bellows-type pump draws in ambient air from the sampling manifold to fill and pressurize the sample canister. The sample is collected in a canister using a pump and flow control arrangement to achieve a typical 103-206 kPa (15 to 30 psig) final canister pressure. For example, a 6-liter evacuated canister can be filled at 10 cm^3/min for 24 hours to achieve a final pressure of about 144 kPa (21 psig).

UNCONTROLLED

4.2 Precautions and Safety Issues

While working at the site, and especially during sampling operations, personnel safety procedures will be observed to prevent exposure to chemical and physical hazards. These procedures will encompass standard safety practices as well as those established by the site safety officer and those found in the Site Health and Safety Plan.

This SOP requires the use of the following equipment: compressed gas cylinders and canisters, cryogenic fluids (with temperatures typically less than -180° C), chemical reagents and gases, and a field GC or GC/MS unit. All of the previously mentioned equipment must be handled and used in a manner that ensures safety. Carefully read all manufacturer's warning labels associated with equipment. Contact the site safety officer to review Material Safety Data Sheets (MSDSs) for any reagents and gases before implementing this procedure, and review the Site Health and Safety Plan. If any reagents are purchased for the execution of this SOP, make sure that the site safety officer receives copies of the MSDS. At a minimum, safety glasses, safety shoes and hard hats will be required in designated areas of hazardous activities. Insulated gloves and containment equipment will be used when handling cryogenic fluids. Other personal protective equipment may be required as specified by the site safety officer.

5.0 EQUIPMENT

Equipment required to implement this procedure is specified in detail in the EPA Compendium Method TO-14, May 1988. Attachments A, B, C, D, and E diagram the sampling and analytical systems required.

6.0 PROCEDURE

A detailed description of the canister sampling method is provided in "The Determination of Volatile Organic Compounds (VOCs) in Ambient Air Using SUMMA® Passivated Canister Sampling and Gas Chromatograph Analysis" by the Environmental Protection Agency Compendium Method T0-14, May 1988.

The following is a summary of that compendium:

A. The sample canister should be cleaned and tested according to the procedure in Attachment F.

B. A sample collection system is assembled as shown in Attachment B and C and must meet certification requirements as outlined in Attachment G. (Note: The sampling system should be contained in an appropriate enclosure.)

C. Prior to locating the sampling system, the user may want to perform "screening analyses" using a portable GC system, to determine potential volatile organics present and potential "hot spots." The information gathered from the portable GC screening analysis is used in developing a monitoring protocol, which includes the sampling system location, based upon the "screening analysis" results.

D. After "screening analysis," the sampling system is located. Temperatures of ambient air and sampler box interior are recorded on a Canister Sampling Field Data Sheet, see Attachment H. For general instructions on filling out forms, refer to SOP-01.01.01, Records.

E. To verify correct sample flow, a "practice" (evacuated) canister is used in the sampling system. (Note: For a subatmospheric sampler, the flowmeter and practice canister are needed. For the pump-driven system, the practice canister is not needed, as the flow can be measured at the outlet of the system). A certified mass flowmeter is attached to the inlet line of the manifold, immediately in front of the filter. The canister is opened. The sampler is turned on and the reading of the certified mass flowmeter is compared to the sampler mass flow controller. The values should agree within ±10%. If not, the sampler mass flowmeter needs to be recalibrated or there is a leak in the system. This should be investigated and corrected. (Note: Mass flowmeter readings may drift. Check the zero reading carefully. To compensate for any zero drift, add or subtract the zero reading when reading or adjusting the sampler flow rate). After 2 minutes, the desired canister flow rate is adjusted to the proper value (as indicated by the certified mass flowmeter) by the sampler

UNCONTROLLED

flow control unit controller (e.g., 3.5 cm^3/min for 24 hr, 7.0 cm^3/min for 12 hr). Record final flow on Canister Sampling Field Data Sheet, Attachment H.

F. The sampler is turned off and the elapsed time meter is reset to 000.0. (Note: Any time the sampler is turned off, wait at least 30 seconds to turn the sampler back on.) The "practice" canister and certified mass flowmeter are disconnected and a clean certified (refer to Attachment F) canister is attached to the system.

G. The canister valve and vacuum/pressure gauge valve are opened. Pressure/vacuum in the canister is recorded on the canister sampling field data sheet (Attachment H) as indicated by the sampler vacuum/pressure gauge.

H. The vacuum/pressure gauge valve is closed and the maximum/minimum thermometer is reset to current temperature. Time of day and elapsed time meter readings are recorded on the canister sampling field data sheet (Attachment H).

I. Sampling commences and stops by the programmed electronic timer.

J. After the desired sampling period, the maximum/minimum, current interior temperature and current ambient temperature are recorded on the sampling field data sheet. The current reading from the flow controller is recorded. At the end of the sampling period, the vacuum/pressure gauge valve on the sampler is briefly opened and closed and the pressure/vacuum is recorded on the canister sampling field data sheet. Pressure should be close to desired pressure. (Note: For a subatmospheric sampling system, if the canister is at atmospheric pressure when the field final pressure check is performed, the sampling period may be suspect. This information should be noted on the canister sampling field data sheet). Time of day and elapsed time meter readings are also recorded.

K. The canister valve is closed. The sampling line is disconnected from the canister and the canister is removed from the system. For a subatmospheric system, a certified mass flowmeter is again connected to the inlet manifold in front of the in-line filter and a "practice" canister is attached to the Magnelatch valve of the sampling system. The final flow rate is recorded on the canister sampling field data sheet. (Note: For a pressurized system, the final flow may be measured directly.) The sampler is turned off. An identification tag is attached to the canister. Canister serial number, sample number, location, and date are recorded on the tag.

L. When the sample canister is used to sample <u>high</u> concentration ($\geq$ 1,000 ppm) gas streams, special precautions are required for sample handling at the analytical laboratory and in the field. First, a warning statement to the laboratory is included on the Chain-of-Custody/Request for Analysis forms and sample data sheets sent along with the sample canister. Secondly, a special warning label must be attached to the canister, in addition to the sample ID tag, prior to shipment. These two steps are performed so that the analyst can adjust the GC unit's sensitivity before analysis to avoid instrument contamination. Also, the laboratory personnel responsible for the cleaning of the canisters will know to use a

UNCONTROLLED

methanol rinse cleaning procedure to remove any residual, high-contaminant gas condensate in the canisters.

In addition to these laboratory preparation steps, high-concentration canister sampling requires a more thorough decontamination of all used sampling equipment. The usual decontamination procedures (Attachment G) should be repeated for all affected sampling equipment. Decontamination procedures should always be followed by a field sampling system blank check (Section 6.1).

M. Decontaminate specified sampling equipment using the protocol found in Attachment F. For other equipment used, follow SOP-02.07, General Equipment Decontamination.

6.1 Quality Assurance/Quality Control Procedures, Frequencies, and Acceptance Criteria

To ensure that the samples collected are representative of the true sample matrix the following field QA/QC procedures will be performed:

QA/QC PROCEDURE	METHOD TO-14 SECTION	FREQUENCY	ACCEPTANCE CRITERIA
Flowmeter Verification	9.2.5	Before and after each sample collection	± 10% of certified
Canister Cleaning and Certification	11.1	Before canister is prepared for collecting a sample	Less than <0.2 ppbv of target VOCs found; verify first 10 canisters, if all are < 0.2 ppbv,then verify 1/10
Canister Leak/ Pressure Check	11.1.2	After each canister cleaning	Pressurize to 30 psig for 24 hours, < 2 psig maximum change
Field Sampling System Cleaning and Certification	11.2	Before the sampling system system is used for collecting a sample	Less than < 0.2 ppbv of target VOCs found
Field Sampling System Certification using Calibration Gas Standards	11.2.3	Before the sampling system is used for collecting a sample	90-110% Recovery
Sampling System Audit	12.2	Once for each field sampling system used; sample each cylinder in triplicate	90-110% Recovery ±25% RSD

Use the referenced sections of Method TO-14 to find the specific methodology. In addition, Attachment F of this SOP summarizes the canister cleaning procedure and Attachment G addresses the field sampling system cleaning and certification procedures.

UNCONTROLLED

The analytical QA/QC procedures will be in accordance with Method TO-14. These procedures depend on the type of analytical system employed (i.e., GC/MS or GC/Multidetector). Method TO-14 Section 12.5.2 specifies the QA/QC procedures and acceptance criteria for the GC/MS system. Section 12.5.3 specifies the GC/Multi-detector system QA/QC procedures and acceptance criteria. In addition to Method TO-14 procedures, the following analytical protocols will be employed:

1. Accuracy determinations

   Surrogate spikes: Known concentrations of surrogate compounds (in a gas) will be added to the sample gas stream as the stream is purged from the canister, but before the stream enters the analytical system. The recovery of these compounds is used as a determination of analytical accuracy.

   Blank canister spikes: A blank sample canister will be directly spiked with a known concentration of the analytes of interest in nitrogen gas. The spike will be allowed to equilibrate in the canister and then analyzed using the same methodologies used in analyzing actual canister samples. The recovery of the spiked compounds indicates the accuracy of the canister sample method and of the analytical system.

2. Precision determination

   Replicate analysis: Multiple aliquots of sample gas will be purged from the sample canister and analyzed individually. Analytical precision is determined by relative percent difference.

UNCONTROLLED

6.2 Documentation

A. Complete all data collection forms and calibration forms. Use the Daily Activity Log in SOP-01.01.01 to record general comments and other information not included elsewhere.

B. Complete sample control forms (SOP-01.04).

C. Fill out all required shipping forms for the samples per in SOP-01.03, Handling, Packaging, and Shipping of Samples, and ship the samples to the preapproved analytical laboratory.

6.3 Postoperation Activities

A. Contact the analytical lab to ensure that samples arrived safely and instructions for sample analysis are clearly understood.

B. Disassemble and clean all equipment and prepare them for storage.

7.0 REFERENCES

The following procedures are directly associated with this procedure and should be reviewed before canister sampling:

LANL-ER-SOPs in Section 1.0, General Instructions.
LANL-ER-SOP-02.07, General Equipment Decontamination.
LANL-ER-SOP-06.21, Volatile Organic Sampling Train.

EPA. May 1988. Compendium Method T0-14 "The Determination of Volatile Organic Compounds (VOCs) in Ambient Air Using SUMMA® Passivated Canister Sampling and Gas Chromatographic Analysis."

UNCONTROLLED

8.0 RECORDS

A. Completed Canister Sampling Field Data Sheet

B. Completed Chain-of-Custody/Request for Analysis Form

C. Completed Calibration records

D. Completed Daily Activity Log including any deviations and other pertinent information

9.0 ATTACHMENTS

A. Canister Cleaning System

B. Sampler Configuration for Subatmospheric Pressure or Pressurized Canister Sampling

C. Alternative Sampler Configuration for Pressurized Canister Sampling

D. Schematic of Calibration System and Manifold for: (a) Analytical System Calibration, (b) Testing Canister Sampling System, and (c) Preparing Canister Transfer Standards

E. Canister Analysis Utilizing GC-MS-SCAN-SIM Analytical System with Optional Flame Ionization Detector with the 6-Port Chromatographic Valve in the Sample Desorption Mode

F. Canister Cleaning and Certification Procedures

G. Sampling System Cleaning and Certification Procedures

H. Canister Sampling Field Data Sheet

I. Data Form Completion

J. Example of Humid Zero Air Test Results for (a) a Clean Sampler and (b) a Contaminated Sampler

UNCONTROLLED

CANISTER CLEANING SYSTEM

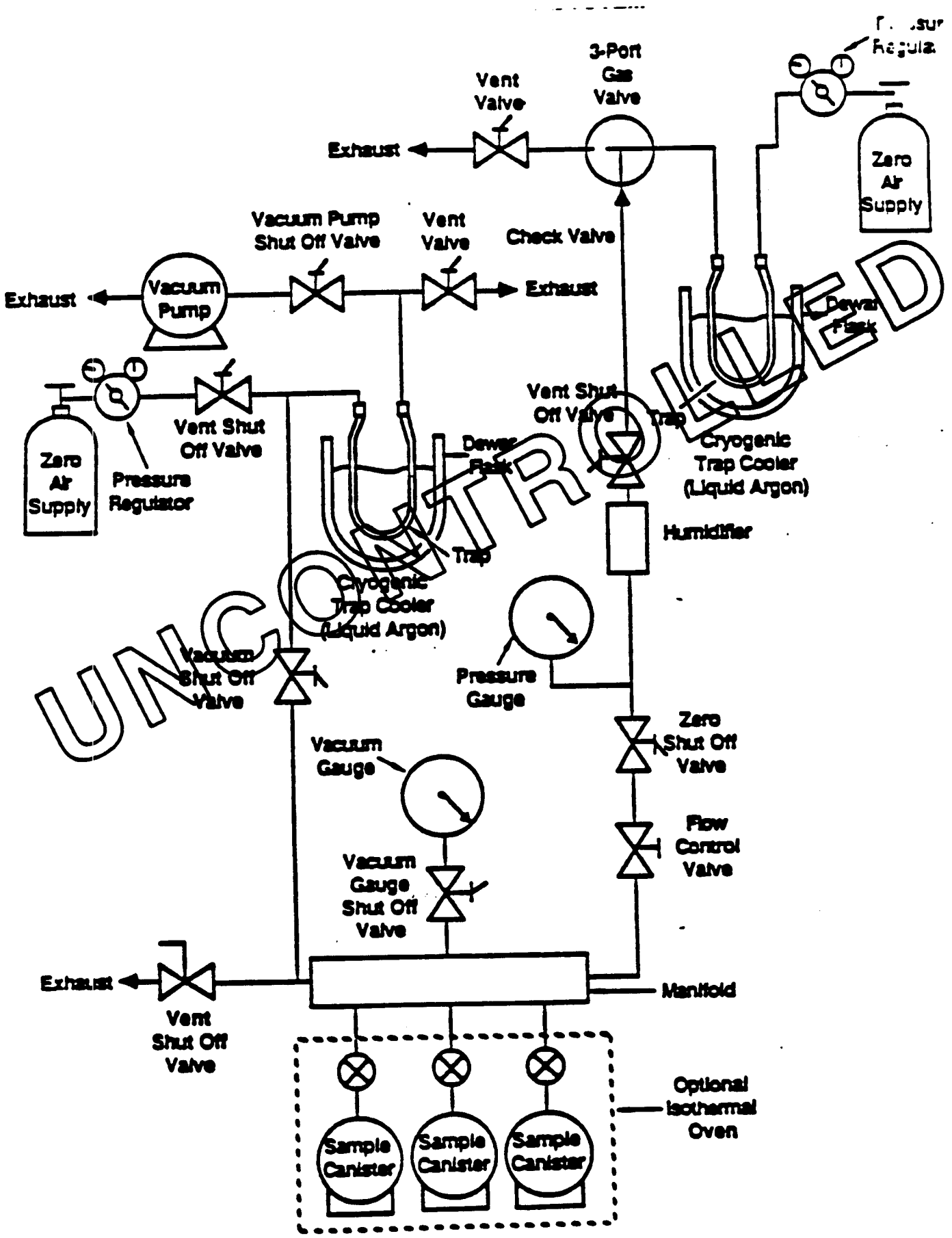

UNCONTROLLED

SAMPLER CONFIGURATION FOR SUBATMOSPHERIC PRESSURE OR PRESSURIZED CANISTER SAMPLING

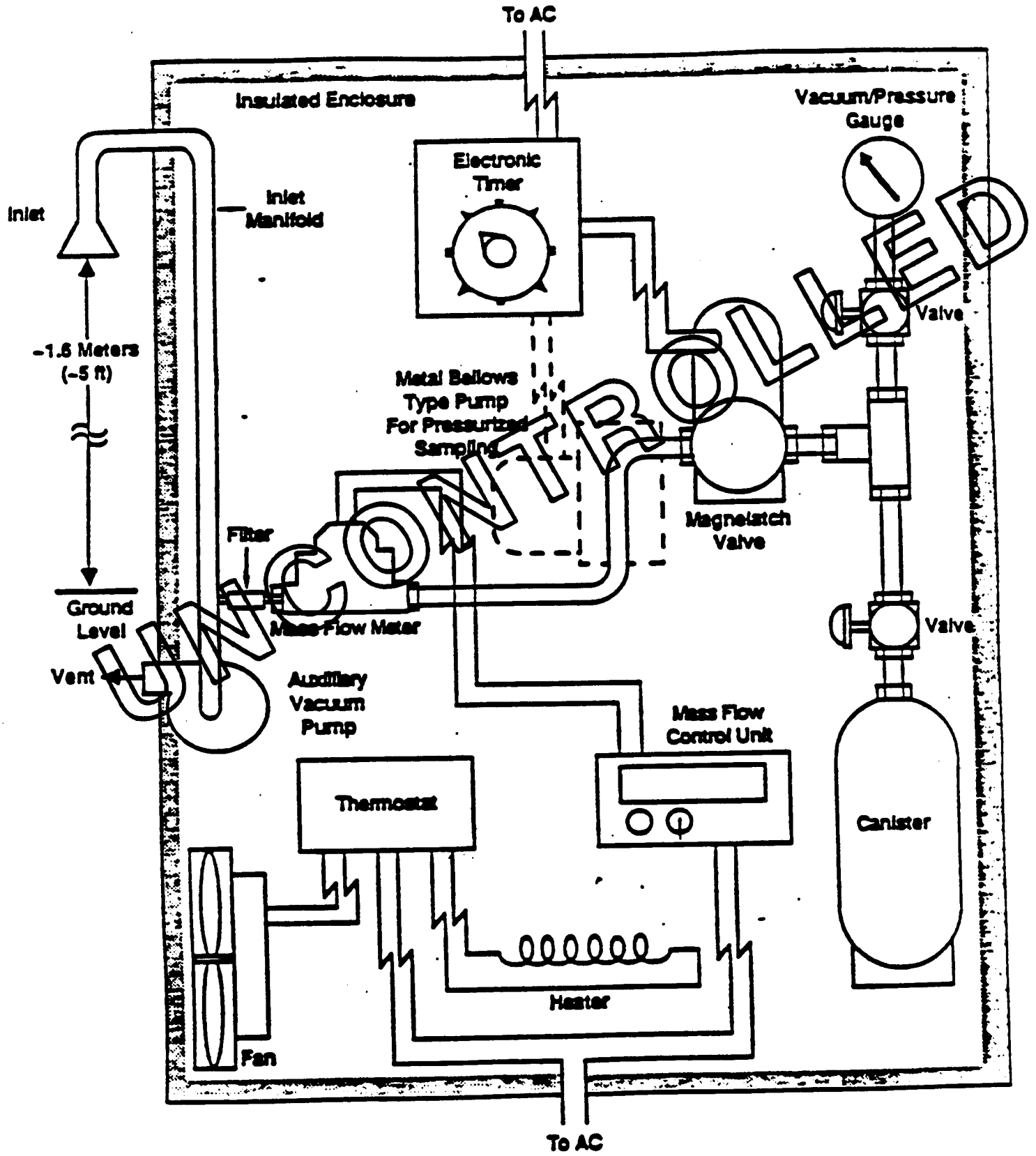

UNCONTROLLED

ALTERNATIVE SAMPLER CONFIGURATION FOR PRESSURIZED CANISTER SAMPLING

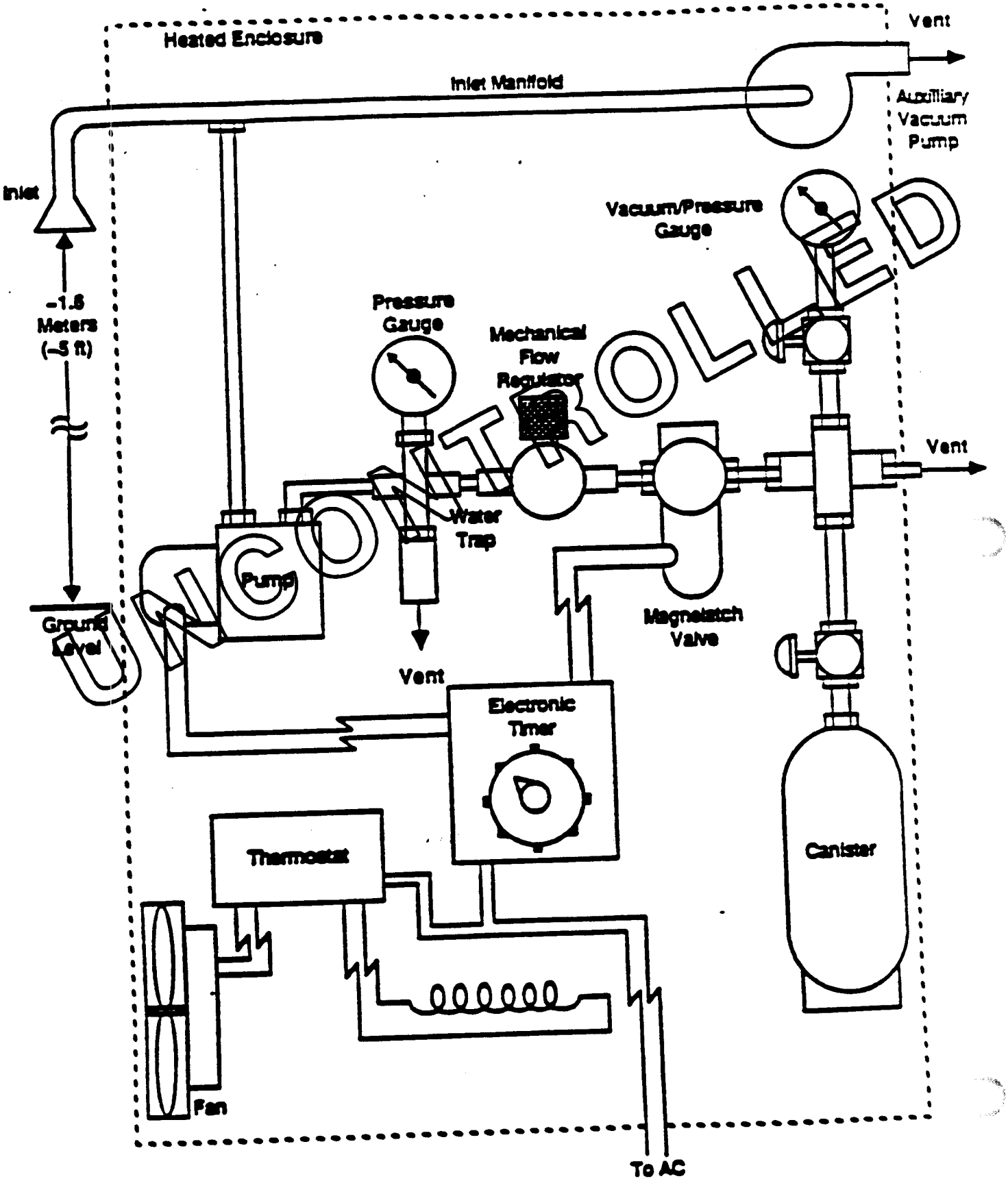

UNCONTROLLED

SCHEMATIC OF CALIBRATION SYSTEM AND MANIFOLD FOR: (a) ANALYTICAL SYSTEM CALIBRATION, (b) TESTING CANISTER SAMPLING SYSTEM AND, (c) PREPARING CANISTER TRANSFER STANDARDS

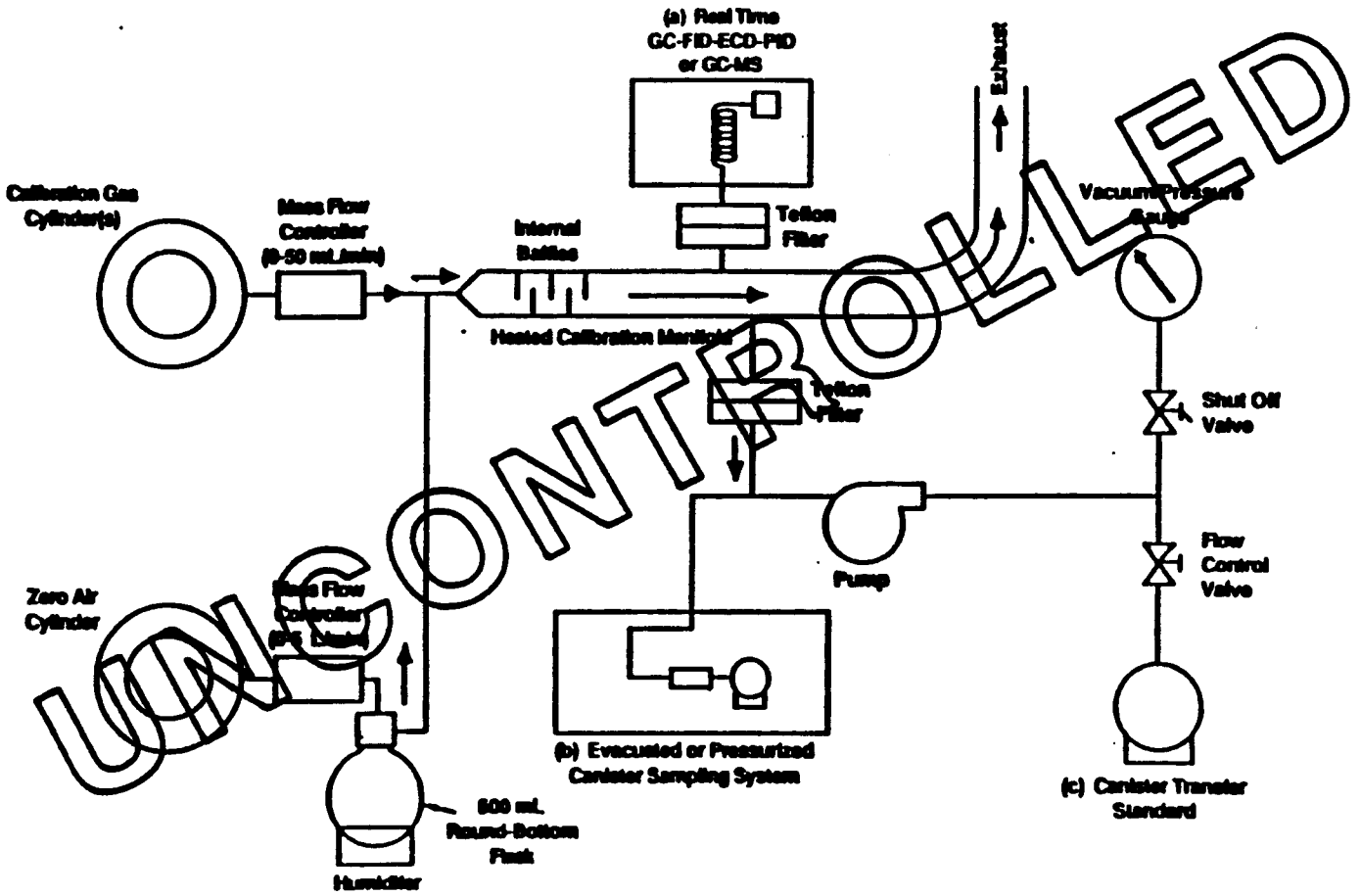

UNCONTROLLED

CANISTER ANALYSIS UTILIZING GC-MS-SCAN-SIM ANALYTICAL SYSTEM WITH OPTIONAL FLAME IONIZATION DETECTOR WITH THE 6-PORT CHROMATOGRAPHIC VALVE IN THE SAMPLE DESORPTION MODE

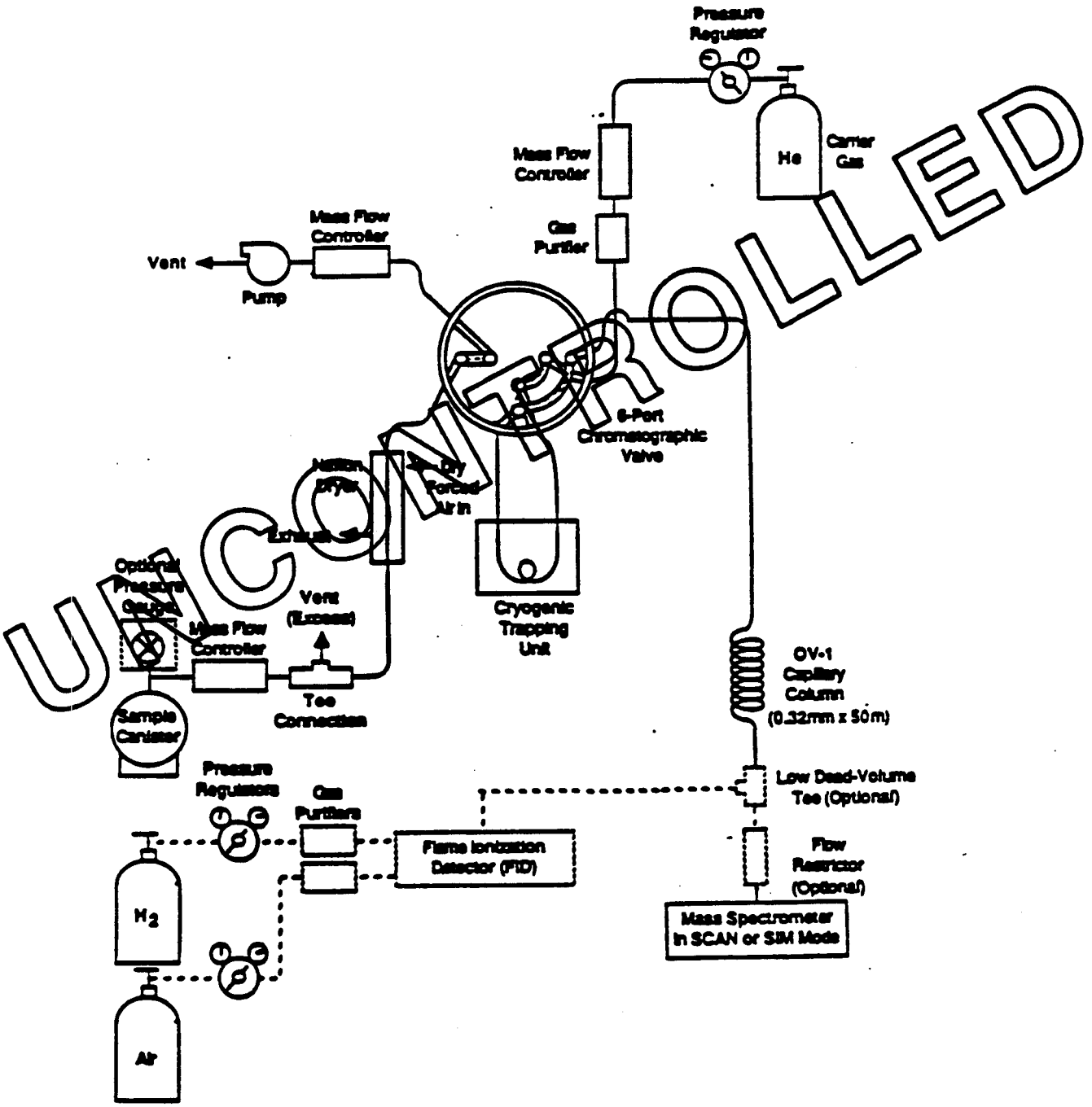

UNCONTROLLED

CANISTER CLEANING AND CERTIFICATION PROCEDURES

A. All canisters must be clean and free of any contaminants before sample collection.

B. All canisters are leak tested by pressurizing them to approximately 206 kPa (30 psig) with zero air. (Note: The canister cleaning system in Attachment A can be used for this task.) The initial pressure is measured, the canister valve is closed, and the final pressure is checked after 24 hours. If leak tight, the pressure should not vary more than ±13.8 kPa (±2 psig) over the 24 hour period.

C. A canister cleaning system may be assembled as illustrated in Attachment A. Cryogen is added to both the vacuum pump and zero air supply traps. The canister(s) are connected to the manifold. The vent shut-off valve and the canister valve(s) are opened to release any remaining pressure in the canister(s). The vacuum pump is started and the vent shut-off valve is then closed and the vacuum shut-off valve is opened. The canister(s) are evacuated to < 0.05 mm Hg (for at least one hour). (Note: On a daily basis or more often if necessary, the cryogenic traps should be purged with zero air to remove any trapped water from previous canister cleaning cycles.)

D. The vacuum and vacuum/pressure gauge shut-off valves are closed and the zero air shut-off valve is opened to pressurize the canister(s) with humid zero air to approximately 206 kPa (30 psig). If a zero gas generator system is used, the flow rate may need to be limited to maintain the zero air quality.

E. The zero shut-off valve is closed and the canister(s) are allowed to vent down to atmospheric pressure through the vent shut-off valve. The vent shut-off valve is closed. Steps C through E are repeated two additional times for a total of three (3) evacuation/pressuration cycles for each set of canisters.

F. At the end of the evacuation/pressuration cycle, the canister is pressurized to 206 kPa (30 psig) with humid zero air. The canister is then analyzed by a GC-MS or GC-FID-ECD analytical system. Any canister that has not tested clean (compared to direct analysis of humidified zero air of less than 0.2 ppbv of targeted VOCs) should not be used. As a "blank" check of the canister(s) and cleanup procedure, the final humid zero air fill of 100% of the canisters is analyzed until the cleanup system and canisters are proven reliable (less than 0.2 ppbv of targets VOCs). The check can then be reduced to a lower percentage of canisters.

G. The canister is reattached to the cleaning manifold and is then reevacuated to <0.05 mm Hg and remains in this condition until used. The canister valve is closed. The canister is removed from the cleaning system and the canister connection is capped with a stainless steel fitting. The canister is now ready for collection of an air sample. An identification tag is attached to the neck of each canister for field notes and chain-of-custody purposes.

UNCONTROLLED

SAMPLING SYSTEM CLEANING AND CERTIFICATION PROCEDURES

Cleaning Sampling System Components

A. Sample components are disassembled and cleaned before the sampler is assembled. Nonmetallic parts are rinsed with HPLC grade deionized water and dried in a vacuum oven at 50°C. Typically, stainless steel parts and fittings are cleaned by placing them in a beaker of methanol in an ultrasonic bath for 15 minutes. This procedure is repeated with hexane as the solvent.

B. The stainless steel parts are then rinsed with HPLC grade deionized water and dried in a vacuum oven at 100°C for 12 to 24 hours.

C. Once the sampler is assembled, the entire system is purged with humid zero air for 24 hours.

Humid Zero Air Certification - (see Section 6.1)

(Note: In the following sections, "certification" is defined as evaluating the sampling system with humid zero air and humid calibration gases that pass through all active components of the sampling system. The system is "certified" if no significant additions or deletions [less than 0.2 ppbv of targeted compounds] have occurred when challenged with the test gas stream.)

A. The cleanliness of the sampling system is determined by testing the sampler with humid zero air without an evacuated gas cylinder, as follows.

B. The calibration system and manifold are assembled, as illustrated in Attachment G. The sampler (without an evacuated gas cylinder) is connected to the manifold and the zero air cylinder activated to generate a humid gas stream (2 l/min) to the calibration manifold (see Attachment G [b]).

C. The humid zero gas stream passes through the calibration manifold, through the sampling system (without an evacuated canister) to a GC-FID-ECD analytical system at 75 cm^3/min so that 40 cm^3/min is pulled through the six-port valve and routed through the cryogenic trap (see EPA reference Compendium Method T0-14, Section 10.2.2.1) at the appropriate time while the extra sample is vented. (Note: The exit of the sampling system [without the canister] replaces the canister in Attachment H.) After the sample (400 ml) is preconcentrated on the trap, the trap is heated and the VOCs are thermally desorbed onto the head of the capillary column. Since the column is at -50°C, the VOCs are cryofocussed on the column. Then, the oven temperature (programmed) increases and the VOCs begin to elute and are detected by a GC-MS (see EPA reference Section 10.2) or the GC-FID-ECD. The analytical system should not detect greater than 0.2 ppbv of targeted VOCs in

UNCONTROLLED

order for the sampling system to pass the humid zero air certification test. Chromatograms of a certified sampler and contaminated sampler are illustrated in Attachment J (a) and (b), respectively. If the sampler passes the humid zero air test, it is then tested with humid calibration gas standards containing selected VOCs at concentration levels expected in field sampling (e.g., 0.5 to 2 ppbv) as follows:

Sampler System Certification with Humid Calibration Gas Standards - (see Section 6.1)

A. Assemble the dynamic calibration system and manifold as illustrated in Attachment G.

B. Verify that the calibration system is clean (less than 0.2 ppbv of targeted compounds) by sampling a humidified gas stream, without gas calibration standards, with a previously certified clean canister (see EPA reference Section 12.1).

C. The assembled dynamic calibration system is certified clean if less than 0.2 ppbv of targeted compounds are found.

D. For generating the humidified calibration standards, the calibration gas cylinder(s) (see EPA reference Section 8.2) containing nominal concentrations of 10 ppmv in nitrogen of selected VOCs, are attached to the calibration system, as outlined in EPA reference Section 10.2.3.1. The gas cylinders are opened and the gas mixtures are passed through 0 to 10 cm^3/min certified mass flow controllers to generate ppb levels of calibration standards.

E. After the appropriate equilibrium period, attach the sampling system (containing a certified evacuated canister) to the manifold, as illustrated in Attachment G (a).

F. Sample the dynamic calibration gas stream with the sampling system according to EPA reference Section 9.2.1. (Note: To conserve generated calibration gas, bypass the canister sampling system manifold and attach the sampling system to the calibration gas stream at the inlet of the in-line filter of the sampling system so the flow will be less than 500 cm^3/min.)

G. Concurrent with the sampling system operation, real-time monitoring of the calibration gas stream is accomplished by the on-line GC-MS or GC-multidetector analytical system (Attachment G [b]) to provide reference concentrations of generated VOCs.

H. At the end of the sampling period (normally same time period used for anticipated sampling), the sampling system canister is analyzed and compared to the reference GC-MS or GC-multidetector analytical system to determine if the concentration of the targeted VOCs was increased or decreased by the sampling system.

I. A recovery of between 90% and 110% is expected for all targeted VOCs.

UNCONTROLLED

CANISTER SAMPLING FIELD DATA SHEET

LOS ALAMOS NATIONAL LABORATORY
ENVIRONMENTAL RESTORATION
CANISTER SAMPLING FIELD DATA SHEET

Date: _____ Sheet _____ of _____

Expected Sample Concentration
☐ HIGH (≥ 1000 ppm ☐ LOW (≤ 1000 ppm)

Technical Area _____ Operable Unit _____

Site Work Plan: _____

Signature: _____

AFFIX FIRST SAMPLE STICKER HERE

AFFIX LAST SAMPLE STICKER HERE

SAMPLING INFORMATION

Canister Serial No.: _____ Canister Leak Check Date: _____

TEMPERATURE

	OU	AMBIENT	MAXIMUM	MINIMUM
START				
STOP				

PRESSURE (psig)

CANISTER PRESSURE

SAMPLING TIMES

	LOCAL TIME	ELAPSED TIME METER READING
START		
STOP		

FLOW RATES (cm^3/min)

MANIFOLD FLOW RATE	CANISTER FLOW RATE	FLOW CONTROLLER READOUT

Zero Reading: _____ cm^3/min

SAMPLING SYSTEM CERTIFICATION DATE: _____

QUARTERLY RECERTIFICATION DATE: _____

LABORATORY INFORMATION:

DATE RECEIVED: _____

RECEIVED BY: _____

INITIAL PRESSURE: _____

FINAL PRESSURE: _____

DILUTION FACTOR: _____

ANALYSIS

GC-FID-ECD DATE: _____

GC-MSD-SCAN DATE: _____

GC-MSD-SIM DATE: _____

RESULTS: _____

GC-FID-ECD: _____

GC-MSD-SCAN: _____

GC-MSD-SIM: _____

☐ CHECK HERE IF CONTINUED ON BACK OF THIS SHEET

ER-SOP-06.22, R0 5/91

UNCONTROLLED
CONTACT THE ER TEAM OFFICE FOR MASTER FORMS

DATA FORM COMPLETION

Use an indelible dark ink pen. Make an entry in each entry blank. For entry blanks for which no data are obtained, enter UNK for Unknown, NA for Not Applicable, ND for Not Done, etc. To change an entry, draw a single line through it, add the correct information above it, and date and initial the change. For all forms, complete the following information:

1. Technical Area (TA). Two-digit number indicating in which area the sampling is being done

2. Operable Unit (OU). Four-digit number indicating the operable unit in which the sampling is being done

3. Expected Sample Concentration. Value determined by field measurements. This value is critical for the Laboratory. Make every effort to make a determination.

4. Site Work Plan. The name of the plan and it's date of application.

5. Signature: A legible signature of the field team leader or his designate.

6. Canister Serial Number. The number that is stamped on the connector. This is not the sample number.

7. Temperature

   Interior. The temperature in the insulated enclosure
   Ambient. The temperature outside the insulated enclosure
   Maximum. The maximum temperature inside the box during sampling
   Minimum. The minimum temperature inside the box during sampling

8. Pressure. The starting pressure for subatmospheric/pressure will be negative. The ending pressure for subatmospheric should be negative and positive for pressure sampling

9. Sampling Times. Record the start and stop times and the elapsed time from the meter

10. Flow rates

    Manifold Flow Rate. Flow rate for inlet flow manifold
    Canister Flow Rate. Flow rate downstream of the mass flowmeter
    Flow Controller readout. The value read directly from the Mass Flow Control Unit
    Zero reading. This is taken time mass flowmeter (Refer to Section 6.0E)

11. Sampling System Certification Date. The date when the system was initially certified

12. Quarterly Recertification Date. Sample equipment must be calibrated on a quarterly basis

13. Laboratory Information. Data filled out by the Laboratory

UNCONTROLLED

EXAMPLE OF HUMID ZERO AIR TEST RESULTS FOR (a) A CLEAN SAMPLER AND (b) A CONTAMINATED SAMPLER

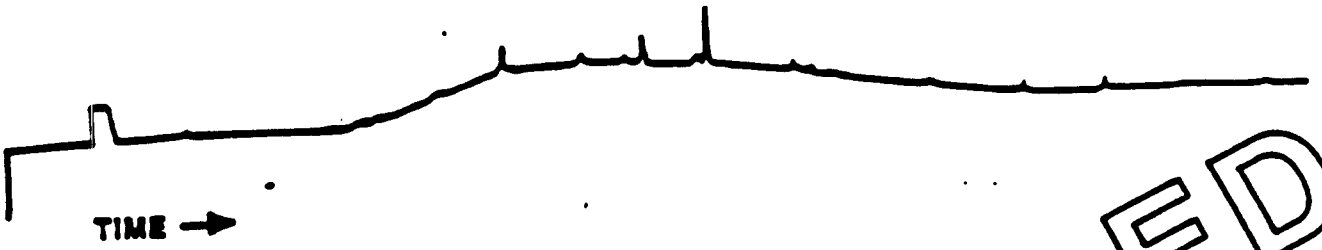

(a). Certified Sampler

UNCONTROLLED

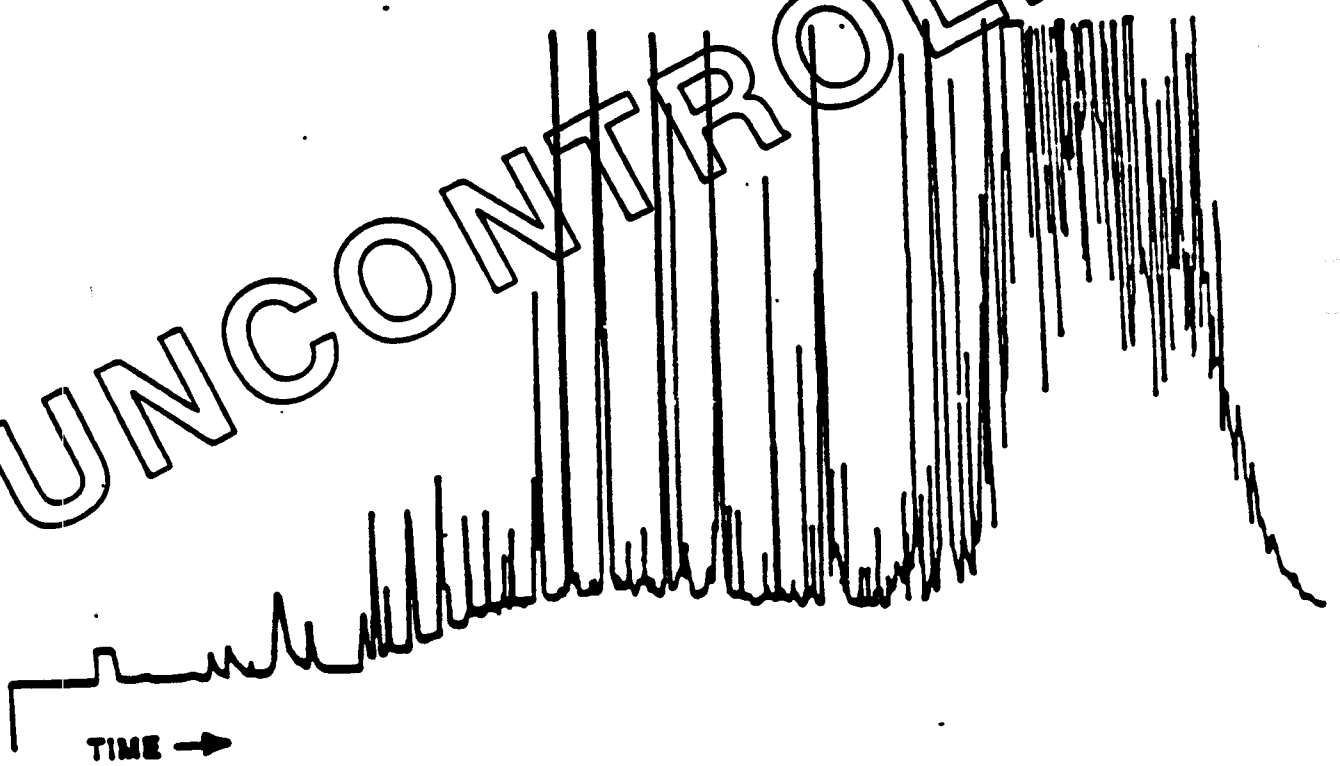

(b). Contaminated Sampler

USGS Report No. 13. The Single-Stage Sampler For Suspended Sediment, 1961.

8.0 RECORDS

It is the responsibility of the Operable Unit Project Leader to assure that all records associated with data collection using this procedure will be transferred to the Environmental Restoration (ER) Records Processing Facility in accordance with the Procedure for Los Alamos National Laboratory (LANL) Records Management (LANL-ER-AP-02.1).

9.0 ATTACHMENTS

Attachment A - Example of Single-Stage Sampler

UNCONTROLLED

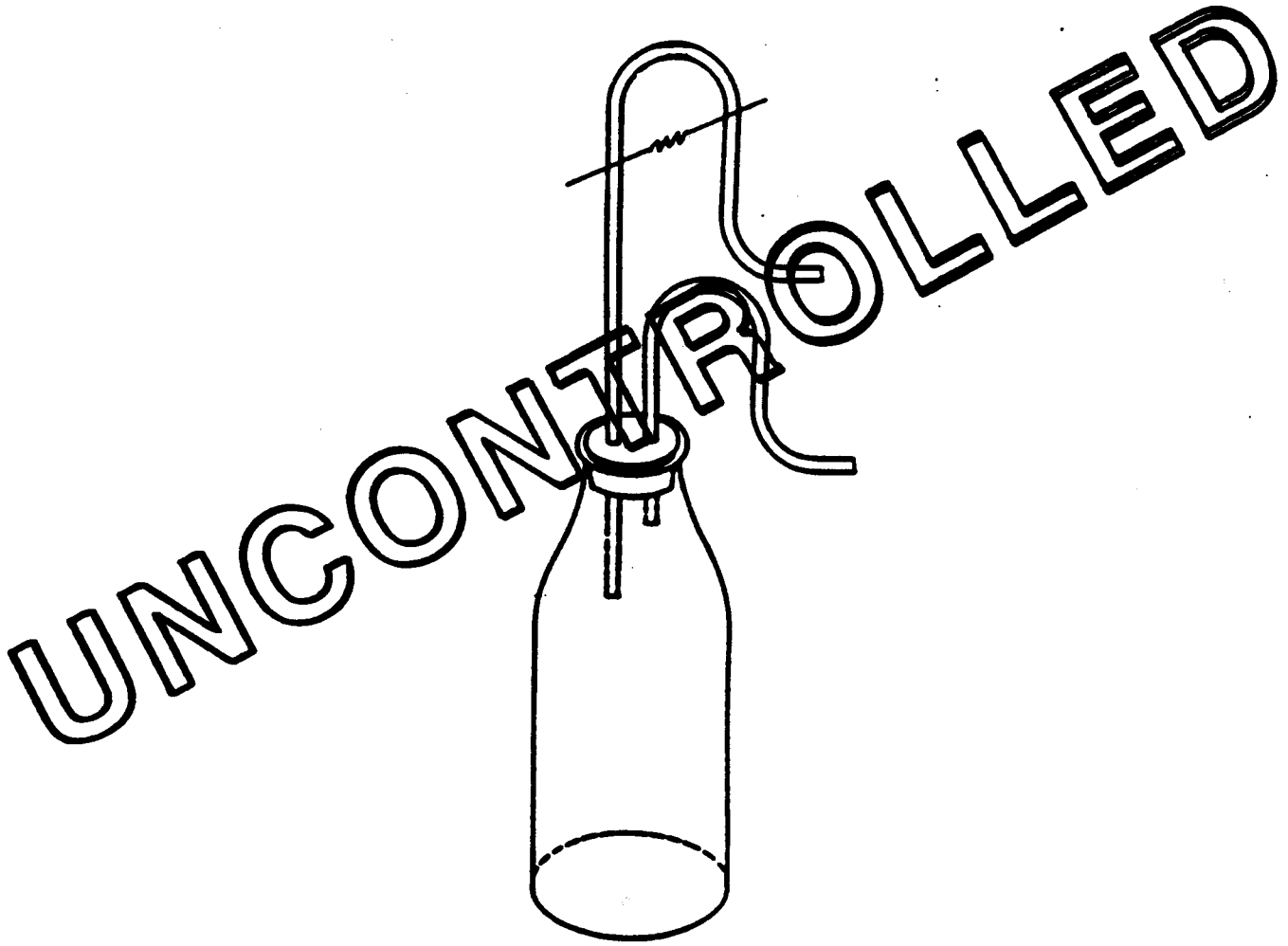

Example of a Single-Stage Sampler

Los Alamos National Laboratory **Environmental Restoration Program** **Standard Operating Procedure**	No: LANL-ER-SOP-06.23 Rev: 0

MEASUREMENT OF GAMMA-RAY FIELDS USING A SODIUM IODIDE DETECTOR

	(Print Name)	(Signature)	(Date)
Prepared by	BETHANIE HUCKER	[signature]	4/20/93
Quality Review by	James W. Heyser	[signature]	4/20/93
Technical Review by	JOHN HALL	[signature]	4-21-93
PM Approval	Robert W Vocke	[signature]	4-26-93
QPPL Approval	A. E. NORRIS	[signature]	4-26-93

Effective Date: May 19, 1993

UNCONTROLLED

TABLE OF CONTENTS

1.0 PURPOSE 2
2.0 SCOPE 2
3.0 DEFINITIONS 2
4.0 BACKGROUND AND/OR CAUTIONS 2
5.0 EQUIPMENT 3
6.0 PROCEDURE 3
7.0 REFERENCES 4
8.0 RECORDS 4
9.0 ATTACHMENTS 4

UNCONTROLLED

Measurement of Gamma-Ray Fields Using A Sodium Iodide Detector

1.0 PURPOSE

This procedure provides instructions for making count-rate measurements of gamma-ray fields with a sodium iodide (NaI) detector.

2.0 SCOPE

This procedure includes activities required to conduct a radiation survey to quantitatively measure low-level gamma emitters.

2.1 Applicability

This procedure applies to site workers who will be conducting the field radiation survey.

2.2 Training

Site workers conducting the radiation survey will be trained health physicists or health physics technicians (or have equivalent education or experience).

UNCONTROLLED

3.0 DEFINITIONS

A. Gamma rays: highly penetrating forms of radiation. As they penetrate the body, gamma rays can damage living cells, and are therefore, considered an external hazard.

B. Radioactivity: the physical property, or capability, of certain elements to release particles or waves of energy. As radioactive elements disintegrate, they exhibit radioactivity by emitting gamma rays and other particles and radiation.

4.0 BACKGROUND AND/OR CAUTIONS

This radiation survey is used to quantitatively measure gamma rays from radionuclides in the area. It may be used to indicate contamination by gamma emitters after the entire area is surveyed and mapped to define radioactive hot spots or plumes. The NaI detector is used primarily to measure increases in background radiation and to locate and measure sources of radiation that cause the background readings to change. Note that elevated count-rate data must be carefully interpreted because uncontaminated areas can demonstrate high readings if they are next to an area contaminated with gamma emitters.

5.0 EQUIPMENT

Equipment and supplies to be used are listed below.

Portable ratemeter/scaler and sodium iodide detector (1 inch by 1 inch)

D-cell batteries

Gamma check source

6.0 PROCEDURE

PRIOR TO MEASUREMENTS

A. Refer to the operator's manual for specific instructions on the operation of the NaI detector.

B. Inspect the equipment and connector cable (where appropriate) for obvious damage or a frayed or broken cable.

C. Check the battery condition and if the check indicates low battery power, replace the batteries.

D. Check the calibration sticker and ensure that the instrument has been calibrated within the NaI detector specific time frame (e.g., every 6 months for a Ludlum 12S NaI Detector).

E. Perform a source check and note the response of the detector.

UNCONTROLLED

GENERAL OPERATING PROCEDURE

A. To survey radiation levels in an area, walk slowly, listen for increases in audible response, and look for needle deflection indicating an increase in radiation levels. In general, the instrument should be held approximately 3 feet above the ground (waist level). To determine the maximum radiation levels, vary the height and direction of the detector. When an increase is noted, hold the instrument at that point for at least 15 seconds (or as long as indicated in the operations manual for specific models) to obtain an accurate count rate.

B. To obtain a contact reading of an object or surface, place the instrument directly on the object or surface and hold for at least 15 seconds (or as long as indicated in the operations manual for specific models) to obtain an accurate count rate. If the object or surface is known or suspected to have loose contamination, exercise good radioactive contamination safety practices, and do not allow the instrument to come in contact with the surface.

C. When scanning an object with the instrument , scan at 1-2 inches per second (or as quickly as indicated in the operations manual for specific models).

D. Give particular attention to drain lines, piping, ductwork, pits, sumps, or any other likely places where radioactivity may be present.

E. Record all field survey point readings and other relevant data.

F. If necessary, ensure that all survey and sample locations are properly staked with a visible location identification.

G. At the end of field activities, ensure that all equipment is accounted for, decontaminated, and ready for shipment.

UNCONTROLLED

7.0 REFERENCES

A. The Ludlum 12S Radiac Training Guide. Prepared by Afftrex, LTD. Pittsburgh, PA.

B. Instruction Manual for the Ludlum 12S Sodium Iodide Detector. Ludlum Measurements, Inc. Sweetwater, TX.

8.0 RECORDS

All records generated as a result of this procedure will be submitted to the Record Processing Facility. These records include but are not limited to:

Daily Activity Log which will include all daily activities and any deviations from this procedure.

9.0 ATTACHMENTS

N/A

Los Alamos National Laboratory **Environmental Restoration Program** Standard Operating Procedure	No: LANL-ER-SOP-06.24 Rev: 0

SAMPLE COLLECTION FROM SPLIT-SPOON SAMPLERS AND SHELBY TUBE SAMPLERS

	(Print Name)	(Signature)	(Date)
Prepared by	Linda Fluk	Linda Fluk	4-1-93
Quality Review by	James W. Heyser	J. W. Heyser	4/2/93
Technical Review by	C. Greenwell	Charles Greenwell	4-5-93
PM Approval	Robert W Vocke	Robert W Vocke	4-26-93
QPPL Approval	A.E. Norris	A.E. Norris	4-26-93

Effective Date: May 19, 1993

UNCONTROLLED

TABLE OF CONTENTS

1.0 PURPOSE 2

2.0 SCOPE 2

2.1 Applicability 2

2.2 Training 2

3.0 DEFINITIONS 2

4.0 BACKGROUND AND/OR CAUTIONS 2

4.1 Introduction 2

4.2 Cautions 3

5.0 EQUIPMENT 4

6.0 PROCEDURE 4

7.0 REFERENCES 6

8.0 RECORDS 6

UNCONTROLLED

SAMPLE COLLECTION FROM SPLIT-SPOON SAMPLERS AND SHELBY TUBE SAMPLERS

1.0 PURPOSE

This standard operating procedure (SOP) provides instructions that are to be followed in collecting soil and sediment samples from split-spoon samplers or Shelby Tube samplers.

2.0 SCOPE

2.1 Applicability

This procedure is applicable for collection of soil and sediment samples from split-spoon samplers or Shelby Tube samplers for the Environmental Restoration Program.

2.2 Training

Field team members must document that they have read and understand this procedure, and all procedures in Section 1.0 (General Instructions) of the Laboratory's Environmental Restoration Standard Operating Procedures (SOPs).

UNCONTROLLED

3.0 DEFINITIONS

A. Shelby Tube: A single-piece metal tube of thin gauge which is forcefully driven into the soil or sediment at the bottom of a bore hole in order to collect an undisturbed subsurface soil or sediment sample.

B. Split-spoon Sampler: A multiple piece sampler which is threaded on to the end of a drill rod or hand auger and is forcefully driven into the soil or sediment at the bottom of a bore hole in order to collect an undisturbed subsurface soil or sediment sample.

4.0 BACKGROUND AND/OR CAUTIONS

4.1 Introduction

A split-spoon sampler is used to take subsurface soil or sediment samples by being forcefully driven into the soil or sediment at the bottom of a bore hole. Samples may be retrieved along the entire length of the bore hole to obtain an unbroken record of the subsurface layers, or samples may be retrieved at selected intervals. Continuous samples may also be taken from the surface down to a specified level or from a subsurface point downward.

The split-spoon is threaded on to the end of the drill rod in place of the drill bit. The sampler is lowered on the drill rod to the bottom of the boring by heavy steel cable connected to the drilling mast. The sampler is forced into the soil by a drive weight which is dropped repeatedly onto the drive head located at the top of the drill rod. Weights up to 350 pounds are available, but the most commonly used weight for a 2-inch diameter sampler is a 140-pound weight. The weight is typically allowed to fall a distance of 30 inches. The sampler is driven into the sediment to a depth about 6 inches shorter than the length of the sampler itself. Split-spoon samplers are manufactured in 18- and 24-inch lengths with 2- to 3-inch outside diameters.

Occasionally bedrock or extremely compacted sediments are encountered which make further advance of the sampler extremely difficult or impossible without damage to the sample. This condition is known as "refusal" and is defined as a "penetration of less than 1 foot for 100 blows" (a blow is the act of striking a drive rod with a drive weight). Six inches for 50 blows is also commonly recognized as refusal. Upon refusal, the bore hole is to be either abandoned or the sampler removed and replaced by a drill bit.

Split-spoon sampling may also be performed with the hand auger. The split-spoon is threaded on to the end of the hand driven drill rod in place of the auger/bit. The split-spoon is advanced into the bore hole by manually turning the hand auger. In all other respects, hand auger split-spoon sampling is identical to hydraulically driven split-spoon sampling.

A similar type of sampling apparatus is the "Shelby" tube. While the split-spoon is a multiple piece sampler, the Shelby Tube is a single-piece metal tube of thinner gauge than the split-spoon. Like the split-spoon, soil is forced into the Shelby Tube and stored inside. However because the Shelby Tube is typically advanced hydraulically, it allows the capture of a relatively undisturbed sample. The Shelby Tube requires much less effort to push into the soil due to its thinner walls and sharp cutting edge. Care must be taken not to compress the soil sample by forcing the tube deeper than its own length.

UNCONTROLLED

4.2 Cautions

This procedure is limited to the activities of collecting soil and sediment samples for field monitoring and laboratory analysis for concentrations of hazardous and radioactive constituents or for soil/sediment physical characteristics. This SOP does not address the drilling activities, removal of time sensitive geologic analytical samples, core documentation, lithologic description, packaging of core material or temporary storage of borehole materials at a drill site Sample Management Trailer.

5.0 EQUIPMENT

Equipment needed for sample collection using split-spoon and Shelby Tube samplers is as follows:

_____ 2.5-inch, 2.0-inch, or 1.5-inch internal diameter (ID) split-spoon drive sampler

_____ 2.5-inch, 2.0-inch, or 1.5-inch brass liners and sealing materials (plastic end caps, Teflon seals, non-adhesive silicon or Teflon tape, ziplock bags)

_____ Shelby tube sampler

_____ Work table surface

_____ Knife/blade

_____ Sampling tools

_____ Buckets

_____ High purity laboratory detergent, such as Alconox

_____ 0.1N nitric acid (if necessary)

_____ Deionized water

_____ Chain of Custody/Request for Analysis forms

UNCONTROLLED

6.0 PROCEDURE

A. Coordinate the sampling effort with the Health and Environmental Chemistry Group (EM-9) and Sample Coordination Facility (SCF). They will give guidance regarding sample containers and preservation.

B. Label all bottles and complete documentation (SOP-01.02, Sample Containers and Preservation, and SOP-01.04, Sample Control and Field Documentation). Fill out all information except sampler's name/initials and the actual date and time.

C. Assemble the sampler and ensure that all sampling equipment has been properly decontaminated. If decontamination cannot be guaranteed, decontaminate the sampler following guidance in step M of this procedure.

D. Note exact location of the hole where the sample has been collected in the field notebook. If not tied in to a surveyed grid system or some other well documented system, measure the distances and direction from stationary

landmarks. If possible, photograph the location. As appropriate, spray paint or wooden stakes may also be used to mark the location.

E. Collect the split-spoon sampler or Shelby Tube sampler from the driller and place it on a secure bench or rack. If a Shelby Tube sampler is used, submit the entire tube to the laboratory.

F. Separate the split-spoon sampler tube (a flat-blade screwdriver is useful), exposing either the sample or, if used, brass liners. Run a knife between the liners to separate the tube.

G. If volatile organic compound (VOC) analysis is required, immediately seal the cut ends of the split-spoon sampler with Teflon film. The field team member will log the borehole material in the field notebook at this time. The field team member will also record in the field notebook the borehole identification number, run number, depth interval, and percent recovery (as appropriate).

H. If no liner is used, the sample may be collected from the open split-spoon sampler using a decontaminated stainless steel spoon (or other appropriate sampling tool). The sample may be collected as a "composite" of several discrete points within the sampler or as a "grab" sample from one discrete point within the sampler. The sample collection strategy and rationale must be discussed and documented in the field notebook and/or daily logs.

I. If the samples are being analyzed for VOCs, collect the VOC fraction first. VOC sample containers should be tightly packed, using a decontaminated stainless steel spoon (or other appropriate sampling tool), leaving no airspace in the sample container.

J. For composite samples (where VOCs are not an analytical parameter) collect small amounts of soil or sediment from several discrete points within the split-spoon sampler using a decontaminated stainless steel spoon (or other appropriate sampling tool), and place the soil or sediment in a decontaminated stainless steel or plastic bucket or a plastic ziplock bag. Mix the soil or sediment several times until the material is well mixed and homogeneous. Sampling points for the composite sample may be selected randomly, at regular intervals, or based on visual inspection. Alternatively, place the entire core into a decontaminated stainless steel or plastic bucket and mix until the sample is homogenized. The sample collection strategy and rationale must be discussed and documented in the field notebook and/or daily logs.

K. Decontaminate the outside of the sample containers, bag the samples in a ziplock bag, and place the samples in a cooler at the sampling site. The cooler should contain ice as specified by the site-specific sample plan.

L. Field duplicates may be collected either by compositing the soil in a decontaminated stainless steel or plastic bucket (a composited field duplicate) or sampling from a close adjacent location (a collocated field duplicate). Collocated field duplicates are to be collected from adjacent liners. Follow the site-specific

UNCONTROLLED

sample plan and document the duplicate collection process in the field notebook and/or daily logs.

M. Following each sampling event, wash the split-spoon sampler with high purity laboratory detergent and double rinse the components with deionized water, methanol, 0.1N nitric acid, and/or other rinse solution as appropriate or as specified in the site-specific sampling plan. Brass liners and Shelby Tube samplers should be cleaned in the laboratory prior to use and rinsed in the field with deionized water prior to use.

7.0 REFERENCES

LANL-ER-QPP, Quality Program Plan for Environmental Restoration Activities
LANL-ER-SOPs in Section 1.0, General Instructions

8.0 RECORDS

All records generated as a result of this procedure will be submitted to the Record Processing Facility. These records include but are not limited to the Daily Activity Log which will include all daily activities and any deviations from this procedure.

UNCONTROLLED

Los Alamos National Laboratory **Environmental Restoration Program** Standard Operating Procedure	No: LANL-ER-SOP-06.25 Rev: 0

TOTAL SUSPENDED PARTICULATE AIR SAMPLING

	(Print Name)	(Signature)	(Date)
Prepared by	BETHANIE Hooker	[signature]	5/3/93
Quality Review by	IVAN WACHLER	[signature]	5/3/93
Technical Review by	Linda Flint	[signature]	5-3-93
PM Approval	Robert W Vocke	[signature]	5/24/93
QPPL Approval	~~A. E. Norris~~ A.E. NORRIS	[signature]	~~May 24, 1993~~

Effective Date: June 25.1993

UNCONTROLLED

TABLE OF CONTENTS

1.0 PURPOSE 2
2.0 SCOPE 2
2.1 APPLICABILITY 2
2.2 TRAINING 2
3.0 DEFINITIONS 2
4.0 BACKGROUND AND/OR CAUTIONS 2
5.0 EQUIPMENT 3
6.0 PROCEDURE 3
7.0 REFERENCES 5
8.0 RECORDS 5
9.0 ATTACHMENTS 5

UNCONTROLLED

Total Suspended Particulate Air Sampling

1.0 PURPOSE

This procedure describes the methods for the determination of suspended particulate matter in the atmosphere using a high-volume air sampler.

2.0 SCOPE

2.1 APPLICABILITY

This procedure is applicable for air sampling using a high-volume air sampler.

2.2 TRAINING

All site workers who operate a high-volume air sampler should document that they have read and do understand this procedure, the operation manual for the high-volume sampler, and the procedures in Section 1.0, General Instructions, of the Los Alamos National Laboratory's Environmental Restoration Standard Operating Procedures (LANL-ER-SOPs).

UNCONTROLLED

3.0 DEFINITIONS

N/A

4.0 BACKGROUND AND/OR CAUTIONS

This method provides a measurement of the mass concentration of total suspended particulate matter (TSP) in ambient air for determining compliance with the primary and secondary national ambient air quality standards for particulate matter. The measurement process is nondestructive, and the size of the sample collected is usually adequate for subsequent chemical analysis.

An air sampler properly located at the measurement site draws a measured quantity of ambient air into a covered housing and through a filter during a 24 hour or other appropriate sampling period. The sampler flow rate and the geometry of the shelter favor the collection of particles up to 25-50 microns (µm) (aerodynamic diameter), depending on wind speed and direction. The filters used are specified to have a minimum collection efficiency of 99 percent as measured by the American Society for Testing and Materials (ASTM)-2986 method for particles of 0.3 µm diameter.

The filter is weighed (after moisture equilibration) before and after use to determine the net weight (mass) gain. The total volume of air sampled, corrected to the Environmental Protection Agency (EPA) standard conditions [25°C, 760 millimeters mercury (mm Hg)], is determined from the measured flow rate and the sampling time. The concentration of TSP matter in the ambient air

is computed as the mass of collected particles divided by the volume of air sampled, corrected to standard conditions, and is expressed in micrograms per standard cubic meter (µg/std m^3). For samples collected at temperatures and pressures significantly different than standard conditions, these corrected concentrations may differ substantially from actual concentrations (micrograms per actual cubic meter), particularly at high elevations. The actual particulate matter concentration should be calculated using the actual temperature and pressure during the sampling period.

The approximate concentration range of the method is 2 to 750 µg/std m^3. The upper limit is determined by the point at which the sampler can no longer maintain the specified flow rate due to the increased pressure drop of the loaded particle size distribution, moisture content of the collected particles, and variability from filter to filter, among other things. The lower limit is determined by the sensitivity of the balance and by inherent sources of error.

At wind speeds between 1.3 and 4.5 meters per second (3 and 10 miles per hour), the high-volume air sampler has been found to collect particles up to 25 to 50 µm, depending on wind speed and direction. For filters that meet EPA specifications as described in 40 CFR 50, Appendix B, there is effectively no lower limit on the particle size collected.

UNCONTROLLED

5.0 EQUIPMENT

The equipment needed for this procedure is listed below.

High-volume air sampler
Filters
Cassette filter holder
Flow rate measurement devices
- Flow indicator (e.g., orifice, rotometer)
- Pressure indicator (e.g., manometer)

Thermometer
Barometer
Timing/control device
Flow rate transfer standard
Manila and glassine envelopes
Electrical generator, if necessary
Unleaded gasoline for generator, if necessary
Extension cords

6.0 PROCEDURE

1. Ensure that the high-volume air sampler has been calibrated within the past six months. If it has not been calibrated within the past six months, then calibrate the instrument according to the operations manual.

2. Number each filter with an unique identification number and ensure that the filters have been weighed (after moisture equilibration) at the laboratory which will analyze the filters.

3. Backlight each filter and inspect for pinholes, particles, and other imperfections; a filter with visible imperfections must not be used.

4. Read the operator's manual for the specific high-volume air sampler to be used.

5. Place sampler motor/blower unit and filter holder in the servicing position by raising both of them up until the filter holder is above the top level of the shelter. Then rotate the unit one-quarter turn, clockwise or counterclockwise (depending on placement), so that the filter holder hangs in the rectangular hole in the sampler support pan.

6. Remove faceplate part of the filter holder by loosening the four wing nuts, allowing the swing bolts to swing down out of the way.

7. Carefully center a numbered 8" x 10" filter, roughner side up, on the supporting screen of the filter holder. Properly align the filter on the screen so that when the faceplate is in position, the gasket will form an airtight seal on the outer edges of the filter.

8. Secure the filter with the faceplate, tighten the four swing bolts with sufficient pressure to avoid air leakage, lower the filter holder and sampler blower/motor unit to its normal operating position, and close the shelter.

9. Plug the high-volume air sampler into an outlet or a gasoline operated generator. If a generator is used, ensure that it is placed downwind of the high-volume air sampler.

10. Run motor/blower unit for 5 minutes to allow it to warm up.

11. Record the flow rate for the sampler using the rotometer.

12. Set the timer to start and stop the sampler for the specified time period. Record the start and stop times.

13. After the sampling period, record the flow rate, again using the rotometer.

14. Carefully remove the exposed filter from the supporting screen by holding it gently at the ends (not at the corners). Fold the filter lengthwise so that sample touches sample.

15. Place filter in a glassine or similar folder.

UNCONTROLLED

16. Record all pertinent field information on the Daily Activity Log. For example, all weather conditions (e.g., barometric pressure and temperature) and instrument readings should be noted.

7.0 REFERENCES

40 CFR Part 50, Appendix B

ASTM Standard 2986, "Filter Collection as Measured by the DOP Test", American Society for Testing and Materials, Philadelphia, PA, 19103.

8.0 RECORDS

The Operable Unit Project Leader is responsible for transfer of the records to the ER Record Processing Facility (MS M707) in accordance with procedures for LANL ER Records Management (LANL-ER-AP-02.1). The records which will be generated include but are not limited to the following:

Daily Activity Log which will include all daily activities and any deviations from this procedure.

9.0 ATTACHMENTS

N/A

UNCONTROLLED

Los Alamos National Laboratory **Environmental Restoration Program** Standard Operating Procedure	No: LANL-ER-SOP-06.26 Rev: 0

Core Barrel Sampling for Subsurface Earth Materials

Prepared by	Ron Conrad (Print Name)	Ron Conrad (Signature)	4/28/93 (Date)
Quality Review by	Larry Maassen (Print Name)	Larry Maassen (Signature)	4/29/93 (Date)
Technical Review by	Bruce Gallaher (Print Name)	Bruce Gallaher (Signature)	4/28/93 (Date)
PM Approval	Robert Vocke (Print Name)	Robert Vocke (Signature)	5-6-93 (Date)
QPPL Approval	Ted Norris (Print Name)	A.E. Norris (Signature)	~~April~~ May 6, 1993 (Date)

Effective Date: May 19, 1993

UNCONTROLLED

Core Barrel Sampling for Subsurface Earth Materials

Table of Contents

1.0 PURPOSE 2

2.0 SCOPE 2
- 2.1 Applicability 2
- 2.2 Training 2

3.0 DEFINITIONS 2

4.0 BACKGROUND AND/OR CAUTIONS 2

5.0 EQUIPMENT 3

6.0 PROCEDURE 3

7.0 REFERENCES 5

8.0 RECORDS 5

9.0 ATTACHMENTS 5

UNCONTROLLED

Core Barrel Sampling for Subsurface Earth Materials

1.0 PURPOSE

The following procedure outlines the steps to be followed when extracting subsurface earth material samples using the method of core barrel sampling.

Decontamination of the core barrel parts and associated apparatus is not included as part of this standard operating procedure (SOP).

2.0 SCOPE

2.1 Applicability

This procedure should be followed by all personnel responsible for obtaining subsurface solid samples by using a drill rig and core barrels. Refer to LANL-ER-SOP-04.01, Drilling Methods and Drill Site Management, for further information on drilling at environmental restoration (ER) sites.

2.2 Training

The field team leader and field team members shall be familiar with the objectives of sampling with a core barrel and must document that they have read and do understand this procedure.

UNCONTROLLED

3.0 DEFINITIONS

Not applicable

4.0 BACKGROUND AND/OR CAUTIONS

When sampling soil or underlying sediments or other solid material, it is important to collect the required solid sample in a manner that least disturbs the material one is trying to extract. That is, one attempts to bring the subsurface sample to the surface in a way that the physical and chemical integrity of the sample is not compromised. In this manner, the sampler can determine, for instance, the relative density of the material, observe whether there is an obvious interface between horizons, or ascertain the actual color and other physical characteristics of the subsurface solids after they have been brought to the surface.

This SOP is not meant to be all encompassing in terms of including all the details of sampling with a core barrel for every type of constituent. Specialized sampling may require modifying these procedures and these modifications are outside of the purview of this operating procedure. This procedure will cover sampling of subsurface sediments for radionuclides (including tritium), metals, polychlorinated biphenyls, total petroleum hydrocarbons, and volatile and semivolatile organic compounds. Sampling

for other constituents may be included under this SOP (or modifications thereof) at the discretion of the field team leader and operable unit project leader (OUPL).

5.0 EQUIPMENT

Core barrels are generally 5 feet in length and made of mild alloy steel. They consist of a machined heavy-duty hollow steel tube split vertically into two equal sections. The ends of the two sections are threaded in a way that they are held together by screw fittings attached at each end. The core barrel is locked into place with the lead cutting auger by attachment to the drill rod or alternately through a wireline latch system. In the drill rod method one end of the core barrel is connected to the drill rig's drive mechanism through a hexagonal slide couple while the other end is fitted with a beveled hollow cutting edge that is screwed onto the core barrel. The inside diameter of the core barrel is typically 2.5 inches. Core barrels are machined to fit inside hollow stem augers and advance at the same rate as the auger flights. As the drill bit is advanced, the shoe of the core barrel (a piece of beveled steel) slightly precedes the advancing drill bit. A bearing in the drive head prevents the core barrel assembly from rotating with the outer hollow stem auger. In this fashion, undisturbed subsurface sediments are pushed up into the hollow core barrel and are not pulverized by the drill bit. Modifications of a core barrel include addition of stainless steel, brass or Teflon sleeves or plastic inserts that facilitate segregation of the solid material brought up from the bore hole according to depth and minimize loss of constituents such as volatile organic compounds.

Drilling with core barrel samplers may be restricted by the material to be drilled through. Since the cutting part of the core barrel precedes the drill bit, and has a less rugged construction than the drill bit, it may be impossible to use the core barrel method of sampling when drilling into harder rock material, cobbles or the like.

UNCONTROLLED

6.0 PROCEDURE

Before going in the field, the core barrels are disassembled and decontaminated. A standard decontamination procedure would be to scrub the core barrel with liquinox (liquid soap) solution followed by rinsing with distilled water. Steam cleaning can also be utilized in decontaminating core barrels. This latter service is provided by EM-7 at TA-50.

Care should be taken to prevent contamination of the core barrels during storage or transportation. After decontamination, the core barrels are enclosed in disposable polyethylene bags.

When ready to use, the two pieces of the core barrel are forced together by screwing on the two fittings at the top and the bottom of the core barrel.

The core barrel is attached to either a drill rod or wireline system and lowered through the hollow stem to the bottom of the hole. When finally deployed, the beveled or cutting edge of the core barrel protrudes just past the drill bit.

The auger is connected to the drill drive head, and drilling commences over the length of the auger flight.

Groups HS-1 and HS-5 support personnel use portable field instruments to monitor the cuttings around the drill stem for radioactivity and volatile organic compounds. They will signal whether it is safe to remove the core barrel from the drill rig.

The core barrel is subsequently pulled out of the auger and out of the hole.

The core barrel is carried to the sample preparation area. By using clamps mounted on a table or other acceptable mechanism, the screw fittings at the ends of the core barrel are taken off and the core barrel split open.

Groups HS-1 and HS-5 personnel will take readings at each end of the core barrel to ascertain the safety of removing the material contained in the core barrel.

The core extracted from the borehole is then revealed.

The sections of core can be handled in a variety of ways, depending on the specific application or analysis to be performed with the solid sediments. One format is to segregate the five foot core length into 10 individual 6 inch sections.

Ordinarily, the segment to be submitted for analysis (or several segments, if a composite sample is to be analyzed) is placed in a stainless steel bowl and homogenized.

Aliquots of the homogenized sample are then placed in the relevant sample container.

A modification of the above procedure occurs when stainless steel, brass, Teflon or lexan sleeves are inserted into the core barrel. The sleeves can be cut to length and typically have an outside diameter of 2.5 inches. The decontaminated and labeled sleeves are loaded into the core barrel prior to the core barrel being connected to the rig and the auger flight. Polyethylene gloves will be worn by all personnel handling sleeves.

Instead of the core barrel itself being filled with earth materials, the sleeve inserts are filled.

When the core barrels are opened after an auger flight advancement of 5 feet, the sleeves are revealed.

The sleeves (if solid sleeves are used) are removed from the core barrel and fitted at each end with a plastic cap. If volatile organic compounds are an analyte of interest, a Teflon disc followed by a sheet of Teflon tape is placed over the end of the sleeve before the cap is attached.

UNCONTROLLED

Sleeves for volatile organic compounds are placed in a 12- x 12-inch zip lock bag and immediately cooled over ice.

If the soil sample is to be used for the analysis of semivolatile organic compounds, it would also be stored in an ice chest.

7.0 REFERENCES

Procedures directly associated with this procedure that should be included prior to drilling are the following:

LANL-ER-SOP-01.01, General Instructions for Field Personnel
LANL-ER-SOP-01.02, Sample Containers and Preservation
LANL-ER-SOP-01.04, Sample Control and Field Documentation
LANL-ER-SOP-01.05, Field Quality Control Samples
LANL-ER-SOP-04.01, Drilling Methods and Drill Site Management

EPA-600/4-83-020. Preparation of Soil Sampling Protocol: Techniques and Strategies
LANL-ER-AP-02.1, Procedure for LANL ER Records Management

Environmental Protection Group, EM-8: Standard Operation Procedure-Operation of Drill Unit Models CME 45 and 55 (if these drill rigs are being used)

UNCONTROLLED

8.0 RECORDS

Records are generated indirectly as a result of implementation of SOPs directly associated with this Procedure. These SOPs are listed in the references section.

These records will be transferred to the ER Records Processing Facility in accordance with the Procedure for LANL ER Records Management (LANL-ER-AP-02.1).

9.0 ATTACHMENTS

None

Los Alamos National Laboratory **Environmental Restoration Project** **Standard Operating Procedure**	No: LANL-ER-SOP-6.27 Rev: 0

SUBSURFACE VAPOR SAMPLING USING SOIL GAS PROBES AND SINGLE DOWNHOLE PACKERS

UNCONTROLLED

Prepared by	Dennis Newell (Print Name)	Dennis Newell (Signature)	8/9/95 (Date)
Quality Review by	PATRICIA M TILLERY (Print Name)	Patricia M Tillery (Signature)	8/11/95 (Date)
Technical Review by	THOMAS R. FOGG (Print Name)	[illegible] (Signature)	8/15/95 (Date)
PM Approval	Jorg Jansen (Print Name)	[illegible] (Signature)	9-19-95 (Date)
QPPL Approval	L.A. Souza (Print Name)	[illegible] (Signature)	9/19/95 (Date)

Effective Date: 9/27/95

SUBSURFACE VAPOR SAMPLING USING SOIL GAS PROBES AND SINGLE DOWNHOLE PACKERS

Contents

1.0 PURPOSE 2

2.0 SCOPE 2
- 2.1 Applicability 2
- 2.2 Training 2

3.0 DEFINITIONS 2

4.0 BACKGROUND AND CAUTIONS 4
- 4.1 Background 4
- 4.2 Cautions 5

5.0 EQUIPMENT 6

6.0 PROCEDURE 6
- 6.1 Soil Gas Probe Preparation and Installation/Use 6
- 6.2 Downhole Packer Installation and Use 8
  - 6.2.1 Installation 8
  - 6.2.2 Use 8
- 6.3 Sample Collection 9
  - 6.3.1 Tedlar Bag and Lung Box 9
  - 6.3.2 Sorbent Tube 10
  - 6.3.3 SUMMA® Canister 11
  - 6.3.4 Sample Vial 11
- 6.4 Equipment Decontamination 12
  - 6.4.1 Soil Gas Probe 12
  - 6.4.2 Downhole Packer 13
  - 6.4.3 eflon Tubing 14
- 6.5 Quality Assurance/Quality Control Sampling 14

7.0 REFERENCES 15

8.0 RECORDS 15

9.0 ATTACHMENT 15

UNCONTROLLED

SUBSURFACE VAPOR SAMPLING USING SOIL GAS PROBES AND SINGLE DOWNHOLE PACKERS

1.0 PURPOSE

The purpose of this standard operating procedure (SOP) is to provide instructions for the collection of subsurface gas/vapor samples using soil gas probes and single downhole packers.

2.0 SCOPE

2.1 Applicability

This procedure is applicable for the collection of subsurface gas/vapor samples using soil gas probes and single downhole packers for the Los Alamos National Laboratory (Laboratory) Environmental Restoration (ER) Project. These methods are used at sites with volatile and semi volatile hazardous and radioactive contaminants.

2.2 Training

Field team members, including the Field Team Manager, Field Team Leader, Site Safety Officer, and sampler(s) performing subsurface gas/vapor sampling must document that they have read and understand this SOP and all procedures in Section 1.0 (General Instructions) of the Laboratory's ER SOPs.

UNCONTROLLED

3.0 DEFINITIONS

A. Soil Gas Probe: A device driven into the subsurface for the purpose of extracting subsurface gas/vapor for chemical analysis. The probe consists of sections of pipe equipped with a driving point, a sampling screen, and a Teflon sampling tube. The driving point is located at the base of the probe; the sampling screen is located between the driving point and probe pipe; and the sampling tube leads from the screen, up the inside of the pipe to the surface for the collection of gas/vapor from the subsurface. The tube is connected to the sampling screen which is sealed off from the upper sections of pipe.

B. Downhole Packer: An inflatable bladder that is placed in the annulus of the auger flights in a borehole or in an open section of a borehole to seal off a specific interval of the borehole for the purpose of sampling the pore gas/vapor in that interval. A compressed gas, such as nitrogen or zero air, is used to inflate the packer. The packer is equipped with a Teflon sampling tube leading from below the packer within the sampling interval to the ground surface for the collection of subsurface gas/vapor.

C. Zero Air: Compressed dry air containing less than 1 ppm total hydrocarbons.

D. SUMMA® Canister: An evacuated stainless steel sampling device with a passivated inner surface that resists both surface adsorption and chemical reaction. Evacuated canisters are used to draw in the gas/vapor sample and retain it for remote laboratory analysis.

E. Tedlar Bag: A dedicated gas/vapor sampling bag made of Tedlar film, a chemically inert fluorocarbon polymer with characteristically low permeability. The bag is received from the supplier in an evacuated and sealed condition.

F. Lung Box: A sealed rigid box used for collecting a gas/vapor sample in a Tedlar sample bag. An evacuated sample bag is placed into the lung box; then the air in the box is evacuated using a pump. A sample is collected in the bag by slowly opening the valve on the sample bag.

G. Sorbent Tube: A glass, metal, or plastic tube containing solid material specifically designed to adsorb analytes of interest. When gas/vapor is pulled through the tube, airborne chemicals are trapped by the adsorbent material. In some cases, tubes are equipped with a second layer of adsorbent material that serves as a backup layer and also indicator of sample breakthrough.

H. Sample Vial: An evacuated glass container with a butyl rubber septum, which allows sample collection using a needle. The sample is sealed off automatically by the rubber septum when the vial is removed from the needle.

I. Equipment Blank: A sample of zero or ambient air collected through a decontaminated soil gas probe or downhole packer. Equipment blanks are collected as a check on the adequacy of decontamination procedures.

J. Ambient Air Blank: A sample of ambient air taken, possibly in tandem with the equipment blank, to monitor for the presence of compounds found in the ambient air at the field site. The ambient air blank is equivalent to a field blank.

K. Pore Gas/Vapor: Gaseous or vapor phrase compounds contained within the interstitial spaces of soil. Gas refers to a compound that is normally in the gaseous state at room temperature, while vapor refers to compounds that are normally liquids at room temperature but possess significant vapor pressures.

L. Volatile Compounds: Compounds having vapor pressures at 25°C greater than 10^{-1} mm Hg (EPA, 1988).

M. Semi volatile Compounds: Compounds having vapor pressures at 25°C between 10^{-1} and 10^{-7} mm Hg (EPA, 1988).

N. Holding Time: Time between sampling and analysis that should not be exceeded in order to prevent sample deterioration.

O. Lag Time: Time between sample collection and analysis determined by availability and proximity of analytical equipment. Lag time differs from holding

UNCONTROLLED

time in that holding times are controlled by the analytes and lag times are controlled by the availability and proximity of analytical equipment.

4.0 BACKGROUND AND CAUTIONS

4.1 Background

The use of soil gas probes and downhole packers to collect subsurface pore gas/vapor samples is applicable to sites with volatile, semivolatile, hazardous, and radioactive contamination. The method of subsurface vapor sampling used depends on the site characteristics and the scope of the sampling plan.

- Soil gas probes are good for shallow (< 15 ft below ground surface) in soil, sediment, and soft rock.

- Downhole packers are appropriate for use in boreholes and thus are good for sampling greater depths in a wider variety and hardness of materials. However, use of a downhole packer does require the advancement of a borehole with a drill rig.

  For the purpose of this SOP, downhole packers are used during the advancement of a borehole using a hollow-stem auger rig. The theory behind the technique is that the cuttings along the auger flights create a seal, and therefore a representative sample can be collected from the base of the borehole. With the augers in place, a packer is placed at a known depth near the base of a borehole, where it is inflated to seal off a small sampling interval below the inflated packer. The packer is equipped with two sets of tubing which run from the packer to the surface. One set of tubing is used to inflate the packer with an inert gas such as zero air or nitrogen. The other tubing is Teflon and is used for the sample collection; it runs from the sampling interval below the inflated packer to the surface.

  The type of container used depends on the target analytes and lag time before analysis. The allowable holding times for the target analytes should be determined before sampling begins so that appropriate arrangements can be made with laboratories and shippers.

- SUMMA canisters are appropriate for collecting volatile and semivolatile compounds (See EPA, 1988 for a complete list) that are going to be shipped to a laboratory for analysis. Each canister is equipped with a pressure gauge and a tag that are used to monitor for canister volume loss. Samples are not valid if a loss of > 2 psi (7%) is determined. If the concentrations of gas in a canister are high or the potential for radioactive gases/vapors exists, there may be shipping and/or laboratory restrictions. The allowable holding times for target analytes should be determined prior to sampling so that arrangements can be made with the laboratory.

UNCONTROLLED

- Tedlar bags and sample vials are appropriate for collecting volatile and semivolatile gas/vapor samples that will not be subjected to a significant lag time before analysis. The use of Tedlar bags or sample vials is appropriate when field analysis equipment or a nearby laboratory are available. Sample vials are particularly useful for sampling in conjunction with soil-vapor extraction pilot tests.

  The holding times for these containers may vary, depending on the analyte of interest, and should be determined in coordination with the analytical laboratory prior to sample collection. However, the samples are subject to loss over time, so analysis should be completed within 8 hours after collection.

- Sorbent tubes are useful when the specific analytes of interest are known. The type of sorbent material used is controlled by the specific analytes of interest:

  - Volatile, nonpolar organics (e.g., aromatic hydrocarbons, chlorinated hydrocarbons) having boiling points in the range of 80°C to 200°C can be collected in Tenax™ resin tubes.
  - Aliphatic amines and tritium should be collected using silica gel tubes.
  - Aldehydes and ketones should be collected with XAD-2 tubes.

  Holding time depend on target analytic and should be determined in coordination with the analytical laboratory prior to sampling. Sorbent tubes should be kept in iced coolers while awaiting analysis in accordance with manufacturer instructions.

UNCONTROLLED

4.2 Cautions

A. Keep all sample containers out of direct sunlight and at ambient temperatures (unless otherwise stated) before and after sample collection.

B. Make sure all fittings are tight, for they will tend to loosen during the driving process. Wrap all fitting threads with nonadhesive Teflon tape.

C. Make shipping and laboratory personnel aware of all container-specific holding time restrictions as well as holding time requirements. The site-specific sampling and analysis plan should identify and coordinate all these issues.

D. Use direct-reading instruments (with soil gas probes and downhole packers to assess contaminant concentrations on a real-time basis. The use of direct-reading instruments is essential for field health and safety monitoring of hazardous and radioactive constituents. The analytical laboratory will use the direct reading instrument data to ensure their own health and safety and to assist in selecting an appropriate calibration range for their instruments.

E. If a generator is used to power a driver, place the generator exhaust downwind of the probe in order to not contaminate the samples.

5.0 EQUIPMENT

Equipment and materials necessary for performing subsurface gas/vapor sampling using soil gas probes and downhole packers include, but are not limited to, the following:

- Soil gas probe [Art's Manufacturing Supply (AMS) Soil Gas Probe Kit # 209.86 or equivalent]
- Soil gas probe driver (manual or power)
- Generator to run power driver (if used)
- Mechanical high-lift jack for removing soil gas probe (comes with AMS Probe Kit)
- Downhole packer system, including rubber bladder with Teflon sampling tubing, inflation tubing, sampling port, safety cable, and reel for tubing/cable (Science and Engineering Associates packer system or equivalent)
- Sample containers
  - SUMMA® canisters with valves and pressure gauge
  - Tedlar bags with valves and lung box
  - Sorbent tubes with appropriate compression fittings
  - Sample vials (125 mL Pyrex glass serum vials with butyl rubber septa), disposable syringes (60 mL), and 20-22 gauge needles
- Three-way, luer-tipped valves
- Compressed dry nitrogen (Ultra-high purity grade) or zero air supply
- Vacuum pump and rotameter, or calibrated sampling pump
- Hand pump for evacuating lung box
- Sample coolers (with ice if required)
- PID, FID, or appropriate monitoring instrument
- Decontamination equipment, solutions, and chemicals
- Field documentation and support equipment.

UNCONTROLLED

6.0 PROCEDURE

6.1 Soil Gas Probe Preparation and Installation/Use

6.1.1 Preparation

A. Prepare a decontaminated probe by first attaching the Teflon sampling tubing to the screen near the driving point of the first probe section. Make sure enough tubing has been attached to reach the deepest desired sampling depth. Thread the sample tubing through the probe and attach a blunt driving head to the top of the first probe section; the sample tubing should extend out a slot in the driving head to protect it during installation.

B. Place a decontaminated, removable (or disposable) stainless steel (or appropriate material) drive point on the end of the first section of probe.

6.1.2 Installation and Operation

A. Drive the probe to the desired depth with a manual or power pipe driver, adding sections as necessary. Sections of probe are added by removing the driving head, threading the sample tubing through a new section, attaching the driving head to the new section as in Section 6.1.1, Step A. While driving in the probe, take care not to enlarge the hole unnecessarily by lateral probe movement.

B. When the screen is at the appropriate sample depth, attach a high-lift jack to the probe and lift up the probe out of the access hole about 1/2 in. to separate the driving tip from the probe. Doing this exposes the screen and provides a pathway for subsurface pore gas/vapor to enter the sample tubing.

C. Remove the blunt driver tip from the probe and attach a luer-tipped, three-way valve and connectors to the Teflon tubing. Seal the top of the annular space between the probe and the surface soil/formation with an appropriate impermeable material (e.g., bentonite, soil, molding clay, etc).

D. Connect an appropriate monitoring instrument to one port on the three-way valve. On the remaining valve port, connect the vacuum pump and rotameter or calibrated sampling pump. Open the three-way valve to the pump and purge a minimum of one sample tube volume, not exceeding the volume at which concentrations of the subsurface gas/vapor begin to drop off.

NOTE: During the purging process, it is necessary to monitor the breathing zone to ensure that personnel are not exposed to subsurface gas/vapor.

E. Monitor the concentration of the subsurface gas/vapor at set (e.g., 1-min) intervals by switching the three-way valve from the pump connection to the monitoring instrument.

F. Record in a field book all installation and purging details, including tube volume, pumping rate, start and finish time of purging, volume purged, and gas/vapor concentrations in the subsurface obtained from the monitoring equipment.

G. When purging is complete, seal off the three-way valve to the subsurface awaiting sample collection. If the valve does not have an OFF position, then switch the valve to the monitoring instrument.

UNCONTROLLED

H. Remove the vacuum pump with rotameter or calibrated sampling pump from the three-way valve port in preparation for sample collection. The monitoring instrument should remain attached. If the probe is going to be advanced to greater depths for additional samples refer back to A.

I. If the probe will be advanced for further sample collection, refer back to step A above. Otherwise, remove the probe one section at a time using the jack. Remove the probe carefully; the probe tip and screen can be easily damaged.

6.2 Downhole Packer Installation and Use

6.2.1 Installation

A. Using a hollow-stem auger, advance the auger string and sample barrel to the desired sampling depth.

B. Remove the sample barrel from the auger string. The driller should take care not to clean the hole prior to gas sampling to ensure that the auger flights are filled with cuttings, effectively sealing off the bottom of the hole.

C. Insert the packer into the auger string and seat it against the sample barrel landing ring (located inside the auger bit).

D. Inflate the packer with compressed zero air or nitrogen, taking care not to over inflate and burst the packer.

E. Attach a three-way, luer-tipped valve to the surface end of the Teflon sample tubing.

F. Connect an appropriate monitoring instrument to one port on the three-way valve. On the remaining port, connect the vacuum pump and rotameter or calibrated sampling pump.

6.2.2 Use

A. Open the three-way valve to the pump and purge subsurface gas/vapor. The gas/vapor purged should equal, at a minimum, one sample tube in volume not exceeding the volume at which concentrations of the subsurface gas/vapor begin to drop off.

NOTE: During the purging process, it is necessary to monitor the breathing zone to ensure that personnel are not exposed to subsurface gas/vapor.

UNCONTROLLED

B. Monitor the concentration of the subsurface gas/vapor at set (e.g., 1-min) intervals by switching the three-way valve from the pump connection to the monitoring instrument.

C. Record in a field logbook all installation and purging details, including tube volume, pumping rate, start and finish time of purging, volume purged, and gas/vapor concentrations in the subsurface obtained from the monitoring equipment.

D. When purging is complete, seal off the three-way valve to the subsurface. Detach the vacuum pump with rotameter or calibrated sampling pump from the valve in preparation for sample collection (Section 6.3). The monitoring instrument should remain attached to the three-way valve.

E. If the borehole will be advanced for further sampling, refer to the process outlined above. Otherwise, deflate the packer and remove it from the borehole.

F. After removal and before reuse, decontaminate the exterior of the packer (Section 6.4).

6.3 Sample Collection

The following procedures for sample collection in Tedlar bags, SUMMA® canisters, sorbent tubes, and sample vials apply to both the soil gas probe and downhole packer sampling techniques.

6.3.1 Tedlar Bag and Lung Box

A. While preparing to sample, prepare to take readings from the monitoring instrument attached to the three-way valve during preset time intervals until the sample is collected.

B. Insert an evacuated Tedlar bag into the lung box and close and seal the lung box.

C. Attach the Tedlar bag in the lung box to the available port on the three-way valve.

D. Evacuate the lung box using a hand pump (or equivalent).

E. Switch the three-way valve to the port attached to the Tedlar bag. Slowly open the valve on the sample bag; the vacuum in the lung box will fill the Tedlar bag with subsurface gas/vapor. Do not overfill the Tedlar bag, for it may burst; a window on the lung box allows for visual observation of the Tedlar bag.

UNCONTROLLED

F. After the sample is collected, shut the valve on the Tedlar bag, and switch the three-way valve so that the subsurface is sealed from the atmosphere. Remove the Tedlar bag from the lung box and transfer it to a sample cooler (kept at ambient temperatures) to wait analysis.

G. Record in a field logbook all details of the sampling, including
- sampling date,
- time,
- ambient air temperature, and
- subsurface vapor/gas concentrations from the monitoring equipment.

6.3.2 Sorbent Tube

A. While preparing to sample, prepare to take readings from the monitoring instrument attached to the three-way valve at preset time intervals until the sample is collected.

B. Place the sorbent tube specific to the analyte(s) of interest in line between a vacuum pump with rotameter or calibrated sampling pump and the three-way valve. Attach the sorbent tube to the pump and three-way valve using the appropriate compression fittings make sure fittings are tight to avoid leakage, which should be stainless steel or Teflon.

C. Open the three-way valve to the port attached to the sorbent tube and pump. Turn on the pump and allow subsurface pore gas/vapor to run through the sorbent tube until the required volume has passed through the tube. The required sample volume is determined by the detection limit of the analytical method and should be outlined in the site-specific sampling and analysis plan.

D. After sample collection, turn off the pump, switch the three-way valve so that the subsurface is sealed off from the atmosphere. Remove the sorbent tube, cap the ends of the fittings, and transfer to a sample cooler to await analysis.

E. Record in a field logbook all details of the sampling including,
- sampling date,
- time,
- sample volume extracted (calculated from rotameter and sampling time),
- ambient air temperature, and
- subsurface gas/vapor concentrations from the monitoring equipment.

UNCONTROLLED

6.3.3 SUMMA® Canister

A. While preparing to sample, prepare to take readings from the monitoring instrument attached to the three-way valve at preset time intervals until the sample is collected.

B. Prepare the SUMMA® canister following instructions in LANL-ER-SOP-06.22, Canister Sampling for Organics, EPA Method T0-14.

C. Detach the purging pump and attach a SUMMA® canister to the available port on the three-way valve. Record in a field book the starting vacuum in the canister from the canister pressure gauge.

D. Open the three-way valve to the port attached to the SUMMA® canister. Slowly open the valve on the canister itself and allow the vacuum in the canister to draw in subsurface gas/vapor. Sample collection is complete when the pressure in the canister equilibrates with the subsurface conditions (i.e., when the canister pressure gauge reading stabilizes).

E. After sample collection is complete, close the valve on the canister and switch the three-way valve so that the subsurface is sealed off from the atmosphere. Record in a field book the ending canister pressure from the canister pressure gauge. The canister can now be prepared for shipping to the laboratory for analysis.

F. Record in a field logbook all details of the sampling, including
- sampling date,
- time,
- ambient air temperature,
- starting and ending canister pressures, and
- subsurface gas/vapor concentrations from monitoring equipment.

G. The starting and ending canisters pressures should be recorded on the chain-of-custody form that accompanies the canister to the laboratory.

6.3.4 Sample Vial

A. While preparing to sample, prepare to take readings from the monitoring instrument at preset time intervals until the sample is collected.

B. Attach an additional luer-tipped, three-way valve to the available port on the original three-way valve [valve (a) on Attachment A] [valve (b) on Attachment A].

UNCONTROLLED

C. Connect a disposable syringe to one port on valve (b).

D. Connect a clean, stainless steel, 20-22 gauge needle to the remaining port on valve (b).

E. Attach an evacuated sampling vial to valve (b) by pushing the vial onto the needle attached in step D; valve (b) should be closed off to valve (a). Switch valve (a) from the monitoring instrument to valve (b) [Attachment A, position 1].

F. Open valve (b) to the sampling vial to allow subsurface gas/vapor to enter [Attachment A, position 2].

G. Open valve (b) to the syringe and draw in 60 mL of gas/vapor into the syringe. [Attachment A, position 3].

H. Switch valve (b) so that the sample vial is open to the syringe port. Pressurize the sample vial with 20 mL of gas/vapor from the syringe. [Attachment A, position 4]. Remove the sample vial and place into a cooler (at ambient conditions) to await analysis.

I. Switch the three-way valve (a) so that the subsurface is sealed off from the atmosphere at the conclusion of sampling.

J. Record in a field logbook all details of the sampling, including
- sampling date,
- time,
- ambient air temperature, and
- subsurface gas/vapor concentrations from the monitoring equipment.

UNCONTROLLED

6.4 Equipment Decontamination

6.4.1 Soil Gas Probe

This process applies to all reusable parts of the soil gas probe and must be performed between sampling locations.

A. Screen the equipment for radioactive contamination. If radioactivity is detected, implement the dry decontamination outlined in LANL-ER-SOP-01.08, Field Decontamination of Drilling and Sampling Equipment.

B. Once the equipment is determined to be free of any radioactive contamination, use the following chemical decontamination process:

1. Wash the equipment with a Liquinox® or Alconox® and water solution. A 5-ft-long barrel cleaning brush is helpful for cleaning the inside the probe pipe.

2. Rinse the equipment using potable water and air dry.

3. Provide a final rinse with deionized water and allow to air dry before resuse.

C. Segregate, contain, and dispose of all solutions produced during the decontamination process using approved waste management procedures. Following the collection of each sample, dispose of any disposable sampling equipment (e.g., syringes, needles, fittings, etc.) according to correct waste management procedures.

D. The method for decontaminating the Teflon tubing is found in Section 6.4.3 below.

6.4.2 Downhole Packer

The downhole packer is removed from the borehole between sampling intervals in the same sample locations. Before reuse, the outside of the packer and all tubing that runs down the auger string should be decontaminated in the following manner to prevent any cross-contamination.

A. Screen the equipment for radioactive contamination. If radioactivity is detected, implement the dry decontamination outlined in LANL-ER-SOP-01.08.

B. Once the equipment is determined to be free of any radioactive contamination, use the following chemical decontamination process:

1. Wash the outside of the equipment with a Liquinox® or Alconox® and water solution.

2. Rinse the equipment using deionized water.

3. Allow the equipment to air dry.

C. While decontaminating the outside of the equipment, take care not to allow any decontamination solution or water to enter the Teflon sample tubing.

D. Segregate, contain, and dispose of all solutions produced during the decontamination process using approved waste management procedures.

UNCONTROLLED

E. The method for decontaminating the Teflon tubing is found in Section 6.4.3 below.

6.4.3 Teflon Tubing

All used Teflon sample tubing should be decontaminated in the following manner:

A. After removal from the sample location, run nitrogen or zero air (or ambient air if the relative humidity is low) through the tubing to evacuate any residual subsurface gas/vapor. Because Teflon is a nonabsorbent material, liquid decontamination of the interior surface before reuse is not necessary.

B. Use a PID, FID, or appropriate monitoring instrument to ensure that the tubing is contaminant-free. If possible, also remove any visible material on the outside of the tubing. Dispose of and replace any tubing that is visibly damaged or contaminated or that equipment blanks show to be contaminated.

C. The fittings associated with the tubing should be stainless steel or Teflon. If the fittings are Teflon, treat them in the same manner as the tubing; if they are stainless steel, decontaminate them in the same method they can be decontaminated using the four-step process in Section 6.4.1. If the fittings become damaged, dispose of them and replace them with equivalent parts.

UNCONTROLLED

6.5 Quality Assurance/Quality Control Sampling

The following types of field quality assurance/quality control (QA/QC) samples are required. Establish analytical standards with the participating laboratory prior to sampling to ensure accuracy.

Duplicate Samples: Duplicate samples are used to check the precision of the analysis. They should be taken in the same manner as the regular samples, with a frequency of one duplicate per 20 samples or, at least, one duplicate per field sampling event.

Equipment Blank: An equipment blank, consisting of an appropriate sample container filled with zero air from a decontaminated soil gas probe or downhole packer before its use or reuse, should be collected at a frequency of one per day to check the decontamination process.

Ambient Air Blank: An ambient air blank, consisting of an appropriate sample container filled with ambient surface air, should be collected in tandem with the equipment blank at a frequency of one per day. These samples, equivalent to a

field blank, assess the ambient surface air conditions and their potential interference's.

Trip Blank: A trip blank, consisting of an appropriate sample container filled directly with zero air, should be collected at a frequency of one per day. It should be stored and transported under the same conditions and in the same container (e.g., a cooler) as the rest of the samples for that day. Trip blanks are used to assess any potential contaminants introduced during sample transport.

7.0 REFERENCES

LANL-ER-SOPs in Section 1.0, General Instructions.
LANL-ER-SOP-06.21, Volatile Organic Sampling Train.
LANL-ER-SOP-06.22, Canister Sampling for Organics - EPA Method TO-14.

EPA, May 1988. Compendium Method TO-14 "The Determination of Volatile Organic Compound in Ambient Air Using SUMMA® Passivated Canister Sampling and Gas Chromatograph Analysis".

Posner, Judd C., and Woodfin, W. James: Sampling with gas bags I: losses of analyte with time. *Appl. Ind. Hyg. (1)4* (November 1986).

8.0 RECORDS

The following records are generated during sampling under this procedure

- Chain of Custody/Request for Analysis Forms.
- Sample Collection Log Forms.
- Daily Activity Log in the form of a field book that contains details on all sampling and field activities, including any pertinent field data.

The field leader is responsible for transferring these to the ER Records Processing Facility.

9.0 ATTACHMENT

Attachment A — Three-Way Valve Positions For Sampling System

UNCONTROLLED

Los Alamos National Laboratory Environmental Restoration Project
THREE-WAY VALVE POSITIONS FOR SAMPLING SYSTEM

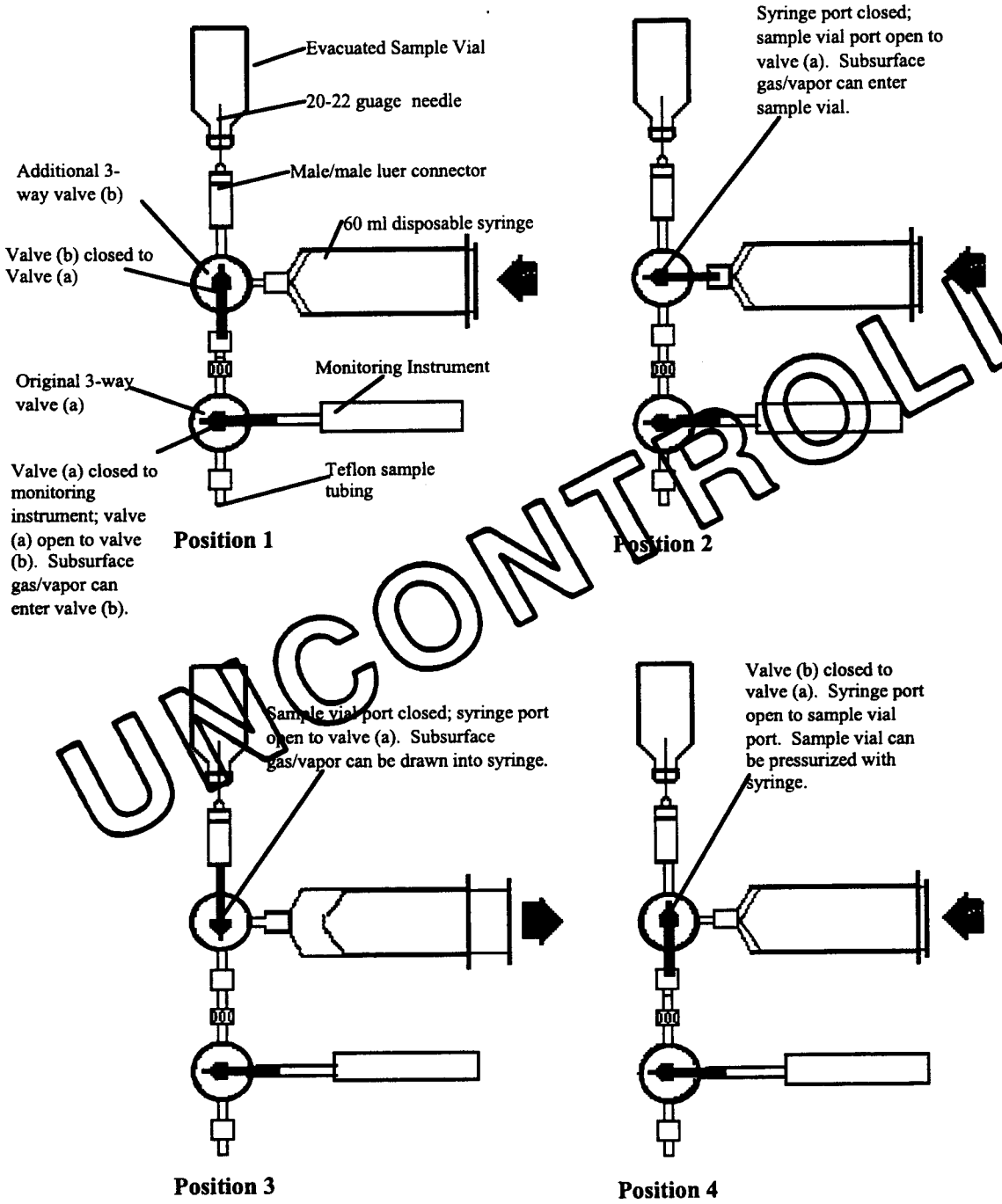

UNCONTROLLED

The three-way valve pictured is generic. Individual valves may operate differently, and operators of the equipment should be familiar with the proper positioning of the valve to direct the gas/vapor in the necessary directions.

Los Alamos National Laboratory **Environmental Restoration Program** Standard Operating Procedure	No: LANL-ER-SOP-6.28 Rev: 0

CHIP SAMPLING OF POROUS SURFACES

Prepared by	Dorothy Hoard (Print Name)	Dorothy Hoard (Signature)	8/18/94 (Date)
Quality Review by	Charlie Wilson (Print Name)	Charlie Wilson (Signature)	9/22/94 (Date)
Technical Review by	John Smith (Print Name)	(Signature)	7/25/94 (Date)
PM Approval	Jorg Jansen (Print Name)	(Signature)	9-14-94 (Date)
QPPL Approval	Larry Souza (Print Name)	(Signature)	9/5/94 (Date)

Effective Date: 9/20/94

UNCONTROLLED

CHIP SAMPLING OF POROUS SURFACES

Contents

1.0 PURPOSE 2

2.0 SCOPE 2
- 2.1 Applicability 2
- 2.2 Training 2

3.0 DEFINITIONS 2

4.0 BACKGROUND AND/OR CAUTIONS 2

5.0 EQUIPMENT 2

6.0 PROCEDURE 3

7.0 REFERENCES 4

8.0 RECORDS 4

9.0 ATTACHMENTS 4

UNCONTROLLED

CHIP SAMPLING OF POROUS SURFACES

1.0 PURPOSE

This procedure describes a methodology for collecting chip samples representative of porous surfaces, and the selection of equipment and materials to be used in the process.

2.0 SCOPE

2.1 Applicability

This procedure applies to personnel responsible for obtaining chip samples of porous surfaces for the Environmental Restoration (ER) Program. Porous surface sampling techniques are used for any porous object considered too large for collection as a discreet sample, or for cases where surficial contamination rather than contamination of the bulk material is of interest. Examples include intact structures such as a roadbed or wall, chunks of debris too large for transport, boulders or bedrock surfaces, and surfaces of functioning structures.

2.2 Training

The field team leader and the field team members shall be familiar with the objectives of chip sampling of porous surfaces and shall document that they have read and understood this procedure.

UNCONTROLLED

3.0 DEFINITIONS

Porous surface: In this context, a surface capable of allowing the passage of liquid through pores or small crevices. Examples of porous materials applicable to the ER Program include asphalt, concrete, wood, brick, unglazed clay pipe, and tuff.

4.0 BACKGROUND AND/OR CAUTIONS

The chipping process may create flying particles that could cause physical harm, particularly to the eyes.

5.0 EQUIPMENT

The equipment required to implement this procedure is listed in Attachment A.

6.0 PROCEDURE

A. Identify the types of analyses to be conducted on the samples. Coordinate the sampling effort with the Sample Coordination Facility (SCF). The SCF will give guidance regarding sample containers, preservation, and shipment to the SCF.

B. Gather and decontaminate the necessary supplies and equipment in accordance with LANL-ER-SOP 01.08, Field Decontamination of Drilling and Sampling Equipment.

C. Assemble the tools and supplies and put on personal protective equipment, including goggles and work gloves.

D. Perform any *in situ* screening required by applicable work plans or health and safety plans. Remove undesirable surface materials from the sampling location by brushing or wiping, as appropriate. Using a chisel, drill, hole saw, or similar tool, collect a minimum of 100 grams of sample to a depth of 2 centimeters, or to an alternate depth specified in applicable planning documents. The sampled surface area and sampling depth should be recorded in the field Sample Collection Log. Non-porous inclusions, such as stones, glass, or metal, imbedded in the porous material, should be removed from the sample. The collected chips may be of any convenient size unless otherwise specified in applicable planning documents.

E. Transfer the sample to an appropriate sample container. Consult the SCF and LANL-ER-SOP 01.02, Sample Containers and Preservation, Attachment D, for guidance regarding the amount (given in ml) of sample, the type of sample container, holding time, and preservation techniques to be used for each analysis to be conducted.

F. Complete Sample Collection Logs, Master Collection logs, and Chain of Custody Forms; label sample containers and complete documentation in accordance with LANL-ER-SOP 01.04, Sample Control and Field Documentation.

G. Clearly mark the sampled surfaces with paint or other indelible medium. The mark should include the site identification number. Document the site with photographs, if appropriate.

H. Decontaminate the equipment, if intended for immediate reuse, prior to collecting the next sample. Pack the samples for shipping to the SCF. Handle sampling wastes, excess sample materials, disposable items, and decontamination fluids following LANL-ER-AP-05.3, Management of Resource Conservation and Recovery Act facility investigations (RFI)-Generated Waste.

I. Upon completing sampling, pack equipment for cleaning and return equipment and supplies to their proper storage locations.

UNCONTROLLED

7.0 REFERENCES

LANL-ER-SOP-01.01, General Instructions for Field Investigations.
LANL-ER-SOP-01.02, Sample Containers and Preservation
LANL-ER-SOP-01.04, Sample Control and Field Documentation
LANL-ER-SOP-01.08, Field Decontamination of Drilling and Sampling Equipment.
LANL-ER-AP-05.3, Management of RFI-Generated Waste.

8.0 RECORDS

Completed Sample Collection Log
Completed Location Information Form
Completed Master Collection Log
Completed Chain of Custody/Request for Analysis Form
Completed Daily Activity Log, including any deviations or other pertinent information.

The person performing chip sampling is responsible for completing these logs and forms in accordance with LANL-ER-SOP-1.04, Sample Control and Field Documentation. The person performing chip sampling is also responsible for transferring the records generated under this procedures to the Environmental Records Processing Facility (RPF) in accordance with LANL-ER-AP-02.1, Procedure for LANL ER Records Management.

9.0 ATTACHMENTS

Attachment A - Equipment and Supplies Checklist for Chip Sampling of Porous Surfaces

UNCONTROLLED

EQUIPMENT AND SUPPLIES CHECKLIST FOR CHIP SAMPLING OF POROUS SURFACES

Protective equipment
___Safety glasses
___Sturdy work boots
___Work gloves

Sample preparation equipment
___Alconox
___Blue ice or equivalent
___Camera and film
___Chem wipes
___Cleaning wipes
___Disposable laboratory gloves
___Paint or other indelible medium to identify sample location
___Sample containers and preservatives
___Storage containers for decontamination solutions

Sample collection and decontamination equipment
___Brushes (galvanized, stainless steel, or plastic)
___Brushes (long handle, scrub, or wire)
___Drive hammer (3 to 10 lbs)
___Wash tub or plastic bucket
___Garden pressure or squeeze bottle sprayer
___Plastic sheet
___Stainless steel chisel
___Stainless steel drill
___Stainless steel hole saw
___Tape measure
___Trash bags

Paperwork
___Borehole log (soil) form
___Chain-of-Custody/Request-for-Analysis Form
___Custody seals
___Daily activity logs
___Sample collection log
___Sample labels
___Unique sample identification number stickers
_____

Note: Not all equipment is expected to be needed at every site.

UNCONTROLLED

SINGLE-STAGE SAMPLING FOR SURFACE WATER RUN-OFF

1.0 PURPOSE

This procedure details the methodology adopted to collect discrete samples of surface water run-off from hillsides or ephemeral watercourses. Analysis of water and sediments in surface water run-off yields information on contaminants of concern (COCs) that may be moving out of solid waste management units.

2.0 SCOPE

2.1 Applicability

This procedure is applicable to all designs of single-stage samplers (SSS) but is focused toward collection of run-off from small rivulets or other minor discharge points. Reference should also be made to LANL-ER-SOP-1.02, Sample Containers and Preservation, and LANL-ER-SOP-1.04, Sample Control and Field Documentation.

2.2 Training

Technicians constructing and installing SSS must be field trained on-site by personnel experienced in the construction and operation of SSS.

3.0 DEFINITIONS

There are no unique definitions in this procedure.

4.0 BACKGROUND AND PRECAUTIONS

Single-stage samplers were developed by the U.S. Geological Survey as a simple method to obtain suspended-sediment and surface water run-off samples automatically and without immediate attention. The samplers are designed to collect water when the water surface rises to a selected stage. There are no special precautions to be heeded in operating SSS.

5.0 EQUIPMENT

Equipment to be used in the construction of SSS include:

- glass or plastic bottles,
- tubing of different material dependent on constituents to be analyzed, and
- other parts as needed contingent on the design of SSS adopted by the user.

UNCONTROLLED

6.0 PROCEDURE

6.1 Design

Single-stage samplers are constructed to fit the user's need (USGS 1961). One design is depicted in Attachment A. This design consists of a 1 gallon plastic bottle fitted with a two-hole rubber stopper. The tubing is made of copper and is forced through the holes in the stopper so that one tube can serve as an air vent and the second tube can serve as the water inlet. A depiction of the design utilized should be included in the documentation that is forwarded to the Records Processing Facility.

6.2 Installation

Single-stage samplers are installed so that surface water will flow into the prepared bottle. Installation may involve digging a hole to place the bottle in, placing a bottle at the end of a weir or any other technique that will allow the bottle to fill with surface water run-off. In the design that utilizes emplacing the bottle in a hole, the area downstream from the bottle must be built or dammed up (staged) so that water collects or ponds around the inlet tube for the bottle. The bottle and inlet tube in this design must be located below the surface of any ponded water so that flow will be by gravity via the tube and into the bottle.

6.3 Collection

After a storm event, the bottles must be checked for water as soon as possible. If the bottles contain water, they should be immediately removed. The bottles should be immediately capped and placed in a cooler if desired constituents require preservation at low temperatures. As part of the records kept on sample collection, a notation should be made on the probable date of the storm event that led to the sample collection.

6.4 Sample Preparation

Sample preparation (filtration, acidification) will depend on the information desired by the user. The user should refer to LANL-ER-SOP-1.02, Sample Container and Preservation. At a minimum specific conductance and pH should be determined by the user as soon as possible.

7.0 REFERENCES

LANL-ER-SOP-01.02, Sample Containers and Preservation
LANL-ER-SOP-01.04, Sample Control and Field Documentation
LANL-ER-AP-02.1, Procedure for LANL ER Records Management

UNCONTROLLED

Los Alamos National Laboratory **Environmental Restoration Program** Standard Operating Procedure	No: LANL-ER-SOP-06.29	Rev: 0

SINGLE-STAGE SAMPLING FOR SURFACE WATER RUN-OFF

	(Print Name)	(Signature)	(Date)
Prepared by	RON CONRAD	Ron Conrad	8/24/93
Quality Review by	DAVE BRADBURY	[illegible]	9/1/93
Technical Review by	Bruce Gallaher	Bruce Gallaher	8/24/93
PM Approval	Robert W Vocke	Robert W Vocke	9-9-93
QPPL Approval	LAWRENCE A. SOUZA	L A Souza	9/9/93

Effective Date: 9/17/93

UNCONTROLLED

SINGLE-STAGE SAMPLING FOR SURFACE WATER RUN-OFF

Contents

1.0 PURPOSE 2

2.0 SCOPE 2
- 2.1 Applicability 2
- 2.2 Training 2

3.0 DEFINITIONS 2

4.0 BACKGROUND AND PRECAUTIONS 2

5.0 EQUIPMENT 2

6.0 PROCEDURE 3
- 6.1 Design 3
- 6.2 Installation 3
- 6.3 Collection 3
- 6.4 Sample Preparation 3

7.0 REFERENCES 3

8.0 RECORDS 4

9.0 ATTACHMENTS 4

UNCONTROLLED

LIBRARY COPY

Environmental Restoration Standard Operating Procedures

Volume II

A Department of Energy
environmental clean-up program

Uncontrolled Copy

Los Alamos

National Laboratory

Los Alamos National Laboratory
Environmental Restoration Program

STANDARD OPERATING PROCEDURES

CONTENTS - VOLUME II

General Instructions	Dated May 23, 1997
Procedure Numbers	**Title**
7.0	**SUBSURFACE HYDROGEOLOGICAL SITE CHARACTERIZATION**
LANL-ER-SOP-07.01,R0	Pressure Transducers
LANL-ER-SOP-07.02,R0	Fluid Level Measurements
LANL-ER-SOP-07.03,R0	Well Slug Tests
LANL-ER-SOP-07.04,R0	Aquifer Pumping Tests
9.0	**GEOCHEMISTRY**
LANL-ER-SOP-09.01,R0	Thin Section Preparation
LANL-ER-SOP-09.02,R0	Operating the Microprobe
LANL-ER-SOP-09.03,R0	Operation of the Siemens X-Ray Diffractometer
LANL-ER-SOP-09.04,R0	Calibration and Alignment of the Siemens Diffractometers
LANL-ER-SOP-09.05,R0	Clay Mineral Separation for X-Ray Diffraction Analysis
LANL-ER-SOP-09.06,R0	Zeolite Purification and Separation
LANL-ER-SOP-09.07,R0	Operating Instructions for ISI ModelDS-130 Scanning Electron Microscope and Tracor Northern Series II X-Ray Analyzer
LANL-ER-SOP-09.09.R0	Certification of Standards for Electron Microanalysis
10.0	**FIELD SCREENING TECHNIQUES**
LANL-ER-SOP-10.01,R0	Screening of PCB's in Soil
LANL-ER-SOP-10.04,R1	Fidler Instrument System
LANL-ER-SOP-10.05,R0	Interim Change Notice (ICN #003) Field Analysis of Total Hydrocarbons Using The Hanby Method
LANL-ER-SOP-10.06,R0	High Explosives Spot Test
LANL-ER-SOP-10.07,R1	RO-Field Monitoring for Surface and Volume Radioactivity levels
LANL-ER-SOP-10.08,R0	Interim Change Notice (ICN # 015) Operation of the Spectrace 90000 Field-Portable X-Ray Fluorescence Instrument
LANL-ER-SOP-10.10,R0	Radiation Scoping Surveys

Procedure Numbers	Title
11.0	**GEOTECHNICAL ANALYSIS**
LANL-ER-SOP-11.01,R0	Measurement of Bulk Density, Dry Density, Water Content and Porosity in Soil
LANL-ER-SOP-11.02,R0	Particle Size Distribution of Soil/Rock Samples
LANL-ER-SOP-11.03,R0	Permeability of Granular Soils
LANL-ER-SOP-11.04,R0	Soil and Core pH
LANL-ER-SOP-11.05,R0	Total Organic Carbon
LANL-ER-SOP-11.06,R0	Cation-Exchange Capacity
12.0	**CURATORIAL MANAGEMENT ACTIVITIES**
LANL-ER-SOP-12.01,R2	Field Logging, Handling and Documentation of Borehole Materials
LANL-ER-SOP-12.02,R2	Transportation, Receipt, and Admittance of Borehole Samples for the Sample Management Facility
LANL-ER-SOP-12.03,R0	Acceptance of Non-Borehole Samples by the Sample by the Sample Management Facility
LANL-ER-SOP-12.04,R1	Physical Processing and Storage of Borehole Samples at the Sample Management Facility
LANL-ER-SOP-12.05,R0	Examination of Samples at the Sample Management Facility
14.0	**GROSS MEASUREMENTS OF RADIOACTIVITY IN SOILS**
LANL-ER-SOP-14.01,R0	Berthold Low Alpha and Beta Activity Counter Calibration, Quality Control, Detection Limit, and Use

LANL - Environmental Restoration

Standard Operating Procedures
Master Distribution List

Manual No.	Recipient Name	Organization	Mail Stop
1	MEREWETHER, DAN	CST-14	J592
2	WILLIAMS, CLAUDIA	ERM GOLDER	M327
3	FARMER, TOM	EES-14	J493
4	MICHELOTTI, ROY	CST-18	E525
5	CONRAD, RON	ESH-19	K490
6	LOST, DAMAGE	DOCUMENT CONTROL	M707
7	HOARD, DOROTHY J.	CST-1	E525
8	ELLER, GARRY	CST-7	J534
9	GLATZMAIER, TRACY	DDEES	M992
10	GOULD, T. E. GENE	ESA-4	G787
11	ROFER, CHERYL	EES-1	D462
12	NOEL, JAMES	ER/P2C	J591
13	GILKESON, ROBERT	EM/ER/VIS	M327
4	LONGMIRE, PATRICK	CST-10	J534
15	MARTIN, WILLIAM BRAD	CST-18	E525
16	LOST, DAMAGE	DOCUMENT CONTROL	M707
17	PRATT, ALLYN	EES-13	J521
18	CREAMER, LARRY	DX-10	P950
19	LOST, DAMAGE	DOCUMENT CONTROL	M707
20	VANDENPLAS, BART	LATA	M321
21	SHANER, MARJA	EM/P&PI	M773
22	MIGLIO, JOHN J.	CST-9	K484
23	MAASSEN, LARRY	EM/ER/D&D	A145
24	RAY, JAMES MIKE	EM/ER/D&D	M707
25	GALLAHER, BRUCE	ESH-18	K497
26	KRUEGER, JOHN	WESTON	M992
27	LOST, DAMAGE	DOCUMENT CONTROL	M707
28	INACTIVE, FILE	DOCUMENT CONTROL	M707
29	FRESQUEZ, PHIL	ESH-20	M887
30	AUCHAMPAUGH, PHYLLIS	EES-1	D462
31	LOST, DAMAGE	DOCUMENT CONTROL	M707
32	NEWTON, CARL	EES-3	E525
33	ALLEN, GARRY R.	CST-18	E525
34	FICKLING, DEBORAH	ICF KAISER	M892
35	LOST, DAMAGE	DOCUMENT CONTROL	M707
36	MARUSAK, NANCY L.	EES-5	D452

LANL - Environmental Restoration

Standard Operating Procedures
Master Distribution List

Manual No.	Recipient Name	Organization	Mail Stop
37	WILTON, OLIVER C.	ESH-5	K494
38	ARMSTRONG, KATHLEEN	EM/ER/D&D	M992
39	CAMPBELL, KATHERINE	A-1	F665
40	WILSON, CHARLIE	ERM GOLDER	M327
41	TAYLOR, TED	DOE-LAAO	A316
42	DRISCOLL, BARBARA	EPA	
43	BAYHURST, GREG	EES-4	H865
44	BRADBURY, DAVE	EM/ER/D&D	M992
45	LOST, DAMAGE	DOCUMENT CONTROL	M707
46	BLEGEN, RON	ERM GOLDER	M327
47	INACTIVE, FILE	DOCUMENT CONTROL	M707
48	STAUB, BOB	MORRISON KNUDSEN	M892
49	FRANK, DAVE	ERM GOLDER	M327
50	TAYLOR, TED	DOE-LAAO	A316
51	OLGUIN, SALLY	ESH	J987
52	BOHN, ROY	EM/ER/D&D	M992
53	RUST, TERRY A.	ESH-14	E525
54	LOST, DAMAGE	DOCUMENT CONTROL	M707
55	KOCH, RICH J.	SAIC	J521
56	KRIER, DON J.	EES-1	D462
57	SOUZA, LARRY	EM/ER	M992
58	DYE, ALBERT	ESH-19	K490
59	PIPPIN, DOUGLAS	ESA-DE	G787
60	WILLIAMS, JOHN	ERM GOLDER	M327
61	CORDI, RICHARD	ESA-DE	G787
62	MARTINEZ, BENNIE	CST-7	J534
63	WALTER, KEVIN	BROWN AND ROOT ENVIRONMENTAL	
64	MAES, MAX	ESH-18	K497
65	KISIEL, KEN	ERM GOLDER	M327
66	GUSTIN, REBECCA	ERM GOLDER	M327
67	DEN-BAARS, P. SCOTT	ESH-8/VIS	K490
68	BRADLEY, JAYNE	ERM GOLDER	M327
69	FAULK, DEREK	ERM GOLDER	M327
70	REESE, LILY	ESH-14	C304
71	INACTIVE, FILE	DOCUMENT CONTROL	M707
72	WILLISON, CORINNE P.	ICF KAISER	M892

LANL - Environmental Restoration

Standard Operating Procedures
Master Distribution List

Manual No.	Recipient Name	Organization	Mail Stop
73	INACTIVE, FILE	DOCUMENT CONTROL	M707
74	KIDMAN, LYNN	ICF KAISER	M892
75	TILLERY, PATRICIA	ICF KAISER	M892
76	HARRIS, JENNIFER A.	ERM GOLDER	M327
77	CAPORUSCIO, FLORIE	ERM GOLDER	M327
78	CROWDER, ANDREW	EM/ER/VIS	M992
79	HODITSCHEK, BARBARA	NMED	
80	MICHAEL, DAN	NEPTUNE	M773
81	WALTERSCHEID, JEFFREY C.	ERM GOLDER	M327
82	KATZMAN, DANNY	ERM GOLDER	M327
83	MARTINEZ, CLEOVES B.	LATA	M321
84	LOST, DAMAGE	DOCUMENT CONTROL	M707
85	RICH, HUGH	ERM GOLDER	M327
6	TRUJILLO, VINCE	ESA-13	J576
87	HENKE, MIKE	ESA-DE	G787
88	MYNARD, RANDY	ESA-DE	G787
89	MCMATH, GARY	ERM GOLDER	M327
90	MORGENSTERN, MICHELLE	ERM GOLDER	M327
91	ESHLEMAN, TROY L.	ERM GOLDER	M327
92	VELASQUEZ, ELMER	ESH-19	K490
93	COHEN, STEPHANIE	ESH-19	K490
94	CATHERWOOD, BOB	ESA-DE	G787
95	LOST, DAMAGE	DOCUMENT CONTROL	M707
96	FUNK, AL	ERM GOLDER	M327
97	GAY, KYLE	ERM-GOLDER	M327
98	SOBOJINSKI, LYNDA	CST-18	E525
99	DIXON, DAVID	MORRISON & KNUDSEN	M892
100	CYR, ROBIN	MORRISON & KUNDSON	M892

LOS ALAMOS NATIONAL LABORATORY
ENVIRONMENTAL RESTORATION PROGRAM

STANDARD OPERATING PROCEDURES

GENERAL INSTRUCTIONS

1. Please read and familiarize yourself with the Purpose and Scope of each section and the Field Activity Flow Chart (Attachment A), located in LANL-ER-SOP-1.01,R0.

2. Ensure that the personnel you supervise have access to your manual or ensure that they are issued "controlled working copies" of appropriate procedures.

3. Follow the directions in the administrative procedure LANL-ER-AP-01.4, R0, Distribution of Controlled Documents Prepared for the Environmental Restoration Program, to request controlled working copies of procedures for your employees.

4. Follow the guidelines in the administrative procedure LANL-ER-AP-01.5,R0, Revision or Interim Change of Environmental Program Controlled Documents, to initiate interim changes or revisions to procedures.

5. Request unmarked copies of the Chain of Custody/Request for Analysis form located in LANL-ER-SOP-01.4, R1 by contacting John Miglio at CST-9, MS K484, 665-8742.

6. Request unmarked copies of all other SOP forms by contacting the Controlled Document Coordinator (Yvonne Gibson) at EM/ER, MS M707, 665-6498.

7. **PLEASE return your manual** to the Document Control Coordinator for EM/ER, if you leave or are no longer conducting work for the ER Program.

8. Contact the Controlled Document Coordinator **before** you transfer your controlled manual to another person.

LANL-ENVIRONMENTAL RESTORATION PROGRAM STANDARD OPERATING PROCEDURES MANUAL

SUPERSEDED DOCUMENTS

SUPERSEDED DOCUMENT NO.	DOCUMENT TITLE & EFFECTIVE DATE	DATE SUPERSEDED	SUPERSEDED BY
LANL-ER-SOP-1.04, R0	Sample Control and Field Documentation 03/16/92	January 5, 1993	LANL-ER-SOP-1.04,R1 Sample Control and Field Documentation
LANL-ER-SOP-01.03,R0	Handling, Packaging and Shipping of Samples 03/16/92	May 5, 1994	LANL-ER-SOP-01.03,R1 Handling, Packaging and Shipping of Samples
LANL-ER-SOP-01.04,R1	Sample Control and Field Documentation 01/05/93	May 5, 1994	LANL-ER-SOP-01.04,R2 Sample Control and Field Documentation
LANL-ER-SOP-3.01, R0	Land Surveying Procedures 05/05/94	September 6, 1994	LANL-ER-SOP-3.01,R1 Land Surveying Procedures
LANL-ER-SOP-3.02,R0	General Surface Geophysics 06/25/94	September 17, 1993	LANL-ER-SOP-3.02,R1 General Surface Geophysics
LANL-ER-SOP-10.04,R0	MCA 465/Fidler Instrument System 09/17/94	May 5, 1994	LANL-ER-SOP-10.04,R1 Fidler Instrument System
LANL-ER-SOP-12.01,R1	Field Logging, Handling and Documentation of Borehole Samples 05/25/94	June 27, 1996	LANL-ER-SOP-12.01,R2 Field Logging, Handling and Documentation of Borehole Samples

LANL-ER-SOP-12.02,R1	Transportation, Receipt, and Admittance of Borehole Samples for The Sample Management Facility 05/25/94	June 27, 1996	LANL-ER-SOP-12.02,R2 Transportation, Receipt, and Admittance of Borehole Sample for The Sample Management Facility
LANL-ER-SOP-1.06,R0	Management of RFI-Generated Waste 03/16/92	September 6, 1994	**LANL-ER-AP-05.3,R0** Management of Environmental Restoration Program Waste
LANL-ER-SOP-12.04,R0	Physical Processing and Storage of Borehole Samples at the Sample Management Facility 06/13/94	March 10,1995	LANL-ER-SOP-12.04,R1 Physical Processing and Storage of Borehole Samples at the Sample Management Facility
LANL-ER-SOP-12.05,R0	Examination of Samples at the Sample Management Facility 06/13/94	March 10,1995	LANL-ER-SOP-12.05,R1 Examination of Samples at the Sample Management Facility
LANL-ER-SOP-01.04,R2 (ICN 10)	Sample Control and Field Documentation	March 10, 1995	LANL-ER-SOP-01.04,R3 Sample Control and Field Documentation
LANL-ER-SOP-01.06,R0	Management of RFI-Generated Waste	March 16, 1992	LANL-ER-SOP-1.06,R1 Management of Environmental Project Waste

Standard Operating Procedures (SOPs) for Environmental Restoration

Table of Contents

Volume I and II

UNCONTROLLED

Procedure Number	Document Title	Effective Date
LANL-ER-SOP-01- VOL I	*** GENERAL INSTRUCTIONS ***	09/01/95
LANL-ER-SOP-01.01, R0,ICN11	General Instructions for Field Investigations	04/24/95
LANL-ER-SOP-01.02, R0	Sample Container and Preservation	03/16/92
LANL-ER-SOP-01.03, R1	Handling, Packaging and Shipping of Samples	05/05/94
LANL-ER-SOP-01.04, R2,ICN10	Sample Control and Field Documentation	03/03/95
LANL-ER-SOP-01.04,R3	LANL-ER-SOP-01.04,R3 Sample Control and Field Documentation	11/15/95
LANL-ER-SOP-01.05, R0	Field Quality Control Samples	03/16/92
LANL-ER-SOP-01.07, R0	Operational Guidelines For Taking Soil And Water Samples In Explosive Areas	03/21/95
LANL-ER-SOP-01.08, R0	Field Decontamination Of Drilling And Sampling Equipment	03/31/95
LANL-ER-SOP-01.09, R0,ICN13	Management Of Environmental Restoration Radioactive Material Management Areas	11/10/95
LANL-ER-SOP-03- VOL I	*** RECONNAISSANCE / FIELD SURVEYS ***	09/01/95
LANL-ER-SOP-03.01, R1,ICN6	Land Surveying Procedures	01/31/95

Standard Operating Procedures (SOPs) for Environmental Restoration

Table of Contents

Volume I and II

UNCONTROLLED

Procedure Number	Document Title	Effective Date
LANL-ER-SOP-03.02. R1	General Surface Geophysics	09/17/93
LANL-ER-SOP-03.04, R0	Petrography	03/16/92
ANL-ER-SOP-03.05, R0	Determination of Volume Constituents in Thin Sections of Rock	03/16/92
LANL-ER-SOP-03.06, R0	Fracture Characterization	03/16/92
LANL-ER-SOP-03.07, R0	Characterization of Lithologic Variations Within the Rock Outcrops of a Volcanic Field	03/16/92
LANL-ER-SOP-03.08, R0	Geomorphic Characterization	05/19/93
LANL-ER-SOP-03.09, R0	Geologic Mapping of Bedrock Units	03/16/92
LANL-ER-SOP-03.10, R0	Trenching and Logging	05/19/93
LANL-ER-SOP-03.11, R0	Coordinating and Evaluating Geodetic Surveys	03/21/95
LANL-ER-SOP-03.12, R0	Field and Laboratory Notebook Documentation for Environmental Restoration Earth Science Studies	11/17/93
LANL-ER-SOP-04- VOL I	*** DRILLING, EXCAVATING, SAMPLING AND LOGGING ***	09/01/95

Standard Operating Procedures (SOPs) for Environmental Restoration

Table of Contents

Volume I and II

UNCONTROLLED

Procedure Number	Document Title	Effective Date
LANL-ER-SOP-04.01, R0	Drilling Methods and Drill Site Management	03/16/92
LANL-ER-SOP-04.04, R0	General Borehole Logging	06/25/93
LANL-ER-SOP-05- VOL I	*** WELL INSTALLATION, DEVELOPMENT AND WATER SAMPLING TECHNIQUES ***	09/01/95
LANL-ER-SOP-05.01, R0	Monitor Well Construction	06/01/92
LANL-ER-SOP-05.02, R0	Well Development	06/01/92
LANL-ER-SOP-06- VOL I	*** SAMPLING TECHNIQUES ***	09/01/95
LANL-ER-SOP-06.01, R0	Purging of Wells for Representative Sampling of Ground Water	03/16/92
LANL-ER-SOP-06.02, R0	Field Analytical Measurements of Groundwater Samples	03/16/92
LANL-ER-SOP-06.03, R0	Sampling for Volatile Organics	03/16/92
LANL-ER-SOP-06.04, R0	Sampling Commercial/Municipal/Domestic Wells	03/16/92
LANL-ER-SOP-06.05, R0	Soil Water Samples	03/16/92

Standard Operating Procedures (SOPs) for Environmental Restoration

Table of Contents

Volume I and II

UNCONTROLLED

Procedure Number	Document Title	Effective Date
LANL-ER-SOP-06.06, R0	Tensiometer (Soil Suction Monitor) Installation and Measurement	03/16/92
LANL-ER-SOP-06.09, R0,ICN7	Spade and Scoop Method for Collection of Soil Samples	02/01/95
LANL-ER-SOP-06.10, R0	Hand Auger and Thin Wall Tube Sampler	03/16/92
NL-ER-SOP-06.11, R0	Stainless Steel Surface Soil Sampler	03/16/92
LANL-ER-SOP-06.13, R0	Surface Water Sampling	03/16/92
LANL-ER-SOP-06.14, R0,ICN9	Sediment Material Collection	02/17/95
LANL-ER-SOP-06.15, R0	Coliwasa Sampler for Liquids and Slurries	03/16/92
LANL-ER-SOP-06.16, R0	Thief Sampler for Dry Powders or Granules	03/16/92
LANL-ER-SOP-06.17, R0	Trier Sampler for Sludges and Moist Powders or Granules	03/16/92
LANL-ER-SOP-06.18, R0	Collection of Sand, Packed Powder, or Granule Samples Using the Hand Auger	03/16/92
LANL-ER-SOP-06.19, R0	Weighted Bottle Sampler for Liquids and Slurries in Tanks	03/16/92
ANL-ER-SOP-06.21, R0	Volatile Organic Sampling Train	03/16/92

Standard Operating Procedures (SOPs) for Environmental Restoration

Table of Contents

Volume I and II

UNCONTROLLED

Procedure Number	Document Title	Effective Date
LANL-ER-SOP-06.22, R0	Canister Sampling for Organics - EPA Method TO-14	03/16/92
LANL-ER-SOP-06.23, R0	Measurement of Gamm-Ray Fields using a Sodium Iodide Detector	05/19/93
ANL-ER-SOP-06.24, R0	Sample Collection from Split-Spoon Samplers and Shelby Tube Samplers	05/19/93
LANL-ER-SOP-06.25, R0	Total Suspended Particulate Air Sampling	06/25/93
LANL-ER-SOP-06.26, R0	Core Barrel Sampling for Subsurface Earth Materials	05/19/93
LANL-ER-SOP-06.27, R0	Subsurface Vapor Sampling Using Soil Gas Probes and Single Downhole Packers	09/27/95
LANL-ER-SOP-06.28, R0	Chip Sampling of Porous Surfaces	09/20/94
LANL-ER-SOP-06.29, R0	Single-Stage Sampling for Surface Water Run-Off	09/17/93
LANL-ER-SOP-07- VOL II	*** SUBSURFACE HYDROGEOLOGICAL SITE CHARACTERIZATION ***	09/01/95
LANL-ER-SOP-07.01, R0	Pressure Transducers	03/16/92
LANL-ER-SOP-07.02, R0	Fluid Level Measurements	03/16/92

Standard Operating Procedures (SOPs) for Environmental Restoration

Table of Contents

Volume I and II

UNCONTROLLED

Procedure Number	Document Title	Effective Date
LANL-ER-SOP-07.03, R0	Well Slug Tests	03/16/92
LANL-ER-SOP-07.04, R0	Aquifer Pumping Tests	03/16/92
LANL-ER-SOP-09- VOL II	*** GEOCHEMISTRY ***	09/01/95
LANL-ER-SOP-09.01, R0	Thin Section Preparation	03/16/92
LANL-ER-SOP-09.02, R0	Operating the Microprobe	03/16/92
LANL-ER-SOP-09.03, R0	Operation of Siemens X-Ray Diffractometer	03/16/92
LANL-ER-SOP-09.04, R0	Calibration and Alignment of the Siemens Diffractometers	03/16/92
LANL-ER-SOP-09.05, R0	Clay Mineral Separation for X-Ray Diffraction Analysis	03/16/92
LANL-ER-SOP-09.06, R0	Zeolite Purification and Separation	03/16/92
LANL-ER-SOP-09.07, R0	Operating Instructions for International Scientific Instruments Model DS-130 Scanning Electron Microscope and Tracor Northern Series II X-Ray Analyzer	03/16/92
LANL-ER-SOP-09.09, R0	Certification of Standards for Electron Microanalysis	03/16/92

Standard Operating Procedures (SOPs) for Environmental Restoration

Table of Contents

Volume I and II

UNCONTROLLED

Procedure Number	Document Title	Effective Date
LANL-ER-SOP-10- VOL II	*** FIELD SCREENING TECHNIQUES ***	09/01/95
LANL-ER-SOP-10.01, R0	Screening of PCBs in Soil	03/16/92
LANL-ER-SOP-10.04, R1	Fidler Instrument System	05/05/94
LANL-ER-SOP-10.05, R0,ICN3	Field Analysis of Total Hydrocarbons Using the Hanby Method	03/24/94
LANL-ER-SOP-10.06, R0	High Explosives Spot Test	05/31/95
LANL-ER-SOP-10.07, R0	Field Monitoring for Surface and Volume Radioactivity Levels	09/20/94
LANL-ER-SOP-10.10,R0	Radiation Scoping Surveys	11/27/95
LANL-ER-SOP-11- VOL II	*** GEOTECHNICAL ANALYSIS ***	09/01/95
LANL-ER-SOP-11.01, R0	Measurement of Bulk Density, Dry Density, Water Content, and Porosity in Soil	03/16/92
LANL-ER-SOP-11.02, R0	Particle Size Distribution of Soil/Rock Samples	03/16/92
LANL-ER-SOP-11.03, R0	Permeability of Granular Soils	03/16/92
LANL-ER-SOP-11.04, R0	Soil and Core pH	03/16/92

Standard Operating Procedures (SOPs) for Environmental Restoration

Table of Contents

Volume I and II

UNCONTROLLED

Procedure Number	Document Title	Effective Date
LANL-ER-SOP-11.05, R0	Total Organic Carbon	03/16/92
LANL-ER-SOP-11.06, R0	Cation-Exchange Capacity	03/16/92
ANL-ER-SOP-12- VOL II	*** CURATORIAL MANAGEMENT ACTIVITIES ***	09/01/95
LANL-ER-SOP-12.01, R1	Field Logging, Handling, and Documentation of Borehole Samples	05/25/94
LANL-ER-SOP-12.02, R1	Transportation, Receipt, and Admittance of Borehole Samples for the Sample Management Facility	05/25/94
LANL-ER-SOP-12.03, R0	Acceptance of Non-Borehole Samples by the Sample Management Facility	05/25/94
LANL-ER-SOP-12.04, R1	Physical Processing and Storage of Borehole Samples at the Sample Management Facility	03/10/95
LANL-ER-SOP-12.05, R1	Examination of Samples at the Sample Management Facility	03/10/95
LANL-ER-SOP-14- VOL II	*** GROSS MEASUREMENTS OF RADIOACTIVITY IN SOILS ***	09/01/95
LANL-ER-SOP-14.01, R0	Berthold Low Alpha and Beta Activity Counter Calibration, Quality Control, Detection Limit, and Use	08/10/93

Los Alamos National Laboratory **Environmental Restoration Program** Standard Operating Procedure	No: LANL-ER-SOP-07.01 Rev: 0

Pressure Transducers

UNCONTROLLED

	(Print Name)	(Signature)	(Date)
Preparer:	Sandra E. Wagner	Sandra E. Wagner	10-16-91
Quality Review by:	Bruce Gallaher	Bruce Gallaher	9/30/91
Technical Review by:	Bruce Gallaher	Bruce Gallaher	9/30/91
QPPL Approval:	Larry Maassen	Larry Maassen	10-10-91
PM Approval:	Robert W Vocke	Robert W Vocke	10/14/91

Effective Date: 3-16-92

PRESSURE TRANSDUCERS

1.0 PURPOSE

The purpose of this procedure is to describe the methods for conducting office and field checks of pressure transducers for use in the Environmental Restoration (ER) program.

2.0 SCOPE

2.1 Applicability

This procedure is applicable to all personnel who are operating pressure transducers for the ER Program.

2.2 Training

The field team leader should ensure that field team members understand the use of pressure transducers and the specific data loggers with which they are to be used. The field team members must document that they have read and understand this procedure, as well as the procedures in Section 1.0, General Instructions.

UNCONTROLLED

3.0 DEFINITIONS

A. Hydrostatic pressure: The pressure exerted by a column of fluid.

4.0 BACKGROUND AND/OR CAUTIONS

A pressure transducer measures pressures over a specific range of submergence. Outside this range, measurements will not be accurate. If the transducer is over-pressured, permanent damage can occur; therefore, the transducer probe must <u>never</u> be submerged beyond its rated depth. Pressure transducers are designed to be used with automatic data logging instruments and send a current to the data logger. The current is proportional to the pressure and can be converted to meaningful units by the data logger. The pressure measured is the total pressure, which includes the hydrostatic pressure of the fluid column above the transducer and the atmospheric pressure at the fluid surface.

Most pressure transducers are self-compensating for changes in atmospheric pressure via a vent to the atmosphere. The vent port is normally located where the cable attaches to the data logger, thus, where extension cables are being used, the operator should ensure that the connecter is not submerged. Also, there should be <u>no</u> sharp bends in the transducer cable.

There are a number of pressure transducers on the market and the operator must consult the manufacturer's specifications concerning maintainence and chemical compatibility with contaminants which are expected to be present in the medium to be monitored (usually water).

Under normal conditions it should not be necessary to disassemble the pressure transducer. However, if it does become necessary, follow the manufacturer's instructions carefully and check the accuracy of the reassembled probe as discussed in Section 6.0.

NOTE: Many data loggers contain lithium batteries, which are classified by the Department of Transportation (DOT) as hazardous material. Contact the DOT and all other authorities (i.e., Federal Express, Airport, etc.) involved with equipment shipment for instructions.

Site workers preparing for field operations should read and understand the procedures outlined in LANL-ER-SOPs, Section 2.0, Health and Safety in the Field. In addition, site workers should refer to site-specific Operable Unit Health and Safety plans for the particular health and safety equipment to be used.

UNCONTROLLED

5.0 EQUIPMENT

Equipment to implement this procedure are listed in Attachment A.

6.0 PROCEDURE

Be sure to record the information on the manufacturer's data log sheet. Begin by identifying the serial number and model number of the instrument. Use the Daily Activity Log (refer to SOP-01.04).

A. Assemble the equipment and supplies listed in Attachment A. Consult manufacturers instructions to ensure the proper operation of all equipment.

B. Ensure the proper operation of the electronic data logger and pressure transducer. Review guidelines in the operator's manual for the electronic data logger. Consult the manufacturer's instructions as to the setting of transducer depth, the reference elevation, scale factor, and test number. Be sure that the data logger or its battery pack is fully charged. Using a 3- to 4-ft column of water (for example, capped PVC casing), test the response of the electronic data logger and pressure transducer.

C. Conduct a test for the proper depth response and a test for the drift of readings in this column, as discussed below. These tests constitute a calibration check for the data logging instrumentation. Perform this check daily where possible.

Depth Response Test

1. Mark the length of the transducer cable at measured intervals appropriate for the column of water. Using a 4-ft column of water, for example, mark the cable with tape at 1-ft intervals (for a 3-ft length), measuring from the transducer end.

2. Connect the cable to the data logger and put the data logger into display mode so that changes in hydrostatic pressure can be monitored.

3. Fill a capped PVC well screen with water and lower the transducer probe into the filled casing to the first mark and obtain a reading. Repeat until the last mark has been reached. Start the logging sequence.

4. Wait one minute and raise the transducer a measured length. Wait one more minute.

5. Continue raising the transducer cable by the measured increments and logging the results for one minute until all segments have been measured.

6. Check the depth recorded on the data logger against the actual depths. If the difference is greater than 5% of the measured depth, return the transducer to the manufacturer for calibration.

Drift Test

1. Lower the transducer into the water column and tape to the edge of the column.

2. Connect the transducer cable to the electronic data logger and begin a 15-min logging sequence.

3. Check the results for noticeable drift of the depth measurement.

4. Notify the manufacturer if an unacceptable noticeable drift is occurring.

D. Locate the monitoring wells where the pressure transducer will be calibrated.

E. Decontaminate the transducer and cable as specified in SOP-02.07, General Equipment Decontamination.

F. Take an initial water level measurement from the well to be monitored using a tape or water level sounder according to SOP-07.02, Fluid Level Measurement. Record all pertinent information on the Groundwater Elevation form found in SOP-07.02.

G. Before beginning the monitoring, set up the data logger as outlined in the manufacturer's manual. The type of information may vary, depending on the model used. When using different models, consult the operator's manual for the proper data entry sequence to be used. Be sure that the field operator understands what computations must be made and how to save the data to prevent accidental data loss.

H. Cover sharp edges of the well casing with duct tape to protect the transducer cables. Lower the pressure transducer into place, monitoring the hydrostatic pressure during installation. Duct tape transducer into place prior to commencement of test.

UNCONTROLLED

I. Check the depth of the transducer using the display mode of the data logger and test transducer response by raising it about a foot.

J. Commence the water level measuring task to be performed (for example, slug test or pumping test).

K. Ensure that all equipment is accounted for and decontaminated (SOP-02.07). If decontamination is required, dispose of all decon materials according to SOP-01.06, Management of RFI-Generated Waste.

L. Print out data prior to the shutdown of the electronic data logger (see operator's manual).

7.0 REFERENCES

The following procedures are directly associated with this procedure and should be reviewed before field operations:

LANL-ER-SOPs in Section 1.0, General Instructions
LANL-ER-SOPs in Section 2.0, Health and Safety in the Field.
LANL-ER-SOP-07.02, Fluid Level Measurement.
LANL-ER-SOP-07.03, Well Slug Tests.
LANL-ER-SOP-07.04, Aquifer Pumping Tests.

Enviro-Labs, Inc. 1986. "Operation manual: EI-200 Groundwater Monitoring System with Model EL-120-MSP Data Logger," April 1986. Milford, NH.

In-Situ, Inc. 1984. "Owner's Manual: Hydrologic Analysis System, Model SE200," April 1984. Laramie, WY.

8.0 RECORDS

A. Completed Groundwater Elevation form.

B. Completed Daily Activity Log which will include calibration data, any calculations, decontamination procedures, any deviations, data from the electronic data logger, and additional comments.

9.0 ATTACHMENTS

A. Equipment and supplies checklist

UNCONTROLLED

EQUIPMENT AND SUPPLIES CHECKLIST FOR PRESSURE TRANSDUCERS

_____ Electronic data logger and printer or level head

_____ Pressure transducer and cable

_____ Water level sounder

_____ Tape measure graduated in 0.01 ft

_____ Capped PVC casing

_____ Duct tape

_____ Clean water

_____ Decontamination equipment

_____ Specifications (copies) for pressure transducer being used and manual for data logger

_____ H&S protective clothing

_____ Waterproof pen

_____ Groundwater Elevation forms

_____ Daily Activity Logs

UNCONTROLLED

Los Alamos National Laboratory **Environmental Restoration Program** Standard Operating Procedure	No: LANL-ER-SOP-07.02 Rev: 0

Fluid Level Measurements

UNCONTROLLED

	(Print Name)	(Signature)	(Date)
Preparer:	Sandra E. Wagner	Sandra E. Wagner	11-16-91
Quality Review by:	Bruce Gallaher	Bruce Gallaher	9/30/91
Technical Review by:	ALAN STORER	[illegible]	10/2/91
QPPL Approval:	Larry Maassen	Larry Maassen	10/10/91
PM Approval:	Robert W Vocke	Robert W Vocke	10/14/91

Effective Date: 3-16-92

FLUID LEVEL MEASUREMENT

1.0 PURPOSE

The purpose of this procedure is to describe the method for determining the depth-to-fluid and groundwater elevations in an open borehole, cased borehole, monitor well, or piezometer for the Environmental Restoration (ER) program.

2.0 SCOPE

2.1 Applicability

This procedure is applicable to all field team members who are operating water level instruments for the ER program.

2.2 Training

The field team leader is responsible for monitoring the proper implementation of this procedure. The field team members should be familiar with the objectives and be trained in the procedures of fluid level measurement and must certify that they have read and understand this procedure and the procedure in Section 1.0, General Instructions.

3.0 DEFINITIONS

Piezometer: An observation well used to measure the potentiometric surface of groundwater in an aquifer.

4.0 BACKGROUND AND/OR CAUTIONS

Water level measurements are generally used to construct potentiometric surface maps. The documentation of water level measurements, air quality for the health and safety of field personnel, and equipment calibration will be performed as described in the associated SOPs. Refer to the site-specific work plan for more information on the scope of work activities, equipment, and frequency of measurements for this SOP.

Since water level measurements from boreholes, piezometers, or monitor wells are used to construct potentiometric surface maps, ideally, water level measurements should be collected within a 24-hr period. Under the following conditions, all measurements must be taken within a shorter interval:

- A range of observed changes between wells that is too large to be indicative of natural groundwater gradient
- Drastic atmospheric pressure changes

UNCONTROLLED

- Aquifers affected by river stage, impoundments, or unlined ditches
- Aquifers stressed by intermittent pumping of production wells
- Aquifers being actively recharged because of precipitation event.

The device used to measure water levels should be adequate to attain an accuracy of 0.01 ft. Generally acceptable devices are listed below:

- Steel tape
- An electric sounder
- A petroleum product probe
- A transducer.

Additionally, the following devices can be used with accuracy of about 1.0 ft.

- A reflection sounder
- An airline.

Allow water levels in piezometers and monitor wells to stabilize for a minimum of 24 hr after well construction and development before measurements are taken. Recovery may take longer in wells completed in tight formations.

Site workers preparing for field operations should read and understand the procedures outlined in LANL-ER-SOPs, Section 2.0, Health and Safety in the Field. In addition, site workers should refer to site-specific Operable Unit Health and Safety plans for the particular health and safety equipment to be used.

5.0 EQUIPMENT

Equipment to implement this procedure are listed in Attachment A.

6.0 PROCEDURE

A. Locate monitor wells to be measured and the appropriate decontamination area. Check decontamination zones and barricades to public access.

B. Decontaminate all sampling equipment before taking the first measurement and between measurement intervals (SOP-02.07, General Equipment Decontamination).

UNCONTROLLED

C. When taking a number of water level measurements, it is preferable to start at those wells that are the least contaminated and proceed to those wells that are the most contaminated.

D. Whenever a water level is measured, enter a description of the sampling location and record of the measured value onto the Groundwater Elevation form (Attachment B). Fill out the forms as described in Attachment C, Data Form Completion. If appropriate, record information regarding the elevation and thickness of the Non Aqueous Phase Liquid (NAPL) to determine the actual groundwater elevation, but this condition is not anticipated in groundwater monitoring of the Los Alamos National Laboratory or its environs.

E. Place equipment on a Teflon™ or plastic sheet, or in a stainless steel bucket

F. Remove locking well and well casing cap. Note the location, time of day, and date on the appropriate data form.

G. If required by site-specific conditions, monitor the headspace of the well with a photoionization detector or a flame ionization detector to determine the presence of volatile organic compounds and record the measurements on appropriate forms.

H. Place a survey mark in the casing as a reference measuring point. The mark should be permanent; a groove cut with a file is recommended. Mark another measuring reference on the grout apron and guard pipe. This provides consistency in future water level measurements. If the measuring point is missing, record the water level relative to the ground surface, but mark the casing at the point the measurement was made. Record the distance from the new mark to the ground surface on the data form and describe the new measuring point in the comments column of the data form. Document the measuring point on the data form.

I. Lower an electric water level measuring device or equivalent (for instance, permanently installed transducers, airline, or popper) into the well until the liquid surface is encountered. A popper is a metal cylinder with a concave undersurface that is attached to the end of a steel tape. The popper makes an audible "pop" when it hits the water allowing the distance to the water surface to be determined on the tape.

J. Measure the distance from the liquid surface to the reference measuring point on the well casing and record this distance on the data form in the comments column. If the well casing is damaged, measure from some other permanently fixed structure or the ground surface and note this modification on the data form.

K. Measure depth-to-liquid at least twice or until results are reproduced and record each measurement in the comments column of the data form. Measure the distance to the water level if it is different from the initial liquid level. Record the reproduced measurement in the depth-to-liquid column on the field form.

L. Remove all downhole equipment; replace the well casing cap and locking steel caps.

UNCONTROLLED

M. Rinse all downhole equipment and store for transport to the decontamination area.

N. Note any physical changes (like erosion or cracks) in the protective concrete pad or variation in the total depth of the well on the data form.

O. If using pressure transducers to measure water levels, refer to SOP-07.01, Pressure Transducers.

6.1 Preliminary Determinations

A. Complete all data collection forms and sign all pages.

B. Label monitor well or property stake the borehole and write location ID on the location stake or protective casing.

6.2 Postoperation Activities

Ensure that all equipment is accounted for and decontaminated (see SOP-02.07).

UNCONTROLLED

7.0 REFERENCES

Procedures directly associated with this procedure that should be reviewed prior to measuring water levels include:

LANL-ER-SOPs in Section 1.0, General Instructions.
LANL-ER-SOPs in Section 2.0, Health and Safety in the Field.
LANL-ER-SOP-07.01, Pressure Transducers.

EPA. 1986. "RCRA Groundwater Monitoring Technical Enforcement Guidance Document." U.S. Environmental Protection Agency unnumbered document. U.S. Government Printing Office, Washington, D.C.

8.0 RECORDS

A. Completed Groundwater Elevation Form

B. Daily Activity Log that may contain any additional information including deviations

9.0 ATTACHMENTS

A. Equipment and Supplies Checklist

B. Groundwater Elevation Form

C. Data Form Completion

UNCONTROLLED

EQUIPMENT AND SUPPLIES CHECKLIST FOR FLUID LEVEL MEASUREMENTS

_____ Site map showing well locations

_____ Steel tape and blue surveyor's chalk

_____ Electric sounder

_____ Reflection sounder

_____ Transducer and data logger

_____ Airline

_____ Petroleum product detection probe

_____ Plastic or Teflon™ sheeting

_____ Decontamination solutions

_____ Keys to well locks

_____ Tape measure graduated in 0.01 ft

_____ Indelible dark ink pens

_____ Daily Activity Logs

_____ Groundwater Elevation Form

UNCONTROLLED

Date _____

LOS ALAMOS NATIONAL LABORATORY
ENVIRONMENTAL RESTORATION
GROUNDWATER ELEVATION FORM

Sheet _____ of _____

Technical Area _____ Site Work Plan: _____

Operable Unit _____ Signature: _____

LOCATION	LOG DATE	LOG TIME	ELEVATION[1] GL Datum	ELEVATION[1] (TOC)[2]	TAPE READING Meas Pt	TAPE READING Water Lev	DEPTH TO WATER	ELEVATION GROUNDWATER	NAPL[3] THICKNESS

Measurement Method and Probe Type _____

Comments: _____

[1]Use the appropriate measuring point.

[2]TOC is Top of Casing

[3]NAPL (Non Aqueous Phase Liquid). Caution: If NAPL is encountered, the groundwater level must be corrected.

ER-SOP-07.02, R0 4/1/91

UNCONTROLLED
CONTACT THE PROGRAM OFFICE FOR MASTER FORMS

DATA FORM COMPLETION

GROUNDWATER ELEVATION FORM

Use an indelible dark ink pen. Make an entry in each blank. Where there is no data entry, enter UNK for Unknown, NA for Not Applicable, or ND for Not Done, etc. To change an entry, draw a single line through it, add the correct information above it, and date and initial the change. For all forms, complete the following information:

1. Technical Area (TA). Two-digit number indicating the TA in which the sampling is being done or sample is being studied.

2. Operable Unit. Four-digit number indicating the operable unit in which the sampling is being done or sample is being studied.

3. Log Date and Time. The date and time when the measurement was made, in the following formats: DD-MMM-YY (e.g., 01-Jan-91), and the 24-hour clock time (e.g., 0837 for 8:37 a.m. and 1912 for 7:12 p.m.).

4. Sheet Number. Number all the sheets that are used for this activity, by day or by some practical unit.

5. Weather and other comments. Record all other conditions pertinent to the sample collection in this section on the Daily Activity Log in SOP-01.01.01.

6. Elevation. Record the elevation of the well to the ground level datum top of the casing (TOC) whichever is appropriate using survey or other information.

7. Depth-to-Water. The water level measurement in feet, tenths of feet, or hundredths of feet. if a NAPL is in evidence, record the depth to the NAPL thickness. Use the Daily Activity Log to record additional NAPL information.

8. Measurement Method and Type of Probe. Record the method of measurement and the probe manufacturer's name and the serial number of the probe.

UNCONTROLLED

Los Alamos National Laboratory **Environmental Restoration Program** Standard Operating Procedure	No: LANL-ER-SOP-07.03 Rev: 0

Well Slug Tests

UNCONTROLLED

	(Print Name)	(Signature)	(Date)
Preparer:	Sandra E. Wagner	Sandra E. Wagner	11-16-91
Quality Review by:	Bruce Gallaher	Bruce Gallaher	9/30/91
Technical Review by:	STEPHEN McLIN	Stephen G. McL	10/1/91
QPPL Approval:	Larry Maassen	Larry Maassen	10/10/91
PM Approval:	Robert W Vocke	Robert W Vocke	10/14/91

Effective Date: 3-16-92

WELL SLUG TEST

1.0 PURPOSE

This procedure defines field methods for the collection of data for determining saturated hydraulic conductivity under in situ conditions by the slug test withdrawal method of analysis for the Environmental Restoration (ER) program.

2.0 SCOPE

2.1 Applicability

This procedure is applicable for determining hydraulic conductivity using the slug test withdrawal method for the ER program.

2.2 Training

The field team leader is responsible for monitoring the proper implementation of this procedure. The field team members should be familiar with the objectives of slug testing and should document that they have both read and understand this procedure and the procedures in Section 1.0, General Instructions.

UNCONTROLLED

3.0 DEFINITIONS

A. Hydraulic conductivity: The flow rate of water in gallons per day through a cross section of one square foot under a unit hydraulic gradient, at the prevailing temperature (gpd/ft^2).

B. Storage coefficient(s): The volume of water an aquifer releases from or takes into storage per unit surface area of the aquifer per unit change in head.

4.0 BACKGROUND AND/OR CAUTIONS

The slug test measures the rate at which groundwater stabilizes in a well over time due to the injection or withdrawal of a mass (slug) beneath the groundwater surface. From this water level fluctuation versus time data, the hydraulic conductivity of the immediate area can be determined. Refer to the site-specific work plan for more information on the scope of work activities for which slug testing is required and the locations of the wells that are to be tested.

With the slug test the hydraulic conductivity or transmissibility of an aquifer is determined from the rate of rise of the water level in a well or borehole after a certain volume or "slug" of water is suddenly removed from the well. The slug is inserted and the water level is allowed to reach equilibrium. Then the slug is suddenly removed and the rise in water level is measured with time.

The primary advantages of using slug tests to estimate conductivities are: (a) estimates can be made in situ and errors incurred in the laboratory testing of disturbed samples can be avoided; (b) tests can be performed quickly at relatively low costs because a pumping well and observation wells are not required; and (c) the hydraulic conductivity of small, discrete portions of an aquifer can be estimated (for example, sand layers in a clay).

Limitations of slug testing include: (a) only the hydraulic conductivity of the area immediately surrounding the well is estimated, which may not be representative of the average hydraulic conductivity of the local area; (b) certain assumptions made in the analysis process, if the assumptions are inappropriate for the geologic conditions at the site, the slug test data are invalid; (c) the storage coefficient, S, usually cannot be determined; and (d) data sufficient for analysis may not be collected if the hydraulic conductivity is relatively high.

The time required for a slug test is a function of the volume of the slug, the hydraulic conductivity of the formation, and the type of well completion. The slug volume should be large enough that a sufficient number of water level measurements can be made before the water level returns to equilibrium conditions. The length of the test may range from less than a minute to several hours.

If the well is to be used as a monitoring well, take precautions so that the contamination does not occur through material introduced into the well. If water is added to the monitoring well, obtain it from an uncontaminated source and transport it in a clean container. Clean bailers or measuring devices before the test (SOP-02.07, General Equipment Decontamination). If tests are performed on more than one monitoring well, avoid cross-contamination of the wells.

Conduct slug tests on relatively undisturbed wells. If a test is conducted on a well that has recently been pumped for water-sampling purposes, the measured water level must be within 0.1 ft of the water level before sampling. At least one week should elapse between the drilling of a well and the performance of a slug test.

NOTE: The exact dimensions of the monitoring well, borehole, casing, and sand pack must be recorded to analyze the slug test data correctly.

Site workers preparing for field operations should read and understand the procedures outlined in LANL-ER-SOPs, Section 2.0, Health and Safety in the Field. In addition, site workers should refer to site-specific Operable Unit Health and Safety plans for the particular health and safety equipment to be used.

5.0 EQUIPMENT

Equipment to implement this procedure is listed in Attachment A.

UNCONTROLLED

6.0 PROCEDURE

The following general procedures should be used to collect and report slug test data. The procedures required for a particular slug test may vary slightly from those described, depending on site-specific conditions. Modifications to the test procedures will be contained in the site-specific work plan.

Procedures for conducting the slug test with a pressure transducer and data logger, as well as a water level probe, are described below. Be sure to complete all data collection forms.

6.1 Slug Test with Pressure Transducer and Data Logger

Before beginning the slug test, enter the required information into the electronic data logger. Information may vary, depending on the model used. When using different models, consult the operations manual for the proper data-entry sequence to be used. See SOP-07.01 for the procedure for calibration and use of a pressure transducer.

When the slug test is performed with an electronic data logger and pressure transducer, store all data internally or on computer diskettes or tape. The information will be transferred directly to the main computer and analyzed. Maintain a computer printout of the data in the files as documentation.

A. Determine the static water level in the well, measuring the depth-to-water periodically for several minutes to several hours, and taking the average of the readings (SOP-07.02, Fluid Level Measurement). Record information on the Groundwater Elevation form found in SOP-07.02. Additional information should be recorded on the Daily Activity log in SOP-01.01.01, Records.

B. Install the transducer and cable in the well below the target drawdown estimated for the test. Be sure this depth of submergence is within the design range stamped on the transducer. Temporarily tape the transducer cable to the well to keep the transducer at a constant depth.

C. After connecting the transducer cable to the electronic data logger, enter the initial water level and transducer design range into the recording device according to the manufacturer's instructions. The transducer design range will be stamped on the side of the transducer. Record the initial water level on the recording device.

D. Smoothly lower the slug or bailer into the well. Where the slug contacts the water can be detected by observing the transducer readout.

E. Allow the water level to restabilize (within 0.1 ft) and remove the cylinder or bailer. Remove the volumes as quickly and smoothly as possible, because the analysis assumes that an instantaneous change in volume is created in the well.

UNCONTROLLED

F. Continue measuring and recording depth-time measurements until the water level returns to equilibrium conditions or a sufficient number of readings have been made to clearly show a trend on a plot recovery versus the logarithm of time.

G. Lower the slug and repeat the data collection portions of step F.

6.2 Slug Test with Water Level Probe

If the slug test data are collected and recorded manually, record observations on the Slug Test Data form (Attachment B). Fill out the form as described in Attachment C. This method should only be used if an electronic data recorder cannot be obtained. This method cannot be used for aquifers with a high hydraulic conductivity because stabilization of groundwater will occur rapidly.

A. Determine the static water level in the well, measuring the depth-to-water periodically for several minutes and taking the average of the readings (SOP-07.02). Record results on the Groundwater Elevation form.

NOTE: When measuring water level changes, it is important to take the measurements rapidly for accurate results.

B. Smoothly lower the slug or bailer into the well. Where the top slug contacts the water can be estimated by marking the depth-to-water found in part A onto the slug line.

C. Measure and record the depth-to-water and the time at each reading. The moment when the volume or removed is Time Zero. Depths should be measured to the nearest 0.1 ft. The number of depth-time measurements necessary to complete the test varies.

D. Continue measuring and recording depth-time measurements until the water level returns to equilibrium conditions or a sufficient number of readings have been made to clearly show a trend on a plot recovery versus the logarithm of time.

E. Lower the slug and repeat the data collection portions of steps C and D.

F. Decontaminate the downhole equipment according to SOP-02.07, General Equipment Decontamination. Cut off contaminated portions of rope and dispose of them in accordance with SOP-01.06, Management of RFI-Generated Waste.

G. If using an electronic data logger, follow the steps listed below.

1. Stop the logging sequence.

2. Print the data or send to the computer by telephone.

UNCONTROLLED

3. Save memory and disconnect the battery at the end of the day's activities.

H. Check all data collection forms for completeness.

7.0 REFERENCES

The following procedures are directly associated with this procedure and should be reviewed before slug testing:

LANL-ER-SOPs in Section 1.0, General Instructions.
LANL-ER-SOPs in Section 2.0, Health and Safety in the Field.
LANL-ER-SOP-07.01, Pressure Transducers.
LANL-ER-SOP-07.02, Fluid Level Measurement.

Bouwer, H. 1978. "Groundwater Hydrology," McGraw-Hill Book Company, New York, NY.

Bouwer, H., and R. C. Rice. 1980. "A Slug Test for Determining the Hydraulic Properties of Tight Formations," Water Resources Research 16, no. 1: 233-38.

Bouwer, H. 1989. "The Bouwer and Rice Slug Test - An Update," Groundwater 27, no. 3: 304-309.

Cooper, Jr., H. H., J. D. Bredehoeft, and S. S. Papadopulos. 1967. "Response of a Finite-Diameter Well to an Instantaneous Charge of Water," Water Resources Research 13, no. 1.

Department of Interior. n.d. "Ground Water Manual." U.S. Department of the Interior Publication, U.S. Government Printing Office, Washington, D.C.

Earlougher, R. C. 1977. "Advances in Well Test Analysis." Houston, Texas: Society of Petroleum Engineers of AIME.

Ferris, J. G. and D. B. Knowles. 1954. "The Slug Test for Estimating Transmissivity," U.S. Geological Survey Groundwater Note 26.

Freeze, R. Allen, and John A. Cherry. 1979. "Groundwater," Prentice-Hall, Inc., Englewood Cliffs, NJ.

Hvorslev. 1951. "Time Lag and Soil Permeability in Ground-Water Observations," 50. U.S. Army Corps of Engineers, Bulletin No. 36. Washington, D.C.

Johnson Division, UOP, Inc. 1966. "Groundwater and Wells," Johnson Division, UOP, Inc. Publication.

Lohman, S.W. 1972. "Ground-Water Hydraulics," 70. U.S. Geological Survey Paper 708. U.S. Government Printing Office, Washington, D.C.

UNCONTROLLED

Neuman, S.P. 1972. "Theory of Flow in Unconfined Aquifers Considering Delayed Response of the Water Table," Water Resources Research 8. No. 4: 1031.

Papadopulos, S. S., J. D. Bredehoeft, and H. H. Cooper, Jr. 1973. "On the Analysis of Slug Test Data," Water Resources Research 9. No. 4.

Todd, David K. 1980. "Groundwater Hydrology," 2nd ed., John Wiley & Sons, New York, NY.

Walton, William C. 1970. Groundwater Resource Evaluation. McGraw-Hill Book Company, New York, NY.

8.0 RECORDS

A. A Completed Slug Test Data Form.

B. A Completed Groundwater Elevation Form.

C. Daily Activity Log containing any deviations, calibration data, and additional comments.

9.0 ATTACHMENTS

A. Equipment and Supplies Checklist

B. Slug Test Data Form

C. Data Form Completion

UNCONTROLLED

EQUIPMENT AND SUPPLIES CHECKLIST FOR WELL SLUG TESTS

_____ Water pressure transducers, if appropriate

_____ Electric water level indicator or electronic data logger (if transducer method is used)

_____ Weighted tapes with plopper

_____ Steel tape (subdivided into hundredths of feet) and blue surveyor's chalk

_____ Stainless steel slug of a known volume

_____ Teflon™ or stainless bailer of a known volume

_____ Watch or stopwatch with second hand

_____ Tape measure (subdivided into tens of feet)

_____ Semilog graph paper (if required) and straight edge

_____ Appropriate references and calculator

_____ Duct tape

_____ Nonwater-soluble black ink pens

_____ Daily Activity Logs

_____ Groundwater Elevation forms

_____ Slug Test Data forms

UNCONTROLLED

SLUG TEST DATA FORM

LOS ALAMOS NATIONAL LABORATORY
ENVIRONMENTAL RESTORATION
SLUG TEST DATA

Date: _____ Sheet _____ of _____

Technical Area _____ Operable Unit _____ Well Number _____

Site Work Plan: _____

Signature: _____

Test Method: _____ Slug Injection or _____ Slug Withdrawal Exact Slug Dimensions: _____

Well construction details (attach diagram): _____

Method of water level measurement: _____

Comments: _____

ELAPSED TIME (Min)	DEPTH-TO-WATER (Ft)	ELAPSED TIME (Min)	DEPTH-TO-WATER (Ft)

☐ CHECK HERE IF CONTINUED ON BACK OF THIS SHEET

ER-SOP-07.03, R0 5/91

UNCONTROLLED
CONTACT THE PROGRAM OFFICE FOR MASTER FORMS

DATA FORM COMPLETION

SLUG TEST DATA FORM (ATTACHMENT B)

Use an indelible dark ink pen. Make an entry in each blank. For entry blanks for which no data are obtained, enter UNK for Unknown, NA for Not Applicable, or ND for Not Done. To change an entry, draw a single line through it, add the correct information above it, and date and initial the change. For all forms, complete the following information:

1. Technical Area (TA). Two-digit number indicating the TA in which the sampling is being done or sample is being studied.

2. Operable Unit. Four-digit number indicating the Operable Unit in which the sampling is being done or sample is being studied.

3. Log Date and Time. The date and time when the measurement was made, in the following formats: DD-MMM-YY (e.g., 01-JAN-88) and the 24-hour clock time (e.g., 0837 for 8:37 a.m. and 1912 for 7:12 p.m.).

4. Sheet Number. Number all the sheets that are used for this activity, by day or by some practical unit.

5. Weather and Other Comments. Record all other conditions pertinent to the sample collection in this section on the Daily Activity Log in SOP-01.04.

6. Test Method. The slug device is withdrawn (pulled out) from the monitor well.

7. Elapsed Time (Min). Cumulative time readings from the beginning of the test to the end of the test in minutes.

8. Depth-to-Water (Ft). Depth of water recorded in hundredths of feet.

9. Method of Water Level Measurement. Record the type of instrument used to measure water level.

10. Exact Slug Dimensions. The slug and/or bailer dimensions must be known in order to perform calculations properly.

11. Well Construction Details. The well screen length, sand pack length, cased intervals, and borehole dimensions must be known, at a minimum, to perform calculations.

UNCONTROLLED

Los Alamos National Laboratory **Environmental Restoration Program** Standard Operating Procedure	No: LANL-ER-SOP-07.04 Rev: 0

Aquifer Pumping Tests

UNCONTROLLED

	(Print Name)	(Signature)	(Date)
Preparer:	Sandra E. Wagner	Sandra E. Wagner	10-16-91
Quality Review by:	Bruce Gallaher	Bruce Gallaher	9/30/91
Technical Review by:	STEPHEN McLIN	Stephen McLin	10/1/91
QPPL Approval:	Larry Maassen	Larry Maassen	10/10/91
PM Approval:	Robert W Vocke	Robert W Vocke	10/14/91

Effective Date: 3-16-92

AQUIFER PUMPING TEST

1.0 PURPOSE

This procedure states the methods for conducting pumping tests for the determination of the hydraulic properties of water-bearing soils and rocks for the Environmental Restoration (ER) program.

2.0 SCOPE

2.1 Applicability

This procedure is applicable to field team members performing pump tests for the ER program.

2.2 Training

The field team leader is responsible for monitoring the proper implementation of this procedure. The field team member should be familiar with the objectives of pumping tests and must document that he has read and understands this and the procedures in Section 1.0, General Instructions.

UNCONTROLLED

3.0 DEFINITIONS

A. Transmissivity: The rate at which water is transmitted through a unit width of an aquifer under a unit hydraulic gradient (gpd/ft).

B. Specific yield: The ratio of the volume of water that a given mass of saturated rock or soil will yield by gravity to the volume of the mass expressed as a percentage (dimensionless).

C. Hydraulic conductivity: A coefficient of proportionality that describes the rate at which a fluid can move through a permeable medium. It is a function of both the media and of the fluid flowing through it (gpd/ft^2).

D. Storage coefficient: The volume of water an aquifer releases from or takes into storage per unit surface area of the aquifer per unit change in head (dimensionless).

4.0 BACKGROUND AND/OR CAUTIONS

An aquifer pumping test is a controlled field experiment to determine the hydraulic properties of water-bearing soils and rocks. Aquifer characteristics that may be obtained from pumping tests include hydraulic conductivity (K), transmissivity (T), specific yield (Sy) for unconfined aquifers, and storage coefficient (S) for confined aquifers and the vertical hydraulic conductivity of confining layers. Also, the occurrence and position of recharge or impermeable boundaries can

be identified. These parameters can be determined by graphical solutions and computerized programs.

Pumping tests are generally carried out by monitoring the water level over time in the pumping well and each observation well while the pumping well is discharged at a constant rate. These tests provide results that are more representative of aquifer characteristics than those predicted by other methods. They can also be used to determine the hydraulics of secondary aquifer flow. However, pump tests require a greater degree of activity and expense than other methods and therefore may not always be justified for all levels of investigation.

Refer to the site-specific work plan for the duration of the pumping test, the location of the observation well, and the data to be collected. Collection of measurements and documentation of data will be performed as described in the associated procedures.

Site workers preparing for field operations should read and understand the procedures outlined in LANL-ER-SOPs, Section 2.0, Health and Safety in the Field. In addition, site workers should refer to site-specific Operable Unit Health and Safety plans for the particular health and safety equipment to be used.

UNCONTROLLED

5.0 EQUIPMENT

Equipment to implement this procedure are listed in Attachment A.

6.0 PROCEDURE

A. Ensure that permission to discharge is obtained (an NPDES Permit may be required) or that a containment system is available for collecting water that will be pumped during the test. This is especially important for wells that may produce contaminated water. Consult SOP-01.06, Management of RFI-Generated Waste in the event that the site-specific work plan requires containerization of waste.

B. Obtain the information regarding equipment, and equipment modifications necessary to conduct a pumping test, and check the equipment for proper functioning. Obtain assurances from the site drilling crew concerning the completion of the well installation, and the development and the availability of the necessary equipment to conduct the pumping test. The drilling crew is responsible for completing the following tasks and supplying the equipment listed below before field personnel arrive:

   1. Drilling, installing, completing, and developing pumping wells and at least one observation well to the proper specifications identified in the site-specific work plan.

   2. Installing a submersible or turbine pump. All wells should be properly developed before testing.

3. Installing a flow meter in the discharge line of the pumping well to accurately measure and monitor the volume of discharge.

4. Installing sufficient pipe to transport the discharge from the pumping well away from the area to prevent infiltration into the pumped zone.

5. Installing a gate valve along with a pressure regulator on the discharge pipe to control the pumping rate.

6. Placing an outlet near the well head, but past the totalizer and flow meters, for water quality determination and sampling.

C. Calibrate all gauges, transducers, flow meters, and other equipment used in conducting pumping tests before use. Obtain copies of the instrumentation documentation and calibration. File them with the records of test data. Calibration records should contain laboratory measurements. If necessary, perform any on-site zero adjustment or calibration.

D. It is normally advisable to monitor pretest water levels at the test site for about one week before performing the test. This can be accomplished by using a continuous recording device. These records establish the barometric efficiency of the aquifer. The records also help determine if the aquifer is experiencing an increase or decrease in head with time caused by recharge or pumping in the nearby area or by diurnal variations. Record changes in barometric pressure during the test (preferably with an on-site barograph) to correct water levels for any possible fluctuations that may occur from changing atmospheric conditions. Project the pretest water level trends for the duration of the test. These trends or barometric changes may be used to correct water level measurements during the test so that they are representative of the hydraulic response of the aquifer from pumping the test well.

E. The duration of the test is determined by the needs of the project and the aquifer properties. In general, longer tests produce more definitive results. A duration of one to several days, followed by a similar period of monitoring the recovery of the water level, is desirable. There is no need to continue the test if the water level becomes constant with time. This normally indicates that a hydrogeologic source or leaky aquifer condition has been intercepted and that additional useful information will not be collected by continued pumping. One simple test for determining the adequacy of data is to plot the log time compared to drawdown for the most distant observation well. When the plot becomes a straight line on the semilog graph paper, enough data has been collected. (Ideally the straight line should continue over one log cycle.)

F. When the pumping test is performed using an electronic data logger and pressure transducer, store all data internally or on computer diskettes or tape. Directly transfer the information to the main computer and analyze it. Maintain a computer printout of the data in the files for documentation. Take manually determined measurements periodically to verify data recorded by the data logger.

UNCONTROLLED

G. If an electronic data logger and pressure transducer are not used, record all data on the Pumping/Recovery Test Data form (Attachment B). Data collected manually during a logger-transducer pumping test will also be recorded on the form. Fill out the form as described in Attachment C.

H. During a pumping test, measure water levels as often as necessary to produce a meaningful indication of hydraulic properties of the aquifer. Measure water levels as specified in SOP-07.02, Fluid Level Measurement, and record on the Groundwater Elevation form.

NOTE: Pressure transducers and electronic data loggers may be used to reduce the field personnel hours required for the pumping test. Please refer to SOP-07.01 for the operation instructions of pressure transducers.

I. After pumping is concluded, measure recovering water levels to verify the results obtained from the pumping portion of the test. Measure the recovering water levels in the pumping well and the observation wells for a period immediately following the cessation of pumping. Monitoring during recovery should occur for at least half the length of the pumping portion of the aquifer test. The decision to cease monitoring water levels will be based on aquifer recovery.

J. If using an electronic data logger, follow the steps listed below:

1. Stop the logging sequence.

2. Print the data or send it to the computer by telephone.

3. Save memory and disconnect the battery at the end of the day's activities.

K. Decontaminate the transducer(s) and cable(s) as specified in SOP-02.07, General Equipment Decontamination.

L. Make sure all wells are properly labeled and the location ID is readily visible on the guard pipe.

7.0 REFERENCES

The following procedures are directly associated with this procedure and should be reviewed before operations:

LANL-ER-SOPs in Section 1.0, General Instructions.
LANL-ER-SOPs in Section 2.0, Health and Safety in the Field.
LANL-ER-SOP-07.01, Pressure Transducers.
LANL-ER-SOP-07.02, Fluid Level Measurement.

UNCONTROLLED

Boulton, N. S. 1954. "The Drawdown of the Water-Table Under Non-Steady Conditions Near a Pumped Well in an Unconfined Formation." Proceedings of the Institution of Civil Engineers 3, Paper 5979: 564.

Boulton, N. S. 1954. "Analysis of Data from Non-Equilibrium Pumping Tests Allowing for Delayed Yield from Storage." Proceedings of the Institution of Civil Engineers 26, Paper 6693: 469-82.

Bouwer, H. 1978. "Groundwater Hydrology." McGraw-Hill Book Company, New York.

Bredehoeft, J. D. and S. S. Papadopulos. 1980. "A Method for Determining the Hydraulic Properties of Tight Formations." Water Resources Research 16, No. 1: 233-38.

Cooper, Jr., H. H., J. D. Bredehoeft, and S. S. Papadopulos. 1967. "Response of a Finite-Diameter Well to an Instantaneous Charge of Water." Water Resources Research 13, No. 1.

Cooper, Jr., H. H. and C. E. Jacob. 1946. "A Generalized Graphical Method for Evaluating Formation Constants and Summarizing Well-Field History." American Geophysical Union Transactions 27, No. 4: 526-34.

Earlougher, R. C. 1977. Advances in Well Test Analysis. Society of Petroleum Engineers of AIME publication. Houston, Texas.

Freeze, R. Allen, and John A. Cherry. 1979. ."Groundwater." Prentice-Hall, Inc., Englewood Cliffs, New Jersey.

Kruseman, G. P., and N. A. De Ridder, 1976. Analysis and Evaluation of Pumping Test Data, Bulletin 11, International Institute for Land Reclamation and Improvement, Wageningen, The Netherlands.

UNCONTROLLED

8.0 RECORDS

A. A completed Pumping/Recovery Test Data Form

B. A completed Groundwater Elevation form

C. Completed Daily Activity Log containing deviations, calibration data, and all other pertinent information

9.0 ATTACHMENTS

A. Equipment and Supplies Checklist

B. Pumping/Recovery Test Data Form

C. Data Form Completion

UNCONTROLLED

EQUIPMENT AND SUPPLIES CHECKLIST FOR AQUIFER PUMPING TESTS

_____ Water pressure transducer

_____ Electric water level indicator

_____ Weighted tapes with plopper

_____ Steel tape (subdivided into tenths of feet)

_____ Electronic data logger (if transducer method is used)

_____ Tape measure (subdivided into hundredths of feet)

_____ Watch or stopwatch with second hand

_____ Semilog graph paper (if required)

_____ Waterproof ink pen

_____ Thermometer

_____ Appropriate references and calculator

_____ Barometer or recording barograph (for tests conducted in confined aquifers)

_____ Daily Activity Logs

_____ Pumping/Recovery Test Data forms

_____ Groundwater Elevation forms

UNCONTROLLED

PUMPING/RECOVERY TEST DATA FORM

LOS ALAMOS NATIONAL LABORATORY
ENVIRONMENTAL RESTORATION
PUMPING/RECOVERY TEST DATA

Date: ____________ Sheet ______ of ______

Technical Area ____________ Operable Unit ____________ Pump Well No. ____________

Site Work Plan: ____________ Observation Well No. ____________

Signature: ____________

TEST START: ____________ TEST END: ____________

Date: ____________ Date: ____________

Time: ____________ Time: ____________

Static Water Level (Ft) ____________ Static Water Level (Ft) ____________

Average Pumping Rate (Gal/Min) ____________

Measurement Methods ____________

Comments: ____________

Method of water level measurement: ____________

DRAWDOWN TEST			RECOVERY TEST	
ELAPSED TIME (Min)	DEPTH-TO-WATER (Ft)	PUMPING RATE (Gal/Min)	ELAPSED TIME (Min)	DEPTH-TO-WATER (Ft)

ER-SOP-07.04, R0 5/91

UNCONTROLLED
EXAMPLE
CONTACT THE PROGRAM OFFICE FOR MASTER FORMS

DATA FORM COMPLETION

PUMPING/RECOVERY TEST DATA FORM (ATTACHMENT B)

Use an indelible dark ink pen. Make an entry in each blank. For entry blanks for which no data are obtained, enter UNK for Unknown, NA for Not Applicable, or ND for Not Done. To change an entry, draw a single line through it, add the correct information above it, and date and initial the change. For all forms, complete the following information:

1. Technical Area (TA). Two-digit number indicating the TA in which the sampling is being done or sample is being studied.

2. Operable Unit. Four-digit number indicating the Operable Unit in which the sampling is being done or sample is being studied.

3. Log Date and Time. The date and time when the measurement was made, in the following formats: DD-MMM-YY (e.g., 01-JAN-88) and the 24 hour clock time (e.g., 0837 for 8:37 a.m. and 1912 for 7:12 p.m.).

4. Sheet Number. Number all the sheets that are used for this activity, by day or by some practical unit.

5. Weather and Other Comments. Record all other conditions pertinent to the sample collection in this section on the Daily Activity Log in SOP-01.04.

6. Distance From Pumped Well (ft). Distance the observation well is from the pumping well in feet and tenths of feet.

7. Static Water Level (ft). Depth-to-water in feet and hundredths of feet in the observation well at the beginning of the pumping test.

8. Test End Date. The date when pumping ceased.

9. Test End Time. The time when pumping ceased.

10. Static Water Level (ft). Depth-to-water in feet and hundredths of feet in the observation well at the end of the pumping test.

11. Average Pumping Rate (gal/min). Total volume pumped (from totalizer meter) divided by the total elapsed time.

12. Measurement Methods. Type of instrument used to measure depth-to-water (may include steel tape, electric sounding probes, Stevens recorders, level heads, or pressure transducers).

UNCONTROLLED

DRAWDOWN TEST:

a. Elapsed Time (min). Time of measurement recorded continuously from time 0.00 (start of test) in minutes.

b. Depth-to-Water (ft). Depth-to-water in feet and hundredths of feet in the pump or observation well at the time of the water level measurement.

c. Pumping Rate (gal/min). Flow rate in gallons per minute of pumping measured from the in-line flow meter. This column should be completed only for the form used with the pumped well.

RECOVERY TEST:

a. Elapsed Time (min). Refer to the aforementioned DRAWDOWN TEST (a).

b. Depth-to-Water (ft). Refer to the aforementioned DRAWDOWN TEST (b).

UNCONTROLLED

Los Alamos National Laboratory **Environmental Restoration Program** Standard Operating Procedure	No: LANL-ER-SOP-09.01 Rev: 0

Thin Section Preparation

UNCONTROLLED

	(Print Name)	(Signature)	(Date)
Preparer:	DAVID A. MANN	[illegible]	9-5-91
Quality Review by:	DAVID BRETTON	David Bretton	9/5/91
Technical Review by:	A.W. Laughlin	AW Laughlin	9/5/91
Technical Review by:	Anthony R. Grieggs	Anthony R. Grieggs	9/11/91
QPPL Approval:	Karen L. Foster	Karen L Foster	11/7/91
PM Approval:	Robert W Vocke	Robert W Vocke	11/8/91

Effective Date: 3-16-92

THIN SECTION PREPARATION

1.0 PURPOSE

The purpose of this procedure is to document the process for the preparation of thin sections from rock samples. Thin sections are used for geological analysis on the microprobe, various microscopes, and for other geological analysis.

2.0 SCOPE

2.1 Applicability

This procedure covers any geologic thin sections prepared in Earth and Environmental Sciences (EES) Division for the Environmental Restoration program, and it is applicable to all personnel who prepare these sections.

2.2 Training

Any person producing thin sections must receive on-the-job training and must be skilled enough to produce thin sections that are acceptable for the intended use.

3.0 DEFINITIONS

A. Thin sections: For the purpose of this procedure, the term thin section will refer to standard petrographic thin sections, as well as grain mounts and fluid inclusion slides.

4.0 BACKGROUND AND/OR CAUTIONS

Preparation of thin sections requires a fine level of skill which cannot be completely described. Also, even a competent preparer may not always produce useable results. Therefore, the final determination of the quality of a thin section must be made by the requestor who decides if the thin section is suitable for the end use.

Of critical importance to this procedure is the accurate transference of sample identification to the thin sections. Samples are to be locked up during non-working hours. Also, all samples must be in locked storage when they are not being used. After thin sections are produced, the thin sections and all remaining sample material are to be returned to the requestor.

Be sure to refer to the appropriate Material Safety Data Sheet (MSDS) when working with the chemicals listed in Section 5.0, Equipment.

5.0 EQUIPMENT

See Attachment A, Equipment and Supplies Checklist, for a list of equipment required for this procedure.

UNCONTROLLED

6.0 PROCEDURE

A. The requestor submits samples for thin section preparation by completing the thin section request form (Attachment B). The request is entered into the thin-section laboratory log book.

B. Set samples (pre-numbered in ink) on the table in rows. Mark the sample number in an aluminum dish and on a bag. Use extreme care to mark the sample ID correctly. Set the bag under the rock and place the aluminum dish upside down on top of the rock. Do this for every rock sitting on the table.

C. At this point it must be decided if the sample needs to be impregnated to aid in its slabbing. This is a subjective decision made by the technician. If not, go on to D.

1. If the sample needs to be stabilized by impregnation, place it on top of a cookie sheet covered with aluminum foil.

2. Paint the surface of the rock completely with epon 815-diethylene triamine. Make sure the sample ID is still clearly legible. If not, write the ID in lead pencil on a piece of paper and attach the paper to the epoxy surface.

3. Allow the epoxy to cure before proceeding (24 hours at room temperature, 30-45 minutes in the oven).

D. Use appropriate slabbing saw to cut a slab 3/8 to 1/2 in. thick. Set the slab on top of the corresponding aluminum dish and put the excess material in the bag that has been pre-numbered. At this point, refer to the worksheet to determine whether to core each sample with the diamond core or cut them to chip size with the diamond saw. Use a round or rectangular slide to find the best area on the sample for the thin section. Trace around the pattern with a marking pen. Thin-sections are prepared in accordance with commonly accepted practices, such as those described in the reference.

7.0 REFERENCES

Logitech Machine System's Technology Manual for Thin Rock Section Production, 20 pp.

8.0 RECORDS

The records produced by this procedure are completed Thin Section Request Forms and entries into the Thin Section Laboratory Logbook.

UNCONTROLLED

9.0 ATTACHMENTS

A. Equipment and Supplies Checklist for Preparation of Thin Sections

B. Thin Section Request Form.

UNCONTROLLED

EQUIPMENT AND SUPPLIES CHECKLIST FOR PREPARATION OF THIN SECTIONS

Small supplies:

_____ Aluminum dishes

_____ Sample bags

_____ Cookie sheet

_____ Aluminum foil

_____ Round or rectangular slides

_____ Indelible marking pen

_____ Typewriter correction fluid

_____ Lead pencil with eraser

_____ 12" Forceps

_____ One 40-ml beaker, two 600-ml beakers, and two 150-ml beakers

_____ Pliers

_____ Glass stir rod

_____ Clean wipes

_____ Tongs

_____ Dial-caliper

_____ Probe or pick

_____ Razor blade

_____ Large tweezers

_____ "600" Glass plate

_____ Staining dish

UNCONTROLLED

EQUIPMENT AND SUPPLIES CHECKLIST FOR THIN SECTION PREPARATION (Continued)

_____ Rubber suction cup bent at 90 degree angle

_____ Back drop mounting plate

_____ Microscope cover glass (or cover slips)

_____ 1-inch round ring mold.

Large Equipment:

_____ Slabbing saw

_____ 8" or 10" diamond saw

_____ Diamond core drill press

_____ Oven

_____ Vacuum Chamber

_____ High- and low-speed lap with 100 mesh plate and 1, 3, 6, 30, 40, and 45 micron plates

_____ Hot plate

_____ Logitech (LP 30) with 1/4-inch rubber and 1-inch thick piece of foam

_____ Dial-o-gram balance with disposo weigh boat

_____ Ultrasonic cleaner

_____ Air blower

_____ Electric engraver

_____ Ingram thin-section cutoff saw

_____ Ingram grinder

_____ Petrographic microscope

_____ Dust chaser.

UNCONTROLLED

EQUIPMENT AND SUPPLIES CHECKLIST FOR THIN SECTION PREPARATION (Concluded)

Chemicals:

_____ Epon 815-diethylene triamine

_____ Shell epoxy

_____ Buehler epoxy

_____ Aluminum oxide (1200 grit)

_____ Kerosene

_____ Pella oil

_____ Silicone carbide (600 grit)

_____ Isopropyl or ethyl 190 alcohol

_____ Distilled water

_____ Sodium-cobaltinitrite powder

_____ Isopropanol

_____ Hydrofluoric acid

_____ Tap water

_____ Barium chloride

_____ Methanol (MeOH)

_____ Amaranth powder

_____ Diamond paste (1, 3, and 6 micron)

_____ 6 micron diamond spray

_____ Diamond Polishing Extender (mixture of propolenegycol and isopropanol)

_____ Duro Super Glue.

UNCONTROLLED

THIN SECTION REQUEST FORM

LOS ALAMOS NATIONAL LABORATORY
ENVIRONMENTAL RESTORATION
THIN SECTION REQUEST FORM

Sheet _____ of _____

Site Work Plan _____

Technical Area _____

Inclusive Sample Identifiers:

Operable Unit _____

_____ to _____

Signature: _____ Date: _____

Date Submitted _____

Priority (check one):

_____ 1 Day
_____ 3 Days
_____ 2 Weeks
_____ Space Available

Number of Samples _____

I. TYPE OF MOUNT (check one):

___ Glass Rectangular ___ Glass Round ___ Epoxy Casting
___ Silica Rectangular ___ Silica Round ___ Probe Standard

II. THICKNESS REQUIRED (check one):

___ Unlimited ___ 150 µ ___ 30 µ

III. POLISHING REQUIRED (check one):

___ None, ___ Polished on Bottom Side, ___ Polished on Top Side, ___ Polished on Both Sides

IV. SPECIAL INSTRUCTIONS

_____

_____

_____

V. SAMPLE NUMBER

_____	_____	_____	_____
_____	_____	_____	_____
_____	_____	_____	_____
_____	_____	_____	_____
_____	_____	_____	_____
_____	_____	_____	_____

SAMPLE LOG SHEET

Samples received in Sample Prep Lab _____ Signature _____ Date

Samples distributed to _____ Signature _____ Date

❑ CHECK HERE IF INFORMATION IS RECORDED ON BACK OF FORM

ER-SOP-09.01, R0, 4/91

UNCONTROLLED
EXAMPLE
CONTACT THE PROGRAM OFFICE FOR MASTER FORMS

Los Alamos National Laboratory **Environmental Restoration Program** Standard Operating Procedure	No: LANL-ER-SOP-9.02	Rev: 0

Operating the Microprobe

	(Print Name)	(Signature)	(Date)
Prepared by	Marjorie G. Snow	M G Snow	2-3-92
Quality Review by	Larry Maassen	Larry Maassen	2/14/92
Technical Review by	A.W. Laughlin	A.W. Laughlin	2/7/92
PM Approval	Robert W Vocke	Robert W Vocke	3-4-92
QPPL Approval	Karen L Warthen	Karen L Warthen	3/4/92

Effective Date: 3-16-92

UNCONTROLLED

Operating the Microprobe

Table of Contents

1.0 PURPOSE 2

2.0 SCOPE 2
- 2.1 Applicability 2
- 2.2 Training 2

3.0 DEFINITIONS AND/OR ABBREVIATIONS 2

4.0 BACKGROUND AND/OR CAUTIONS 3

5.0 EQUIPMENT 3

6.0 PROCEDURE 4
- 6.1 Sample Preparation 4
- 6.2 Microprobe Start-up 4
- 6.3 Boot computer 5
- 6.4 Saturating the Filament 6
- 6.5 Quantitative Standard Analysis 7
- 6.6 Quantitative Unknown Analysis 11
- 6.8 Shut Down of Microprobe 12
- 6.9 Instrument Calibration 13
  - 6.9.1 EDS Gain and Resolution 13
  - 6.9.2 Faraday Cup 13
- 6.10 Acceptance/Rejection Criteria 14

7.0 REFERENCES 14

8.0 RECORDS 15

9.0 ATTACHMENTS 15

UNCONTROLLED

Operating the Microprobe

1.0 PURPOSE

This procedure provides instructions for the operation of the Cameca MBX Electron Microprobe and Tracor Northern (TN) Series II X-ray Analyzer.

2.0 SCOPE

2.1 Applicability

This procedure applies to electron microprobe analyses of geologic specimens and other materials documented as Los Alamos Environmental Restoration (ER) Program samples using the Cameca MBX Electron Microprobe and TN Series II X-ray Analyzer.

2.2 Training

Training for operators consists of reading and applying this procedure and the instruction manuals for the Cameca MBX Microprobe, SANDIA TASK8 Automation System and Tracor Northern Series II X-ray Analyzer. Additionally, operators receive training through hands-on operation of the equipment under the supervision of the machine custodian. The training is recorded by the machine custodian in the ER EMP System Logbook and in the operator's personnel file.

UNCONTROLLED

3.0 DEFINITIONS AND/OR ABBREVIATIONS

A. TN: Tracor Northern (now Noran Instruments, Inc.)

B. EDS: Energy Dispersive Spectrometer

C. WDS: Wavelength Dispersive System

D. EMP: Electron Microprobe

E. EMP System: Combined Cameca MBX Electron Microprobe & Series II X-ray Analyzer System.

F. SANDIA TASK8: A Subroutined Electron Microprobe Automation System.

G. BA: An empirical matrix correction program used specifically for oxide minerals. Refer to B85: A Bence-Albee Oxide Analysis Program with Mineral Code Capabilities.

H. PRZ: A quantitative matrix correction technique based on the depth distribution of X-ray production. Refer to PRZ85: A Subroutined Quantitative Analysis Correction Procedure Using the Bastin q(rz) Technique

4.0 BACKGROUND AND/OR CAUTIONS

The basic principle of the Electron Microprobe is the generation of a highly focused beam of electrons which strike and interact with the constituent elements of the target specimen. These interactions produce characteristic x-rays which are then detected by wavelength and energy dispersive spectrometers. The intensity of each x-ray is proportional to the concentration of the element present. Through comparison of the corrected X-ray intensity from each element to those from specimens of known concentration, unknown compositions may be quantitatively determined.

It is the responsibility of the machine custodian to perform the routine maintenance of the system including: system software and electronically-stored system back-ups; calibration of EDS gain; EDS resolution check; Faraday Cup check; instruction of the operators in the use of the system; and certification of operators for this procedure. The machine custodian may delegate responsibilities documenting any delegation in the ER EMP System logbooks.

Operators are responsible for calibration of semi-quantitative and quantitative analytical routines used in their particular data acquisitions. The Operator must ascertain that all EMP systems are operational before an investigator begins a microanalysis session. The Operator determines acceptance or rejection of data generated by the Electron Microprobe analysis routines. The Operator also is responsible for the proper storage and disposition of hard copy and magnetic media data records, and disposition and/or storage of samples and materials. Acceptance criteria will be entered on the Daily Activi. Log (SOP-01.04). Deviations from this procedure must be documented by the responsible Investigator on the Daily Activity Log.

Malfunction of the EMP System should be readily detectable by operators during analysis of standards. If the operator is uncertain, he/she may consult with the machine custodian. If the EMP vacuum system is not sufficient to allow operation, consult with the machine custodian.

Normal interior building temperature and humidity are acceptable for the operation of the EMP System. Cooling water for the EMP diffusion vacuum pump is supplied by a chilled water system maintained in the range of 40° to 70°F. Ambient air temperature for the EMP System should range between 60° and 80°F. Operators should take extra precaution to ensure the instrument maintains calibration by checking standards more frequently when environmental conditions are out of range.

5.0 EQUIPMENT

- The Electron Microprobe is a Cameca Model MBX (purchase date 1976). Refer to the Cameca Operating Manuals for description of this system.

- The X-Ray Analyzer is a Tracor Northern Series II X-Ray Analyzer (purchase date August 1988). Refer to the Tracor Northern Operator's Manual for this system.

UNCONTROLLED

- EMP System software is commercially acquired software that includes Sandia Task 8 and the TN Series II X-ray Analyzer Software. Both software packages operate under the "FLEX" operating system, manufactured by Noran Instruments (formerly Tracor Northern Instruments). Software upgrades are received as releases directly from the software manufacturers.

6.0 PROCEDURE

Certified standards should be used for calibration of quantitative x-ray analysis routines. Operators may use other standards for specific applications but must document the basis for usage of these standards on the Daily Activity Log.

Data consist of elemental information which is printed following each analysis. Paper hard copy contains the sample identifier cross referenced to the operator's ER sample number in their own ER notebook. Elemental information is also stored on magnetic media for retrieval at a later date.

6.1 Sample Preparation

Samples to be examined in the EMP System must be in a form or size that can be attached to an EMP sample mount and inserted into the EMP sample chamber. Before being placed in the EMP System, all non-conductive samples must be given an electrically conductive carbon coating. Conductive samples may not require coating. The operator will determine if a conductive coating is appropriate. Carbon coating procedures are obtained in the Instruction Manual, Ladd Vacuum Evaporator.

Sample identification and control are described in SOP-1.04, Sample Control and Documentation. If it is not practical to place entire ER sample identification number on the sample mount, an abbreviated number may be placed on the mount, but the abbreviated number must be keyed to the full number in the operator's ER notebook.

6.2 Microprobe Start-up

6.2.1. The microprobe is in Stand-by condition after shut down at the end of the previous work day.

6.2.2. Fill the liquid nitrogen cold trap. Refill it in approximately 30 minutes; then every four hours.

6.2.3. If it is not already on, turn on the TN Series II monitor power switch located on far lower right side of the monitor console, next to the contrast dial. Turn contrast up to acceptable level.

UNCONTROLLED

6.2.4. Turn on the TV camera adaptor located below the TV monitor. Turn on the TV monitor.

6.2.5. Turn on the Light Microscope Illuminator by pushing in the Illuminator button. Switch the toggle below it to High.

6.2.6. Position the white toggle switch located on the column above the stage indicators to reflected light. (Up is reflected light , middle is off, and down is transmitted light.)

6.2.7. Activate the Vacuum System by switching the toggle on the left front of the vacuum chassis to OPERATE.

6.2.8. Verify that the vacuum system has achieved suitable vacuum (less than 5 x 10^{-5} torr) as read from the secondary gauge position of the vacuum gauge and the Secondary Vacuum light is now on. If the secondary vacuum light does not come on consult with the machine custodian.

6.2.9. Verify that the program TASK8 is running by looking for the "TASK8": prompt at the bottom of the TN Series II monitor. If the prompt is correct proceed to step 6.4. If the prompt is not correct, type X 'TASK' (CR). If the prompt is now correct proceed to step 6.4, If it is still not correct continue in sequence and boot the computer.

UNCONTROLLED

6.3. Boot computer

6.3.1. Press the Reset switch located just below the Power switch on the TN Series II console (just to the right of diskette drives 5 and 6) and step through the following sequence of inputs.

- (prompt on the printer) "28"
  (prompt on the printer, sometimes absent)"START"
- If the "28" prompt does not appear turn the computer power switch (above the Reset) Off; wait 5 minutes then turn it back on and start section 6.3.1 again. If it still does not boot correctly, consult with the machine custodian.
- (type) DL (CR)
- Wait for all the Program section softkeys to light up and then turn off. The TN logo will appear on the monitor screen.
- Press the PROGRAM soft key (Program section of the soft-key board).
- Select the LOAD FLEXTRAN option (option 0 will be highlighted when 0 is typed) and (CR).
- (prompt) "SETUP COMPLETE", type (CR).
- Press the RUN soft key
- When the asterisk (*) prompt appears, (type) X 'START' (CR)
- (prompt) "SKIP RAM DISK INITIALIZATION (Y/N)?"
- (type) N (CR).

6.3.2. The system will take about two minutes to initialize the RAM and load libraries, system files, and general subroutines. It will then display these messages:

- "(Current date and time) Ram disk initialized"
- "Position paper to the tear-off point and then hit the space bar". Do so.
- "Use CONFIG file (CR or new #) 4000 ?"
- (type)(CR). (Configuration file 4000 is set up to use an accelerating potential of 15 KeV. This is an optimum setting for most samples; sulfides however may require 20 KeV accelerating voltage. If another accelerating voltage is required consult with machine custodian. If the operator chooses to use another accelerating voltage, it must be documented in the operators ER notebook.)

6.3.3. The program will then display the current spectrometer and stage positions and ask "OK(Y/N)?". The current stage idle position (referred to as Standard Focus or Sta Fo) is posted beside the BMP and all spectrometers are parked at .50 (sine theta) overnight. Check the mechanical indicators on the stage and spectrometers and determine if the readouts are approximately the same as those listed. If the values are approximately the same, type (CR) and proceed to step 6.4. If the values are not similar, type N (CR) and continue with this sequence.

6.3.4. If a 'N (CR)' is entered, the computer will read out each one of the LED displays in the following order: X axis, Y axis, Z axis, spectrometer 1, spectrometer 2, spectrometer 3, and spectrometer 4. As each axis is listed, if the LED and the mechanical indicators agree then type a (CR). If they do not agree, type in the value as read from the mechanical indicators and then type a (CR).

6.3.5. After listing spectrometer 4, the computer will again type out all values and ask if "OK(Y/N)?". If the positions are now correct type a (CR) and continue to 6.4. If the positions are not correct type N (CR) and repeat the above step until they are correct.

6.3.6. The computer will now auto-load standard and element tables, look for the next free data file (on the operator's personal diskette) and then display the TASK8: prompt.

6.4 Saturating the Filament

6.4.1. Verify that the Secondary Vacuum LED is now on. If it is not, verify that the vacuum reading on the secondary gauge is less than 5×10^{-5} torr and press the silver reset button. The Secondary Vacuum LED should then come on. If the Secondary Vacuum LED does not come on, consult with machine custodian.

UNCONTROLLED

6.4.2. Type GET STA THO (CR). This will move the stage to the thorium standard and allow the Investigator to see the beam when it is turned on. Use the Z axis on the joystick to focus on the thorium standard.

6.4.3. Type D B-1 (CR). This will release computer control of the filament circuit.

6.4.4. Turn the Absorbed Current Range Selector to 3×10^{-8} ampere.

6.4.5. Push in Filament Power Supply Button .

6.4.6. Saturate the filament in the following manner: Slowly turn the Filament Temperature Knob clockwise to about 4 to 8. Watch the Absorbed Current Meter. The meter will read a fast rise in signal and then level out. The object is to peak the filament temperature just into the level out, or plateau area. Verify that the beam is visible on the thorium standard via the TV monitor. Select the largest square on the Raster Size Control Panel. Wait 15 minutes before proceeding to the next step; this will allow the beam to stabilize.

6.4.7. Type D B 15 (CR). This will allow the computer to define the beam to fifteen nanoamperes, the most commonly used beam current and then blank the beam. However, the Investigator may choose the appropriate beam current and note it in the investigator's ER logbook.

6.4.8. Type UNB (CR). This will unblank the defined beam and allow viewing.

6.4.9. Press the Spot Raster Size Control button.

6.4.10. Use Lens 3 to make the spot as small as possible.

6.4.11. Use the Z axis on the joystick control to recheck the focus.

6.4.12. Center the beam raster on the TV Monitor crosshairs by turning the two Optical Microscope Adjuster Knobs. The adjuster knobs are located at the base of the column in the 'vee' created by the column and spectrometers 1 and 4.

6.4.13. Press the large square of the Raster Size Control.

6.4.14. Type BL (CR). This will blank the beam

6.5 Quantitative Standard Analysis

6.5.1. Insert the Certified Operator's personal disk into drive 5 (if not already there).

UNCONTROLLED

6.5.2. If a catalogue of the disk is desired, type CAT (CR). When prompted "Device #", enter the number of the disk drive (5) (CR), and (CR) again to list all of the disk contents. Note the last data file used and the next unused file on a piece of scratch paper.

6.5.3. The Certified Operator will select a Primary standard or group of standards from a standards list. The selected standard(s) should be similar chemically (e.g., carbonate, oxide, or silicate) to the unknown being analyzed. If a Primary standard is not available for a particular element the Certified Operator will select another standard and document the basis for usage in his/her ER notebook.

6.5.4. Type GET STA XXXX (CR), (where XXXX is the one to four character label of the selected standard). This will move the stage to the selected standard. Focus using the Z axis control on the joystick and if necessary manually drive onto the standard.

6.5.5. If analyzing oxide phases continue with this sequence. In this context, any mineral containing oxygen is considered to be an oxide phase. If analyzing non-oxide phases proceed to section 6.5.7.

6.5.6. Type Q BA (CR) for analysis of oxide phases. When prompted for the BA Definition File number, enter 110 for a generic Definition File that utilizes the Bence-Albee routine with mineral codes or enter the file number of the Certified Operators own previously set-up file. (Refer to "BA85: A Bence-Albee Oxide Analysis Routine with Mineral Code Capabilities" for information on setting up analysis-specific mineral codes. Refer to "Sandia Task8C" for information on setting up a Definition File for an analysis routine that does not access the mineral code routines). Proceed to section 6.6.8.

6.5.7. To perform analysis of non-oxide phases (e.g., the sulfides), the PRZ matrix correction program must be used. Type LOAD ELEMENT 112 (CR) to load an element table containing PRZ correction factors. Then type Q PRZ (CR). Refer to "SANDIA TASK8C" for information on how to set up a PRZ definition file and then, by following the prompts, create a definition file appropriate to analyze the desired elements. Continue in this sequence.

6.5.8. The file settings will be printed and the computer will ask if "OK(Y/N)?". Check to determine that the settings are appropriate. If the file is correct type a Y (CR). If the file does not meet the analysis requirements type a N (CR) and follow the prompts to correct the file. When prompted again "OK(Y/N?" type a Y (CR) or repeat this step to further correct the file.

6.5.9. When prompted for the Setup file number, enter 1 (CR). The file settings for Page 1 of the Set-up file will be printed. Check that the printed settings meet the analysis requirements and then press the Cancel key. If they do not meet the analysis requirements, highlight the parameter to be changed and

UNCONTROLLED

type in the correct value. When correct, press the Cancel key. Follow the same procedure for Page 2 of the Set-up file and then when asked, "OK(Y/N)?" type Y (CR).

6.5.10. When prompted "SET-UP FILE #1 OK(Y/N)?" type Y (CR).

6.5.11. When prompted "BEAM SIZE, µM?" type the beam size selected: spot = (approximately) 1 µm (diameter), small square = (approximately) 5 µm (diameter), large square = (approximately) 17 µm (diameter).

6.5.12. When prompted "PRINTER LABEL" type the ER sample number or an identifier for the sample or group of samples to be analyzed and (CR). The Certified Operator will cross-reference any analysis identifiers to the ER sample numbers in his/her ER notebook.

6.5.13. When prompted "ANALYST", the Certified Operator will type his or her complete last name and a (CR).

6.5.14. When prompted "RESERVE FILE SPACE FOR 48 PTS (NEW # OR CR)?" type the estimated number of analyses desired from this sample and (CR).

6.5.15. At the prompt "1 FILES ARE REQUIRED. START AT #?(NEW OR CR)?" type the next unused file number as noted in step 6.5.2. and (CR). (The ? will be the next unused file number as stored from Section 6.5.2.

6.5.16. At the prompt "DISK LABEL" check that the correct sample identifier is listed (as entered in section 6.5.12): if correct type a (CR); if incorrect type N (CR) and, when prompted, type the correct sample identifier.

6.5.17. The computer will now open the file on the Certified Operator's disk, and print the available mineral codes if accessing a mineral code routine. When the system is ready to perform an analysis it will prompt; "<WHITE> = WDS, <RED> = EDS, B=BLANK, U=UNBLANK, <CNTRL-G> = END" Pressing the white button will start a WDS analysis; pressing the red button will start an EDS acquisition, and typing a control-G will close the QUANT routine and return to the main TASK program.

6.5.18. Check that the standard you wish to analyze is in focus optically on the TV monitor and then press the white joystick button.

6.5.19. If using BA Definition file 110, the computer will ask "ENTER THE MINERAL CODE:". Type the three letter mineral code of your choice (see 6.5.17) and (CR).

6.5.20. If a Bence-Albee routine is being used, when the analysis is complete the computer will prompt "SAVE THIS ANALYSIS (Y/N)?". The Certified Operator will verify that the results are within acceptable limits of the listr

UNCONTROLLED

values for the standard analyzed. It is the Certified Operator's responsibility to define his or her acceptance criteria, however, if the calculated value is within ± two sigma (the error printed to the right of the calculated weight percent is one sigma) of the listed values then the analysis is generally considered acceptable. If the above prompt is answered with a Y (CR), then the computer will prompt for a "TAG" for this point. The Operator may enter an identifying tag composed of a maximum of 23 characters. Caution: use no spaces or commas. (If the PRZ routine is used there will be no save/reject or tag option-all points will go to disk).

6.5.21. If, in the Certified Operator's judgement, one or more elements are not in calibration, then type a period (.) to return to the TASK prompt and calibrate. Individual elements are calibrated by typing (at the TASK8: prompt) "CAL XXX" (where XXX stands for the reference element, e.g.,. Si1) and (CR). The stage will drive to the selected standard coordinates and prompt the operator "HIT JOYSTICK #1 WHEN READY". Select a spot for calibration, focus optically, and push the white button on the joystick box.

6.5.22. Following calibration of one or more elements, standards should be re-run to assess the new calibration. If the Certified Operator deems the EMP system to be in calibration then he/she should type, (at the TASK8: prompt), SAV EL 110 (CR) or the number of the element table currently being used. This will save the current calibration to disk. Answer the following question prompts.

- "110 MULTIREF BA (DATE LAST SAVED) OK?" The question is asking if you intend to write over the old file.
- If your answer is yes, type (CR). This will update the calibration on disk.
- When prompted by the program, "ENTER LABEL," type 110 MULTIREF BA, (or the number of the element table being used), the current date, and then a (CR).
- If you intend to store the current calibration under a new file number type N (CR) and, when prompted, type the new file number. The computer will check to determine if the new number is used. If not, a title will be requested. The title is limited to 23 characters. Use your last name, some identifier mnemonic, and the date. If the new number is already used consult with machine custodian for an unused file number.

6.5.23. When the Certified Operator deems the system to be calibrated then analysis results from the appropriate standards must be stored on disk and analysis of ER samples may proceed.

6.5.24. The Certified Operator may type a period (.) with no (CR) and return to the TASK prompt for execution of any one TASK command. At the completion of the TASK command there will be no prompt and the system will wait for a joystick button to be pressed (i.e. initiate a quantitative or qualitative

UNCONTROLLED

analysis) or for another period (.) to be typed. Refer to "SANDIA TASK8C" for more information regarding TASK commands.

6.6 Quantitative Unknown Analysis

6.6.1. Once appropriate standards have been run and the EMP System is deemed calibrated then an unknown sample may be analyzed. The following commands may be issues from 'within' a Quant routine by typing the period (.) for execution of one TASK command, or the Quant file may be closed out (control-G) and another fill opened for the unknown sample.

6.6.2. To insert a sample into the EMP for analysis, first ascertain that there is no sample currently resident in the EMP. Look at the position of the sample shuttle handle: if it is in the 3:00 o'clock position there is probably a sample in the chamber. If there appears to be a sample in the EMP refer to 6.7. If the shuttle handle is in the 12:00 o'clock position continue with this sequence.

6.6.3. Type CH (CR) (or if "within" a Quant routine, type period (.), wait for the TASK8: prompt, then type CH (CR)). This will move the stage to the sample change coordinates. Before proceeding compare the mechanical stage indicator positions with the sample change positions posted on the EMP. If the mechanical indicators are not correct, use the joystick to drive to the correct coordinates. Load the sample in the sample holder and screw the holder into the airlock with the handle in the 12 o'clock position.

6.6.4. Press the Pump-Down button and wait for the Valve Driving LED to come on. (If it does not come on consult with machine custodian.)

6.6.5. Once the Valve Driving LED is on, open the airlock lever counter-clockwise. While keeping the shuttle handle in the 12:00 o'clock position, push the shuttle handle all the way in, and then turn the shuttle handle to the right 90 degrees to the 3 o'clock position. Pull the shuttle handle out, still in the 3 o'clock position.

6.6.6. Close the airlock valve by rotating the airlock lever clockwise.

6.6.7. Press the Air Inlet button and wait about 3 seconds. Press the Off button.

6.6.8. Type a period (.) and wait for the TASK8: prompt. Then type GET POINT 46 (CR). This will move the stage to the approximate center of the thin section holder.

6.6.9. Analyze the unknown sample following sections 6.5.5-6.5.24 if opening a new file, or section 6.5.18-6.5.24 if using an existing file.

UNCONTROLLED

6.6.10. Standards should be run several times throughout an analysis session or whenever the Certified Operator questions the validity of an analysis.

6.7 Changing Samples

6.7.1. Type a period (.) and wait for the TASK8: prompt. Then type CH (CR). The stage will move to the sample change coordinates.

6.7.2. Verify that the mechanical indicators match the sample change coordinates listed in the microprobe logbook. If they do not, use the joystick controls to drive to the change coordinates.

6.7.3. Press the Airlock Pump Down button.

6.7.4. Wait until the valve driving LED is on.

6.7.5. Open the Airlock valve by rotating the airlock lever counter-clockwise.

6.7.6. Insert shuttle handle with the handle in the 3 o'clock position and when in completely, rotate the handle counter clockwise to the 12 o'clock position.

6.7.7. Pull the sample holder handle out.

6.7.8. Close the Airlock valve by rotating the airlock lever clockwise.

6.7.9. Press the Air Inlet button and wait 3 seconds.

6.7.10. Press the Off button.

6.7.11. Unscrew the sample holder from the Airlock.

6.7.12. Change sample holders.

6.7.13. Screw the sample holder back into the Airlock

6.7.14. Repeat steps 6.7.3 to 6.7.8.

6.8 Shut Down of Microprobe

6.8.1. Remove the thin section from probe following steps in section 6.7.

6.8.2. If still in a QUANT routine, terminate it by typing CONTROL-G.

6.8.3. Put the probe in an idle mode.

6.8.3.1. Type LOA SCHED 10 (CR). This will load schedule 10 and return the TASK8: prompt.

UNCONTROLLED

6.8.3.2. Type RUN BYBY (CR). This schedule will drive each spectrometer to a safe position (.50), and park it there, position the stage to the STANDARD FOCUS, and release the beam to an unregulated mode.

6.8.3.3. Wait until the absorbed current meter indicates the beam is on and then turn the Filament Temperature knob gently counter-clockwise to zero.

6.8.3.4. Release the Filament Power Supply button.

6.8.3.5. Turn off the TV camera adaptor.

6.8.3.6. Turn off the power switch on the TV Monitor.

6.8.3.7. Release the Light Microscope Illuminator button and toggle the switch below it to low.

6.8.3.8. Deactivate the High Vacuum System by flipping the toggle switch on the left front of the Vacuum Chassis to STANDBY.

6.8.3.9. Remove your floppy disk or diskette and place it in the storage box.

6.8.3.10. Power down the SyQuest if it is in use.

6.8.3.11. Turn the TN Monitor contrast down to the minimum.

UNCONTROLLED

6.9 Instrument Calibration

6.9.1 EDS Gain and Resolution

The gain on the EMP System EDS will be checked annually by following the energy calibration instructions in the Series II X-Ray Analyzer Operator's Manuals using copper energy lines. Tolerance is ± 20 eV. If the grain is out of tolerance, it will be the machine custodian's responsibility to calibrate it by running the gain calibration program as described in the Tracor Northern Manual. The resolution of the Series II EDS will be checked annually by measuring the full width at half maximum of the K alpha line from manganese. This is a check only for degradation of the detector; no calibration or adjustment is made.

6.9.2 Faraday Cup

The machine custodian will check the accuracy of the Faraday Cup annually with a 1.34 volt Mercury battery current source (1.34 volts is a physical constant for a Mercury battery). Acceptable values are 9.95×10^{-9} amperes, $\pm 1 \times 10^{-9}$ amperes. If the accuracy of the Faraday Cup is out of tolerance, it will be the machine custodian's responsibility to affix a tag stating "DO NOT USE" to the instrument and to repair the instrument so that it will be within the required tolerance (refer to Section 6.6 and 6.7 of TWS-QAS-QP-12.1).

6.10 Acceptance/Rejection Criteria

Quantitative X-ray analytical data must have acceptance limits set by operators. Some potential sources of uncertainty will be revealed by the inability to achieve an acceptable calibration as evidenced by running the certified standards as unknowns and comparing the calculated values to the listed standard values. Operators will accept or reject all quantitative data based on analyses of certified standards.

Special research needs may require deviations from this procedure. The operator must document any deviations in his/her ER logbook.

Following completion of EMP analytical investigation, samples will either be maintained in the custody of the Investigator or returned or to the permanent sample storage room. Use the Chain-of-Custody/Request for Analysis form in SOP-01.04 to document custody and sample traceability.

UNCONTROLLED

7.0 REFERENCES

Documents referenced in this procedure are:

LANL-ER-SOP Section 1.0, General Instructions

LANL-ER-SOP-09-09, Certification of Standards for Electron Microanalysis

Cameca Model MBX Electron Probe/SEM Description, Use, Maintenance Manual, Cameca Instruments, Inc. Stanford, Connecticut

Series II X-Ray Analyzer Operator's Manuals, Noran Instruments, Inc. (formerly Tracor Northern, Inc.), Middleton, Wisconsin

Instruction Manual, Ladd Vacuum Evaporator, cat. no. 30000, 27 pgs. Ladd Research Industries, Inc., Burlington, Vermont

BA85: A Bence-Albee Oxide Analysis Routine with Mineral Code Capabilities, Sandia Report SAND90-1702

PRZ85: A Subroutined Quantitative Analysis Correction Procedure using the Bastin q(rz) Technique. RFP 3215

SANDIA TASK8: A Subroutined Electron Microprobe Automation system, Sandia Report 2037, 1985

CONFIG8 A Configuration File Generator for SANDIA TASK8, Sandia Report 2035,1985

The following procedure is from the Los Alamos National Laboratory Yucca Mountain Project Quality Assurance Manual in effect April, 1990.

TWS-ESS-DP-122, Preparation of Electron Microprobe Standard Mounts

UNCONTROLLED

8.0 RECORDS

8.1. Certified Operators record the following information in their ER notebooks: the ER sample number (cross-referenced to the sample identifiers used during analysis sessions), date, relevant instrument working parameters, any data files generated, records of standards used to calibrate elemental analyses, acceptance criteria, deviations, and additional information appropriate to interpreting results and to reproducing analyses. The Certified Operator will retain all printed output form analytical sessions with the EMP System.

8.2. The floppy disks and/or diskettes assigned to the Certified Operator are temporary storage for analytical data and will be kept in the EMP System room. It will be the Certified Operator's responsibility to edit, archive, and/or delete these files as needed.

8.3. All ER EMP System microanalysis data will be archived in a database on magnetic media.

8.4. The results of gain calibration, and Faraday cup and resolution checks, date, and name of the person performing the calibration and checks will be recorded in the ER EMP System logbook. A sticker will be placed on the Series II X-ray Analyzer console.

8.5. LANL notebooks, logbooks, EMP System data output, and other records are controlled in accordance with the procedures in Section 1.0, General Instructions.

9.0 ATTACHMENTS

N/A

Los Alamos National Laboratory **Environmental Restoration Program** Standard Operating Procedure	No: LANL-ER-SOP-09.03 Rev: 0

Operation of Siemens X-Ray Diffractometer

UNCONTROLLED

	(Print Name)	(Signature)	(Date)
Preparer:	David L. Bish	David L. Bish	8/26/91
Quality Review by:	DAVID BROXTON	David Broxton	8/27/91
Technical Review by:	A.W. Laughlin	AW Laughlin	8/27/91
QPPL Approval:	Larry Maassen	Larry Maassen	8/30/91
PM Approval:	Robert W Vocke	Robert W Vocke	8/30/91

Effective Date: 3-14-92

OPERATION OF SIEMENS X-RAY DIFFRACTOMETER

1.0 PURPOSE

The purpose of this procedure is to describe the methods, procedures, and documentation used to obtain X-ray powder diffraction data from the Siemens D- 500 X-ray powder diffractometers.

2.0 SCOPE

2.1 Applicability

This procedure applies to all personnel who are conducting ambient and controlled-temperature or atmosphere X-ray diffraction analysis of any rock or mineral for the Environmental Restoration (ER) program using the Siemens D-500 X-ray powder diffractometers.

2.2 Training

Los Alamos National Laboratory policy requires that all persons using this equipment have completed the Laboratory analytical X-ray safety class within the required time period, and be trained by the machine custodian on the proper operation of the equipment, safety features, and emergency procedures. All personnel using this procedure must document that they have read and understood this procedure, and the seven procedures in Section 1.0, General Instructions.

UNCONTROLLED

3.0 DEFINITIONS

Machine Custodian: The person who is in charge of an instrument and is responsible for the maintenance and safety of the instrument. This person's name shall be posted on the front of the diffractometers.

4.0 BACKGROUND AND/OR CAUTIONS

4.1 Principle X-ray diffraction is a method by which investigators can identify the minerals present in a rock and obtain quantitative information on their abundances and physical properties.

4.2 Malfunctions of the equipment are readily apparent. For the diffractometers, one either obtains counts or no counts. Failure of the TTK and ITC4 units during controlled temperature runs is readily apparent by monitoring the sample temperature displayed on the ITC4 controller.

4.3 The diffractometers produce ionizing radiation using high voltage sources. However, the diffractometers are interlocked such that if the panels are all in place, risk to the operator is almost non-existent.

4.4 Only two possibilities (rare) for data corruption exist: 1) loss of X-ray flux; 2) occurrence of noise spike. The first problem can be identified by the lack of any diffracted intensity, i.e., counts = 0. Such data should be discarded. The occurrence of the second possibility can be noted by "peaks" only one 2θ step wide. Such data are generally usable and only need to be discarded when a noise spike overlaps on an important peak.

4.5 During a variable-temperature X-ray run, data shall be rejected if, after a run is completed and the TTK attachment is opened, the sample is found to have fallen or blown (due to vacuum) out of the sample holder.

4.6 The dated entry on the Daily Activity Log (see SOP-01.04), for each X-ray run shall constitute evidence that the procedure has been implemented and satisfactorily accomplished for the X-ray run.

UNCONTROLLED

5.0 EQUIPMENT

- Siemens D500 X-Ray Powder Diffractometers
- DIFFRAC5000 - Siemens Commercial X-Ray Data Package
- Anton Paar TTK Temperature Attachment. (This attachment is capable of controlling the sample temperature between liquid nitrogen (- 195.8°C) and ~300°C under a vacuum)
- Oxford Instruments ITC4 Temperature Controller
- Roughing Vacuum Pump

6.0 PROCEDURE

The machine custodian is responsible for both alignment and calibration of the diffractometers and the training of any potential users of the diffractometers. The principal investigator (PI) has the responsibility to assure correct implementation of this procedure for ER work. The PI may delegate performance of the procedure to any properly trained and certified individual.

6.1 Calibration

For Alignment and calibration, see Calibration and Alignment of the Siemens Diffractometers, SOP-09.04. Temperature calibration of the TTK attachment shall be performed at several temperatures, preferably at liquid nitrogen temperature and in boiling water, as outlined in reference D. Calibration of the sample temperature may be performed using an independent temperature measuring device such as the thermocouple probe operated in accordance with TWS-EES-DP-105, Thermal Calibration Procedure or using known melting point(s) of a crystalline phase.

6.2 Control of Samples

6.2.1 Samples will be tracked, stored, shipped, and handled in accordance with the procedure for Sample Identification and Control for Mineralogy-Petrology Studies, (see reference H2), SOP-01.03, Handling, Packaging, and Shipping Samples, and SOP-01.04, Sample Control and Field Documentation. Great care shall be exercised to label all X-ray runs with correct sample name, checking sample output against names on the sample bottles.

6.3 Diffractometer Operation

6.3.1 Turn on diffractometer as outlined in the operating instructions (Ref A).

6.3.2 Insert sample and turn on X-rays either by pressing the shutter-open button or by placing shutter in automatic mode.

6.3.3 The instrument is operated and data analyses conducted using the Siemens software package, DIFFRAC5000. Refer to the DIFFRAC5000 users manual (Ref B).

6.3.4 If the samples are to be X-rayed at variable temperatures using the Anton Paar TTK attachment, the TTK attachment is operated and maintained as outlined in the TTK instruction manual (Ref C), and the Oxford ITC4 temperature controller is operated as outlined in the ITC4 Operators Manual (Ref D)

6.4 System Shut-Down

The diffractometer is shut-down in accordance with the instruction manual (Ref A).

6.5 Data Analysis

6.5.1 The data are regressed and displayed using the Siemens DIFFRAC5000 software package.

6.5.2 Crystalline phases are identified by comparing their patterns with patterns of pure standards, patterns from the JCPDS files (Ref E, F, G), or with calculated patterns.

6.5.3 Quantitative X-ray diffraction analysis is conducted in accordance with SOP-09.03 and TWS-EES-DP-116 (Ref H3).

6.6 Procedural Deviations

Deviations from this procedure shall be fully documented in the Daily Activity Log in SOP-01.04, explaining the deviation and the effects it may have on the resulting work.

UNCONTROLLED

7.0 REFERENCES

A. Siemens D500/501 Operating Instructions, C72000-B3463-A42, Siemens Corporation, Cherry Hill, New Jersey.

B. Siemens DIFFRAC5000 User's Manual, Siemens Corporation, Cherry Hill, New Jersey.

C. Anton Paar Instruction Manual for TTK-Temperature Attachment for Low and Medium Temperature, Anton Paar KG., Karntnerstrasse 322, A-8054 Graz/Austria.

D. Oxford Instruments Operating Manual for Model ITC4 Temperature Controller, May 1987 Issue 3, Oxford Instruments Limited, Osney Mead, Oxford OX2 0DX, England.

E. Powder Diffraction File, Search manual, Fink Method, Inorganic, Publication SMF-26 (Joint Committee on Powder Diffraction Standards, Swarthmore, Pennsylvania, 1976, pp. 1017.

F. Mineral Powder Diffraction File, Data Book (Joint Committee on Powder Diffraction Standards, Swarthmore, Pennsylvania, 1986) 1396 pp.

G. VAX-PDF2/CDIF JCPDS Software Program and database on CD-ROM for VAX-VMS systems. Joint Committee on Powder Diffraction Standards, Swarthmore, Pennsylvania.

H. The following procedures are from the Los Alamos National Laboratory Yucca Mountain Project Quality Assurance Manual in effect February, 1989.

H1. TWS-EES-DP-105, Thermal Calibration Procedures.

H2. TWS-EES-DP-101, Sample Identification and Control for Minerology Petrology Studies.

H3. TWS-EES-DP-116: Quantitative X-Ray Diffraction Data Reduction Procedure.

I. LANL-ER-SOPs in Section 1.0, General Instructions.

8.0 RECORDS

8.1 All X-ray runs shall be recorded on the Daily Log, records of which shall include date of run, sample identification, analyst's signature, diffractometer used, and any unusual run conditions.

8.2 A catalog of all computer-automated X-ray runs shall be maintained and periodically updated and stored on magnetic or optical media.

8.3 All raw X-ray data stored on magnetic or optical media shall periodically be backed up onto magnetic tape and stored in a fireproof safe.

UNCONTROLLED

8.4 Records that are readily regenerated from the raw data such as hard copy plots and peak search data sheets may be placed in labeled three-ring binders.

9.0 ATTACHMENTS

N/A

UNCONTROLLED

Los Alamos National Laboratory **Environmental Restoration Program** Standard Operating Procedure	No: LANL-ER-SOP-09.04 Rev: 0

Calibration and Alignment of The Siemens Diffractometers

UNCONTROLLED

	(Print Name)	(Signature)	(Date)
Preparer:	David L. Bish	David L. Bish	8/26/91
Quality Review by:	David Broxton	David Broxton	8/27/91
Technical Review by:	A.W. Laughlin	A.W. Laughlin	8/27/91
QPPL Approval:	Larry Maassen	Larry Maassen	8/30/91
PM Approval:	Robert W Vocke	Robert W Vocke	8/30/91

Effective Date: 3-12-92

CALIBRATION AND ALIGNMENT OF THE SIEMENS DIFFRACTOMETERS

1.0 PURPOSE

The purpose of this procedure is to describe the methods, procedures, and documentation required to align and calibrate the Siemens D500 X-ray powder diffractometers.

2.0 SCOPE

2.1 Applicability

This procedure applies to Siemens D500 X-ray diffractometers used to obtain analyses for the Environmental Restoration (ER) program. Due to safety considerations, the machine custodian is solely responsible for performing machine alignment. The ER user and the machine custodian performing calibration have the responsibility to adhere to this procedure.

2.2 Training

Only the machine custodian shall perform alignment of the instruments. Other personnel who have the technical training necessary may be certified to use this procedure. Reading and understanding this procedure as well as the six procedures in Section 1.0, General Instructions shall constitute training to this procedure.

UNCONTROLLED

3.0 DEFINITIONS

A. Machine Custodian: The person who is in charge of an analytical X-ray instrument and who is responsible for the maintenance and safety of the instrument.

B. Shorting Plug or Key: The plug (θ-2θ machine) or key (θ-θ machine) used to bypass the safety circuits to allow alignment. To be used only by the machine custodian.

C. TTK heating stage: The Anton-Paar heating stage that can be mounted on either the θ-θ or the θ-2 diffractometer.

D. NIST: National Institute of Science and Technology.

4.0 BACKGROUND AND/OR CAUTIONS

Calibration and, if necessary, alignment of the Siemens X-ray diffraction equipment must be performed on a periodic basis in order to assure that all data collected on the instruments yield accurate d-spacings. The calibration described here involves only d-spacings. Calibration may use any well-characterized d-spacing standard that is traceable to NIST, such as their standard reference materials. It is not necessary that the diffractometer have no error in 2θ. Calibration is performed to determine the magnitude and direction of any error in 2θ so that appropriate

calibration curves may be used when obtaining d-spacings. Alignment is performed only when calibration data reveal a significant error in alignment, usually after modification of the instrument (e.g., installation of new X-ray tube, installation of alternate sample holders, installation of the TTK).

Certain aspects of the alignment procedure require that one bypass the interlocks to work on the instrument with the X-ray beam on. The use of extreme caution and safety equipment such as lead-lined gloves is mandatory.

Highly accurate d-spacing measurements are not crucial to qualitative phase identification or quantitative phase analysis. However, it is useful and good laboratory practice to have a well-aligned diffractometer. In general, errors less than 0.02° 2θ are desirable, but errors up to 0.10° 2θ are acceptable in many cases. The Siemens DIFFRAC5000 software package will accept calibration data of virtually any magnitude so that relatively large errors will be corrected. It is recommended that any calibration yielding errors of greater than 0.02° 2θ be followed by alignment to reduce the errors below 0.02° 2θ. If calibration is not performed, calibration data should be documented with an explanation why further alignment was not necessary or practical.

There are few sources for error that would not be readily detected. A potential situation where minor error could occur is when the linear absorption coefficient or transparency of a sample being run is not similar to that of the standard used to calibrate the instrument. In this case, if accurate d-spacings were desired, the instrument should be calibrated with a standard of appropriate linear absorption coefficient or an analytical correction should be performed to correct for transparency effects.

The entry in the Daily Activity Log (see SOP-01.04) and the calibration sticker placed on the instrument shall constitute evidence that the procedure has been implemented and satisfactorily accomplished.

UNCONTROLLED

5.0 EQUIPMENT

- NIST SRM 640a or 640b Si Powder d-spacing Standard.
- Granite surface plate or precision flat plate.
- Height Gauge.
- Dial Indicator Gauge.
- Precision Right-Angle Block.
- Assorted Slits.
- Strip Chart Recorder.
- Assorted Screw Drivers and Wrenches.
- Shorting Plug or Key.
- Siemens DIFFRAC5000 software package.
- LCLSQ, lattice parameter refinement program.

6.0 PROCEDURE

Note: Only NIST traceable standards such as NIST SRM 640b shall be used to calibrate or check the calibration of the Siemens X-ray powder diffractometers.

Deviations from this procedure shall be fully documented on Daily Logs explaining the deviation and the effects it may have on the resulting work.

6.1 Calibration of Diffractometers

As required, either by time elapsed since last calibration check or by a change in the instrument or sample holder geometry, the instrument shall be calibrated against a certified standard reference material (SRM), such as NIST SRM 640a or 640b (Si powder), or against a secondary reference standard traceable to an NIST standard.

6.1.1 The calibration standard may be mounted either in a cavity or as a thin film to minimize specimen transparency effects.

6.1.2 The calibration standard shall be examined on the instrument over a 2θ range practical for the instrument and standard. A recommended procedure is to examine NIST SRM 640a or 640b from ~18° 2θ to ~150° 2θ using 0.01-0.02°-2θ steps and counting for at least 1.0 sec per step.

6.1.3 Determine peak positions for all diffraction maxima using the Siemens FIT program in the DIFFRAC5000 software package, typically using the split-Pearson VII profile. The results of the profile refinement may be compared with the certified values for the standard to assess the magnitude of the 2θ error.

6.1.4 Input observed and theoretical peak positions into the Siemens calibration file using the DIFFRAC5000 software. Detailed instructions are in the Siemens DIFFRAC5000 manual (Ref A).

6.2 Alignment of the Diffractometer

If a calibration check reveals significant errors in alignment (2θ errors generally greater than 0.02° 2θ), an alignment of the diffractometer should be performed. If only some aspects of the instrument have been modified, only an abbreviated alignment will be required. For example, if a new X-ray tube has been installed, only the tube height will require alignment. When the TTK stage is installed, both sample height (6.2.3) and θ zero point (6.2.5) must be checked and adjusted if necessary.

6.2.1 Specimen holder pin height. This step is performed only if the specimen stop-screws have been modified. Thus, in practice it is seldom if ever performed. 6.2.1 is not applicable to the TTK stage.

UNCONTROLLED

6.2.1.1 Check the three specimen stop-screws on the specimen holder for the same height. The two outer pins should be coplanar with the inner reference pin. (Item 46, Fig. 7, in reference 2.2).

Tools Needed

1) Granite surface plate or precision flat plate
2) Height gauge
3) Dial indicator gauge
4) Precision right-angle block.

6.2.1.2 Set the level of the specimen holder using the bar by the inner stop-screw.

6.2.1.3 Set the dial indicator height using the bar or inner screw.

6.2.1.4 Before adjusting stop-screws, the locking screws should be loosened. There is one for each stop-screw.

6.2.1.5 When the height of the three stop-screws is set, retighten the locking screws.

6.2.2 Install the specimen holder on the specimen carrier using the push rod which is built into the carrier. Use the flat surface of the rod and try to make the holder parallel to the rod. This step is performed only if the specimen holder has been removed from the specimen carrier. This step is not applicable to the TTK stage.

6.2.3 Check the specimen surface (this can be done without shorting plug or key in). The axis of rotation of the goniometer is on the specimen surface when the maximum intensities appear at $\theta = 0^\circ$ (front side) and 180° (back side). Note that the maximum intensities are approximately the same. This step is done only with the θ-2θ diffractometer and only if the specimen height has been modified. In practice, this is seldom if ever performed.

6.2.3.1

Slit positions:	I	II	III	IV
Slit:	1°	1°	---	.018°

(These are final slits - can start with wider slits, particularly #IV.)

6.2.3.2 Install glass alignment slit.

6.2.3.3 Insert an absorber plate into the direct beam to limit counts to below ~40,000 counts/sec. Set tube power to minimum (~7kV and ~3mA).

6.2.3.4 Find the maximum intensities by adjusting θ and 2θ independently and alternately on front ($\theta = 0^\circ$). Record 2θ and full scale counts.

UNCONTROLLED

6.2.3.5 Find the maximum intensities as above on back side (θ at 180°). This maximum intensity should be about the same value as the front side (θ = 0°). If intensity is different, move holder up and down - if you can't get it, the three pins are not in the same plane and 6.2.1 should be performed.

6.2.3.6 It is not important at this time that the θ and 2θ counting mechanisms read zero, but note only the 2θ values.

6.2.3.7 Ignore the θ value all together. The 2θ values only need to be to be the same, for θ front and back.

6.2.3.8 Compare the 2θ numbers found on front and back sides. The difference should be no greater than 0.02°. Do a θ-2θ scan on both front and back to insure that you are aligning on the main peak.

6.2.3.9 If the difference is greater than 0.02°, the specimen holder has to be moved closer or farther away from the push rod. If the front 2θ value is larger than the back 2θ value, the holder needs to moved towards the pin, i.e., down.

6.2.3.10 If the intensities (front and back sides) are not within ~10% of each other, then step 6.2.3.8 should be rechecked.

Note: The specimen surface height is set roughly on the TTK stage with the TTK alignment slit. However, the slit is too coarse to allow fine tuning of the specimen height. For the TTK and the θ-θ diffractometer (for which the sample stage cannot be rotated), fine adjustment of the specimen height is done performing multiple data collection runs and lattice parameter refinements using the program LCLSQ. LCLSQ allows refinement of a specimen displacement correction. Iterative data measurement, lattice parameter refinement, and specimen height adjustment will allow the specimen height to be adjusted precisely. Major adjustment should only be required after disassembly of the TTK stage. Adjustment of the specimen surface height on the θ-θ diffractometer should not be performed unless the specimen carrier has been disassembled.

6.2.4 Adjust tube height for maximum intensities when 2θ is reading zero. Use only the 0.018 slit in position IV and the glass slit in the sample position. Use no other slits.

6.2.4.1 Loosen the nut at top of tube slightly with small wrench in the D500 accessory kit. Loosen the allen screw at the lower back of the tube (Item 206 in Fig. 22d, reference B).

6.2.4.2 Move θ to front side.

6.2.4.3 Adjust 2θ off of maximum intensities, slightly toward zero.

UNCONTROLLED

6.2.4.4 Adjust tube height to get back toward maximum intensity (Item 215 of Fig. 22e in reference B).

6.2.4.5 Adjust θ so maximum intensity is restored.

6.2.4.6 Repeat above steps until you get zero 2θ with maximum intensity.

6.2.4.7 Tighten the nut and screw loosened in 6.2.4.1 above.

6.2.4.8 You should not have to set the height again unless a new tube is installed.

6.2.4.9 If the Kevex Psi detector is installed, steps 6.2.4.1 through 6.2.4.8 cannot be performed. Instead, tube-height alignment is performed using a high-angle reflection of a NIST standard such as Si. The tube height is incrementally adjusted until the high-angle reflection is located at the correct 2θ value obtained using profile refinement. Turning the allen screw on top of the tube clockwise (from above) lowers the observed peak positions.

6.2.5 With the glass slit in the sample position, adjust θ for zero with maximum intensity by means of the eccentric screw (Item 183 in Fig. 20 of reference B). As in previous 2θ adjustment, move toward zero slowly. Peak the eccentric in small steps until you get to zero. (Recheck after adjusting slits (slits 0.1, 3, --, 0.018 in slit positions I, II, III, and IV, respectively). This alignment cannot be performed with the Kevex Psi detector installed, and the scintillation detector must be installed. This step needs to be performed only if the specimen carrier has been removed. This step is difficult with the TTK stage because the alignment slit is so coarse. The recommended procedure with the TTK stage is to optimize the θ zero alignment with the slit and correct for any errors using the calibration procedure.

6.2.6 Adjust slit holder for slit positions I and II. Put in the smallest slits. If there is no intensity change, the slits are properly aligned. Do the same for slit positions III and IV.

6.2.6.1 Insert the following slits into the slit holder:

Slit position:	I	II	III	IV
Slit:	0.1°	3°	---	0.018°

6.2.6.2 Remove the sheet metal shield of the slit holder and, if necessary, the Soller slits.

6.2.6.3 Loosen the locking screws (Item 232 in Fig. 25 of reference B).

6.2.6.4 Reposition the sheet metal shield (radiation protection).

UNCONTROLLED

6.2.6.5 Displace the slit holder by means of the two adjusting screws (Item 231 in Fig. 25 of reference B) until the ratemeter or chart recorder indicates maximum intensity. In order to turn one adjusting screw in, it is necessary to loosen the opposite screw because these are pressure screws.

6.2.6.6 Insert smallest (0.1°) slit in position II, and you should get the same intensity or you must readjust.

6.2.6.7 Loosen two bottom screws for slit III and IV holder (allen screws are right behind slit III in white painted metal). Adjust slit holder for III and IV with the smallest slits in positions III and IV.

6.2.7 Run a scan on the glass slit through zero (see Fig. 5, reference C). This step does not apply to the TTK stage.

6.2.7.1 Set up for scan:

Slit position:	I	II	III	IV
Slit:	1°	1°	1°	0.018°

6.2.7.2 Set generator to minimum power (~7kV/3mA for FK60-04 Cu tube), ratemeter to ~2×10^4 counts/sec full scale, time constant = ~0.2, absorber in direct beam, diffractometer set to step at 1/5°/min upscale, the chart recorder set to feed at 2 cm/min, have θ and 2θ coupled.

6.2.7.3 Start scan at -999.500° 2θ (scan range is dependent on tube type).

6.2.7.4 This scan must be run automatically on the θ-θ machine, using the same conditions, starting 2θ position, and a 0.01° 2θ step size.

6.2.7.5 A good alignment will fulfill the following conditions:

1) The maximum of the primary beam must be within 0.006° of 0°.
2) The amplitudes of the two side maxima should not differ from one another by more than ~30%.
3) The amplitude of the main maximum should be about three times as high as those of the side maximum.

6.2.8 Optimization of 2θ calibration. This is done using a certified d-spacing standard such as the NIST SRM 640 Si series and compensates for systematic errors such as sample transparency and 2θ offset.

6.2.8.1 Mount the calibration standard as in 6.1.1.

6.2.8.2 With θ and 2θ synchronized, drive to high angles (typically over 100° 2θ) and locate a peak of appreciable intensity (one that can be easily detected). Set the X-ray tube kV and mA to typical operational values (45 kV, 35 mA).

UNCONTROLLED

6.2.8.3 Perform a quick automatic scan over the range of the peak and determine the observed peak position using the DIFFRAC5000 FIT program.

6.2.8.4 If the position of maximum intensity is not at the certified value, adjust the peak position by adjusting the tube height as in 6.2.4. When this step is complete, the position of maximum intensity should be at the certified value.

6.2.8.5 Refine the adjustments made in 6.2.5 and 6.2.6.

6.2.8.6 For a quick check of the quality of alignment, one or two high angle reflections may be measured as in 6.1. After determining that alignment is sufficient, perform complete calibration as in 6.1.

6.3 Optimization and calibration of the solid-state Si detectors.

6.3.1 Perform detector energy calibration as described in Kevex 4911 user's manual (reference D).

6.3.2 Set the detector bias to 500 volts.

6.4 Data Analysis

The Siemens DIFFRAC5000 software package is used to regress all data produced or required by this procedure. The program LCLSQ is used to determine the specimen displacement error when aligning the TTK stage and can also be used to determine a specimen displacement error with the conventional stages on both diffractometers.

UNCONTROLLED

7.0 REFERENCES

A. Siemens DIFFRAC5000 User's Manual, Siemens Corporation, Cherry Hill, NJ.

B. Siemens D500/501 Diffractometer Operating Instructions, #C72000-B3476- C42-6, Siemens Corporation, Cherry Hill, NJ.

C. Siemens Application Note #52, The New Siemens Diffractometer, Model D500.

D. Kevex 4911 Single Channel Spectrum Analyzer User's Manual, #7257-4911.

E. LANL-ER-SOPs in Section 1.0, General Instructions.

8.0 RECORDS

All calibration and alignment performed on Siemens diffractometers used for ER shall be documented on Daily Logs. Calibration records shall include date of calibration, standard used,

signature of the person performing calibration, the peak positions observed for the standard and the necessary corrections to 2θ. Alignment records shall include the date of alignment, the procedures performed, and the signature of the machine custodian performing the alignment. A new calibration sticker shall be placed on the front of the diffractometer following each calibration identifying when the instrument was calibrated, when the next calibration is due, and the name of the person who did the calibration.

9.0 ATTACHMENTS

N/A

UNCONTROLLED

Los Alamos National Laboratory **Environmental Restoration Program** Standard Operating Procedure	No: LANL-ER-SOP-09.05 Rev: 0

Clay Mineral Separation for X-Ray Diffraction Analysis

UNCONTROLLED

	(Print Name)	(Signature)	(Date)
Preparer:	David L. Bish	David L. Bish	8/26/91
Quality Review by:	DAVID BRUXTON	David Bruxton	8/27/91
Technical Review by:	A.W. Laughlin	A.W. Laughlin	8/27/91
QPPL Approval:	Larry Maassen	Larry Maassen	8/30/91
PM Approval:	Robert N Vocke	Robert N Vocke	8/30/91

Effective Date: 3-16-92

CLAY MINERAL SEPARATION FOR X-RAY DIFFRACTION ANALYSIS

1.0 PURPOSE

The purpose of this procedure is to describe separation of clay minerals from bulk rock samples and preparation of oriented sample mounts of clay minerals for analysis by X-ray diffraction.

2.0 SCOPE

2.1 Applicability

The procedure applies to separation and X-ray diffraction investigation of clay minerals for the Environmental Restoration (ER) program, and the ER certified user has the responsibility to adhere to this procedure when conducting clay mineral separations for the ER program.

2.2 Training

Personnel using this procedure for the ER program must have an understanding of the objectives of this procedure and be trained to use it and the SOPs in Section 1.0, General Instructions. Reading and understanding the procedure shall constitute training to this procedure.

UNCONTROLLED

3.0 DEFINITIONS

N/A

4.0 BACKGROUND AND/OR CAUTIONS

This procedure is based on Stokes Law settling of particles in a solution.

The Ultrasonic probe is placed in a sound-dampening box to help protect the hearing of the operator.

The use of de-ionized or distilled water to wash and disaggregate the samples is necessary to ensure that no chemical alteration of the clays occurs due to cation exchange. Thoroughly clean all sample preparation equipment and work areas before use.

Adherence to this procedure results in an acceptable sample for X-ray diffraction analysis. The purity of the individual samples and their size fractions are determined by X-ray diffraction. It is up to the certified person conducting the separation to determine if the clay fractions are of adequate purity for their work and shall be documented on the Daily Activity Log (see SOP-01.04). There are no real potential sources of error since this is a qualitative procedure.

5.0 EQUIPMENT

- Shatterbox (or large ball mill) -- most all acceptable.
- Ultrasonic probe capable of ~200 W.
- Centrifuge capable of 8000 RPM with a Sorvall GSA head.
- Sorvall GSA centrifuge head.
- Sorvall SS-34 centrifuge head (optional).
- Spray Drier (optional).
- No software is used.

6.0 PROCEDURE

6.1 Calibration

Not applicable. Samples are examined for purity using X-ray powder diffraction in accordance with SOP-09.03.

6.2 Samples

Samples will be tracked, handled, shipped, and stored in accordance with the procedure for Sample Identification and Control for Mineralogy-Petrology Studies (Ref A). Great care shall be exercised not to mix or contaminate samples. All subsequent analyses rely on this procedure. Carefully label containers into which the sample separates will be placed. Label side and top of each container so that tops cannot be switched.

6.3 Procedural Deviations

Deviations from this procedure shall be fully documented on the Daily Log by the person conducting the work and shall explain the deviation and the effects it may have on the resulting work.

6.4 Separation Procedure

6.4.1 Obtain approximately a one-to-two-inch slice of drill-core or an equivalent amount of drill cuttings or bulk-rock. If necessary, smaller amounts of sample can also be processed using this procedure.

UNCONTROLLED

6.4.2 Rid the sample of surface contamination using one of the following:

- Brisk strokes of a clean, dry bristled brush.
- Rinse with de-ionized or distilled water and dry thoroughly -- preferably at room temperature.

6.4.3 Break the bulk sample down into smaller pieces (less than 0.25 inch in diameter using:

- A mortar and pestle or,
- A mortar and pestle/hydraulic press apparatus.

6.4.4 Powder sample using either a shatterbox or large ball-mill.

6.4.5 Combine the entire powdered sample and mix thoroughly to ensure homogeneity. Place in a bottle properly labeled with the sample identification.

6.4.6 Take approximately 20-30 grams of the powdered sample and suspend it in approximately 500 to 700 ml of deionized or distilled water contained in a large plastic (~1000 ml) beaker. Disaggregate the sample for approximately 10-20 minutes at ~200 W using an ultrasonic probe. Longer times may be used if samples are difficult to disaggregate. Small amounts of sample may be readily separated using this procedure by substituting appropriately scaled glassware.

6.4.7 Remove the beaker containing the suspended sample from the ultrasonic probe enclosure and cover the beaker. Place the beaker on a vibrationally stable surface and allow the sample to settle gravitationally without interruption ideally for a time equal to 47 minutes per cm depth of water. This will allow sedimentation of all particles greater than 2µm diameter. For a typical 14 cm water depth, total settling time should be about 10.9 hours. Overnight settling using a water depth of 14 cm will result in sedimentation of slightly smaller particles, e.g., 15 hours settling will sediment particles >1.75 µm and 20 hours settling will sediment particles >1.5 µm.

6.4.8 Decant or syphon the supernatant from the beaker into large centrifuge tubes, taking care not to disturb the sediment at the bottom of the beaker. The sediment in the beaker may be discarded.

6.4.9 Place the centrifuge tubes in the centrifuge and separate the ~2.0-0.35 µm size fraction from suspension at a centrifugation speed of ~5000 revolutions per minutf ~5 minutes

Superspeed Angle Rotors: GSA and SS-34; Ref B).

UNCONTROLLED

6.4.10 Remove the centrifuge tubes from the centrifuge and decant the supernatant into large receiving centrifuge tubes, taking care not to disturb the sediment (>0.35 µm in diameter) at the base of the tube. Save this sediment fraction if needed.

6.4.11 Place the centrifuge tubes containing the cloudy supernatant in the centrifuge and separate the fine clay fraction (~0.35-0.10 µm in diameter) at a centrifugation speed of ~8000 revolutions per minute for a spin time of 40 to 60 minutes.

6.4.12 Remove the centrifuge tubes from the centrifuge and decant the supernatant into labeled beakers.

6.4.13 Remove the fine clay sediment fraction (~0.35-0.10 µm in diameter) from the base of the centrifuge tubes using a spatula and, if necessary, a small amount of deionized or distilled water. Save in a properly labeled sample bottle.

6.4.14 There are several options for processing the remaining supernatant material from step 6.4.13, (this supernatant contains the <0.10 um fraction). The options are as follows:

1: If not needed, it may be discarded.

2: Place the beakers on a low-temperature hotplate or warm surface to evaporate/concentrate until it will fit into a labeled sample bottle.

3: It can be further centrifuged using the Sorvall SS-34 head at a speed of ~15000 RPM for ~1 hour to remove some of the remaining clays.

4: It can be run through a spray drier which evaporates the liquid and allows the clay to be collected.

6.5 Preparation of Oriented Mounts for XRD Analysis

6.5.1 Suspend a clay mineral fraction in a small amount (approximately 10 to 20 ml) of deionized water contained in a small beaker.

6.5.2 Thoroughly clean and dry a glass or quartz slide appropriately sized for the diffractometer sample holder being used, and place it on a level, stable, warm surface. The sample number is written with indelible ink on the back of the slide.

6.5.3 Drop the suspended clay sample, using an eye dropper or pipette, onto the slide using only enough sample to cover the slide. Do not overfill the slide and do not add additional suspension after the suspension on the slide has begun to dry to ensure the best orientation of clay particles possible.

6.5.4 Allow the sample to dry undisturbed on the slide.

UNCONTROLLED

6.5.5 The sample is now ready for X-ray diffraction analysis (Ref F).

6.6 Clay fractions shall be placed in appropriately labeled sample bottles.

7.0 REFERENCES

Los Alamos National Laboratory Yucca Mountain Project Quality Assurance Manual in Effect January 1990, TWS-EES-DP-101: Sample Identification and Control for Mineralogy-Petrology Studies.

Sorvall Superspeed Angle Rotors, GSA and SS-34 Instruction Manual DuPont Company, Biomedical Products Division, Newtown, CT 06470.

LANL-ER-SOPs in Section 1.0, General Instructions.

LANL-ER-SOP-09.03, Operation of Siemans X-ray Diffractometer.

8.0 RECORDS

8.1 Full records of a clay separation, including full sample name or number, date of separation, and signature of the person separating each sample are to be recorded on Daily Logs.

8.2 All documentation requirements imposed by other procedures, both Yucca Mountain and ER, used during this procedure shall be completed in accordance with the procedures and attached to the Daily Logs.

9.0 ATTACHMENTS

N/A.

UNCONTROLLED

Los Alamos National Laboratory **Environmental Restoration Program** Standard Operating Procedure	No: LANL-ER-SOP-09.06 Rev: 0

Zeolite Purification and Separation

UNCONTROLLED

Preparer:	Steve J. Chipera (Print Name)	(Signature)	8/16/91 (Date)
Quality Review by:	DAVID BROXTON (Print Name)	David Broxton (Signature)	8/27/91 (Date)
Technical Review by:	A.W. Laughlin (Print Name)	A.W. Laughlin (Signature)	8/27/91 (Date)
QPPL Approval:	Larry Maassen (Print Name)	Larry Maassen (Signature)	8/29/91 (Date)
PM Approval:	Robert W Vocke (Print Name)	Robert W Vocke (Signature)	8/30/91 (Date)

Effective Date: 3-16-92

ZEOLITE PURIFICATION AND SEPARATION

1.0 PURPOSE

The purpose of this procedure is to describe the methods, procedures, and documentation used to purify/separate zeolites from zeolite-rich samples by sedimentation.

2.0 SCOPE

2.1 Applicability

This procedure applies to zeolite samples purified/separated for the Environmental Restoration (ER) Program.

2.2 Training

Only those persons certified for this procedure shall perform ER-related zeolite purifications/separations. Reading and understanding this procedure and the procedures in Section 1.0, General Instructions shall constitute training to this procedure.

3.0 DEFINITIONS

N/A

4.0 BACKGROUND AND/OR CAUTIONS

Zeolite-rich samples can be purified or extracted from a sample by means of sedimentation in water. This method relies on the difference in particle sizes and densities of the mineral components in the sample. This method is preferred over other methods due to the low magnetic susceptibilities of the zeolite (magnetic separations) or where one is concerned with potentially altering the chemical composition of the zeolite (heavy-liquid density separations).

Purity of the zeolite fractions may be confirmed by X-ray diffraction analyses. It is up to the certified personnel conducting the separation to decide whether the zeolite has been purified/separated sufficiently for the work to be conducted. This decision shall be documented in the Daily Activity Log, (see SOP-01.01.01, Records), by the certified personnel before conducting further research with the sample.

Known Limitations:

- This technique requires that the initial sample be fairly rich in zeolite.
- Minerals intergrown with the zeolites (such as opal-CT in clinoptilolite) can not be separated.

UNCONTROLLED

- Two similar species of zeolites such as mordenite in clinoptilolite do not separate very well.

5.0 EQUIPMENT

- Shatterbox (or large ball mill) -- most all acceptable.

- Ultrasonic probe capable of ~200 W.

The Ultrasonic probe is placed in a sound-dampening box to help protect the hearing of the operator. The use of de-ionized or distilled water is necessary to ensure that no chemical alteration of the zeolites occurs due to cation exchange. Thoroughly clean all sample preparation equipment and work areas before use.

6.0 PROCEDURES

Note: Calibration is not applicable. Samples are examined for purity using X-ray powder diffraction in accordance with SOP-09.04.

6.1 Samples

6.1.1 Samples will be tracked, handled, shipped, and stored in accordance with the procedure for Sample Identification and Control for Mineralogy-Petrology Studies (Ref A, SOP-01.03, Handling, Packaging and Shipping of Samples, and SOP-01.04, Sample Control and Documentation).

6.1.2 Carefully label containers into which the sample separates will be placed. Label sides and top of each container so that tops cannot be switched.

6.2 Separation Procedure

6.2.1 The zeolite-rich sample is first shatterboxed or ball-milled (~1 to 2 minutes) to break the sample down to a particle size that is closer to the grain size of its constituent phases.

6.2.2 ~30 to 60 grams of the zeolite sample are placed in a 1000ml plastic beaker filled with ~700-800ml of deionized water. (Glassware, beakers, and settling times are to be scaled appropriately when working with amounts of sample smaller than 30-60 grams).

6.2.3 Disaggregate the sample for approximately 10 to 15 minutes at ~200 W using an ultrasonic probe. Longer times may be used if samples are difficult to disaggregate.

6.2.4 Place the sample on a vibrationally stable surface without cooling it (the ultrasonic probe generates heat in the suspension) and allow it to settle for 30 to 60 seconds. The sediment is composed of the coarse fraction (>~20mm) which should include much

UNCONTROLLED

of the quartz, feldspars, and other mineral impurities, and also any larger clumps of zeolites that were not disaggregated. This fraction may be discarded.

6.2.5 Decant or syphon the supernatant into a second beaker and allow it to rest on a vibrationally stable surface for ~1 hour to settle out the 20-30mm size fraction. This is generally a fairly pure zeolite fraction.

6.2.6 Decant or syphon the supernatant into a third beaker and allow it to rest on a vibrationally stable surface overnight (15-20 hours) to settle out the ~3.0-1.0mm size fraction. This should also be a rather pure zeolite fraction.

6.2.7 The remaining supernatant, although it may have a high concentration of zeolite remaining, generally has a high concentration of smectite. It can be discarded, or further processed to concentrate the smectite for clay mineral analysis using Clay Mineral Separations, SOP-09.06.

6.2.8 The sediments from 6.2.5 and 6.2.6 are dried by placing the beakers with the sediments on a warm surface such as a hotplate set at ~50°C or allowed to air-dry at room temperature.

6.2.9 The dried sediments may be X-rayed to determine their purity in accordance with Operation of Siemens X-Ray Diffraction, SOP-09.04. Steps 6.2.2 to 6.2.7 may be repeated if further purification/separation is desired.

6.3 Procedural Deviations

Deviations from this procedure shall be fully documented in the Daily Activity Field Log of the person conducting the purification/separation explaining the deviation and the effects it may have on the resulting work.

UNCONTROLLED

7.0 REFERENCES

Los Alamos National Laboratory Yucca Mountain Project Quality Assurance Manual in effect 1/89, Sample Identification and Control for Mineralogy- Petrology Studies.
LANL-ER-SOPs in Section 1.0, General Instructions
LANL-ER-SOP-09.03, Operation of Siemens X-Ray Diffraction.
LANL-ER-SOP-09.05, Clay Mineral Separation.

8.0 RECORDS

All zeolite-rich samples purified/separated using this procedure shall be documented on Daily Logs including complete sample name or number, date that each sample was processed, and the signature of the person conducting the separation.

All documentation requirements imposed by other procedures, both Environmental Restoration and Yucca Mountain Project, used during this procedure shall be completed in accordance with the procedure.

Separated/purified zeolite fractions shall be placed in appropriately labeled sample bottles.

The notebook entry for a sample shall constitute evidence that the procedure has been implemented and satisfactorily accomplished for that sample.

9.0 ATTACHMENTS

N/A

UNCONTROLLED

Los Alamos National Laboratory **Environmental Restoration Program** Standard Operating Procedure	No: LANL-ER-SOP-9.07	Rev: 0

Operating Instructions for International Scientific Instruments Model DS-130 Scanning Electron Microscope and Tracor Northern Series II X-Ray Analyzer

UNCONTROLLED

Prepared by	Marjorie G. Snow (Print Name)	MG Snow (Signature)	2-13-92 (Date)
Quality Review by	Larry Maassen (Print Name)	Larry Maassen (Signature)	2-25-92 (Date)
Technical Review by	A.W. Laughlin (Print Name)	AW Laughlin (Signature)	2/17/92 (Date)
PM Approval	Robert W Vocke (Print Name)	Robert W Vocke (Signature)	3-4-92 (Date)
QPPL Approval	Karen L Warthen (Print Name)	Karen L Warthen (Signature)	3/4/92 (Date)

Effective Date: 3.16.92

Operating Instructions for International Scientific Instruments Model DS-130 Scanning Electron Microscope and Tracor Northern Series II X-Ray Analyzer

Table of Contents

1.0 PURPOSE 2

2.0 SCOPE 2
- 2.1 Applicability 2
- 2.2 Training 2

3.0 DEFINITIONS AND/OR ACRONYMS 2

4.0 BACKGROUND AND/OR CAUTIONS 3

5.0 EQUIPMENT 3
- 5.1 SEM 3
- 5.2 X-Ray Analyzer 4
- 5.3 Software 4

6.0 PROCEDURE 4
- 6.1 Sample Control and Preparation 4
- 6.2 Sample Identification 4
- 6.3 Implementing Procedure 5
- 6.4 Data Acquisition 5
- 6.5 Logbook 5
- 6.6 Instrument Calibration 5
- 6.7 Documentation of Procedural Deviations 6
- 6.8 Acceptance/Rejection Criteria 6

7.0 REFERENCES 6

8.0 RECORDS 7

9.0 ATTACHMENTS 7

UNCONTROLLED

Operating Instructions for International Scientific Instruments Model DS-130 Scanning Electron Microscope and Tracor Northern Series II X-Ray Analyzer

UNCONTROLLED

1.0 PURPOSE

This procedure provides instructions for the operation of the International Scientific Instruments (ISI) Model DS-130 scanning electron microscope (SEM) and Tracor Northern (TN) Series II x-ray analyzer.

2.0 SCOPE

2.1 Applicability

This procedure applies to electron microanalysis studies of geologic specimens and other materials documented as Environmental Restoration (ER) program samples using the ISI DS-130 scanning electron microscope and TN Series II x-ray analyzer.

2.2 Training

Training for operators consists of reading and applying this procedure, and the instruction and operator manuals for the ISI Model DS-130 SEM and TN Series II x-ray analyzer. Operators also receive training through hands-on operation of the equipment under the supervision of the machine custodian. Training will be documented in the ISI System logbook and the operator's personnel file. In addition the operator must document that he has read and understands the procedures in Section 1.0, General Instructions.

3.0 DEFINITIONS AND/OR ACRONYMS

A. ISI: International Scientific Instruments, Inc.

B. TN: Tracor Northern (now Noran Instruments, Inc.).

C. SEM: Scanning Electron Microscope.

D. EDS: Energy Dispersive Spectrometer.

E. ISI System: Combined ISI SEM and TN Series II X-Ray Analyzer System.

4.0 BACKGROUND AND/OR CAUTIONS

The ISI System is used to obtain high-magnification images, determine the identities and distributions of elements in samples, provide quantitative elemental analyses, perform complex image analyses, and characterize particulate samples.

The machine custodian is responsible for performing routine maintenance including system software and electronically-stored system back-ups; calibration of magnification and Energy Dispersive Spectrometer (EDS) gain; EDS resolution check; instruction of operators in the use of the system; and certification of operators for this procedure. The machine custodian may delegate responsibilities for the ISI System including maintenance, calibration, resolution check, and instruction to specific operators; delegation will be documented in the ISI System logbook.

The operator determines the acceptability of data produced by implementation of this procedure and is responsible for the proper storage and disposition of hard-copy and magnetic media data records. The operator is responsible for final disposition and/or storage of samples and materials. Operators are responsible for the calibration of semiquantitative and quantitative analytical routines used in their particular data acquisitions.

Normal interior building temperature and humidity are acceptable for the operation of the ISI System. Compressed air in the range of 50 to 80 pounds per square inch (psi) is supplied by the building utilities. Cooling water for the ISI System vacuum pump is supplied by a chilled water system maintained in the range of 40° to 70°F. Ambient air temperature for the ISI System should range between 60° and 80°F. When operating the ISI System in a quantitative mode, operators should take extra precaution to ensure that the instrument maintains calibration when environmental conditions are out of range.

Malfunctions of the ISI System is readily detectable by operators during operation of the instrument.

5.0 EQUIPMENT

5.1 SEM

The ISI DS-130 SEM (purchase date September 1980) is fully described in the Instruction Manual for ISI's Model DS-130 SEM. The electron source was modified (installed March 1987) to be a dual source tungsten or lanthanum hexaboride (LaB6) and is described in the Operation Manual for SEM with LaB6 Filament.

UNCONTROLLED

5.2 X-Ray Analyzer

The x-ray analyzer and image analysis system is a TN Series II X-Ray Analyzer (purchase date August 1987). This equipment is described in the Series II X-Ray Analyzer Operator's Manuals.

5.3 Software

The TN Series II software (listed in Section 7.0) is commercially acquired software provided with the system or purchased directly from Tracor Northern and is upgraded directly by Noran Instruments, Inc. (formerly Tracor Northern).

6.0 PROCEDURE

6.1 Sample Control and Preparation

Samples to be examined in the ISI System must be in a form or size that can be inserted into, or attached to, an ISI DS-130 stage mount.

Before being placed in the ISI SEM, a sample may be given an electrically conductive coating (usually carbon or gold). Conductive samples may not require coating. Non-conductive samples may not require coating if examined at low accelerating voltages. The operator will determine what type of conductive coating, if any, is appropriate. Carbon-coating procedures are outlined in the Instruction Manual. Ladd Vacuum Evaporator. Gold-coating procedures are outlined in the Hummer II Operation and Maintenance Manual.

Ion-etching may be used to enhance surface features for examination in the ISI SEM. Ion-etching procedures are outlined in the Instruction Manual. Gatan 600 Series Dual Ion Mill.

Standards under SOP 09.09 (Certification of Standards for Microanalysis) may be used for calibration of quantitative elemental X-ray analysis routines. Operators may use other standards for specific applications but must document the basis for usage of these standards in their ER notebooks.

6.2 Sample Identification

SEM sample stubs or thin sections are marked with an ER control number. If it is not practical to place the entire ER control number on the sample mount, an abbreviated number may be placed on the mount. The abbreviated number, accompanied by the complete ER control number, is recorded in the operator's ER notebook as part of the work description.

UNCONTROLLED

6.3 Implementing Procedure

The ISI System is set up and operated according to the instructions contained in the Instructions Manual for ISI's Model DS-130 and TN Series II X-ray Analyzer Operator's Manuals. The manuals are stored in the laboratory near the instruments.

The ISI System is capable of analytical work in the following general areas: elemental qualitative and semi-quantitative analysis using no standards, quantitative elemental analysis using standards, image analysis, particle analysis, elemental mapping, elemental line profiles, and composite analysis of X-ray maps and images. Operators are responsible for determining what procedures are appropriate for their work. Operators are required to list procedures used to produce data in the Daily Activity Log.

6.4 Data Acquisition

Data may consist of either image information or elemental information.

Image and elemental information may be photographed by following the instructions in the Instruction Manual for ISI's Model DS-130 SEM and the Instruction Manual, "Rembrandt" Model 3500F Computer Graphics Film Recorder. Each photograph will be labeled with the sample identification number.

Elemental information may be printed on paper following instructions in the operator's manuals if paper hard copy is desired. Each paper hard copy will be labeled with the sample identification number.

Image and elemental information may be stored on magnetic media for retrieval at a later date.

6.5 Logbook

An operator using the SEM enters the date of use and identification of samples studied in the ISI logbook. Additional information, as appropriate, may include the identification of data files generated. At the operator's discretion, descriptions of work performed or observations are recorded on the Daily Activity Log (SOP-01.04), along with the date and identification of samples.

6.6 Instrument Calibration

The computer-generated micrometer marker on the ISI SEM will be checked annually against National Institute of Science and Technology (NIST) Reference Material 484 and adjusted if appropriate. Tolerance ± 10%. If out of tolerance it

UNCONTROLLED

will be the machine custodian's responsibility obtain repair for the instrument so that it will be within the required tolerance. Results are documented in the ISI logbook. The results, date, and name of the person performing the check are recorded in the ISI logbook.

The gain on the TN Series II EDS will be checked annually by following the energy calibration instructions in the Series II X-Ray Analyzer Operator's Manuals using copper energy lines. Tolerance is ± 20 eV. If out of tolerance it will be the machine custodian's responsibility to calibrate the gain by running the Gain Calibration Program as described in the Tracor Northern Manual.

The resolution of the TN Series II EDS will be checked annually by measuring the full width at half maximum of the K alpha line from manganese. This is a check only for degradation of the detector; no adjustment is made.

6.7 Documentation of Procedural Deviations

Special research needs may require deviations from this procedure. The operator documents any deviations and the reasons that they were necessary in the SEM logbook and Daily Activity Log.

6.8 Acceptance/Rejection Criteria

The ISI DS-130 SEM produces high magnification images. Proper operation of the equipment is evident in the quality of the image produced. Improper operation of the ISI DS-130 SEM, or a sample that is charging, can produce a poor image. Operators should consult with the machine custodian if enhanced image quality is required.

Semiquantitative X-ray analytical data can be checked by analyzing standards. Operators must determine the appropriate tolerance.

Quantitative X-ray analytical data must have acceptance limits set by operators. Operators will accept or reject all quantitative data based on analyses of standards.

7.0 REFERENCES

LANL-ER-SOPs in Section 1.0, General Instructions.

Hummer II Operation and Maintenance Manual. Technics. 12 pgs.
Instruction Manual, Gatan 600 Series Dual Ion Mill, 33 pages.
Instruction Manual for ISI Model DS-130 SEM, 132 pgs.
Instruction Manual, "Rembrandt" Model 3500F Computer Graphic Film Recorder, 54 pgs.

UNCONTROLLED

Instruction Manual, SEM provided with a LaB6 Filament, 22 pgs.
Ladd Vacuum Evaporator, Instruction Manual for Ladd Vacuum Evaporator, Cat. No. 3000, 1988, 27 pgs.
Series II X-Ray Analyzer Operator's Manual, Tracor Northern.

Software programs

8.0 RECORDS

Operators will record the following information in the ISI Logbooks or on the Daily Activity Log: the ER sample number, date, relevant instrument working parameters (i.e. keV, sample current, working distance, spot size, aperture size), any data files generated, records of standards used to calibrate elemental analyses, and additional information appropriate to interpreting results and to reproducing analyses.

The results of magnification and gain calibrations, resolution check, date, and name of the person performing the calibrations and check will be recorded in the ER SEM System logbook and stickers will be placed on the ISI SEM and TN Series II X-Ray Analyzer consoles.

Handling, shipping, and storage of scientific samples is conducted according to the SOPs in Section 1.0 General Instructions. Sample identification for SEM materials is described in Section 6.2.

All deviations from this SOP are to be recorded on the Daily Activity Log and become part of the permanent record.

9.0 ATTACHMENTS

N/A

UNCONTROLLED

Los Alamos National Laboratory **Environmental Restoration Program** Standard Operating Procedure	No: LANL-ER-SOP-9.09	Rev: 0

Certification of Standards for Electron Microanalysis

	(Print Name)	(Signature)	(Date)
Prepared by	Marjorie G. Snow	M G Snow	2-3-92
Quality Review by	Larry Maassen	Larry Maassen	20 Feb 92
Technical Review by	A.W. Laughlin	A.W. Laughlin	2/7/92
PM Approval	Robert W Vocke	Robert W Vocke	3-4-92
QPPL Approval	Karen L Warthen	Karen L Warthen	3/4/92

Effective Date: 3-16-92

UNCONTROLLED

Certification of Standards for Electron Microanalysis

Table of Contents

1.0 PURPOSE 2

2.0 SCOPE 2
- 2.1 Applicability 2
- 2.2 Training 2

3.0 DEFINITIONS 2

4.0 BACKGROUND AND/OR CAUTIONS 3

5.0 EQUIPMENT 3

6.0 PROCEDURE 3
- 6.1 Purchase or Acquisition of Certified Standards 3
- 6.2 Certification of Other Materials 3
  - 6.2.1 Composition 4
    - 6.2.1.1 EDS 4
    - 6.2.1.2 WDS 4
    - 6.2.1.3 Homogeneity 5
    - 6.2.1.4 Quantitative composition 5
- 6.3 Acceptance/Rejection Criteria 5
- 6.4 Data Acquisition 6
- 6.5 Calibration 6
- 6.6 Deviations 6

7.0 REFERENCES 6

8.0 RECORDS 7

9.0 ATTACHMENTS 8

UNCONTROLLED

Certification of Standards for Electron Microanalysis

1.0 PURPOSE

This procedure documents criteria that must be met for the purchase or acquisition of certified microanalysis standards, provides instructions for certifying elemental composition and homogeneity of mineral and synthetic non-certified standards for microanalysis, and provides a list of certified standards.

2.0 SCOPE

2.1 Applicability

This procedure applies to standards used in microanalysis studies of geologic specimens and other materials documented as Environmental Restoration (ER) Program samples.

The machine custodian is responsible for the purchase or acquisition of standards for microanalysis and for keeping the List of Certified Standards up to date. The operator determines the acceptability of data produced by implementation of this procedure and is responsible for the proper storage and disposition of hard-copy and magnetic media data records. The operator is also responsible for final disposition and/or storage of samples and materials and for calibration of analytical routines used in certification procedures.

2.2 Training

The machine custodian is responsible for training operators to this procedure and for documenting operators training. In order to be trained for the use of the microprobe, the operator must first be familiar with this procedure, then hands-on operation of the equipment under the supervision of the machine custodian. The operator must also document that he has read and understood the procedures in Section 1.0, General Instructions, of the ER SOPs.

3.0 DEFINITIONS

A. EMP: Electron Microprobe

B. EDS: Energy Dispersive Spectrometer

C. WDS: Wavelength Dispersive Spectrometer

D. Bence-Albee: An empirical matrix correction program used specifically for oxide minerals. Refer to BA85: A Bence-Albee Oxide Analysis Program with Mineral Code Capabilities.

UNCONTROLLED

E. PRZ: A quantitative matrix correction technique based on the distribution of x-rays as a function of depth. Refer to PRZ85: A Subroutined Quantitative Analysis Correction Procedure Using the Bastin j(pZ) Technique.

4.0 BACKGROUND AND/OR CAUTIONS

Quantitative X-ray microanalysis is based on measuring the X-ray intensity of an unknown and comparing it to that of a known reference material, a standard. The most reliable results for unknown samples are obtained when the reference materials are as similar as possible to the unknown sample (e.g., use silicate reference materials when analyzing silicate unknowns, sulfide reference materials when analyzing sulfide unknowns). The requirements for standard reference materials are proper preparation, stability over time, careful analysis by independent methods, and homogeneity at the micrometer scale.

Potential hold-points, calibrations, and environmental conditions are addressed in SOP-09.02, Operating the Microprobe.

Standards must be prepared in accordance with SOP-09.02, Operating the Microprobe, and all standards must be given an electrically conductive carbon coating, as described in the Instruction Manual, Ladd Vacuum Evaporator. Sample identification, control, and management must be in accordance with the SOPs in Section 1.0, General Instructions.

Standards are identified by scribing a four-character mnemonic on the top and bottom rims of the brass standard mount. Because the mounts are repolished periodically, the label on the top rim may not be visible at all times. Standards are stored either in the SEM, the EMP, or in a desiccator box. Unmounted standard materials will be stored in the standards file cabinet.

Environmental conditions acceptable for the operation of the EMP System are described in SOP-09.02.

UNCONTROLLED

5.0 EQUIPMENT

All hardware and software used in this procedure are described in detail in SOP-09.02, Operating the Microprobe.

6.0 PROCEDURE

6.1 Purchase or Acquisition of Certified Standards

Standards purchased from the National Institute of Standards and Technology (NIST, formerly NBS) or standards acquired from other analysts, for which the composition and homogeneity have been documented in published technical journals, and the standards have been widely distributed, are Certified Standards.

6.2 Certification of Other Materials

Potential standard materials received from other analysts and not meeting the acceptance criteria will be certified by checking for qualitative chemical composition and then for quantitative chemical composition and homogeneity.

6.2.1 Composition

6.2.1.1 EDS

EDS spectra will be acquired for 300 seconds in at least three spots, on the mineral grain. A large raster will be used and dead-time will be limited to less than 40%. One representative spectrum, with labels, will be stored on disk. One print-out (or plot) of a representative spectrum with labels will be stored in the Standard Certification book.

The sample will be deemed unacceptable for use as a standard if any elements are determined to be present that are not reported in the analysis received with the material or indicated by stoichiometry.

6.2.1.2 WDS

Ten qualitative analyses will be made on each grain accepted for qualitative chemical composition. If the sample is composed of many small grains as many spots as possible will be analyzed.

An analysis file will be set up following SOP-09.02, Operating the Microprobe, and calibrated using Certified Standards, (see Attachment A). If suitable Certified Standards are not available, other standards may be used but the basis for usage must be noted in the Standard Certification notebook.

Any potential sources of uncertainty will be revealed by the inability of the operator to achieve an acceptable calibration. Calibration will be checked by analyzing a standard as an unknown.

Setup parameters for the Electron Microprobe will meet (or better) the following requirements for precision:

- Standard Standard Deviation (SSD) = 0.5%,
- Unknown Standard Deviation (USD) = 0.5%.

Raw data output will be enabled. Setup parameters will be noted in the Standard Certification Notebook if different than listed here and the reason(s) for deviation from the prescribed parameters will be given.

UNCONTROLLED

Any potential sources of uncertainty will be revealed by the inability of the operator to achieve an acceptable calibration. Calibration will be checked by analyzing a standard as an unknown. The operator will determine whether the results are acceptable.

A reference measurement using the same settings will be made on a Certified Standard before and after each set of quantitative analyses. Instrument drift for each element to be used for calibration will be 3.0% or less of the greater value of the reference measurements.

6.2.1.3 Homogeneity

Major elements will be checked for homogeneity using the method described by Boyd et al. (1967), and later used by Jarosewich et al. (1981, 1983, 1987). This method calculates a Homogeneity Index, based on the ratio of the observed standard deviation to the standard deviation predicted from counting statistics. A sample is considered to be inhomogeneous if the Index is greater than three (3). Because the Index looses it sensitivity at low peak-to-background ratios, only major elements (greater than 2.0 wt. % oxide) will be measured for homogeneity.

The prospective standard will meet the requirements for homogeneity if the Index does not exceed three (3). The Homogeneity Index for each element in a standard will be listed in the standard certification notebook.

6.2.1.4 Quantitative composition

The range, mean, and standard deviation for each element present in a potential standard will be calculated from the quantitative analyses. Each element will be judged independently and the information will be listed in the Standard Certification Notebook.

UNCONTROLLED

6.3 Acceptance/Rejection Criteria

Quantitative X-Ray analytical data must have acceptance limits set by operators. Refer to SOP-09.02, Operating the Microprobe, for general criteria for acceptance. Some potential sources of uncertainty will be revealed by the inability to achieve an acceptable calibration as evidenced by analyzing a certified standard as an unknown and comparing the calculated values to the listed standards values. Operators will accept or reject all quantitative data based on analyses of certified standards.

The sample will be accepted as a Certified Standard if the following criteria are met:

- The Homogeneity Index is not greater than three (3),

- The range of values for each element is within ±0.75% (relative),
- The standard deviation is within ±0.5% (relative) of the mean concentration,
- The mean concentration is within ±0.5% (relative) of the non-certified value.

If any grain in a sample does not meet these criteria the entire mount will be rejected as a Certified Standard and labeled as, "not certified for ER work."

6.4 Data Acquisition

The data collected is elemental information which is printed for hard copy following each analysis. The hard copy (both the computer print-out of the analysis and the printed spectrum) contains the standard identifier. The elemental information is also stored on magnetic media for retrieval at a later date.

6.5 Calibration

All calibrations pertinent to this procedure are described in SOP-09.02.

6.6 Deviations

Special research needs may require deviations from this procedure. The operator documents any deviations in the Standard Certification notebook, or on the Daily Activity Log (SOP-01.04).

UNCONTROLLED

7.0 REFERENCES

LANL-ER-SOPs in Section 1.0, General Instructions
LANL-ER-SOP-9.02, Electron Microprobe Operating Procedure
LANL-ER-SOP-9.09, Scanning Electron Microscope Operating Procedure

Boyd, F. R., L. W. Finger, and F. Chayes. 1967. Computer Reduction of Electron Probe Data, Carnegie Institution Yearbook.

Cameca Technical Manual. Option A-21

Chambers, W. F., J. Doyle. 1990. SANDIA TASK8. Version C: A Subroutined Electron Microprobe Automation System, SAND 90-1702.

Chambers, W. F., BA85: A Bence-Albee Oxide Analysis Program with Mineral Code Capabilities. SAND 85-2034.

Doyle, J. H., W. F. Chambers. PRZ85: A Subroutined Quantitative Analysis Correction Procedure Using the Bastin f Technique. Rockwell Rocky Flats Report RFP-3215.

Doyle, J. H. ZAF8: An Improved Quantitative Analysis for the Flextran-Language Systems. Rockwell Rocky Flats Report RFP-3215.

Jarosewich, E., R. Gooley, J. Husler. October 1987. Chromium Augite-A New Microprobe Reference Sample, Geostandards Newsletter, Vol. 11, No. 2.

Jarosewich, E. and I. G. Macintyre. 1983. Carbonate Reference Samples for Electron Microscope and Scanning Electron Microscope Analyses, Journal of Sedimentary Petrology, Vol. 53.

Jarosewich, E., J. A. Nelen, and J. A. Norberg. April 1980. Geostandards Newsletter, vol. 4, No. 1. Reference Samples for Electron Microprobe Analysis.

Ladd Vacuum Evaporator. Instruction Manual. Cat. No. 30000. 27 pages.

Los Alamos National Laboratory Yucca Mountain Project Quality Assurance Manual in effect July 1989. TWS-ESS-DP-122: Preparation of Electron Microprobe Standard Mounts

Tracor Northern (Noran Instruments, Inc.). Series IIX-Ray Analyzer Operator's Manual.

SAND 85-2035. 1985. CONFIG8: A Configuration File Generator for SANDIA TASK8.

UNCONTROLLED

8.0 RECORDS

Operators will have recorded the following information in the Standard Certification notebook and the Daily Activity Log:

- Standard identification number or label, date, relevant instrument working parameters,
- The Homogeneity Index for each element to be used for calibration purposes, and the range, mean, and standard deviation for each element,
- Data files generated,
- Records of standards used to calibrate quantitative analysis routines,
- Acceptance criteria,
- Deviations from this procedure, and
- Any information appropriate to interpreting results and to reproducing analyses.

All printed output from standard certification sessions with the EMF system will be retained by the machine custodian.

The floppy disks and/or diskettes assigned to the operator are temporary storage for analytical data and will be kept in the EMP room. It will be the operator's responsibility to edit, archive, and/or delete these files as needed.

All ER EMP system microanalysis data will be archived in a database on magnetic media

All other records, such as the Daily Activity Log, will be controlled in accordance with the SOPs in Section 1.0, General Instructions.

9.0 ATTACHMENTS

A. Listing for Certified Standards

UNCONTROLLED

LISTING FOR CURRENTLY AVAILABLE CERTIFIED STANDARDS

NIST Certified Standards:

SRM 470 containing	K-411,	"GL-39"
	K-412,	"GL-40"
SRM 1873 containing	K-458,	"GL-41"
	K-489,	"GL-42"
SRM 1871 containing	K-456,	"GL-46"
	K-492,	"GL-47"
	K-523,	"GL-48"

Smithsonian Institution, National Museum of Natural History Certified Standards:

Anorthite, USNM #137041, "F-14"
Anorthoclase, USNM #133868, "F-15"
Apatite, USNM #104021, "APA-3"
Augite, USNM #122142, "CP-14"
Benitoite, USNM #86539, "BEN-4"
Chromite, USNM #117075, "CHR-5"
Fayalite, USNM #85276, "OL-13"
Gahnite, USNM #145883, "GAH-2"
Garnet, USNM #87375, "GAR-8"
Glass, USNM #72854, "GL-44"
Hornblende, USNM #111356, "AMP-5"
Hornblende, USNM #143965, "AMP-6"
Ilmenite, USNM #96189, "ILM-5"
Magnetite, USNM #114887, "MAG-3"
Microcline, USNM #143966, "F-16"
Olivine, USNM #111312/444, "OL-14"
Plagioclase, USNM #115900, "F-17"
Pyrope, USNM # 143968, "GAR-9"
Scapolite, USNM #R6600-1, "SCP-3"
Cr-Augite, NMNH #164905, "CP-15"

UNCONTROLLED

Los Alamos National Laboratory **Environmental Restoration Program** Standard Operating Procedure	No: LANL-ER-SOP-10.01 Rev: 0

Screening of PCBs in Soil

	(Print Name)	(Signature)	(Date)
Preparer:	Sandra Wagner	Sandra Wagner	12-23-91
Quality Review by:	Larry Maassen	Larry Maassen	2-5-92
Technical Review by:	Micheline Devaurs	Micheline Devaurs	2/6/92
QPPL Approval:	Karen L Warthen	Karen L Warthen	3/3/92
PM Approval:	Robert W Vocke	Robert W Vocke	3-4-92

Effective Date: 3-16-92

UNCONTROLLED

Screening of PCBs in Soil

Table of Contents

1.0 PURPOSE 2
2.0 SCOPE 2
2.1 Applicability 2
2.2 Training 2
3.0 DEFINITIONS 2
4.0 BACKGROUND AND/OR CAUTIONS 2
5.0 EQUIPMENT 3
6.0 PROCEDURE 3
7.0 REFERENCES 4
8.0 RECORDS 4
9.0 ATTACHMENTS 5

UNCONTROLLED

Screening of PCBs in Soil

1.0 PURPOSE

This procedure describes the sampling for polychlorinated biphenyls (PCBs) in soil using the Dexsil® Clor-n-soil™ kit, L2000™ kit or an equivalent, for the Environmental Restoration (ER) Program.

2.0 SCOPE

2.1 Applicability

This method is applicable to all ER personnel sampling for PCBs. These analytical techniques will be used for screening only. Data used to substantiate regulatory compliance will be validated using Environmental Protection Agency approved methods.

2.2 Training

The field team members should be familiar with the objectives of PCB sampling and must document that they have read and understand this procedure and the procedures in Section 7.0, General Instructions.

3.0 DEFINITIONS

A. Clor-n-soil™ kit: A disposable test kit for determining PCB contamination in soil (see Attachment B). The kit works on the principle of chloride determination. Inorganic chlorides contained in PCBs are removed in a filter tube. The kit will determine if PCB concentrations are above or below 50 parts per million.

B. L2000™ kit: A PCB analyzer that provides accurate analysis of PCB concentration in oil by testing for the total amount of chlorine that is present in the sample. The L2000™ reads out directly in parts per million PCB and utilizes three different settings to increase precision for different types of PCBs.

4.0 BACKGROUND AND/OR CAUTIONS

PCB oils were used in air and gas compressor systems as hydraulic, lubricating, mechanical seal oils, and in electrical equipment, such as capacitors. Through several mechanisms, including blow-by, PCBs entered pipeline systems and are distributed in pipelines with hydrocarbon condensate. These PCB-contaminated condensates are known to have contaminated numerous matrices, including:

UNCONTROLLED

Drip pits and storage areas
Crankcases and oil reserves
Septic systems and leach fields
Storm and room drains
Oil reclaim systems (on-site and off-site)
Burn and disposal pits
Pipe and interconnects
Air handling and air receivers
Building Sumps
Floor drains
Oil skimmers
Open drainage ways and tile fields
Roadways (from oiling)

This contamination has sometimes resulted in rather random, but frequently predictable distribution of PCBs across a site. Frequently the more widely distributed PCBs are at levels that do not exceed cleanup standards. This must be confirmed by statistically valid sampling and analysis.

Analysis for PCBs is sometimes costly and time consuming with results typically being returned in 2 to 4 weeks from the time of submission to a laboratory. PCB field screening kits are excellent alternatives because they provide simple (can be run by nontechnical field personnel), economical and quick (20 minutes) results in the field. The kits are generally PCB specific, however, Pentachlorophenol, 2,2',5,5'-Tetrabromobiphenyl, Tetradifon, Holowax, and other chlorinated compounds may cause interferences. These kits are most effective when PCBs are the only contaminant.

The hazard associated with using a PCB screening kit is the possibility of coming in contact with metallic sodium, solvents and mercuric nitrate. These compounds are contained in glass ampules. When crushing the ampules, press firmly in the center of the glass ampule ONCE. Do not recrush glass tube. In case of breakage or spillage onto skin or clothing, wash immediately with large amounts of water. None of the solutions in the kit should not be taken internally. Do not expose broken sodium ampule to moisture, sodium will form hydrogen and sodium oxide when moisture is present.

UNCONTROLLED

5.0 EQUIPMENT

PCB Screening Kit
Personal Protective equipment (rubber gloves and safety glasses)
Sample Collection Log
Daily Activity Log

6.0 PROCEDURE

A. Gather all necessary materials as specified by the PCB screening kit. Decontaminate soil sampling equipment as necessary per SOP-02.07, General Equipment Decontamination.

B. The following instructions outline the simplified test procedure for the Clor-n-soil PCB screening kits. However, when conducting a field test, carefully follow the procedures for soil screening for PCBs that are provided with each kit used.

1. Make sure that all soil lumps are completely crushed to assure full extraction of PCB.

2. Weigh out 10 grams of soil sample. When weighing out the soil sample, suspend the scale freely by holding on to the metal ring at the top of the scale.

3. Mix the 10 grams of soil with an extraction solvent.

4. Allow the solvent and soil to settle.

5. Put the solvent through a drying column. When pushing the solvent through the drying tube, do not force it through too quickly as some contaminants may pass through.

6. Test the solvent using metallic sodium to strip the chlorine off the PCB molecule.

7. The chlorine is then transferred to the aqueous phase and measured with a precise amount of mercuric nitrate and indicator solution. If there is no organic chlorine present then the mercury turns vivid purple with the indicator; if there are no chlorinates present, then the mercury is tied up and no color results. **NOTE:** Any organic chlorine containing compound will also be detected with the kit and may cause a false positive result.

C. Perform tests only in well ventilated areas.

D. Always wear rubber gloves and safety glasses when performing tests.

E. Record all information pertaining to the type of kit, lot and/or serial number, progress, and results of the field test on the Sample Collection Log and any additional information, deviations or comments on the Daily Activity Log (SOP-1.04).

F. Decontaminate equipment per SOP-2.07. Kits contain organic solvents and should be disposed of along with all other generated waste per SOP-1.06, Management of RFI-Generated Waste.

7.0 REFERENCES

LANL-ER-SOPs in Section 1.0, General Instructions.
LANL-ER-SOP-2.07, General Equipment Decontamination.

8.0 RECORDS

Completed Sample Collection Log.
Completed Daily Activity Log.

UNCONTROLLED

9.0 ATTACHMENTS

N/A

UNCONTROLLED

Los Alamos National Laboratory **Environmental Restoration Program** **Standard Operating Procedure**	No: LANL-ER-SOP-10.04 Rev: 1

FIDLER INSTRUMENT SYSTEM

	(Print Name)	(Signature)	(Date)
Prepared by	Rick Haaker	Rick Haaker	March 7, 1994
Quality Review by	Patricia F. Goulding	[illegible]	April 25, 1994
Technical Review by	JOHN MANN	John Mann, CHP	3-10-94
PM Approval	DAVID McINROY	[illegible]	4/27/94
QPPL Approval	LAWRENCE A. SOUZA	[illegible]	4/27/94

Effective Date: 5/5/94

UNCONTROLLED

FIDLER INSTRUMENT SYSTEM

Contents

1.0 PURPOSE 2

2.0 SCOPE 2
- 2.1 Applicability 2
- 2.2 Features 2
  - 2.2.1 Features of the TSA MCA-465
  - 2.2.2 Features of the Ludlum 2221 3
- 2.3 Training 3

3.0 INSTRUMENTATION AND DEFINITIONS 3
- 3.1 Definitions 3
- 3.2 Instrumentation 3
  - 3.2.1 MCA-465/FIDLER 4
  - 3.2.2 LUDLUM 2221 4

4.0 BACKGROUND AND PRECAUTIONS 4

5.0 EQUIPMENT 4
- 5.1 MCA-465/FIDLER 4

6.0 PROCEDURES 5
- 6.1 Calibration (Setting the Regions of Interest) 5
  - 6.1.1 TSA MCA-465 Calibration Balance 5
  - 6.1.2 Ludlum 2221 Calibration Balance 7
- 6.2 Daily Source Checks 8
  - 6.2.1 Materials for Source Checks and Chart Preparation 8
  - 6.2.2 Procedure for TSA MCA-465 8
  - 6.2.3 Procedure for Ludlum 2221 SCA 9
- 6.3 Determination of Background Level 9
  - 6.3.1 TSA MCA-465 9
- 6.4 Field Use 10
  - 6.4.1 TSA MCA-465 10

7.0 REFERENCES 11

8.0 RECORDS 11
- 8.1 TSA MCA-465 11
- 8.2 Ludlum 2221 11

9.0 ATTACHMENTS 12

UNCONTROLLED

FIDLER INSTRUMENT SYSTEM

1.0 PURPOSE

The following procedures outline the methods involved in the use of two instruments. One is the Environmental Protection Groups (ESH-8's) Multichannel Analyzer (MCA)-465/Field Instrument for Detecting Low Energy Radiations (FIDLER) instrument system (TSA Systems, 1992 a, b). The second is the use of the Ludlum Model 2221 single channel analyzer (Ludlum Measurements, 1989). Both instruments use the BICRON FIDLER thin NaI crystal detector.

Specific procedures are given for: 1) Calibration of an Energy Spectrum and setting Regions of Interest; 2) Quality Control Checks; and 3) Field Use.

2.0 SCOPE

Adequate controls shall be established to ensure that only correct and acceptable field measurements will be collected with the FIDLER in support of Environmental Management operations performed for the Department of Energy.

2.1 Applicability

These instruments are used in soil radiological surveys conducted at Los Alamos National Laboratory (the Laboratory). The Waste Site Studies (WSS) team of ESH-8 provides support to the Environmental Surveillance Program, to the Environmental Restoration (ER) Program investigations of potential release sites, and to the decommissioning and decontamination actions at the Laboratory.

Because the Laboratory routinely characterizes, handles, and disposes of soils contaminated with alpha- and beta-emitting radionuclides (accompanied by gamma and x-ray emissions) there is a need for a detector that can field-monitor soils and areas potentially contaminated with x-ray or low-energy gamma emitters.

The FIDLER detector is a scintillation detector that, when associated with a MCA or Single Channel Analyzer, has the ability to measure low-energy gamma and x-ray energies that may accompany alpha and/or beta decay.

2.2 Features

2.2.1 Features of the TSA MCA-465:

- 256 channel MCA
- 4 energy spectrum Regions of Interest (ROI) are available
- 14 memory locations for storing collected spectra are available
- RS-232 connector and associated software package to allow for memory transfer to Personal Computer (PC) and PC Set-Up

UNCONTROLLED

- Internal 1" x 2" NaI detector for measuring external penetrating background radiation

2.2.2 Features of the Ludlum 2221

- Gross count mode or single channel analysis
- Ratemeter and scaler count modes
- Four linear analog count rate scales and a log count rate scale
- Choice of time constants
- Selectable audio rate divider

2.3 Training

Personnel using these instruments will have been informed of the hazards associated with measuring radioactivity on soils. Both HAZWOPER and Radiation Worker Training will be required of personnel using these instruments. Training in the use of equipment owned by WSS will be the responsibility of WSS management. Calibration of equipment owned by WSS will be conducted only by WSS management or other WSS trained personnel. WSS may review and approve training of non-WSS personnel and calibration procedures used for non-WSS instruments. Training for Quality Control, determination of detection limits, and field use will be required for all users of the FIDLER. Training documentation includes: 1) list of individuals authorized to use the system; 2) date of completed training; 3) signature sheet indicating review of this standard operating procedure; and 4) signature sheet indicating completion of in-the-field training and use of the instruments.

UNCONTROLLED

3.0 INSTRUMENTATION AND DEFINITIONS

3.1 Definitions

BICRON FIDLER - a thin NaI crystal detector assembly that is sensitive to the low energy gamma and x-rays emitted by various radionuclides.

MCA - a system that collects amplified output signals from a detector and sorts them into the appropriate channels based on the energy of the incident radiation.

NaI (Sodium Iodide) - a hygroscopic, inorganic crystal which emits UV photons (scintillates) as a result of a gamma or x-ray depositing energy in the crystal.

ROI - this is the region around a Total Absorption Peak (TAP) of interest.

Single Channel Analyzer - a system that collects output signals from a detector and accepts only signals corresponding to a certain energy range.

3.2 Instrumentation

3.2.1 MCA-465/FIDLER

For operating the MCA electronics package as outlined in Section 6.0, the nomenclature used is described below:

- Words in capital italics refer to the menus available on the MCA readout.
- Underlined words refer to options available under the given menu.
- Words in double quotes refer to information that is displayed in a particular option.
- Words enclosed in arrows, e.g., <ENTER> refer to keys on the MCA.

In Addition:

- Options are selected using the up and down arrows.
- Option menus are selected by using the right arrow.
- Parameters are stored using the <ENTER> key.

3.2.2 LUDLUM 2221

High voltage is adjusted with rotation of the high voltage control with indication of the voltage on the LCD display. The numerical value displayed is not necessarily the actual voltage across the detector, however, the relative value is adequate for set-up and calibration. The "voltage" is properly set by adjustment while the detector is exposed to a source of known energy, i.e., the 59.5 keV gamma ray from Americium-241 (241-Am), as described in Section 6.1.2.

UNCONTROLLED

4.0 BACKGROUND AND PRECAUTIONS

1. The Photomultiplier Tube (PMT) operates at high voltage. Thus, care should be taken when connecting the signal cable to the output and input on the detector.

2. Changes in temperature cause gain shifts with the PMT, thus PMTs are temperature sensitive and rapid temperature changes can damage the NaI crystal. Always allow the FIDLER to warm up or cool down at a rate not exceeding 10°C (18°F) per hour. Sufficient warm-up time is needed before use. Ten minutes should be an adequate warm up time for this instrument.

3. Care must be taken to preclude any damage to the exposed beryllium window of the detector.

5.0 EQUIPMENT

5.1 MCA-465/FIDLER

1. BICRON FIDLER Detector
2. TSA Multichannel Analyzer
3. Power Cord

4. Connector Cables
5. Tripod
6. Instrument Stand
7. Check Sources and/or Standards
8. Data Recording Sheet, Tape Recorder, or Personal Computer for the recording of data

5.2 2221 FIDLER:

1. BICRON FIDLER Detector
2. LMI 2221 ratemeter-scaler
3. High Voltage Cable
4. Check Sources and/or Standards
5. Data Recording Sheet

6.0 PROCEDURES

6.1 Calibration (Setting the Regions of Interest)

6.1.1 TSA MCA-465 Calibration Balance

1. Be certain the MCA is turned off before connecting the communications/high voltage cable between the MCA and the detector.

2. Connect the 9-pin cable to the 9-pin external detector plug on the detector unit.

3. Connect the other end of the cable to the 9-pin plug on the MCA.

4. Turn on the MCA. It will go through a self-check before any counting is to be done.

5. Place the source in the source holder. The source element and reference number, activity, and traceability must be recorded and filled with quality assurance records for the FIDLER. These records will accompany data turned into the Records Processing Facility.

6. Place the tripod stand on the source holder.

7. Place the detector unit so that it fits all the way inside the tripod stand. The height of the stand should be adjusted so that the window of the detector is 30 cm (1 foot) from the surface of the source. The serial number for the detector must be recorded.

8. To calibrate the MCA so that the 100 keV energy corresponds to channel number 255, first determine the number of keV per channel using the following:

UNCONTROLLED

$$\frac{100\ keV}{\#\ of\ channels} = \frac{100\ keV}{255} = \frac{0.392\ keV}{channel}$$

With this information, the correct channel number for the energy of a check source can now be calculated. All reference information for the check source must be recorded. For example, using 241-Am as a check source, and measuring the 59.4 keV x-ray emitted, the channel number for this energy is calculated as follows:

59.4 *keV* * *channel #* = *channel* # 152

9. For this particular TAP, move the cursor on the MCA readout so that it is positioned at channel number 152.

10. Hit <mode> to get into the MODE menu. Choose the SET-UP mode using the cursor and arrow keys.

11. Select the PARAMETERS option by moving the cursor to this option, and pressing the right arrow key.

12. In the PARAMETERS menu, use the arrow keys to select a Live measurement time of "200" (count time of 200 seconds).

13. In the PARAMETERS menu, toggle the Time Mode option so that "Live" is displayed.

14. After the necessary parameters have been set, hit the <ENTER> key to store them in the unit. Exit the PARAMETERS menu.

15. From the SET-UP menu select the CALIBRATE option. The MCA will automatically begin to count the source.

16. Use the arrow keys to move the 59.4 keV peak until it is centered over or under the cursor.

17. Once the peak is centered, hit the <ENTER> key to store the calibration factor in the unit.

18. While still in the SET-UP menu, move the cursor to select the ROI set-up option.

19. The Lo energy and Hi energy ends of the ROIs are set to the Full Width Half Maximum (FWHM) on either side of the peak of interest by using the arrow keys, and hitting <ENTER>. The mode key allows you to set other ROIs once one has been established.

20. Select "Lo I" to be the channel number on the left (lower energy) end of the first peak which contains one-half the maximum number of counts in

UNCONTROLLED

that channel for that total absorption peak of interest. Likewise, select "Hi I" to be the channel number on the right (upper energy) end at the FWHM for that total absorption peak. Record the number of the "lo" and "hi" channels.

Note: If no one channel is exactly at the FWHM, use the channel with the closest number of counts to, but lower than, the FWHM as a bracketing channel.

21. For the second total absorption peak and ROI select "Lo II" and "Hi II" using the same criterion that was used to select "Lo I" and "Hi I". Record the numbers of the "Lo" and "Hi" channels.

22. Be sure to hit <ENTER> before exiting the ROI set-up menu.

23. The MCA and FIDLER probe are now energy calibrated.

6.1.2 Ludlum 2221 Calibration Balance

1. Be certain the LMI 2221 is turned off before connecting the communications/high voltage cable between the MCA and the detector.

2. Connect the high voltage cable to the FIDLER.

3. Connect the other end of the cable to LMI 2221.

4. Turn on the LMI 2221. Check the battery charge level; replace batteries if necessary.

5. Place the FIDLER on the source holder. The source element and reference must be recorded and filed with quality assurance records for the FIDLER. These records will accompany the radiological survey data.

6. Set the threshold to 110 and the window to 20.

7. Starting with a voltage of about 100 volts, adjust the high voltage to maximize the count rate for the 241-Am check source.

8. Set the Window and Threshold as follows:

   a. Leave the high voltage as set by step 7.

   b. Adjust the window to 40.

   c. Adjust the threshold to 100.

UNCONTROLLED

Caution: This sets the window to the energy range of 50 to 70 keV, which has been determined to be optimal for Am-241. It is not necessarily appropriate for other low energy gamma emitters.

9. The response of the LMI 2221 with FIDLER is now optimized for detecting Americium-241. Record the voltage, window and threshold values for future reference.

10. This procedure will be repeated whenever the quality control chart data indicates the instrument is out of control, and when the FIDLER, LMI 2221, or high voltage cable is replaced.

6.2 Daily Source Checks

A quality control source check is to be done each day the instrument is used in the field. The data are recorded on the Gamma Scintillation Detector Operational Check Data Sheet or the ESH-8 FIDLER Survey Sheet. See Attachments A and B. All reference information on the check source is to be recorded along with the count data on the form.

An Instrument Control Chart (Attachment C or similar) is also to be prepared using the data being accumulated on the daily Operational Check Data Sheet. The chart tracks detector response to a known source as a function of calendar days. The chart is used to establish the consistency of detector response from day-to-day and determine acceptability of the data collected. If the chart in Attachment C is used, the following procedure is used (if a different chart is used, its procedure is followed).

After ten days' data are accumulated on the Operational Check Data Sheet, the MCA-465 ROI Totals or the LMI 2221 Total Counts are written into the left-hand column in numerical order and spaced equally from top to bottom, on the Instrument Control Chart (see Attachment B). The date of each determination is written across the top of the grid portion of the chart. A dot or "X" is then placed in the square at the point where the date and its count intersect. The mean of the ten counts is calculated and a line drawn across the chart at this value. As data is accumulated the mean may change in value and the line then relocated as necessary.

A plot of date vs count is thus generated. Lines representing one, two, and three standard deviations from the mean are also drawn in to help establish proper operating limits for the instruments. This process continues for each subsequent daily check as long as the instrument is in use.

6.2.1 Materials for Source Checks and Chart Preparation

1. TSA MCA-465 or LMI 2221 FIDLER System
2. Am-241 Source
3. Operational Check Data Sheet
4. Instrument Control Chart

UNCONTROLLED

6.2.2 Procedure for TSA MCA-465

Place the detector in the tripod stand and place the tripod over the source holder. Place the source in Position 1 of the holder and begin a 200 second count. At the end of the counting period, record the total number of counts in the regions of interest on the Operational Check Data Sheet. After enough data has been accumulated, prepare an Instrument Control Chart and transfer the data to the chart. Draw in the mean, and the first, second, and third standard deviation lines. Continue the process as each daily count is made. If a daily total count falls outside the third standard deviation line, contact the Waste Site Studies instrument owner.

6.2.3 Procedure for Ludlum 2221 SCA

1. Verify that the batteries are charged sufficiently and that the high voltage, window and threshold are set exactly as determined by step 6.1.2 of this procedure.

Caution: A shift in any of these settings will affect the response check result significantly.

2. Place the Am-241 check source in the source holder. Place the source detector on the source holder and take a one-minute count on each of the five scales of the counter. Record the results on the Gamma Scintillation Detector Operational Check Data Sheet.

3. Add the results and enter in the "Total Counts" column of the Operational Check Data Sheet.

   After enough daily data has been accumulated, prepare an Instrument Control Chart and transfer the data to the chart. Draw in the mean, and 1, 2, and 3 standard deviation lines. Continue the process as each daily count is made. If a daily total count falls outside the third standard deviation line, stop using the instrument until it has been repaired and re-calibrated.

6.3 Determination of Background Level

6.3.1 TSA MCA-465

Background Counting - Prior to use in the field a radiation-soil background check is performed for the detector. At the background location, ten 200 second readings are taken and recorded. A mean background count and the standard deviation from the mean are calculated and recorded.

UNCONTROLLED

Note: Background measurements should be performed in a known clean area adjacent to the location of interest in terrain similar to that of the target area.

6.3.2 LMI 2221

Background Counting - Prior to use in the field a radiation-soil background check is performed for the detector. At the background location, five 60 second readings are taken and recorded. The mean background count is calculated and recorded.

6.4 Field Use

6.4.1 TSA MCA-465

1. Be sure the instrument has been calibrated and contains charged batteries before going into the field. Check the batteries using the electrometer internal self-check.

2. At the measurement location in the field, set up the tripod and place the detector in the tripod. Place the electrometer as far away from the tripod as possible to prevent shielding of the soil sample to be measured.

3. Turn on the electrometer; after the self check, which verifies that the MCA recognizes an external probe is present, the instrument will be ready to record the field measurements. The instrument will be in the ROI mode after it is turned on. Begin the count by pressing the <START/STOP> key. The count time should be preset to 200 seconds, live time. If not, set to 200 seconds according to the procedure in Section 6.1.1 steps 11 and 12.

4. At the end of the measurement, the total number of counts in the regions of interest will be displayed on the Area Survey Sheet. See Attachment D.. Record the count values for the ROIs and the unique sample location. Repeat procedure at the next sample location, recording data at each stop.

5. If pertinent, store the field spectral measurement for a particular location in one of the 14 memory locations available in the electrometer. While in the ROI mode, hit STORE and select the Store Data option in the STORE menu. The measurement will be stored in the first available memory space. Record the memory area number in the logbook and associate it to a sampling location. When making a hard copy of data, the memory area number must be associated to the actual sampling location identifier.

UNCONTROLLED

6. The stored spectral data can be downloaded for further analysis from the MCA 465 using an RS-232 cable connected to a serial input port of a PC.

6.4.2 Ludlum 2221

1. Be sure the instrument has been calibrated and contains charged batteries before going into the field. Perform the daily response check and background check; verify that the instrument is "in control."

2. Determine the measurement location in the field; go to it and take the instrument with you.

3. Take the measurement at the height specified in the Work Plan.

4. If a grid point survey is being performed, the measurements should be integrated for 60 seconds, unless the approved work plan specifies a different integration period.

5. If a walkover survey is being performed between survey grid intersects, the instrument is used in ratemeter mode while listening to the audible signal for potential "hot spots."

6. At the end of the measurement, the total number of counts in the region of interest will be displayed. Record the count values for the ROI and the unique sample location on the Area Survey Sheet. Repeat this procedure at the next measurement location, recording data at each point.

UNCONTROLLED

7.0 REFERENCES

Ludlum Measurements, Inc. "Operating and Technical Manual - LMI 2221," Sweet Water, Texas, 1989.

TSA Systems Ltd. "Operating and Service Manual - MCA 465," TSA, 1820 Delaware Place, Longmont, CO, 80501, 1992, a.

TSA Systems Ltd. "Operating and Service Manual - External Probe Adaptor," TSA, 1820 Delaware Place, Longmont, CO, 80501, 1992, b.

8.0 RECORDS

8.1 TSA MCA-465

The data collected by the instrument can be recorded manually or stored in the memory locations of the electronics package. Information included with the data collection record includes name of personnel performing survey, date of sample reading, detector serial number, source check reference number, and date of last

calibration. Stored information can be downloaded to a PC via the available software. Hardcopies of all pertinent information are transferred to the Records Processing Facility by the Operable Unit Project Leader.

8.2 Ludlum 2221

The data collected by the instrument will be recorded manually using the data sheets represented in Attachments A, B, C, and D. Information to be recorded includes name of personnel performing survey, date of sample reading, the raw data collected (gross cpm), location (grid coordinates), detector serial number, source check reference number, and data of last calibration. Hardcopies of all pertinent information are transferred to the Records Processing Facility by the Operable Unit Project Leader.

9.0 ATTACHMENTS

Attachment A - Gamma Scintillation Detector Operational Check Data Sheet
Attachment B - ESH-8 FIDLER Survey Sheet
Attachment C - Instrument Control Chart
Attachment D - Area Survey Sheet

UNCONTROLLED

Los Alamos National Laboratory Environmental Restoration Program
GAMMA SCINTILLATION DETECTOR OPERATION CHECK DATA SHEET

Ratemeter/Scaler Make & Model _____ Serial No. _____ Calibration Expiration Date _____

Detector Make & Model _____ Serial No. _____ Calibration Expiration Date _____

Source: Type _____ Activity _____ Identification No. _____

Start Date _____ Technician Signature _____ Reviewer Signature _____

Date	LMI-2221 One minute integrated response to check source (cpm)					MCA-465 ROI or LMI-2221 Total Counts	LMI-2221 One minute integrated background count (cpm)					MCA-465 ROI or LMI-2221 Mean Counts	Batt OK?	H.V. OK?	Audio OK?	Tech's Initia's
	x1 scale	x10 scale	x100 scale	x1000 scale	Log scale		Count No. 1	Count No. 2	Count No. 3	Count No. 4	Count No. 5					

UNCONTROLLED

Los Alamos National Laboratory Environmental Restoration Program
ESH-8 FIDLER SURVEY SHEET

TA_____ OU _____ Subarea_____ Date _____

Analyst(s)_____

Instrument (Bicron) VIOLINIST/FIDLER Calibration Date _____ Probe No._____

Check Source_____ Source ID No._____ Activity_____

Sample Location (Site ID#)	Pu $\mu Ci/m^2$	Am $\mu Ci/m^2$	Cs $\mu Ci/m^2$	Region Of Interest Count/100 sec			Comments
				1	2	3	

UNCONTROLLED

Los Alamos National Laboratory Environmental Restoration Program
INSTRUMENT CONTROL CHART

Ratemeter/Scaler Make & Model _____ Serial No. _____

Detector Make & Model _____ Serial No. _____

Source: Type _____ Activity _____ Identification No. _____

Start Date _____ Technician Signature _____ Reviewer Signature _____

	DATE														
ROI or Total Counts															

UNCONTROLLED

Los Alamos National Laboratory Environmental Restoration Program
AREA SURVEY SHEET

Page _____ of _____

Job No. _____

Site: _____ Date: _____ Technician _____

Operable Unit: _____ RWP or Work Plan: _____

Area Size _____ Grid Size: _____

Purpose of Survey: _____

Instrument: _____ Serial Number: _____

Detector: _____ Serial Number: _____ Background: _____

Response Check: Should read: _____ Did read: _____

Count Rate (CPM)					
Coordinates North	Coordinates East				

Remarks: _____

Signature: _____ Reviewed by: _____

UNCONTROLLED

Los Alamos National Laboratory Environmental Restoration
GAMMA SCINTILLATION DETECTOR
OPERATIONAL CHECK DATA SHEET

UNCONTROLLED

Ratemeter/Scaler Make & Model_____ Serial No._____ Calibration Expiration Date_____

Detector Make & Model_____ Serial No._____ Calibration Expiration Date_____

Source: Type_____ Activity_____ Identification No._____

Start Date_____ Technician Signature_____ Reviewer Signature_____

Date	LMI-2221 One Minute integrated response to check source (cpm)					MCA-465 ROI or	LMI-2221 One minute integrated background count (cpm)					MCA-465 ROI or	Batt OK?	H.V OK?	Audio OK?	Tech's Initial's
	x1 scale	x10 scale	x100 scale	x1000 scale	Log scale	LMI-2221 Total Counts	Count No. 1	Count No. 2	Count No. 3	Count No. 4	Count No. 5	LMI-2221 Mean Counts				

Los Alamos National Laboratory Environmental Restoration

VIOLINIST FIDLER SURVEY
ESH-8 WASTE SITE STUDIES

TA_____ OU _____ Subarea_____ Date _____

Analyst(s)_____

Instrument (Bicron) VIOLINIST/FIDLER Calibration Date _____ Probe No._____

Check Source_____ Source ID No._____ Activity_____

Sample Location (Site ID#)	Pu $\mu Ci/m^2$	Am $\mu Ci/m^2$	Cs $\mu Ci/m^2$	Region Of Interest Count/100 sec.			Comments
				1	2	3	

UNCONTROLLED

Los Alamos National Laboratory Environmental Restoration
Instrument Control Chart

Ratemeter/Scaler Make & Model _____ Serial No._____

Detector Make & Model _____ Serial No._____

Source: Type _____ Activity_____ Identification No._____

Start Date _____ Technician Signature _____ Reviewer Signature_____

	DATE																						
ROI or Total Counts																							

UNCONTROLLED

Los Alamos National Laboratory Environmental Restoration
AREA SURVEY SHEET

Page_____ of_____

Job No._____

Site:_____ Date:_____ Technician:_____

Operable Unit:_____ Time:_____ RWP or Work Plan:_____

Area Size:_____ Grid Size_____

Purpose of Survey:_____

_____

Instrument:_____ Serial Number:_____

Detector:_____ Serial Number_____ Background_____

Response Check: Should Read:_____ Did Read:_____

Count Rate (CPM)

			Coordinates East		
Coordinates North					

Remarks:_____

_____

_____

Signature:_____ Reviewed by:_____

UNCONTROLLED

Environmental Restoration Program
INTERIM CHANGE NOTICE

EFFECTIVE DATE (Dist. date) 04/06/94 ICN NO. 003

Document No. LANL-ER-SOP-10.05 Rev 0 Title Field Analysis of Total Hydrocarbons Using the Hanby Method

Reason for Change

SOPs should indicate who is responsible for transmitting records to the RPF.

Description of Change (Specify page, paragraph, and/or section revised, and clearly write new text to be incorporated in the document.)

Page 6, Section 8. Add at the end of the Records Section:

It is the responsibility of the OUPL to ensure that records are transmitted to the Records Processing Facility, MS M707.

UNCONTROLLED

	(Print)	(Signature)	(Date)
Change requested by	Dave Bradbury		3/24/94
Technical Reviewer	PATRICIA M TILLERY	Patricia M Tillery	3/24/94
or			
Functional Reviewer	N/A		
Program Manager Approval	DAVID MCINROY		3/25/94
Quality Program Project Leader (QA review and approval)	LAWRENCE A. SOUZA		3/24/94

Los Alamos National Laboratory **Environmental Restoration Program** Standard Operating Procedure	No: LANL-ER-SOP-10.05 Rev: 0

Field Analysis Of Total Hydrocarbons Using The Hanby Method

UNCONTROLLED

	(Print Name)	(Signature)	(Date)
Prepared by	James W Heyser	James W. Heyser	2/25/94
Quality Review by	Patricia F. Goulding	[illegible]	2/25/94
Technical Review by	Merlin Wheeler	[illegible]	2/25/94
PM Approval	DAVID McINROY	[illegible]	3/1/94
QPPL Approval	LAWRENCE A. SOUZA	[illegible]	3/1/94

Effective Date: 3/9/94

Environmental Restoration Program
INTERIM CHANGE NOTICE

EFFECTIVE DATE (Dist. date) 04/06/94 ICN NO. 003

Document No. LANL-ER-SOP-10.05 Rev 0 Title Field Analysis of Total Hydrocarbons Using the Hanby Method

Reason for Change

SOPs should indicate who is responsible for transmitting records to the RPF.

Description of Change (Specify page, paragraph, and/or section revised, and clearly write new text to be incorporated in the document.)

Page 6, Section 8. Add at the end of the Records Section:

It is the responsibility of the OUPL to ensure that records are transmitted to the Records Processing Facility, MS M707.

UNCONTROLLED

	(Print)	(Signature)	(Date)
Change requested by	Dave Bradbury	D. Bradbury	3/24/94
Technical Reviewer	PATRICIA M TILLERY	Patricia M Tillery	3/24/94
or			
Functional Reviewer	N/A		
Program Manager Approval	DAVID MCINROY	D. McInroy	3/25/94
Quality Program Project Leader (QA review and approval)	LAWRENCE A. SOUZA	L. A. Souza	3/24/94

TABLE OF CONTENTS

1.0 PURPOSE 2
2.0 SCOPE
2.1 Applicability 2
2.2 Training 2
3.0 DEFINITIONS 2
4.0 BACKGROUND AND CAUTIONS 2
5.0 EQUIPMENT 3
6.0 PROCEDURE 3
6.1 Sampling Sites 3
6.2 Decontamination 3
6.3 Soil Samples 3
6.4 Water Samples 4
7.0 REFERENCES 5
8.0 RECORDS 5
9.0 ATTACHMENTS 6
ATTACHMENT A 7

UNCONTROLLED

Field Analysis Of Total Hydrocarbons Using The Hanby Method

1.0 PURPOSE

This procedure describes the field analysis of water and soil samples for aromatics and total petroleum hydrocarbons (TPH) using the Hanby Method, which is provided in a patented kit.

2.0 SCOPE

2.1 Applicability

This procedure applies to all personnel responsible for obtaining field measurements of petroleum hydrocarbons and aromatics using the Hanby Method during site characterization work for the Los Alamos National Laboratory (Laboratory) Environmental Restoration (ER) Program.

2.2 Training

The Task or Project Manager is responsible for ensuring that all personnel using this method are properly trained in this procedure. Field team members using this method shall be familiar with the objectives analysis for aromatics and TPH. They must document that they have read and understand this procedure and the kit instructions, seen the training video available with the kit, and read the safety precautions in the Material Safety Data Sheet (MSDS) provided with the kit.

UNCONTROLLED

3.0 DEFINITIONS

N/A

4.0 BACKGROUND AND CAUTIONS

The Hanby Method can be used for determining the approximate concentration of soils or liquids. It provides a quick field assay that can be used to locate contaminated areas and estimate the extent of the contamination.

The Hanby Method is an extraction/colorimetric method for measuring concentrations of specific petroleum hydrocarbons and aromatics. This method has been demonstrated to be highly accurate with typical minimum detection limits of 1 ppm for most constituents in soils and 0.1 ppm in water. The amount of color development and shade of color vary depending on the class of compounds analyzed (i.e., aromatics, such as benzene, toluene, and xylene; petroleum products, such as regular and unleaded gasoline, diesel, and kerosene; or polychlorinated biphenyls [PCBs], such as mixtures of Aroclors, a PCB tradename).

The Hanby Method is quantitative only when the class of compounds at the site is known and the results obtained are compared with a color photograph of standards consisting of the same compounds. Even when these conditions are satisfied, care should be exercised when the test results are in the range of 50 to 150 ppm. In this

range, some color will develop in the test sample, but the difference in color between 50 ppm and 150 ppm is slight. TPH concentrations determined by the Hanby Method should not be used, independently, as the basis for final remediation decisions. All results obtained by this method must be verified by a laboratory analysis of other samples.

The Hanby Method uses carbon tetrachloride as the extraction solvent. Carbon tetrachloride is a toxic irritant when inhaled, absorbed, or ingested and is listed as a suspected human carcinogen by the Occupational Safety and Health Administration (OSHA). As a waste, carbon tetrachloride is subject to the Resource Conservation Recovery Act.

Carbon tetrachloride vapors are denser than air so they will sink and accumulate in low spots. Therefore, the following safety precautions must be followed:

- All contaminated materials must be segregated and disposed of as hazardous waste according to the Laboratory ES&H Manual Administrative Requirement (AR) 9-4, Accidental Oil, Chemical and Airborne Releases, and AR 10-3, Hazardous and Mixed Waste.

- An MSDS for carbon tetrachloride should be available at all locations where this test is used in accordance with OSHA regulations.

5.0 EQUIPMENT

Equipment needed for this procedure is listed on the Equipment and Supplies Checklist for the Hanby Method Field Analysis Test Kit (Attachment A).

6.0 PROCEDURE

6.1 Sampling Sites

Refer to the site work plan to locate the sampling sites designated for analysis and the approximate boundaries of the potential release site.

6.2 Decontamination

Decontaminate all reusable sampling equipment before taking the first sample and between sampling intervals in accordance with appropriate SOPs. Gloves and Tyvek™ suits are not to be reused. Beakers containing residues soil samples, and extraction solvent must either be discarded as hazardous solid waste or decontaminated. If the beakers are decontaminated, the decontamination liquid must be disposed of as hazardous waste in accordance with Laboratory AR 10-3 and site-specific Waste Management Plans.

6.3 Soil Samples

Chemical-resistant gloves and safety glasses must be worn while working with the extraction solvent. Work is usually performed outdoors, but it may be performed

UNCONTROLLED

indoors in a properly functioning fume hood. Beakers containing extraction solvent should be kept well below the breathing zone, (i.e. at waist level) to reduce exposure to fumes. Minimize exposure time by having all equipment ready before the test is started. The beakers should be partially covered with aluminum foil during extractions to further reduce exposure.

For soil samples, follow the steps below (synopsized from the Hanby instructions):

1. Place a beaker on the balance and tare it. Quickly weigh out a 5 g soil sample (approx. 2 ml) in the beaker.

2. Break the top off the 10 ml ampule of extraction solvent, add it to the sample in the beaker, and agitate sample for 3 minutes. Avoid breathing the fumes.

3. Allow soil to settle and then pour solvent into a screw-top test tube to the 4.2 ml mark. Avoid contact with the solvent.

4. Add one vial of color development catalyst to the test tube. Screw on the cap tightly and shake the vial vigorously for 3 minutes.

5. Compare the hue and intensity of catalyst matrix settled at the bottom of the tube with color photographs of standards provided with the kit to determine the contaminant type and concentration.

6. Record analysis results (i.e., observed concentration and color of catalyst) in the field notebook in ink. Note location, time, and depth from which the sample was collected.

7. Pour excess solvent from the beaker into the liquid waste bottle. The soil and test tube with catalyst should be disposed of as solid hazardous waste. The beakers can be decontaminated as indicated above.

8. Ensure that all reusable equipment is inventoried, decontaminated, and properly stored. Inform the equipment manager of test kit supply needs.

UNCONTROLLED

6.4 Water Samples

The same safety precautions listed above for soil samples also apply to the analysis of water samples. Contact with the extraction solvent and vapors is to be avoided.

For water samples, follow the steps below (synopsized from the Hanby instructions):

1. Place a 500 ml water sample in a clean separatory funnel and set the funnel in a ringstand.

2. Add a 5 ml ampule of extraction reagent to the water sample and shake the funnel vigorously for 2 minutes. Periodically release the pressure build-up in the funnel by inverting it and opening the stopcock to vent the

funnel. Take care to avoid spilling liquid from the funnel or breathing vapors expelled during venting.

3. Set the funnel aside for 5 minutes, allowing the extraction phase to separate to the bottom of the funnel.

4. After phase separation, drain the lower extraction level into a screw-top test tube to the 4.2 ml mark, leaving a small amount of extraction solvent in the funnel. Water interferes with color development of the catalyst matrix and must be kept out of the extraction solvent placed in the test tube.

5. Add one vial of color development catalyst to the test tube and shake vigorously for 2 minutes or until a uniform color develops.

6. Compare the hue and intensity of color developed with color photographs of standards in water to determine the contaminant type and concentration.

7. Record analysis results including the color of catalyst matrix in the field notebook in ink. Note location, time, and depth at which sample was gathered.

8. Transfer water sample and remaining extraction phase into liquid waste container for disposal as hazardous waste. The test tube containing the catalyst matrix must similarly be disposed of as hazardous waste.

9. Ensure that all reusable equipment is inventoried, decontaminated, and properly stored. Inform the equipment manager of test kit supply needs.

UNCONTROLLED

7.0 REFERENCES

EPA (US Environmental Protection Agency), September 1990. "Field Measurements: Dependable Data When You Need It," EPA 530/UST-90/003, Washington, DC.

HNu-Hanby, "Soil Extraction Method", Instructions included in kit covered by U.S. Patent # 4,992,339, HNu Systems, Inc., Newton, MA

LANL ES&H Manual AR 9-4, "Accidental Oil, Chemical, and Airborne Releases"

LANL ES&H Manual AR 10-3, "Hazardous and Mixed Waste"

LANL-ER-SOP-01.01, R0, "General Instructions for Field Investigations"

8.0 RECORDS

Hanby Method field analysis results will be recorded in the field notebook and/or on appropriate log sheets in accordance with LANL-ER-SOP-01.01. Data to be recorded

should include the date and time of day, sample location (position and depth at site), type of sample, test results, and name of sample collector. Additional information should include comments about the sampling event and conclusions (e.g., need for further evaluation). Identification of any collocated samples, such as those submitted to a laboratory for verification, should also be included. The field team leader is responsible for the generation of all records required within this SOP.

9.0 ATTACHMENTS

Attachment A — Equipment and Supplies Checklist for the Hanby Method Field Analysis Test Kit

UNCONTROLLED

ATTACHMENT A

Equipment and Supplies Checklist for the Hanby Method Field Analysis Test Kit

UNCONTROLLED

- [ ] Scale (balance or electronic) to accurately weigh 5 gm samples
- [ ] Aluminum foil to cover beakers
- [ ] Labeled containers for liquid and solid hazardous wastes
- [ ] Safety glasses
- [ ] Chemical-resistant gloves
- [ ] Extraction reagent ampules (one for every analysis, 30 supplied in kit)
- [ ] Color development reagent (one for every analysis, 30 supplies in kit)
- [ ] Color photographs of standards (supplied with kit)
- [ ] 10-ml graduated cylinder
- [ ] 50-ml beakers (one for each soil sample)
- [ ] 500-ml separatory funnel (for water samples)
- [ ] Tripod ringstand

STANDARD OPERATING PROCEDURE

Title:	Identifier:	Revision:	Effective Date:
HIGH EXPLOSIVES SPOT TEST	ER-SOP-10.06	~~0~~ 1	3/1-/98

ER PROJECT

APPROVALS FOR USE

Author's Name (Print):	Author's Signature:	Date:
Terry Spontarielli	Terry Spontarielli	3/4/98
Quality Program Project Leader's Name (Print)	**Quality Program Project Leader's Signature**	**Date:**
ırry Maassen	Larry Maassen	3/6/98

LOS ALAMOS NATIONAL LABORATORY

HIGH EXPLOSIVES SPOT TEST

Table of Contents

1.0 PURPOSE 2

2.0 SCOPE 2
- 2.1 Applicability 2
- 2.2 Training 2

3.0 DEFINITIONS 2

4.0 BACKGROUND AND CAUTIONS 2

5.0 EQUIPMENT 3

6.0 PROCEDURE 3

7.0 REFERENCES 4

8.0 RECORDS 5

9.0 ATTACHMENTS 5

HIGH EXPLOSIVES SPOT TEST

1.0 PURPOSE

This procedure describes a high explosive spot test that can be performed in the field. The field method has been designed and provided by Explosives Technology Group, DX-2. The Spot Test and its results were reviewed and approved for use by the Los Alamos National Laboratory's Explosives Review Committee.

2.0 SCOPE

2.1 Applicability

This procedure applies to all personnel who will be testing for the presence of high explosives (HE) in homogenized soil that will be used for sample material.

2.2 Training

The field team leader and the sample team members who use this method must have been trained by a DX-2 representative. The DX-2 training must be documented, and trainees must document that they have read and understood this procedure in accordance with LANL-ER-AP-05.2, Determination, Completion and Documentation of Environmental Restoration Worker Training.

3.0 DEFINITIONS

N/A

4.0 BACKGROUND AND CAUTIONS

All documentation must be recorded in the field notebook or daily log per LANL-ER-SOP-01.04, Sample Control and Field Documentation. Deviations from the procedure must be recorded per LANL-ER-SOP-01.04.

HE sites are restricted. Follow LANL-ER-SOP-01.07, Taking Soil and Water Samples in Explosive Areas, for information regarding preparation of a facility work request per LIR230.03-01.1, Facility Management Work Control.

Once on site, follow the site-specific health and safety plan to ensure the protection of personnel performing this test. The HE Spot Test is used to screen for HE at sample locations as part of the safety protection for the field team members. However, a negative test result does not totally ensure that the location is free of HE; it only indicates that no HE is present in the small amount of soil used for the Spot Test. HE could still be present in the immediate area or even in the sampled material. Every precaution, including the use of the HE Spot Test, should be taken to keep all team members as safe as possible.

Please note that in the Chart for Use with the Modified Griess Reagent Spot Test for Explosives (Attachments A and B) an explosive is listed for which a color change would not be noted. The Spot Test usually frees the nitrogen from the explosive, thus indicating the presence of the high explosive

The reagents for the spot test include:

- Reagent 1: 0.1 molar sodium methoxide in DMSO
- Reagent 2: 10 mg/ml sulfanilimide in 0.2 molar hydrochloric acid
- Reagent 3[†]: 0.2 mg/ml N-1-naphthylethylenediamide dihydrochloride

[†] Reagent 3 is light-sensitive. Keep this reagent in the closed box when not in use.

All chemicals must be handled in a professional manner, using care to prevent splashing or spilling. Eye protection must be used when performing the test. Chemical-resistant gloves must be used. DMSO will penetrate the skin and carry chemicals into the bloodstream. Material Safety Data Sheets for the chemicals used in the kit should be on site and accompany the kit when transporting it on public roads to comply with Department of Transportation (DOT) regulations.

The Spot Test is not designed to give quantitative results. The concentration of HE in the sample is not the object of this test, and results of this method are not used as the basis for final remediation decisions. All samples that give a positive test result must be considered HE-contaminated regardless of the intensity of the color generated by the test.

5.0 EQUIPMENT

Modified Griess Reagent Spot Test for Explosives, as provided by DX-2

Small laboratory-type spatula, about 5 mm in width

Safety glasses or goggles

Chemical-resistant gloves

6.0 PROCEDURE

This test is to be performed on homogenized soil that is collected and is to be distributed to the sample containers.

A. Note any color change during the test. Use the Chart in the kit to determine the presence of specific HE. (The Chart is duplicated here in Attachment A.) If there is a color change, note the color and which reagent had been applied. Document the results in the field notebook and/or the sample collection logs. Negative results must also be documented in the field notebook and/or the sample collection logs.

B. Decontaminate the spatula if it is not new or there is a question about its previous decontamination.

C. Remove the filter paper from the kit. DX-2 provides a 5.5 cm diameter filter paper for this test, but other sizes could be used.

D. Scoop a small soil sample from the test location on to the filter paper using the spatula.

E. Apply a few drops of Reagent 1 to the sample. Note any color change. Check the Chart to identify the resultant color change indicated in the Reagent 1 column and the corresponding type of HE. Document positive results.

F. Apply a few drops of Reagent 2 to the same area of the sample.

G. Apply a few drops of Reagent 3 to the same area of the sample. Note any color change. Check the Chart to identify the resultant color change indicated in the Reagent 3 column and the corresponding type of HE. Document results in field notebook and/or sample collection logs.

H. Return the kit materials to the holding box. Be sure to put the bottles back into the plastic zip-lock bags containing kimwipes in order to comply with DOT regulations when transporting the kit.

I. Decontaminate the spatula.

J. Place the filter paper that contains the soil test material and discarded gloves and goggles in the appropriate waste container, following the site-specific Waste Management Plan.

7.0 REFERENCES

LANL-ER-AP-05.2, Determination, Completion and Documentation of Environmental Restoration Worker Training
LANL-ER-SOP-01.04, Sample Control and Field Documentation
LANL-ER-SOP-01.07, Taking Soil and Water Samples in Explosive Areas
Laboratory Implementation Requirement (LIR) 230-03.01.1, Facility Management Work Control
LANL-ES&H-AR-6-6, Explosives

8.0 RECORDS

Screening results can be recorded either in the Daily Activity Log or field notebook.

The field team leader is responsible for transmittal of all records that result from the use of this procedure to the ER Records Processing Facility.

9.0 ATTACHMENTS

Attachment A	Chart For Use with the Modified Griess Reagent Spot Test for Explosives
Attachment B	Commonly Used Abbreviations with Corresponding Chemical Names of HE

CHART FOR USE WITH THE MODIFIED GRIESS REAGENT SPOT TEST FOR EXPLOSIVES

To use this chart, follow the instructions in the Procedure Section of this SOP.

HE	Reagent 1 Resultant Color Change	Reagent 3 Resultant Color Change
NC	None	Purple
NG	None	Purple
PETN	None	Purple
RDX	None	Purple
TATB	Yellow Orange	None
Tetryl	Black-Red	None
TNT	Black-Purple	None

COMMONLY USED ABBREVIATIONS WITH CORRESPONDING CHEMICAL NAMES OF HE

HE Abbreviation	Chemical Names
NC	Nitrocellulose
NG	Nitroglycerine
PETN	Pentaerythrol tetranitrate
RDX	Hexogen. Cyclo-1,3,5-trimethylene-2,4,6-trnitramine
TATB	Triaminotrinitrobenzene
Tetryl	Trinitro-2,4,6-phenylemethylnitramine
TNT	Trinitrotoluene

Los Alamos National Laboratory **Environmental Restoration Program** Standard Operating Procedure	No: LANL-ER-SOP-10.06 Rev: 0

HIGH EXPLOSIVES SPOT TEST

UNCONTROLLED

	(Print Name)	(Signature)	(Date)
Prepared by	PATRICIA M TILLERY	Patricia M Tillery	Jan 30, 1995
Quality Review by	Tyson Lansford	[illegible]	March 10, 1995
Technical Review by	Cristina C. Montoya	Cristina C Montoya	Feb. 15, 1995
PM Approval	JORG JANSEN	[illegible]	5-22-95
QPPL Approval	LAWRENCE A. SOUZA	[illegible]	5/22/95

Effective Date: 5/31/95

High Explosives Spot Test

1.0 PURPOSE

This procedure describes a high explosive spot test that can be performed in the field. The field method has been designed and provided by Explosives Technology Group, DX-16. The Spot Test and its results were reviewed and approved for use by the LANL Explosives Review Committee.

2.0 SCOPE

2.1 Applicability

This procedure applies to all personnel who will be testing for the presence of high explosives (HE) in homogenized soil that will be used for sample material.

2.2 Training

The field team leader and the sample team members who use this method must have been trained by a DX-16 representative. The training must be documented, and trainees must document that they have read and understood this procedure.

3.0 DEFINITIONS

N/A

4.0 BACKGROUND AND CAUTIONS

The sites where HE testing would be performed are restricted. Site-specific health and safety plans will provide all information regarding expected hazards at the sites. Before sampling begins on site, any procedures or special work permits required by AR 6-6, Explosives, and AR 1-3, Standard Operating Procedures and Special Work Permits, must be in place.

Waste must be managed in accordance with the site-specific waste management plan, which addresses the waste issues in AR 10-3, Hazardous and Mixed Waste, and AR 10-8, Waste Minimization.

All documentation must be recorded in the field notebook or daily log per LANL-ER-SOP-01.04, Sample Control and Field Documentation. Deviations from the procedure must be recorded per LANL-ER-SOP-01.04.

The HE Spot Test is used to help ensure that HE are not present at sample locations, thus helping to ensure the safety of the field team members. However, a negative test result does not totally ensure that the location is free of HE; it only indicates that no HE is present in the small amount of soil used for the Spot Test. HE could still be present in the immediate area or even in the sampled material. Every precaution, including the

UNCONTROLLED

use of the HE Spot Test, should be taken to keep all team members as safe as possible.

Please note that in the Chart for Use with the Modified Griess Reagent Spot Test for Explosives (Attachment A) an explosive is listed for which a color change would not be noted. The Spot Test usually frees the nitrogen from the explosive, thus indicating the presence of the high explosive. However, this does not apply to NQ*. NQ was not widely used at LANL, and field team members must research the history of the site to determine if NQ was present. AN* is fertilizer and is used as a training tool for the HE Spot Test.

The reagents for the spot test include:

- Acetone
- Reagent 1: 0.5 M KOH, 70% DMSO
- Reagent 2: 1.2 M Hcl, 10 mg/ml Sulfanilamide
- Reagent 3†: 0.3 mg/ml N-1-Naphthylethylenediamide

† Reagent 3 is light-sensitive. Keep this reagent in the closed box when not in use.

All chemicals must be handled in a professional manner, using care to prevent splashing or spilling. Eye protection must be used when performing the test. Chemical-resistant gloves must be used. DMSO will penetrate the skin and carry chemicals into the bloodstream. Material Safety Data Sheets for the chemicals used in the kit should be on site and accompany the kit when transporting it on public roads to comply with Department of Transportation (DOT) regulations.

The Spot Test is not designed to give quantitative results. The concentration of HE in the sample is not the object of this test and results of this method are not used as the basis for final remediation decisions. All samples that give a positive test result must be considered HE-contaminated regardless of the intensity of the color generated by the test.

When using this test method, apply a small amount of the acetone to the sample before applying Reagent 1 for all tests. This simple measure screens for PETN in all tests.

5.0 EQUIPMENT

- Modified Griess Reagent Spot Test for Explosives, as provided by DX-16
- Small laboratory-type spatula, about 5 mm in width
- Safety glasses or goggles
- Chemical-resistant gloves

* See Attachment B for chemical names of the explosives mentioned in this procedure.

UNCONTROLLED

6.0 PROCEDURE

This test is to be performed on homogenized soil that is collected and is to be distributed to the sample containers.

A. Note any color change during the test. Use the Chart in the kit to determine the presence of specific HE. (The Chart is duplicated here in Attachment A .) If there is a color change, note the color and which reagent had been applied. Document the results in the field notebook and/or the sample collection logs. Negative results must also be documented in the field notebook and/or the sample collection logs.

B. Decontaminate the spatula if it is not new or there is a question about its previous decontamination.

C. Remove the filter paper from the kit. DX-16 provides a 5.5 cm diameter filter paper for this test, but other sizes could be used.

D. Scoop a small amount of soil from the test location on to the filter paper using the small spatula.

E. Apply a few drops of acetone. The acetone should not be allowed to evaporate before adding Reagent 1.

F. Apply a few drops of Reagent 1. Note any color change. Check the Chart to identify the resultant color change indicated in the Reagent 1 column and the corresponding type of HE. Document any positive results.

G. Apply a few drops of Reagent 2.

H. Apply a few drops of Reagent 3. Note any color change. Check the Chart to identify the resultant color change indicated in the Reagent 3 column and the corresponding type of HE. Document any positive results.

I. Return the kit materials to the holding box. Be sure to put the bottles back into the plastic zip-lock bags containing kimwipes in order to comply with DOT regulations when transporting the kit.

J. Decontaminate the spatula.

K. Place the filter paper that contains the soil test material and discarded gloves and goggles in the appropriate waste container, following the site-specific Waste Management Plan.

UNCONTROLLED

7.0 REFERENCES

LANL-ER-SOP-01.04, R2, Sample Control and Field Documentation
LANL-ES&H-AR 1-3, Standard Operating Procedures and Special Work Permits
LANL-ES&H-AR 6-6, Explosives
LANL-ES&H-AR 10-3, Hazardous and Mixed Waste
LANL-ES&H-AR 10-8, Waste Minimization

8.0 RECORDS

The field team leader is responsible for transmittal of all records that result from the use of this procedure to the ER Records Processing Facility.

9.0 ATTACHMENTS

Attachment A: Chart For Use with the Modified Griess Reagent Spot Test for Explosives

Attachment B: Commonly Used Abbreviations with Corresponding Chemical Names of HE

UNCONTROLLED

Attachment A

CHART FOR USE WITH THE MODIFIED GRIESS REAGENT SPOT TEST FOR EXPLOSIVES

To use this chart, follow the instructions in the Procedure Section of this SOP.

HE	Reagent 1 Resultant Color Change	Reagent 3 Resultant Color Change
AN	None	None
HMX	None	Purple
NQ	None	None
NC	None	Purple
NG	None	Purple
PETN	None	Purple
RDX	None	Purple
TATB	Slight Orange	Less Orange
Tetryl	Black-Red	Less Color
TNT	Black-Purple	Less Color

UNCONTROLLED

Attachment B

COMMONLY USED ABBREVIATIONS WITH CORRESPONDING CHEMICAL NAMES OF HE

HE Abbreviation	Chemical Names
AN	Ammonium nitrate
HMX	Homocyclonite, an aliphatic nitramine
NQ	Nitroguanidine
NC	Nitrocellulose
NG	Nitroglycerine
PETN	Pentaerythrol tetranitrate
RDX	Hexogen. Cyclo-1,3,5-trimethylene-2,4,6-trinitramine
TATB	Triaminotrinitrobenzene
Tetryl	Trinitro-2,4,6-phenylemethylnitramine
TNT	Trinitrotoluene

UNCONTROLLED

Los Alamos National Laboratory **Environmental Restoration Program** **Standard Operating Procedure**	No: LANL-ER-SOP-10.07 Rev: 0

Field Monitoring for Surface and Volume Radioactivity Levels

Prepared by	JOHN MANN (Print Name)	(Signature)	7-21-94 (Date)
Quality Review by	Patricia F. Goulding (Print Name)	(Signature)	9/2/94 (Date)
Technical Review by	(Print Name)	(Signature)	7/21/94 (Date)
PM Approval	JORG JANSEN (Print Name)	(Signature)	9-14-94 (Date)
QPPL Approval	LAWRENCE A. SOUZA (Print Name)	(Signature)	9/5/94 (Date)

Effective Date: 9/20/94

UNCONTROLLED

FIELD MONITORING FOR SURFACE AND VOLUME RADIOACTIVITY LEVELS

Contents

1.0 PURPOSE 2

2.0 SCOPE 2
2.1 Applicability 2
2.2 Training 2

3.0 DEFINITIONS AND ACRONYMS 3

4.0 BACKGROUND AND/OR CAUTIONS 3
4.1 Determining Radiation Value 3
4.1.1 Surface Contamination 4
4.1.2 Bulk or Volume Contamination 5

5.0 EQUIPMENT 5

6.0 PROCEDURE 5
6.1 Determination of Background Radioactivity 5
6.2 Calculation of Minimum Detectable Activity 6
6.3 Calculation of Decision Amount 6
6.4 Determination of Surface Radioactive Contamination 7
6.5 Determination of Bulk or Volume Radioactive Contamination 7

7.0 REFERENCES 8

8.0 RECORDS 8

9.0 ATTACHMENTS 8

UNCONTROLLED

FIELD MONITORING FOR SURFACE AND VOLUME RADIOACTIVITY LEVELS

1.0 PURPOSE

This procedure describes the process of monitoring potentially contaminated equipment, and materials, including waste, through both field counting of smear survey samples for removable contamination, and direct field surveys for fixed (and/or total) contamination.

2.0 SCOPE

2.1 Applicability

This standard operating procedure (SOP) is applicable to the use of field instruments for determining radioactive contamination in Environmental Restoration (ER) Project wastes. These wastes include those generated during Resource Conservation and Recovery Act (RCRA) facility investigations, RCRA closures, corrective actions, and decontamination and decommissioning. Specifically, this SOP is applicable to the determination of the presence or absence of surface radioactive contamination and the presence (but not the absence) of volume or bulk radioactive contamination. The absence of volume radioactive contamination will be determined using laboratory analyses or equivalent methods or more sensitive field techniques that may be developed in the future. A radiological control technician (RCT) will make the radioactivity determinations described in this SOP.

Field screening may not be appropriate and laboratory analyses not feasible for characterizing certain items, such as the interior of liquid drum samplers or plastic tubing used to convey groundwater during the purging, sampling, or development of monitor wells. These types of items will be characterized for radioactivity as described in the site-specific Waste Management Plan.

2.2 Training

The Field Team Manager (FTM) or equivalent is responsible for ensuring proper implementation of this SOP. The FTM also must ensure that he or she and all RCTs document that they read and understand this SOP, the other applicable SOPs in Section 1.0, General Instructions, of the Los Alamos National Laboratory's (the Laboratory's) ER SOP, the associated Laboratory Administrative Requirements, and the Laboratory's Standards and Procedures.

The RCTs must meet the qualification requirements specified in the Laboratory's Radiological Control (RadCon) Manual, Chapter 6, Part 4, Paragraph 641 through 645. Group ESH-1 RCTs and subcontractors with ESH-1 approval are considered to meet the RadCon Manual requirements. The RCTs must receive on-the-job training prov ided by ESH-1 for making the radioactivity determinations and using the survey instruments/detectors.

UNCONTROLLED

Training documentation includes: 1) a list of RCTs authorized by ESH-1 to make the radioactivity determinations; 2) date of completed training; 3) signature sheet indicating each RCT's review of this SOP; and 4) signature sheet certifying completion of the on-the-job training and use of the instruments/detectors.

3.0 DEFINITIONS AND ACRONYMS

1. Background: Radiation from radioactive material other than that resulting from Department of Energy (DOE) operations at the Laboratory. This includes radiation from cosmic rays and from naturally occuring radioactive materials in the earth and building materials including radon (except as a decay product source or special nuclear material); and global fallout as it exists in the environment from the testing of nuclear explosive devices. Background is determined using statistically sound methods of sampling and sample counting (see Section 6.1).

2. Decision Amount (DA): The decision amount is the activity level above which the waste material is considered "radioactive" at an acceptable confidence level.

3. MDA: Minimum detectable activity: A statistical technique developed to establish radioactivity detection capabilities.

4.0 BACKGROUND AND/OR CAUTIONS

4.1 Determining Radiation Value

Deciding whether waste or other material is contaminated with radioactivity requires that radiation detection instruments be used to determine the background count in the vicinity of the waste or other material; this count must then be compared with the count of a sample of the material in question. The sample count must have a certain value above the background count in order to be called "radioactive" with an agreed-upon degree of certainty or confidence that the result is correct. Likewise, if the sample count is less than this certain value, it is called "non-radioactive" (or "at background") with the same degree of confidence.

This certain value is called the minimum detectable activity (MDA). For radioactive waste determinations, the MDA value must be within a factor of 2 to 3 of the DA to satisfy current DOE/AL Waste Moratorium requirements that waste for off-site disposal contain "no radioactivity (other than naturally occuring)."

Currently used field-counting techniques do not have an MDA value that is low enough to make this determination; it must be made in the laboratory where background count rates are low, counting times are long, and the MDA of the method is likewise low. In the field, the only decision that can be made currently (other than by knowledge of process) is that the waste is either radioactive or it is "potentially" radioactive. This decision amount (DA) is the activity level above

UNCONTROLLED

which the waste is considered to be radioactive. The DA means that a sample count greater than the DA can be called "radioactive" with the agreed-upon level of confidence, but that counts less than the DA can only be called "potentially radioactive," rather than "non- radioactive." The DA value is typically two or three times less than the MDA.

DOE defines waste as non-radioactive if it contains no measurable increase in radioactivity (at a statistically defined confidence interval) *above background in volume or bulk* resulting from DOE operations at the Laboratory and contains no surface radioactivity above the limits specified in DOE Order 5400.5, II.5.c.(1) and (DOE Draft Order 5820.2B). Therefore, bulk- or volume-contaminated wastes will be classified as radioactive if the wastes are above the Laboratory background levels in the vicinity. Surface contaminated wastes will be classified as radioactive if the wastes are above the surface radioactivity limits in DOE Order 5400.5, II.5.c.(1).

4.1.1 Surface Contamination

DOE allows the release of material and equipment for unrestricted use if the items have surface contamination below specific levels listed in the DOE Order 5400.5, Fig. IV-1, as modified by the U.S. Atomic Energy Commission Regulatory Guide 1.86 for Transuranic Radionuclides (see table in Attachment A). This approach will be applied to potentially surface-contaminated ER Project wastes. The wastes will be classified as radioactive if the wastes are above the DOE criteria. The wastes will be classified as "uncontaminated" and can be considered as non-radioactive if the wastes are below the DOE criteria.

The decision of whether a smear sample or a direct measurement of a surface is contaminated is based on the relative counts obtained on the instrument compared with background and blank sample count rates. The level of radioactivity at which this decision is made has to be below the contamination guidelines shown in Attachment A so that material may be released for unrestricted use with a high degree of confidence that it is not contaminated and, likewise, that if it is contaminated it will not be judged as non-contaminated with the same degree of confidence. This decision level is defined in this procedure as the MDA of each instrument used to measure the type of radiation emitted by the isotopes in question.

To determine if surface contaminated wastes are radioactive, the MDA must be calculated and the counting times adjusted to ensure that the instrument is capable of detecting radioactivity at levels less than the amounts in Attachment A with a high degree of confidence. This determination is based upon measurement with a field instrument having a standard MDA at the 95% confidence interval below the levels required by DOE Order 5400.5.

UNCONTROLLED

4.1.2 Bulk or Volume Contamination

To determine if the waste bulk or volume is contaminated with radioactivity, the following information is required:

- The background must be determined either from an uncontaminated location at the measurement site or in the laboratory using an uncontaminated soil or other waste sample taken from the waste site. (See Section 6.1.)

- The DA must be calculated for the radiological field instrument.

The radioactivity status is determined by calculating the DA using the counts measured with a radiation survey meter. The DA is measured at the 95% confidence level as described in Section 6.4 below. If the radioactivity levels are above the DA, the wastes will be classified as radioactive. However, if radioactivity levels are below the DA, wastes potentially contaminated with bulk radioactivity cannot be considered to be non-radioactive. These wastes will be classified as potential radioactive waste, unless the wastes or environmental samples associated with the wastes are analyzed by a laboratory or equivalent method or more sensitive field methods.

Field instruments normally will not have a sufficiently low MDA to make a confident non-radioactive determination for wastes bulk-contaminated with radioactivity. This determination requires analytical methods with greater sensitivity, such as those used by environmental laboratories. In the near-future, field methods having greater sensitivity may be developed and used to characterize wastes for bulk radioactive contamination.

UNCONTROLLED

5.0 EQUIPMENT

Types of instruments that may be used for this procedure are listed in Attachment B.

6.0 PROCEDURE

6.1 Determination of Background Radioactivity

A. Collect several representative samples of known uncontaminated waste material or soil from the site vicinity and either have them analyzed in the lab or count them in the field, for background samples. The number of samples required depends upon the volume of waste or soil to be measured for radioactivity. This process is used for potentially contaminated bulk waste that can be readily sampled, such as soil.

B. For lab measurements, the samples are appropriately prepared and then counted in radiation counters several times a day for several days until an acceptable confidence level has been attained. This result, the

background count, is used by the laboratory for an MDA determination from which the "radioactive or not" decision on the actual sample is made.

C. Where field methods with adequate MDAs are available, the background samples are counted in the field, and an acceptable MDA is attained, this result is the background count, "B", that is used in the MDA equation. If only screening is to be done, then the background count "B" is used in the DA equation.

6.2 Calculation of Minimum Detectable Activity

A. Determine the MDA of each survey instrument using the following calculation from Brodsky 1991:

$$MDA = \frac{2.71+4.65\sqrt{Bt}}{t \bullet E\left(\frac{A}{100}\right)}$$

where:

MDA = Minimum Detectable Activity in dpm/100cm^2
B = Background (zero activity sample) Count Rate in cpm
t = Sample Counting Time in minutes
E = Detector Efficiency
A = Detector Active Area in cm^2

B. Determine the count rate of a blank (zero-activity) smear or an uncontaminated object similar to the one to be surveyed.

C. Calculate the MDA for each instrument/detector combination using the form in Attachment C.

D. If the instrument MDA is determined to be above the Attachment A value for the activity being measured, then increase the counting time or the detector active area until the MDA is less than the values in Attachment A.

6.3 Calculation of Decision Amount

A. Determine the DA using the following calculation from Brodsky 1991:

$$DA = \frac{2.33\sqrt{Bt}}{t \bullet E\left(\frac{A}{100}\right)}$$

UNCONTROLLED

where:

DA = The decision amount in dpm/100cm^2
B = Background (zero activity sample) count rate in cpm
t = Sample counting time in minutes
E = Detector efficiency
A = Detector active area in cm^2

B. Determine the count rate of a zero activity sample by counting a known "clean" waste object or soil sample of the same type as the waste to be measured. Calculate the DA for each instrument using the form in Attachment C.

6.4 Determination of Surface Radioactive Contamination

A. Remove any bulk or volume contamination (i.e., soil, mud) from waste equipment or items, if practical. Refer to ESH-1-02-02, Rev. 1, for details. Calculate the MDA of each survey instrument as described in Section 6.2. If the MDA is less than the values in Attachment A, use the "removable" or "average" values in Attachment A as described below. If the instrument readings are less than the values in Attachment A, classify the wastes as non-radioactive.

B. Determine the removable contamination levels by smearing and following the technique described in Section 7.2 of the Laboratory Procedure ESH-1-02-02. If levels are above the "removable" levels in Attachment A, decontaminate before proceeding with direct measurements.

C. If removable contamination levels are less than the Attachment A amounts, determine the direct contamination levels by following Section 7.1 of the Laboratory Procedure ESH-1-02-02. If the direct contamination levels are greater than the "average" levels in Attachment A, classify the items as radioactive; if the levels are less than the average levels, the item is non-radioactive.

6.5 Determination of Bulk or Volume Radioactive Contamination

A. Once the background has been calculated, calculate the DA (Section 6.3) for each survey instrument.

B. Survey the waste to determine the bulk radioactive contamination levels. If the radioactive levels are above the DA of the instrument, classify the waste as radioactive. If the radioactivity levels are below the DA, classify the waste as potential radioactive until laboratory or equivalent methods or more sensitive field techniques can determine the radioactivity status of the waste.

UNCONTROLLED

C. If a technique with an adequate MDA is in place in the field, calculate the MDA (Section 6.2) using the calculated background and proceed to measure the samples for which the radioactive decision is to be made.

7.0 REFERENCES

A. Brodsky, R.G. Gallaghar, "Statistical Considerations in Practical Contamination Monitoring," Radiation Protection Management, Vol. 8, No. 4, 1991.

Los Alamos National Laboratory, "Surveying for Alpha and/or Beta/Gamma Contamination," Environment, Safety and Health Procedure ESH-1-02-02, March 4, 1994.

LANL, "Radiological Control Manual," Chapter 6, Part 4, Paragraph 641 through 645, March 1994.

LANL, "Final RMMA Program Plan," May 20, 1994.

U.S. Atomic Energy Commission, "Termination of Operating Licenses for Nuclear Reactors," Regulatory Guide 1.86, June 1974.

U.S. Department of Energy/Albuquerque, "Performance Objective for the Waste Moratorium," 1993.

U.S. Department of Energy, "Radiation Protection of the Public and the Environment," Order 5400.5, 1988.

U.S. Department of Energy, "Waste Management," Draft Order 5820.2B, 1994.

UNCONTROLLED

8.0 RECORDS

During implementation of this SOP, the form for the Determination of DA and MDA (Attachment C) will be completed. This form is found in Attachment C. Copies of the completed form must be sent to the Record Processing Facility, MS M707.

9.0 ATTACHMENTS

Attachment A - Surface Contamination Levels
Attachment B - Typical Field Instruments and Detectors
Attachment C - Determination of DA and MDA

Los Alamos National Laboratory Environmental Restoration Project
SURFACE CONTAMINATION LEVELS

Nuclide	D/M/100cm^2 Remove[1]	Average[2]	Max.
U-nat, ^{235}U, ^{238}U, & assoc. decay products	1,000α	5,000	15,000
TRU, ^{226} and ^{228}Ra, ^{230} and ^{228}Th, ^{231}Pa, ^{227}Ac, ^{125} and ^{129}I	20[3]	100[3]	300[3]
Th-nat, ^{232}Th, ^{90}Sr, ^{223}Ra, ^{224}Ra, ^{232}U, ^{126}, ^{131} and ^{133}I	200α	1,000	3,000
Tritium; Beta-gamma emitters except ^{90}Sr, others above	1,000β–γ	5,000	15,000

1. Removable limit is used for smear samples.
2. Average limit is used for direct measurement of surface contamination.
3. Values taken from NRC Reg Guide 1.86, all other values are from DOE Order 5400.5, Figure IV-1.

UNCONTROLLED

Los Alamos National Laboratory Environmental Restoration Project
TYPICAL FIELD INSTRUMENTS AND DETECTORS

Instrument	Typical Background	Typical % Efficiency	
Ludlum Model 2221 Scaler/Ratemeter, used with Ludlum Model 44-9 Pancake G-M for β–γ detection	50-75 cpm	5	^{14}C
		22	^{90}Sr
		19	^{99}Tc
		35	^{32}P
Ludlum Model 2221 Scaler/Ratemeter, used with Ludlum Model 43-5 Alpha Scintillation Detector	0.1-4 cpm	12-14	
Ludlum Model 1000 Scaler, used with Ludlum Model 43-10 Alpha Tray Counter	0.2-0.5 cpm	30-35	

UNCONTROLLED

Los Alamos National Laboratory Environmental Restoration
DETERMINATION OF DA AND MDA

Date:_____

Technical Area_____

Operable Unit_____

Calibration procedures must be approved by ESH-4. Calibration results must be within acceptable parameters prior to using a specific instrument to document unrestricted release of materials and equipment. Declaration of waste as "non-radioactive" must be documented with appropriate laboratory or enhanced field analyses.

Instrument Type_____

Model Number_____

Serial Number_____

Calibration Date_____

Surveyor_____
(Print Name) Group

_____
(Signature) Date

Background Count Rate _____cpm (B)
Background (or sample) Counting Time _____min. (t)
Detector Efficiency _____(E)
Detector Active Area _____cm^2 (A)

Calculate minimum detectable Activity (MDA)

$$MDA = \frac{2.71+4.65\sqrt{Bt}}{t \cdot E\left(\frac{A}{100}\right)} = \_\_\_\_\_ \text{dpm/100 cm}^2$$

Calculate Decision Amount (DA)

$$DA = \frac{2.33\sqrt{Bt}}{t \cdot E\left(\frac{A}{100}\right)} = \_\_\_\_\_ \text{dpm/100 cm}^2$$

Calculations Checked by:_____
(Print Name) Group

_____
(Signature) Date

UNCONTROLLED

Los Alamos National Laboratory Environmental Restoration Project Standard Operating Procedure	No: LANL-ER-SOP-10.08, R0	Rev: 0

OPERATION OF THE SPECTRACE 9000 FIELD-PORTABLE X-RAY FLUORESCENCE INSTRUMENT

Prepared by	Linda Fluk (Print Name)	(Signature)	6/2/95 (Date)
Quality Review by	PATRICIA M TILLERY (Print Name)	(Signature)	6/26/95 (Date)
Technical Review by	(Print Name)	(Signature)	6/13/95 (Date)
QPPL Approval	LAWRENCE A. SOUZA (Print Name)	(Signature)	8/11/95 (Date)
PM Approval	Jörg Jansen (Print Name)	(Signature)	8-15-95 (Date)

Effective Date: 8/23/95

UNCONTROLLED

OPERATION OF THE SPECTRACE 9000 FIELD-PORTABLE X-RAY FLUORESCENCE INSTRUMENT

Contents

1.0 PURPOSE 2

2.0 SCOPE 2
- 2.1 Application 2
- 2.2 Training 2

3.0 DEFINITIONS 2

4.0 BACKGROUND AND CAUTIONS 2
- 4.1 Background 2
- 4.2 Cautions 3

5.0 EQUIPMENT 4

6.0 PROCEDURE 4
- 6.1 Initial Operation 4
- 6.2 Preoperational Checks 5
- 6.3 Sample Handling and Presentation 5
  - 6.3.1 Soil Samples Application 6
    - 6.3.1.1 In situ Measurement 6
    - 6.3.1.2 Bench-top Measurement 6
  - 6.3.2 Thin (Filter) Samples Application 6
  - 6.3.3 Lead in Paint Application 6
- 6.4 Recording and Documenting Results 6

7.0 REFERENCES 7

8.0 RECORDS 7

9.0 ATTACHMENTS 8

UNCONTROLLED

OPERATION OF THE SPECTRACE 9000 FIELD-PORTABLE X-RAY FLUORESCENCE INSTRUMENT

1.0 PURPOSE

This procedure describes the methods for the operation, calibration, and routine use of the Spectrace 9000 field-portable x-ray fluorescence (XRF) instrument for field screening applications by personnel at Los Alamos National Laboratory (Laboratory).

2.0 SCOPE

2.1 Application

This standard operating procedure (SOP) outlines the operation and use of the Spectrace 9000 field-portable XRF analyzer in screening for hazardous or potentially hazardous inorganic materials. The data generated allow rapid evaluation of the extent of contamination. Samples can be analyzed for elements of atomic number 13 (aluminum) through 92 (uranium) with proper x-ray source selection and instrument calibration. Environmental applications include elemental metals in soils and on filters and lead in paint.

2.2 Training

Personnel using the field-portable XRF must read and follow instructions in the manufacturer's operating manual. Personnel may also refer to Spectrace 9000 Field-Portable/Benchtop XRF Training and Applications Manual and US Environmental Protection Agency SOP for the Spectrace 9000. Personnel using the XRF must be enrolled in the Laboratory health physics program and must wear a dosimetry badge.

UNCONTROLLED

3.0 DEFINITIONS

A. X-ray fluorescence spectroscopy: A nondestructive qualitative and quantitative analytical technique used to determine the elemental composition of solid, liquid, thin film and powder samples.

4.0 BACKGROUND AND CAUTIONS

4.1 Background

The Spectrace 9000 energy-dispersive field-portable XRF includes three compact sealed radioactive sources: iron (^{55}Fe), cadmium (^{109}Cd), and americium (^{241}Am). The instrument is equipped with a high-resolution HgI_2 detector, which is connected to a sealed electronic module.

The electronic unit provides internal nonvolatile memory for storage of 120 spectra and 300 multielement analysis results, which can be shown on the instrument's display panel. An RS-232C serial port allows users to download data and spectra to a peripheral device, such as a printer or IBM-compatible personal computer.

The Spectrace 9000 can be powered from a 115-/220-V wall outlet or from its 4-hour rechargeable battery. The device can be operated in temperatures ranging from 32 F to 120 F. Furthermore, the probe and electronic unit may be exposed to a light rain; additional protection is provided when the system (electronic unit and probe) is contained in the optional water-repellent carrying case.

4.2 Cautions

A. Probes. The probe battery should be replaced once every six months. This requires the top of the probe to be opened. Otherwise, the probe should remain closed and covered with the safety cover, laboratory safety cover, or laboratory safety shield when not in use.

B. Probe use. The probes should always be in contact with the surface of the material being analyzed, and that material should completely cover the probe opening (aperture) when the sources are exposed. The probe laboratory safety shield assembly must be used when the probe is inverted for measuring samples contained in cups. Do not remove a sample or move the probe while the message Source On is displayed on the screen or the base of the probe is flashing. During operation, the probe must be kept at least 6 ft from computer monitors and any other source of radio frequency, which will affect measurement results.

C. Sources. When the sources are exposed, under no circumstances should the probe be pointed at the operator or surrounding personnel. Do not place any part of the operators' or co-workers' bodies in line of exposure when the sources are exposed or partially covered.

NOTE: For safety precautions, personnel should keep a distance from the probe while the sources are exposed and active. If personnel are exposed to radiation from the probe while the sources are active, immediately shut off the sources by pushing the CONT button on the instrument.

D. Instrument integrity. Spectrace Instruments must be notified immediately of any condition or concern relative to the probe's structural integrity, source shielding, source switching condition, or operability. The appropriate state agency or the US Nuclear Regulatory Commission office must be notified immediately of any damage to the radioactive source or any loss or theft of the device.

E. Labels and certifications. Labels or instructions on the probe(s) must not be altered or removed. The source(s) in the probe must be leak-tested every 6 months, and the leak-test certificates must accompany the instrument at all times.

F. Handling. The Spectrace 9000 should not be dropped or exposed to conditions of excessive shock or vibration. The probe cable must never be pulled while unplugging the probe. The probe plug should be grasped at the ribbed metal connector and squeezed and pulled gently while the

UNCONTROLLED

connector is unplugged. The connector must never be forcibly plugged in. The handle of the electronic unit must not be rotated unless the release buttons on the side of the handle are depressed. The Spectrace 9000 should not be stored at an ambient temperature below -4F or above 110F.

G. Transport. The Spectrace 9000 must be properly packaged during transport. The suitcase that accompanies the unit is acceptable.

DOT requires that the following statement accompany the unit during transportation: This package conforms to the conditions and limitations specified in 49 CFR 173.422 for acceptable radioactive material, instruments, and articles, UN 2910.

H. Electronic unit. The probe cable must be connected before switching on the power, or the detector may be damaged.

UNCONTROLLED

5.0 EQUIPMENT

The following equipment is included with the Spectrace 9000 XRF

- Analyzer unit for data acquisition, processing, and display
- Hand-held probe, including high-resolution HgI_2 detector, three excitation sources (^{55}Fe, ^{109}Cd, ^{241}Am), and a safety cover
- Probe laboratory base stand with safety shield
- Interconnecting cable
- RS-232C serial I/O interface cable and connector
- Blank checks and pure-element check samples
- Spectrace 9000 application software. This software, which is device-specific and noninterchangeable, is identified by the serial number of the unit.
- XRF sample cups
- X-ray film

6.0 PROCEDURE

Personnel should follow the procedures discussed in the manufacturers operating manual, training manuals, and updates (including the Standard Operating Check, Aug. 15, 1994). All data results must be recorded either in an instrument logbook or daily activity log according to instructions in LANL-ER-SOP-01.04, Sample Control and Field Documentation.

6.1 Initial Operation

A. Connect the battery.
B. Turn the unit on.
C. Set the time and date.
D. Allow the Spectrace 9000 to warm up for approximately 30 minutes.
E. Set desired application (soil, thin filter, lead in paint).
F. Set measuring times for radioactive sources.

NOTE: Measuring times depend on the elements of interest as well as the desired detection limits. Minimum measuring time for each source should

be 20 seconds. Refer to Attachment A for manufacturers guidances on elements excited by radioactive sources and detection limits.

G. Set time as real or live.
H. Disable the display threshold.
I. Set instrument to automatically store results and spectra (optional)

6.2 Preoperational Checks

Refer to the Spectrace 9000 training manual and Standard Operating Check, Aug 15, 1994 for detailed procedures on preoperational checks.

A. Perform element x-ray response and spectrum resolution check using the Fe blank at least once a day. Record results in the Field or Instrument Logbook.

- If intensities are outside the specified range, refer to the Standard Operating Check. An energy calibration may be performed.

- If the Kev value noted in the spectra of the energy calibration check are out of range, refer to the Standard Operating Check. An energy calibration may be performed.

B. Perform analytical background check with the teflon blank at least once a day. Record results in the Field or Instrument Logbook.

If the element concentrations are greater than 5 times the standard deviation, refer to the Standard Operating Check. Acquire Background procedure may be performed.

C. At least once a day the operator should analyze two Standard reference materials (e.g. NIST SRM 2710 or 2711) or performance evaluation samples whose metal concentrations bracket the known or suspected metal concentrations of the samples to be measured. Record results in the Field or Instrument Logbook to note significant trends in the analytical measurement.

D. Determine the precision for approximately 1 per every 20 samples by making repeat measurements ($\geq$5) of a sample at or near the action level of the elements of concern. Conduct this measurement under the same conditions as those used for sample measurements. Record results in the Field or Instrument Logbook. The precision objective should be 20% relative standard deviation.

6.3 Sample Handling and Presentation

The following are recommended procedures for handling and preparing the samples.

UNCONTROLLED

6.3.1 Soil Samples Application

Soil samples may be analyzed either in situ or in bench-top mode.

6.3.1.1 In situ Measurement

A. Prepare soil by moving around with a trowel (or similar utensil).
B. Remove rocks, vegetation, or large objects. Soils may be sieved.
C. Flatten area with a trowel (or similar utensil).
D. Place the probe securely against the flattened soil surface.
E. Secure the probe to ensure that it will not be moved or topple over.
F. Push trigger button on the probe or the CONT button on instrument to initiate the measurement.

6.3.1.2 Bench-top Measurement

A. Dry the soil.
B. Grind the soil until desired homogeneity is obtained.
C. Put the soil into a sample cup and seal with x-ray film.
D. Push trigger button on the probe or the CONT button on the instrument to initiate the measurement.

6.3.2 Thin (Filter) Samples Application

A. Mount the filter and place on probe. (Filters should be presented loaded side down and wrinkle-free.)
B. Use the probe safety cover when measuring thin samples.
C. Filters and wipes should be visually prescreened for defects before use to establish background and contamination levels.

6.3.3 Lead in Paint Application

A. The area selected for analysis should be smooth, representative, and free of surface dirt.
B. Hold the Spectrace 9000 probe firmly on the surface.
C. When used for specimen applications (e.g., on paint chips or nonbacked films), use the probe safety cover.

6.4 Recording and Documenting Results

A. ER decision data must be transferred to FIMAD following peer review. This is done using the 4D or ACCESS system. Results for a blank and a check standard should also be reported.
B. Results (and Spectra) may be automatically stored. Refer to the manufacturers operating manual.
C. It is recommended that results be downloaded to a personal computer at the end of each day. Refer to the Spectrace 9000 Training and Applications Manual.

UNCONTROLLED

D. Results may be transferred to a spreadsheet.
E. If data is qualitative, i.e. used only for general surveys or to bias sampling, data may be handled informally and recorded in the field or instrument log book or perhaps not recorded at all.

7.0 REFERENCES

EPA (U.S. Environmental Protection Agency), November 1991. "Representative Sampling Guidance, Volume 1 - Soil," (OSWER Directive 9360.4-10), EPA Environmental Response Team, Washington, DC.

EPA (U.S. Environmental Protection Agency) , December 21, 1992. Spectrace 9000 Field Portable X-ray Fluorescence Operating Procedure (SOP 1713), Environmental Response Team Response Engineering and Analytical Contract Standard Operating Procedures, Washington, DC.

LANL-ER-SOP-01.01, General Instructions for Field Investigations.

LANL-ER-SOP-01.04, Sample Control and Field Documentation.

NIST (National Institute of Standards & Technology), October 30, 1992. Standard Reference Material 2710, Montana Soil, Highly Elevated Trace Elements Concentrations, Certification of Analysis, National Institute of Standards & Technology, Gaithersberg, Maryland.

NIST (National Institute of Standards & Technology), October 30, 1992. Standard Reference Material 2711, Montana Soil, Moderately Elevated Trace Elements Concentrations, Certification of Analysis, National Institute of Standards & Technology, Gaithersberg, Maryland.

TN Spectrace, 2555 N. IH 35, P.O. Box 800, Round Rock Texas, 78680-0800, (800) 736-0801.

TN Technologies, Inc, Spectrace 9000 Portable XRF Analyzer Manufacturers Operator Manual, Part No. 717715, Rev.II, August 1994.

TN Technologies, Spectrace 9000 Standard Operating Check, August 15, 1994.

TN Technologies, Spectrace 9000 Training and Applications Manual, 1994.

8.0 RECORDS

Completed Daily Activity Log or Instrument Logbook, should include the following information:

- Record that the leak test has been performed
- Element X-ray response check
- Analytical background check
- Standards check
- Precision results
- Energy calibration

UNCONTROLLED

- Performance evaluation
- Sample preparation
- Measurement time for each radioactive source
- Sample results

The Field Team Leader is responsible for transferring the records generated under this procedure to the Environmental Restoration Records Processing Facility.

9.0 ATTACHMENTS

Attachment A — Elements excited by radioactive sources and lower limits of detection for these elements.

UNCONTROLLED

Los Alamos National Laboratory Environmental Restoration Project
ELEMENTS EXCITED BY RADIOACTIVE SOURCES
AND LOWER LIMITS OF DETECTION FOR THESE ELEMENTS

For Soil Samples application using a source measuring times of 60 sec. and 200 sec., the following are typical element minimum detection levels (MDL):

Source	Element	60 sec. MDL (mg/kg)	200 sec. MDL (mg/kg)
^{55}Fe	Potassium (K)	325	140
	Calcium (Ca)	150	75
	Titanium (Ti)	110	65
	Chromium (CrLo)	180	117
^{109}Cd	Chromium (CrHi)	525	345
	Manganese (Mn)	410	320
	Iron (Fe)	225	155
	Cobalt (Co)	205	138
	Nickel (Ni)	125	95
	Copper (Cu)	90	55
	Zinc (Zn)	70	50
	Mercury (Hg)	60	50
	Arsenic (As)	50	35
	Selenium (Se)	35	25
	Lead (Pb)	30	20
	Rubidium (Rb)	10	10
	Strontium (Sr)	10	5
	Zirconium (Zr)	10	3
	Molybdenum (Mo)	10	4
^{241}Am	Cadmium (Cd)	180	90
	Tin (Sn)	100	50
	Antimony (Sb)	65	35
	Barium (Ba)	20	10
	Uranium (U)	100	60
	Thorium (Th)	100	60
	Silver (Ag)	100	60

UNCONTROLLED

Los Alamos National Laboratory Environmental Restoration Project
ELEMENTS EXCITED BY RADIOACTIVE SOURCES
AND LOWER LIMITS OF DETECTION FOR THESE ELEMENTS
(Continued)

For Thin Samples application using a source measuring time of 200 sec. for the ^{55}Fe and ^{109}Cd sources, and 800 sec. for the ^{241}Am source, the following are typical element MDLs:

Source	Element	MDL ((g/cm^2))
^{55}Fe	Potassium (K)	0.40
	Calcium (Ca)	0.20
	Titanium (Ti)	0.15
	Chromium (CrLo)	0.40
^{109}Cd	Chromium (CrHi)	0.90
	Manganese (Mn)	0.65
	Iron (Fe)	0.65
	Cobalt (Co)	0.50
	Nickel (Ni)	0.50
	Copper (Cu)	0.65
	Zinc (Zn)	0.40
	Mercury (Hg)	0.45
	Arsenic (As)	0.40
	Selenium (Se)	0.15
	Lead (Pb)	0.50
	Rubidium (Rb)	0.10
	Strontium (Sr)	0.10
	Zirconium (Zr)	0.15
	Molybdenum (Mo)	0.10
^{241}Am	Cadmium (Cd)	2.5
	Tin (Sn)	2.5
	Antimony (Sb)	1.5
	Barium (Ba)	0.70

UNCONTROLLED

Los Alamos National Laboratory Environmental Restoration Project Standard Operating Procedure	No: LANL-ER-SOP-10.10	Rev: 0

RADIATION SCOPING SURVEYS

Prepared by	JOHN MANN (Print Name)	(Signature)	6-20-95 (Date)
Quality Review by	PAT GOULDING (Print Name)	(Signature)	6-20-95 (Date)
Technical Review by	PAT LA FRATE (Print Name)	(Signature)	8/15/95 (Date)
QPPL Approval	LAWRENCE A. SOUZA (Print Name)	(Signature)	11/20/95 (Date)
PM Approval	JORG JANSEN (Print Name)	(Signature)	11-21-95 (Date)

Effective Date: 11/27/95

UNCONTROLLED

RADIATION SCOPING AND BACKGROUND SURVEYS

Contents

1.0 PURPOSE 2

2.0 SCOPE 2
- 2.1 Applicability 2
- 2.2 Training 2

3.0 DEFINITIONS AND ACRONYMS 2

4.0 BACKGROUND AND/OR CAUTIONS 3
- 4.1 Scoping Surveys 3
- 4.2 Background Surveys 3

5.0 EQUIPMENT 4
- 5.1 Survey Equipment for Soil Suspected of Plutonium or Americium Contamination 4
- 5.2 Survey Equipment for Other Gamma-Ray Radioisotope Contaminants 4

6.0 PROCEDURE 4
- 6.1 Instrument Operational Checks 4
- 6.2 Background Measurements 4
- 6.3 Survey Point Radiation Measurements 5
- 6.4 Quality Assurance 5

7.0 RECORDS 5

8.0 REFERENCES 6

UNCONTROLLED

RADIATION SCOPING AND BACKGROUND SURVEYS

1.0 PURPOSE

This procedure describes the conduct of radiation scoping surveys as defined in the Nuclear Regulatory Commission's *Manual for Conducting Radiological Surveys in Support of License Termination.* These surveys are direct measurements of radiation exposure rates and surface activity levels to determine the extent of ground and soil contamination.

2.0 SCOPE

2.1 Applicability

This procedure applies to the use of field survey meters for determining surface soil radioactivity levels and general-area radiation exposure rates at Los Alamos National Laboratory (Laboratory) Environmental Restoration (ER) Project sites.

Part of the scoping survey consists of directly measuring exposure rates and surface activity levels in areas considered to be the most likely to contain residual activity from US Department of Energy (DOE) operations. After locations that may require decontamination have been identified, a characterization survey is performed to define more precisely the extent and magnitude of contamination.

2.2 Training

Radiation surveys are to be conducted only by qualified radiological screening personnel, health physics technicians, or radiation control technicians. Training requirements for these positions are specified in the generic ER Project Health and Safety Plan.

UNCONTROLLED

3.0 DEFINITIONS AND ACRONYMS

A. Characterization Survey: Facility or site sampling, monitoring, and analysis activities to determine the extent and nature of contamination. Characterization provides the basis for acquiring the necessary technical information to develop, analyze, and select appropriate cleanup techniques.

B. Scoping Survey: A survey conducted to identify which radionuclides are present as contaminants, the relative ratios in which they occur, and the general levels and extent of the contaminants.

4.0 BACKGROUND AND/OR CAUTIONS

4.1 Scoping Surveys

Site investigations require a standard method for instrumentation use and background determination in the conduct of radiation scoping surveys in the field.

General radiation-exposure measurements are made approximately 1 meter (m) above the ground surface at previously selected survey grid points to determine the relative exposure rate at the grid point. The absolute value of exposure rates obtained is not important.

This survey is *not* for health and safety purposes. Its purpose is to establish relative rates of radioactivity for making comparisons for sampling purposes; therefore, an accurate calibration with a certified source, although desirable, is not essential. (Health and safety surveys are done prior to the scoping survey to establish the need for radiological areas and personnel control measures).

Radiation surveys at the soil surface are made when low-energy gamma- and x-ray-emitting radioisotope contaminants (such as plutonium [Pu] and americium [Am]) is suspected to be in the soil. These surveys locate the areas where soil samples will be taken later for a *quantitative* measurement of the contaminant in the soil.

The technical requirements for determining background measurements and calculating the decision levels or applying these measurements to sample and survey point measurements are discussed in LANL-ER-SOP-10.07, Field Monitoring for Surface and Volume Radioactivity Levels.

4.2 Background Surveys

Background measurements must be made according to a strict process that takes into account the random variability in radiation levels from natural radioactivity at different locations and times in the Laboratory area.

Radiation background measurements are also made at the surface and at 1 m above the ground surface with the same instruments used for the survey point measurements. However, these measurements are made in locations *adjacent* to the survey area locations that are unaffected by the suspected contaminant or radiation source. The object of the survey is to compare a background with several survey grid points to see if there is a *net* activity or exposure value that indicates contamination from the previous DOE activity.

The background area used should be located as close as possible to a group of survey points and yet be far enough away so that the background is not influenced by possible contamination. This means that the background measuring points will retain their validity by moving with the survey points as the survey progresses

UNCONTROLLED

through its target area. This will also ensure that daily and location-dependent background variations will be considered.

5.0 EQUIPMENT

5.1 Survey Equipment for Soil Suspected of Plutonium or Americium Contamination

- Ludlum Model 2221 Scaler/Ratemeter
- Teledyne Isotopes (or equal) NAI(TI) FIDLER detector

5.2 Survey Equipment for Other Gamma-Ray Radioisotope Contaminants

- Ludlum Model 12 Survey Meter
- Ludlum Model 44-10 2 x 2 Gamma Scintillator

Other manufacturers' instruments equivalent to the above may be used.

6.0 PROCEDURE

6.1 Instrument Operational Checks

Before starting the survey, perform the operational checks on the instruments to be used for background and survey point measurements according to the ER-Health Physics Method procedure listed for that instrument.

6.2 Background Measurements

A. Using the Model 44-10 detector with the Model 12 survey meter, and the FIDLER with the Model 2221 Scaler/Ratemeter (if the FIDLER is to be used for the survey point scoping or characterization survey), do the following:

- Perform a general radiation survey around the perimeter of the area suspected of being contaminated to determine how close background measuring locations can be to the survey area without being affected by the suspected contamination. Establish several background measuring locations to be used as the selected survey points are measured.

- Take the first background measurement in the vicinity of the radiation survey starting point, using the same instrument (or both instruments) that will be used to measure the survey points. Hold the 44-10 at waist level (approximately 1 m above the ground). When the FIDLER is used, hold the detector probe face approximately 2 cm above the ground surface.

- If part of the survey area is covered with asphalt or some other artificial surface, make sure that the corresponding backgrounds are measured

UNCONTROLLED

over a similarly covered area. This will ensure that radiation from background activity in the area is similarly shielded in both areas.

B. As you progress through the survey area taking point measurements, take one background measurement approximately every hour by coming out of the survey area, going to the preselected background measuring location nearby, and taking a background measurement. This may require many exits from and reentrances to the survey area as the points are measured.

- Record each background measurement value on a data sheet, along with the group of survey point values to which it corresponds. The background values will each be subtracted from its corresponding series of survey point values when the data are analyzed.

- Subtract only one value from the corresponding survey point values if the background measurements are within ± 25% of each other (this means they are essentially equal). If a greater variation in background activity exists among the measurement points, use the appropriate background value for each group of survey points.

6.3 Survey Point Radiation Measurements

A. Measure each selected survey point using the same technique as in step A above. Record on the data sheet the count rate from the 44-10 detector (and the FIDLER, if used).

B. Approximately every hour, move to the nearby background location and take one measurement using the same technique as the survey point measurement. Record the value on the data sheet.

6.4 Quality Assurance

A. Check each field instrument with a standard check source, independent of the calibration source, before use. The value found for this check source must agree with the calibration source by ± 10%.

Enter all values measured for this check source (even those outside the 10% criteria) on the checksheets per LANL-ER-SOP-10.07 and the appropriate ER and ESH Division standard operating procedures (SOPs).

7.0 RECORDS

The technician conducting the survey completes the documentation and submits it to the Field Team Leader. The checksheets in LANL-ER-SOP-10.07 must be completed and managed in accordance with the procedure. The checksheets in the appropriate instrument operational check SOP must be completed in accordance with procedure requirements and copies sent to the ER Records Processing Facility.

UNCONTROLLED

8.0 REFERENCES

U.S. Nuclear Regulatory Commission, "Manual for Conducting Radiological Surveys in Support of License Termination", NUREG/CR-5849, June 1992.

LANL-ER-SOP-10.07, Field Monitoring for Surface and Volume Radioactivity Levels.

LANL-ER Project Generic Health and Safety, Plan R0, March 25, 1995.

LaFrate, P., "ER Project Health Physics Methods," LANL memorandum 95-ESH-1-ER/D&D-003. to Distribution, July 14, 1995.

UNCONTROLLED

STANDARD OPERATING PROCEDURE

Title:	Identifier:	Revision:	Effective Date:
SOIL SAMPLE FIELD SCREENING TO MEET RADIOACTIVE SAMPLE SHIPPING REQUIREMENTS	ER-SOP-10.11	0	3/12/98

ER PROJECT

APPROVALS FOR USE

Author's Name (Print):	Author's Signature:	Date:
Linnea Wahl	Linnea Wahl	3/2/98
Quality Program Project Leader's Name (Print)	**Quality Program Project Leader's Signature**	**Date:**
Larry Maassen	Larry Maassen	3/6/98

LOS ALAMOS NATIONAL LABORATORY

SOIL SAMPLE FIELD SCREENING TO MEET RADIOACTIVE SAMPLE SHIPPING REQUIREMENTS

Table of Contents

1.0 PURPOSE 2

2.0 SCOPE 2
2.1 Applicability 2
2.2 Training 2

3.0 DEFINITIONS AND ACRONYMS 3

4.0 BACKGROUND AND/OR CAUTIONS 3

5.0 EQUIPMENT AND MATERIALS 4
5.1 Equipment 5
5.2 Materials 5
5.3 Equipment Setup 5

6.0 PROCEDURES 5
6.1 Determination of Required Measurements 5
6.2 Instrument Operational Checks 6
6.3 Instrument Background Measurements 8
6.4 Instrument Efficiency Measurements 8
6.5 Minimum Detectable Concentration (MDC) Measurements 8
6.6 Soil Sample Measurements 11
6.7 Quality Assurance 16

7.0 REFERENCES 17

8.0 RECORDS 17

9.0 ATTACHMENTS 18

SOIL SAMPLE FIELD SCREENING TO MEET RADIOACTIVE SAMPLE SHIPPING REQUIREMENTS

1.0 PURPOSE

This procedure describes screening of soil samples to provide radioactivity data to meet Los Alamos National Laboratory (the Laboratory), US Department of Transportation (DOT), and International Air Transport Association (IATA)/International Civil Aviation Organization (ICAO) requirements for shipment to an offsite analytical laboratory. The purpose of this procedure is to qualitatively determine whether soil samples collected for the Laboratory's Environmental Restoration (ER) Project are considered radioactive for shipping purposes (that is, have gross radiation levels greater than 2000 pCi/g [74 Bq/g]). These data may also be supplied to contract laboratories as part of the information required to meet their license activity limits.

2.0 SCOPE

2.1 Applicability

This procedure applies to the use of field radiation detectors (described in Section 5.1) for determining gross levels of radioactivity in soil samples at the Laboratory's ER Project sites. (Other types of samples are not included in this procedure.) Radiation measurements are made to estimate total alpha, beta, and gamma radiation levels in the samples.

2.2 Training

Radiation surveys for determining compliance with shipping regulations are to be conducted only by qualified radiological screening personnel (RSPs), health protection technicians (HPTs), or radiation control technicians (RCTs). Qualification is documented by an ESH-1 radiological surveillance authorization agreement, as discussed in the ER Project Health and Safety Plan (HASP) and ESH-1 procedure ESH-1-01-03, Radiological Surveillance Authorization Agreement. Training requirements include reading LANL-ER-SOP-1.03, Handling, Packaging, and Shipping of Samples; reading this procedure; and completing a 1-hr, hands-on, procedure-specific training provided by an RSP, HPT, or RCT experienced in using this procedure. Fulfillment of these training requirements is documented on a training documentation form, in accordance with LANL-ER-AP-05.2, Determination, Completion, and Documentation of Environmental Restoration Worker Training.

3.0 DEFINITIONS AND ACRONYMS

A. DOT (US Department of Transportation): The organization that regulates the transportation of radioactive materials by carriers and shippers subject to 49 CFR 173 and Subpart I.

B. IATA (International Air Transport Association)/ICAO (International Civil Aviation Organization): Organizations that regulate the air transport of radioactive materials.

C. Curie (Ci): The quantity of radioactive material in which 3.7×10^{10} atoms disintegrate (are transformed) per second. It is the traditional unit for measuring radioactivity. A smaller unit, the picocurie (pCi), is 1×10^{-12} Ci or 2.22 disintegrations per minute (dpm).

D. Becquerel (Bq): The quantity of radioactive material in which one atom disintegrates (is transformed) per second. It is the International System (SI) unit for measuring radioactivity. 1 Bq is equal to 2.7×10^{-11} Ci or 27 pCi or 60 dpm.

4.0 BACKGROUND AND/OR CAUTIONS

For shipping purposes, samples with gross radiation levels greater than 2000 pCi/g (74 Bq/g) are considered radioactive. Most ER Project soil samples have gross radiation levels less than 500 pCi/g (18.5 Bq/g) and thus are not considered radioactive for shipping purposes. The quick, simple screening method described in this procedure allows identification of such samples.

The data obtained using this procedure include estimates of gross alpha, gross beta, and gross gamma radiation (including background radiation) in soil samples. Instrument readings are converted to a radiation screening value that is the maximum value for that sample, and results are recorded as a range to provide data for shipping purposes. If samples are estimated to be greater than 1000 pCi/g (37 Bq/g), they must be sent for more accurate measurement at an onsite laboratory (mobile or fixed) to further evaluate the sample.

This method incorporates a safety factor to minimize the probability that a sample is shipped incorrectly. The safety factor is approximately 2 at values less than 500 pCi/g (18.5 Bq/g). Samples with values of 500 pCi/g (18.5 Bq/g) or greater are sent for further evaluation, which increases the safety factor to 4.

The methods described in this procedure do not detect the low-energy beta radiation emitted by tritium. If tritium is a suspected contaminant at this site, samples must be sent to an onsite laboratory (mobile or fixed) for analysis for tritium.

This procedure is specific to the field radiation detectors listed in Section 5.0. If other models or other manufacturer's instruments are substituted, the procedure must be revised to provide instrument-specific activity-to-concentration comparisons. These comparisons can be developed by determining activity (in dpm) measured by a given instrument on soil in a specified geometry that contains a known concentration (in pCi/g) of an alpha-, beta-, or gamma-emitting radionuclide. Procedures for correlating instrument measurements to radionuclide content are provided in Attachment A.

Screening for alpha and beta radiation must be performed on soil that is visibly dry. If soil samples appear to be damp or wet, the moisture will attenuate the alpha and beta radiation and provide falsely low screening results. Samples must be protected from rain or snow. Damp or wet soil samples must, at a minimum, be left to air dry for 24 hours. If soil samples still appear to be wet after 24 hours of air-drying, it may be faster to screen these samples at an onsite laboratory (mobile or fixed) than to wait until they are visibly dry. (Alternatively, samples may be dried to a constant weight in an oven, if such equipment is available.)

Screening for alpha and beta radiation must be performed on soil that is homogenous. If the sample is not well mixed or comprises widely varying soil textures, alpha and beta radiation measurements made on the surface of the soil may not accurately reflect the radioactivity of the entire sample. In such a situation, consult the geologist assigned to the site to determine if this procedure is appropriate for the sample.

This procedure does not cover all shipping requirements. Other shipping requirements, as well as handling and packaging requirements for ER samples, are provided in LANL-ER-SOP-1.03, Handling, Packaging, and Shipping of Samples.

5.0 EQUIPMENT AND MATERIALS

NOTE: This procedure is specific to the instruments listed in this section. If other instruments are substituted, the procedure must be revised (see Attachment A).

5.1 Equipment

Ludlum Model 2221 scaler/ratemeter
Ludlum Model 43-1 ZnS scintillation alpha probe
Ludlum Model 44-10 2 x 2 NaI(Tl) scintillation gamma probe

Ludlum Model 44-40 shielded pancake GM beta/gamma probe
A plutonium-239 alpha source disk, with an activity on the order of 20,000 dpm
A strontium-90 beta source disk, with an activity on the order of 20,000 dpm
A cesium-137 gamma source disk, with an activity on the order of 2,000,000 dpm

The following may be substituted for the equivalent Ludlum equipment.
Eberline Model ESP-1 scaler/ratemeter
Eberline Model HP210L shielded pancake GM beta/gamma probe

5.2 Materials

Stainless steel or aluminum sampling bowl, 15-in. diameter (approximately 2 gal. capacity) OR 1-gal. zip-top plastic bag
Aluminum plate, 1/8-in. thick and at least 4-in. wide by 4-in. long
Plastic Marinelli beaker, 500-ml capacity, with tightly fitting cover

5.3 Equipment Setup

Example equipment setups are shown in Figure 1.

6.0 PROCEDURES

6.1 Determination of Required Measurements

Before collecting samples, determine which screening measurements are required by answering the following questions. Document decisions in a field log book or daily activity log as described in LANL-ER-SOP-1.04, Sample Control and Field Documentation. Verify decisions by consulting with the Sample Management Office.

1) Which radioactive contaminants are expected at the site? (This information may be available in the site work plan.) If this is known, continue with the questions below. If not, assume that all samples must be screened for alpha, beta, and gamma radiation and for tritium.
2) Is tritium expected at the site? If yes, samples must be sent to an onsite laboratory (mobile or fixed) for tritium analysis. If not, tritium screening may be omitted. Record this information on the beta radiation screening log (Attachment C).
3) Is there evidence (such as previous sampling results or documented process knowledge) that alpha-emitting radioactive contaminants are *not* expected at the site? (Alpha-emitting radionuclides found as soil contaminants at the Laboratory include americium-241, plutonium-238,

plutonium-239/240, uranium-234, uranium-235, and uranium-238. If you need help in determining what type of radiation a contaminant emits, consult the RCT assigned to the site.) If evidence indicates that alpha-emitting radionuclides are not expected, screening for alpha radiation may be omitted. Otherwise, samples must be screened for alpha radiation.

4) Is there evidence (such as previous sampling results or documented process knowledge) that beta-emitting radioactive contaminants (other than tritium) are *not* expected at the site? (Beta-emitting radionuclides found as soil contaminants at the Laboratory include strontium-90, yttrium-90, cesium-137, and daughters of uranium-238 [thorium-234 and protactinium-234m]. If you need help in determining what type of radiation a contaminant emits, consult the RCT assigned to the site.) If evidence indicates that beta-emitting radionuclides are not expected, screening for beta radiation may be omitted. Otherwise, samples must be screened for beta radiation.
5) Is there evidence (such as previous sampling results or documented process knowledge) that gamma-emitting radioactive contaminants are *not* expected at the site? (Gamma-emitting radionuclides found as soil contaminants at the Laboratory include uranium-235, americium-241, cobalt-60, and cesium-137. If you need help in determining what type of radiation a contaminant emits, consult the RCT assigned to the site.) If evidence indicates that gamma-emitting radionuclides are not expected, screening for gamma radiation may be omitted. Otherwise, samples must be screened for gamma radiation.

6.2 Instrument Operational Checks

Before collecting samples, perform operational checks on the instruments to be used. Confirm that the instrument calibrations are current. Ensure that instrument settings (threshold and window) are appropriate for the expected contaminants. Record instrument settings and information on the appropriate screening log (Attachments B, C, and D).

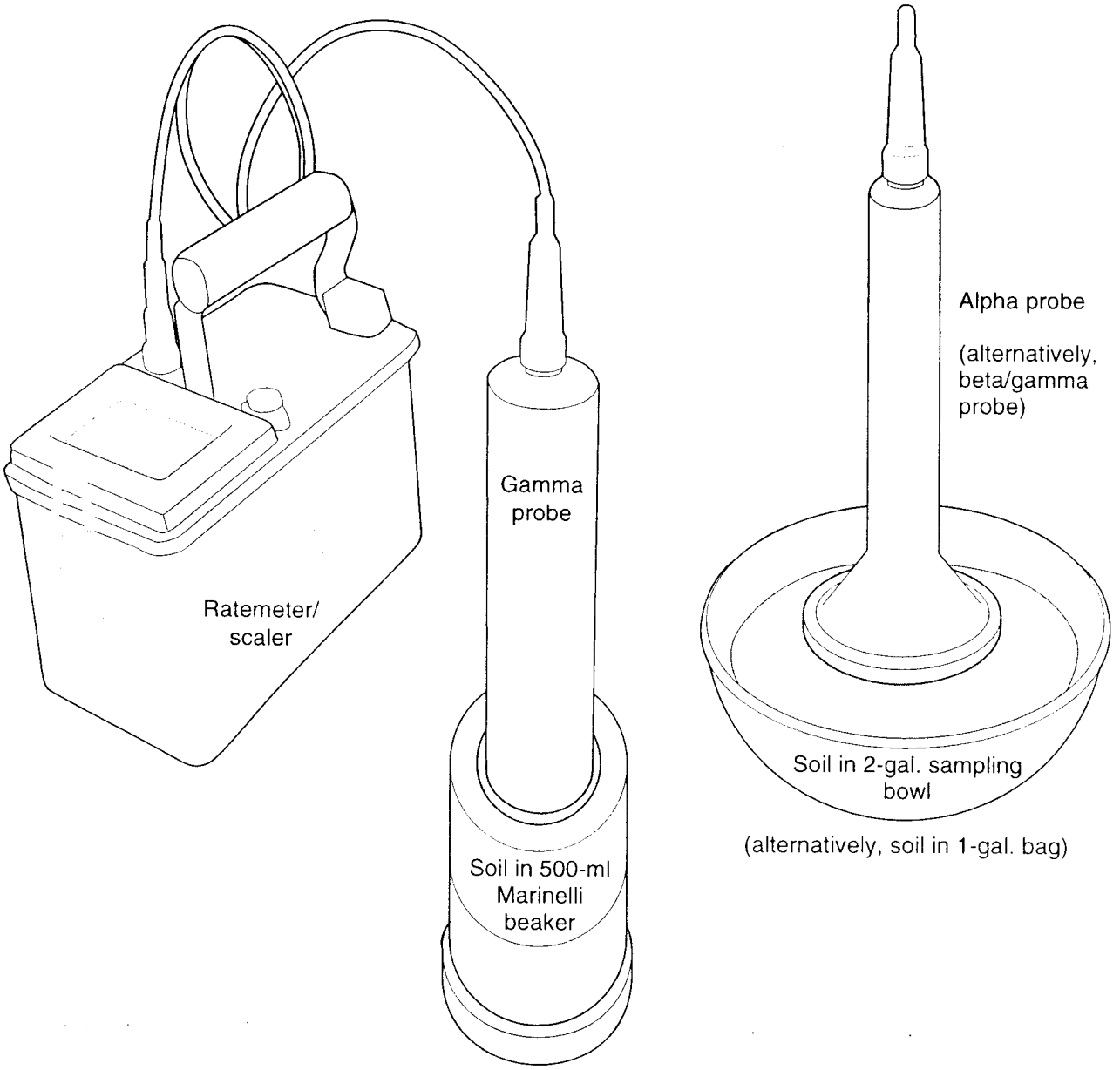

Figure A-1. Equipment setup

6.3 Instrument Background Measurements

Each day for each probe used that day, perform the following steps in an office or other low-background radiation setting. Record results on the screening log (Attachments B, C, and D).

1) Place the probe, face down, on a clean surface.
2) Perform and record on the screening log a 5-min count.
3) Calculate and record on the screening log the instrument background (B_i) for that probe in counts per minute (cpm) as follows:

$$\frac{\text{(Total background count)}}{5} = B_i \text{ cpm}$$

where total background count is in counts per 5 min.

6.4 Instrument Efficiency Measurements

Each day for each probe used that day, perform the following steps in an office or other low-background radiation setting. Record results on the screening log (Attachments B, C, and D).

1) Record on the screening log the radionuclide, serial number, activity (in dpm), and date activity was determined for a check source appropriate for each probe. Use the plutonium-239 source for the alpha probe, the strontium-90 source for the beta/gamma probe, and the cesium-137 source for the gamma probe.
2) Gently place the probe, face down, over the check source, taking care not to scratch the surface of the check source.
3) Perform and record on the screening log a 1-min count.
4) Calculate and record on the screening log the instrument efficiency (E) in cpm/dpm as follows:

$$\frac{\text{(Source count} - B_i)}{\text{Source activity}} = E \text{ cpm/dpm}$$

where source count is in cpm,

B_i is the instrument background for the appropriate probe in cpm, and

source activity is in dpm.

6.5 Minimum Detectable Concentration (MDC) Measurements

Before collecting samples, fill a Marinelli beaker with uncontaminated soil from an area near the site that represents background conditions. Consult the geologist assigned to the site if you need assistance in determining where to collect background soil.

Prepare the background soil in the beaker, as described in Section 6.6, Part A. Keep this background soil and use it to determine the minimum detectable concentration (MDC) for each probe each day while sampling at the site. When sampling is finished, dispose of the background soil as directed in LANL-ER-SOP-1.06, Environmental Restoration Soil Sample Field Screening for Radiation.

A. Minimum Detectable Alpha Concentration

Each day that the alpha probe is used, take the following steps to determine the minimum alpha concentration that the probe can detect.

1) Place the alpha probe, face down, over the soil in the Marinelli beaker.

2) Perform a 5-min count. Divide the total count by 5 and record on the minimum detectable concentration (MDC) worksheet (Attachment E) the resulting count (B_s) in cpm.

3) Record on the worksheet the instrument efficiency (E) determined in Part 6.4.

4) Calculate and record on the worksheet the minimum detectable concentration for alpha (MDC_a) in pCi/g as follows

$$\frac{4.65\sqrt{(B_s/t)}}{E \times 0.7} + 2.71/t = MDC_a$$

where B_s is the soil background for the alpha probe in cpm,
t is the time the background was counted in minutes, and
E is the instrument efficiency for the alpha probe in cpm/dpm.

5) If the minimum detectable alpha concentration (MDC_a) is greater than 100 pCi/g, increase the sample count time until the minimum detectable alpha concentration (MDC_a) is less than 100 pCi/g. Record changes to the sample count time on the worksheet.

6) Record on the alpha radiation screening log (Attachment B) the minimum detectable alpha concentration (MDC_a) in pCi/g.

B. Minimum Detectable Beta Concentration

Each day that the beta/gamma probe is used, take the following steps to determine the minimum beta concentration that the probe can detect.

1) Place the shielded beta/gamma probe, face down, over the soil in the Marinelli beaker.

2) Perform a 5-min count. Divide the total count by 5 and record on the minimum detectable concentration (MDC) worksheet (Attachment E) the resulting count in cpm.

3) Place a 1/8-in. thick aluminum plate over the soil. (This plate will attenuate the beta radiation expected in Laboratory soils.)

4) Place the shielded beta/gamma probe, face down, on the aluminum plate.

5) Perform a 5-min count. Divide the total count by 5 and record on the worksheet the resulting count in cpm.

6) Calculate and record on the worksheet the background beta radioactivity (B_s) in cpm as follows:

   (Count without aluminum plate - count with aluminum plate) = B_s
   where counts (with and without the aluminum plate) are in cpm.

7) Record on the worksheet the instrument efficiency (E) determined in Part 6.4.

8) Calculate and record on the worksheet the minimum detectable concentration for beta (MDC_b) in pCi/g as folliows:

$$\frac{4.65\sqrt{(B_s/t)}}{E \times 4.4} \frac{+2.71/t}{} = MDC_b$$

where B_s is the soil background for the beta/gamma probe in cpm,
t is the time the background soil was counted in minutes, and
E is the instrument efficiency for the beta/gamma probe in cpm/dpm.

9) If the minimum detectable beta concentration (MDC_b) is greater than 100 pCi/g, increase the sample count time until the minimum detectable beta concentration (MDC_b) is less than 100 pCi/g. Record changes to the sample count time on the worksheet.

10) Record on the beta radiation screening log (Attachment C) the minimum detectable beta concentration (MDC_b) in pCi/g.

C. Minimum Detectable Gamma Concentration

Each day that the gamma probe is used, take the following steps to determine the minimum gamma concentration that the probe can detect.

1) Place the gamma probe in the well of the Marinelli beaker.

2) Perform a 5-min count. Divide the total count by 5 and record on the minimum detectable concentration (MDC) worksheet (Attachment E) the resulting count (B_s) in cpm.

3) Record on the worksheet the instrument efficiency (E) determined in Part 6.4.

4) Calculate and record on the worksheet the minimum detectable concentration for gamma (MDC_g) in pCi/g as follows

$$\frac{4.65}{E \times 1320} \frac{\sqrt{(B_s/t)}}{} \frac{+2.71/t}{} = MDC_g$$

where B_s is the soil background for the gamma probe in cpm,
t is the time the background was counted in minutes, and
E is the instrument efficiency for the gamma probe in cpm/dpm.

5) If the minimum detectable gamma concentration (MDC_g) is greater than 100 pCi/g, increase the sample count time until the minimum detectable gamma concentration (MDC_g) is less than 100 pCi/g. Record changes to the sample count time on the worksheet.

6) Record on the gamma radiation screening log (Attachment D) the minimum detectable gamma concentration (MDC_g) in pCi/g.

6.6 Soil Sample Measurements

NOTE: Decontaminate equipment as necessary between soil samples using a soft brush or tissue to gently remove any soil from surfaces that were in contact with the sample.

A. Prepare the Soil Sample

NOTE: Remove aliquots for volatile organic compounds and tritium analyses (if necessary) before making soil sample measurements.

1) Fill a large (15-in. diameter) stainless steel or aluminum bowl about 1/4 to 1/2 full of soil sample (about 0.5 gal.). Alternatively, a 1-gal. zip-top plastic bag or other container can be used, but it must contain soil at least 2 in. deep and 6 in. across.
2) Remove stones, sticks, and other organic debris. Discard this material as directed in LANL-ER-SOP-1.06, Environmental Restoration Soil Sample Field Screening for Radiation.
3) Mix the soil well to ensure a homogenous sample, as directed in LANL-ER-SOP 6.10, Hand Auger and Thin Wall Tube Sampler. If the soil cannot be mixed well or is made up of widely varying soil textures, consult the geologist assigned to the site to determine whether to continue.
4) If the sample is to be screened for alpha or beta radiation, ensure that the sample is visibly dry. If the sample is damp, air dry it. If the sample still appears damp after 24 hours of air-drying, it may be faster to screen the sample at an onsite laboratory (mobile or fixed) than to wait until it appears dry.
5) With a gloved hand, lightly flatten the dry soil in the bowl or bag to make a flat, smooth surface that is at least 6 in. across and has nothing sticking up that could puncture a probe face.

B. Measure Alpha Radiation in Soil Sample

1) Gently place the alpha probe, face down, on the smooth dry soil in the bowl or bag.
2) Perform a 5-min count. Divide the total count by 5 and record on the screening log (Attachment B) the resulting sample count in cpm.
3) Calculate and record on the screening log the sample alpha radioactivity in dpm as follows:

$$\frac{(\text{Sample count} - B_i)}{E} = \text{sample alpha radioactivity (dpm)}$$

where sample count is in cpm,
B_i is the instrument background for the alpha probe in cpm, and
E is the instrument efficiency for the alpha probe in cpm/dpm.

4) Multiply the sample alpha radioactivity (dpm) by 4.5. (This value was determined using the procedure described in Attachment A.) Round the product to the nearest ten and record it on the screening log as the maximum value.
5) Compare the maximum value from Step 4 to the following table and record on the screening log the results indicated.

If the maximum value from Step 4 is	Then record on the screening log the alpha radiation screening result as
100 or less	< 100 pCi/g

between 100 and 1000	$\frac{\text{(maximum value)}^a}{2}$ to (maximum value) pCi/g
1000 or greater	requires further evaluation

[a] If (maximum value)/2 <100, record the value as 100. If (maximum value)/2 >100, record the actual value.

6) If the maximum value from Step 4 is 1000 pCi/g or greater, a more accurate measurement should be made at an onsite laboratory (mobile or fixed) to further evaluate the sample for shipping. Contact BUS-4, 667-4127, for assistance in transporting this sample to an onsite laboratory.

7) Decontaminate the probe as necessary using a soft brush or tissue to gently remove any soil from surfaces that were in contact with the sample.

C. Measure Beta Radiation in Soil Sample

NOTE: This method will not detect the low-energy beta radiation emitted by tritium. If tritium is a suspected contaminant at this site, a sample must be sent to an onsite laboratory (mobile or fixed) for analysis for tritium.

1) Gently place the shielded beta/gamma probe, face down, over the smooth dry soil in the bowl or bag.

2) Perform a 5-min count. Divide the total count by 5 and record on the screening log (Attachment C) the resulting sample count in cpm.

3) Place a 1/8-in.-thick aluminum plate over the soil. (This plate will attenuate the beta radiation from contaminants expected in Laboratory soils.)

4) Place the shielded beta/gamma probe, face down, on the aluminum plate.

5) Perform a 5-min count. Divide the total count by 5 and record on the screening log the resulting sample count in cpm.

6) Calculate and record on the screening log the sample beta radioactivity in dpm as follows:

$$\frac{\text{(Count without aluminum plate - count with aluminum plate)}}{E} = \text{sample beta radioactivity (dpm)}$$

where counts (with and without the aluminum plate) are in cpm, and

E is the instrument efficiency for the beta/gamma probe in cpm/dpm.

7) Multiply the sample beta radioactivity (dpm) by 0.9. (This value was determined using the procedure described in Attachment A.) Round the product to the nearest ten and record it on the screening log as the maximum value.

8) Compare the maximum value from Step 7 to the following table and record on the screening log the results indicated.

If the maximum value from Step 7 is	Then record on the screening log the beta radiation screening result as
100 or less	< 100 pCi/g
between 100 and 1000	$\frac{\text{(maximum value)}^{a}}{2}$ to (maximum value) pCi/g
1000 or greater	requires further evaluation

[a] If (maximum value)/2 <100, record the value as 100. If (maximum value)/2 >100, record the actual value.

9) If the maximum value from Step 7 is 1000 pCi/g or greater, a more accurate measurement should be made at an onsite laboratory (mobile or fixed) to further evaluate the sample for shipping. Contact BUS-4, 667-4127, for assistance in transporting this sample to an onsite laboratory.

10) Decontaminate the probe and the aluminum plate as necessary using a soft brush or tissue to gently remove any soil from surfaces that were in contact with the sample.

D. Measure Gamma Radiation in Soil Sample

1) Gently place the probe on the surface on which you are working.

2) Perform and record on the screening log (Attachment D) a 5-min count (see LANL-ER-SOP-06.23, Measurement of Gamma-Ray Fields Using a Sodium Iodide Detector).

3) Divide the total count by 5 and record on the screening log the local background count ($B_{i,local}$) in cpm.

4) Fill a 500-ml plastic Marinelli beaker with soil sample from the bowl or bag. Cover the beaker tightly.

5) Place the gamma probe in the well of the Marinelli beaker.

6) Perform a 5-min count. Divide the total count by 5 and record on the screening log the resulting sample count in cpm.

7) Calculate and record on the screening log the sample gamma radioactivity in dpm as follows:

$$\frac{(\text{Sample count} - B_{i,local})}{E} = \text{sample gamma radioactivity (dpm)}$$

where sample count is in cpm,

$B_{i,local}$ is the local background count for the gamma probe in cpm, and

E is the instrument efficiency for the gamma probe in cpm/dpm.

8) Multiply the sample gamma radioactivity (dpm) by 0.007. (This value was determined using the procedure described in Attachment A.) Round the product to the nearest ten and record it on the screening log as the maximum value.

9) Compare the maximum value from Step 8 to the following table and record on the screening log the results indicated.

If the maximum value from Step 8 is	Then record on the screening log the gamma radiation screening result as
100 or less	< 100 pCi/g
between 100 and 1000	$\frac{\text{(maximum value)}^{a}}{2}$ to (maximum value) pCi/g
1000 or greater	requires further evaluation

[a] If (maximum value)/2 < 100, record the value as 100. If (maximum value)/2 > 100, record the actual value.

10) If the maximum value from Step 8 is 1000 pCi/g or greater, a more accurate measurement should be made at an onsite laboratory (mobile or fixed) to further evaluate the sample for shipping. Contact BUS-4, 667-4127, for assistance in transporting this sample to an onsite laboratory.

6.7 Quality Assurance

A. Instrument Efficiency

1) Each day, check each probe used with a standard check source and calculate probe efficiency (as described in Section 6.4).

2) If efficiency varies more than 20% from previous day's efficiency, stop using the instrument and inform the equipment manager that there is a problem with the instrument. Obtain another instrument and repeat this procedure.

3) Document daily efficiency checks and instrument problems in a field log book or daily activity log as described in LANL-ER-SOP-1.04, Sample Control and Field Documentation.

B. Sample Check

1) Send 10% of the first 50 samples screened (along with completed screening logs and minimum detectable concentration worksheets) to an onsite laboratory for concurrent screening.

2) Compare results and discuss them with the RCT assigned to the site to determine how many of the remaining samples to send to the onsite laboratory for concurrent screening.

3) Document decisions in a field log book or daily activity log as described in LANL-ER-SOP-1.04, Sample Control and Field Documentation.

7.0 REFERENCES

Department of Energy, "Occupational Radiation Protection," 10 CFR 835, December 14, 1993

Department of Transportation, "Hazardous Materials Regulations," 49 CFR 172 and 173, October 1, 1994

ESH-1-01-03, Radiological Surveillance Authorization Agreement

International Air Transport Authority, *Dangerous Goods Regulations*, 35th ed., January 1, 1994

LANL-ER-AP-2.1, Procedure for LANL ER Records Management

LANL-ER-AP-5.2, Determination, Completion, and Documentation of Environmental Restoration Worker Training

LANL-ER-SOP-1.03, Handling, Packaging, and Shipping of Samples

LANL-ER-SOP-1.04, Sample Control and Field Documentation

LANL-ER-SOP-1.06, Environmental Restoration Soil Sample Field Screening for Radiation

LANL-ER-SOP 6.10, Hand Auger and Thin Wall Tube Sampler.

LANL-ER-SOP-6.23, Measurement of Gamma-Ray Fields using a Sodium Iodide Detector

LANL ER Project Health and Safety Plan, Rev. 0, March 24, 1995

8.0 RECORDS

The following records will be generated when following this procedure:

- Alpha Radiation Screening Log,
- Beta Radiation Screening Log,
- Gamma Radiation Screening Log, and
- Minimum Detectable Concentration (MDC) Worksheet.

The following records will be generated when following other procedures as directed in this procedure.

ER Record Index Form (see LANL-ER-AP-2.1)
ER Record Index Form Attachment Sheet (see LANL-ER-AP-2.1)
Training Documentation Form (see LANL-ER-AP-5.2)
Field Log Book (see LANL-ER-SOP-1.04, and -6.10)
Daily Activity Log (see LANL-ER-SOP-1.04, -6.10, and -6.23)

Sample Collection Logs (see LANL-ER-SOP-1.04)
Chain-of-Custody/Request for Analysis Form (see LANL-ER-SOP-1.04)
Waste Profile Request (see LANL-ER-SOP-1.06)
Radioactive Solid Waste Disposal Record, Application for Storage/Disposal (see LANL-ER-SOP-1.06)
Disposal of Batch Liquid Waste (see LANL-ER-SOP-1.06)
Hazardous Materials Transfer Form (see LANL-ER-SOP-1.06)
Chemical Waste Disposal Request (see LANL-ER-SOP-1.06)
Memo Describing the Correlation and a Spreadsheet of Correlation Data

Records will be transferred to the ER Records Processing Facility by the field team leader or designee in accordance with the administrative procedure for ER records management, LANL-ER-AP-2.1.

9.0 ATTACHMENTS

Attachment A - Correlating Instrument Reading to Radionuclide Content
Attachment B - Alpha Radiation Screening Log
Attachment C - Beta Radiation Screening Log
Attachment D - Gamma Radiation Screening Log
Attachment E - Minimum Detectable Concentration Worksheet

Correlating Instrument Measurements to Radionuclide Concentration

BACKGROUND

This procedure must be performed in a low-background radiation setting. Refer to Section 4.0, LANL-ER-SOP-10.11, for further background and caution information.

EQUIPMENT AND MATERIALS REQUIRED

Equipment

Scaler/ratemeter that will perform timed counts
Alpha, beta, or gamma radiation probe that is sensitive to radionuclide concentrations of 100 pCi/g or less
Check source disk, with an activity on the order of 20,000 dpm, appropriate for the probe

Materials

At least 500 g of dry, homogenous soil with gross radiation content of approximately 100 pCi/g, known to within 10%
At least 500 g of dry, homogenous soil with gross radiation content of approximately 500 pCi/g, known to within 10%
At least 500 g of dry, homogenous soil with gross radiation content of approximately 1000 pCi/g, known to within 10%
Stainless steel or aluminum sampling bowl, 15-in. diameter (approximately 2 gal. capacity) OR 1-gal. zip-top plastic bag OR other appropriate container (such as a Marinelli beaker for use with a NaI probe)

Setup of Equipment per Section 5.0

Refer to Section 5.0, LANL-ER-SOP-10.11.

Instrument Operational Checks

Perform operational checks on the instrument. Confirm that the instrument calibration is current. Record the following information on a spreadsheet. The spreadsheet is part of the record produced by this procedure (see Section 8.0, LANL-ER-SOP-10.11). An example spreadsheet is attached (Figure A-1).

Date
Technician's name
Probe model and serial number
Ratemeter model and serial number
Date next calibration is due
Battery level (if appropriate)
Voltage setting (if appropriate)
Threshold setting (if appropriate)
Window setting (if appropriate)

Instrument Background Measurements

1) Place the probe, face down, on a clean surface.
2) Perform and record on a spreadsheet at least 10 counts for 1 min each (for an alpha probe, the count time may be increased to 10 min to provide better counting statistics).
3) Calculate and record on a spreadsheet the average instrument background ($\overline{B}$) in counts per minute (cpm) as follows:

   (Sum of all background counts/N) = $\overline{B}$ cpm

   where background counts are in cpm, and
   N is the number of measurements performed.

4) Calculate and record on a spreadsheet the standard deviation in the instrument background (SD_B) as follows:

$$\sqrt{\frac{\sum(B_i - \overline{B})^2}{(N-1)}} = \mathrm{SD}_B$$

where B_i is the individual background count in cpm,

$\overline{B}$ is the average instrument background in cpm, and
N is the number of measurements performed.

Instrument Efficiency Measurements

1) Record on a spreadsheet the radionuclide, serial number, activity (in dpm), and date the activity was determined for a check source appropriate for each probe (for example, a plutonium-239 source for the alpha probe, a strontium-90 source for the beta/gamma probe, or a cesium-137 source for the gamma probe).

2) Gently place the probe, face down, over the check source, taking care not to scratch the surface of the check source.
3) Perform and record on a spreadsheet at least 10 measurements for 1 min each.
4) Calculate and record on a spreadsheet instrument efficiency (E) in cpm/dpm as follows:

$$\frac{\text{(Sum of all source counts/number of measurements)} - \overline{B}}{\text{Source activity}} = \text{E cpm/dpm}$$

where source counts are in cpm,
$\overline{B}$ is the average instrument background in cpm, and
source activity is in dpm.

Count Time Calculation

1) As described under "Instrument Background Measurements," perform and record on a spreadsheet a 1-min instrument background measurement (b).
2) As described under "Soil Measurements," perform and record on a spreadsheet a 1-min count on the soil with the least activity (s).
3) Calculate and record on a spread sheet the optimum sample count time (t_s) using the following calculation:

$$\sqrt{\frac{s}{b}} = t_s \text{ min}$$

where s is the 1-min gross soil measurement in cpm, and
b is the 1-min instrument background measurement in cpm.

4) Use a count time equal to or greater than the calculated count time (t_s) for the soil measurements described under "Soil Measurements." Record the actual count time used on a spreadsheet.

Soil Measurements

NOTE: Decontaminate equipment as necessary between measurements using a soft brush or tissue to gently remove any soil from surfaces that were in contact with the sample.

A. Prepare the Soil

1) Fill a large (15-in. diameter) stainless steel or aluminum bowl about 1/4 full of soil (500–3000 g). Alternatively, a 1-gal. zip-top plastic bag or other

container can be used, but if alpha or beta radiation are being measured, it must contain soil at least 2 in. deep and at least as wide as the probe.

2) Mix the soil well to ensure a homogenous sample.
3) With a gloved hand, lightly flatten the dry soil in the bowl or bag to make a flat, smooth surface at least the width of the probe and having nothing sticking up that could puncture a probe face.

B. Measure Gross Radiation in Soil

1) Place the probe, face down, on the smooth dry soil in the bowl or bag.
2) Perform and record on a spreadsheet a count, using the count time determined under "Count Time Calculation". Divide the total count by the count time and record on a spreadsheet the resulting soil count in cpm.
3) Mix the soil and repeat steps 1 and 2 at least 10 times.
4) Calculate and record on a spreadsheet the soil gross radioactivity in dpm as follows:

$$\frac{(\text{Sum of all soil counts}/N) - \overline{B}}{E} = \text{soil radioactivity (dpm)}$$

where soil counts are in cpm,
N is the number of measurements performed,
$\overline{B}$ is the average instrument background for the probe in cpm, and
E is the instrument efficiency in cpm/dpm.

5) Calculate and record on a spreadsheet the standard deviation in the soil radioactivity (SD_S) in cpm as follows:

$$\sqrt{\frac{\sum (X_i - \overline{B})^2}{(N-1)}} = \mathrm{SD}_s$$

where X_i is the individual soil count (cpm),
$\overline{B}$ is the average instrument background (cpm), and
N is the number of measurements performed.

6) If the standard deviation (SD_S) is greater than 50%, determine the source of the problem and correct it.
7) Decontaminate the probe as appropriate.
8) Check the instrument background as described under "Instrument Background Measurements." If it is greater than three times the background standard deviation (SD_B) plus the average instrument background ($\overline{B}$), determine the source of the problem and correct it.
9) Repeat Steps 1-8 with the other two soil samples.

C. Correlate Instrument Results to Known Concentration

1) Prepare a graph, plotting the soil instrument value (dpm) on the x-axis and the known gross radiation concentration (pCi/g) on the y-axis for the three soils.
2) Determine the equation of the linear regression line and the proportion of variability defined by the regression (R^2) produced by the plotted data. If the R^2 (rounded) is less than 0.9, determine the source of the problem and correct it. If necessary, repeat the data collection activities under "Soil Measurements," Part B.
3) Adjust the slope of the line in this equation to add a safety factor by multiplying the slope of the line by two. For example, if the equation of the line is $y = 2.631x$, then the adjusted slope is 5.262 and the adjusted equation (which incorporates a safety factor of 2) is $y = 5.262x$ or $5.3x$ (rounded).
4) Use the adjusted slope in SOP 10.11, Section 6.6, steps B4, C7, and D8.
5) Prepare a memo describing the results of the correlation and submit it with the correlation data to the Records Processing Facility in accordance with the Administrative Procedure for ER Records Management, LANL-ER-AP-2.1.

Soil Correlation: Alpha

Date: Technician:

Ratemeter		**Probe**	
Model:		Model:	
Serial #:		Serial #:	
Cal Due:			
Battery:		**Check source**	
Voltage:		Radionuclide:	
Threshold:		Serial #:	
Window:		Activity:	
		Date:	

Instrument Background		**Instrument Efficiency**		**Count Time**	
Count #	**Counts/ min**	**Count #**	**Counts/ min**	Instrument background count, b (cpm):	
1		1		Soil count, s (cpm):	
2		2		Calculated count time, t_s (min):	
3		3		Actual count time (min):	
4		4			
5		5			
6		6			
7		7			
8		8			
9		9			
10		10			
Avg bkd, B (cpm)		**Average (cpm)**			
Std dev (1 sigma), SD_s		**Avg efficiency, E (cpm/dpm)**			

Soil Gross Radiation			**Soil Gross Radiation**			**Soil Gross Radiation**		
Soil ID:			Soil ID:			Soil ID:		
Count #	**Counts/ min**	**Counts/ min**	**Count #**	**Counts/ min**	**Counts/ min**	**Count #**	**Counts/ min**	**Counts/ min**
1			1			1		
2			2			2		
3			3			3		
4			4			4		
5			5			5		
6			6			6		
7			7			7		
8			8			8		
9			9			9		
10			10			10		
Average count (cpm)			**Average count (cpm)**			**Average count (cpm)**		
Std dev (1 sigma), SD_s			**Std dev (1 sigma), SD_s**			**Std dev (1 sigma), SD_s**		
Average activity (dpm)			**Average activity (dpm)**			**Average activity (dpm)**		

Alpha Radiation Screening Log

Page ____ of ____

"A _____ PRS _____ Analyst _____ Date _____

Ratemeter/Scaler
Model: _____
S/N: _____
Calibration due date: _____
Threshold: _____
Window: _____
High voltage: _____
Battery: _____

Probe
Model: _____
S/N: _____

Source
Radionuclide: _____
S/N: _____
Activity (dpm): _____
on _____ (Date)

Instrument Efficiency
Source counts per 1 min: _____ cpm
Efficiency (E) = $\frac{\text{source counts (cpm)} - B_i \text{ (cpm)}}{\text{source activity (dpm)}}$ _____ cpm/dpm

Instrument Background
Counts per 5 min: _____
Counts per 1 min (B_i): _____ cpm

Minimum Detectable Alpha Concentration (MDC$_a$)
MDC$_a$ = _____ pCi/g

SOIL SAMPLE SCREENING

Sample ID	Counts per 1 min (cpm)	radioactivity (dpm) = (cpm - B_i)/E	Maximum value = dpm x 4.5 (to nearest 10)	Alpha radiation screening results (see table below)

Reviewed by: **Title:** **Date:**

If the maximum value in column 4 is	Then the alpha radiation screening result is
100 or less	< 100 pCi/g
between 100 and 1000	$\frac{\text{(maximum value)}}{2}$[a] to (maximum value) pCi/g
1000 or greater	requires further evaluation

[a] If (maximum value)/2 < 100, record value as 100. If (maximum vlaue)/2 > 100, record actual value.

Beta Radiation Screening Log

Page ____ of ____

TA _____ PRS _____ Analyst _____ Date _____

Ratemeter/Scaler
Model: _____
S/N: _____
Calibration due date: _____
Threshold: _____
Window: _____
High voltage: _____
Battery: _____

Probe
Model: _____
S/N: _____

Source
Radionuclide: _____
S/N: _____
Activity (dpm): _____
on _____ (Date)

Is tritium expected at the site? Yes ___ No ___
(If yes, samples must be sent to an onsite laboratory for tritium screening.)

Instrument Background
Counts per 5 min: _____
Counts per 1 min (B_i): _____ cpm

Instrument Efficiency
Source counts per 1 min: _____ cpm
Efficiency (E) = $\frac{\text{source counts (cpm)} - B_i\text{ (cpm)}}{\text{source activity (dpm)}}$ = _____ cpm/dpm

Minimum Detectable Beta Concentration (MDC_b)
MDC_b = _____ pCi/g

SOIL SAMPLE SCREENING

Sample ID	Counts per min w/o Al plate (cpm)	Counts per min w/Al plate (cpm)	Sample beta radioactivity (dpm) = (cpm w/o Al - cpm w/Al)/E	Maximum value = dpm x 0.9 (to nearest 10)	Beta radiation screening results (see table below)

Reviewed by: _____ Title: _____ Date: _____

If the maximum value in column 5 is	Then the beta radiation screening result is
100 or less	< 100 pCi/g
between 100 and 1000	(maximum value)/2 to (maximum value) pCi/g[a]
1000 or greater	requires further evaluation

[a] If (maximum value)/2 ≤ 100, record value as 100. If (maximum value)/2 > 100, record actual value.

Gamma Radiation Screening Log

Page ____ of ____

TA _____ PRS _____ Analyst _____ Date _____

Ratemeter/Scaler
Model: _____
S/N: _____
Calibration due date: _____
Threshold: _____
Window: _____
High Voltage: _____
Battery: _____

Probe
Model: _____
S/N: _____

Source
Radionuclide: _____
S/N: _____
Activity (dpm): _____ on _____ (Date)

Instrument Efficiency
Source counts per 1 min: _____ cpm

$$\text{Efficiency (E)} = \frac{\text{source counts (cpm)} - B_i\text{ (cpm)}}{\text{source activity (dpm)}} = \_\_\_\_\_ \text{ cpm/dpm}$$

Instrument Background
Counts per 5 min: _____
Counts per 1 min (B_i): _____ cpm

Local Background
Counts per 5 min: _____
Counts per 1 min ($B_{i,local}$): _____ cpm

Minimum Detectable Gamma Concentration (MDC_g)
MDC_g = _____ pCi/g

SOIL SAMPLE SCREENING

Sample ID	Counts per min (cpm)	Sample gamma radioactivity (dpm) = (cpm - $B_{i,local}$)/E	Maximum value = dpm x 0.007 (to nearest 10)	Gamma radiation screening results (see table below)

Reviewed by: _____ Title: _____ Date: _____

If the maximum value in column 4 is	Then the gamma radiation screening result is
100 or less	< 100 pCi/g
between 100 and 1000	(maximum value)/2 to (maximum value) pCi/g[a]
1000 or greater	requires further evaluation

[a] If (maximum value)/2 ≤ 100, record value as 100. If (maximum value)/2 > 100, record actual value.

Minimum Detectable Concentration (MDC) Worksheet

Page ____ of ____

IA _____ PRS _____ Analyst _____ Date _____

Minimum Detectable Alpha Concentration

Count time (t): _____ (min)

Counts per 1 min (B_s): _____ cpm

Instrument efficiency (E): _____ cpm/dpm

Minimum detectable concentration = $\frac{4.65\sqrt{(B_s/t)} + 2.71/t}{E \times 1.27}$ = _____ pCi/g

NOTE: If MDC_a > 100 pCi/g, increase count time (t) and repeat measurement.

Minimum Detectable Beta Concentration

Count time (t): _____ (min)

Counts per 1 min without aluminum plate: _____ cpm

Counts per 1 min with aluminum plate: _____ cpm

Difference (B_s): _____ cpm

Instrument efficiency (E): _____ cpm/dpm

Minimum detectable concentration = $\frac{4.65\sqrt{(B_s/t)} + 2.71/t}{E \times 45}$ = _____pCi/g

(MDC_b)

NOTE: If MDC_b > 100 pCi/g, increase count time (t) and repeat measurement.

Minimum Detectable Gamma Concentration

Count time (t): _____ (min)

Counts per 1 min (B_s): _____ cpm

Instrument efficiency (E): _____ cpm/dpm

Minimum detectable concentration = $\frac{4.65\sqrt{(B_s/t)} + 2.71/t}{E \times 1332}$ = _____pCi/g

(MDC_g)

NOTE: If MDC_g > 100 pCi/g, increase count time (t) and repeat measurement.

Los Alamos National Laboratory **Environmental Restoration Program** Standard Operating Procedure	No: LANL-ER-SOP-11.01 Rev: 0

Measurement of Bulk Density, Dry Density, Water Content, and Porosity in Soil

UNCONTROLLED

	(Print Name)	(Signature)	(Date)
Preparer:	Sandra Wagner	Sandra Wagner	11-26-91
Quality Review by:	Terry Morgan	Terry Morgan	12/13/91
Technical Review by:	Clarence J. Duffy	Clarence J. Duffy	12/19/91
QRPI Approval:	Karen L. Foster	Karen L Foster	12/20/91
PM Approval:	Robert W Vocke	Robert W Vocke	3-4-92

Effective Date: 3.16-92

MEASUREMENT OF BULK DENSITY, DRY DENSITY, WATER CONTENT, AND POROSITY IN SOIL

1.0 PURPOSE

This procedure describes two methods for determining four different soil characteristics, bulk density, dry density, water content, and porosity.

2.0 SCOPE

2.1 Applicability

This procedure is applicable for determining density and moisture content in the soil for the Environmental Restoration program. The bulk density may be used in the calibration of in situ stresses for engineering analysis.

2.2 Training

Personnel using this procedure must document that they have both read and understand this procedure and the procedures in Section 1.0, General Instructions.

3.0 DEFINITIONS

Refer to the attached ASTM procedure.

4.0 BACKGROUND AND/OR CAUTIONS

4.1 Bulk Density, Dry Density, and Water Content

Refer to the following attached ASTM and to the Site Health and Safety plan for associated hazards and/or cautions.

4.2 Porosity

Any mass of soil will contain a collection of solid particles with voids in between. In general, these voids are comprised of air and water and the soil is made up of small grains of different minerals. Thus, the total volume of soil (V_t) consists of the volume of solids (V_s) and the volume of voids (V_v). The volume of voids is usually made up of the volume of water (V_w) and the volume of air (V_a). A phase diagram like the one below is useful in the calculation of porosity, density, void ratio, and other soil parameters.[1]

UNCONTROLLED

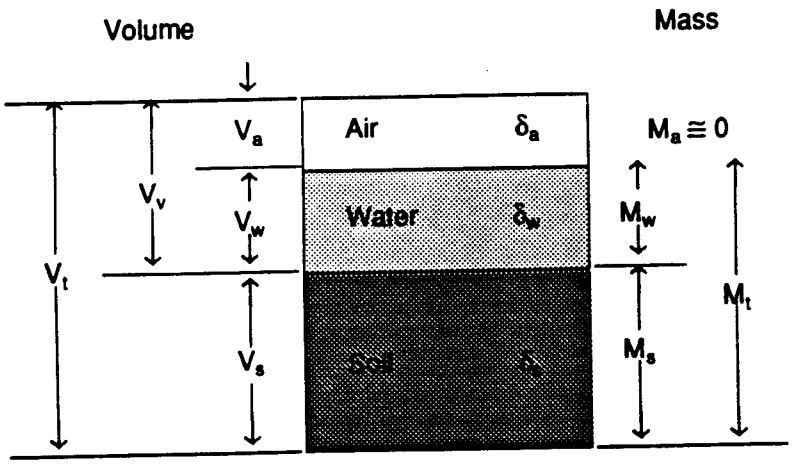

UNCONTROLLED

5.0 EQUIPMENT

Refer to the attached ASTM procedure.

6.0 PROCEDURE

6.1 Bulk Density, Dry Density, and Water Content.

Refer to the following attached ASTM.

6.2 Porosity

To find the porosity of soil, perform Method B, Paraffin Wax Method, in the attached ASTM. Calculate the following from the experiment:

M_s = mass of dry peat or soil ≈ mass of solids
M' = mass of moist peat or soil
δ_s = dry density ≈ density of solids
V = total volume of sample

Use the above values to calculate the following values:

$V_s = M_s/\delta_s$, where V_s = volume of solids.

and

$V - V_s = V_v$, where $V_v = V_{air} + V_{water}$ = volume of the voids.

$M' - M_s = M_w$, where M_w = mass of water

$V_w = M_w/\delta_w$, where V_w = volume of water and δ_w = density of water ≅ 1.0 g/c^3

then

$V - V_w - V_s = V_a$, where V_a = volume of air

and

the void ratio = $e = (V_a + V_w)/V_s$

and

porosity = n (in percent) = $100(V_a + V_w)/V$

7.0 REFERENCES

The following procedures are directly associated with this procedure and should be reviewed before field operations:

LANL-ER-SOPs in Section 1.0, General Instructions.

ASTM STANDARD D 4531-86. 1986. Standard Test Method for Bulk Density of Peat and Peat Products.

[1]Holtz, Robert D. and William D. Kovacs, "An Introduction to Geotechnical Engineering." 1981. Englewood Cliffs, NJ.

8.0 RECORDS

A Chain-of-Custody/Request for Analysis form (SOP-01.04) will be maintained and will document the following information:

- Field Sample Number/Identification
- Date and time collected
- Matrix (soil, sludge, core, sediment)
- Analysis requested

The laboratory will report recorded weights of samples, oven time and temperatures, all calculations, and any deviations.

9.0 ATTACHMENTS

A. ASTM STANDARD D 4531-86. 1986. Standard Test Method for Bulk Density of Peat and Peat Products.

UNCONTROLLED

ASTM STANDARD D 4531-86, STANDARD TEST METHOD FOR BULK DENSITY OF PEAT AND PEAT PRODUCTS

Designation: D 4531 - 86

Standard Test Methods for Bulk Density of Peat and Peat Products[1]

This standard is issued under the fixed designation D 4531; the number immediately following the designation indicates the year of original adoption or, in the case of revision, the year of last revision. A number in parentheses indicates the year of last reapproval. A superscript epsilon (ε) indicates an editorial change since the last revision or reapproval.

UNCONTROLLED

1. Scope

1.1 These test methods cover the determination of the bulk density of both peat in its natural state and peat products (Note 1). These test methods consist of defining a volume of peat and determining the mass of that specific volume. The difference in the respective methods is in the procedures employed to determine the peat volume.

NOTE 1—Test Method D 2978 is used for specifying the volume represented by a quantity of loose processed peat or the volume of a peat bale.

1.2 *Method A*—This method, the core method, covers the determination of the bulk density of an undisturbed core of peat taken with a piston sampler or other suitable core sampler (Sections 6 and 7).

1.3 *Method B*—This method, the paraffin wax method, covers the determination of the bulk density of undisturbed clods or irregular pieces of wet peat and compressed peat products (Sections 8 and 9).

1.4 *This standard may involve hazardous materials, operations, and equipment. This standard does not purport to address all of the safety problems associated with its use. It is the responsibility of whoever uses this standard to consult and establish appropriate safety and health practices and determine the applicability of regulatory limitations prior to use.*

2. Referenced Documents

2.1 *ASTM Standards:*

D 2974 Test Methods for Moisture, Ash, and Organic Matter of Peat and Other Organic Soils[2]

D 2978 Test Method for Volume of Processed Peat Materials[2]

3. Definitions

3.1 *bulk density*, ρ—total mass (solids plus water) per unit of total volume of a peat at a given moisture condition.

3.2 *dry density*, ρ_d— mass of dry organic and mineral matter per unit of total volume of a peat at a given moisture condition.

NOTE 2—In many peat science applications and publications, the term defined here as "dry density" in accordance with common geotechnical engineering usage is referred to as "bulk density". Care is necessary to distinguish which definition is being used when such a term is encountered.

4. Significance and Use

4.1 These test methods provide uniform procedures for determining the bulk density of in situ peat and processed peat products. The bulk density is of use in the calculation of in situ stresses for engineering analysis and in quantifying the amount of material present when considering peat as a resource. In the latter case, it is necessary to consider the moisture condition for which the bulk density was determined; a more useful parameter to consider may well be the dry density, ρ_d.

5. Apparatus

5.1 *Drying Oven*—A thermostatically controlled drying oven maintained at a temperature of 105 ± 5°C.

5.2 *Balances*—Balances sensitive to 0.01 g for samples less than 100 g, sensitive to 0.1 g for samples between 100 g and 1000 g, or sensitive to 1 g for samples over 1000 g.

5.3 *Moisture Content Containers*—Suitable containers for laboratory moisture content determinations.

5.4 *Plastic Sample Bags or Sampling Jars.*

5.5 *Sampler*—Piston sampler or other suitable coring device which will give a reasonably undisturbed cylindrical sample.

NOTE 3—Samples taken with the Macaulay type peat sampler are semicylindrical in shape and relatively undisturbed. They may also be used in this method of determination.

5.6 *Sharp Knife*—An electric knife or barber's razor will be best for laboratory work.

5.7 *Paraffin Wax*, maintained at a temperature between 60 and 70°C, for use in Method B only.

5.8 *Graduated Cylinder*, for use in Method B only.

METHOD A—CORE METHOD

6. Procedure

6.1 Take a representative reasonably undisturbed core of peat with a piston sampler or other coring device.

6.2 With a sharp knife, cut specimens of no less than 50 mm in length from the various layers included in the core. Measure and record the specimen length to the nearest millimetre.

6.3 For samples extruded in the field, place the specimen into a plastic bag or sampling jar and seal to prevent moisture loss.

6.4 Transfer the whole specimen and any free water to a moisture content container in the laboratory and obtain and record the moist mass of peat, M, to the sensitivity of the balance used.

[1] These test methods are under the jurisdiction of ASTM Committee D-18 on Soil and Rock and are the direct responsibility of Subcommittee D18.18 on Peats and Related Materials.

Current edition approved Feb. 24, 1986. Published May 1986.

[2] *Annual Book of ASTM Standards*, Vol 04.08.

6.5 Dry the specimen in an oven at 105°C until a constant mass is reached. Record the mass of dry peat, M_s.

7. Calculation

7.1 The bulk density, ρ, is calculated as follows:

$$\rho = (M/AL)\ \text{g/cm}^3$$

where:
M = mass of the wet peat sample, g,
L = length of sample, cm, and
A = cross-sectional area of sample, as determined from the diameter and form of the sampling device, cm^2.

7.2 The moisture content, w_d, by dry mass of the specimen is calculated as follows for engineering purposes:

$$w_d = (M - M_s)/M_s$$

where:
M_s = mass of the oven dried peat specimen, g.

7.2.1 The moisture content, w_t, may also be expressed in terms of total mass, and is then calculated as follows:

$$w_t = (M - M_s)/M$$

7.2.2 It is of the utmost importance that the approach taken in calculating moisture contents be specified when reporting results or when the term is first used in a report.

7.3 The dry density, ρ_d, is calculated as follows:

$$\rho_d = (M_s/AL)\ \text{g/cm}^3$$

METHOD B—PARAFFIN WAX METHOD

8. Procedure

8.1 Take a representative reasonably undisturbed sample of the peat and trim it into as smooth a shape as possible. Weigh and record the moist mass of the peat sample, M.

8.2 Dip the sample momentarily into melted paraffin maintained at a temperature between 60 and 70°C. Allow the excess paraffin to drain and the coating to dry. Repeat the dipping and drying until a continuous coating is formed.

8.3 Obtain and record the mass of the paraffin coated peat sample, M_{pc}.

8.4 Submerge the coated sample in water in a graduated cylinder and determine the volume of the paraffin coated sample, V_{pc} by observing the volume of water displaced.

8.5 Remove the paraffin coating from the peat sample using a sharp knife.

8.6 Place the remainder of the sample in a moisture content container and record the moist mass of the peat, M' to the accuracy specified for the balance used.

8.7 Dry the sample in an oven at 105°C until a constant mass is reached. Record the mass of dry peat, M_s.

9. Calculation

9.1 To determine the bulk density of the peat, ρ, a correction for the volume of the paraffin coating must be made as follows:

$$\text{Mass of paraffin coating} = M_p = (M_{pc} - M)$$
$$\text{Volume of paraffin coating} = V_p = (M_p/\rho_p)$$

where:
M_{pc} = mass of paraffin coated sample, g,
ρ_p = density of paraffin, g/cm^3, and
M = mass of peat sample, g.

$$\text{Volume of peat sample} = V = (V_{pc} - V_p)$$
$$\text{Bulk density}, \rho = (M/V)$$

where:
V_{pc} = volume of paraffin coated sample, cm^3.

9.2 The moisture content, w_d, in this test method must be obtained in terms of dry mass to allow the dry density, ρ_d, to be calculated.

$$w_d = (M' - M)/M_s$$

where:
M' = moist mass of peat removed from paraffin, g, and
M_s = mass of dry peat, g.

9.3 The dry density, ρ_d, of the peat is calculated as follows:

$$\rho_d = (\rho/1 + w_d)$$

where:
w_d = moisture content in terms of oven dry mass.

10. Report

10.1 The report shall include the following:

10.1.1 Report the bulk density, ρ, and the dry density, ρ_d to the nearest 0.01 g/cm^3 and also state the method used to determine.

10.1.2 Moisture content, w, to the nearest 0.1 %. It is of the utmost importance that it be stated whether the moisture content is in terms of the dry mass or the total mass of the peat.

11. Precision and Bias

11.1 The variability of soil and resultant inability to determine a true reference value prevent development of a meaningful statement of bias. Data are being sought from users to determine the precision of these test methods.

UNCONTROLLED

The American Society for Testing and Materials takes no position respecting the validity of any patent rights asserted in connection with any item mentioned in this standard. Users of this standard are expressly advised that determination of the validity of any such patent rights, and the risk of infringement of such rights, are entirely their own responsibility.

This standard is subject to revision at any time by the responsible technical committee and must be reviewed every five years and if not revised, either reapproved or withdrawn. Your comments are invited either for revision of this standard or for additional standards and should be addressed to ASTM Headquarters. Your comments will receive careful consideration at a meeting of the responsible technical committee, which you may attend. If you feel that your comments have not received a fair hearing you should make your views known to the ASTM Committee on Standards, 1916 Race St., Philadelphia, PA 19103.

Los Alamos National Laboratory **Environmental Restoration Program** Standard Operating Procedure	No: LANL-ER-SOP-11.02 Rev: 0

Particle Size Distribution of Soil/Rock Samples

UNCONTROLLED

	(Print Name)	(Signature)	(Date)
Preparer:	Sandra E. Wagner	Sandra E. Wagner	11-26-91
Quality Review by:	Terry Morgan	Terry Morgan	12/13/91
Technical Review by:	Clarence J. Duffy	Clarence J. Duffy	12/19/91
QPM Approval:	Karen L. Foster	Karen L. Foster	12/23/91
PM Approval:	Robert W. Vocke	Robert W. Vocke	3-4-92

Effective Date: 3-16-92

PARTICLE SIZE DISTRIBUTION OF SOIL/ROCK SAMPLES

1.0 PURPOSE

This procedure describes methods of determining the size distribution of soil and aggregate samples using sieve analysis for fine and coarse aggregates, and using sedimentation process for particle-size soils of less than 75 µm.

2.0 SCOPE

2.1 Applicability

This procedure will be used by field team members working for the Environmental Restoration Program who wish to determine a soil's particle or aggregate size distribution.

2.2 Training

All field team members using this procedure must document that they have both read and understand this procedure and the procedures in Section 1.0, General Instructions.

3.0 DEFINITIONS

There are no unique definitions in this procedure.

4.0 BACKGROUND AND/OR CAUTIONS

Refer to the following attached ASTMs and to the Site Health and Safety plan for hazards and/or cautions.

5.0 EQUIPMENT

Refer to the following attached ASTMs.

6.0 PROCEDURE

Two ASTM procedures are included: In general Method C 136-84a (Attachment A) can be used for material that is larger than a No. 200 sieve (75-µm), and Method D422-63 (Attachment B) should be used for material finer than the 75 µm sieve. Refer to the ASTM methods for exact descriptions and specifications.

Refer to the following attached ASTMs for instructions.

UNCONTROLLED

7.0 REFERENCES

The following procedures are directly associated with this procedure and should be reviewed before field operations:

ASTM STANDARD C 136-84a. 1984. Standard Method for Sieve Analysis of Fine and Coarse Aggregates.

ASTM STANDARD D 422-63. 1963. Standard Method for Particle-Size Analysis of Soils.

LANL-ER-SOPs in Section 1.0, General Instructions.

8.0 RECORDS

A Chain-of-Custody/Request for Analysis form (SOP-01.04) will be maintained and will document the following information:

- Field Sample Number/Identification
- Date and time collected
- Matrix (soil, sludge, core, sediment)
- Analysis requested, if applicable

The laboratory will report the following:

- Test method used
- All calculations and results
- Any deviations, if applicable

9.0 ATTACHMENTS

A. ASTM STANDARD C 136-84a. 1984. Standard Method for Sieve Analysis of Fine and Coarse Aggregates.

B. ASTM STANDARD D 422-63. 1963. Standard Method for Particle-Size Analysis of Soils.

UNCONTROLLED

ASTM STANDARD C 136-84a STANDARD METHOD FOR SIEVE ANALYSIS OF FINE AND COARSE AGGREGATES

Designation: C 136 – 84a

Standard Method for Sieve Analysis of Fine and Coarse Aggregates[1]

This standard is issued under the fixed designation C 136; the number immediately following the designation indicates the year of original adoption or, in the case of revision, the year of last revision. A number in parentheses indicates the year of last reapproval. A superscript epsilon (ε) indicates an editorial change since the last revision or reapproval.

This method has been approved for use by agencies of the Department of Defense and for listing in the DoD Index of Specifications and Standards.

UNCONTROLLED

1. Scope

1.1 This method covers the determination of the particle size distribution of fine and coarse aggregates by sieving.

1.2 Some specifications for aggregates which reference this method contain grading requirements including both coarse and fine fractions. Instructions are included for sieve analysis of such aggregates.

1.3 The values stated in acceptable metric units (SI units and units specifically approved in ASTM E 380 for use with SI units) are to be regarded as the standard. The values in parentheses are provided for information purposes only.

1.4 *This standard may involve hazardous materials, operations, and equipment. This standard does not purport to address all of the safety problems associated with its use. It is the responsibility of whoever uses this standard to consult and establish appropriate safety and health practices and determine the applicability of regulatory limitations prior to use.*

2. Referenced Documents

2.1 *ASTM Standards:*

C 117 Test Method for Materials Finer Than 75-µm (No. 200) Sieve in Mineral Aggregates by Washing[2]

C 670 Practice for Preparing Precision and Bias Statements for Test Methods for Construction Materials[2]

C 702 Practice for Reducing Field Samples of Aggregate to Testing Size[3]

D 75 Practice for Sampling Aggregates[2]

E 11 Specification for Wire-Cloth Sieves for Testing Purposes[2,3]

E 380 Metric Practice[4]

2.2 *AASHTO Standard:*

AASHTO No. T 27 Sieve Analysis of Fine and Coarse Aggregates[6]

3. Summary of Method

3.1 A weighed sample of dry aggregate is separated through a series of sieves of progressively smaller openings for determination of particle size distribution.

4. Significance and Use

4.1 This method is used primarily to determine the grading of materials proposed for use as aggregates or being used as aggregates. The results are used to determine compliance of the particle size distribution with applicable specification requirements and to provide necessary data for control of the production of various aggregate products and mixtures containing aggregates. The data may also be useful in developing relationships concerning porosity and packing.

4.2 Accurate determination of material finer than the 75-µm (No. 200) sieve cannot be achieved by use of this method alone. Test Method C 117 for material finer than 75-µm sieve by washing should be employed.

5. Apparatus

5.1 *Balances*—Balances or scales used in testing fine and coarse aggregate shall have readability and accuracy as follows:

5.1.1 For fine aggregate, readable to 0.1 g and accurate to 0.1 g or 0.1 % of the test load, whichever is greater, at any point within the range of use.

5.1.2 For coarse aggregate, or mixtures of fine and coarse aggregate, readable and accurate to 0.5 g or 0.1 % of the test load, whichever is greater, at any point within the range of use.

5.2 *Sieves*—The sieves shall be mounted on substantial frames constructed in a manner that will prevent loss of material during sieving. The sieves shall conform to Specification E 11. Sieves with openings larger than 125 mm (5 in.) shall have a permissible variation in average opening of ±2 % and shall have a nominal wire diameter of 8.0 mm (5/16 in.) or larger.

NOTE 1—It is recommended that sieves mounted in frames larger than standard 203-mm (8 in.) diameter frames be used for testing coarse aggregate.

5.3 *Mechanical Sieve Shaker*—A mechanical sieve shaker, if used, shall impart a vertical, or lateral and vertical, motion to the sieve, causing the particles thereon to bounce and turn so as to present different orientations to the sieving surface. The sieving action shall be such that the criterion for adequacy of sieving described in 7.4 is met in a reasonable time period.

NOTE 2—Use of a mechanical sieve shaker is recommended when the size of the sample is 20 kg or greater, and may be used for smaller samples, including fine aggregate. Excessive time (more than approximately 10 min) to achieve adequate sieving may result in degradation of the sample. The same mechanical sieve shaker may not be practical for

---

[1] This method is under the jurisdiction of ASTM Committee C-9 on Concrete and Concrete Aggregates and is the direct responsibility of Subcommittee C09.03.05 on Methods of Testing and Specifications for Physical Characteristics of Concrete Aggregates.

Current edition approved Oct. 26, 1984. Published December 1984. Originally published as C 136 – 38 T. Last previous edition C 136 – 83.

[2] *Annual Book of ASTM Standards*, Vols 04.02 and 04.03.

[3] *Annual Book of ASTM Standards*, Vol 04.02.

[4] *Annual Book of ASTM Standards*, Vol 14.02. Excerpts in all volumes.

[5] *Annual Book of ASTM Standards*, Vol 14.02.

[6] Available from American Association of State Highway and Transportation Officials, 444 North Capitol St. N.W., Suite 225, Washington, DC 20001.

all sizes of samples, since the large sieving area needed for practical sieving of a large nominal size coarse aggregate very likely could result in loss of a portion of the sample if used for a small sample of coarse aggregate or fine aggregate.

5.4 *Oven*—An oven of appropriate size capable of maintaining a uniform temperature of 110 ± 5°C (230 ± 9°F).

6. Sampling

6.1 Sample the aggregate in accordance with Practice D 75. The weight of the field sample shall be the weight shown in Practice D 75 or four times the weight required in 6.4 and 6.5 (except as modified in 6.6), whichever is greater.

6.2 Thoroughly mix the sample and reduce it to an amount suitable for testing using the applicable procedures described in Methods C 702. The sample for test shall be approximately of the weight desired when dry and shall be the end result of the reduction. Reduction to an exact predetermined weight shall not be permitted.

NOTE 3—Where sieve analysis, including determination of material finer than the 75-µm sieve, is the only testing proposed, the size of the sample may be reduced in the field to avoid shipping excessive quantities of extra material to the laboratory.

6.3 *Fine Aggregate*—The test sample of fine aggregate shall weigh, after drying, approximately the following amount:

Aggregate with at least 95 % passing a 2.36-mm (No. 8) sieve	100 g
Aggregate with at least 85 % passing a 4.75-mm (No. 4) sieve and more than 5 % retained on a 2.36-mm (No. 8) sieve	500 g

6.4 *Coarse Aggregate*—The weight of the test sample of coarse aggregate shall conform with the following:

Nominal Maximum Size, Square Opening, mm (in.)	Minimum Weight of Test Sample, kg (lb)
9.5 (3/8)	1 (2)
12.5 (1/2)	2 (4)
19.0 (3/4)	5 (11)
25.0 (1)	10 (22)
37.5 (1 1/2)	15 (33)
50 (2)	20 (44)
63 (2 1/2)	35 (77)
75 (3)	60 (130)
90 (3 1/2)	100 (220)
100 (4)	150 (330)
112 (4 1/2)	200 (440)
125 (5)	300 (660)
150 (6)	500 (1100)

6.5 *Coarse and Fine Aggregate Mixtures*—The weight of the test sample of coarse and fine aggregate mixtures shall be the same as for coarse aggregate in 6.4.

6.6 The size of sample required for aggregates with large nominal maximum size is such as to preclude testing except with large mechanical sieve shakers. However, the intent of this method will be satisfied for samples of aggregate larger than 50 mm nominal maximum size if a smaller weight of sample is used, provided that the criterion for acceptance or rejection of the material is based on the average of results of several samples, such that the sample size used times the number of samples averaged equals the minimum weight of sample shown in 6.4.

6.7 In the event that the amount of material finer than the 75-µm (No. 200) sieve is to be determined by Test Method C 117, proceed as follows:

6.7.1 For aggregates with a nominal maximum size of 12.5 mm (1/2 in.) or less, use the same test sample for testing by Test Method C 117 and this method. First test the sample in accordance with Test Method C 117 through the final drying operation, then dry sieve the sample as stipulated in 7.2 through 7.7 of this method.

6.7.2 For aggregates with a nominal maximum size greater than 12.5 mm (1/2 in.), a single test sample may be used as described in 6.7.1, or separate test samples may be used for Test Method C 117 and this method.

6.7.3 Where the specifications require determination of the total amount of material finer than the 75-µm sieve by washing and dry sieving, use the procedure described in 6.7.1.

7. Procedure

7.1 Dry the sample to constant weight at a temperature of 110 ± 5°C (230 ± 9°F).

NOTE 4—For control purposes, particularly where rapid results are desired, it is generally not necessary to dry coarse aggregate for the sieve analysis test. The results are little affected by the moisture content unless: (*1*) the nominal maximum size is smaller than about 12.5 mm (1/2 in.); (*2*) the coarse aggregate contains appreciable material finer than 4.75-mm (No. 4); or (*3*) the coarse aggregate is highly absorptive (a lightweight aggregate, for example). Also, samples may be dried at the higher temperatures associated with the use of hot plates without affecting results, provided steam escapes without generating pressures sufficient to fracture the particles, and temperatures are not so great as to cause chemical breakdown of the aggregate.

7.2 Suitable sieve sizes shall be selected to furnish the information required by the specifications covering the material to be tested. The use of additional sieves may be desirable to provide other information, such as fineness modulus, or to regulate the amount of material on a sieve. Nest the sieves in order of decreasing size of opening from top to bottom and place the sample on the top sieve. Agitate the sieves by hand or by mechanical apparatus for a sufficient period, established by trial or checked by measurement on the actual test sample, to meet the criterion for adequacy or sieving described in 7.4.

7.3 Limit the quantity of material on a given sieve so that all particles have opportunity to reach sieve openings a number of times during the sieving operation. For sieves with openings smaller than 4.75-mm (No. 4), the weight retained on any sieve at the completion of the sieving operation shall not exceed 6 kg/m^2 (4 g/in.^{2}) of sieving surface. For sieves with openings 4.75 mm (No. 4) and larger, the weight in kg/m^2 of sieving surface shall not exceed the product of 2.5 × (sieve opening in mm). In no case shall the weight be so great as to cause permanent deformation of the sieve cloth.

NOTE 5—The 6 kg/m^2 amounts to 194 g for the usual 203-mm (8 in.) diameter sieve. The amount of material retained on a sieve may be regulated by (*1*) the introduction of a sieve with larger openings immediately above the given sieve or (*2*) testing the sample in a number of increments.

7.4 Continue sieving for a sufficient period and in such manner that, after completion, not more than 1 weight % of the residue on any individual sieve will pass that sieve during 1 min of continuous hand sieving performed as follows: Hold the individual sieve, provided with a snug-fitting pan and cover, in a slightly inclined position in one hand. Strike the side of the sieve sharply and with an upward motion against the heel of the other hand at the rate of about 150

UNCONTROLLED

times per minute, turn the sieve about one sixth of a revolution at intervals of about 25 strokes. In determining sufficiency of sieving for sizes larger than the 4.75-mm (No. 4) sieve, limit the material on the sieve to a single layer of particles. If the size of the mounted testing sieves makes the described sieving motion impractical, use 203-mm (8 in.) diameter sieves to verify the sufficiency of sieving.

7.5 In the case of coarse and fine aggregate mixtures, the portion of the sample finer than the 4.75-mm (No. 4) sieve may be distributed among two or more sets of sieves to prevent overloading of individual sieves.

7.5.1 Alternatively, the portion finer than the 4.75-mm (No. 4) sieve may be reduced in size using a mechanical splitter according to Methods C 702. If this procedure is followed, compute the weight of each size increment of the original sample as follows:

$$A = \frac{W_1}{W_2} \times B$$

where:

A = weight of size increment on total sample basis,
W_1 = weight of fraction finer than 4.75-mm (No. 4) sieve in total sample,
W_2 = weight of reduced portion of material finer than 4.75-mm (No. 4) sieve actually sieved, and
B = weight of size increment in reduced portion sieved.

7.6 Unless a mechanical sieve shaker is used, hand sieve particles larger than 75-mm (3 in.) by determining the smallest sieve opening through which each particle will pass. Start the test on the smallest sieve to be used. Rotate the particles, if necessary, in order to determine whether they will pass through a particular opening; however, do not force particles to pass through an opening.

7.7 Determine the weight of each size increment by weighing on a scale or balance conforming to the requirements specified in 5.1 to the nearest 0.1 % of the total original dry sample weight. The total weight of the material after sieving should check closely with original weight of sample placed on the sieves. If the amounts differ by more than 0.3 %, based on the original dry sample weight, the results should not be used for acceptance purposes.

7.8 If the sample has previously been tested by Test Method C 117, add the weight finer than the 75-µm (No. 200) sieve determined by that method to the weight passing the 75-µm (No. 200) sieve by dry sieving of the same sample in this method.

8. Calculation

8.1 Calculate percentages passing, total percentages retained, or percentages in various size fractions to the nearest 0.1 % on the basis of the total weight of the initial dry sample. If the same test sample was first tested by Test Method C 117, include the weight of material finer than the 75-µm (No. 200) size by washing in the sieve analysis calculation; and use the total dry sample weight prior to washing in Test Method C 117 as the basis for calculating all the percentages.

8.2 Calculate the fineness modulus, when required, by adding the total percentages of material in the sample that is coarser than each of the following sieves (cumulative percentages retained), and dividing the sum by 100: 150-µm (No. 100), 300-µm (No. 50), 600-µm (No. 30), 1.18-mm (No. 16), 2.36-mm (No. 8), 4.75-mm (No. 4), 9.5-mm (3/8-in.), 19.0-mm (3/4-in.), 37.5-mm (1 1/2-in.), and larger, increasing in the ratio of 2 to 1.

9. Report

9.1 Depending upon the form of the specifications for use of the material under test, the report shall include the following:

9.1.1 Total percentage of material passing each sieve, or

9.1.2 Total percentage of material retained on each sieve, or

9.1.3 Percentage of material retained between consecutive sieves.

9.2 Report percentages to the nearest whole number, except if the percentage passing the 75-µm (No. 200) sieve is less than 10 %, it shall be reported to the nearest 0.1 %.

9.3 Report the fineness modulus, when required, to the nearest 0.01.

10. Precision

10.1 The estimates of precision of this method listed in Table 1 are based on results from the AASHTO Materials Reference Laboratory Reference Sample Program, with testing conducted by this method and AASHTO Method T 27. While there are differences in the minimum weight of the test sample required for other nominal maximum sizes of aggregate, no differences entered into the testing to affect the determination of these precision indices. The data are based on the analyses of more than 100 paired test results from 40 to 100 laboratories. The values in the table are given for different ranges of percentage of aggregate passing one sieve and retained on the next finer sieve.

UNCONTROLLED

TABLE 1 Precision

	% of Size Fraction Between Consecutive Sieves	Coefficient of Variation (1S %), %[B]	Standard Deviation (1S), %[A]	Acceptable Range of Test Results: (D2S %)[B] % of Avg	Acceptable Range of Test Results: (D2S),[A] %
Coarse Aggregates:[C]					
Single-Operator Precision	0 to 3	30[D]	...	85[D]	...
	3 to 10		1.4[D]		4.0[D]
	10 to 20		0.95		2.7
	20 to 50		1.38		3.9
Multilaboratory Precision	0 to 3	35[D]	...	99[D]	...
	3 to 10		1.06		3.0
	10 to 20		1.66		4.7
	20 to 30		2.01		5.7
	30 to 40		2.44		6.9
	40 to 50		3.18		9.0
Fine Aggregates:					
Single-Operator Precision	0 to 3		0.14		0.4
	3 to 10		0.43		1.2
	10 to 20		0.60		1.7
	20 to 30		0.64		1.8
	30 to 40		0.71		2.0
	40 to 50		...		...
Multilaboratory Precision	0 to 3		0.21		0.6
	3 to 10		0.57		1.6
	10 to 20		0.95		2.7
	20 to 30		1.24		3.5
	30 to 40		1.41		4.0
	40 to 50		...		...

[A] These numbers represent, respectively, the (1S) and (D2S) limits as described in Practice C 670.
[B] These numbers represent, respectively, the (1S %) and (D2S %) limits as described in Practice C 670.
[C] The precision estimates are based on coarse aggregates with nominal maximum size of 19.0 mm (¾ in.).
[D] These values are from precision indices first included in Method C 136 – 76. Other indices were developed in 1982 from more recent AASHTO Materials Reference Laboratory sample data, which did not provide sufficient information to revise the values so noted.

UNCONTROLLED

The American Society for Testing and Materials takes no position respecting the validity of any patent rights asserted in connection with any item mentioned in this standard. Users of this standard are expressly advised that determination of the validity of any such patent rights, and the risk of infringement of such rights, are entirely their own responsibility.

This standard is subject to revision at any time by the responsible technical committee and must be reviewed every five years and if not revised, either reapproved or withdrawn. Your comments are invited either for revision of this standard or for additional standards and should be addressed to ASTM Headquarters. Your comments will receive careful consideration at a meeting of the responsible technical committee, which you may attend. If you feel that your comments have not received a fair hearing you should make your views known to the ASTM Committee on Standards, 1916 Race St., Philadelphia, PA 19103.

ASTM STANDARD D 422-63, STANDARD METHOD FOR PARTICLE-SIZE ANALYSIS OF SOILS

Designation: D 422 – 63 (Reapproved 1972)[ε1]

Standard Method for Particle-Size Analysis of Soils[1]

This standard is issued under the fixed designation D 422; the number immediately following the designation indicates the year of original adoption or, in the case of revision, the year of last revision. A number in parentheses indicates the year of last reapproval. A superscript epsilon (ε) indicates an editorial change since the last revision or reapproval.

[ε1] NOTE—Section 2 was added editorially and subsequent sections renumbered in July 1984

UNCONTROLLED

1. Scope

1.1 This method covers the quantitative determination of the distribution of particle sizes in soils. The distribution of particle sizes larger than 75 μm (retained on the No. 200 sieve) is determined by sieving, while the distribution of particle sizes smaller than 75 μm is determined by a sedimentation process, using a hydrometer to secure the necessary data (Notes 1 and 2).

NOTE 1—Separation may be made on the No. 4 (4.75-mm), No. 40 (425-μm), or No. 200 (75-μm) sieve instead of the No. 10. For whatever sieve used, the size shall be indicated in the report.

NOTE 2—Two types of dispersion devices are provided: (1) a high-speed mechanical stirrer, and (2) air dispersion. Extensive investigations indicate that air-dispersion devices produce a more positive dispersion of plastic soils below the 20-μm size and appreciably less degradation on all sizes when used with sandy soils. Because of the definite advantages favoring air dispersion, its use is recommended. The results from the two types of devices differ in magnitude, depending upon soil type, leading to marked differences in particle size distribution, especially for sizes finer than 20 μm.

2. Referenced Documents

2.1 *ASTM Standards:*

D 421 Practice for Dry Preparation of Soil Samples for Particle-Size Analysis and Determination of Soil Constants[2]

E 11 Specification for Wire-Cloth Sieves for Testing Purposes[3]

E 100 Specification for ASTM Hydrometers[4]

3. Apparatus

3.1 *Balances*—A balance sensitive to 0.01 g for weighing the material passing a No. 10 (2.00-mm) sieve, and a balance sensitive to 0.1 % of the mass of the sample to be weighed for weighing the material retained on a No. 10 sieve.

3.2 *Stirring Apparatus*—Either apparatus A or B may be used.

3.2.1 Apparatus A shall consist of a mechanically operated stirring device in which a suitably mounted electric motor turns a vertical shaft at a speed of not less than 10 000 rpm without load. The shaft shall be equipped with a replaceable stirring paddle made of metal, plastic, or hard rubber, as shown in Fig. 1. The shaft shall be of such length that the stirring paddle will operate not less than ¾ in. (19.0 mm) nor more than 1½ in. (38.1 mm) above the bottom of the dispersion cup. A special dispersion cup conforming to either of the designs shown in Fig. 2 shall be provided to hold the sample while it is being dispersed.

3.2.2 Apparatus B shall consist of an air-jet dispersion cup[5] (Note 3) conforming to the general details shown in Fig. 3 (Notes 4 and 5).

NOTE 3—The amount of air required by an air-jet dispersion cup is of the order of 2 ft^3/min; some small air compressors are not capable of supplying sufficient air to operate a cup.

NOTE 4—Another air-type dispersion device, known as a dispersion tube, developed by Chu and Davidson at Iowa State College, has been shown to give results equivalent to those secured by the air-jet dispersion cups. When it is used, soaking of the sample can be done in the sedimentation cylinder, thus eliminating the need for transferring the slurry. When the air-dispersion tube is used, it shall be so indicated in the report.

NOTE 5—Water may condense in air lines when not in use. This water must be removed, either by using a water trap on the air line, or by blowing the water out of the line before using any of the air for dispersion purposes.

3.3 *Hydrometer*—An ASTM hydrometer, graduated to read in either specific gravity of the suspension or grams per litre of suspension, and conforming to the requirements for hydrometers 151H or 152H in Specifications E 100. Dimensions of both hydrometers are the same, the scale being the only item of difference.

3.4 *Sedimentation Cylinder*—A glass cylinder essentially 18 in. (457 mm) in height and 2½ in. (63.5 mm) in diameter, and marked for a volume of 1000 mL. The inside diameter shall be such that the 1000-mL mark is 36 ± 2 cm from the bottom on the inside.

3.5 *Thermometer*—A thermometer accurate to 1°F (0.5°C).

3.6 *Sieves*—A series of sieves, of square-mesh woven-wire cloth, conforming to the requirements of Specification E 11. A full set of sieves includes the following (Note 6):

[1] This method is under the jurisdiction of ASTM Committee D-18 on Soil and Rock and is the direct responsibility of Subcommittee D18.03 on Texture, Plasticity, and Density Characteristics of Soils.

Current edition approved Nov. 21, 1963. Originally published 1935. Replaces D 422 – 62.

[2] *Annual Book of ASTM Standards*, Vol 04.08.

[3] *Annual Book of ASTM Standards*, Vol 14.02.

[4] *Annual Book of ASTM Standards*, Vol 14.03.

[5] Detailed working drawings for this cup are available at a nominal cost from the American Society for Testing and Materials, 1916 Race St., Philadelphia, PA 19103. Order Adjunct No. 12-404220-00.

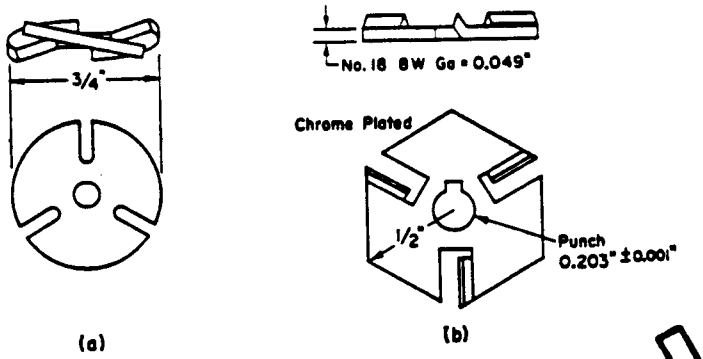

Metric Equivalents

in.	0.001	0.049	0.203	1/2	3/4
mm	0.03	1.24	5.16	12.7	19.0

FIG. 1 Detail of Stirring Paddles

3-in. (75-mm)
2-in. (50-mm)
1½-in. (37.5-mm)
1-in. (25.0-mm)
¾-in. (19.0-mm)
⅜-in. (9.5-mm)
No. 4 (4.75-mm)

No. 10 (2.00-mm)
No. 20 (850-μm)
No. 40 (425-μm)
No. 60 (250-μm)
No. 140 (106-μm)
No. 200 (75-μm)

NOTE 6—A set of sieves giving uniform spacing of points for the graph, as required in Section 17, may be used if desired. This set consists of the following sieves:

3-in. (75-mm)
1½-in. (37.5-mm)
1-in. (25.0-mm)
⅜-in. (9.5-mm)
No. 4 (4.75-mm)
No. 8 (2.36-mm)

No. 16 (1.18-mm)
No. 30 (600-μm)
No. 50 (300-μm)
No. 100 (150-μm)
No. 200 (75-μm)

3.7 *Water Bath or Constant-Temperature Room*—A water bath or constant-temperature room for maintaining the soil suspension at a constant temperature during the hydrometer analysis. A satisfactory water tank is an insulated tank that maintains the temperature of the suspension at a convenient constant temperature at or near 68°F (20°C). Such a device is illustrated in Fig. 4. In cases where the work is performed in a room at an automatically controlled constant temperature, the water bath is not necessary.

3.8 *Beaker*—A beaker of 250-mL capacity.

3.9 *Timing Device*—A watch or clock with a second hand.

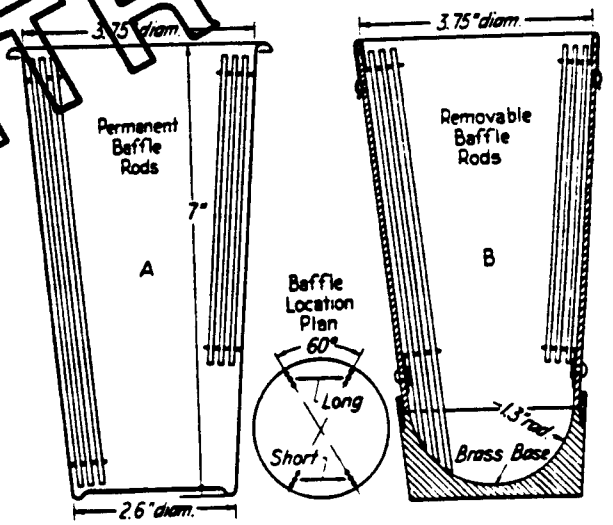

Metric Equivalents

in.	1.3	2.6	3.75
mm	33	66	95.2

FIG. 2 Dispersion Cups of Apparatus

4. Dispersing Agent

4.1 A solution of sodium hexametaphosphate (sometimes called sodium metaphosphate) shall be used in distilled or demineralized water, at the rate of 40 g of sodium hexametaphosphate/litre of solution (Note 7).

NOTE 7—Solutions of this salt, if acidic, slowly revert or hydrolyze back to the orthophosphate form with a resultant decrease in dispersive action. Solutions should be prepared frequently (at least once a month) or adjusted to pH of 8 or 9 by means of sodium carbonate. Bottles containing solutions should have the date of preparation marked on them.

4.2 All water used shall be either distilled or demineralized water. The water for a hydrometer test shall be brought to the temperature that is expected to prevail during the hydrometer test. For example, if the sedimentation cylinder is to be placed in the water bath, the distilled or demineralized water to be used shall be brought to the temperature of the controlled water bath; or, if the sedimentation cylinder is used in a room with controlled temperature, the water for the test shall be at the temperature of the room. The basic temperature for the hydrometer test is 68°F (20°C). Small variations of temperature do not introduce differences that are of practical significance and do not prevent the use of corrections derived as prescribed.

UNCONTROLLED

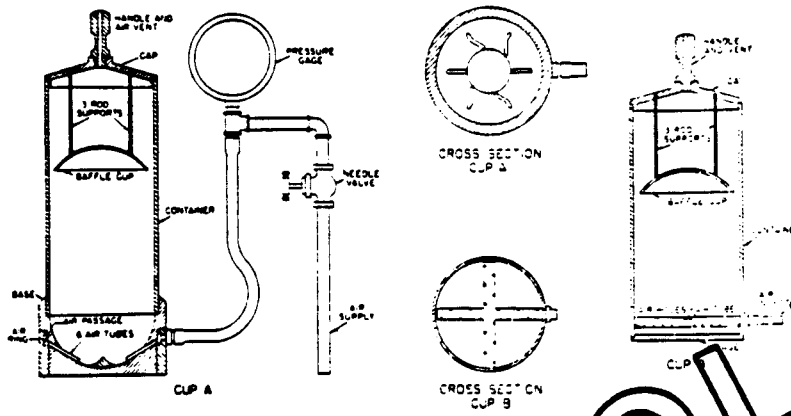

FIG. 3 Air-Jet Dispersion Cups of Apparatus B

UNCONTROLLED

5. Test Sample

5.1 Prepare the test sample for mechanical analysis as outlined in Practice D 421. During the preparation procedure the sample is divided into two portions. One portion contains only particles retained on the No. 10 (2.00-mm) sieve while the other portion contains only particles passing the No. 10 sieve. The mass of air-dried soil selected for purpose of tests, as prescribed in Practice D 421, shall be sufficient to yield quantities for mechanical analysis as follows:

5.1.1 The size of the portion retained on the No. 10 sieve shall depend on the maximum size of particle, according to the following schedule:

Nominal Diameter of Largest Particles, in. (mm)	Approximate Minimum Mass of Portion, g
⅜ (9.5)	500
¾ (19.0)	1000
1 (25.4)	2000
1½ (38.1)	3000
2 (50.8)	4000
3 (76.2)	5000

5.1.2 The size of the portion passing the No. 10 sieve shall be approximately 115 g for sandy soils and approximately 65 g for silt and clay soils.

5.2 Provision is made in Section 5 of Practice D 421 for weighing of the air-dry soil selected for purpose of tests, the separation of the soil on the No. 10 sieve by dry-sieving and washing, and the weighing of the washed and dried fraction retained on the No. 10 sieve. From these two masses the percentages retained and passing the No. 10 sieve can be calculated in accordance with 12.1.

NOTE 8—A check on the mass values and the thoroughness of pulverization of the clods may be secured by weighing the portion passing the No. 10 sieve and adding this value to the mass of the washed and oven-dried portion retained on the No. 10 sieve.

SIEVE ANALYSIS OF PORTION RETAINED ON NO. 10 (2.00-mm) SIEVE

6. Procedure

6.1 Separate the portion retained on the No. 10 (2.00-mm) sieve into a series of fractions using the 3-in. (75-mm), 2-in. (50-mm), 1½-in. (37.5-mm), 1-in. (25.0-mm), ¾-in. (19.0-mm), ⅜-in. (9.5-mm), No. 4 (4.75-mm), and No. 10 sieves, or as many as may be needed depending on the sample, or upon the specifications for the material under test.

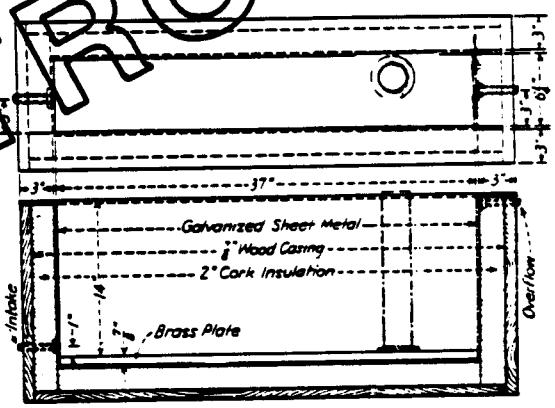

Metric Equivalents

in	⅞	1	3	6¼	14	37
mm	22.2	25.4	76.2	158.2	356	940

FIG. 4 Insulated Water Bath

6.2 Conduct the sieving operation by means of a lateral and vertical motion of the sieve, accompanied by a jarring action in order to keep the sample moving continuously over the surface of the sieve. In no case turn or manipulate fragments in the sample through the sieve by hand. Continue sieving until not more than 1 mass % of the residue on a sieve passes that sieve during 1 min of sieving. When mechanical sieving is used, test the thoroughness of sieving by using the hand method of sieving as described above.

6.3 Determine the mass of each fraction on a balance conforming to the requirements of 3.1. At the end of weighing, the sum of the masses retained on all the sieves used should equal closely the original mass of the quantity sieved.

UNCONTROLLED

HYDROMETER AND SIEVE ANALYSIS OF PORTION PASSING THE NO. 10 (2.00-mm) SIEVE

7. Determination of Composite Correction for Hydrometer Reading

7.1 Equations for percentages of soil remaining in suspension, as given in 14.3, are based on the use of distilled or demineralized water. A dispersing agent is used in the water, however, and the specific gravity of the resulting liquid is appreciably greater than that of distilled or demineralized water.

7.1.1 Both soil hydrometers are calibrated at 68°F (20°C), and variations in temperature from this standard temperature produce inaccuracies in the actual hydrometer readings. The amount of the inaccuracy increases as the variation from the standard temperature increases.

7.1.2 Hydrometers are graduated by the manufacturer to be read at the bottom of the meniscus formed by the liquid on the stem. Since it is not possible to secure readings of soil suspensions at the bottom of the meniscus, readings must be taken at the top and a correction applied.

7.1.3 The net amount of the corrections for the three items enumerated is designated as the composite correction, and may be determined experimentally.

7.2 For convenience, a graph or table of composite corrections for a series of 1° temperature differences for the range of expected test temperatures may be prepared and used as needed. Measurement of the composite corrections may be made at two temperatures spanning the range of expected test temperatures, and corrections for the intermediate temperatures calculated assuming a straight-line relationship between the two observed values.

7.3 Prepare 1000 mL of liquid composed of distilled or demineralized water and dispersing agent in the same proportion as will prevail in the sedimentation (hydrometer) test. Place the liquid in a sedimentation cylinder and the cylinder in the constant-temperature water bath, set for one of the two temperatures to be used. When the temperature of the liquid becomes constant, insert the hydrometer, and, after a short interval to permit the hydrometer to come to the temperature of the liquid, read the hydrometer at the top of the meniscus formed on the stem. For hydrometer 151H the composite correction is the difference between this reading and one; for hydrometer 152H it is the difference between the reading and zero. Bring the liquid and the hydrometer to the other temperature to be used, and secure the composite correction as before.

8. Hygroscopic Moisture

8.1 When the sample is weighed for the hydrometer test, weigh out an auxiliary portion of from 10 to 15 g in a small metal or glass container, dry the sample to a constant mass in an oven at 230 ± 9°F (110 ± 5°C), and weigh again. Record the masses.

9. Dispersion of Soil Sample

9.1 When the soil is mostly of the clay and silt sizes, weigh out a sample of air-dry soil of approximately 50 g. When the soil is mostly sand the sample should be approximately 100 g.

9.2 Place the sample in the 250-mL beaker and cover with 125 mL of sodium hexametaphosphate solution (40 g/L). Stir until the soil is thoroughly wetted. Allow to soak for at least 16 h.

9.3 At the end of the soaking period, disperse the sample further, using either stirring apparatus A or B. If stirring apparatus A is used, transfer the soil - water slurry from the beaker into the special dispersion cup shown in Fig. 2, washing any residue from the beaker into the cup with distilled or demineralized water (Note 9). Add distilled or demineralized water, if necessary, so that the cup is more than half full. Stir for a period of 1 min.

NOTE 9—A large size syringe is a convenient device for handling the water in the washing operation. Other devices include the wash-water bottle and a hose with nozzle connected to a pressurized distilled water tank.

9.4 If stirring apparatus B (Fig. 3) is used, remove the cover cap and connect the cup to a compressed air supply by means of a rubber hose. A air gage must be on the line between the cup and the control valve. Open the control valve so that the gage indicates 1 psi (7 kPa) pressure (Note 10). Transfer the soil - water slurry from the beaker to the air-jet dispersion cup by washing with distilled or demineralized water. Add distilled or demineralized water, if necessary, so that the total volume in the cup is 250 mL, but no more.

NOTE 10—The initial air pressure of 1 psi is required to prevent the soil - water mixture from entering the air-jet chamber when the mixture is transferred to the dispersion cup.

9.5 Place the cover cap on the cup and open the air control valve until the gage pressure is 20 psi (140 kPa). Disperse the soil according to the following schedule:

Plasticity Index	Dispersion Period, min
Under 5	5
6 to 20	10
Over 20	15

Soils containing large percentages of mica need be dispersed for only 1 min. After the dispersion period, reduce the gage pressure to 1 psi preparatory to transfer of soil - water slurry to the sedimentation cylinder.

10. Hydrometer Test

10.1 Immediately after dispersion, transfer the soil - water slurry to the glass sedimentation cylinder, and add distilled or demineralized water until the total volume is 1000 mL.

10.2 Using the palm of the hand over the open end of the cylinder (or a rubber stopper in the open end), turn the cylinder upside down and back for a period of 1 min to complete the agitation of the slurry (Note 11). At the end of 1 min set the cylinder in a convenient location and take hydrometer readings at the following intervals of time (measured from the beginning of sedimentation), or as many as may be needed, depending on the sample or the specification for the material under test: 2, 5, 15, 30, 60, 250, and 1440 min. If the controlled water bath is used, the sedimentation cylinder should be placed in the bath between the 2- and 5-min readings.

NOTE 11—The number of turns during this minute should be approximately 60, counting the turn upside down and back as two turns.

any soil remaining in the bottom of the cylinder during the first few turns should be loosened by vigorous shaking of the cylinder while it is in the inverted position.

10.3 When it is desired to take a hydrometer reading, carefully insert the hydrometer about 20 to 25 s before the reading is due to approximately the depth it will have when the reading is taken. As soon as the reading is taken, carefully remove the hydrometer and place it with a spinning motion in a graduate of clean distilled or demineralized water.

NOTE 12—It is important to remove the hydrometer immediately after each reading. Readings shall be taken at the top of the meniscus formed by the suspension around the stem, since it is not possible to secure readings at the bottom of the meniscus.

10.4 After each reading, take the temperature of the suspension by inserting the thermometer into the suspension.

11. Sieve Analysis

11.1 After taking the final hydrometer reading, transfer the suspension to a No. 200 (75-μm) sieve and wash with tap water until the wash water is clear. Transfer the material on the No. 200 sieve to a suitable container, dry in an oven at 230 ± 9°F (110 ± 5°C) and make a sieve analysis of the portion retained, using as many sieves as desired, or required for the material, or upon the specification of the material under test.

CALCULATIONS AND REPORT

12. Sieve Analysis Values for the Portion Coarser than the No. 10 (2.00-mm) Sieve

12.1 Calculate the percentage passing the No. 10 sieve by dividing the mass passing the No. 10 sieve by the mass of soil originally split on the No. 10 sieve, and multiplying the result by 100. To obtain the mass passing the No. 10 sieve, subtract the mass retained on the No. 10 sieve from the original mass.

12.2 To secure the total mass of soil passing the No. 4 (4.75-mm) sieve, add to the mass of the material passing the No. 10 sieve the mass of the fraction passing the No. 4 sieve and retained on the No. 10 sieve. To secure the total mass of soil passing the ⅜-in. (9.5-mm) sieve, add to the total mass of soil passing the No. 4 sieve, the mass of the fraction passing the ⅜-in. sieve and retained on the No. 4 sieve. For the remaining sieves, continue the calculations in the same manner.

12.3 To determine the total percentage passing for each sieve, divide the total mass passing (see 12.2) by the total mass of sample and multiply the result by 100.

13. Hygroscopic Moisture Correction Factor

13.1 The hydroscopic moisture correction factor is the ratio between the mass of the oven-dried sample and the air-dry mass before drying. It is a number less than one, except when there is no hygroscopic moisture.

14. Percentages of Soil in Suspension

14.1 Calculate the oven-dry mass of soil used in the hydrometer analysis by multiplying the air-dry mass by the hygroscopic moisture correction factor.

TABLE 1 Values of Correction Factor, *a*, for Different Specific Gravities of Soil Particles[A]

Specific Gravity	Correction Factor[A]
2.95	0.94
2.90	0.95
2.85	0.96
2.80	0.97
2.75	0.98
2.70	0.99
2.65	1.00
2.60	1.01
2.55	1.02
2.50	1.03
2.45	1.05

[A] For use in equation for percentage of soil remaining in suspension when using Hydrometer 152H.

14.2 Calculate the mass of a total sample represented by the mass of soil used in the hydrometer test by dividing the oven-dry mass used by the percentage passing the No. 10 (2.00-mm) sieve, and multiplying the result by 100. This value is the weight W in the equation for percentage remaining in suspension.

14.3 The percentage of soil remaining in suspension at the level at which the hydrometer is measuring the density of the suspension may be calculated as follows (Note 13): For hydrometer 151H:

$$P = [(100\,000/W) \times G/(G - G_1)](R - G_1)$$

NOTE 13—The bracketed portion of the equation for hydrometer 151H is constant for a series of readings and may be calculated first and then multiplied by the portion in the parentheses.

For hydrometer 152H:

$$P = (Ra/W) \times 100$$

where:

a = correction faction to be applied to the reading of hydrometer 152H. (Values shown on the scale are computed using a specific gravity of 2.65. Correction factors are given in Table 1),

P = percentage of soil remaining in suspension at the level at which the hydrometer measures the density of the suspension,

R = hydrometer reading with composite correction applied (Section 7),

W = oven-dry mass of soil in a total test sample represented by mass of soil dispersed (see 14.2), g,

G = specific gravity of the soil particles, and

G_1 = specific gravity of the liquid in which soil particles are suspended. Use numerical value of one in both instances in the equation. In the first instance any possible variation produces no significant effect, and in the second instance, the composite correction for R is based on a value of one for G_1.

15. Diameter of Soil Particles

15.1 The diameter of a particle corresponding to the percentage indicated by a given hydrometer reading shall be calculated according to Stokes' law (Note 14), on the basis that a particle of this diameter was at the surface of the suspension at the beginning of sedimentation and had settled to the level at which the hydrometer is measuring the density of the suspension. According to Stokes' law:

$$D = \sqrt{[30n/980(G - G_1)] \times L/T}$$

UNCONTROLLED

where:

D = diameter of particle, mm,

n = coefficient of viscosity of the suspending medium (in this case water) in poises (varies with changes in temperature of the suspending medium),

L = distance from the surface of the suspension to the level at which the density of the suspension is being measured, cm. (For a given hydrometer and sedimentation cylinder, values vary according to the hydrometer readings. This distance is known as effective depth (Table 2)),

T = interval of time from beginning of sedimentation to the taking of the reading, min,

G = specific gravity of soil particles, and

G_1 = specific gravity (relative density) of suspending medium (value may be used as 1.000 for all practical purposes).

NOTE 14—Since Stokes' law considers the terminal velocity of a single sphere falling in an infinity of liquid, the sizes calculated represent the diameter of spheres that would fall at the same rate as the soil particles.

15.2 For convenience in calculations the above equation may be written as follows:

$$D = K\sqrt{L/T}$$

where:

K = constant depending on the temperature of the suspension and the specific gravity of the soil particles. Values of K for a range of temperatures and specific gravities are given in Table 3. The value of K does not change for a series of readings constituting a test, while values of L and T do vary.

15.3 Values of D may be computed with sufficient accuracy, using an ordinary 10-in. slide rule.

NOTE 15—The value of L is divided by T using the A- and B-scales, the square root being indicated on the D-scale. Without ascertaining the value of the square root it may be multiplied by K, using either the C- or CI-scale.

16. Sieve Analysis Values for Portion Finer than No. 10 (2.00-mm) Sieve

16.1 Calculation of percentages passing the various sieves used in sieving the portion of the sample from the hydrometer test involves several steps. The first step is to calculate the mass of the fraction that would have been retained on the No. 10 sieve had it not been removed. This mass is equal to the total percentage retained on the No. 10 sieve (100 minus total percentage passing) times the mass of the total sample represented by the mass of soil used (as calculated in 14.2), and the result divided by 100.

16.2 Calculate next the total mass passing the No. 200 sieve. Add together the fractional masses retained on all the sieves, including the No. 10 sieve, and subtract this sum from the mass of the total sample (as calculated in 14.2).

16.3 Calculate next the total masses passing each of the other sieves, in a manner similar to that given in 12.2.

16.4 Calculate last the total percentages passing by dividing the total mass passing (as calculated in 16.3) by the total mass of sample (as calculated in 14.2), and multiply the result by 100.

TABLE 2 Values of Effective Depth Based on Hydrometer and Sedimentation Cylinder of Specified Sizes[A]

Hydrometer 151H		Hydrometer 152H			
Actual Hydrometer Reading	Effective Depth, L, cm	Actual Hydrometer Reading	Effective Depth, L, cm	Actual Hydrometer Reading	Effective Depth, L, cm
1.000	16.3	0	16.3	31	11.2
1.001	16.0	1	16.1	32	11.1
1.002	15.8	2	16.0	33	10.9
1.003	15.5	3	15.8	34	10.7
1.004	15.2	4	15.6	35	10.6
1.005	15.0	5	15.5		
1.006	14.7	6	15.3	36	10.4
1.007	14.4	7	15.2	37	10.2
1.008	14.2	8	15.0	38	10.1
1.009	13.9	9	14.8	39	9.9
1.010	13.7	10	14.7	40	9.7
1.011	13.4	11	14.5	41	9.6
1.012	13.1	12	14.3	42	9.4
1.013	12.9	13	14.2	43	9.2
1.014	12.6	14	14.0	44	9.1
1.015	12.3	15	13.8	45	8.9
1.016	12.1	16	13.7	46	8.8
1.017	11.8	17	13.5	47	8.6
1.018	11.5	18	13.3	48	8.4
1.019	11.3	19	13.2	49	8.3
1.020	11.0	20	13.0	50	8.1
1.021	10.7	21	12.9	51	7.9
1.022	10.5	22	12.7	52	7.8
1.023	10.2	23	12.5	53	7.6
1.024	10.0	24	12.4	54	7.4
1.025	9.7	25	12.2	55	7.3
1.026	9.4	26	12.0	56	7.1
1.027	9.2	27	11.9	57	7.0
1.028	8.9	28	11.7	58	6.8
1.029	8.6	29	11.5	59	6.6
1.030	8.4	30	11.4	60	6.5
1.031	8.1				
1.032	7.8				
1.033	7.6				
1.034	7.3				
1.035	7.0				
1.036	6.8				
1.037	6.5				
1.038	6.2				

[A] Values of effective depth are calculated from the equation:

$$L = L_1 + \tfrac{1}{2}[L_2 - (V_B/A)]$$

where:

L = effective depth, cm,

L_1 = distance along the stem of the hydrometer from the top of the bulb to the mark for a hydrometer reading, cm,

L_2 = overall length of the hydrometer bulb, cm,

V_B = volume of hydrometer bulb, cm³, and

A = cross-sectional area of sedimentation cylinder, cm²

Values used in calculating the values in Table 2 are as follows:

For both hydrometers, 151H and 152H:

L_2 = 14.0 cm

V_B = 67.0 cm³

A = 27.8 cm²

For hydrometer 151H:

L_1 = 10.5 cm for a reading of 1.000

= 2.3 cm for a reading of 1.031

For hydrometer 152H:

L_1 = 10.5 cm for a reading of 0 g/litre

= 2.3 cm for a reading of 50 g/litre

17. Graph

17.1 When the hydrometer analysis is performed, a graph

UNCONTROLLED

TABLE 3 Values of K for Use in Equation for Computing Diameter of Particle in Hydrometer Analysis

Temperature, °C	Specific Gravity of Soil Particles								
	2.45	2.50	2.55	2.60	2.65	2.70	2.75	2.80	2.85
16	0.01510	0.01505	0.01481	0.01457	0.01435	0.01414	0.01394	0.01374	0.01356
17	0.01511	0.01486	0.01462	0.01439	0.01417	0.01396	0.01376	0.01356	0.01338
18	0.01492	0.01467	0.01443	0.01421	0.01399	0.01378	0.01359	0.01339	0.01321
19	0.01474	0.01449	0.01425	0.01403	0.01382	0.01361	0.01342	0.1323	0.01305
20	0.01456	0.01431	0.01408	0.01386	0.01365	0.01344	0.01325	0.01307	0.01289
21	0.01438	0.01414	0.01391	0.01369	0.01348	0.01328	0.01309	0.01291	0.01273
22	0.01421	0.01397	0.01374	0.01353	0.01332	0.01312	0.01294	0.01276	0.01258
23	0.01404	0.01381	0.01358	0.01337	0.01317	0.01297	0.01279	0.01261	0.01243
24	0.01388	0.01365	0.01342	0.01321	0.01301	0.01282	0.01264	0.01246	0.01229
25	0.01372	0.01349	0.01327	0.01306	0.01286	0.01267	0.01249	0.01232	0.01215
26	0.01357	0.01334	0.01312	0.01291	0.01272	0.01253	0.01235	0.01218	0.01201
27	0.01342	0.01319	0.01297	0.01277	0.01258	0.01239	0.01221	0.01204	0.01188
28	0.01327	0.01304	0.01283	0.01264	0.01244	0.01255	0.01208	0.01191	0.01175
29	0.01312	0.01290	0.01269	0.01249	0.01230	0.01212	0.01195	0.01178	0.01162
30	0.01298	0.01276	0.01256	0.01236	0.01217	0.01199	0.01182	0.01165	0.01149

of the test results shall be made, plotting the diameters of the particles on a logarithmic scale as the abscissa and the percentages smaller than the corresponding diameters to an arithmetic scale as the ordinate. When the hydrometer analysis is not made on a portion of the soil, the preparation of the graph is optional, since values may be secured directly from tabulated data.

18. Report

18.1 The report shall include the following:

18.1.1 Maximum size of particles,

18.1.2 Percentage passing (or retained on) each sieve, which may be tabulated or presented by plotting on a graph (Note 16),

18.1.3 Description of sand and gravel particles:

18.1.3.1 Shape—rounded or angular,

18.1.3.2 Hardness—hard and durable, soft, or weathered and friable,

18.1.4 Specific gravity, if unusually high or low,

18.1.5 Any difficulty in dispersing the fraction passing the No. 10 (2.00-mm) sieve, indicating any change in type and amount of dispersing agent, and

18.1.6 The dispersion device used and the length of the dispersion period.

NOTE 16—This tabulation of graph represents the gradation of the sample tested. If particles larger than those contained in the sample were removed before testing, the report shall so state giving the amount and maximum size.

18.2 For materials tested for compliance with definite specifications, the fractions called for in such specifications shall be reported. The fractions smaller than the No. 10 sieve shall be read from the graph.

18.3 For materials for which compliance with definite specifications is not indicated and when the soil is composed almost entirely of particles passing the No. 4 (4.75-mm) sieve, the results read from the graph may be reported as follows:

(1) Gravel, passing 3-in. and retained on No. 4 sieve %
(2) Sand, passing No. 4 sieve and retained on No. 200 sieve %
  (a) Coarse sand, passing No. 4 sieve and retained on No. 10 sieve %
  (b) Medium sand, passing No. 10 sieve and retained on No. 40 sieve %
  (c) Fine sand, passing No. 40 sieve and retained on No. 200 sieve %
(3) Silt size, 0.074 to 0.005 mm %
(4) Clay size, smaller than 0.005 mm %
  Colloids, smaller than 0.001 mm %

18.4 For materials for which compliance with definite specifications is not indicated and when the soil contains material retained on the No. 4 sieve sufficient to require a sieve analysis on that portion, the results may be reported as follows (Note 17):

SIEVE ANALYSIS

Sieve Size	Percentage Passing
3-in.	
2-in.	
1½-in.	
1-in.	
⅜-in.	
⅛-in.	
No. 4 (4.75-mm)	
No. 10 (2.00-mm)	
No. 40 (425-μm)	
No. 200 (75-μm)	

HYDROMETER ANALYSIS

0.074 mm	
0.005 mm	
0.001 mm	

NOTE 17—No. 8 (2.36-mm) and No. 50 (300-μm) sieves may be substituted for No. 10 and No. 40 sieves.

The American Society for Testing and Materials takes no position respecting the validity of any patent rights asserted in connection with any item mentioned in this standard. Users of this standard are expressly advised that determination of the validity of any such patent rights, and the risk of infringement of such rights, are entirely their own responsibility.

This standard is subject to revision at any time by the responsible technical committee and must be reviewed every five years and if not revised, either reapproved or withdrawn. Your comments are invited either for revision of this standard or for additional standards and should be addressed to ASTM Headquarters. Your comments will receive careful consideration at a meeting of the responsible technical committee, which you may attend. If you feel that your comments have not received a fair hearing you should make your views known to the ASTM Committee on Standards, 1916 Race St., Philadelphia, PA 19103.

UNCONTROLLED

Los Alamos National Laboratory **Environmental Restoration Program** Standard Operating Procedure	No: LANL-ER-SOP-11.03 Rev: 0

Permeability of Granular Soils

UNCONTROLLED

Preparer:	Sandra E. Wagner (Print Name)	Sandra E. Wagner (Signature)	11-26-91 (Date)
Quality Review by:	Terry Morgan (Print Name)	Terry Morgan (Signature)	12/13/91 (Date)
Technical Review by:	Clarence J. Duffy (Print Name)	Clarence J. Duffy (Signature)	12/19/91 (Date)
QPRL Approval:	Karen L Warthen (Print Name)	Karen L Warthen (Signature)	3/4/92 (Date)
PM Approval:	Robert W Vocke (Print Name)	Robert W Vocke (Signature)	3-4-92 (Date)

Effective Date: 3.16.92

PERMEABILITY OF GRANULAR SOILS

1.0 PURPOSE

The purpose of this procedure is to show the method in which the coefficient of permeability by a constant-head method for the laminar flow of water through granular soils can be determined.

2.0 SCOPE

2.1 Applicability

This procedure is applicable to all field team members establishing representative values of the coefficient of permeability of granular soils for the Environmental Restoration program.

2.2 Training

Field team members using this procedure must document that they have read and understand this procedure and the procedures in Section 1.0, General Instructions.

3.0 DEFINITIONS

There are no unique definitions in this procedure.

4.0 BACKGROUND AND/OR CAUTIONS

Refer to the attached ASTM Standard Method D2434-68, and to the Site Health and Safety plan for hazards and/or cautions.

5.0 EQUIPMENT

Refer to the attached ASTM Standard Method D2434-68.

6.0 PROCEDURE

Refer to the attached ASTM Standard Method D2434-68.

7.0 REFERENCES

The following procedures are directly associated with this procedure and should be reviewed before field operations:

ASTM STANDARD D2434-68. 1968. Standard Test Method for Permeability of Granular Soil (Constant Head).

UNCONTROLLED

LANL-ER-SOPs in Section 1.0, General Instructions.

8.0 RECORDS

The records produced during this procedure will include a Chain-of-Custody/Request for Analysis form (SOP-01.04) which will have the following information:

- Field Sample Number/Identification
- Date and time collected
- Sample container and volume
- Test requested

The Laboratory will report the following information:

- All calculations
- Deviations, if applicable

Permeability Data Sheets will become part of the records if they are used.

9.0 ATTACHMENTS

A. ASTM STANDARD D2434-68. 1968. Standard Test Method for Permeability of Granular Soils (Constant Head).

UNCONTROLLED

ASTM STANDARD D2434-68
STANDARD TEST METHOD FOR PERMEABILITY OF GRANULAR SOILS (CONSTANT HEAD)

Designation: D 2434 – 68 (Reapproved 1974)$^{\epsilon 1}$

Standard Test Method for Permeability of Granular Soils (Constant Head)[1]

This standard is issued under the fixed designation D 2434; the number immediately following the designation indicates the year of original adoption or, in the case of revision, the year of last revision. A number in parentheses indicates the year of last reapproval. A superscript epsilon (ε) indicates an editorial change since the last revision or reapproval.

$^{\epsilon 1}$ NOTE—Section 2 was added editorially and subsequent sections renumbered in July 1984.

UNCONTROLLED

1. Scope

1.1 This test method covers the determination of the coefficient of permeability by a constant-head method for the laminar flow of water through granular soils. The procedure is to establish representative values of the coefficient of permeability of granular soils that may occur in natural deposits as placed in embankments, or when used as base courses under pavements. In order to limit consolidation influences during testing, this procedure is limited to disturbed granular soils containing not more than 10 % soil passing the 75-μm (No. 200) sieve.

2. Referenced Documents

2.1 *ASTM Standards:*
D 422 Method for Particle-Size Analysis of Soils[2]
D 2049 Test Method for Relative Density of Cohesionless Soils[3]

3. Fundamental Test Conditions

3.1 The following ideal test conditions are prerequisites for the laminar flow of water through granular soils under constant-head conditions:

3.1.1 Continuity of flow with no soil volume change during a test,

3.1.2 Flow with the soil voids saturated with water and no air bubbles in the soil voids,

3.1.3 Flow in the steady state with no changes in hydraulic gradient, and

3.1.4 Direct proportionality of velocity of flow with hydraulic gradients below certain values, at which turbulent flow starts.

3.2. All other types of flow involving partial saturation of soil voids, turbulent flow, and unsteady state of flow are transient in character and yield variable and time-dependent coefficients of permeability; therefore, they require special test conditions and procedures.

4. Apparatus

4.1 *Permeameters*, as shown in Fig. 1, shall have specimen cylinders with minimum diameters approximately 8 or 12 times the maximum particle size in accordance with Table 1. The permeameter should be fitted with: (*1*) a porous disk or suitable reinforced screen at the bottom with a permeability greater than that of the soil specimen, but with openings sufficiently small (not larger than 10 % finer size) to prevent movement of particles; (*2*) manometer outlets for measuring the loss of head, *h*, over a length, *l*, equivalent to at least the diameter of the cylinder; (*3*) a porous disk or suitable reinforced screen with a spring attached to the top, or any other device, for applying a light spring pressure of 22 to 45-N (5 to 10-lbf) total load, when the top plate is attached in place. This will hold the placement density and volume of soil without significant change during the saturation of the specimen and the permeability testing to satisfy the requirement prescribed in 3.1.1.

4.2 *Constant-Head Filter Tank*, as shown in Fig. 1, to supply water and to remove most of the air from tap water, fitted with suitable control valves to maintain conditions described in 3.1.2.

NOTE 1—De-aired water may be used if preferred.

4.3 *Large Funnels*, fitted with special cylindrical spouts 25 mm (1 in.) in diameter for 9.5-mm (⅜-in.) maximum size particles and 13 mm (½ in.) in diameter for 2.00-mm (No. 10) maximum size particles. The length of the spout should be greater than the full length of the permeability chamber—at least 150 mm (6 in.).

4.4 *Specimen Compaction Equipment*[2]—Compaction equipment as deemed desirable may be used. The following are suggested: a vibrating tamper fitted with a tamping foot 51 mm (2 in.) in diameter; a sliding tamper with a tamping foot 51 mm (2 in.) in diameter, and a rod for sliding weights of 100 g (0.25 lb) (for sands) to 1 kg (2.25 lb) (for soils with a large gravel content), having an adjustable height of drop to 102 mm (4 in.) for sands and 203 mm (8 in.) for soils with large gravel contents.

4.5 *Vacuum Pump or Water-Faucet Aspirator*, for evacuating and for saturating soil specimens under full vacuum (see Fig. 2).

4.6 *Manometer Tubes*, with metric scales for measuring head of water.

4.7 *Balance*, of 2-kg (4.4-lb) capacity, sensitive to 1 g (0.002 lb).

4.8 *Scoop*, with a capacity of about 100 g (0.25 lb) of soil.

4.9 *Miscellaneous Apparatus*—Thermometers, clock with sweep second hand, 250-mL graduate, quart jar, mixing pan, etc.

---

[1] This test method is under the jurisdiction of ASTM Committee D-18 on Soil and Rock and is the direct responsibility of Subcommittee D18.04 on Hydrologic Properties of Soil and Rocks.

Current edition approved Sept. 13, 1968. Originally issued 1965. Replaces D 2434 – 65 T.

[2] *Annual Book of ASTM Standards*, Vol 04.08.

[3] Discontinued—See *1983 Annual Book of ASTM Standards*, Vol 04.08.

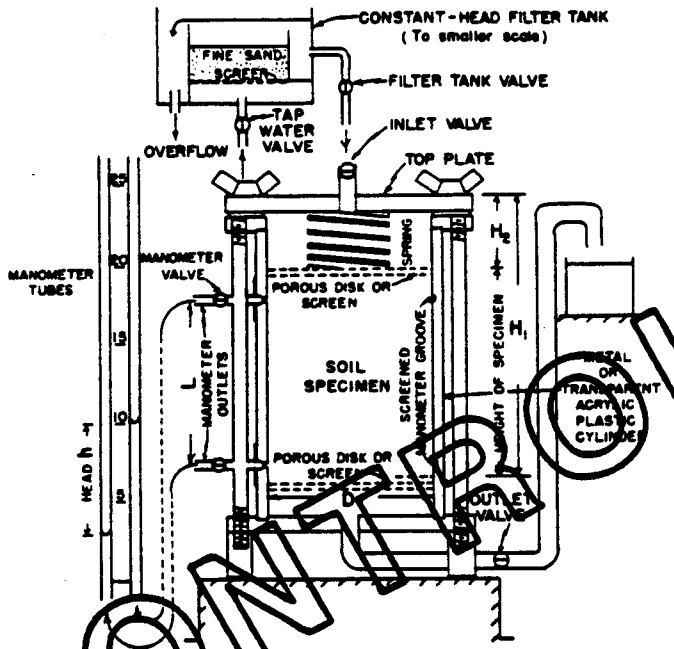

FIG. 1 Constant-Head Permeameter

UNCONTROLLED

5. Sample

5.1 A representative sample of air-dried granular soil, containing less than 10 % of the material passing the 75-µm (No. 200) sieve and equal to an amount sufficient to satisfy the requirements prescribed in 5.2 and 5.3, shall be selected by the method of quartering.

5.2 A sieve analysis (see Method D 422) shall be made on a representative sample of the complete soil prior to the permeability test. Any particles larger than 19 mm (¾ in.) shall be separated out by sieving (Method D 422). This oversize material shall not be used for the permeability test, but the percentage of the oversize material shall be recorded.

NOTE 2—In order to establish representative values of coefficients of permeabilities for the range that may exist in the situation being investigated, samples of the finer, average, and coarser soils should be obtained for testing.

5.3 From the material from which the oversize has been removed (see 5.2), select by the method of quartering, a sample for testing equal to an amount approximately twice that required for filling the permeameter chamber.

6. Preparation of Specimens

6.1 The size of permeameter to be used shall be as prescribed in Table 1.

6.2 Make the following initial measurements in centimetres or square centimetres and record on the data sheet (Fig. 3); the inside diameter, D, of the permeameter; the length, L, between manometer outlets; the depth, H_1, measured at four symmetrically spaced points from the upper surface of the top plate of the permeability cylinder to the top of the upper porous stone or screen temporarily placed on the lower porous plate or screen. This automatically deducts the thickness of the upper porous plate or screen from the height measurements used to determine the volume of soil placed in the permeability cylinder. Use a duplicate top plate containing four large symmetrically spaced openings through which the necessary measurements can be made to determine the average value for H_1. Calculate the cross-sectional area, A, of the specimen.

6.3 Take a small portion of the sample selected as prescribed in 5.3 for water content determinations. Record the weight of the remaining air-dried sample (see 5.3), W'_1,

TABLE 1 Cylinder Diameter

Maximum Particle Size Lies Between Sieve Openings	Minimum Cylinder Diameter			
	Less than 35 % of Total Soil Retained on Sieve Opening		More than 35 % of Total Soil Retained on Sieve Opening	
	2.00-mm (No. 10)	9.5-mm (⅜-in.)	2.00-mm (No. 10)	9.5-mm (⅜-in.)
2.00-mm (No. 10) and 9.5-mm (⅜ in.)	76 mm (3 in.)	...	114 mm (4.5 in.)	...
9.5-mm (⅜-in.) and 19.0-mm (¾ in.)	...	152 mm (6 in.)	...	229 mm (9 in.)

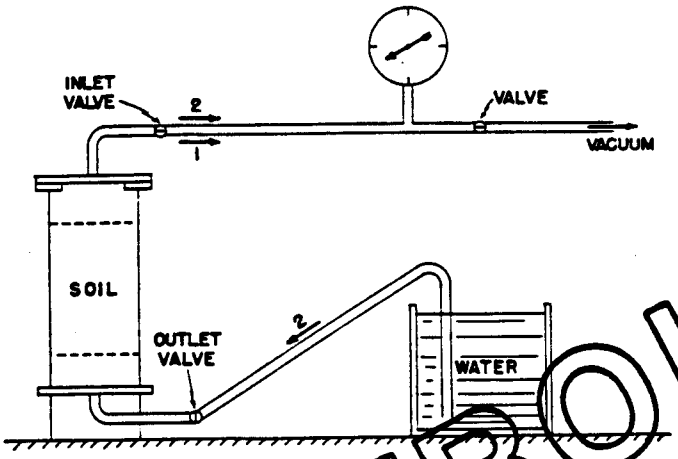

FIG. 2 Device for Evacuating and Saturating Specimen

UNCONTROLLED

for unit weight determinations.

6.4 Place the prepared soil by one of the following procedures in uniform thin layers approximately equal in thickness after compaction to the maximum size of particle but not less than approximately 15 mm (0.60 in.).

6.4.1 For soils having a maximum size of 9.5 mm (⅜ in.) or less, place the appropriate size of funnel, as prescribed in 4.3, in the permeability device with the spout in contact with the lower porous plate or screen, or previously formed layer, and fill the funnel with sufficient soil to form a layer, taking soil from different areas of the sample in the pan. Lift the funnel by 15 mm (0.60 in.), or approximately the unconsolidated layer thickness to be formed, and spread the soil with a slow spiral motion, working from the perimeter of the device toward the center, so that a uniform layer is formed. Remix the soil in the pan for each successive layer to reduce segregation caused by taking soil from the pan.

6.4.2 For soils with a maximum size greater than 9.5 mm (⅜ in.), spread the soil from a scoop. Uniform spreading can be obtained by sliding a scoopful of soil in a nearly horizontal position down along the inside surface of the device to the bottom or to the formed layer, then tilting the scoop and drawing it toward the center with a single slow motion; this allows the soil to run smoothly from the scoop in a windrow without segregation. Turn the permeability cylinder sufficiently for the next scoopful, thus progressing around the inside perimeter to form a uniform compacted layer of a thickness equal to the maximum particle size.

6.5 Compact successive layers of soil to the desired relative density by appropriate procedures, as follows, to a height of about 2 cm (0.8 in.) above the upper manometer outlet.

6.5.1 *Minimum Density (0 % Relative Density)*—Continue placing layers of soil in succession by one of the procedures described in 6.4.1 or 6.4.2 until the device is filled to the proper level.

6.5.2 *Maximum Density (100 % Relative Density)*:

6.5.2.1 *Compaction by Vibrating Tamper*—Compact each layer of soil thoroughly with the vibrating tamper, distributing the light tamping action uniformly over the surface of the layer in a regular pattern. The pressure of contact and the length of time of the vibrating action at each spot should not cause soil to escape from beneath the edges of the tamping foot, thus tending to loosen the layer. Make a sufficient number of coverages to produce maximum density, as evidenced by practically no visible motion of surface particles adjacent to the edges of the tamping foot.

6.5.2.2 *Compaction by Sliding Weight Tamper*—Compact each layer of soil thoroughly by tamping blows uniformly distributed over the surface of the layer. Adjust the height of drop and give sufficient coverages to produce maximum density, depending on the coarseness and gravel content of the soil.

6.5.2.3 *Compaction by Other Methods*—Compaction may be accomplished by other approved methods, such as by vibratory packer equipment, where care is taken to obtain a uniform specimen without segregation of particle sizes (see Test Method D 2049).

6.5.3 *Relative Density Intermediate Between 0 and 100 %*—By trial in a separate container of the same diameter as the permeability cylinder, adjust the compaction to obtain reproducible values of relative density. Compact the soil in the permeability cylinder by these procedures in thin layers to a height about 2.0 cm (0.80 in.) above the upper manometer outlet.

NOTE 3—In order to bracket, systematically and representatively, the relative density conditions that may govern in natural deposits or in compacted embankments, a series of permeability tests should be made to bracket the range of field relative densities.

6.6 *Preparation of Specimen for Permeability Test:*

6.6.1 Level the upper surface of the soil by placing the upper porous plate or screen in position and by rotating it gently back and forth.

6.6.2 Measure and record: the final height of specimen, $H_1 - H_2$, by measuring the depth, H_2, from the upper surface of the perforated top plate employed to measure H_1 to the top of the upper porous plate or screen at four symmetrically spaced points after compressing the spring lightly to seat the porous plate or screen during the measurements; the final weight of air-dried soil used in the test ($W_1 - W_2$) by

UNCONTROLLED

D 2434

PERMEABILITY TEST ON GRANULAR SOIL

Test No. Date of Test
Location of Sample Date Sampled Report
Boring— Sample— Depth—

(a) DESCRIPTION OF SOIL _____

MATERIALS USED: _____

(b) UNIT WEIGHT DETERMINATION:

Diameter, D, cm
Area, A, cm^2
Length, L, cm

Height Before, H_1
Height After, H_2
Height Net, cm

Weight Before, W_1
Weight After, W_2
Weight Net, g

Moisture Content (air-dried) _____
Dry Unit Weight, lb/ft^3 W _____
Void Ratio, e _____
Relative Density, RD _____

W (max)
W (min)

(c) PERMEABILITY TEST (DEGREE OF COMPACTNESS)

Test No.	Manometers		Head, h cm	Q cm^3	t s	Q/At	h/L	Temperature, °C	k cm/s
	H_1	H_2							
1									
2									
3									
4									
5									
6									

FIG. 3 Permeability Test Data Sheet

weighing the remainder of soil, W_2, left in the pan. Compute and record the unit weights, void ratio, and relative density of the test specimen.

6.6.3 With its gasket in place, press down the top plate against the spring and attach it securely to the top of the permeameter cylinder, making an air-tight seal. This satisfies the condition described in 3.1.1 of holding the initial density without significant volume change during the test.

6.6.4 Using a vacuum pump or suitable aspirator, evacuate the specimen under 50 cm (20 in.) Hg minimum for 15 min to remove air adhering to soil particles and from the voids. Follow the evacuation by a slow saturation of the specimen from the bottom upward (Fig. 2) under full vacuum in order to free any remaining air in the specimen. Continued saturation of the specimen can be maintained more adequately by the use of (*1*) de-aired water, or (*2*) water maintained in an in-flow temperature sufficiently high to cause a decreasing temperature gradient in the specimen during the test. Native water or water of low mineral content (Note 4) should be used for the test, but in any case the fluid should be described on the report form (Fig. 3). This satisfies the condition described in 3.1.2 for saturation of soil voids.

NOTE 4—Native water is the water occurring in the rock or soil *in situ*. It should be used if possible, but it (as well as de-aired water) may be a refinement not ordinarily feasible for large-scale production testing.

6.6.5 After the specimen has been saturated and the permeameter is full of water, close the bottom valve on the outlet tube (Fig. 2) and disconnect the vacuum. Care should be taken to ensure that the permeability flow system and the manometer system are free of air and are working satisfactorily. Fill the inlet tube with water from the constant-head tank by slightly opening the filter tank valve. Then connect the inlet tube to the top of the permeameter, open the inlet valve slightly and open the manometer outlet cocks slightly, to allow water to flow, thus freeing them of air. Connect the water manometer tubes to the manometer outlets and fill with water to remove the air. Close the inlet valve and open

the outlet valve to allow the water in the manometer tubes to reach their stable water level under zero head.

7. Procedure

7.1 Open the inlet valve from the filter tank slightly for the first run to conditions described in 3.1.3, delay measurements of quantity of flow and heat until a stable head condition without appreciable drift in water manometer levels is attained. Measure and record the time, t, head, h (the difference in level in the manometers), quantity of flow, Q, and water temperature, T.

7.2 Repeat test runs at heads increasing by 0.5 cm in order to establish accurately the region of laminar flow with velocity, v (where $v = Q/At$), directly proportional to hydraulic gradient, i (where $i = h/L$). When departures from the linear relation become apparent, indicating the initiation of turbulent flow conditions, 1-cm intervals of head may be used to carry the test run sufficiently along in the region of turbulent flow to define this region if it is significant for field conditions.

NOTE 5—Much lower values of hydraulic gradient, h/L, are required than generally recognized, in order to ensure laminar flow conditions. The following values are suggested: loose compactness ratings, h/L from 0.2 to 0.3, and dense compactness ratings, h/L from 0.3 to 0.5, the lower values of h/L applying to coarser soils and the higher values to finer soils.

7.3 At the completion of the permeability test, drain the specimen and inspect it to establish whether it was essentially homogeneous and isotropic in character. Any light and dark alternating horizontal streaks or layers are evidence of segregation of fines.

8. Calculations

8.1 Calculate the coefficient of permeability, k, as follows:

$$k = QL/Ath$$

where:

k = coefficient of permeability,
Q = quantity of water discharged,
L = distance between manometers,
A = cross-sectional area of specimen,
t = total time of discharge,
h = difference in head on manometers.

8.2 Correct the permeability to that for 20°C (68°F) by multiplying k (see 8.1) by the ratio of the viscosity of water at test temperature to the viscosity of water at 20°C (68°F).

9. Report

9.1 The report of permeability test shall include the following information:

9.1.1 Project, dates, sample number, location, depth, and any other pertinent information,

9.1.2 Grain size analysis, classification, maximum particle size, and percentage of any oversize material not used,

9.1.3 Dry unit weight, void ratio, relative density as placed, and maximum and minimum densities,

9.1.4 A statement of any departures from these test conditions, so the results can be evaluated and used,

9.1.5 Complete test data, as indicated in the laboratory form for test data (see Fig. 3), and

9.1.6 Test curves plotting velocity, Q/At, versus hydraulic gradient, h/L, covering the ranges of soil identifications and of relative densities.

UNCONTROLLED

The American Society for Testing and Materials takes no position respecting the validity of any patent rights asserted in connection with any item mentioned in this standard. Users of this standard are expressly advised that determination of the validity of any such patent rights, and the risk of infringement of such rights, are entirely their own responsibility.

This standard is subject to revision at any time by the responsible technical committee and must be reviewed every five years and if not revised, either reapproved or withdrawn. Your comments are invited either for revision of this standard or for additional standards and should be addressed to ASTM Headquarters. Your comments will receive careful consideration at a meeting of the responsible technical committee, which you may attend. If you feel that your comments have not received a fair hearing you should make your views known to the ASTM Committee on Standards, 1916 Race St., Philadelphia, PA 19103.

Los Alamos National Laboratory **Environmental Restoration Program** Standard Operating Procedure	No: LANL-ER-SOP-11.04 Rev: 0

Soil and Core pH

UNCONTROLLED

	(Print Name)	(Signature)	(Date)
Preparer:	Sandra E Wagner	Sandra E. Wagner	11-26-91
Quality Review by:	Terry Morgan	Terry Morgan	12/13/91
Technical Review by:	Clarence J Duffy	Clarence J Duffy	12/13/91
QPPL Approval:	Karen L Werthen	Karen L Werthen	3/4/92
PM Approval:	Robert W Vocke	Robert W Vocke	3-4-92

Effective Date: 3.16.92

SOIL AND CORE pH

1.0 PURPOSE

This procedure describes the methods by which the pH of a soil is measured. This procedure can be used to determine the degree of acidity or alkalinity in soil materials which are suspended in water and a 0.01M calcium chloride solution, and it can be used to supplement soil-resistivity measurements and identify conditions under which the corrosion of metals in the soil may be sharply accentuated.

2.0 SCOPE

2.1 Applicability

This procedure is applicable for determining the soil pH when collecting or working with soil samples for the Environmental Restoration program.

2.2 Training

Field team members using this procedure must document that they have read and understand this procedure and the procedures in Section 1.0, General Instructions.

UNCONTROLLED

3.0 DEFINITIONS

There are no unique definitions in this procedure.

4.0 BACKGROUND AND/OR CAUTIONS

Refer to the attached ASTMs, and to the Site Health and Safety plan for hazards and/or cautions.

5.0 EQUIPMENT

Refer to the attached ASTMs.

6.0 PROCEDURE

Refer to the attached ASTMs.

The use of commercially available pH buffers and deionized water is acceptable in the procedures. Follow the manufacturer's instructions for calibration of the pH meters.

7.0 REFERENCES

The following procedures are directly associated with this procedure and should be reviewed prior to field operations:

ASTM STANDARD D4972-89. 1989. Standard Test Method for pH of Soils.

ASTM STANDARD D2976-71. 1971. Standard Test Method for pH of Peat Materials.

ASTM STANDARD G51-77. 1977. Standard Test Method for pH of Soils for Use in Corrosion Testing.

LANL-ER-SOPs in Section 1.0, General Instructions.

8.0 RECORDS

A Chain-of-Custody/Request for Analysis form (SOP-01.04) will be maintained and will document the following information:

- Field Sample Number
- Date and time collected
- Sample container volume and material
- Matrix (soil, sludge, sediment)
- Test method
- Solution the pH datum was taken from

The laboratory will report:

- pH datum recorded to the first decimal
- Lot and expiration date of calibration solutions used
- Calibration records
- Soil size fractions taken from other than the No. 10 sieve.

9.0 ATTACHMENTS

A. ASTM STANDARD D4972-89. 1989. Standard Test Method for pH of Soils.

B ASTM STANDARD D2976-71. 1971. Standard Test Method for pH of Peat Materials.

C. ASTM STANDARD G51-77. 1977. Standard Test Method for pH of Soils for Use in Corrosion Testing.

UNCONTROLLED

ASTM STANDARD D4972-89, STANDARD TEST METHOD FOR pH OF SOILS

Designation: D 4972 - 89

Standard Test Method for pH of Soils[1]

This standard is issued under the fixed designation D 4972, the number immediately following the designation indicates the year of original adoption or, in the case of revision, the year of last revision. A number in parentheses indicates the year of last reapproval. A superscript epsilon (ε) indicates an editorial change since the last revision or reapproval.

UNCONTROLLED

1. Scope

1.1 This test method covers the measurement of the pH of soils for uses other than for corrosion testing. Such measurements are used in the agricultural, environmental, and the natural resources fields. This measurement determines the degree of acidity or alkalinity in soil materials suspended in water and a 0.01 *M* calcium chloride solution. Measurement in both liquids are necessary to fully define the soil's pH. This variable is useful in determining the solubility of soil minerals, the mobility of ions in the soil, and assessing the viability of the soil-plant environment. A more detailed discussion of the usefulness of this parameter is not warranted here, however, it can be found in many discussions of the subject. A few such discussions are given as Refs (1)[2] through (6) at the end of the text.

1.2 The values given in SI units are regarded as standard.

1.3 *This standard may involve hazardous materials, operations, and equipment. This standard does not purport to address all of the safety problems associated with its use. It is the responsibility of the user of this standard to establish appropriate safety and health practices and determine the applicability of regulatory limitations prior to use.*

2. Referenced Documents

2.1 *ASTM Standards:*

C 670 Practice for Preparing Precision and Bias Statements for Test Methods of Construction Materials[3]

G 51 Test Method for pH of Soil for Use in Corrosion Testing[4]

3. Summary of Test Method

3.1 Measurement of the pH of soils in both suspensions of water and a calcium chloride solution are made with either a potentiometer using a pH sensitive electrode system (Method A), or pH sensitive paper (Method B). The potentiometer is calibrated with buffer solutions of known pH. The pH sensitive paper is a less accurate measurement and should only be used for a rough estimate of the soil pH. The electrode must be used for this measurement unless the pH sensitive paper is specified.

4. Significance and Use

4.1 The pH of the soil is a useful variable in determining the solubility of soil minerals, the mobility of ions in the soil, and assessing the viability of the soil-plant environment.

4.2 pH measurements are made in both water and a calcium chloride solution, because the calcium displaces some of the exchangeable aluminum. The low ionic strength counters the dilution effect on the exchange equilibrium by setting the salt concentration of the solution closer to that expected in the soil solution. The pH values obtained in the solution of calcium chloride are slightly lower than those measured in water due to the release of more aluminum ions which then hydrolyses. Therefore, both measurements are required to fully define the character of the soil's pH.

4.3 For the purpose of this test method the test soil must be sieved through a No. 10 sieve (2 mm sieve mesh openings). Measurements on soils or soil fractions having particle sizes larger than 2 mm by this test method may be invalid. If soil or soil fractions with particles larger than 2 mm are used, it must be stated in the report since the results may be significantly different.

4.4 All water used for this test method must be distilled and deionized.

5. Interferences

5.1 This test method as measured by a pH probe has possible interferences due to a suspension effect or sedimentation potential. Users interested in a detailed discussion of the mechanism of this effect can find it in Refs (5) and (6).

5.2 This effect is the main reason Test Method G 51 can not be used for general measurement of pH outside of that for corrosion analysis. Test Method G 51 measures pH (an aqueous parameter) without adding any aqueous phase to the soil. This results in excessive soil particle-pH probe contact that over-estimates the activity of the hydrogen ions in solution and is therefore unacceptable for general soil analysis.

5.3 The suspension effect can be mitigated by careful attention to 9.1.

6. Apparatus

6.1 *Method A, pH Meter*—Potentiometer equipped with glass-calomel electrode system. Follow the manufacturer's instructions for the pH meter used. A silver/silver chloride electrode system or similar is also acceptable.

6.2 *Method B, pH Paper*—pH paper sensitive to a pH range from 1 to 12, with resolution to the nearest 0.2 pH unit.

7. Reagents

7.1 *Purity of Reagents*—Reagent grade chemicals should be used in all tests. Unless otherwise indicated, it is intended that all reagents should conform to the specifications of the

---

[1] This test method is under the jurisdiction of ASTM Committee D-18 on Soil and Rock and is the direct responsibility of Subcommittee D18.06 on Physico-Chemical Properties of Soils and Rocks.

Current edition approved Nov. 10, 1989. Published December 1989.

[2] The boldface numbers in parentheses refer to a list of references at the end of the test method.

[3] *Annual Book of ASTM Standards*, Vols 04.01, 04.02, 04.03, and 04.08.

[4] *Annual Book of ASTM Standards*, Vol 03.02.

Committee on Analytical Reagents of the American Chemical Society, where such specifications are available.[5] Other grades may be used, provided it is first ascertained that the reagent is of sufficient purity to permit its use without lessening the accuracy of the determination.

7.2 *Purity of Water*—Water should be distilled, deionized water, but not necessarily free of carbon dioxide. The pH of the water should be checked prior to testing the soil. Should it fall outside the range of 6.5 to 7.5, it should be discarded and other water obtained for the test.

7.3 *Acid Potassium Phthalate Buffer Solution* (0.05 *M*)—Dissolve 10.21 g (dried 1 h at 105°C) of potassium phthalate in water and dilute to 1 L. The pH of this solution should be 4.0 at 20°C. Protect the solution against evaporation and against contamination with molds. Replace the solution when mold is noticed. The effect of temperature is:

°C	pH
5 to 37	4.0

This illustrates that the pH of the solution does not change over the range in temperature from 5 to 37°C.

7.4 *Calcium Chloride Stock Solution* (1.0 *M*)—Dissolve 147 g of $CaCl_2 \cdot 2H_2O$ in water in a 1-L volumetric flask, cool, dilute to volume with water, and mix. Dilute 15 mL of this solution to 200 mL with water in a volumetric flask.

7.5 *Calcium Chloride Solution* (0.01 *M*)—Dilute 20.0 mL of stock 1.0 *M* $CaCl_2$ solution to 2 L with water. The pH of this solution should be between 5 and 7.

7.6 *Phosphate Buffer Solution* (0.025 *M*)—Dissolve 3.40 g of KH_2PO_4 and 3.55 g of Na_2HPO_4 in water and dilute to 1 L. Dry salts 2 h at 130°C before use. The pH of this solution should be 6.9 at 20°C. The effect of temperature is as follows:

°C	pH
0	7.0
10	6.9
20	6.9
30	6.8
40	6.8

8. Calibration of pH Meter

8.1 Calibrate the pH meter using the acid potassium phthalate and phosphate buffer solutions. Adjustment of the pH meter should follow the manufacturers direction.

9. Procedure

9.1 When making measurements with the pH electrode, place the electrode into the partially settled suspension to mitigate the suspension effect.

9.2 For both methods, begin with an air dried soil that has been sieved through a No. 10 sieve (2 mm holes) to remove the coarser soil fraction. Air drying the soil is necessary to accomplish sieving and to control the amount of water present at the time of measurement.

9.3 *pH in Distilled Water*—For both methods, weigh out approximately 10 g of air dried soil. Place the soil into a glass container and add approximately 10 mL of distilled water. Mix thoroughly and let stand for 1 h.

9.4 *Method A*—Read pH on pH meter.

9.5 *Method B*—Read pH on pH paper.

9.6 *pH in 0.01 M Calcium Chloride Solution*—For both methods weigh out approximately 10 g of air dried soil. Place the soil into a glass container and add approximately 10 mL of the 0.01 *M* $CaCl_2$ solution. Mix thoroughly and let stand for 1 h.

9.7 *Method A*—Read pH on pH meter.

9.8 *Method B*—Read pH on pH paper.

9.9 The mixture should be at approximately room temperature (15 to 25°C) at the time of pH measurement.

10. Report

10.1 Report the pH of the soil to the first decimal place. Specify which of the pH measurements is in water and which is in the calcium chloride solution. Also specify whether the determinations were made with Method A or Method B. If size fractions other than sieved through the No. 10 sieve are used, it must be stated in the report since the results may be significantly different.

11. Precision and Bias

11.1 *Precision:*

11.1.1 *Within-Laboratory Precision*—The within laboratory standard deviations for Method A are 0.031 (pH units) for the water mixture and 0.139[6] (pH units) for the calcium chloride mixture. Therefore, results of two properly conducted tests in the same or different laboratories should not differ by more than 0.065[6] (pH units) for the water mixture and 0.389 pH units for the calcium chloride mixture. The within-laboratory standard deviations for Method B are 0.189 (pH units) for the water mixture and 0.212[6] (pH units) for the calcium chloride mixture. Therefore, results of two properly conducted tests in the same or different laboratories should not differ by more than 0.53[6] (pH units) for the water mixture and 0.60 pH units for the calcium chloride mixture.

11.1.1.1 The precision of Method A presented was determined by the National Technical Center of the United States Department of Agriculture. In their evaluation they used 174 replicates for the water mixture and 32 replicates in testing the calcium chloride mixture.

11.1.1.2 The precision of Method B presented was determined by the United States Army Environmental Hygiene Agency. In their evaluation they used 25 replicates in testing each mixture.

11.1.2 *Between-Laboratory Precision*—The between-laboratory standard deviation has not been determined for either method. Subcommittee D18.06 is actively seeking data to evaluate the between laboratory precision of this test method.

11.2 *Bias*—There is no accepted reference value for this test method; therefore, bias cannot be determined.

12. Keywords

12.1 soil; pH; acidity; alkalinity; reaction

[5] "Reagent Chemicals, American Chemical Society Specifications." Am. Chemical Soc., Washington, DC. For suggestions on the testing of reagents not listed by the American Chemical Society, see "Reagent Chemicals and Standards, by Joseph Rosin, D. Van Nostrand Co., Inc., New York, NY, and the United States Pharmacopeia.

[6] These data satisfy the 1S and D2S requirements outlined in Practice C 670.

UNCONTROLLED

REFERENCES

(1) Garrels, R. M., and Christ, C. L., *Solutions, Minerals, and Equilibria*," Freeman Cooper, San Francisco, CA, 1965.
(2) Greenland, D. J., and Hayes, M. H. B., *The Chemistry of Soil Processes*, Wiley, NY, 1981.
(3) Sposito, G., *The Thermodynamics of Soil Solutions*, Clarendon, Oxford, 1981.
(4) Davies, J. T., and Rideal, E. K., *Interfacial Phenomena*, Academic, NY, 1963.
(5) Hunter, R. J., *Zeta Potential in Colloid Science*, Academic, NY, 1981.
(6) Perrin, D. D., and Dempsey, B., *Buffers for pH and Metal Ion Control*, Chapman and Hall, London, 1974.

The American Society for Testing and Materials takes no position respecting the validity of any patent rights asserted in connection with any item mentioned in this standard. Users of this standard are expressly advised that determination of the validity of any such patent rights, and the risk of infringement of such rights, are entirely their own responsibility.

This standard is subject to revision at any time by the responsible technical committee and must be reviewed every five years and if not revised, either reapproved or withdrawn. Your comments are invited either for revision of this standard or for additional standards and should be addressed to ASTM Headquarters. Your comments will receive careful consideration at a meeting of the responsible technical committee, which you may attend. If you feel that your comments have not received a fair hearing you should make your views known to the ASTM Committee on Standards, 1916 Race St., Philadelphia, PA 19103.

UNCONTROLLED

ASTM STANDARD D2976-71, STANDARD TEST METHOD FOR pH OF PEAT MATERIALS

Designation: D 2976 – 71 (Reapproved 1981)$^{\epsilon 1}$

Standard Test Method for pH of Peat Materials[1]

This standard is issued under the fixed designation D 2976; the number immediately following the designation indicates the year of original adoption or, in the case of revision, the year of last revision. A number in parentheses indicates the year of last reapproval. A superscript epsilon (ε) indicates an editorial change since the last revision or reapproval.

$^{\epsilon 1}$ NOTE—Footnote 2 and Section 9 were added editorially in May 1981.

UNCONTROLLED

1. Scope

1.1 This method[2] covers the electrometric measurement of the pH of peat materials. It is a means of expressing the degree of acidity or alkalinity of peat material suspended in water and 0.01 *M* calcium chloride solution.

2. Summary of Method

2.1 The electrometric measurement of the pH of peat in suspensions of water and calcium chloride solutions is made with a potentiometer using a glass-calomel electrode system, calibrated with buffers of known pH.

3. Significance

3.1 pH measurements are made in water and in calcium chloride solution because the pH readings in water can be modified by salts such as fertilizer material whereas the observed pH in calcium chloride solution is virtually independent of the initial amount of salts present in the soil. pH values obtained in calcium chloride solution usually run about 0.5 to 0.8 pH unit lower than measurements in water due to release of more hydrogen ions by cation exchange.

4. Apparatus

4.1 *pH Meter*—Potentiometer equipped with glass-calomel electrode system. Follow the manufacturer's instructions for the pH meter used.

5. Reagents

5.1 *Purity of Reagents*—Reagent grade chemicals shall be used in all tests. Unless otherwise indicated, it is intended that all reagents shall conform to the specifications of the Committee on Analytical Reagents of the American Chemical Society, where such specifications are available.[3] Other grades may be used, provided it is first ascertained that the reagent is of sufficiently high purity to permit its use without lessening the accuracy of the determination.

5.2 *Purity of Water*—Water shall be carbon-dioxide-free distilled water. Use water with a pH of not less than 6.5 nor more than 7.5 obtained by boiling distilled water 15 min and cooling under carbon dioxide-free conditions.

5.3 *Acid Potassium Phthalate Buffer Solution* (0.05 *M*)—Dissolve 10.21 g (dried 1 h at 105°C) of potassium phthalate (NBS Standard Samples) in water and dilute to 1 L. Protect the solution against evaporation and contamination with molds. Replace the solution when mold is apparent. The effect of temperature is as follows:

°C	pH
5 to 24	4.00
25 to 33	4.01
34 to 37	4.02

5.4 *Calcium Chloride, Stock Solution* (1.0 *M*)—Dissolve 147 g of $CaCl_2 \cdot 2H_2O$ in distilled water in a 1-L volumetric flask, cool, dilute to volume with distilled water, and mix. Dilute 15 mL of this solution to 200 mL with distilled water in a volumetric flask, and standardize by titrating a 25-mL aliquot of the diluted solution with standard 0.1 *N* silver nitrate ($AgNO_3$) solution using 1 mL of 5 % potassium chromate (K_2CrO_4) solution as the indicator.

5.5 *Calcium Chloride Solution* (0.01 *M*)—Dilute 20.0 mL of stock 1.0 *M* $CaCl_2$ solution to 2 L with distilled water. The pH of this solution should be between 5 and 6.5.

5.6 *Phosphate Buffer Solution* (0.025 *M*)—Dissolve 3.40 g of KH_2PO_4 and 3.55 g of Na_2HPO_4 (NBS Standard Samples 186-I and II) in water and dilute to 1 L. Dry salts 2 h at 130°C before use. Effect of temperature on pH is:

°C	pH
0	6.98
10	6.92
20	6.88
30	6.85
40	6.83

6. Calibration of pH Meter

6.1 Calibrate the pH meter using the acid potassium phthalate and phosphate buffer solutions.

7. Procedure

7.1 *pH in Distilled Water*—Weigh out about 3 g of air-dried peat or about the equivalent amount of moist material. Place into a 100-mL beaker. Add 50 mL of distilled water. Additional water may be needed for very fibrous materials such as sphagnum moss peat. Let soak with occasional stirring for 30 min. Read on pH meter.

7.2 *pH in 0.01 M $CaCl_2$ Solution*—Weigh out about 3.0 g of air-dried peat or the equivalent amount of moist material. Place into a 100-mL beaker. Add 50 mL of 0.01 *M* $CaCl_2$

[1] This method is under the jurisdiction of ASTM Committee D-18 on Soil and Rock.

Effective Sept. 20, 1971.

[2] This method is currently undergoing an extensive review by ASTM Committee D-18 and additional alternative methods will be proposed.

[3] "Reagent Chemicals, American Chemical Society Specifications." Am. Chemical Soc., Washington, D.C. For suggestions on the testing of reagents not listed by the American Chemical Society, see "Reagent Chemicals and Standards," by Joseph Rosin, D. Van Nostrand Co., Inc., New York, N.Y., and the "United States Pharmacopeia."

solution. Let soak with an occasional stirring for 30 min. Read on pH meter.

8. Report

8.1 Report the pH of the peat to the first decimal place (0.1) and specify whether it is pH in distilled water or pH in calcium chloride solution.

9. Precision and Accuracy

9.1 The precision of this method has not yet been determined. Data are being sought that will be suitable for use in developing precision statements.

The American Society for Testing and Materials takes no position respecting the validity of any patent rights asserted in connection with any item mentioned in this standard. Users of this standard are expressly advised that determination of the validity of any such patent rights, and the risk of infringement of such rights, are entirely their own responsibility.

This standard is subject to revision at any time by the responsible technical committee and must be reviewed every five years and if not revised, either reapproved or withdrawn. Your comments are invited either for revision of this standard or for additional standards and should be addressed to ASTM Headquarters. Your comments will receive careful consideration at a meeting of the responsible technical committee, which you may attend. If you feel that your comments have not received a fair hearing you should make your views known to the ASTM Committee on Standards, 1916 Race St., Philadelphia, PA 19103.

UNCONTROLLED

ASTM STANDARD G51-77, STANDARD TEST METHOD FOR pH OF SOILS FOR USE IN CORROSION TESTING

Designation: G 51 - 77 (Reapproved 1984)

Standard Test Method for pH of Soil for Use in Corrosion Testing[1]

This standard is issued under the fixed designation G 51; the number immediately following the designation indicates the year of original adoption or, in the case of revision, the year of last revision. A number in parentheses indicates the year of last reapproval. A superscript epsilon (ε) indicates an editorial change since the last revision or reapproval.

UNCONTROLLED

1. Scope

1.1 This method covers the determination of soil pH. The principal use of the test is to supplement soil-resistivity measurements and thereby identify conditions under which the corrosion of metals in the soil may be sharply accentuated.

1.2 *This standard may involve hazardous materials, operations, and equipment. This standard does not purport to address all of the safety problems associated with its use. It is the responsibility of whoever uses this standard to consult and establish appropriate safety and health practices and determine the applicability of regulatory limitations prior to use.*

2. Apparatus

2.1 *pH Meters*—There are two types of meters: (*1*) potentiometric, which has a null indication, and (*2*) high-impedance amplifier type, which gives the pH directly (without null indication). Either meter is available as a portable, battery powered unit so that it can be used in the field. The potentiometric meter is more accurate and generally more versatile.

2.2 *Calomel and Glass Electrodes*:

2.2.1 A saturated calomel reference electrode or its equivalent shall be used in the pH determination. A few crystals of solid potassium chloride should always be present within the chamber surrounding the calomel to assure that the solution is saturated under the conditions of use. The design of the electrode shall permit the formation of a fresh liquid junction between the solution of potassium chloride and the buffer or test soil for each test and shall allow traces of soil to be readily removed by washing.

2.2.2 A glass electrode of rugged construction is required. The pH response of the glass electrode shall be judged to be performing satisfactorily if it furnishes the correct pH value (±0.1 pH unit) for standard buffer solutions.

NOTE 1—These standards can be purchased from chemical supply companies or pH equipment manufacturers in tablet or powder form such that when added to a measured amount of distilled water, the desired standard buffer solution is obtained.

2.2.3 A combination electrode consisting of a saturated calomel reference electrode and a glass electrode (items 2.2.1 and 2.2.2) combined as a single electrode is acceptable. However, the requirements outlined above are equally applicable to the electrodes used in this combination unit.

2.3 *Subsurface Probe*—When pH measurements below the surface of the soil are required, it is necessary to use a probe of suitable length which will allow measurements to be made at the depth of interest. This probe consists of a glass electrode or a combination electrode in a rubber housing at the end of a plastic tube. One type of probe is illustrated in Fig. 1.

3. Procedure

3.1 *Test of Apparatus*—Prior to field use, or periodically when used extensively in the field, test the apparatus for linearity of response. This procedure is as follows:

3.1.1 Turn on the instrument, allow to warm up thoroughly, and bring to electrical balance in accordance with the manufacturer's instructions. Before use, clean and rinse the glass and calomel electrodes in distilled water.

NOTE 2—New glass electrodes and those that have been stored dry shall be conditioned in accordance with the manufacturer's recommendations before use.

3.1.2 At least two standard buffered pH solutions that span the soil pH to be measured are required. From practical experience standard solutions of pH 4, 7, and 8 are recommended. For the test, the temperature of these solutions shall not differ from each other by more than 5°C.

3.1.3 Adjust the temperature compensating dial on the pH meter to the standard solution temperature.

3.1.4 Immerse the electrodes in a small volume of the first known standard solution. Now adjust the meter to read this known pH by use of the "standardize" dial.

3.1.5 Remove the electrodes from the first standard solution, and rinse in distilled water. Immerse the electrodes in the second known standard solution. Judge the system to be operating satisfactorily if the reading obtained for the second standard agrees within 0.1 unit of the assigned pH.

3.2 *Standardization of pH Meter*—Standardize the pH meter immediately before use. If a series of measurements are to be made, supplement initial standardization by a check at intervals of about 30 min. Perform the meter standardization as follows:

3.2.1 Use a standard solution in the range of the pH of the soil to be tested, if such information is known beforehand. Otherwise, begin with a standard solution having a pH of 7. Stabilize the temperature of the solution so that it matches the temperature of the soil to within 10°C.

3.2.2 Immerse the electrodes in the known standard solution and adjust the meter to read this known pH, using the "standardize" dial.

3.3 *Soil Preparation for pH Determination*:

3.3.1 Ideally the pH measurement should be made in the field on undisturbed soil with the glass electrode contacting the soil at the specific depth of interest. If the surface soil pH

[1] This test method is under the jurisdiction of ASTM Committee G-1 on Corrosion of Metals, and is the direct responsibility of Subcommittee G01.10 on Corrosion in Soils.

Current edition approved Jan. 24, 1977. Published May 1977.

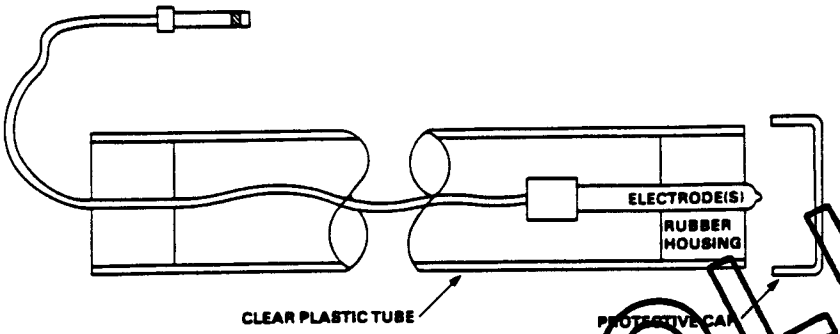

FIG. 1 Subsurface Probe

is desired, then the soil can be broken up if compacted so as to accept the electrodes. If a subsurface pH is desired, then a boring or an excavation must be done so that the electrode can be placed in the soil at the desired depth. The subsurface probe (Fig. 1) is ideal for use with a boring tool such as a hand auger. After the boring is done, carefully lower the probe into the cavity without further preparation of the soil.

3.3.2 Soil samples can be brought to the surface with a boring tool or a post-hole digger, and the measurement made in the field on the soil thus obtained. This technique is less desirable than the probe method described above.

3.3.3 The least desirable pH measurement of soil is that which is based on a soil sample transported to a laboratory for evaluation. However, if this must be done, then make the pH measurement as quickly as possible after the soil is taken from the field. Place the sample in a clean, airtight, glass container or plastic bag so that the soil is not in contact with any metal. If the pH measurement is not made within 24 h from the time the soil sample is taken, then it is recommended that the soil sample be packed in dry ice to retard any change in pH due to chemical or biological reactions. Make the pH measurement on the soil at room temperature and as received.

3.3.3.1 The addition of water to the soil is not recommended for any case because some soils are so poorly buffered that added moisture will change their pH. However, if a soil is extremely dry with a resistivity exceeding 10^6 ohm, a condition not likely to be encountered, then the pH measurement can not and should not be made. This situation will manifest itself with a random drifting of the pH meter reading.

3.4 *Determination of pH of Soil:*

3.4.1 Complete the meter standardization procedure (3.2). The soil temperature shall match the temperature of the standardizing solution within 10°C. However, maintain the temperature compensating dial on the meter at the setting used for standardization.

3.4.2 Clean the electrode surface by washing with distilled water.

3.4.3 Press the contact area of the glass electrode or combination electrode, as the case may be, *against undisturbed soil* at the location of interest.

3.4.4 The reference electrode should be placed in contact with the soil near the glass electrode (this step is not required when using a combination-type electrode). An electrode separation of about 300 mm (1 ft) is suggested for surface measurements. For subsurface readings, the reference electrode may be placed on the surface about 300 mm from the bore hole entry.

3.4.5 With the electrode(s) in place, set the meter to read pH, allow a few minutes for equilibrium to be established, then take the meter reading.

3.4.6 After several minutes, repeat the meter reading. The values obtained should agree within 0.2 unit to be acceptable.

The American Society for Testing and Materials takes no position respecting the validity of any patent rights asserted in connection with any item mentioned in this standard. Users of this standard are expressly advised that determination of the validity of any such patent rights, and the risk of infringement of such rights, are entirely their own responsibility.

This standard is subject to revision at any time by the responsible technical committee and must be reviewed every five years and if not revised, either reapproved or withdrawn. Your comments are invited either for revision of this standard or for additional standards and should be addressed to ASTM Headquarters. Your comments will receive careful consideration at a meeting of the responsible technical committee, which you may attend. If you feel that your comments have not received a fair hearing you should make your views known to the ASTM Committee on Standards, 1916 Race St., Philadelphia, PA 19103.

UNCONTROLLED

Los Alamos National Laboratory **Environmental Restoration Program** Standard Operating Procedure	No: LANL-ER-SOP-11.05 Rev: 0

Total Organic Carbon

UNCONTROLLED

Preparer:	Sandra Wagner (Print Name)	Sandra Wagner (Signature)	11-26-91 (Date)
Quality Review by:	Terry Morgan (Print Name)	Terry Morgan (Signature)	12/13/91 (Date)
Technical Review by:	Clarence J. Duffy (Print Name)	Clarence J. Duffy (Signature)	12/19/91 (Date)
QPPL Approval:	Karen L. Warthen (Print Name)	Karen L Warthen (Signature)	3/4/92 (Date)
PM Approval:	Robert W Vocke (Print Name)	Robert W Vocke (Signature)	3-4-92 (Date)

Effective Date: 3.16.92

TOTAL ORGANIC CARBON

1.0 PURPOSE

This procedure describes the method of determining the ash content and the total organic carbon of soil samples by air drying, heating within an oven or furnace, or a combination thereof.

2.0 SCOPE

2.1 Applicability

This procedure is applicable to all personnel determining total organic content for the Environmental Restoration program.

2.2 Training

Field team members using this procedure must document that they have read and understand this procedure and the procedures in Section 1.0, General Instructions.

3.0 DEFINITIONS

There are no unique definitions in this procedure.

4.0 BACKGROUND AND/OR CAUTIONS

Refer to the attached ASTM standard method D2974-87 and to the Site Health and Safety plan for hazards and/or cautions.

5.0 EQUIPMENT

Refer to the attached ASTM standard method D2974-87.

6.0 PROCEDURE

Refer to the attached ASTM standard method D2974-87.

7.0 REFERENCES

The following procedures are directly associated with this procedure and should be reviewed prior to field operation:

ASTM STANDARD D2974-87. 1987. Standard Test Method for Moisture, Ash, and Organic Matter of Peat and Other Organic Soils.

UNCONTROLLED

LANL-ER-SOPs in Section 1.0, General Instructions.

8.0 RECORDS

The records generated by this procedure will include the Chain-of-Custody/Request for Analysis form (SOP-01.04) which will include sample collection information logs, and calculations. Also included will be the laboratory report with written calculations, furnace temperature, and whether moisture contents are by proportion of as-received mass (wet mass) or by oven-dried mass.

9.0 ATTACHMENTS

A. ASTM STANDARD D2974-87. 1987. Standard Test Method for Moisture, Ash, and Organic Matter of Peat and Other Organic Soils.

UNCONTROLLED

ASTM STANDARD D2974-87, STANDARD TEST METHOD FOR MOISTURE, ASH, AND ORGANIC MATTER OF PEAT AND OTHER ORGANIC SOILS

Designation: D 2974 - 87

Standard Test Methods for Moisture, Ash, and Organic Matter of Peat and Other Organic Soils[1]

This standard is issued under the fixed designation D 2974; the number immediately following the designation indicates the year of original adoption or, in the case of revision, the year of last revision. A number in parentheses indicates the year of last reapproval. A superscript epsilon (ε) indicates an editorial change since the last revision or reapproval.

UNCONTROLLED

1. Scope

1.1 These test methods cover the measurement of moisture content, ash content, and organic matter in peats and other organic soils, such as organic clays, silts, and mucks.

1.2 The values stated in SI units are to be regarded as the standard.

1.3 *This standard may involve hazardous materials, operations, and equipment. This standard does not purport to address all of the safety problems associated with its use. It is the responsibility of the user of this standard to establish appropriate safety and health practices and determine the applicability of regulatory limitations prior to use.*

2. Summary of Methods

2.1 *Method A*—Moisture is determined by drying a peat or organic soil sample at 105°C. The moisture content is expressed either as a percent of the oven dry mass or of the as-received mass.

2.2 *Method B*—This is an alternative moisture method which removes the total moisture in two steps: (*1*) evaporation of moisture in air at room temperature (air-drying), and (*2*) the subsequent oven drying of the air-dried sample at 105°C. This method provides a more stable sample, the air-dried sample, when tests for nitrogen, pH, cation exchange, and the like are to be made.

2.3 *Methods C and D*—Ash content of a peat or organic soil sample is determined by igniting the oven-dried sample from the moisture content determination in a muffle furnace at 440°C (Method C) or 750°C (Method D). The substance remaining after ignition is the ash. The ash content is expressed as a percentage of the mass of the oven-dried sample.

2.4 Organic matter is determined by subtracting percent ash content from one hundred.

3. Apparatus

3.1 *Oven*, capable of being regulated to a constant temperature of 105 ± 5°C.

NOTE—The temperature of 105°C is quite critical for organic soils. The oven should be checked for "hot spots" to avoid possible ignition of the specimen.

3.2 *Muffle Furnace*, capable of producing constant temperatures of 440°C and 750°C.

3.3 *Evaporating Dishes*, of high silica or porcelain of not less than 100-mL capacity.

3.4 *Blender*, high-speed.

3.5 *Aluminum Foil*, heavy-duty.

3.6 *Porcelain Pan, Spoons*, and equipment of the like.

3.7 *Desiccator*.

4. Preparation of Sample

4.1 Place a representative field sample on a square rubber sheet, oil cloth, or equivalent material. Reduce the sample to the quantity required by quartering and place in a moisture-proof container. Work rapidly to prevent moisture loss or perform the operation in a room with a high humidity.

MOISTURE CONTENT

5. Method A

5.1 Record to the nearest 0.01 g the mass of a high silica or porcelain evaporating dish fitted with a heavy-duty aluminum foil cover. The dish shall have a capacity of not less than 100 mL.

5.2 Mix thoroughly the representative sample and place a test specimen of at least 50 g in the container described in 5.1. Crush soft lumps with a spoon or spatula. The thickness of peat in the container should not exceed 3 cm.

5.3 Cover immediately with the aluminum foil cover and record the mass to the nearest 0.01 g.

5.4 Dry uncovered for at least 16 h at 105°C or until there is no change in mass of the sample after further drying periods in excess of 1 h. Remove from the oven, cover tightly, cool in a desiccator, and record the mass.

6. Method A Calculation

6.1 Calculate the moisture content as follows:

$$\text{Moisture Content, \%} = [(A - B) \times 100]/A$$

where:

A = mass of the as-received test specimen, g, and
B = mass of the oven-dried specimen, g.

6.1.1 This calculation is used primarily for agriculture, forestry, energy, and horticultural purposes and the result should be referred to as the moisture content as a percentage of as-received or total mass.

6.2 An alternative calculation is as follows:

$$\text{Moisture Content, \%} = [(A - B) \times 100]/B$$

where:

A = as-received test specimen, g, and
B = mass of the oven-dried specimen, g.

[1] These test methods are under the jurisdiction of ASTM Committee D-18 on Soil and Rock and are the direct responsibility of Subcommittee D18.18 on Peats and Related Materials.

Current edition approved May 29, 1987. Published July 1987. Originally published as D 2974 - 71. Last previous edition D 2974 - 84.

6.2.1 This calculation is used primarily for geotechnical purposes and the result should be referred to as the moisture content as a percentage of oven-dried mass.

6.3 Take care to indicate the calculation method used.

7. Method B

7.1 This method should be used if pH, nitrogen content, cation exchange capacity, and the like are to be tested.

7.2 Mix the sample thoroughly and select a 100 to 300 g representative sample. Determine the mass of this sample and spread evenly on a large flat pan. Crush soft lumps with a spoon or spatula and let the sample come to moisture equilibrium with room air. This will require at least 24 h. Stir occasionally to maintain maximum air exposure of the entire sample. When the mass of the sample reaches a constant value, calculate the moisture removed during air drying as a percentage of the as-received mass.

7.3 Grind a representative portion of the air-dried sample for 1 to 2 min in a high-speed blender. Use the ground portion for moisture, ash, nitrogen, cation exchange capacity tests, and the like.

7.4 Thoroughly mix the air-dried, ground sample. Weigh to the nearest 0.01 g the equivalent of 50 g of test specimen on an as-received basis. Determine the amount, in grams, of air-dried sample equivalent to 50 g of as-received sample, as follows:

$$\text{Equivalent Sample Mass, g} = 50.0 + [(50 \times M)/100]$$

where:
M = moisture removed in air drying, %.

7.5 Place the sample in a container as described in 5.1 and proceed as in Method A.

8. Method B Calculation

8.1 Calculate the moisture content as follows:

$$\text{Moisture Content, \%} = (50 - B) \times 2$$

where:
B = oven-dried sample, g.

8.1.1 This calculation gives moisture content as a percentage of as-received mass.

8.2 An alternative calculation is as follows:

$$\text{Moisture Content, \%} = [(50 - B) \times 100]/B$$

8.2.1 This calculation gives moisture content as a percentage of oven-dried mass.

ASH CONTENT

9. Method C

9.1 Determine the mass of a covered high-silica or porcelain dish.

9.2 Place a part of or all of the oven-dried test specimen from a moisture determination in the dish and determine the mass of the dish and specimen.

9.3 Remove the cover and place the dish in a muffle furnace. Gradually bring the temperature in the furnace to 440°C and hold until the specimen is completely ashed (no change of mass occurs after a further period of heating).

9.4 Cover with the retained aluminum foil cover, cool in a desiccator, and determine the mass.

9.5 This method should be used for all geotechnical and general classification purposes.

10. Method D

10.1 Determine the mass of a covered high-silica or porcelain dish.

10.2 Place a part of or all of the oven-dried test specimen from a moisture determination in the dish and determine the mass of the dish and specimen.

10.3 Remove the cover and place the dish in a muffle furnace. Gradually bring the temperature in the furnace to 750°C and hold until the specimen is completely ashed (no change of mass occurs after a further period of heating).

10.4 Cover with the retained aluminum foil cover, cool in a desiccator, and determine the mass.

10.5 This method should be used when peats are being evaluated for use as a fuel.

11. Calculation for Methods C and D

11.1 Calculate the ash content as follows:

$$\text{Ash Content, \%} = (C \times 100)/B$$

where:
C = ash, g, and
B = oven-dried test specimen, g.

ORGANIC MATTER

12. Calculation

12.1 Determine the amount of organic matter by difference, as follows:

$$\text{Organic matter, \%} = 100.0 - D$$

where:
D = ash content, %.

13. Report

13.1 Report the following information:

13.1.1 Results for organic matter and ash content, to the nearest 0.1 %.

13.1.2 Furnace temperature used for ash content determinations.

13.1.3 Whether moisture contents are by proportion of as-received mass or oven-dried mass.

13.1.3.1 Express results for moisture content as a percentage of as-received mass to the nearest 0.1 %.

13.1.3.2 Express results for moisture content as a percentage of oven-dried mass as follows:

(*a*) Below 100 % to the nearest 1 %.
(*b*) Between 100 % and 500 % to the nearest 5 %.
(*c*) Between 500 % and 1000 % to the nearest 10 %.
(*d*) Above 1000 % to the nearest 20 %.

14. Precision and Bias

14.1 The precision and bias of these test methods have not been determined. Data are being sought for use in developing a precision and bias statement.

UNCONTROLLED

D 2974

The American Society for Testing and Materials takes no position respecting the validity of any patent rights asserted in connection with any item mentioned in this standard. Users of this standard are expressly advised that determination of the validity of any such patent rights, and the risk of infringement of such rights, are entirely their own responsibility.

This standard is subject to revision at any time by the responsible technical committee and must be reviewed every five years and if not revised, either reapproved or withdrawn. Your comments are invited either for revision of this standard or for additional standards and should be addressed to ASTM Headquarters. Your comments will receive careful consideration at a meeting of the responsible technical committee, which you may attend. If you feel that your comments have not received a fair hearing you should make your views known to the ASTM Committee on Standards, 1916 Race St., Philadelphia, PA 19103.

UNCONTROLLED

Los Alamos National Laboratory **Environmental Restoration Program** Standard Operating Procedure	No: LANL-ER-SOP-11.06 Rev: 0

Cation-Exchange Capacity

UNCONTROLLED

Preparer:	Sandra E. Wagner (Print Name)	Sandra E. Wagner (Signature)	11-26-91 (Date)
Quality Review by:	Terry Morgan (Print Name)	Terry Morgan (Signature)	12/12/91 (Date)
Technical Review by:	Lawrence J. Duffy (Print Name)	Lawrence J. Duffy (Signature)	12/19/91 (Date)
QPPL Approval:	Karen L Warthen (Print Name)	Karen L Warthen (Signature)	3/4/92 (Date)
PM Approval:	Robert W Vocke (Print Name)	Robert W Vocke (Signature)	3-4-92 (Date)

Effective Date: 3-16-92

CATION-EXCHANGE CAPACITY

1.0 PURPOSE

This procedure describes methods that can be used to determine the cation-exchange capacity of soils.

2.0 SCOPE

2.1 Applicability

This procedure can be used for determining the cation-exchange capacity of most soils including calcareous and noncalcareous soils for the Environmental Restoration program

2.2 Training

Field team members using this procedure must document that they have read and understand this procedure and the procedures in Section 1.0, General Instructions.

3.0 DEFINITIONS

There are no unique definitions in this procedure.

4.0 BACKGROUND AND/OR CAUTIONS

Refer to the attached SW-846 method, and to the Site Health and Safety plan for hazards and/or cautions.

5.0 EQUIPMENT

Refer to the attached SW-846 method.

6.0 PROCEDURE

Refer to the attached SW-846 method.

7.0 REFERENCES

The following procedures are directly associated with this procedure and should be reviewed prior to field operations:

EPA SW-846. September 1986. Method 9081 - Cation-Exchange Capacity of Soils (Sodium Acetate).

UNCONTROLLED

LANL-ER-SOPs in Section 1.0, General Instructions.

8.0 RECORDS

The following information will be documented on a Chain-of-Custody/Request for Analysis form or a Daily Activity Log (SOP-01.04) as appropriate:

- Field Sample Number/Identification
- Date and time collected
- Sample container material and size
- Matrix (soil, Lithologic material)
- Test method requested
- Lot and calibration date of calibration solutions used
- pH calibration
- Results from atomic absorption or emission spectroscopy
- Deviations, if applicable

9.0 ATTACHMENTS

A. EPA SW-846, September 1986. Method 9081 - Cation-Exchange Capacity of Soils (Sodium Acetate).

UNCONTROLLED

EPA SW-846, METHOD 9081
CATION-EXCHANGE CAPACITY OF SOILS (SODIUM ACETATE)

UNCONTROLLED

METHOD 9081

CATION-EXCHANGE CAPACITY OF SOILS (SODIUM ACETATE)

1.0 SCOPE AND APPLICATION

1.1 Method 9081 is applicable to most soils, including calcareous and noncalcareous soils. The method of cation-exchange capacity by summation (Chapman, 1965, p. 900; see Paragraph 10.1) should be employed for distinctly acid soils.

2.0 SUMMARY OF METHOD

2.1 The soil sample is mixed with an excess of sodium acetate solution, resulting in an exchange of the added sodium cations for the matrix cations. Subsequently, the sample is washed with isopropyl alcohol. An ammonium acetate solution is then added, which replaces the adsorbed sodium with ammonium. The concentration of displaced sodium is then determined by atomic absorption, emission spectroscopy, or an equivalent means.

3.0 INTERFERENCES

3.1 Interferences can occur during analysis of the extract for sodium content. Thoroughly investigate the chosen analytical method for potential interferences.

4.0 APPARATUS AND MATERIALS

4.1 Centrifuge tube and stopper: 50-mL, round-bottom, narrow neck.

4.2 Mechanical shaker.

4.3 Volumetric flask: 100-mL.

5.0 REAGENTS

5.1 Sodium acetate (NaOAc), 1.0 N: Dissolve 136 g of $NaC_2H_2O_2 \cdot 3H_2O$ in water and dilute it to 1,000 mL. The pH of this solution should be 8.2. If needed, add a few drops of acetic acid or NaOH solution to bring the reaction of the solution to pH 8.2.

5.2 Ammonium acetate (NH_4OAc), 1 N: Dilute 114 mL of glacial acetic acid (99.5%) with water to a volume of approximately 1 liter. Then add 138 mL of concentrated ammonium hydroxide (NH_4OH) and add water to obtain a volume of about 1,980 mL. Check the pH of the resulting solution, add more NH_4OH, as needed, to obtain a pH of 7, and dilute the solution to a volume of 2 liters with water.

5.3 Isopropyl alcohol: 99%.

6.0 SAMPLE COLLECTION, PRESERVATION, AND HANDLING

6.1 All samples must be collected using a sampling plan that addresses the considerations discussed in Chapter Nine of this manual.

7.0 PROCEDURE

7.1 Weigh 4 g of medium- or fine-textured soil or 6 g of coarse-textured soil and transfer the sample to a 50-mL, round-bottom, narrow-neck centrifuge tube. (A fine soil has >50% of the particles <0.074 mm, medium soil has >50% >0.425 mm, while a coarse soil has more than 50% of its particles >2 mm.

7.2 Add 33 mL of 1.0 N NaOAc solution, stopper the tube, shake it in a mechanical shaker for 5 min, and centrifuge it until the supernatant liquid is clear.

7.3 Decant the liquid, and repeat Paragraph 7.2 three more times.

7.4 Add 33 mL of 99% isopropyl alcohol, stopper the tube, shake it in a mechanical shaker for 5 min, and centrifuge it until the supernatant liquid is clear.

7.5 Repeat the procedure described in Paragraph 7.4 two more times.

7.6 Add 33 mL of NH_4OAc solution, stopper the tube, shake it in a mechanical shaker for 5 min, and centrifuge it until the supernatant liquid is clear. Decant the washing into a 100-mL volumetric flask.

7.7 Repeat the procedure described in Paragraph 7.6 two more times.

7.8 Dilute the combined washing to the 100-mL mark with ammonium acetate solution and determine the sodium concentration by atomic absorption, emission spectroscopy, or an equivalent method.

8.0 QUALITY CONTROL

8.1 All quality control data should be maintained and available for easy reference or inspection.

8.2 Employ a minimum of one blank per sample batch to determine if contamination or any memory effects are occurring.

8.3 Materials of known cation-exchange capacity must be routinely analyzed.

UNCONTROLLED

9.0 METHOD PERFORMANCE

9.1 No data provided.

10.0 REFERENCES

10.1 This method is based on Chapman, H.D., "Cation-exchange Capacity," pp. 891-900, in C.A. Black (ed.), Method of Soil Analysis, Part 2: Chemical and Microbiological Properties, Am. Soc. Agron., Madison, Wisconsin (1965).

UNCONTROLLED

METHOD 9081

CATION-EXCHANGE CAPACITY OF SOILS (SODIUM ACETATE)

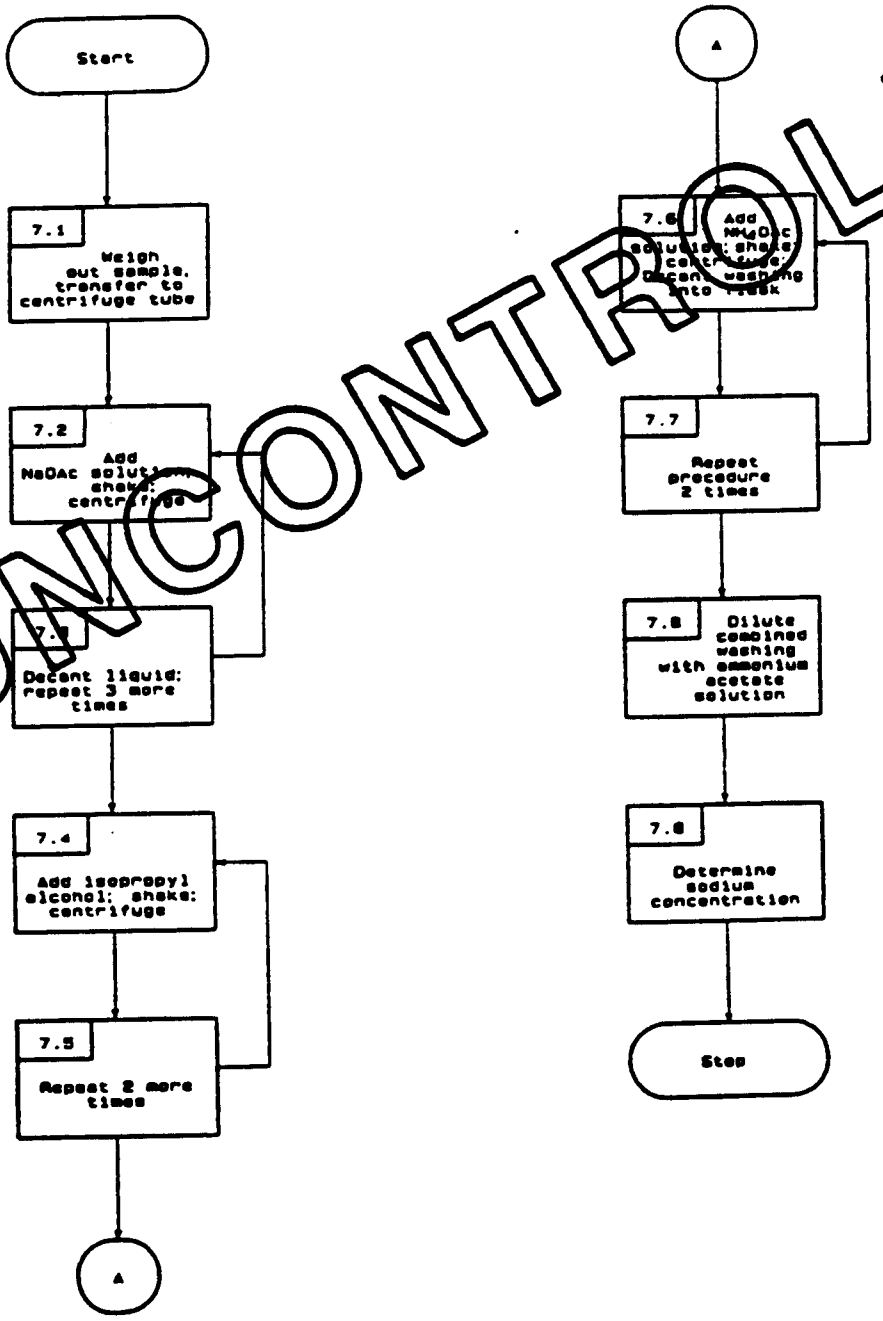

UNCONTROLLED

Los Alamos National Laboratory **Environmental Restoration Program** Standard Operating Procedure	No: LANL-ER-SOP-12.01 Rev: 1

FIELD LOGGING, HANDLING, AND DOCUMENTATION OF BOREHOLE SAMPLES

UNCONTROLLED

Prepared by	E. Dow Davidson, Jr. (Print Name)	(Signature)	04/28/94 (Date)
Quality Review by	Tom Farmer (Print Name)	(Signature)	5/20/94 (Date)
Technical Review by	Greg Bayhurst (Print Name)	Greg Bayhurst (Signature)	5-24-94 (Date)
PM Approval	David McInroy (Print Name)	(Signature)	5/20/94 (Date)
QPPL Approval	L. Souza (Print Name)	(Signature)	5/20/94 (Date)

Effective Date: 5/25/94

FIELD LOGGING, HANDLING, AND DOCUMENTATION OF BOREHOLE SAMPLES

Contents

1.0 PURPOSE 2

2.0 SCOPE 2
- 2.1 Applicability 2
- 2.2 Training 2

3.0 DEFINITIONS 2

4.0 BACKGROUND AND CAUTIONS 4

5.0 EQUIPMENT 4

6.0 PROCEDURE 5
- 6.1 Sample Staging 5
- 6.2 Core Measurement and Determination of Core Loss 7
- 6.3 Marking Core (Depth Notation and Stripes) 8
- 6.4 Initial Core Photography 9
- 6.5 Core Logging 11
- 6.6 Removal of Analytical Samples 13
- 6.7 Core Box Loading and Storing 13
- 6.8 Cuttings Handling Procedure 15

7.0 REFERENCES 16

8.0 RECORDS 17

9.0 ATTACHMENTS 17

UNCONTROLLED

FIELD LOGGING, HANDLING, AND DOCUMENTATION OF BOREHOLE SAMPLES

1.0 PURPOSE

This procedure provides instructions for field logging, documentation, and handling of borehole materials. The implementation of this procedure ensures that borehole samples will be correctly identified and the data derived from samples will be traceable back to the origination in the field.

2.0 SCOPE

This procedure includes activities required to collect, describe, document, and temporarily store Environmental Restoration (ER) borehole materials (core, cuttings) at operable unit (OU) drill sites.

2.1 Applicability

This procedure applies to sample management site workers performing collection, field logging, documentation, and packaging of borehole materials as specified in site-specific Resource Conservation and Recovery Act (RCRA) Field Investigation (RFI) work plans.

2.2 Training

Sample management site workers will be trained to this procedure before conducting work, and will document that they have read and understood this procedure and procedures outlined in the Los Alamos National Laboratory (Laboratory) ER Program Standard Operating Procedure (SOP) Section 1.0, General Instructions. Sample management site workers performing structural and lithologic logging of core must hold a minimum of a Bachelor's degree in Geology or the Earth Sciences or equivalent. Their qualifications must be approved by the Geology Technical Team Leader (TTL).

3.0 DEFINITIONS

A. Core: A core is a cylindrical section of rock, or fragment thereof, that is taken as a sample of the interval penetrated by a core bit and that is brought to the surface for examination and/or analysis.

B. Core Run: A core run is an attempt to drill and recover a length of core; also the piece of core recovered from a core barrel during the core run.

C. Curation Plan: A document summarizing a specific Operable Unit's plan for sample handling, specimen collection, and core curation. Included planned depth of boreholes, number of specimens to be removed, and a schedule for these activities.

UNCONTROLLED

The Curation Plan also allows the Field Team a place to document options in sample curation available in this SOP.

D. Cuttings: Cuttings are chips of rock produced during drilling that are removed from the borehole by circulation of drilling fluids (gas, foam, or liquid).

E. Daily Drilling Summary: The Daily Drilling Summary is a primary record of daily drill-site activity. The Field Team Leader (FTL) is responsible for keeping a chronological record of activities (using a 24-hour time clock) that occur during drill-site operations. An example can be found in LANL-ER-SOP-4.01, Drilling Methods and Drill-Site Management.

F. Drilling Package: A Drilling Package is prepared for each OU and includes the general and detailed requirements for performing drilling and associated activities. The Drilling Package consists of a detailed Drilling Plan, drilling specifications, Curation Plan, and Geophysical Logging Plan and specifications to meet the sampling requirements defined in individual RFI Work Plans.

G. Fluids: Fluids collected as samples include gases and liquids.

H. Rubble: Rubble is defined as pieces of core with diameters smaller than half the diameter of whole core such that reconstruction between individual pieces is not possible.

I. Sample: A sample is a physical entity, collected in the field, representative of the whole, that is the original source material for all subsequent analyses and testing activities.

J. Sample Coordination Facility: The facility operated by **CST-9** that functions as the clearing house for analytical chemical specimens collected for the ER Program. The Sample Coordination Facility should not be confused with the **EES-4** Sample Management Facility.

K. Sample Management Facility: The Sample Management Facility (SMF) is the facility (Building TA-3-271) used for the documentation, examination, physical processing, storage and control of selected samples, remnants, and records collected and distributed for the ER Program. The SMF consists of a physical facility and equipment designed to effectively process and preserve these samples, remnants, and records.

L. Sample Management: The collection, documentation, storage and control of selected borehole materials and records. The Subsurface Technologies Team is responsible for guiding sample management activities at the drill site.

M. Specimen: A specimen is a subsection or portion which has been removed from a sample that undergoes testing, analysis, or other technical or scientific evaluation. It is also referred to as an analytical sample.

UNCONTROLLED

4.0 BACKGROUND AND CAUTIONS

This procedure is limited to the activities necessary to take custody of core and cuttings from drill rig personnel, conduct field screening, remove time sensitive analytical samples, complete photo documentation, perform field structural and lithologic description, and mark, package, and temporarily store the borehole materials at a drill site Sample Storage Trailer. This procedure does not address the collection of soil, rock, or fluid samples exclusively for field screening or laboratory analysis for hazardous or radiological waste. The collection of borehole fluids will be controlled by LANL-ER-SOP-1.02. Analytical sample containers and preservation and will be coordinated with the CST-9 Sample Coordination Facility (SCF).

This procedure prescribes the specific sample management methods to be followed and documentation to be prepared during handling and field logging of borehole materials identified in the site Curation Plan. A copy of this procedure with supporting references and forms will be available at the drill site at all times. The OU-specific Drilling Package and Sampling and Analysis Plan will also be available at the drill-site.

The requirements of this procedure are subject to modification depending on the exact nature of the borehole being drilled, as delineated in a Drilling Package. Borehole materials temporarily stored at the Sample Storage Trailer will be maintained in environmental conditions as defined in the relevant Curation Plan for each OU. Sample Management site workers will be familiar with the site specific Health and Safety Plan and will participate in all site pre-entry and safety meetings.

The site-specific Health and Safety Plan will function as the document defining the types and extent of monitoring activities to be performed before, during, and after borehole material collection and processing activities.

Before drilling operations, a Sample Management Core Logging Trailer and a Sample Storage Trailer will be set up at the drill site (see LANL-ER-SOP 1.01, General Instructions for Field Investigations). Copies of the Drilling Package, reference materials, applicable procedures, and an adequate quantity of documentation forms will be available in the Core Logging trailer.

5.0 EQUIPMENT

Sample management field equipment will be assembled before initiation of field activities. The Sample Management Core Logging Trailer will contain the following equipment: core racks, core transport trays, work table, photography apparatus, and container labeling and packaging equipment. The unit will be well-lighted and will be heated and ventilated. The unit will be secure, and operated as a limited access facility.

The equipment and supplies to be used are listed in Attachment A.

UNCONTROLLED

6.0 PROCEDURE

This procedure controls the Sample Management site worker's handling of the core from the time the core is withdrawn from the outer drill tube until the core is ready to be transported to the ER Program's SMF. For the purposes of this SOP, core may also refer to other solid samples such as drive samples, or augered samples. These activities will be performed under the direction of the Field Team Leader FTL and the Technical Team Leader for Subsurface Technologies (STTL). The number of sample management site workers involved in handling the core inner tubes will be kept to a minimum to simplify chain-of-custody interactions and to reduce total number of personnel that are necessary in exclusion zones.

Core handling procedures will be performed in sequential order. Any deviation from this procedure or from the Curation Plan requires prior consultation and agreement with the Operational Unit Project Leader (OUPL), the FTL, and the STTL. Deviations and the rationale for changes in methods will be recorded on the Daily Drilling Summary.

Personal protective gear will be worn at specified levels outlined in the site-specific Health and Safety Plan. All personnel handling the cores and other samples shall wear the required protection. Personnel handling the samples will use new clean gloves each time a new core tube is handled.

6.1 Sample Staging

The driller or helper will collect the core (or other sample form) according to drilling methods outlined in the Drilling Package, withdraw the sample from the borehole, and place the inner tube or sampler on new plastic sheeting, located on a work bench in the Exclusion Zone.

A. Field Screening

1. Once the sample has been placed on the work bench technicians from the Health Physics Group (ESH-1) and the Industrial Hygiene and Safety Group (ESH-5) will screen the samples for radioactive/hazardous constituents. This screening will be performed for two purposes: 1) to collect field screening data that will determine the immediate hazards due to handling of the samples at the site, and 2) to determine the levels of certain radiological and non-radiological characteristics for comparison with SMF health and safety based acceptance criteria for samples.

2. A comparison will be made with the action levels for radiation and organic vapors established in the site Health and Safety Plan. If readings indicate activity or concentrations above action levels then sample handling activities will temporarily be suspended. A decision will be made by the Site Safety Officer (SSO) and FTL as to restarting work with upgraded personal protective equipment, modification of the level of

UNCONTROLLED

logging required in this procedure, or other means to ensure the health and safety of workers.

3. Field screening values for penetrating radiation, radiologically contaminated particles, and volatile organic compound contamination will be recorded on the SMF Field Screening Log (Attachment J) or equivalent. The prescribed field screening techniques and levels are shown in Table 1.

TABLE 1

HEALTH AND SAFETY BASED ACCEPTANCE CRITERIA FOR SAMPLES SUBMITTED TO THE SAMPLE MANAGEMENT FACILITY

HAZARD	SCREENING METHOD	ACCEPTANCE CRITERIA
Penetrating Radiation	Gross Beta/Gamma Detector	<100,000 dpm/100 cm^2 @ 1 in from sample
Beta/Gamma Contaminated Particulates	Beta/Gamma Detector	<100,000 dpm/100 cm^2
Alpha Contaminated Particulates	Gross Alpha Detector	<1,000 dpm/100 cm^2
Volatile Organic Compounds	PID, FID	<5.9 ppm total VOC

UNCONTROLLED

4. Samples will be field screened on a run by run basis, the data recorded and certified by the ESH-1 and ESH-5 technician(s) on the SMF Field Screening Log (Attachment J) or equivalent. Additionally the technicians will record the screening data on an index card that will correspond to the core run. This card will stay with the core run as it is moved to the Core Logging Trailer or the Sample Storage Trailer. The Log (and index card) will indicate whether the samples are above or below the acceptance criteria. If above, the samples will be held at the Sample Storage Trailer on site until a determination is made as to their disposition. If below, the samples are now available for movement to the Core Logging Trailer and subsequent transport and acceptance at the SMF (SM-271). There may be additional screening required prior to unconditional release to the SMF. For example additional screening could consist of liquid scintillation counting for sites suspected of being contaminated with tritium or alpha/gamma spectroscopy for unidentified radionuclides.

B. Samples to Core Logging Trailer

Upon the determination that samples are safe to handle in the Core Logging Trailer:

1. Sample management site workers will obtain run information (Run Number, Depth Interval) from the driller or a helper. The driller will provide the information on a run card (4" x 6" index card or equivalent). The sample management site workers will also gather the field screening data index card from the ESH-1 and ESH-5 technician(s). Sample management site workers will place the run card at the top end of the core in the inner liner or core transport tray. Sample management site workers will ensure that the core is not switched end-for-end during transport to the Sample Management Core Logging Trailer.

2. The core will then be transferred to the Sample Management Core Logging Trailer. Sample management site workers or alternatively, drill rig personnel will carry the core transport tray to the Core Logging Trailer and place in a core rack lined with clean polyethylene sheeting.

3. A polystyrene foam run marker (Attachment C) replaces the driller's run card at the top of the run.

6.2 Core Measurement and Determination of Core Loss

A. Temporary Packaging of Time Sensitive Analytical Samples

1. Many time-sensitive analyses require that analytical samples be collected, containerized, and preserved soon after the borehole materials are brought to the surface. The requirement for the removal of analytical samples directly from the drill site will be delineated in the site-specific Curation Plan.

2. Individual sections of core containing analytical samples that would suffer damage if left exposed while awaiting measuring, marking, photography, and logging will be temporarily packaged.

B. Measurement of Run Interval

1. Starting at the top of the core run, pieces of core will be fitted together to reconstruct larger sections of core. Rubble zones will be reconstructed to accurately represent the interval from which they were recovered.

2. The core will be measured with a steel engineering tape to the nearest 0.1 ft. Enter the amount of core drilled and recovered on the Run Marker, the Core Sample Log, and on the Daily Drilling Summary. True core loss will be determined as described in the following section and do not document core loss until the next run is recovered.

C. Determination of Core Loss

UNCONTROLLED

1. If a core loss is indicated after measuring the core, the sample management site workers and the driller will attempt to determine the interval(s) at which the loss(es) occurred.

2. If the bottom portion of a run is not recovered until the following run is cut, this apparent core loss may result in inaccurate core measurement. The core may be recovered in the following run and may be identified by bit marks, core match, or other clues. The core stub may also be ground up and subsequently recovered as rubble in the next run.

3. If more core is recovered from the barrel than was cut by that run, reconcile the extra core with the last (up hole) core loss or with the next down hole run. Sometimes more core will be recovered from a run than was cut because of the way the core breaks below the core catcher.

4. If the ends of two successive core runs fit together, determine the position(s) of the loss(es) using the following procedure:

   a. Assign the core loss to obvious loss zones.

   b. If there are no obvious loss zones, assign the core loss to the lower most rubble zone in that run.

   c. If there are no rubble zones, place the loss at the bottom of the run.

   d. Enter the borehole ID, the core loss interval, and the total amount of true core loss on the label of a polystyrene foam "Lost Core Marker" (Attachment C) and place in the proper location.

UNCONTROLLED

6.3 Marking Core (Depth Notation and Stripes)

A. Measure the core to the nearest 0.1 foot (+/- 0.2 ft) with an engineering measuring tape. The top of the run shall be the starting point for measurement. If the top of the run is angled (e.g., a fracture) and does not match with the previous run, the starting point shall be the mid-point of the fracture.

B. Circumscribe (as much as possible) the core with footage marks at one-foot intervals. Write depths beside footage marks. When a footage mark falls within a rubble zone, write the depth on an index card.

   1. Ensure that the depths written on the core correspond to the depths noted on the Run Marker.

   2. Use red and blue permanent markers to place parallel orientation stripes on core, red on right, from top to bottom (see Attachment G).

C. An alternative method for marking depths and orientation stripes may be used If the core sample is too soft or friable for marking directly on the surface. After core has undergone initial photography and logging has been completed it may be placed in polyethylene lay-flat tubing and the ends heat sealed (this process must take place subsequent to all field analytical samples being removed). The red and blue parallel orientation stripes and the one-foot depth markings may then be drawn directly on the surface of the polyethylene lay-flat tubing.

D. Some chemical analyses may be planned to be performed after core has been stored at the SMF. If there is a concern that those analyses could be adversely affected by organic markers an alternative method of marking may be used. If the core is competent, the orientation marks will be created by the etching of two parallel lines into the core surface using an awl and a flat-bladed screwdriver. The awl line will be etched on the left side of the core, the screwdriver line on the right, for the entire length of the core. The awl will replace the blue orientation stripe, the screwdriver will replace the red orientation stripe. If this alternative marking is used the footage marks at one-foot intervals will be etched around the core with an awl, actual depths will not be scribed on the core at footage marks for this alternate method of marking. All competent core will be scribed with enough pressure so that the lines are easily visible, but not excessive force that would obliterate or severely alter the surface of the core.

UNCONTROLLED

6.4 Initial Core Photography

Field photography of the core prior to excessive handling is a reliable method to document the approximate in situ condition of the core and provides a visual record in the event of core destruction. Field photo documentation occurs twice: while core is in the inner tube and after the core has been logged and boxed. Depending upon the requirements of the site-specific Curation Plan core may be photographed with either a still or video camera or both.

A. Still Photography

1. Initial still photographs will be taken of the core while in the inner liner or core tray, immediately after core orientation and marking is completed.

2. A 35 mm format single lens reflex camera will be used for still field photography. Equipment and accessories will include but not be limited to: lenses, lens filters, film matched with the type of lighting, camera rack, flood lights or flash unit, color card, scale in 0.1 ft intervals.

3. All core markings will be complete, accurate, legible, and visible to the photographer. A color card and an information card labeled with the borehole identification (ID), run number, depth interval, date and core loss interval(s) will be centered in the photograph above the core. A

scale marked in 0.1 ft intervals will be placed parallel to the section being photographed.

4. The camera will be attached to the camera rack and checked for distance, focus f-stop, and shutter speed. The field of view will be checked for shadows or obstructions. Each exposure shall include approximately 2 ft of core; the first exposure will be made at the top of the run, and continuous exposures made until the entire run of core is photographed.

5. Individual close-up exposures of specific interesting features in the core may be taken after the entire length of the run has been sequentially exposed. This will be done by placing a color card and index card with the borehole ID, depth or depth interval, and description of the feature beside the core interval of interest. Complete the Field Photographic Log (Attachment H).

6. Adhesive labels with the following information will be attached to the film canister and to the roll of film: borehole ID, run number(s), date, roll number, and total footage interval documented by the roll. The film will be locked in a cool dark location by sample management site workers and periodically transferred off-site for development.

B. Video Photography

The site specific Curation Plan designates whether video photography in addition to still photography is necessary for complete records of the subject core. If video photography is specified:

1. Initial video tape photographs will be taken of the core while still in the inner liner, immediately after core orientation and marking is completed.

2. A high-resolution (8 mm) video camera will be used for video photography of the core. Equipment and accessories should include: camera rack, flood lights, power supply, scale in 0.1 ft intervals.

3. All core markings will be complete, accurate, legible, and visible to the photographer. An information card label with the borehole ID, run number, depth interval, date and core loss interval(s) will be placed at the top of the core run. A scale marked in 0.1 ft intervals will be placed next to the core run.

4. The camera will be attached to the camera rack and checked for distance and focus. Ensure the proper cassette is identified and placed in the video camera. The field of view will be checked for shadows or obstructions. The videotaping will proceed from the top to the bottom of the run. The photographer will provide borehole ID, run number and depth interval information on the audio track of the video by speaking

UNCONTROLLED

the microphone during taping. Complete the Field Video Log (Attachment D).

5. Write the following information on the videotape cassette: borehole ID, run number(s), dates, tape number, and total footage interval documented by the tape. Lock tape in a cool, dark location until transfer to the SMF.

6.5 Core Logging

A. Log the core by run, using the Core Sample Log (Attachment E).

1. Record the following information on the Core Sample Log: Borehole Identification Number, Technical Area and Operable Unit identification, Drill Depth Interval, page number and total pages, Driller Box Numbers included on log, Start Date/Time, End Date/Time, Drilling Equipment/ Method, Sampling Equipment/Method, Prepared By (name of logger), Date, and Checked By Date.

2. Draw and describe significant structural features and general lithology and petrology (and soil descriptions if applicable) on the form using standard geological symbols and terms (see Attachment F). The Core Sample Log also contains columns for entering the Depth, Recovery (feet per feet %), Field Borehole Analytical Sample Number, Field Screening Results, Top/Bottom of Core in Box, Lithologic Unit, Graphic Log, and Notes.

3. The columns on the log will be used to record a lithologic description of the rock, as well as the accepted geologic formation and/or member names. Depths will be recorded in feet to the nearest 0.1 ft; features may be measured in tenths of a foot, centimeters, or millimeters as appropriate.

4. This log format will be used to ensure that characteristic features of lithologic units will not be overlooked. Charts, tables, and other references will be available at the site to aid the sample management site worker in logging features in a consistent manner. This logging format consists of three parts: a) Primary Descriptive Terms, b) General Features, and c) Specific Features.

   a. Primary Descriptive Terms: noted for every lithologic unit in the following order, offering a broad skeletal description of the interval.

   <u>Unit</u> - a distinct body of rock, representing a discrete geologic event; distinguished from other units above and below it by different physical properties (e.g., color, mineralogy, and morphology).

UNCONTROLLED

Type - this is an adjective describing the unit, suggestive of the depositional mode and is generally ash flow, ash fall, bedded, or reworked.

Color - hue and tone noted under appropriate lighting conditions, along with reference to a standard geologic color chart (e.g., geological Society of America Rock-Color Chart); e.g., light red (visual), SR 6/6 (color chart reference).

Welding - (for use on tuff units) degree of welding: choices are nonwelded, moderately and densely.

Alteration - degree of alteration (primarily for use on tuff units): choices are vitric, devitrified, and vapor phase altered

Core Competency - how well does the recovered core holds together. Terms such as soft/hard, poorly indurated/well indurated are acceptable.

b. General Features: characteristic of the entire unit interval; estimate percent volumes (volumetric proportions) of these features, when applicable, using a suitable percent volume chart; when present general features will be described in the following order; additional detail may be added as appropriate:

Pumice - includes percent volume of the interval, alteration features, color, size, range, and flattening ratio.

Lithic fragments - includes percent volume of the interval, rock type, color, shape (sphericity and roundness) and diameter of fragments.

Phenocrysts - includes percent volume of the interval, mineral type (if distinguishable and expressed minimally as mafics/quartz/feldspar), color, shape, and diameter.

Unit contact - describes nature of contact with underlying unit; generally ranges from sharp to gradational but may include any appropriate phrase.

Matrix - describe color and whether matrix is dense and non-porous or open and porous.

c. Specific Features: Specific Features are characteristic of a zone within a unit interval. These are isolated, localized features and are not common throughout the unit. Due to their localized nature, these features always contain depth notation, e.g., "at 702.3 ft, a 0.1 ft elongate fracture with calcite infilling" or from 325.7 - 328.2 ft, numerous very small (0.05 ft) euhedral, very dark red (5R2/6) lithic fragments. Also foam markers (run, core loss) will be logged here.

UNCONTROLLED

6.6 Removal of Analytical Samples

In order to establish the correct origination point for the analytical samples the core will be measured before the removal of any analytical samples. No core will be removed from the field before it has been marked and photographed unless specifically called for in the Curation Plan. Individual sections of a core that contain time sensitive analytical samples will be temporarily packaged immediately after the core run has been moved to the Sample Management Core Logging Trailer (see Section 6.2, Temporary Packaging of Time Sensitive Analytical Samples).

A. Prior to the analytical samples being removed from the drill site, sample management site workers will complete the Field Borehole Analytical Sample Removal Checklist (Attachment B). This checklist will be used for transfer of all analytical samples from sample management site workers to off site, including to the CST-9 Sample Coordination Facility. The following steps outline the procedure for removal of analytical samples from the drill site:

1. Evaluate the list of requested intervals or features from the Curation Plan.

2. The core may need to be broken or cut to retrieve a portion for an analytical sample.

3. Temporarily package individual sections of core containing analytical samples that would suffer damage if left exposed while awaiting measuring.

4. Measure, mark, photograph, and log core.

5. Affix a sample label (Field Borehole Analytical Sample) to the packaging material containing the analytical sample. The Field Borehole Analytical Sample label contains Borehole ID, interval, requester, and unique number.

6. Remove the analytical sample from the core and place a foam marker at the location the sample portion was removed. Affix the duplicate sample sticker (Field Borehole Analytical Sample) to the foam marker.

7. Release the analytical sample(s) to the requester (in most cases CST-9) who will package and ship the analytical samples according to LANL-ER-SOP-1.02, Sample Containers and Preservation and SOP-1.03, Handling, Packaging, and Shipping of Samples. Document the process according to SOP-1.04, Sample Control and Field Documentation.

6.7 Core Box Loading and Storing

A. Boxing Samples

UNCONTROLLED

1. Store waxed (interior only) cardboard core boxes fitted with polystyrene foam cradles in sufficient numbers to accommodate projected daily core recovery cycles at the drill site.

2. Box the core with the top of the run in the upper left corner and with core orientation maintained (Attachment G).

3. Transfer all polystyrene foam markers (Run, Lost Core, and Analytical Sample Removed) from their position in the core rack to their corresponding position in the core box during the loading process.

B. Bagging Rubble

1. Sufficient space will be left in the core box for intervals of rubble between sections of whole core. Rubble zones will be removed with a minimum of disruption from the core tray (or inner tube) after all the whole core sections have been placed in the core box. An interval of rubble will be pushed to the end of the inner tube. A piece of split **PVC** tubing slightly larger in diameter than the inner tube will be cradled under one end of the inner tube until the ends are parallel. A piece of lay-flat tubing will be slipped over the inner tube, the split PVC tube, and the interval of rubble.

2. The section of rubble will then be pushed over the edge of the inner tube while the PVC and lay-flat tubing are pulled parallel and away from the inner tube. All rubble will be bagged to the nearest one foot; that is, no lay-flat tubing will contain more than one foot of rubble nor will it contain rubble from both sides of a footage mark.

3. After the rubble has been transferred from the inner tube (or core tray) the split PVC tube will be removed, and the ends of the lay-flat tubing will be heat sealed. The sealed sections of rubble will be labeled with borehole ID and depth intervals represented by writing the top depth at the top of the sealed tubing and the bottom at the bottom of the tubing. Orientation stripes will be placed on the tubing as described in Section 6.3.

4. After each run is loaded enter information on the contents of the boxes containing that run on two adhesive labels. The label is shown in Attachment G. Affix these labels in the left-hand corner of the down hole end on both the lid and body of the box.

C. Photography of Boxed Core

Sample management site workers will photograph boxed core prior to shipment off site. A card displaying box bar code number, borehole ID, date, name of photographer, and color bar will be placed adjacent to the core box. A scale marked in 0.1 ft intervals will be placed parallel to the box. Complete the Field Photographic Log (Attachment H).

UNCONTROLLED

D. Sealing of Core

All core samples will normally be placed in polyethylene lay-flat tubing and heat sealed In an effort to preserve the core and to minimize the release of possible contaminants from the samples. Any deviation from this practice must be placed in the OU-specific Curation Plan.

1. Each row of core will be placed into polyethylene lay-flat tubing as a unit. This will include the core and packaged rubble, the polystyrene foam core cradle, and the cardboard divider pad. The entire unit will be carefully lifted from the box and slipped into the lay-flat tubing and heat sealed.

2. At this point the surface of the lay-flat may be marked with orientation, and footage marks if the core was too unconsolidated prior to do so earlier.

6.8 Cuttings Handling Procedure

Collect cuttings if specified in the Curation plan. Collect specified amounts and handle according to Curation Plan. Collect cuttings that represent the targeted interval.

A. Field Screening

1. The ESH-1 and ESH-5 technicians will field screen the cuttings for radiation and organic vapors. A comparison will be made with the action levels for radiation and organic vapors established in the site-specific Health and Safety Plan. If readings indicate activity or concentrations above action levels then cuttings handling activities will temporarily be suspended. A decision will be made by the SSO and FTL as to restarting work with upgraded personal protective equipment, modification of the level of logging required in this procedure, or other means to ensure the health and safety of workers. Field screening values for penetrating radiation, radiologically contaminated particles, and volatile organic contamination will be recorded on the SMF Field Screening Log (Attachment J) or equivalent .

2. Cuttings will be field screened on a run by run basis, the data recorded and certified by the ESH-1 and ESH-5 technician(s) on the SMF Field Screening Log or equivalent. The Log will indicate whether the samples are above or below the acceptance criteria. If above, the samples will be held at the Sample Storage Trailer on site until a determination is made as to their disposition. If below, the samples are now available for release for transport and acceptance at the SMF (SM-271). There may be additional screening required prior to unconditional release to the SMF.

UNCONTROLLED

B. Logging Cuttings by Sample Management Site Workers

1. Lay out cuttings in rows convenient for logging.

2. Make subdivisions within these rows at the discretion of the on-site geologist.

3. Put a marker in the place of any removed samples to preserve the continuity within the rows.

4. Log cuttings by scanning the rows and determining lithologic breaks based on color or other textural changes. Write lithologic descriptions on the Field Bit Cuttings Log (Attachment I).

C. Bagging

1. Place a sufficient quantity of representative cuttings, as specified in the Curation Plan, in plastic sample bags (alternative means such as glass, plastic jars, or polyethylene lay-flat tubing may be used if dictated by the Curation Plan).

2. Label the bag. A bag label will be marked with the following information: Date, Bag Number, Borehole Identification, Depth Interval, and Collector.

3. Place a duplicate label printed on non-tearing, waterproof paper inside the bag and tightly seal.

D. Boxing and Labeling

1. After cuttings have been bagged and labeled, box the bags in a manner similar to core boxing (see Section 6.7).

2. Record the interval of the cuttings contained in the box on two adhesive labels. Affix these labels in the left hand corner of the down hole end on both the lid and the body of the box.

3. Seal with nylon filament strapping tape in preparation for temporary storage at the Sample Storage Trailer.

7.0 REFERENCES

LANL-ER-QPP, Quality Program Plan for Environmental Restoration Activities
LANL-ER-SOP-1.01, General Instructions for Field Investigations
LANL-ER-SOP-1.02, Sample Containers and Preservation
LANL-ER-SOP-1.03, Handling, Packaging, and Shipping of Samples
LANL-ER-SOP-1.04, Sample Control and Field Documentation
LANL-ER-SOP-1.05, Field Quality Control Samples
LANL-ER-SOP-1.06, Management of RFI-Generated Waste

UNCONTROLLED

LANL-ER-SOPs in Section 2.0, Health and Safety in the Field
LANL-ER-SOP-4.01, General Drill Site Management

"Branch Technical Procedure: Sample Management for the Yucca Mountain Project Office," 1989, Yucca Mountain Project Office, Las Vegas, NV

Goff, S.J., 1986, "Curatorial Policy Guidelines and Procedures for the Continental Scientific Drilling Program," Los Alamos National Laboratory Report LA-10542-0BES, 23 p.

Goff, S.J., 1988, "Field Procedures Manual: Shady Rest, California, and Sulphur Springs, New Mexico," Los Alamos National Laboratory Report LA-11453-0BES, 13 p.

UNCONTROLLED

8.0 RECORDS

Field Photographic Log
Field Video Log
Daily Drilling Summary
Field Borehole Analytical Sample Removal Checklist
Field Screening Log
Core Sample Log
Field Bit Cuttings Log

The SMF is ultimately responsible for transfer of these records to the ER Records Processing Facility in accordance with the procedure for Laboratory ER Records Management (LANL-ER-AP-02.1)

9.0 ATTACHMENTS

Attachment A - Equipment and Supplies Checklist for Field Logging, Handling, and Documentation of Borehole Materials
Attachment B - Field Borehole Analytical Sample Removal Checklist
Attachment C - Run Markers
Attachment D - Field Video Log
Attachment E - Core Sample Log
Attachment F - Example of Core Log Completed
Attachment G - Marking and Boxing Core
Attachment H - Field Photographic Log
Attachment I - Field Bit Cuttings Log
Attachment J - Field Screening Log

Los Alamos National Laboratory Environmental Restoration Program
EQUIPMENT AND SUPPLIES CHECKLIST FOR FIELD LOGGING, HANDLING, AND DOCUMENTATION OF BOREHOLE MATERIALS

UNCONTROLLED

____ engineering measuring tape
____ colored temporary markers
____ desk
____ core racks
____ work table/surface
____ indelible marker pens
____ hand lens
____ grain-size chart
____ polystyrene core cradles
____ knifes/blades
____ chisel
____ magnet
____ rags and sponges
____ PVC core trays
____ non-tearing, waterproof labels
____ cuttings containers
____ Field Borehole Analytical Sample Checklist
____ polystyrene run blocks
____ miscellaneous office supplies
____ safety equipment
____ container labeling and packaging equipment
____ wire mesh sieve
____ waxed cardboard boxes and divider (specifications depend on core diameter)
____ Polyethylene Lay-Flat tubing
____ impermeable packaging
____ pocket transit (0-360 degree)
____ rock hammer
____ dilute HCl
____ heat sealer
____ 4" x 6" index cards
____ photographic equipment
____ videographic equipment
____ computer
____ spray bottle
____ filament tape
____ rock breaker/or rock saw
____ protractor
____ binocular microscope
____ electric power
____ standard rock-color chart
____ Field Video Log
____ Field Photographic Log
____ Field Bit Cutting Log
____ Core Sample Log
____ Daily Drilling Summary
____ Field Screening Log
____ geologic dictionary and other references and volumes
____ Chain-of-Custody/Request for Analysis Forms
____ Polyethylene sheeting

LOS ALAMOS NATIONAL LABORATORY ENVIRONMENTAL RESTORATION PROGRAM

SAMPLE MANAGEMENT FACILITY

FIELD BOREHOLE ANALYTICAL SAMPLE REMOVAL CHECKLIST

Recipient _____ Address _____

Organization _____ _____

Telephone ( ) _____ _____

Form Completed By _____ Date _____ Page_____of _____

Borehole ID_____ TA/OU _____/_____

UNCONTROLLED

FIELD BOREHOLE ANALYTICAL SAMPLE INFORMATION			CHECKLIST		
Field Borehole Analytical Sample Bar Code Number (SpecID)	Affixed?	Interval Removed / Date Removed	Team Marker	Marked & Tagged?	Packaged? Described?

FIELD BOREHOLE ANALYTICAL SAMPLE TRANSFER

Person Releasing Custody: _____ Person Accepting Custody: _____

Date/ Time _____ Date/ Time _____

SMF USE ONLY Checked By _____ Date _____

R1.

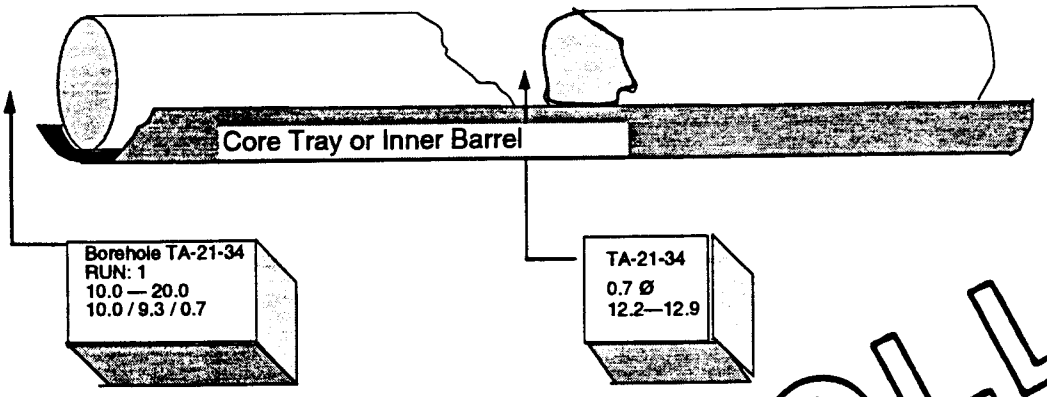

Run Marker

Lost Core Marker

Example of Marker Placement

UNCONTROLLED

Borehole ID Number
Run Number
Footage Interval
Drilled/ Recovered/ Lost

Run Marker

Borehole ID Number
Amount Lost
Core Loss Interval

Core Loss Marker

LOS ALAMOS NATIONAL LABORATORY ENVIRONMENTAL RESTORATION PROGRAM

SAMPLE MANAGEMENT FACILITY

FIELD VIDEO LOG

TA/OU _____ Borehole ID # _____ Cassette # _____ Page _____ of _____

Checked By _____ Date _____

Run #	Run Interval	Counter Interval	Remarks	Photographer	
				Initials	Date

UNCONTROLLED

LOS ALAMOS NATIONAL LABORATORY ENVIRONMENTAL RESTORATION PROGRAM

SAMPLE MANAGEMENT FACILITY

CORE SAMPLE LOG

Borehole ID_____ TA/OU _____ Drill Depth From _____ To _____ Page_____of _____

Driller _____Box #(s) _____ Start Date/Time _____ End Date/Time_____

Drilling Equip./Method _____ Sampling Equip./Method_____

Depth (Feet)	Recovery (feet per feet/ %)	Field Borehole Anaytical Sample Number	Field Screening Results	Top/Bottom of Core In Box	Lithology - Petrology - Soil	Graphic Log	Lithologic Unit	Notes

Prepared By _____ Date _____ Checked By _____ Date _____

R.1

UNCONTROLLED

UNCONTROLLED

LOS ALAMOS NATIONAL LABORATORY ENVIRONMENTAL RESTORATION PROGRAM

SAMPLE MANAGEMENT FACILITY

CORE SAMPLE LOG

Borehole ID 99-1001 TA/OU 99/1199 Drill Depth From 70.0 Ft. To 100.0 Ft. Page 3 of 9

Driller ABC Drilling Co. Box #(s) 5, 6, 7 Start Date/Time 10 JAN 94/0789 End Date/Time 15 JAN94/1445

Drilling Equip./Method CME 75/ Air Rotary Sampling Equip./Method Continuous Core/Split Barrel

Depth (Feet)	Recovery (feet per feet/ %)	Field Borehole Anaytical Sample Number	Field Screening Results	Top/Bottom of Core In Box	Lithology - Petrology - Soil	Graphic Log	Lithologic Unit	Notes
70	13 3.6/5.0	AAA-0001 70.2-70.4 Rad/Moist SPC-ID 303 AAA-0002 72.5-73.5 Geotec.	250 cpm βγ 117 cpm α	Box 5 of 18 65.5 ft to 79.0 ft	Massive, Poorly sorted, non-welded IGNIMBRITE. 20% pumice lapilli, yellowish gray (5Y 7/2), Vapor-phased altered w/ growth of sanadine xtals in pumice vesicles, sugary texture. 25% phenochrysts, quartz, minor k-spars. 7% lithics, mod.-reddish brown (10R 4/6) fragments, possibly Fe-oxides. Remainder light brownish gray (5YR 6/1) groundmass glass fragments (ash). Moderate vapor-phase altered, readily seen in pumice fragments. Groundmass is cohesive due to vapor phase alteration, and non welded.		Tshirege Member of Bandelier Tuff	Start Drilling 10 JAN 94 0800
75	14 3.3/5.0	AAA-0003 76.4-76.6 Rad/Moist AAA-0004 77.0-77.5 Radchem /Metal	300 cpm βγ 60 cpm α 77.2 ft = 420 cpm βγ		Same as Above			1012 - Air Rotary Rig Lost Air Pressure- Rig Down
80	15 4.0/5.0	AAA-0005 81.6-81.8 Rad/Moist AAA-0006 84.0-85.0 Radchem /Metal	400 cpm βγ 190 cpm α 84.0 ft = 800 cpm βγ	Box 6 of 18 79.0 ft to 92.5 ft	Same as above, except degree of welding increasing to slightly welded. 82.5 - Fracture, 0.3 ft long, clay coated, brecciated			
85	16 3.5/5.0	AAA-0007 85.3-85.5 Rad/Moist AAA-0008 86.2-86.8 Radchem /Metal SPC-ID 304 AAA-0009 88.0-88.5 Geotec.	500 cpm βγ 175 cpm α		Same as above 86.0 - Color of groundmass changes to mod. orange pink (10R 7/4) 89.0 - Degree of welding changing to nonwelded.			1200 - Lunch 1300 - Begin Drilling
90	17 2.0/5.0	AAA-0010 90.2-90.4 Rad/Moist SPC-ID 304 AAA-0011 92.5-93.5 Geotec.	510 cpm βγ 180 cpm α		Same as above 91.5 - Massive mod. well sorted, nonwelded IGNIMBRITE. 7-10% pumice lapilli, yellowish-gray (5Y 7/2), little vapor phase alteration, some sugary texture, structures well preserved. 2% phenochrysts, quartz 4% lithics Remainder mod. ORange-Pink (10R 7/4) ash. Groundmass is non-welded, non-cohesive.			
95	18 2.5/5.0	AAA-0012 95.0-95.2 Rad/Moist	490 cpm βγ 160 cpm α	Box 7 of 18 92.5 ft to 103.5 ft	Same as above			1700 - End Drilling - 10 JAN 94
100								

Prepared By J. B. Geologist Date 10 JAN 94 Checked By J. B. Supervisor Date 11 JAN 94

R.1

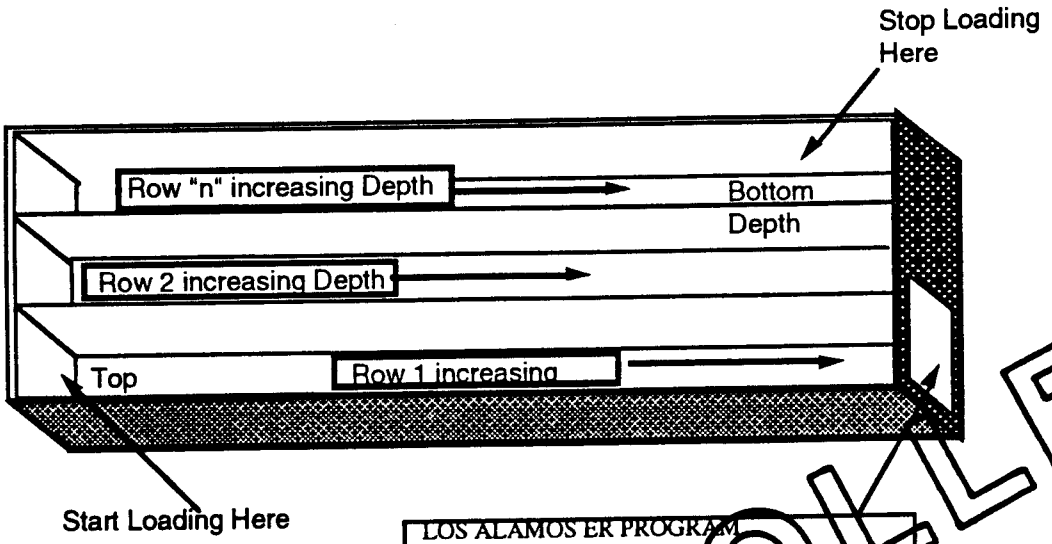

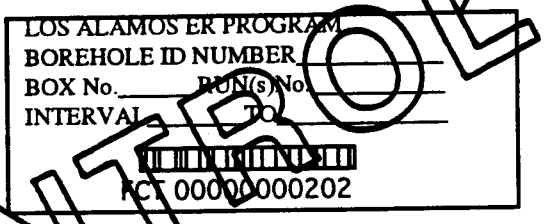

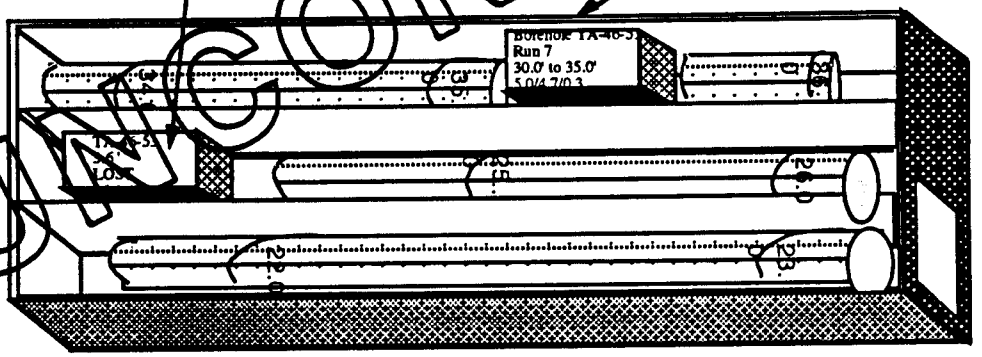

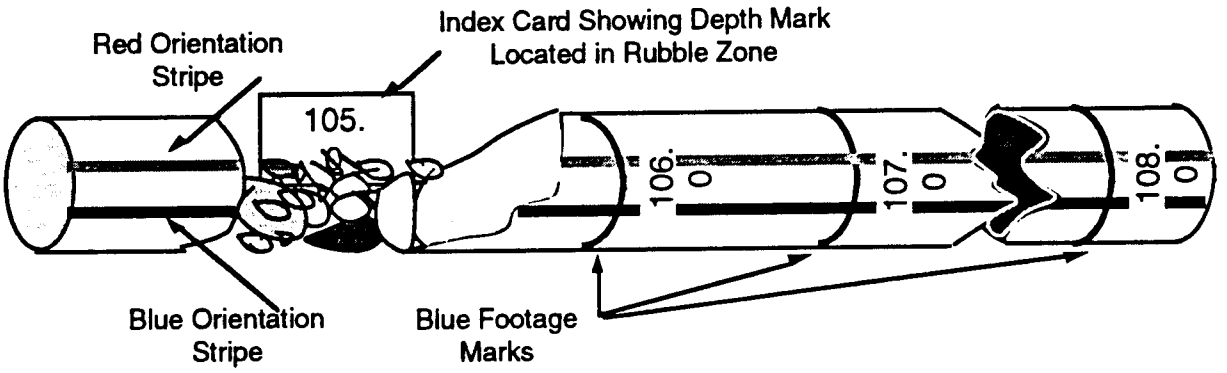

UNCONTROLLED

LOS ALAMOS NATIONAL LABORATORY ENVIRONMENTAL RESTORATION PROGRAM

SAMPLE MANAGEMENT FACILITY

FIELD PHOTOGRAPHIC LOG

TA/OU _____ Borehole ID_____ Checked By _____ Date _____ Page_____of _____

Photographed By _____ Date _____

Roll		Exposure			Run		Box		Other
No.	ASA	No.	f-stop	Speed	No.	Interval	Bar Code #	Interval	

UNCONTROLLED

LOS ALAMOS NATIONAL LABORATORY ENVIRONMENTAL RESTORATION PROGRAM

SAMPLE MANAGEMENT FACILITY

BIT CUTTINGS LOG

Borehole ID_____ Sample Type _____ From _____ To _____ Page_____of _____

By _____ Date(s) _____ Checked By _____ Date _____

TA/OU _____ Box #(s) _____ Drilling Equip._____

Depth or depth interval	Amount recovered (No. of bags collected)	Sample Splits Amount, requester, organization	Lithology	Comment

UNCONTROLLED

LOS ALAMOS NATIONAL LABORATORY ENVIRONMENTAL RESTORATION PROGRAM

SAMPLE MANAGEMENT FACILITY

FIELD SCREENING LOG

TA/OU _____ Borehole ID_____ Checked By _____ Date _____ Page_____of _____

Run		Hazard	Screening Method	Reading	Acceptance Criteria		Technician's Certification
No.	Interval				BELOW	ABOVE	

UNCONTROLLED

Los Alamos National Laboratory **Environmental Restoration Program** Standard Operating Procedure	No: LANL-ER-SOP-12.02 Rev: 1

TRANSPORTATION, RECEIPT, AND ADMITTANCE OF BOREHOLE SAMPLES FOR THE SAMPLE MANAGEMENT FACILITY

UNCONTROLLED

Prepared by	E. Dow Davidson Jr. (Print Name)	(Signature)	05-17-94 (Date)
Quality Review by	G. Thomas Farmer (Print Name)	(Signature)	5-18-94 (Date)
Technical Review by	Greg Bayhurst (Print Name)	Greg Bayhurst (Signature)	5-17-94 (Date)
PM Approval	David McInroy (Print Name)	(Signature)	20 MAY 1994 (Date)
QPPL Approval	Larry Souza (Print Name)	(Signature)	5/19/94 (Date)

Effective Date: 5/25/94

TRANSPORTATION, RECEIPT, AND ADMITTANCE OF BOREHOLE SAMPLES FOR THE SAMPLE MANAGEMENT FACILITY

Contents

1.0 PURPOSE 2

2.0 SCOPE 2
- 2.1 Applicability 2
- 2.2 Training 2

3.0 DEFINITIONS 2

4.0 BACKGROUND AND CAUTIONS 3

5.0 EQUIPMENT 3

6.0 PROCEDURE 4
- 6.1 Preparation of Samples and Documentation for Transmittal 4
- 6.2 Transport and Receipt of Samples and Documents 7
- 6.3 Assessment of Screening 8
- 6.4 Admittance of Samples and Documents to the SMF 8

7.0 REFERENCES 10

8.0 RECORDS 10

9.0 ATTACHMENTS 10

UNCONTROLLED

TRANSPORTATION, RECEIPT, AND ADMITTANCE OF BOREHOLE SAMPLES FOR THE SAMPLE MANAGEMENT FACILITY

1.0 PURPOSE

The purpose of this procedure is to facilitate the transport, handling, tracking, documentation, and admittance of borehole samples after their shipment from the drill site and their subsequent arrival at the Environmental Restoration (ER) Program Sample Management Facility (SMF). The procedure also ensures that the levels of radioactive and non-radioactive contamination in borehole samples are evaluated prior to being admitted to the SMF.

2.0 SCOPE

2.1 Applicability

This procedure applies to all SMF staff involved with the transport, receipt, and admittance of samples collected from ER Program boreholes. It is also applicable to any other ER Program personnel assisting in the activities included in this procedure.

2.2 Training

SMF staff and any other ER Program personnel performing activities within the scope of this standard operating procedure (SOP) will be trained to this procedure before conducting work, and will certify they have read and understood this procedure and the SOPs comprising general instructions (Section 1.0 of the LANL-ER-SOPs).

UNCONTROLLED

3.0 DEFINITIONS

A. Existence Code: A designator that describes the existence condition of a borehole sample.

B. Core: A core is a cylindrical section of rock, or fragment thereof, that is taken as a sample of the interval penetrated by a core bit and that is brought to the surface for examination and/or analysis.

C. Cuttings: Cuttings are chips of rock produced during drilling that are removed from the borehole by circulation of drilling fluids (gas, foam, or liquid).

D. Information Block: An information block is an object placed in a sample container. The block represents a depth interval and provides information pertaining to the status of that interval.

E. Rubble: Rubble consists of fragments of core from a single interval, the individual diameters of which average less than one half the diameter of the whole core.

F. Sample: A sample is a physical entity, representative of the whole, that is collected or generated for data, analysis, or testing.

G. Sample Management Facility: The SMF is the facility used for the documentation, storage, and control of borehole samples and specimens collected and distributed for analysis and evaluation by ER Program personnel. The SMF consists of physical facilities and equipment designed to effectively process and preserve collected borehole samples.

H. Sample Type: Sample type designates the type of material that makes up a sample, i.e., core or cuttings.

I. Specimen: A specimen is a subsection or portion that has been removed from a sample or remnant that undergoes testing, analysis, or other technical or scientific evaluation and is tracked individually. It may also be referred to as an analytical sample.

J. Unique Identifier: A unique identifier (ID) is a designation that sets a documentable object or event apart from similar entities. It may be an assigned number, a name, and alphanumeric designation, or a set of data items that collectively serve to specify an entity. Examples of unique identifiers used in this procedure include Borehole ID, Container ID, Sample ID, or Specimen ID.

4.0 BACKGROUND AND CAUTIONS

A. This procedure is limited to the activities necessary to transport borehole samples from operable unit (OU) drill sites to the SMF where they are received, have their identity confirmed, and admitted. The category of borehole samples controlled by this procedure are primarily collected for geologic and hydrologic characterization. This procedure does not address the transport of samples collected exclusively for field monitoring or laboratory analysis for hazardous wastes or radiation levels.

B. All borehole samples submitted to the ER Program SMF must be accompanied by documentation stating that the samples have undergone field or laboratory screening for radiological and non-radiological contamination. This certification of screening shall state the levels of radiological and chemical contaminants of the samples.

5.0 EQUIPMENT

Equipment necessary for this procedure will include, but is not limited to:

Transport vehicle
Core marking supplies
Measuring rulers marked in tenths of a foot

UNCONTROLLED

6.0 PROCEDURE

Introduction

Borehole samples collected and temporarily stored at OU drill sites will be transferred to the SMF for processing and storage. This procedure describes the methods necessary to ensure that samples are correctly packaged, shipped, and documented so that the samples, containers, and associated records arrive at the SMF in acceptable condition, available for processing, examination, and storage.

This procedure is also designed to minimize the occurrence of discrepancies and errors and to correct these errors before they become part of the permanent record. These errors may include; clerical and handling discrepancies occurring during transport preparation; unsuitable packaging of samples; improper or missing documentation or improper annotation of samples or containers; or errors associated with processing and storage at the SMF.

UNCONTROLLED

6.1 Preparation of Samples and Documentation for Transmittal

6.1.1 Before shipping a group of borehole sample containers from the drill site to the SMF, the field personnel maintaining custody of the samples shall complete a Field Container Summary and Transmittal Form (Transmittal Form). This form may be computer generated if the field site is so equipped (Attachment A), or a version of the form may be completed by hand (Attachment B) if no computer is available. The Transmittal Form shall contain the following information:

a. Borehole ID.

b. Number of containers included in the shipment.

c. Date of the shipment.

d. A list of the containers included in the shipment, containing the following information for each:

   i. Container ID (FCT designator).

   ii. Sample type (core, cuttings, or other sample).

   iii. Sequential container number with respect to other containers from the same borehole of the same sample type.

   iv. Depth interval (of container).

e. For each container, a list of all included depth intervals and their existence codes.

Note: Existence codes may include the following:

i. REC - A sample recovered from the borehole and included within the container.

ii. UNREC - An interval for which no samples were successfully recovered.

iii. NAT - A drilled interval during which no sample recovery was attempted.

iv. WCR - A field whole core sample (analytical sample) removed from the core before the boxing of the container interval, in accordance with LANL-ER-SOP-12.01.

v. LOST - A sample that was recovered, but is unaccounted for during container loading.

vi. DEST - A sample accidentally destroyed before loading into its container.

f. A description of the documentation supplied with the sample shipment.

Note: The cumulative sample shipments for each borehole shall include the following:

i. Field Photographic Log.

ii. Field Video Log (If applicable).

iii. Daily Drilling Summary.

iv. Field Analytical Sample Removal Checklist (Removal Checklist).

v. Core Sample Log.

vi. Field Bit Cuttings Log (If applicable).

vii. Core Videotape(If applicable).

viii. Certification of Screening Levels.

6.1.2 The field personnel maintaining custody of the samples will ensure that field and/or laboratory screening has been completed for radioactive and non-radioactive contaminant levels. Documentation stating that levels of radiological and non-radiological contaminants of the samples are within SMF health and safety based Acceptance Criteria (see Table 1) will be signed by on-site monitoring personnel. Only samples that have been certified to be within acceptable levels will be transported to the SMF.

UNCONTROLLED

TABLE 1

SMF ACCEPTANCE CRITERIA

Hazard	Acceptance Level	Method
Penetrating Radiation*	<100, 000 dpm/100 cm^2 at a distance of 1 inch from the sample material	gross beta/gamma
Radon	<3.8 pCi/L	portable radon detector
Tritium	<220, 000 pCi/ml	portable tritium monitor, or liquid scintillation counting for samples taken from tritium contaminated areas.
Beta/Gamma Contaminated Particulates*	<100, 000 dpm/100 cm^2	various methods, including direct reading instruments, swipes, and smears
Alpha Contaminated Particulates*	<1000 dpm/100 cm^2	various methods, including direct reading instruments, swipes, and smears
Volatile Organic Compounds*	<5.9 ppm total VOC	PID[1], FID[2], colorimetric indicator tubes
Metals	acceptable exposure limits[3]	EPA method SW 6010

1 Photo ionization Detector
2 Flame Ionization Detector
3 Acceptable level (ppm) = species specific occupational exposure limit (mg/m^3) /10 (mg/m^3)
* Hazards suitable for detection with field screeining instruments.

UNCONTROLLED

6.1.3 The certification will provide field readings for beta/gamma, alpha, and volatile organic compounds. Laboratory results of those hazards that can not effectively be analyzed in the field (i.e., tritium, metals, etc.) will also will be certified and provided to the SMF. Samples may be accepted for curation by the SMF If the sample's readings are below the Acceptance Criteria upper

limits. Samples will not be accepted for curation If readings are above the Acceptance Criteria limits.

6.1.4 This certification of screening levels will also establish that the samples may be shipped to the SMF in accordance with Department of Transportation regulations.

6.1.5 SMF staff will provide a vehicle for transport of borehole samples from the field to the SMF.

6.1.6 Containers will be loaded to ensure that the containers are adequately secured against displacement.

6.1.7 The SMF staff will inventory the containers and documents being loaded into the transport vehicle and check them against the Transmittal Form. When the data agree with the contents of the vehicle, the SMF Staff taking the samples from the site (SMF Courier) will sign the "Person Accepting Custody" field, and place the date and time of the transfer in the spaced provided.

6.1.8 The SMF Field Staff will inventory each container and document being loaded into the transport vehicle and check them against the Transmittal Form. They will mark the "Shipped OK" space for each container properly loaded.

6.1.9 When the data on the Transmittal Form agree with the contents of the vehicle, SMF Field Staff will sign the "Person Releasing Custody" field, and place the date and time of the transfer in the space provided.

UNCONTROLLED

6.2 Transport and Receipt of Samples and Documents

6.2.1 The SMF Courier will then transport the containers and documents to the SMF. Upon arrival of the containers and documentation the SMF courier will remove containers and documents from the vehicle and place them in an available receiving area.

6.2.2 An SMF Geotechnician will inventory containers and documents being unloaded from the transport vehicle and check them against the Transmittal Form. The Geotechnician will mark the "Received OK" space for each container properly unloaded.

6.2.3 When the data on the Transmittal Form agrees with the contents of the vehicle, the Geotechnician will sign the "Person Accepting Custody" field and place the date and time of transfer in the space provided.

6.2.4 The SMF Courier will inventory containers and documents being unloaded from the transport vehicle and check them against the Transmittal Form. When the data on the Transmittal Form agree with the contents of the

vehicle, the SMF Courier will sign the "Person Releasing Custody" field and place the date and time of the transfer in the spaces provided.

6.3 Assessment of Screening

6.3.1 Periodic resurveying of incoming sample materials will be performed. The frequency is dependent upon historical site information, field monitoring results, and analytical laboratory results. This determination will serve as a quality control check to ensure that no sample material exceeding health and safety based Acceptance Criteria are admitted for curation.

6.3.2 The SMF Curator will designate specific sample containers to be resurveyed based upon his/her evaluation of the potential contaminants of concern as listed in the relevant Resource Conservation and Recovery Act Facility Investigations Work Plan, field monitoring results, and laboratory analytical data (if any).

6.3.3 Sample materials will be monitored for hazards such as penetrating radiation, volatile organic compounds, and tritium. Techniques for sample material monitoring will be carried out in compliance with the latest revision of: 1) Los Alamos National Laboratory (the Laboratory) Radiological Control Manual (for radiation); and 2) the Laboratory Environmental, Safety, and Health Manual - Administrative Requirement 6-2 (for volatile organic compounds).

6.3.4 The results of any sample material hazard survey conducted at the SMF will be documented on the "Confirmation Checklist" (Attachment C) in the space provided for comments in addition to applicable records requirements described in the Laboratory Radiological Control Manual - Chapter 7, or the Laboratory Environmental, Safety, and Health Manual.

UNCONTROLLED

6.4 Admittance of Samples and Documents to the SMF

6.4.1 The SMF Curator will assign a group of one or more available containers to undergo the admittance portion of this procedure.

6.4.2 SMF staff will arrange containers in a work area in preparation for admittance. The SMF staff will open the lids of the containers and inspect the contents for signs of damage or disruption that may have been sustained during transport.

6.4.3 SMF staff will generate a Confirmation Checklist using data from the Transmittal Form and the Removal Checklist, containing as a minimum the following items:

a. A list of containers included in the assignment with the following data for each:

   i. Container ID.

ii. Borehole ID.

iii. Sequential container number.

iv. Sample type (core, cuttings, or other sample).

b. For each container, a list of all included sample intervals, and their existence codes.

c. Date the Confirmation Checklist was prepared.

d. For each interval, spaces for notations, corrections, and comments regarding status of samples, and a verification line for the SMF Geotechnician to initial after confirmation of sample data.

e. Signature lines for the SMF Geotechnician and Curator to document the completion of the Confirmation Checklist.

f. A page mark indicating the total number of pages in the Confirmation Checklist, and the sequence of the individual page.

6.4.4 The SMF Geotechnician will compare the information contained in the Confirmation Checklist with the contents of the containers, checking for the following conditions:

a. Container IDs should match those on container labels.

b. Existence codes should match the samples or information blocks within the indicated container.

c. All field core analytical samples documented on the information blocks in containers should have been recorded on the Removal Checklist.

d. All depths marked on samples should be consistent with those recorded on the container labels and with the intervals given on the Confirmation Checklist.

6.4.5 The SMF Geotechnician will initial each sample interval in the space provided when the information is confirmed or corrected.

6.4.6 The SMF Geotechnician will sign and date each page of the completed Confirmation Checklist in the spaces provided and submit it to the Curator. The SMF Geotechnician will also submit the Transmittal Form and the Removal Checklist to the Curator or designee.

6.4.7 The SMF Geotechnician will submit remaining documents received to the Administrative Secretary.

UNCONTROLLED

6.4.8 The Curator or designee verifies that the Confirmation Checklist, Removal Checklist, and Transmittal Form are completely and correctly filled out. The Curator or designee will sign and date each page in the spaces provided and submit them to the Administrative Secretary.

6.4.9 The Administrative Assistant will photocopy, compile, and submit records generated or received under this procedure to the ER Records Processing Facility according to the procedure for the Laboratory ER Records Management (LANL-ER-AP-02.1).

6.4.10 Upon the completion of the admittance process containers of samples will be stored under chain of custody control at the SMF until processing or examination is necessary.

UNCONTROLLED

7.0 REFERENCES

LANL-ER-QPP, Quality Program Plan for Environmental Restoration Activities
LANL-ER-SOP-1.01, General Instructions for Field Investigations
LANL-ER-SOP-1.02, Sample Containers and Preservation
LANL-ER-SOP-1.03, Handling, Packaging, and Shipping of Samples
LANL-ER-SOP-1.04, Sample Control and Field Documentation
LANL-ER-SOP-4.01, Drilling Methods and Drill Site Management
LANL-ER-SOP-12.01, Field Logging, Handling, and Documentation of Borehole Materials

"Branch Technical Procedure: Transport, Receipt, Admittance, and Processing of Borehole Samples for the SMF," 1989, Yucca Mountain Project Office, Las Vegas, NV

ER Program Sample Management Facility Contaminant Criteria for the Acceptance of Samples, February 8, 1994

8.0 RECORDS

Field Container Summary and Transmittal Form

Confirmation Checklist

The SMF Administrative Secretary is ultimately responsible for the transfer of these records to the ER Records Processing Facility in accordance with the procedure for the Laboratory ER Records Management (LANL-ER-AP-02.1).

9.0 ATTACHMENTS

Attachment A - Field Container Summary and Transmittal Form (Data Base Generated version)
Attachment B - Field Container Summary and Transmittal Form (Non-computer generated version)
Attachment C - Confirmation Checklist (NOTE: Data Base Generated)

Los Alamos National Laboratory Environmental Restoration Program
SAMPLE MANAGEMENT FACILITY FIELD CONTAINER SUMMARY TRANSMITTAL FORM

Page ____ of ____

BOREHOLE ID:

SAMPLE CONTAINER TOTAL:_____

EXISTENCE CODES
REC - A sample recovered from the borehole and included within the container
UNREC - An interval for which no samples were successfully recovered
NAT - A drilled interval during which no sample recovery was attempted
SPC_Fld - A field specimen (analytical sample) removed from the core before the boxing of the container interval
LOST - A sample that was recovered, but is unaccounted for during container loading
DEST - A sample accidentally destroyed before loading into its container

DOCUMENTATION	ARRIVED AT SMF ?

FIELD SITE TO TRANSPORT	
PERSON ACCEPTING CUSTODY	DATE AND TIME
PERSON RELEASING CUSTODY	DATE AND TIME
TRANSPORT TO SMF	
PERSON ACCEPTING CUSTODY	DATE AND TIME
PERSON RELEASING CUSTODY	DATE AND TIME

FCT Number	BOX INTERVAL TOP	BOX INTERVAL BOTTOM	SEQUENTIAL BOX NUMBER	SAMPLE TYPE	SHIPPED OK	RECEIVED OK	SAMPLE INTERVALS TOP	SAMPLE INTERVALS BOTTOM	SAMPLE INTERVALS EXISTENCE

UNCONTROLLED

For SMF Use

Checked By:_____ **Date:**_____

LOS ALAMOS NATIONAL LABORATORY ENVIRONMENTAL RESTORATION PROGRAM | Page __ of __

SAMPLE MANAGEMENT FACILITY | **FIELD CONTAINER SUMMARY AND TRANSMITTAL FORM**

UNCONTROLLED

Field Site to Transport		Transport to SMF		
Person Releasing Custody	Date & Time	Person Releasing Custody		Date & Time
Person Accepting Custody	Date & Time	Person Accepting Custody		Date & Time
Checked By	Date & Time	Borehole ID	TA/OU	Shipment Container Total

Documentation	Received at SMF

Sample Type	FCT Bar Code Number	Existance Code	Container or Sample Interval	Rec'd 4

Sample Type	FCT Bar Code Number	Existance Code	Container or Sample Interval	Rec'd 4

SAMPLE EXISTANCE CODES: REC: Recovered UNREC: Unrecovered NAT: Not Attempted WCR: Whole Core Removed LOST: Lost DEST: Destroyed

Los Alamos National Laboratory Environmental Restoration Program
SAMPLE MANAGEMENT FACILITY CONFIRMATION CHECKLIST

Box ID	Of	Borehole			Top	Bottom	Sample Type	Box Number
		Sample ID	Top	Bottom	Existence			Comments/Corrections
300671		053			0.0	16.0	Core	001
		000002	0.0	10.0	NAT			
		000003	10.0	16.0	REC			Geotechnician
300672		053			16.0	22.0	Core	002
		000004	16.0	22.0	REC			
300673		053			22.0	28.0	Core	003
		000005	22.0	28.0	REC			
300674		053			28.0	200.0	Core	004
		000006	28.0	32.0	REC			Curator
		000007	32.0	200.0	NAT			
300675		053			200.0	205.9	Core	005
		000008	200.0	205.9	REC			
300676		053			205.9	211.9	Core	006
		000009	205.9	211.9	REC			
300677		053			211.9	221.0	Core	007
		000010	211.9	216.0	REC			
		000011	216.0	218.0	WCR			
		000012	218.0	219.8	REC			
		000013	219.8	221.0	WCR			
300678		053			221.0	227.0	Core	008
		000014	221.0	227.0	REC			
300679		053			227.0	233.0	Core	009
		000015	227.0	233.0	REC			
300680		053			233.0	350.2	Core	010
		000016	233.0	238.7	REC			
		000017	238.7	350.2	UNREC			

UNCONTROLLED

Los Alamos National Laboratory **Environmental Restoration Program** Standard Operating Procedure	No: LANL-ER-SOP-12.03 Rev: 0

ACCEPTANCE OF NON-BOREHOLE SAMPLES BY THE SAMPLE MANAGEMENT FACILITY

UNCONTROLLED

Prepared by	E. Dow Davidson, Jr. (Print Name)	(Signature)	05-17-94 (Date)
Quality Review by	G. Thomas Farmer (Print Name)	(Signature)	5-18-94 (Date)
Technical Review by	Greg Bayhurst (Print Name)	(Signature)	5-17-94 (Date)
PM Approval	David McInroy (Print Name)	(Signature)	20 MAY 94 (Date)
QPPL Approval	Larry Souza (Print Name)	(Signature)	5/19/94 (Date)

Effective Date: 5/25/94

ACCEPTANCE OF NON-BOREHOLE SAMPLES BY THE SAMPLE MANAGEMENT FACILITY

Contents

1.0 PURPOSE 2

2.0 SCOPE 2
- 2.1 Applicability 2
- 2.2 Training 2

3.0 DEFINITIONS 2
- 3.1 Sample Management Organization 2
- 3.2 Sample Management Facility 2
- 3.3 Sample 3
- 3.4 Collector 3

4.0 BACKGROUND AND CAUTIONS 3

5.0 EQUIPMENT 3

6.0 PROCEDURES 3
- 6.1 Responsibilities for Curation of ER Project Samples and Documents 3
- 6.2 Acceptance for Curation of Samples and Documents 3
- 6.3 Transfer of Custody of Samples 4
- 6.4 FIMAD Unique Sample Number 5
- 6.5 Containerization and Labeling of Samples 5
- 6.6 Sample Storage 5
- 6.7 Verification 6
- 6.8 Records Storage 6

7.0 REFERENCES 6

8.0 RECORDS 6

9.0 ATTACHMENTS 6

UNCONTROLLED

ACCEPTANCE OF NON-BOREHOLE SAMPLES BY THE SAMPLE MANAGEMENT FACILITY

1.0 PURPOSE

This procedure provides instructions for the acceptance of non-borehole samples by the Environmental Restoration (ER) Program Sample Management Facility (SMF). The implementation of this procedure ensures that non-borehole samples will be correctly identified and documented upon acceptance for curation by the SMF.

2.0 SCOPE

This procedure includes activities required to accept non-borehole samples for curation at the SMF. Only samples collected in support of the Los Alamos National Laboratory (the Laboratory) ER Program's Resource Conservation and Recovery Act (RCRA) Field Investigation (RFI) are within the scope of the procedure.

2.1 Applicability

This procedure applies to Sample Management Organization (SMO) staff performing functions related to acceptance of selected non-borehole samples at the SMF for curation.

2.2 Training

SMF staff will be trained to this procedure before conducting work, and will document they have read and understand this procedure.

UNCONTROLLED

3.0 DEFINITIONS

3.1 Sample Management Organization

SMO is the organization responsible for the collection, documentation, storage, and control of selected samples, and records collected and distributed for analysis and evaluation. SMO includes the SMF and Field Operations. SMO staff consists of management and operations personnel who ensure that SMO operations and documentation satisfy applicable regulatory requirements. SMO is operated by the ER Program Subsurface Technologies Technical Team.

3.2 Sample Management Facility

The SMF is the facility (Building TA-3-271) used for the documentation, examination, physical processing, storage, and control of selected samples, remnants, and records collected and distributed for the ER Program. The SMF consists of a physical facility and equipment designed to effectively process and preserve these samples, remnants, and records.

3.3 Sample

Sample: A sample is a physical entity, collected in the field, representative of the whole, that is the original source material for all subsequent analyses and testing activities.

3.4 Collector

A Collector is an Operable Unit worker or other ER Program representative who submits samples or documents to the SMF for curation.

4.0 BACKGROUND AND CAUTIONS

N/A

5.0 EQUIPMENT

N/A

6.0 PROCEDURES

6.1 Responsibilities for Curation of ER Project Samples and Documents

Various types of samples will be collected and documents generated in support of the ER program RFI at the Laboratory. Borehole samples will normally be curated by the SMF because of the expense and difficulty of redrilling and collecting samples. Because non-borehole samples normally represent much lower recollection costs these samples may be stored and managed by individual collectors. However, non-borehole samples may be submitted to the SMF for acceptance and curation.

6.2 Acceptance for Curation of Samples and Documents

After collection of samples intended for use for the ER Program, a Collector shall submit a completed Sample Collection Report (Attachment A) with all samples collected and/or submitted to the SMF for curation. This report shall be completed prior to submission of the samples to the SMF. In addition, the Collector shall submit a document that establishes the levels of radiological and non-radiological contaminants for each sample being considered for acceptance by the SMF. The document will provide readings for beta/gamma, alpha, and volatile organic compounds. This documentary evidence will provide field screening or laboratory levels that may be compared to SMF health and safety based Acceptance Criteria. Samples may be accepted for curation by the SMF If the sample's readings are below the Acceptance Criteria. Samples will not be accepted for curation If readings are above the Acceptance Criteria. Acceptance Criteria are listed in

UNCONTROLLED

Table 1. Those hazards that can be evaluated by means of field screening instruments are indicated.

TABLE 1

SMF ACCEPTANCE CRITERIA

Hazard	Acceptance Level	Method
Penetrating Radiation*	<100, 000 dpm/100 cm^2 at a distance of 1 inch from the sample material	gross beta/gamma
Radon	<3.8 pCi/L	portable radon detector
Tritium	<220, 000 pCi/ml	portable tritium monitor, or liquid scintillation counting for samples taken from tritium contaminated areas.
Beta/Gamma Contaminated Particulates*	<100, 000 dpm/100 cm^2	various methods, including direct reading instruments, swipes, and smears
Alpha Contaminated Particulates*	<1000 dpm/100 cm^2	various methods, including direct reading instruments, swipes, and smears
Volatile Organic Compounds*	<5.9 ppm total VOC	PID[1], FID[2], colorimetric indicator tubes
Metals	acceptable exposure limits[3]	EPA method SW 6010

1 Photo ionization Detector
2 Flame Ionization Detector
3 Acceptable level (ppm) = species specific occupational exposure limit (mg/m^3) /10 (mg/m^3)
* Hazards suitable for detection with field screeining instruments.

UNCONTROLLED

6.3 Transfer of Custody of Samples

Upon arrival at the SMF, the Collector will register at the Reception Area. Sampl or sample containers will not be brought into the SMF until SMF staff have

determined that the Collector's screening documentation establishes that the contamination levels of the samples are below SMF Acceptance Criteria. If samples are cleared for acceptance they may be unloaded and placed in the Sample Storage Area or other appropriate area. Additional screening may be performed at the SMF.

SMF staff will determine if the following information is completed on each Sample Collection Report: the date sample was collected, and person releasing custody and organization. Other information should include sample type; type of field site; collection location; sample weight, volume or dimensions; and the Facility for Information Management And Display (FIMAD) unique sample number (if available); storage requirements; and verification that the sample meets SMF Acceptance Criteria.

SMF staff will determine if all SMF bar code labels have been properly applied to the sample (if possible), inside the sample container, on the outside of the sample container, and on the Sample Collection Report. If a photograph of the sample at its acquisition site is submitted with the sample, a bar code label should appear on the back of the photograph.

When the sample and Sample Collection Report are submitted to the SMF, the Collector and the SMF staff member completing the custody change will sign and date the Sample Collection Report. A copy of the report will be given to the Collector.

UNCONTROLLED

6.4 FIMAD Unique Sample Number

The FIMAD system documents provenience for samples. If the FIMAD unique sample number is available only the name of the Collector and the FIMAD unique sample number is required to be provided by the Collector on the Sample Collection Report. The Person Releasing Custody field must be completed.

6.5 Containerization and Labeling of Samples

The sample will be placed in an appropriate container, depending upon the type of sample. Information from the Sample Collection Report will be used to generate container labels for the sample and will contain the SMF bar code number, FIMAD unique sample number (if available), sample type, collection location, Collector, date of collection, date of receipt by the SMF, and date of storage. These labels will then be affixed to the appropriate sample containers. The container will be sealed according to the specifications of the Collector.

6.6 Sample Storage

The container will be assigned a storage location (e.g., storage racks, shelves), depending upon the type of storage container and appropriate environmental conditions (e.g., shelf life, temperature) designated by the Collector. Storage location and date and time of storage will be recorded on the Sample Collection

Report. If samples are not placed in permanent storage immediately, they will be placed in a designated temporary storage area maintained at required environmental conditions.

6.7 Verification

After completion of the Sample Collection Report, an SMF staff member will verify that the report has been properly completed by signing and dating the form. This signature also indicates the SMF staff member who received and verified the Sample Collection Report if no sample was submitted with the report.

6.8 Records Storage

All documents and records submitted to the SMF for curation will be submitted to the RPF. Working copies will be retained in the SMF Documents File. Access to these documents and records will be obtained through authorization by the Curator.

7.0 REFERENCES

LANL-ER-QPP, Quality Program Plan for Environmental Restoration Activities
LANL-ER-SOP-12.01, Field Logging, Handling, and Documentation of Borehole Materials
LANL-ER-SOP-12.02, Transportation, Receipt, and Admittance of Borehole Samples for the SMF

"Branch Technical Procedure: Sample Management for the Yucca Mountain Project Office," 1989, Yucca Mountain Project Office, Las Vegas, NV

8.0 RECORDS

Sample Collection Report

The Sample Management Facility is ultimately responsible for transfer of these records to the ER Records Processing Facility in accordance with the procedure for the Laboratory's ER Records Management (LANL-ER-AP-02.1)

9.0 ATTACHMENTS

Attachment A - Sample Collection Report

UNCONTROLLED

LOS ALAMOS NATIONAL LABORATORY ENVIRONMENTAL RESTORATION PROGRAM

SAMPLE MANAGEMENT FACILITY

SAMPLE COLLECTION REPORT

SMF BAR CODE		FIMAD No.	Collectors No.	Sample Type	*SMF ONLY* *Meets AC?*
Storage Requirements	Sample weight, volume, etc.	Collection Location	Type of Site	Date Sample Collected	*Assigned Storage*

SMF BAR CODE		FIMAD No.	Collectors No.	Sample Type	*SMF ONLY* *Meets AC?*
Storage Requirements	Sample weight, volume, etc.	Collection Location	Type of Site	Date Sample Collected	*Assigned Storage*

SMF BAR CODE		FIMAD No.	Collectors No.	Sample Type	*SMF ONLY* *Meets AC?*
Storage Requirements	Sample weight, volume, etc.	Collection Location	Type of Site	Date Sample Collected	*Assigned Storage*

SMF BAR CODE		FIMAD No.	Collectors No.	Sample Type	*SMF ONLY* *Meets AC?*
Storage Requirements	Sample weight, volume, etc.	Collection Location	Type of Site	Date Sample Collected	*Assigned Storage*

SMF BAR CODE		FIMAD No.	Collectors No.	Sample Type	*SMF ONLY* *Meets AC?*
Storage Requirements	Sample weight, volume, etc.	Collection Location	Type of Site	Date Sample Collected	*Assigned Storage*

Person Releasing Custody	Date	Total Samples On This Page: _____
		Date Entered in DB: _____
Person Accepting Custody	Date	Verified By

UNCONTROLLED

Los Alamos National Laboratory **Environmental Restoration Program** Standard Operating Procedure	No: LANL-ER-SOP-12.04 Rev: 1

PHYSICAL PROCESSING AND STORAGE OF BOREHOLE SAMPLES AT THE SAMPLE MANAGEMENT FACILITY

UNCONTROLLED

Prepared by	Dow Davidson (Print Name)	(Signature)	15 DEC 1994 (Date)
Quality Review by	Dave Bradbury (Print Name)	(Signature)	1/18/95 (Date)
Technical Review by	Greg Baynhurst (Print Name)	(Signature)	12-20-94 (Date)
PM Approval	Jorg Jansen (Print Name)	(Signature)	3-3-95 (Date)
QPPL Approval	Larry Souza (Print Name)	(Signature)	3/3/95 (Date)

Effective Date: 3/10/95

PHYSICAL PROCESSING AND STORAGE OF BOREHOLE SAMPLES AT THE SAMPLE MANAGEMENT FACILITY

Contents

1.0 PURPOSE 2

2.0 SCOPE 2
- 2.1 Applicability 2
- 2.2 Training 2

3.0 DEFINITIONS 2

4.0 BACKGROUND AND CAUTIONS 3

5.0 EQUIPMENT 4

6.0 PROCEDURE 4
- 6.1 Core Processing Documentation 4
- 6.2 Container Preparation and Core Marking 5
- 6.3 Core Slabbing and Bagging of Rubble 6
- 6.4 Final Slabbed Core Marking 6
- 6.5 Core Photography 6
- 6.6 Bagging of Core 7
- 6.7 Cuttings Processing 7
- 6.8 Sample Storage 8
- 6.9 Radiologically Contaminated Sample Handling and Storage 8

7.0 REFERENCES 9

8.0 RECORDS 10

9.0 ATTACHMENTS 10

UNCONTROLLED

PHYSICAL PROCESSING AND STORAGE OF BOREHOLE SAMPLES AT THE SAMPLE MANAGEMENT FACILITY

1.0 PURPOSE

The purpose of this procedure is to facilitate the physical processing and storage of borehole samples at the Environmental Restoration (ER) Project Sample Management Facility (SMF).

2.0 SCOPE

2.1 Applicability

This procedure applies to all SMF staff performing physical processing and storage of samples collected from ER Project boreholes.

2.2 Training

SMF staff and any other ER Project personnel performing activities within the scope of this standard operating procedure (SOP) must be trained to this procedure before conducting work, and must certify they have read and understood this procedure and the SOPs comprising general instructions (Section 1.0 of the LANL-ER-SOPs).

UNCONTROLLED

3.0 DEFINITIONS

A. Analytical Sample: An analytical sample is a subsection or portion which has been removed from a sample that undergoes testing, analysis, or other technical or scientific evaluation. It is also referred to as a specimen.

B. Archival-Research Borehole Sample Processing System: The archival-research borehole sample processing system of sample curation is based upon splitting a representative sample of core or cuttings from the total collected sample, one of which is preserved as an archive (archival split), the other of which is available for research and analysis (research split).

C. Core: A core is a cylindrical section of rock, or fragment thereof, that is taken as a sample of the interval penetrated by a core bit and that is brought to the surface for examination and/or analysis.

D. Curatorial Sample Inventory and Tracking System: The Curatorial Sample Inventory and Tracking System (MacCSITS) is the Macintosh based computer data base that has been developed to track in detail all actions taken on ER Project samples over which the SMF has control. The primary objective of MacCSITS is to assist in establishing and maintaining traceable records of each sample collected for the ER Project. The MacCSITS user's manuals and other related documents will be available to users.

E. Cuttings: Cuttings are chips of rock produced during drilling that are removed from the borehole by circulation of drilling fluids (gas, foam, or liquid).

F. Existence Code: A designator that describes the existence condition of a borehole sample.

G. CPM: Counts per minute.

H. Information Block: An information block is an object placed in a sample container. The block represents a depth interval and provides information pertaining to the status of that interval.

I. Rubble: Rubble consists of fragments of core from a single interval, the individual diameters of which average less than one half the diameter of the whole core.

J. Sample Management Facility: The SMF is the facility used for the documentation, storage, and control of borehole samples and specimens collected and distributed for analysis and evaluation by ER Project personnel. The SMF consists of physical facilities and equipment designed to effectively process and preserve collected borehole samples.

K. Sample Type: Sample type designates the type of material that makes up a sample, i.e., core or cuttings.

L. Sample: A sample is a physical entity, representative of the whole, that is collected or generated for data, analysis, or testing.

M. Specimen: A specimen is a subsection or portion that has been removed from a sample or remnant that undergoes testing, analysis, or other technical or scientific evaluation and is tracked individually. It may also be referred to as an analytical sample.

N. Unique Identifier: A unique identifier (ID) is a designation that sets a documentable object or event apart from similar entities. It may be an assigned number, a name and alphanumeric designation, or a set of data items that collectively serve to specify an entity. Examples of unique identifiers used in this procedure include Borehole ID, Container ID, Sample ID, or Specimen ID.

O. Whole Core Specimen: A whole core specimen is a subsection of whole core that constitutes the entire core sample recovered for the depth interval represented.

4.0 BACKGROUND AND CAUTIONS

A. The implementation of LANL-ER-SOP-12.02 will ensure that a determination is made as to the levels of radioactive and non-radioactive hazards associated with samples accepted by the SMF. This determination must be made prior to the use of this sample processing procedure. The user of this procedure is responsible for verifying that contamination levels in relation to the SMF Acceptance Criteria have been made for each sample prior to physical processing.

If sample contamination levels are **at** natural background but below the upper limits of the SMF Acceptance Criteria the following handling precautions must be taken:

UNCONTROLLED

1. Laboratory coats and plastic or rubber gloves must be worn while manipulating exposed sample material.

2. Eating or drinking must be prohibited in areas where these samples are open to the environment.

If sample radioactive contamination levels are **above** background levels, handling precautions described in Section 6.9, Handling Radioactive Samples must be followed.

5.0 EQUIPMENT

Equipment necessary for this procedure may include, but is not limited to:

Core boxes and dividers
Core marking supplies
Measuring rulers marked in tenths of a foot
Pneumatic staple guns
Polyethylene lay-flat tubing
Polystyrene core cradles
Work tables equipped with casters

UNCONTROLLED

6.0 PROCEDURE

Introduction

Borehole samples received from ER Project field sites shall be processed after arrival at the SMF and completion of confirmation and verification (LANL-ER-SOP-12.02). The purposes of processing these samples are: (1) to ensure proper identification and maintain traceability on these samples, and (2) to photo-document core. In addition to the purposes for processing, core greater than 3" diameter and cuttings optionally will be divided: (1) to prepare an archival split for future reference, and (2) to prepare a research split for data-gathering activities. Samples will undergo different phases of processing, depending upon the condition of the sample and the analytical data to be derived. At the discretion of the Curator, core greater than 3" diameter may be left whole for analytical purposes or because it is too unconsolidated for slabbing. An archival split may be cut from whole core or separated from cuttings (if cuttings have been collected and submitted to the SMF). The research split of core shall be photographed and placed in the appropriate storage location. At the discretion of the Curator, the archival split may be photographed in addition to or instead of the research split.

6.1 Core Processing Documentation

6.1.1 Information from MacCSITS will be used to generate one Core Processing Checklist (Attachment A) per box to document the various steps in the processing of whole core. The Core Processing Checklist must have as a minimum; the container ID, the borehole ID, container depth interval, a list containing the depth interval and existence code of each sample within the container, and a list of specific steps for processing the core, with a space for checking the completion of each.

6.2.2 Additionally the Checklist will have a space for including any special processing instructions that may apply to a specific container. The Checklist will have spaces for recording the permanent storage location assignment for the container and signature and date spaces to document the completion of core processing. During processing, the Core Processing Checklist will be stored in a document cache mounted inside the lid of each box. Core that measures less than 3" diameter will not be slabbed. Individual steps in the Core Processing Checklist that do not apply to small bore core or core that is not being slabbed must be marked "N/A" during core processing. The Core Processing Checklist must be verified and signed off in the space provided by Curatorial Staff upon the completion of the form.

6.2 Container Preparation and Core Marking

6.2.1 Core that is not to be slabbed remains in the same box in which it was received from the field (unless the container has been damaged). Information from MacCSITS is used to generate five labels for each box, including container ID, borehole ID, depth interval, sequential container number and type of sample, i.e., core. Labels are affixed to both ends of the container base and lid, and on one side of the container lid.

6.2.2 The whole core is removed from the field core box and placed one row at a time in core trays fastened to a work table. The interior of each box is marked at the top and bottom of each row to indicate the total depth interval represented in that row (i.e., core, unrecovered core, whole core specimens removed, etc.). For slabbed core both the archival and research core box interiors are marked.

6.2.3 Core that is to be slabbed requires another box of the same size to be constructed with polystyrene cradles. Polystyrene core existence and whole core specimen blocks are placed in the research split box at the appropriate positions, and duplicates made and placed in the archival split box.

6.2.4 Labels for these blocks are generated using information in MacCSITS just as with non-slabbed core. After the core from a field box has been slabbed, the field box will hold the research split of core and the newly constructed box will hold the archival split of core. After all the core (excluding whole core specimens) from a borehole has been slabbed and boxed, a sequential box number will be marked on the box (i.e., Box 3 of 45).

6.2.5 For core not being slabbed ensure that the field markings are complete, clear and unobscured; redraw them as necessary using the process described in ER-SOP-12.01. On core that is to be slabbed, a second set of permanent orientation stripes must be placed 180° from the existing orientation stripes on the core. The blue footage indicator is extended with a permanent marker to completely circumscribe the core. Depth indicators are permanently marked in blue and appropriately located on both sides of the core (Attachment B).

UNCONTROLLED

6.3 Core Slabbing and Bagging of Rubble

6.3.1 For core that is to be slabbed, approximately 3 ft of whole core (3" diameter or larger) from the work table is placed in the core sawing jig with the top end to the operator's left and the original field orientation stripes facing outward toward the saw operator. The core shall be slabbed longitudinally into the approximately 1/3 archival split and 2/3 research split, each portion containing identical markings. The core is slabbed with a diamond saw blade. Cores are slabbed using water as the coolant-lubricant, or with a special dry-cutting sawblade. When the dry-cutting sawblade is used, a dust collection system is used to control air quality within the saw room.

6.3.2 Rubble from core not being slabbed is bagged in polyethylene lay-flat tubing and sealed with a heat sealer, but not split into archival and research portions. Each bag must be marked with orientation marks and depth indicators and placed in its respective box, row, and position.

6.3.3 Rubble from a core that is being slabbed is removed from the field transport bag and laid out on the work table. An approximate 1/3 - 2/3 diameter longitudinal split is made on the rubble sample. Each split must be rebagged separately in polyethylene lay-flat tubing and heat sealed, with a minimal amount of disturbance to the sample.

6.4 Final Slabbed Core Marking

6.4.1 After slabbing, the research split of core must be removed from the saw jig first, the archival split afterwards. Both splits of core are laid out in the Core Processing Area, with the 1/3 and 2/3 splits placed face down, parallel to each other, and oriented correctly. Any markings that may have been obscured during slabbing shall be verified using the sample information section of the Core Processing Checklist (Attachment A) before being redrawn. The core is then be placed in its respective box, row and position.

6.5 Core Photography

6.5.1 The core, whether newly slabbed (3" diameter or larger) or whole, shall be photographed to record its initial condition, position in the box, orientation, and color. The Core Photography Log (Attachment C), is used to document photography of the core, and includes borehole ID, photographer's name, film speed and f-stop, and date. Information on each exposure must include the following: exposure number, research (RCT) or archive (ACT) bar code number, box interval, and remarks. The SMF Geotechnician completes this log as the photographs are taken and initials and dates the action. The Log is signed and dated by Curatorial staff after its completion to signify verification of the Log.

6.5.2 The core and labeling cards must be arranged as shown in Attachment D. Ensure all core markings, information blocks, and significant features are visible and in focus. If authorized by the Curator, moisten the core with a distilled water spray to enhance the contrast of the core's color and textures.

UNCONTROLLED

After each exposure recheck the focus and core placement to ensure correct alignment and legibility. Upon completion of the exposure the SMF Geotechnician will replace the box lid, and remove the box from the photo stand. A minimum of two set of prints shall be maintained, one by the SMF and one by the Records Processing Facility (RPF).

6.6 Bagging of Core

6.6.1 If bagging of the processed core is deemed necessary by the Curator, it must be sealed in polyethylene lay-flat tubing as soon as it has been marked and labeled. Lengths of lay-flat tubing are cut for each core interval. One end of each length is sealed with a heat sealer. One side of the tubing is marked with the top and bottom depths of the core interval near the ends. Orientation marks, red on the right and blue on the left (Attachment E), are drawn on the plastic bag. The approximately 3 foot section of core is laid on a contoured polystyrene cradle. The core and polystyrene cradle are then inserted into the premarked lay-flat tubing, the excess air are squeezed out, and the end of the tubing heat sealed. The sealed section of core is placed in a protective cardboard divider pad and positioned in the box. This process must be repeated for the other row in the box.

6.6.2 Upon the completion of Core Processing, containers must be sealed with filament tape and prepared for storage.

6.7 Cuttings Processing

6.7.1 Following confirmation of samples at the SMF (LANL-ER-SOP-12.02), cuttings are divided into archival and research splits, packaged, and stored. A Cuttings Processing Checklist (Attachment F) is used to document the various steps in processing the cuttings samples. The Checklist contains the borehole ID, container ID and interval, sample ID and interval of each bag, and a checklist delineating each stage of processing (i.e., split, labeled).

6.7.2 At the discretion of the Curator an archival split can be taken from each cuttings sample received at the SMF. Cuttings are split using a riffle-type sample splitter. The amount of sample taken for the archival split shall be up to 50 percent of the entire cuttings sample, not to exceed 50 grams. The archival cuttings sample is then placed into a pre-labeled plastic vial with screw caps. Each vial will have a label affixed denoting borehole ID, sample interval, and ACT bar code number of that sample. The plastic vial will be kept in a storage box containing other archival cuttings samples within the storage box sample range.

6.7.3 The research cuttings sample split, which will not exceed 200 grams, are kept in plastic vials with screw caps. Each vial will have a label affixed denoting borehole ID, sample interval, and RCT bar code number of that sample. Investigators requiring amounts of cuttings greater than 200 grams shall collect them at the borehole site and then submit a Sample Collection Report (LANL-ER-SOP-12.03) to the SMF.

UNCONTROLLED

6.7.4 Vials containing the research and archival splits of cuttings are stored in separate boxes. The borehole ID, container interval, RCT or ACT bar code number (if applicable), and missing footage within that container (if applicable) are entered into MacCSITS. Four permanent label types are generated using information contained in MacCSITS with the aforementioned information contained on them. Boxes are sealed with filament tape.

6.8 Sample Storage

6.8.1 A Borehole Sample Container Storage Location Log (Attachment C) is generated using the information in MacCSITS and includes the container ID, borehole ID, box number, container depth interval, sample type, the storage location, the name of the person storing the container, and the date the container was shelved. The storage areas shall be access-limited.

6.8.2 The 1/3 and 2/3 diameter splits of the processed core, as well as non-slabbed core, are shelved separately by acquisition site and location ID system in the sample storage area (Room 110, Building 271).

6.8.3 Both the archival and research cuttings sample splits are stored in the sample storage area in Room 110, Building 271.

6.9 Radiologically Contaminated Sample Handling and Storage

6.9.1 All radiologically contaminated core is stored and handled in a designated area that is segregated from other core storage and handling areas. This designated area is posted as a "Controlled Area", "Radioactive Material Management Area". Non-contaminated core will not be allowed in this area. This area is separated by fencing from other storage areas and is maintained under strict chain of custody protocols (locked at all times when not in use).

6.9.2 Radiologically contaminated core is received and transferred through a single designated entrance located next to the Controlled Area. This entrance is used exclusively for radiologically contaminated core and all other non-contaminated core is not allowed through this entrance.

6.9.3 Core that is below the Action Levels listed below may be handled, processed, and examined with the following precautions: (1) Personnel dosimetry (as appropriate) and Radiological Worker II training shall be required for work in this area. (2) Laboratory coats, shoe covers, and plastic or rubber gloves must be worn. Gloves should be secured at the wrist as necessary. (3) Eye and face protection must be worn, as appropriate, as specified in AR 12-1, "Personal Protective Equipment." (4) Workers should periodically monitor their hands during work. (5) Upon completion of work or prior to leaving the area, workers shall monitor those areas of their bodies that are potentially contaminated. At a minimum, this includes hands, arms, and front portions of the body. Workers should perform a whole body frisk. (6) Eating, chewing or drinking will be prohibited in the Controlled Area.

UNCONTROLLED

(7) Handling, processing and examination of sample materials will be kept to a minimum.

Action Levels

Beta/gamma	5,000 cpm/probe area
Alpha	250 cpm
Tritium	50,000 pCi/ml

6.9.4 Handling, processing, and examination of core that is above the Action Levels requires approval from the Curator and a special Radiological Work Permit (RWP). The RWP is issued and approved by Group ESH-1. The RWP designates type of personal protective clothing and other precautions as necessary. It may be necessary to limit manipulation of this core to storage only and will be decided on a case by case basis.

6.9.4 When radiologically contaminated core is handled, the radiological contaminated core storage (Controlled Area) cage is surveyed by ESH-1 on a weekly frequency (minimum). The entire storage area is surveyed on a monthly frequency. Surveys will include alpha and beta/gamma removable contamination and dose rates. A special air test is run on a weekly frequency.

6.9.5 All core boxes must be marked in accordance with Section 412, Radioactive Material Labeling of the Los Alamos National Laboratory (the Laboratory) Radiological Control Manual.

UNCONTROLLED

7.0 REFERENCES

ES&H Administrative Requirements (AR) Manual, AR 12-1, "Personal Protective Equipment"

LANL-ER-SOP-12.01, Field Logging, Handling, and Documentation of Borehole Materials

LANL-ER-SOP-12.02, Transportation, Receipt, and Admittance of Borehole Samples for the Sample Management Facility

LANL-ER-SOP-12.03, Acceptance of Non-Borehole Samples by the Sample Management Facility

"Branch Technical Procedure: Transport, Receipt, Admittance, and Processing of Borehole Samples for the SMF," 1989, Yucca Mountain Project Office, Las Vegas, NV

ER Project Sample Management Facility Contaminant Criteria for the Acceptance of Samples, February 8, 1994

Los Alamos National Laboratory, Radiological Control Manual, 1994

8.0 RECORDS

The SMF Administrative Secretary is ultimately responsible for the transfer of these records to the ER RPF in accordance with the procedure for the Laboratory ER Records Management (LANL-ER-AP-02.1)

9.0 ATTACHMENTS

Attachment A — Core Processing Checklist
Attachment B — Core Markings
Attachment C — Core Photography Log
Attachment D — Photography Set Up
Attachment E — Marks on Lay-Flat Tubing
Attachment F — Cuttings Processing Checklist
Attachment G — Borehole Sample Container Storage Location Log

UNCONTROLLED

SAMPLE MANAGEMENT FACILITY
Core Processing Checklist

Box ID	Number	Of	Borehole	Top	Bottom
00501	1	56	Example	0.0	6.0

	Research	Archive
	____	____
	____	____
3. Missing/Removed Blocks in Place?	____	____
4. Permanent Box Labels applied?	____	____
5. Depth intervals recorded at top and bottom of each box row?	____	____
6. Orientation marks easily visible?	____	____
7. Depth markers clear and legible?	____	____
8. Box dividers inserted?	____	____
9. Core in foam cradles?	____	____
10. Boxes photographed?	____	____
11. Box lids closed?	____	____
12. Permanent assigned shelf location:		

Sample ID	Top	Bottom	Status	Packaging	Comment
000387	0.0	4.0	REC	None	
000388	4.0	4.2	WC-Fld	Unknown	
000389	4.2	6.0	REC	None	

SLABBED CORE ONLY

13. Duplicate boxes constructed?	____	____
14. Orientation marks duplicated?	____	____
15. Core slabbed?	____	____

Special Instructions: _____

Geotechnician _____ Date_____

Curatorial Staff _____ Date_____

UNCONTROLLED

Orientation Stripes

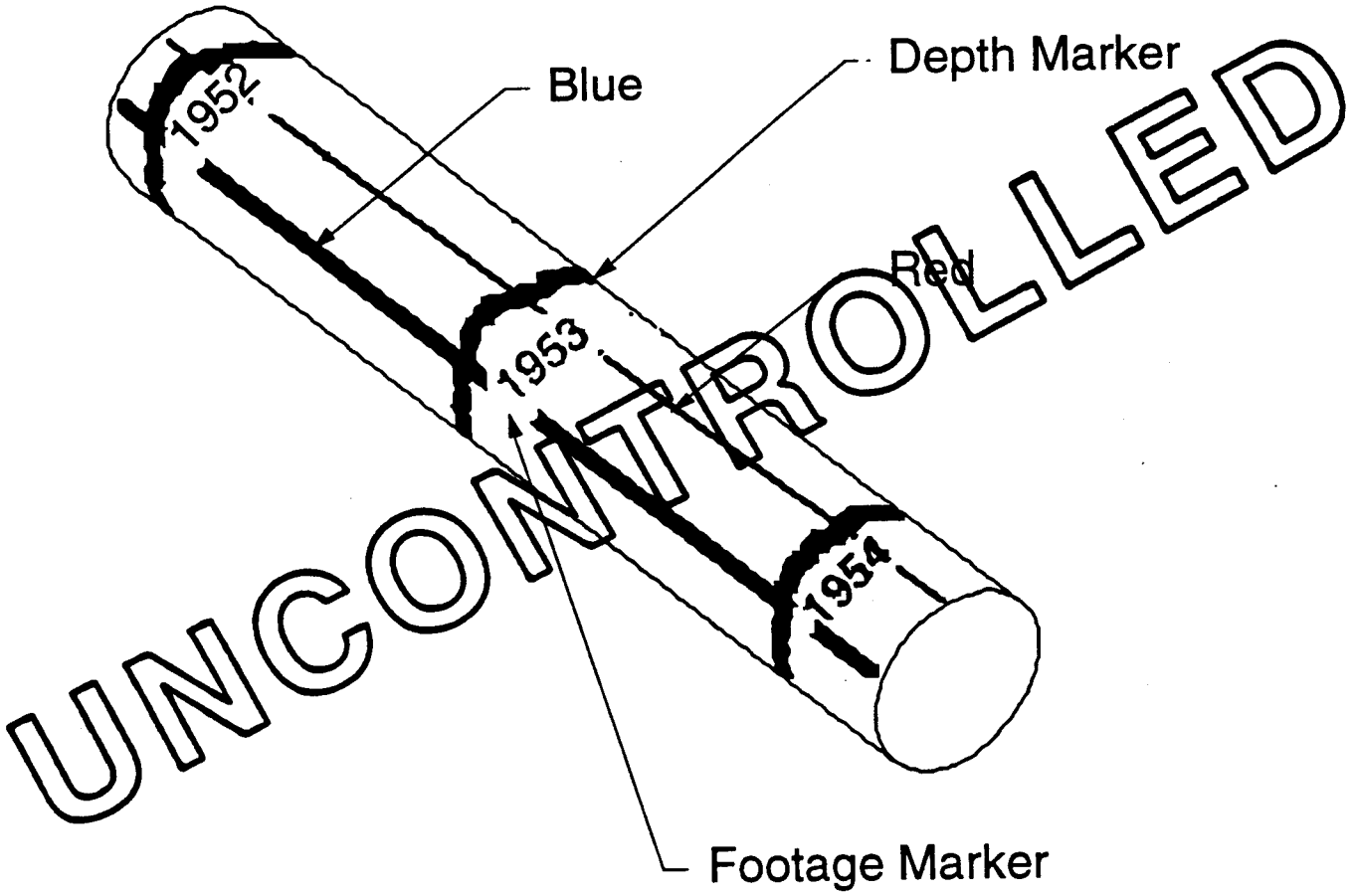

UNCONTROLLED

CORE MARKINGS

LOS ALAMOS NATIONAL LABORATORY ENVIRONMENTAL RESTORATION PROGRAM

SAMPLE MANAGEMENT FACILITY

CORE PHOTOGRAPHY LOG

Borehole ID _____ Photographer _____ Page _____ of _____

Film Speed _____ f-stop _____ Date _____

Exposure #	RCT/ACT Bar Code #	Box Interval	Remarks

Prepared By _____ Date _____ Checked By _____ Date _____

UNCONTROLLED

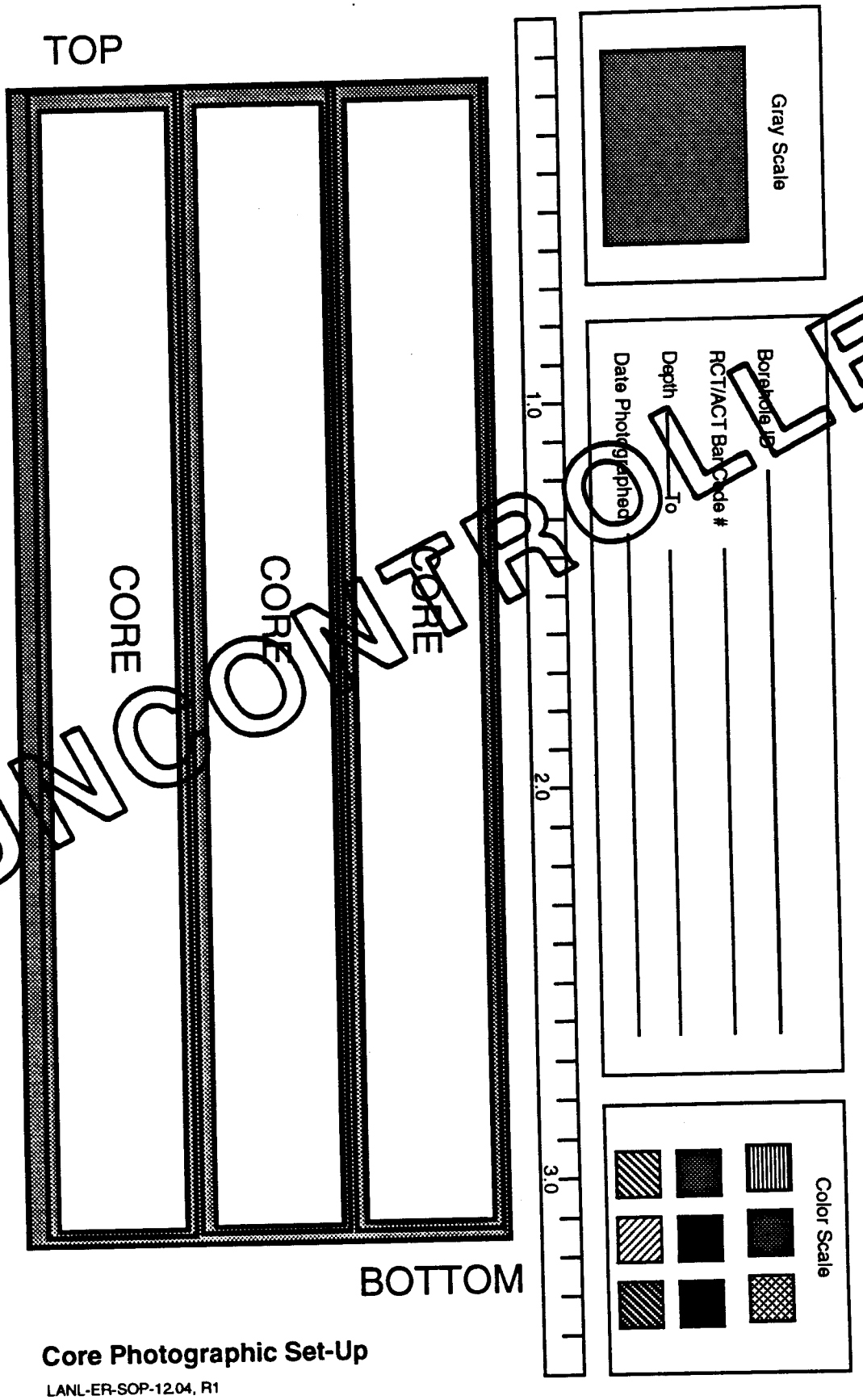

UNCONTROLLED

Core Photographic Set-Up

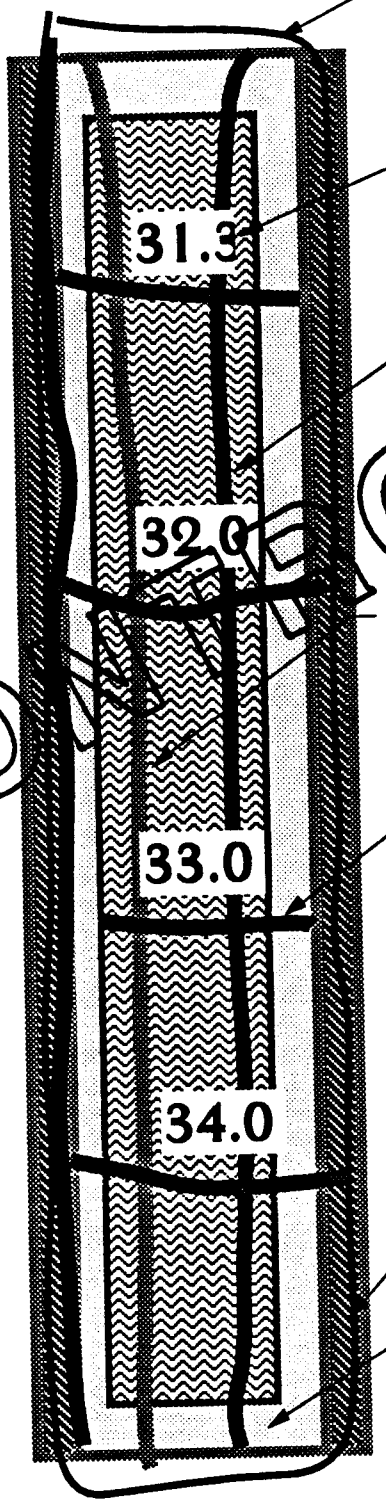

UNCONTROLLED

Marks on Lay-Flat Tubing

LANL-ER-SOP-12.04, R1

UNCONTROLLED

SAMPLE MANAGEMENT FACILITY
Cuttings Processing Checklist

Special Instructions: _____

Box ID	Number	Of	Borehole	Top	Bottom
00900	1	56	Example	0.0	6.0

Sample ID	Top	Bottom	Status
001953	0.0	4.0	REC
001955	4.0	4.2	WC-Fld
001979	4.2	6.0	REC

2. Samples Spit? _____

	Research	Archive
3. Duplicate Box constructed?	_____	_____
4. Box Labels applied?	_____	_____
5. 2 Sample Vials Labled?	_____	_____
6. Samples Placed in box?	_____	_____
7. Box lids closed?	_____	_____
8. Perm. Shelf locations assigned?	_____	_____

Geotechnician _____ Date_____ Curatorial Staff _____ Date_____

BOREHOLE SAMPLE CONTAINER STORAGE LOCATION LOG

Wed, March 4, 1995 Nuumber of records listed: 4 MacCSITS v.3

BoxID	Of Borehole	Number	TopD	BottomD	Type	Research Loc.	Archive Loc.	Date Stored	By
001595	122\LA MESA	1	0.0	5.8	Core				
001596	122\LA MESA	2	5.8	12.5	Core				
001597	122\LA MESA	3	12.5	18.7	Core				
001597	122\LA MESA	4	18.7	25.0	Core				

UNCONTROLLED

Los Alamos National Laboratory **Environmental Restoration Program** Standard Operating Procedure	No: LANL-ER-SOP-12.05 Rev: 1

EXAMINATION OF SAMPLES AT THE SAMPLE MANAGEMENT FACILITY

UNCONTROLLED

Prepared by	Dow Davidson (Print Name)	(Signature)	5 DEC 1994 (Date)
Quality Review by	Dave Bradbury (Print Name)	(Signature)	1/18/95 (Date)
Technical Review by	Greg Bayhurst (Print Name)	Gregory Bayhurst (Signature)	12-20-94 (Date)
PM Approval	Jorg Jansen (Print Name)	(Signature)	3-3-95 (Date)
QPPL Approval	Larry Souza (Print Name)	(Signature)	3/3/95 (Date)

Effective Date: 3/10/95

EXAMINATION OF SAMPLES AT THE SAMPLE MANAGEMENT FACILITY

Contents

1.0 PURPOSE 1

2.0 SCOPE 1
- 2.1 Applicability 1
- 2.2 Training 1

3.0 DEFINITIONS 1

4.0 BACKGROUND AND CAUTIONS 3

5.0 EQUIPMENT 3

6.0 PROCEDURES 3
- 6.1 Responsibilities for Examination of Borehole Samples at the SMF 3
- 6.2 Authorization for Examination 3
- 6.3 Disclosure of Radiation and Non-radiation Monitoring Results by the SMF 3
- 6.4 Examination of Whole Core Prior to Core Examination Meeting 4
- 6.5 Core Examination Meeting 4
- 6.6 Examination of Samples Subsequent to Processing 4
- 6.7 Reshelving of Samples 5

7.0 REFERENCES 5

8.0 RECORDS 5

9.0 ATTACHMENTS 5

UNCONTROLLED

EXAMINATION OF SAMPLES AT THE SAMPLE MANAGEMENT FACILITY

1.0 PURPOSE

The purpose of this procedure is to facilitate the tracking and use of geologic samples examined at the Environmental Restoration (ER) Project Sample Management Facility (SMF). The implementation of this procedure ensures that the traceability and identity of all samples examined at the SMF is maintained.

2.0 SCOPE

The scope of this procedure includes: (1) instructions for coordinating requests for examination of samples by ER Project personnel, (2) responsibilities of SMF staff during sample examination activities, and (3) the documentation related to the examination and the disposition of those documents.

2.1 Applicability

This procedure applies to SMF staff involved with the preparation, documentation, or examination of borehole samples collected for the ER Project and curated at the SMF.

2.2 Training

SMF staff must be trained to this procedure before conducting work, and must document they have read and understand this procedure.

UNCONTROLLED

3.0 DEFINITIONS

A. Core: A core is a cylindrical section of rock, or fragment thereof, that is taken as a sample of the interval penetrated by a core bit and that is brought to the surface for examination and/or analysis.

B. Cuttings: Cuttings are chips of rock produced during drilling that are removed from the borehole by circulation of drilling fluids (gas, foam, or liquid).

C. Examiner: An Examiner is an individual from the ER Program or outside interest who is authorized to visually examine samples at the SMF.

D. Requester: The Requester is an individual from the ER Project or outside interest who requests to visually examine an ER Project sample.

E. Sample: A sample is a physical entity, collected in the field, representative of the whole, that is the original source material for all subsequent analyses and testing activities.

F. Sample Management Facility: The SMF is the facility (Building TA-3-271) used for the documentation, examination, physical processing, storage, and control of selected

samples, remnants, and records collected and distributed for the ER Project. The SMF consists of a physical facility and equipment designed to effectively process and preserve these samples, remnants, and records.

G. SMF Acceptance Criteria for Samples: The allowable exposure levels inside the SMF to radioactivity and non-radioactive contamination occurring from the acceptance, handling, processing, examination, and storage of samples. The SMF Acceptance Criteria are designed to ensure that potential exposures are limited to levels at which health and safety concerns are minimized or eliminated.

4.0 BACKGROUND AND CAUTIONS

N/A

5.0 EQUIPMENT

N/A

6.0 PROCEDURES

6.1 Responsibilities for Examination of Borehole Samples at the SMF

The Curator may authorize extensions of examination periods and determine the need to weigh a sample prior to examination. The Curation Staff shall assist examiners during examination activities and shall ensure that activities performed during examination conform to this procedure. The SMF Geotechnician(s) shall assist examiners during examination activities and shall complete documentation and prepare samples for examination. The SMF Geotechnician(s) shall also verify that the samples have not been visibly altered or subsampled during examination.

6.2 Authorization for Examination

Requesters who want to visually examine samples at the SMF shall submit a completed Sample Examination Request (Attachment A). This request must be approved by the Curator, and received by the SMF prior to the examination. The SMF Geotechnician must use this form to schedule examination of verified whole core and processed samples by the Requester. It is important that the Requester include the requested date, time and duration of the examination to enable the SMF to schedule the requested examination with the minimum of conflict.

6.3 Disclosure of Radiation and Non-radiation Monitoring Results by the SMF

Prior to the examination of any samples, the SMF Curator shall ensure that the Examiner is provided with a summary of monitoring results. These data must indicate (1) whether the values are below natural background, and (2) whether the values are above natural background but below SMF Acceptance Criteria.

UNCONTROLLED

6.4 Examination of Whole Core Prior to Core Examination Meeting

If a requester needs to examine core prior to a Core Examination Meeting, the Requester will be allowed sufficient time to complete the necessary examination.

The Curator may limit examinations based upon contamination levels. Special procedures and/or permits may be required for the examination and handling of contaminated samples (see SOP-12.04).

6.5 Core Examination Meeting

If more than one Requester expresses interest in examining and collecting specimens of core for a particular borehole, a Core Examination Meeting is scheduled subsequent to confirmation and verification of field logging, but prior to core processing. Core Examination Meetings occur as soon as possible after verification of core (LANL-ER-SOP-12.04). In the event that the proposed total depth of the borehole is not reached or is considerably delayed, the meeting will be scheduled to examine all available core. Requesters are notified of the Core Examination Meeting by the SMF.

Data from the Sample Examination Request is used to complete a Sample Examination Report (Attachment B).

The SMF Geotechnician(s) lay out sequential boxes of core from a single borehole in the Sample Examination/Logging Room on or before the scheduled meeting date. A core review packet containing copies of borehole information will be available for Examiners during the Core Examination Meeting.

Examiners examine samples, record requested specimen intervals, and place temporary markers on core to indicate the Examiner and requested interval. If there are intervals that two or more Examiners request, an attempt is made to resolve the conflict during the Core Examination Meeting. If the Examiners are unable to resolve the problem, assignment of specimen intervals will be determined by the Curator.

6.6 Examination of Samples Subsequent to Processing

If an Examiner requests to examine samples after processing, a Sample Examination Report is generated as described above. Prior to or at the time of the Examiner's scheduled examination, the SMF Geotechnician(s) or Curatorial Staff remove the requested samples from storage using the Location module of MacCSITS. Sample weighing and recording of sample weights are carried out at the discretion of the Curator as a quality control measure. The SMF staff may weigh the sample and container individually or together. The containers of samples are then placed on examination tables. Core samples may be compared to photographs prior to examination as an additional quality control activity.

SMF staff are available to work with the Examiners during specimen selection. After each specimen has been selected, measured, and marked, the SMF staff member

UNCONTROLLED

assisting the Examiner makes a list of the specimen request information. When all specimens from a particular borehole have been selected, the list is submitted to the Curator for review and evaluation of the specimen request.

Upon completion of examination of viewing by the Examiner, the SMF Geotechnician(s) may again compare the core samples viewed to the core photographs and reweigh the core boxes to ensure the sample have not been removed or disrupted. If there are no discrepancies, the SMF Geotechnician(s) then complete the Sample Examination Report and initial this action. The SMF Geotechnician(s) signs this form in the lower right-hand corner and submits it to the Curatorial Staff for verification.

6.7 Reshelving of Samples

The SMF Geotechnician(s) reseal all containers with filament tape, remove them from the Sample Examination/Logging Room, and replace them in an appropriate storage location using the Location module of MacCSITS.

7.0 REFERENCES

LANL-ER-QPP, Quality Program Plan for Environmental Restoration Activities
LANL-ER-SOP-12.01, Field Logging, Handling, and Documentation of Borehole Materials
LANL-ER-SOP-12.02, Transportation, Receipt, and Admittance of Borehole Samples for the SMF

"Branch Technical Procedure: Examination of Samples By Participants At The Sample Management Facility," 1989, Yucca Mountain Project Office, Las Vegas, NV

8.0 RECORDS

Sample Examination Request
Sample Examination Report

The Sample Management Facility is ultimately responsible for transfer of these records to the ER Records Processing Facility in accordance with the procedure for the Los Alamos National Laboratory ER Records Management (LANL-ER-AP-02.1)

9.0 ATTACHMENTS

Attachment A - Sample Examination Request
Attachment B - Sample Examination Report

UNCONTROLLED

LOS ALAMOS NATIONAL LABORATORY ENVIRONMENTAL RESTORATION PROGRAM

SAMPLE MANAGEMENT FACILITY

SAMPLE EXAMINATION REQUEST

Requester (Please Print)

First Name_____ **Last Name** _____

Organization _____ **Date of Examination**_____ **Estimated Duration**_____

Mailing Address

_____

_____

_____

City_____ **St.**____ **Zip** _____

Telephone Numbers

Primary Phone No._____

Alternate Phone No._____

Fax No._____

The Environmental Restoration Program geologic samples that have been provided for your examination at the Sample Management Facility are controlled by the Quality Program Plan for Environmental Restoration Activities. The samples are made available to you are for VISUAL EXAMINATION ONLY, NO DESTRUCTIVE ACTIONS OR REMOVAL of SPECIMENS are to be performed. Requesters needing to destroy or consume material for analytical purposes must collaborate with the SMF Staff who will ensure that these actions are properly performed and documented.

I have read the above statement and will comply with sample examination restrictions.

Requester Signature_____

Acquisition Site - TA/OU - Borehole	Depth interval or Reference	Sample Type

SMF USE ONLY:	Curatorial Staff _____ Date _____

UNCONTROLLED

MacCSITS v.3

SAMPLE EXAMINATION REPORT

Boxes Viewed at the Sample Management Facility

Date Viewed: 03/04/95

Examination ID: 0201

Primary Examiner: Andrew J. Fault

Organization: LANL- EES-99

Number of Boxes Viewed: 12

BoxID	OfBhole		Box	TopD	BotD	Type	Exam Room	Weight In	Date	Weight Out	Date	Penetrating Radiation	β/γ Particulates	α Particulates	VOCs	Metals	Radon	Tritium
000234	028	DPC17	001	0.0	4.0	Core	Exam					< NB	< NB	< NB	< NB	< NB	NA	NA
000235	028	DPC17	002	4.0	12.5	Core	Exam					< NB	< NB	< NB	< NB	< NB	NA	NA
000236	028	DPC17	003	12.5	20.0	Core	Exam					< NB	< NB	< NB	< NB	< NB	NA	NA
000238	028	DPC17	004	20.0	25.5	Core	Exam					< NB	< NB	< NB	< NB	< NB	NA	NA
000297	028	DPC17	005	25.5	32.0	Core	Exam					< NB	< NB	< NB	< NB	< NB	NA	NA
000298	028	DPC17	006	32.0	42.5	Core	Exam					< NB	< NB	< NB	< NB	< NB	NA	NA
000299	028	DPC17	007	42.5	50.2	Core	Exam					< NB	< NB	< NB	< NB	< NB	NA	NA
000300	028	DPC17	008	50.2	65.0	Core	Exam					> NB,< AC	< NB	< NB	< NB	< NB	NA	NA
000301	028	DPC17	009	65.0	70.0	Core	Exam					< NB	< NB	< NB	< NB	< NB	NA	NA
000302	028	DPC17	010	70.0	77.5	Core	Exam					< NB	< NB	< NB	< NB	< NB	NA	NA
000303	028	DPC17	011	77.5	82.0	Core	Exam					< NB	< NB	< NB	< NB	< NB	NA	NA
000305	028	DPC17	012	82.0	86.7	Core	Exam					< NB	< NB	< NB	< NB	< NB	NA	NA

NB = Natural Background, AC = SMF Acceptance Crite

NOTE: Complete only Applicable Lines

eotechnician _____ Date_____

Curatorial Staff_____ Date_____

UNCONTROLLED

Los Alamos National Laboratory **Environmental Restoration Program** Standard Operating Procedure	No: LANL-ER-SOP-14.01 Rev: 0

BERTHOLD LOW ALPHA AND BETA ACTIVITY COUNTER CALIBRATION, QUALITY CONTROL, DETECTION LIMIT, AND USE

UNCONTROLLED

Prepared by	Kellie Soukup (Print Name)	Kellie Soukup (Signature)	6/28/93 (Date)
Quality Review by	Dave Bradbury (Print Name)	(Signature)	8/2/93 (Date)
Technical Review by	George Brooks (Print Name)	George Brooks (Signature)	7/9/93 (Date)
PM Approval	Paul L. Aamodt (Print Name)	P L Aamodt (Signature)	8/5/93 (Date)
QPPL Approval	Edward Norris (Print Name)	P L Aamodt for (Signature)	8/5/93 (Date)

Effective Date: 8-10-93

BERTHOLD LOW ALPHA AND BETA ACTIVITY COUNTER CALIBRATION, QUALITY CONTROL, DETECTION LIMIT, AND USE

Contents

1.0 PURPOSE 2

2.0 SCOPE 2
- 2.1 Applicability 2
- 2.2 Training 2

3.0 DEFINITIONS 3

4.0 BACKGROUND AND PRECAUTIONS 3

5.0 EQUIPMENT 4

6.0 PROCEDURE 4
- 6.1 Plateau Counting 4
- 6.2 Calculation of Operation Point 5
- 6.3 Background Counting 6
- 6.4 Determination of Lower Level of Detection (L_D) 6
- 6.5 Calibration 7
  - 6.5.1 Materials 8
  - 6.5.2 Operating Procedures 8
- 6.6 Sample Preparation 9
- 6.7 Sample Counting 9
- 6.8 Performance Check 10
- 6.9 Quality Control (QC) Samples 11

7.0 REFERENCE LITERATURE 11

8.0 RECORDS 12

9.0 ATTACHMENTS 12

UNCONTROLLED

BERTHOLD LOW ALPHA AND BETA ACTIVITY COUNTER CALIBRATION, QUALITY CONTROL, DETECTION LIMIT, AND USE

1.0 PURPOSE

The following procedures outline the methods involved in the use of the Environmental Protection Group's (EM-8's) Berthold Low Activity Alpha and Beta Counter for screening alpha and beta activity in soil samples (see references in Section 7). Specific procedures are given for: 1) Plateau Counting, 2) Background Counting, 3) Calibration, 4) Sample Preparation, 5) Sample Counting, and 6) Performance Check.

2.0 SCOPE

The use of this instrumentation establishes adequate controls to ensure that correct and acceptable measurements will be collected in support of Environmental Management (EM) operations accomplished for the Department of Energy.

2.1 Applicability

This instrument is used in soil radiological surveys conducted by the Waste Site Studies (WSS) section of EM-8 at the Los Alamos National Laboratory (the Laboratory). The Waste Site Studies section is supported, in part, by the environmental surveillance program for the Laboratory Material Disposal Areas (MDAs), the Environmental Restoration (ER) Program, investigations of Solid Waste Management Units (SWMUs), and Waste Management activities at the Laboratory.

Because the Laboratory routinely handles and disposes of waste contaminated with alpha- and beta-emitting radionuclides, a detector that can measure levels of contamination by these radionuclides is required. In addition, before soil samples are allowed to be submitted to EM-9 at TA-59, OH-1, the samples must be screened for gross alpha and beta activity. The Berthold gas proportional counter can simultaneously measure alpha and beta activity levels in up to 10 soil samples.

2.2 Training

User training shall be the responsibility of the principal instrument operator or EM-8 personnel trained by the principal instrument operator. During preparation of these soil samples, small quantities of dust containing low levels of alpha and beta emitters may be generated. All personnel using these procedures must have received Radiation I or II, as well as HAZWOPER training and will be apprised of proper housekeeping and hygiene protocols required to minimize hazards associated with using the Berthold.

UNCONTROLLED

3.0 DEFINITIONS

A. Alpha Particle: A charged subatomic particle containing two protons and two neutrons that is sometimes emitted from the atomic nucleus during radioactive decay. A typical energy level for most alpha emitters is about 5 MeV.

B. Beta Particle: A type of subatomic particle that can be negatively or positively charged (positron), and is sometimes emitted from the atomic nucleus during radioactive decay. The rest mass of the beta particle is equal to that of a normal electron.

C. Proportional Counting: A method of discriminating the detection of an alpha versus a beta particle based on the amount of energy deposited in the detector.

D. Specific Activity: Total activity of a given radionuclide per gram of a compound, element, or radioactive nuclide.

E. Background Counting: A soil background check is recorded for the detector. This serves to establish *a priori* the number of counts (or count rate) required to indicate possible contamination of a sample. A background count rate (R) is measured, and a confidence interval is calculated to establish the background activity distribution.

F. Lower Level of Detection: This is the minimum radioactivity concentration level encountered necessary to be considered statistically separate from the normal, background distribution of radioactivity in the environment.

G. Control Counting: Performance checks are undertaken to certify that the instrument is operating properly. Planchets with known activities are introduced into the instrument and the measured activities must be within specified limits defined for the instrument. (In addition, control samples of known activities are periodically introduced into the instrument during normal runs. The measured activities of these known standards must also fall within specified limits.)

UNCONTROLLED

4.0 BACKGROUND AND PRECAUTIONS

Gas flow proportional counting is a convenient, sensitive method of simultaneously counting alpha and low-energy beta particles.

The Berthold instrument is used to screen soil samples for low levels of alpha and beta emitters. One gram of a soil sample is placed in a planchet and emissions are counted in the detector. One can convert the counts measured into sample alpha and beta activity based on the count yield for the alpha and beta channels. The calibration of the instrument is performed using soil standards prepared by the Health and Environmental Chemistry Group (EM-9).

Some of the advantages of gas proportional counting over Geiger-Muller counting include:

- a thin window which minimizes inherent absorption,
- the chamber allows 2 Pi geometry, which improves count yield,
- alpha and beta emitters in the same sample can be counted simultaneously using different discriminator settings.

The major disadvantage of the gas proportional counting may be imprecision of results caused by the non-homogeneity of the prepared samples, and the inability to distinguish what isotope is contributing to the gross radioactivity of the sample.

PRECAUTIONS

The instrument should not be turned off. When terminating the LB770 PC program, the high voltage should be set to zero.

Never initiate counting unless the gas flow (P-10 argon-methane) has been flowing through the system for **30 minutes**. High voltages to the anode wire may degrade the wire unless the counting gas is in equilibrium with the instrument.

Never allow the counting carrier gas to exceed the capacity of the gas-flow meter. This can damage the mylar window covering the detector. Care should be taken when initiating the gas flow to the detector; turn the needle and pressure valves in small increments until the ball in the flow rate meter begins to move, then adjust to the correct flow.

Always prepare all soil samples under the hood provided in the count trailer. This precaution is taken to minimize dust generation in the trailer.

UNCONTROLLED

5.0 EQUIPMENT

The equipment required for the operation of the Berthold Low Activity Counter system includes:

1) Berthold instrument system
2) Planchets
3) Various performance check sources and standards
4) P-10 gas (Argon/Methane)

6.0 PROCEDURE

6.1 Plateau Counting

Procedure for Determining Proper Operating Potential of the BERTHOLD Low Activity Counter.

Turn on the argon/methane gas flow (P-10 counting gas) so that the float ball is between 10 and 15 units on the flow rate meter, and allow 30 minutes for the gas flow through the instrument to reach equilibrium.

Initiate the software by typing Berthold and <ENT>.

Use the arrow keys to select Measure in the Main Menu. Hit <ENT> to get into the Measure window.

Use the arrow keys to select Plateau in the Measure window, and again hit <ENT>.

At this point, you will be prompted for a file name for the count data to be collected. Enter the file name, for example: PL-MMDDA where MM stands for the current month, and DD stands for the current day, and A stands for the first reading of the day. Hit <ENT> after typing in the file name.

You will be prompted for the type of emission you are counting:, Alpha or Beta. Enter A(lpha) or B(eta) and hit <ENT>.

You will be asked to place the standard sources (alpha or beta emitters) in the planchet holders in the detector. After this has been done, hit <ENT> to begin counting for a standard time period.

Repeat this procedure so that plateaus are measured, separately, for both alpha and beta activities.

UNCONTROLLED

6.2 Calculation of Operation Point

Procedure for determining the optimum high voltage setting.

Use the arrow keys to select Data Handling at the Main Menu. Hit <ENT> to get into the Data Handling window.

Use the arrow keys to select Operation Point Calc. in the Data Handling window. Again hit <ENT>.

The parameter table, Calculate Operation Point, will appear. The names of the files of the last alpha and beta plateau measurements will be listed along with the plateau slopes and spillover. Hit Ctrl-<ENT> to accept the entries.

After confirmation, a window listing the suggested HV-Operation Point will be displayed. Make a note of this value.

Plateau measurements will have to be done periodically or if performance checks indicate measurements are "Out of Control." It is good practice to generate new plateaus whenever the P-10 gas tank or mylar window is changed.

6.3 Background Counting

Procedure for determining proper background of soil samples for the Berthold low activity counter.

Tuff-derived soil background samples for this instrument come from sand traps used in LANL water supply wells.

Turn on the Argon/Methane gas flow (P-10 counting gas) so that the float is at 10 units on the flow meter. Allow 30 minutes for the flow through the chamber to reach equilibrium.

Initiate the software by typing Berthold and <ENT>.

Use the arrow keys to select Parameters at the Main Menu. Hit <ENT> to get into the Parameters window.

Select the Background option of the Parameters window. When the table of parameters appears, input the necessary data, and hit CTRL-<ENT> to save and store the parameters in the background file.

Then select the User option of the Parameters window. Select New Parameter and use the Defaults. Enter a file name, and the suggested HV-Operation Point that was calculated previously. Hit CTRL-<ENT> to save and store the parameters in the user file.

Use the arrow keys to select Measure at the Main Menu. Hit <ENT> to get into the Measure window.

Select the Background option in the Measure window. You will be prompted to select a user parameter file. Select the user file containing the suggested HV-Operation Point and hit <ENT>. The background measurements will automatically be saved into this file.

Insert the planchets with background soil into the planchet holders and hit <ENT> to begin counting samples for an allotted time period. The activity of the background soil samples will be automatically calculated and printed out in a hard copy. The operator can select whether to measure in counts or picocuries.

6.4 Determination of Lower Level of Detection (L_D)

The Lower Level of Detection represents the lowest amount of radioactivity in a sample needed to be considered greater than background. (For this instrument one must calculate L_Ds for both alpha and beta detection.)

UNCONTROLLED

The L_D can be calculated as follows:

$$L_D = 2.71 + 4.65\ (u_B)^{1/2} \text{ (see appendix A)}$$

where, u_B is the mean measured activity for the background soil.

6.5 Calibration

Calibration for alpha and beta counting of soils is accomplished by counting samples of clean soil (the same soil that was used for the background measurement) that have been spiked with known amounts of an alpha or beta emitting radionuclide. Prior to spiking the soils, the alpha and beta background count rates should be determined for the background soil to be used (as discussed above). For optimum results, the spiked sample (standard) should consist of the same material and should be placed in the planchet in the same configuration as the soil samples that are to be counted on a routine basis. The radionuclides used for preparing standards should have similar decay energies to those that one expects to encounter in the unknown soil samples.
By comparing the true activity of the standard soil samples to the activity that is actually measured, the instrument will calculate the efficiency for detecting alpha and beta emissions in each channel. These efficiencies will take into account the geometry of the set-up, the response probability of the detector, the type of calibration source, back scattering and self-absorption.

UNCONTROLLED

The equation for determining instrument efficiency is:

$$\text{Eff} = \frac{\text{cpm}/60}{A}$$

where, cpm = count rate corrected for background and half-life

and A = activity in Bq of the source [Bq is Becquerels (counts/sec)]

A number of alpha emissions will also be registered in the beta channel during simultaneous alpha/beta measurements. The spillover factor corrects for this "spillover" or "crosstalk" into the beta channel. This factor will be determined in the alpha calibration measurement. (Spillover from the beta to alpha channels is considered negligible.)

The equation for calculating the spillover factor during the **alpha** calibration measurement is:spillover factor = beta count rate/alpha count rate

Because the efficiency factor is calculated within the software of the instrument, the external algorithm simply converts the activity of the soil sample from counts per minute (cpm) into pCi/g (since one gram of dry soil will be counted).

This conversion uses the following algorithm:

$(SA/2.22^{12}) * 1.0^{12} = pCi/g$

where, SA = sample activity in cpm

2.22^{12} = conversion unit to Ci

1.0^{12} = conversion unit to pCi

6.5.1 Materials

1) Berthold system

2) Spiked soil sample set in planchets

6.5.2 Operating Procedures

Use the arrow keys to select Parameters at the Main Menu. Hit <ENT> to get into the Parameters window.

Select the Calibration option of the Parameters window. Select New Parameters and hit <ENT>.

When the table of parameters appears, input a file name, the type of emission you are counting ((A)lpha or (B)eta), the measurement time, and sample identification numbers. The count time depends on the application and the desired detection limits and is left to the discretion of the operator. Hit PgDn to get to the second parameter page and enter the half-lives, manufacture date and initial activities of your spiked samples. Hit CTRL-<ENT> to save and store the parameters in the parameter file.

Place the spiked samples in the planchet holders in the order that they appear in the table of calibration parameters. Generally, a spiked set of samples spans an activity range of, for example, 15 - 500pCi.

Use the arrow keys to select Measure in the Main Menu. Hit <ENT> to get into the Measure window.

Use the arrow keys to select Calibration in the Measure window, and hit <ENT>.

You will then be prompted to select a user parameter file. Select the file in which you stored the background measurements, hit <ENT>. (The calibration results will also be stored in this file.)

Next, you will be asked to select a calibration parameter file. Select the file that was just created and hit <ENT>.

UNCONTROLLED

To begin the calibration hit <ENT>.

Repeat this process so that calibration measurements have been performed for both alpha and beta sources.

6.6 Sample Preparation

The samples should be prepared according to the method developed by the user, but preparation of the planchets should be the same as preparation of both background and standard soil sample sets. The planchets will be properly labeled to allow easy identification and tracking through the count lab. A sample label shall consist of a alpha-numeric identification number (ID#). For ER samples, a unique Facility for Information, Management, Analysis, and Display (FIMAD) number is assigned to each sample. For instance, in samples from TA-1, the unique FIMAD number may be 01-1513T.

Open the container holding the soil to be counted. (If the soil is moist, place a few grams of the sample in a petri dish and dry under a heat lamp before proceeding.)

Record the sample number on the bottom of the planchet using a sharpie pen.

Spray the inside of the planchet with a thin film of adhesive.

Place the planchet on the balance and hit the tare button of the balance (this resets balance to zero).

Add the sample to the planchet until the balance reads 1.00 ± 0.01 grams. If possible, try to remove large particles from the planchet, maintaining maximum particle size homogeneity of the sample.

Use a wooden tongue depressor to more evenly spread the sample over the surface of the planchet.

6.7 Sample Counting

The samples are placed in the detector in pre-designated locations, and counting is initiated. At the end of the count time, the data is displayed, and may be output to a printer and to a pre-specified data file.

Turn on the Argon/Methane gas flow (P-10 counting gas) so that the float ball is between 10 and 15 units on the flow meter, and allow 30 minutes for the gas flow through the chamber to reach equilibrium.

Initiate the software by typing Berthold and hit <ENT>.

Use the arrow keys to select Parameters at the Main Menu, and hit <ENT> to get into the Parameters window.

UNCONTROLLED

Select the User option of the Parameters window and hit <ENT>. Select the user parameter file that contains all of your background and calibration data. Hit PgDn until you reach page 5. Use the arrow keys to move around on the page and enter in 27.0 as the normalization factors for channels 6-10. Hit PgDn again to reach page 4, enter 27.0 as the normalization factors for channels 1-5. This will allow you to measure activities in the units of pCi/g. Hit CTRL-<ENT> to save and store this information in the user parameter file.

Use the arrow keys to select Measure at the Main Menu, and hit <ENT> to get into the Measure window.

Select the Sample option from the Measure window. Select the user parameter file that contains your background and calibration results, hit <ENT>. In the table provided by the menu, input a file name and sample identification number(s) and hit CTRL-<ENT> to save and store the information to the file.

Place the planchets in the holders that correspond to the sample identifiers given in the above step. Slide the sample drawer into the detector housing, and hit <ENT> to begin counting.

To view the results on the screen in pCi/g, use the arrows to select the Acti<>cpm option during the measurement and hit <ENT> until the activities are displayed in pCi/g. Note the calculations handled by the associated software package of the LB770 correct for the background, spillover and efficiency factors that were determined in the calibration. The activities measured are those above the mean (clean soil) background activity.

UNCONTROLLED

6.8 Performance Check

The user should make a performance check each day to ensure the detector system is operating properly.

At the beginning of the day, turn on the argon/methane gas flow (P-10 counting gas) so that the float ball is between 10 and 15 units on the flow meter, and allow 30 minutes for the gas flow through the chamber to reach equilibrium.

Initiate the software by typing Berthold and <ENT>.

Ten bare planchets, each containing 10 pCi of either alpha or beta activity, should be prepared for the performance check.

Select Calibration in the Parameters window and set up a New Parameters file using the same procedure that was used for the calibration measurement (see 6.5.2.3). Hit CTRL-<ENT> to save the information.

Select Measure from the Main Menu. Hit <ENT> to get into the Measure window.

Select the Performance option in Measure window, hit <ENT>.

You will be prompted to select a user parameter file, choose the one which contains the correct calibration factors, background and HV-Operation Point. Hit <ENT>. Then you will be asked to select a calibration file, choose the file that contains the activities, half-lives, and manufacture dates for your performance check samples and hit <ENT>.

Place the ten spiked planchets into the holders, and initiate counting by hitting <ENT>.

If the counts do not exceed the maximum deviation defined by the user the system will signal "Performance Check OK!" Print out copies of all Performance Checks and compare each printout with previous printouts. If any systematic drifts are apparent or the instrument does not signal OK, notify the principal instrument operator before continuing with any sample measurements.

6.9 Quality Control (QC) Samples

Quality Control samples of known activities will periodically be counted along with unknown samples as a Quality Assurance (QA) check. The QC samples which are made from a variety of activity levels of ^{241}Am and ^{137}Cs on clean (background) soil, and should comprise approximately 10% of the total number of samples that will be analyzed. These QC standards should be interspersed and run with the samples. Alternatively, pre-prepared radioactive standards embedded in planchet sized holders may be utilized as control samples.

Load the samples and QC's into the planchet holders and count the samples as described in section 6.7 Sample Counting.

UNCONTROLLED

7.0 REFERENCE LITERATURE

This bibliography lists documents that relate to this procedure and that provide additional pertinent information to interested users.

Currie, Lloyd A., "Limits for Qualitative Detection and Quantitative Determination," Analytical Chemistry, 40(3), 586, 1968.

Department of Energy Order 5700.6B, "Quality Assurance," DOE, 1986.

EG&G Ortec, "Berthold, LB770 PC 10 Channel Alpha-Beta Counter, 1st Edition" EG&G Ortec, 100 Midland Rd., Oak Ridge Tennessee, 37830. 1991.

EG&G Ortec, "Maestro II A64-BI Software Operators Manual Version 1.0" EG&G Ortec, 100 Midland Rd., Oak Ridge Tennessee, 37830. 1991.

Fraley, Leslie, Jr., "Radiation Detection and Measurement - A Laboratory Manual." Colorado State University Publications, Fort Collins, CO, Aug. 1991.

Grant, Eugene and Leavenworth, Richard, "Statistical Quality Control." McGraw Hill, NY. 1972.

Kocher, David C., "Radioactive Decay Data Tables," Report DOE/TIC-11026, Technical Information Center, U.S. Department of Energy, Washington, D.C. 1981.

U.S. Department of Health Education and Welfare, "Radiological Health Handbook," Bureau of Radiological Health, Rockville, MD, 1970.

8.0 RECORDS

Records relating to the calibration, maintenance and use of the counting system are maintained by the principal instrument operator or designee. Records of samples counted using the counting system are maintained by the various users of the instrument in EM-8. Prior to submitting the samples to EM-9 for radioisotopic analysis, a hard copy of the data gathered by the instrument for that particular set of samples is provided to EM-9 for sample screening purposes. It is the responsibility of the OUPL to ensure that relevant records are transmitted to RRR, MS M707.

9.0 ATTACHMENTS

Attachment A - Appendix A

UNCONTROLLED

Appendix A

For the Berthold LB770 currently being used by the Waste Site Studies Section of EM-8 at TA-59 the calculation of the Lower Levels of Detection were performed as follows:

(for the detection of beta activity)

$u_B = 13.8$ cpm

$L_D = 2.71 + 4.65\,(13.8)^{1/2}$

$= 20.0$ cpm $= 9$ pCi* (1 pCi = 2.22 cpm)

(for the detection of alpha activity)

$u_B = 0.421$ cpm

$L_D = 2.71 + 4.65\,(0.421)^{1/2}$

$= 5.73$ cpm $= 2.58$ pCi*

*Background measurements were perfolmed on samples containing 1 gram of soil, therefore the units of L_D are really pCi/g.

UNCONTROLLED