File: SPELF
10/31/92

(LANL, 1992, 0520)

LATA · RECEIVED DEC 31 1992

CANL 1993
ERID 31794

LA-10300-M, Vol. II
Manual

Los Alamos Environmental Restoration Records Processing Facility

ER Record I.D.# 31794

Health and Environmental Chemistry: Analytical Techniques, Data Management, and Quality Assurance

Los Alamos National Laboratory is operated by the University of California for the United States Department of Energy under contract W-7405-ENG-36.

Los Alamos
NATIONAL LABORATORY

Los Alamos, New Mexico 87545

13505

Edited by Lori S. Tamura, Group IS-11
Composition by Liana Vigil and Elizabeth Stephens, Group EM-9
Cover art by Rod Furan, Group IS-12

An Affirmative Action/Equal Opportunity Employer

This report was prepared as an account of work sponsored by an agency of the United States Government. Neither The Regents of the University of California, the United States Government nor any agency thereof, nor any of their employees, makes any warranty, express or implied, or assumes any legal liability or responsibility for the accuracy, completeness, or usefulness of any information, apparatus, product, or process disclosed, or represents that its use would not infringe privately owned rights. Reference herein to any specific commercial product, process, or service by trade name, trademark, manufacturer, or otherwise, does not necessarily constitute or imply its endorsement, recommendation, or favoring by The Regents of the University of California, the United States Government, or any agency thereof. The views and opinions of authors expressed herein do not necessarily state or reflect those of The Regents of the University of California, the United States Government, or any agency thereof.

LA-10300-M, Vol. II
Manual

UC-907
Issued: May 1986
Revised: July 1993

Health and Environmental Chemistry: Analytical Techniques, Data Mangement, and Quality Assurance

Edited by Margaret A. Gautier

Los Alamos
NATIONAL LABORATORY
Los Alamos, New Mexico 87545

CONTENTS
(Vol. II)

ENVIRONMENTAL CHEMISTRY

CONTENTS

Preface E-5

Acknowledgments E-7

Abstract E-9

The page numbering convention used in this manual consists of the specific procedure number (shown at left in list below) followed by the page number for that procedure. Thus, ER110-2 is page two of procedure ER110. The right column in the list below gives each procedure's status or effective date.

Environmental Chemistry Analytical Techniques

Environmental Analytical Procedures - Inorganic

EI100 Arsenic in Water and Soil Extracts—Graphite Furnace AA 02/92

EI105 Barium in Water and Soil Extracts—Flame AA 09/92

EI120 Cadmium in Water and Soil Extracts—Graphite Furnace AA 02/92

EI125 Calcium in Water and Soil Extracts—Flame AA 09/92

EI130 Chromium in Oil, Water, and Soil Extracts—Flame AA 09/92

EI135 Chromium in Water and Soil Extracts—Graphite Furnace AA 02/92

EI140 Copper in Water and Soil Extracts—Flame AA 09/92

EI145 Iron in Water and Soil Extracts—Flame AA 09/92

EI150 Lead in Water and Soil Extracts—Graphite Furnace AA 02/92

EI160 Magnesium in Water and Soil Extracts—Flame AA 09/92

EI165 Mercury in Water—Cold Vapor AA ..... In Progress

EI170 Nickel in Water and Soil Extracts—Flame AA 09/92

EI175	Potassium in Water and Soil Extracts—Flame AA	09/92
EI185	Selenium in Water and Soil Extracts—Graphite Furnace	02/92
EI190	Silver in Water and Soil Extracts—Flame AA	09/92
EI195	Sodium in Water and Soil Extracts—Flame AA	09/92
EI200	Thallium on Filters—Graphite Furnace AA	02/92
EI205	Thallium in Water and Soil Extracts—Graphite Furnace AA	02/92
EI210	Zinc in Water and Soil Extracts—Flame AA	09/92
EI300	Barium in Soils—Acid Digestion and ICPAES	Retired
EI400	Anions in Water and Waste Water—IC	06/92
EI520	PH of Soil	10/91
EI630	Arsenic, Antimony, Tungsten, and Molybdenum in Silicates—RENA	Retired
EI730	Mercury in Environmental Materials—Cold Vapor Gold Film Analyzer	10/90
EI735	Sample Preparation for Spectrochemical Analyses of Total Recoverable Elements (EPA Method 200.2)	12/90
EI790	Water (Bound and Unbound) in Geological Matrices—High Temperature Coulometry	Retired

Environmental Analytical Procedures — Radiochemical

ER100	Gross Alpha and Beta Activity in Environmental Matrices—Gas-Flow Proportional Counting	04/92
ER110	Americium-241 in Environmental Matrices (Greater than 2-Gram Samples)—Alpha Spectrometry	06/91
ER120	Americium-241 in Environmental Matrices (Less than 2-Gram Samples)—Alpha Spectrometry	08/92
ER130	Gamma-Ray-Emitting Nuclides in Environmental Matrices—Instrumental Method	03/92

ER140	Qualitative Gamma-Ray Scan of Environmental Matrices	12/91
ER150	Gross Gamma in Environmental Matrices	03/91
ER160	Plutonium in Environmental Matrices—Alpha Spectrometry	03/91
ER165	Plutonium in Sediment (Kilogram Samples)	In Progress
ER170	Radium-226 in Geologicals—Gamma-Ray Spectrometry	04/91
ER180	Radium-226 in Water—Radon Emanation	02/92
ER190	Strontium-90 in Environmental Matrices	08/92
ER200	Thorium-230 in Geologicals—Alpha Spectrometry	05/91
ER210	Tritium in Environmental Matrices—Distillation Procedure	06/92
ER230	Uranium-235/Uranium-238 Ratio in Geologicals and Natural Waters—RTNA	Retired
ER240	Uranium in Air Filters—DNA	05/91
ER250	Uranium in Biological Matrices—DNA	06/91
ER260	Uranium in Geologicals—DNA	05/91
ER270	Uranium in Water—DNA	05/91
ER290	Total Uranium and $^{235}U/^{238}U$ Ratio in Water—ICPMS	02/91
ER300	Depleted Uranium in Soils—IENA	11/90

PREFACE

Los Alamos National Laboratory supports an ongoing environmental surveillance program as required by US Department of Energy Order 5400.1, "General Environmental Protection Program" (November 1988). This surveillance program involves routine monitoring for radiation, radioactive materials, and hazardous chemical substances on Laboratory sites and in the surrounding region. Decisions that must be made regarding environmental compliance depend upon the availability of sound analytical data.

An important tool for evaluating the environment is the analytical method. The analytical methods used by Environmental Chemistry Group (EM-9) support the monitoring activities by documenting compliance with appropriate standards, identifying trends, providing information for the public, and contributing to general environmental knowledge. These methods measure the concentration of the desired analytes with the precision, accuracy, and specificity required by environmental surveillance and compliance personnel.

This section of the manual presents EM-9's environmental chemistry procedures, and is thus part of the overall quality control documentation effort to support the environment, safety, and health programs of the Laboratory. These analytical procedures were developed by the staff of EM-9 or were modified from methods developed and evaluated by the Environmental Protection Agency and others for use with environmental samples. Each procedure is presented in a simple and concise manner. We hope that any competent analyst will be able to use these written procedures.

ACKNOWLEDGMENTS

The encouragement, leadership, and support offered by group EM-9 management are appreciated. The general contributions of the following individuals in developing, evaluating, or writing the methods contained herein are formally acknowledged:

Daryl Knab, Radiochemistry Section Leader
Charles Apel, Inorganic Section Leader
George H. Brooks
Yolanda Giles
Barbara J. Hemberger
Janet D. Morgan
Harry P. Patterson
Richard J. Peters

The section is prepared in loose-leaf form to facilitate revisions of the procedures and the inclusion of additional procedures or data sheets. Requests for clarification or for help in resolving difficulties while using the procedures are welcome.

Margaret A. Gautier
Editor

Environmental Chemistry
Analytical Techniques

Edited by

Margaret A. Gautier

ABSTRACT

This section of the manual has been prepared to document the analytical methodology used by the Los Alamos National Laboratory Environmental Chemistry Group for environmental analyses. It is part of the overall quality control effort to support the environment, safety, and health programs of the Laboratory. The analytical procedures were either developed by the Environmental Chemistry staff, modified from standard methods developed and evaluated by the Environmental Protection Agency, or adapted from procedures found in the literature and have been tested by chemists and technicians to show their validity. The methods measure the concentration of the desired analytes with the precision, accuracy, and specificity required by environmental surveillance and compliance personnel. The procedures utilize equipment and skills available in modern analytical laboratories. Precision and accuracy statements are provided where such data are available. Each procedure is presented in a simple and concise manner and includes interferences, apparatus, reagent preparation, calibration methods, and data reduction formulas.

CONTENTS

Preface E-7

Acknowledgments E-9

Abstract E-11

The page numbering convention used in this manual consists of the specific procedure number (shown at left in list below) followed by the page number for that procedure. Thus, ER110-2 is page two of procedure ER110. The right column in the list below gives each procedure's status or effective date.

Environmental Chemistry Analytical Techniques

Environmental Analytical Procedures - Inorganic

EI100 Arsenic in Water and Soil Extracts—Graphite Furnace AA 02/92

EI105 Barium in Water and Soil Extracts—Flame AA 09/92

EI120 Cadmium in Water and Soil Extracts—Graphite Furnace AA 02/92

EI125 Calcium in Water and Soil Extracts—Flame AA 09/92

EI130 Chromium in Oil, Water, and Soil Extracts—Flame AA 09/92

EI135 Chromium in Water and Soil Extracts—Graphite Furnace AA 02/92

EI140 Copper in Water and Soil Extracts—Flame AA 09/92

EI145 Iron in Water and Soil Extracts—Flame AA 09/92

EI150 Lead in Water and Soil Extracts—Graphite Furnace AA 02/92

EI160 Magnesium in Water and Soil Extracts—Flame AA 09/92

EI165 Mercury in Water—Cold Vapor AA 09/92

EI170 Nickel in Water and Soil Extracts—Flame AA 09/92

EI175 Potassium in Water and Soil Extracts—Flame AA 09/92

EI185 Selenium in Water and Soil Extracts—Graphite Furnace 02/92

EI190 Silver in Water and Soil Extracts—Flame AA 09/92

EI195 Sodium in Water and Soil Extracts—Flame AA 09/92

EI200 Thallium on Filters—Graphite Furnace AA 02/92

EI205 Thallium in Water and Soil Extracts—Graphite Furnace AA 02/92

EI210 Zinc in Water and Soil Extracts—Flame AA 09/92

EI300 Barium in Soils—Acid Digestion and ICPAES ..... Retired

EI400 Anions in Water and Waste Water—IC 06/92

EI520 pH of Soil 10/91

EI630 Arsenic, Antimony, Tungsten, and Molybdenum in Silicates—RENA Retired

EI730 Mercury in Environmental Materials—Cold Vapor Gold Film Analyzer 10/90

EI735 Sample Preparation for Spectrochemical Analyses of Total Recoverable Elements (EPA Method 200.2) 12/90

EI790 Water (Bound and Unbound) in Geological Matrices—High Temperature Coulometry ..... Retired

Environmental Analytical Procedures—Organic

EO400 Polychlorinated Biphenyls (PCBs) in Oil: Solvent Extraction—GC/ECD 03/93

EO410 Polychlorinated Biphenyls (PCBs) in Soil: Solvent Extraction—GC/ECD 03/93

EO420 Polychlorinated Biphenyls (PCBs) in Swipes: Solvent Extraction—GC/ECD 03/93

EO430 Polychlorinated Biphenyls (PCBs) in Water: Solvent Extraction—GC/ECD 03/93

EO500	Semivolatile Organics in Solid Matrices: Solvent Extraction—GC/MS	05/93
EO530	Semivolatile Organics in Aqueous Matrices: Solvent Extraction—GC/MS	05/93
EO720	Volatile Organic Compounds in Soil and Sediment: Capillary Column Technique—GC/MS (EPA SW846 Method 8260)	05/93
EO730	Volatile Organic Compounds in Water: Precision Dynatech Autosampler Capillary Column Technique—GC/MS (EPA SW846 Method 8260)	05/93

Environmental Analytical Procedures — Radiochemical

ER100	Gross Alpha and Beta Activity in Environmental Matrices—Gas-Flow Proportional Counting	04/92
ER110	Americium-241 in Environmental Matrices (Greater than 2-Gram Samples)—Alpha Spectrometry	02/93
ER120	Americium-241 in Environmental Matrices (Less than 2-Gram Samples)—Alpha Spectrometry	08/92
ER130	Gamma-Ray-Emitting Nuclides in Environmental Matrices—Instrumental Method	04/93
ER140	Qualitative Gamma-Ray Scan of Environmental Matrices	04/93
ER150	Gross Gamma in Environmental Matrices	03/91
ER160	Plutonium in Environmental Matrices—Alpha Spectrometry	04/93
ER165	Plutonium in Sediment (Kilogram Samples)	In Progress
ER170	Radium-226 in Geologicals—Gamma-Ray Spectrometry	04/91
ER180	Radium-226 in Water—Radon Emanation	04/93
ER190	Strontium-90 in Environmental Matrices	08/92
ER200	Thorium-230 in Geologicals—Alpha Spectrometry	05/91
ER210	Tritium in Environmental Matrices—Distillation Procedure	06/92

ER230	Uranium-235/Uranium-238 Ratio in Geologicals and Natural Waters—RTNA	Retired
ER240	Uranium in Air Filters—DNA	05/91
ER250	Uranium in Biological Matrices—DNA	06/91
ER260	Uranium in Geologicals—DNA	05/91
ER270	Uranium in Water—DNA	05/91
ER290	Total Uranium and $^{235}U/^{238}U$ Ratio in Water—ICPMS	02/91
ER300	Depleted Uranium in Soils—IENA	Retired

Mobile Laboratory Analytical Techniques

Mobile Laboratory Analytical Procedures—Organic

MLO274	Petroleum Hydrocarbons, Total Recoverable in Soil—Mobile Laboratory Method	04/93
MLO410	Polychlorinated Biphenyls (PCBs) in Soil—Mobile Laboratory Method	03/93
MLO500	Semivolatile Organics in Solid Matrices: Solvent Extraction-GC/MS—Mobile Laboratory Method	04/93
MLO510	Extraction of Semivolatile Organic Analytes in Solid Matrices for Analysis by GC/MS—Mobile Laboratory Method	04/93
MLO720	Volatile Organic Compounds in Soil Sediment—Mobile Laboratory Method	04/93

Mobile Laboratory Analytical Procedures—Radiochemical

MLR100	Gross Alpha/Beta Screening of Silicates—Mobile Laboratory Method	02/93
MLR200	Gross Gamma Screening of Silicates—Mobile Laboratory Method	02/93

MLR300 Gross Tritium Analysis of Silicates—
Mobile Laboratory Method 02/93

MLR400 Gross Moisture Analysis of Silicates—
Mobile Laboratory Method 02/93

PREFACE

Los Alamos National Laboratory supports an ongoing environmental surveillance program as required by US Department of Energy Order 5400.1, "General Environmental Protection Program" (November 1988). This surveillance program involves routine monitoring for radiation, radioactive materials, and hazardous chemical substances on Laboratory sites and in the surrounding region. Decisions that must be made regarding environmental compliance depend upon the availability of sound analytical data.

An important tool for evaluating the environment is the analytical method. The analytical methods used by Environmental Chemistry Group (EM-9) support the monitoring activities by documenting compliance with appropriate standards, identifying trends, providing information for the public, and contributing to general environmental knowledge. These methods measure the concentration of the desired analytes with the precision, accuracy, and specificity required by environmental surveillance and compliance personnel.

This section of the manual presents EM-9's environmental chemistry procedures, and is thus part of the overall quality control documentation effort to support the environment, safety, and health programs of the Laboratory. These analytical procedures were developed by the staff of EM-9 or were modified from methods developed and evaluated by the Environmental Protection Agency and others for use with environmental samples. Each procedure is presented in a simple and concise manner. We hope that any competent analyst will be able to use these written procedures.

ACKNOWLEDGMENTS

The encouragement, leadership, and support offered by group EM-9 management are appreciated. The general contributions of the following individuals in developing, evaluating, or writing the methods contained herein are formally acknowledged:

Daryl Knab, Radiochemistry Section Leader
Charles Apel, Inorganic Section Leader
George H. Brooks
Yolanda Giles
Barbara J. Hemberger
Janet D. Morgan
Harry P. Patterson
Richard J. Peters

The section is prepared in loose-leaf form to facilitate revisions of the procedures and the inclusion of additional procedures or data sheets. Requests for clarification or for help in resolving difficulties while using the procedures are welcome.

Margaret A. Gautier
Editor

Environmental Chemistry
Analytical Techniques

Edited by

Margaret A. Gautier

ABSTRACT

This section of the manual has been prepared to document the analytical methodology used by the Los Alamos National Laboratory Environmental Chemistry Group for environmental analyses. It is part of the overall quality control effort to support the environment, safety, and health programs of the Laboratory. The analytical procedures were either developed by the Environmental Chemistry staff, modified from standard methods developed and evaluated by the Environmental Protection Agency, or adapted from procedures found in the literature and have been tested by chemists and technicians to show their validity. The methods measure the concentration of the desired analytes with the precision, accuracy, and specificity required by environmental surveillance and compliance personnel. The procedures utilize equipment and skills available in modern analytical laboratories. Precision and accuracy statements are provided where such data are available. Each procedure is presented in a simple and concise manner and includes interferences, apparatus, reagent preparation, calibration methods, and data reduction formulas.

ARSENIC IN WATER AND SOIL EXTRACTS – GRAPHITE FURNACE AA

Analyte: Arsenic	**Method No.:** EI100
Matrix: Water, waste water, and soil extracts	**Detection Limit:** 2.0 μg/L
Procedure: Graphite furnace atomic absorption	**Accuracy and Precision:** 102% ± 1.02% RSD
Effective Date: 09/25/91	**Authors:** Michael G. Bell Barbara J. Hemberger

SAFETY NOTE: Before beginning this procedure, read all of the Material Safety Data Sheets for the chemicals listed in Sec. 6. Read Sec. 4.3 of the EM-9 Safety Manual for information on personal protective clothing and equipment.

1. Principle of Method

1.1. This procedure is based on Environmental Protection Agency (EPA) method 206.2 and SW846 method 7060.

1.2. Arsenic in solution may be readily determined by graphite furnace atomic absorption spectroscopy. The method is applicable to As in drinking, surface, and saline waters and in domestic and industrial wastes.

1.3. Drinking water free of particulate matter may be analyzed directly. Ground water, other aqueous samples, TCLP extracts, industrial wastes, soils, sludges, sediments, and other solid wastes require digestion before analysis.

2. Accuracy and Precision

2.1. The determination of arsenic in 19 in-house quality control samples (55 μg/L) over an 8-month period had a mean of 56.3 μg/L and a relative standard deviation (RSD) of 1.02%.

3. Collection and Storage of Samples.

3.1. Preserve samples with nitric acid (HNO_3) at a pH <2.0. Complete analysis within 6 months.

4. Interferences

4.1. Contamination is of prime concern during sample preparation. Periodically clean the work area, including the bench top, to eliminate environmental contamination. Use acid-washed sample cups in the autosampler.

4.2. Chemical interferences can be controlled by the addition of a matrix modifier to all samples and standards. Refer to Perkin-Elmer chart 0993-8199 Rev. D (11/89), or to the PE Methods of Analysis for AAS, for the appropriate matrix modifier.

4.3. Silica from the glassware will grow into the sample solution during and following sample processing. To control this problem, use disposable sterile 50-mL polypropylene centrifuge tubes in the sample digestion steps.

5. Apparatus

5.1. Centrifuge tubes: 50-mL, sterile polypropylene.

5.2. Rainin pipettes with disposable tips.

5.3. Wash bottles: 125-mL, polypropylene, screw tops.

5.4. Hot plate: with aluminum heating block drilled to hold centrifuge tubes.

5.5. Perkin-Elmer 5000 atomic absorption instrument: equipped with a Zeeman graphite furnace or equivalent.

5.6. Required gas for the instrument is ultrapure argon.

6. Reagents

6.1. Nitric acid (low-temperature redistilled acid, LTRD).

6.2. Hydrochloric acid (low-temperature redistilled acid, LTRD).

6.3. Double-deionized water.

6.4. ASTM Type I water (>10 MΩ/cm resistivity, <0.1 μmho/cm conductivity).

6.5. Appropriate matrix modifier for all samples, standards, and QCs.

6.6. Secondary standards for making the appropriate standard curves.

7. Sample Preparation Procedure

7.1. To determine total recoverable elements in water, waste water, and soil extracts, take a 50-mL aliquot from an acid-preserved sample containing not more than 0.25% (wt/vol) total solids. Place the aliquot in a sterile 50-mL disposable polypropylene centrifuge tube.

7.1.1. Add 500 μL of LTRD HNO_3 and 250 μL of Ultrex or LTRD HCl to each sample.

7.1.2. Heat on a hot plate without boiling (approximately 85°C) until the volume is reduced to 5-10 mL.

7.1.3. Loosely cover the tube with the cap and reflux for 30 min.

7.1.4. Allow the sample to cool and dilute to 50 mL with ASTM Type I water.

7.1.5. Run one digested blank and one digested spike for each digested batch.

7.1.6. Run a duplicate and a spike for 10-20% of the samples.

7.1.7. For TCLP samples, run a spike for every sample and 20% duplicates.

7.1.8. The analysis should be performed before the EPA regulatory holding times expire.

7.1.9. Add sample and standards to acid-cleaned sample cups.

8. Instrument Procedure

8.1. Instrument power and gases check.

8.1.1. Turn the **POWER SWITCH** on the PE5000 Atomic Absorption (AA) to **ON**.

8.1.2. Turn **ON** the argon supply valve after checking the pressure at the tank. Pressure must be over 100 psi or the tank must be changed.

8.1.3. Turn the AA switch from **STANDBY** mode to **RUN**.

8.1.4. Make sure the exhaust hood over the graphite furnace is functioning.

8.2. Instrument setup.

8.2.1. Insert the arsenic lamp into the turret oriented toward the ETVAA and plug it in.

8.2.2. Enter **turret lamp number** into keyboard.

8.2.3. Enter recommended **lamp milliamps** (mA) or **watts** depending on lamp type (EDL/HCL).

8.2.3.1. Warm up the EDL and/or HCL lamp for at least 20 min.

8.2.4. Enter **lamp slit width** using **LOW SLIT** key for ETVAA.

8.2.5. Enter **lamp wavelength** using **LAMBDA PEAK** key.

8.2.6. Turn AA switch inside lamp housing to **ICP/ZAA** position.

8.3. Keyboard setup.

8.3.1. Set **SIGNAL** key to **PK AREA** (peak area).

8.3.2. Turn **REC ABS** (record absorbance) signal key **ON**.

8.3.3. Enter **AVG** (average) number (if used).

8.3.4. Enter **CONC MODE** (concentration).

8.4. Furnace setup.

8.4.1. Press **ZAA** key.

8.4.2. Turn **ACCESSORY** knob to **ON** position.

8.4.3. Turn chiller **ON** and check that the water level is above the coils.

8.4.4. Check that the water bottle for distilled water rinse on the autosampler is full.

8.4.5. Turn **ON** the HGA-500 programmer.

8.4.5.1. Enter the temperature program for the element from the ETVAA procedure manual and store the procedure number.

8.5. Computer setup.

8.5.1. Turn PE AA Data System 10 computer **master switch** to **ON**.

8.5.2. Set up ID/WT file.

8.5.3. Turn **print button** on PE5000 keyboard **ON** and store the program.

8.6. Set up autosampler.

8.6.1. Recalibrate the standard curve every 8 to 12 samples.

8.6.2. Enter the number of standards (# stds).

8.6.3. Enter the last sample number (last samp).

8.6.4. Enter the sample volume (samp vol).

8.6.5. Enter the alternate volume (alt vol) for the matrix modifier if used.

8.6.6. Enter the instrument program number (inst prog).

8.6.7. Enter the HGA program number (HGA prog).

8.7. Graphite furnace setup.

8.7.1. Open the furnace and clean or replace the graphite tube. Use the tube with or without the platform depending on the element.

8.7.2. If inserting a new tube, condition it with the manual temperature key.

8.7.3. Using the alignment tool, reinsert the graphite tube and close the furnace.

8.7.4. Using the manual temperature key, set the pyrometer to the atomization temperature of the element and balance the lights (red/green) using the calibration (CAL) knob.

8.7.5. Place the AS40 in **STANDBY** mode and align the autosampler arm. Check the depth of the sample delivery inside the tube and inside the samples. Exit **STANDBY** mode.

8.7.6. Remove and check the furnace lenses. Reinsert the lenses and check the absorbance. If the absorbance reads above 0.100, clean the lenses.

8.7.7. Put samples and standards into the autosampler tray and cover with the dust cover to prevent contamination.

8.7.8. Put the matrix modifier in the holder position, if required.

8.7.9. Check the blank and standards manually.

8.7.10. Calculate the characteristic concentration (cc). If it is within ±20% of chart value (0993-8199 Rev. D 11/89) start the run.

8.7.11. Enter **collect data** mode on PE Data System 10 computer and follow instructions.

8.7.12. After run is complete, press to **DISK** key on PE Data System 10 **twice**.

8.7.13. Select **report** mode on the computer, follow instructions, and print out the final report.

8.7.14. When finished, shut off the chiller, argon gas supply, lamps, EDL power supply, and computer.

8.7.15 Place the autosampler, HGA Programmer, and PE5000 in standby mode.

9. Emergency Shutdown Procedure

9.1. In case of power failure, turn **POWER SWITCH** on PE5000 AA to **OFF**.

9.2. Turn **off** the **gas valves**.

9.3. Follow building power failure procedures.

10. Calculations

10.1. Characteristic concentration (cc).

$$cc = \frac{C \times V \times 0.0044}{A_s},$$

where cc = characteristic concentration for ETVAA,
C = concentration of standard, (μg/L)
V = sample aliquot, (μL)
A_s = absorbance of standard, and
0.0044 = 1% absorbance.

11. Source Material

11.1. *Analytical Methods for Atomic Absorption Spectrophotometry*, (Perkin-Elmer, Norwalk, Conn., 1976).

11.2. *Instructions: Zeeman/5000 System*, (Perkin-Elmer, Norwalk, Conn., 1982).

11.3. Methods for Chemical Analysis of Water and Wastes, EPA-600/4-79-020 U.S. Environmental Protection Agency (rev. March 1983).

11.4. Perkin-Elmer chart 0993-8199 Rev. D (11/89).

11.5. "Test Methods for Evaluation of Solid Waste: Laboratory Manual of Physical and Chemical Methods," EPA report no. SW-846 (November 1986).

BARIUM IN WATER AND SOIL EXTRACTS — FLAME AA

Analyte: Barium	**Method No.:** EI105
Matrix: Water, waste water, and soil extracts	**Detection Limit:** 100 μg/L
Procedure: Flame atomic absorption	**Accuracy and Precision:** 100% ± 1.0% RSD
Effective Date: 09/23/91	**Authors:** Michael G. Bell Barbara J. Hemberger

SAFETY NOTE: Before beginning this procedure, read all of the Material Safety Data Sheets for the chemicals listed in Sec. 6. Read Sec. 4.3 of the EM-9 Safety Manual for information on personal protective clothing and equipment. Read Sec. 11 of this procedure and Source Material 12.5 for proper waste disposal practices.

1. Principle of Method

1.1. This procedure is based on Environmental Protection Agency (EPA) method 208.1 and SW-846 method 7080.

1.2. Barium in solution may be readily determined by atomic absorption spectroscopy (AAS). The method is simple and rapid and is applicable to Ba in drinking, surface, and saline waters and in domestic and industrial wastes.

1.3. Drinking water free of particulate matter may be analyzed directly. Ground water, other aqueous samples, TCLP extracts, industrial wastes, soils, sludges, sediments, and other solid wastes require digestion prior to analysis.

2. Accuracy and Precision

2.1. The determination of barium in four in-house quality control samples (400 μg/L) over a three-month period had a mean of 397.5 μg/L and a relative standard deviation (RSD) of 1.0%.

3. Collection and Storage of Samples

3.1. Preserve samples with nitric acid (HNO_3) at a pH <2.0. Complete analysis within six months.

4. Interferences

4.1. Contamination is of prime concern during sample preparation. The work area, including the bench top, should be periodically cleaned to eliminate environmental contamination.

4.2. Chemical interferences can be controlled by the addition of KCl, a matrix modifier, to all samples and standards at high concentration levels (1.0%).

4.3. Silica from the glassware will grow into the sample solution during and following sample processing. Use sterile disposable 50-mL polypropylene centrifuge tubes in the sample digestion steps to control this problem.

5. Apparatus

5.1. Centrifuge tubes: 50-mL, sterile polypropylene.

5.2. Rainin pipettes with disposable tips.

5.3. Wash bottles: 125-mL, polypropylene, screw tops.

5.4. Hot plate: with aluminum heating block drilled to hold centrifuge tubes.

5.5. Perkin-Elmer 5000 atomic absorption spectrometer or equivalent.

5.6. Gases for the above instrument: air, acetylene, nitrous oxide, argon.

6. Reagents

6.1. Nitric acid (low-temperature redistilled acid, LTRD).

6.2. Hydrochloric acid (low-temperature redistilled acid, LTRD).

6.3. Double-deionized water.

6.4. Potassium chloride. Matrix modifier for all samples and standards.

6.5. ASTM Type I water (>10 MΩ/cm resistivity, <0.1 μmho/cm conductivity).

7. Sample Preparation Procedure

7.1. To determine total recoverable elements in water or waste water, take a 50-mL aliquot from an acid-preserved sample containing not more than 0.25% (wt/vol) total solids. Place the aliquot in a sterile disposable 50-mL polypropylene centrifuge tube.

7.1.1. Add 500 μL of LTRD HNO_3 and 250 μL of Ultrex or LTRD HCl to each sample.

7.1.2. Heat on a hot plate without boiling (approximately 85°C) until the final volume is reduced to 5-10 mL.

7.1.3. Loosely cover the tube with the cap and reflux for 30 min.

7.1.4. Allow the sample to cool and dilute to 50 mL with ASTM Type I water.

7.1.5. Run one digested blank and one digested spike with each digested batch.

7.1.6. Run a duplicate and a spike for 10-20% of the samples.

7.1.7. For TCLP samples, run a spike for every sample and run 20% duplicates.

8. Instrument Procedure

8.1. Power instrument and check gases.

8.1.1. Turn the **POWER** switch on the Perkin-Elmer (PE) 5000 atomic absorption (AA) spectrometer to **ON**.

8.1.2. Turn the **POWER** switch on the PE 5000 automatic burner control to **ON**.

8.1.3. Turn the **AIR SUPPLY** valve **ON**.

8.1.4. Check the pressure in the acetylene tank; if it is <100 psi, change the tank. Turn the **ACETYLENE SUPPLY** valve **ON**.

8.1.5. Turn the **NITROUS OXIDE SUPPLY** valve **ON**, if necessary.

8.1.6. Turn the AA switch from **STANDBY** mode to **RUN**.

8.1.7. Make sure the exhaust hood is functioning.

8.1.8. Make sure the fluids in the drain vessel and drain loop are at their proper levels.

8.2. Instrument setup.

8.2.1. Insert the barium lamp in the turret and plug it in.

8.2.2. Enter the **turret lamp number** on the keyboard.

8.2.3. Enter the recommended **lamp milliamps** (mA).

8.2.4. Enter the **lamp slit width** using the **HIGH SLIT** key for flame AA.

8.2.5. Enter the **lamp wavelength** using the **LAMBDA PEAK** key.

8.2.6. For **signal keys**, enter the **CONTINUOUS** key for setup.

8.2.7. Press the **RECORD ABSORBANCE** key.

8.2.8. Set the **MODE** key to **ABSORBANCE.**

8.2.9. If the wavelength is >300 nm, use the **AA-MODE** key.

8.2.10. If the wavelength is <300 nm, use the **AA-BG MODE** key.

8.2.11. Press the **SETUP** key and adjust the lamp for maximum absorbance.

8.2.11.1. If the absorbance is >80, press the **GAIN** key and continue the lamp adjustment.

8.2.11.2. When the maximum absorbance is reached, turn the **SETUP** key to **OFF.**

8.2.12. Set the **TIME** key to 0.5 s.

8.2.13. Press the **AZ** (autozero) key. Absorbance should read zero.

8.2.14. Install the 10-cm burner head for air-acetylene analysis and the 5-cm head for nitrous oxide-acetylene.

8.2.15. Adjust the burner head height.

8.2.16. Set oxidant and acetylene flow from Table 8.2 in PE *Analytical Methods for AAS.* (source material 12.1).

8.2.17. Shut the burner shield door and light the flame using the flame **ON/OFF** key on the burner assembly.

8.2.18. Aspirate double-deionized water while the flame is lit.

8.2.19. Aspirate the standard and adjust the instrument for maximum absorbance.

8.3. Running samples.

8.3.1. Enter S1, S2, and S3 as directed for standards in *Analytical Methods for AAS.*

8.3.2. Reset **TIME** key to 3 to 6 s.

8.3.3. Press the signal **HOLD** key.

8.3.4. Select **AVERAGE** key if desired.

8.3.5. Aspirate the known standard and press the **READ** key.

8.3.6. Calculate the characteristic concentration (cc). The result should be within ±20% of the value in *Analytical Methods for AAS*.

8.3.7. Aspirate the calibration-curve standards and read the absorbance.

8.3.8. Switch the **MODE** key to **CONC** (concentration).

8.3.9. Aspirate the standards to set concentration keys as needed.

8.3.10. Read samples and QCs (blind and known).

8.3.11. Recalibrate the instrument with standards every 8 to 12 readings.

8.3.12. When finished, switch the flame **ON/OFF** key to **OFF**. Press the **CHECK FLOW** key on the auto burner control twice to relieve line pressure.

8.3.13. Turn the **POWER** switch on the automatic burner control to **OFF**.

8.3.14. Switch the PE 5000 to **STANDBY** mode.

9. Emergency Shutdown Procedure

9.1. In case of power failure, turn the **POWER** switch on the PE 5000 to **OFF**.

9.2. Turn the gas valves **OFF**.

9.3. Follow procedures for building power failure.

10. Calculations

10.1. Characteristic concentration (cc).

$$cc = \frac{C \times 0.0044}{A_s},$$

where cc = characteristic concentration for flame AA,
C = concentration of standard,
0.0044 = 1% absorbance, and
A_s = absorbance of standard.

11. Proper Waste Disposal Practices

11.1. Solid Waste

11.1.1. Solid waste contaminated with hazardous chemicals above the level of concern is not generated during the routine preparation of QC samples for analysis for inorganic contaminants.

11.1.2. If a solid waste is generated that may be contaminated at a level of concern, the appropriate paperwork is completed on a case-by-case basis.

11.1.2.1. A Waste Profile Request Form (WPRF) describing the solid waste is completed and sent to the Waste Management Group for review.

11.1.2.2. If the Waste Management Group determines that the solid waste is contaminated below the level of concern, the waste is disposed of as ordinary laboratory trash.

11.1.2.3. If the Waste Management Group determines that the solid waste is contaminated above the level of concern, pickup of the contaminated waste is requested as described in Sec. 9.3.

11.2. Liquid Waste

11.2.1. Liquid waste containing hazardous contaminants, such as solutions of trace metals, is accumulated in a coated glass jar in a secondary containment tray and is kept segregated from liquid waste contaminated with organic or radioactive substances or cyanide.

11.2.2. The bottle is labeled with a hazardous waste label and a label indicating its use for trace-metal waste.

11.2.3. The bottle is opened only for the period of time necessary to add waste to it.

11.2.4. When the bottle is full, it is capped and kept in the secondary containment tray pending pickup by the Waste Management Group.

11.2.5. A new bottle is labeled for further use.

11.3. Waste Pickup

11.3.1. Pickup by the Waste Management Group of solid waste or a full bottle of liquid waste containing trace metals is requested using the current

Chemical Waste Disposal Request Form (CWDR). The current Waste Profile Request Form (WPRF) that describes the waste is referenced on the CWDR.

11.3.2. The Waste Management Group picks up the waste for disposal in accord with Laboratory policy.

12. Source Materials

12.1. Perkin-Elmer Corp., *Analytical Methods for Atomic Absorption Spectroscopy* (Norwalk, CT, 1976).

12.2. Perkin-Elmer Corp., *Instructions: Zeeman/5000 System* (Norwalk, CT, 1982).

12.3. U.S. Environmental Protection Agency, "Methods for Chemical Analysis of Water and Wastes," EPA-600/4-79-020 (rev. March 1983).

12.4. U.S. Environmental Protection Agency, "Test Methods for Evaluation of Solid Waste: Laboratory Manual of Physical and Chemical Methods," SW-846 (Nov. 1986).

12.5. "Chemical, Hazardous, and Mixed Waste," Administrative Requirement 10-3, Chapter 1 in Los Alamos National Laboratory *Environment, Safety, and Health Manual* (most recent edition).

CADMIUM IN WATER AND SOIL EXTRACTS — GRAPHITE FURNACE AA

Analyte: Cadmium	**Method No.:** EI120
Matrix: Water, waste water, and soil extracts	**Detection Limit:** 0.1 μg/L
Procedure: Graphite furnace atomic absorption	**Accuracy and Precision:** 102% ± 1.02% RSD
Effective Date: 09/25/91	**Authors:** Michael G. Bell Barbara J. Hemberger

SAFETY NOTE: Before beginning this procedure, read all of the Material Safety Data Sheets for the chemicals listed in Sec. 6. Read Sec. 4.3 of the EM-9 Safety Manual for information on personal protective clothing and equipment.

1. Principle of Method

1.1. This procedure is based on Environmental Protection Agency (EPA) method 213.2 and SW846 method 7130.

1.2. Cadmium in solution may be readily determined by graphite furnace atomic absorption spectroscopy. The method is applicable to Cd in drinking, surface, and saline waters and in domestic and industrial wastes.

1.3. Drinking water free of particulate matter may be analyzed directly. Ground water, other aqueous samples, TCLP extracts, industrial wastes, soils, sludges, sediments, and other solid wastes require digestion before analysis.

2. Accuracy and Precision

2.1. The determination of cadmium in 15 in-house quality control samples (5.8 μg/L) over an 8-month period had a mean of 5.9 μg/L and a relative standard deviation (RSD) of 1.02%.

3. Collection and Storage of Samples.

3.1. Preserve samples with nitric acid (HNO_3) at a pH <2.0. Complete analysis within 6 months.

4. Interferences

4.1. Contamination is of prime concern during sample preparation. Periodically clean the work area, including the bench top, to eliminate environmental contamination. Use acid-washed sample cups in the autosampler.

4.2. Chemical interferences can be controlled by the addition of a matrix modifier to all samples and standards. Refer to Perkin-Elmer chart 0993-8199 Rev. D (11/89), or to the PE Methods of Analysis for AAS for the appropriate matrix modifier.

4.3. Silica from the glassware will grow into the sample solution during and following sample processing. To control this problem, use disposable sterile 50-mL polypropylene centrifuge tubes in the sample digestion steps.

5. Apparatus

5.1. Centrifuge tubes: 50-mL, sterile polypropylene.

5.2. Rainin pipettes with disposable tips.

5.3. Wash bottles: 125-mL, polypropylene, screw tops.

5.4. Hot plate: with aluminum heating block drilled to hold centrifuge tubes.

5.5. Perkin-Elmer 5000 atomic absorption instrument: equipped with a Zeeman graphite furnace or equivalent.

5.6. Required gas for the above instrument is ultrapure argon.

6. Reagents

6.1. Nitric acid (low-temperature redistilled acid, LTRD).

6.2. Hydrochloric acid (low-temperature redistilled acid, LTRD).

6.3. Double-deionized water.

6.4. ASTM Type I water (>10 MΩ/cm resistivity, <0.1 μmho/cm conductivity).

6.5. Appropriate matrix modifier for all samples, standards, and QC's.

6.6. Secondary standards for making the appropriate standard curves.

7. Sample Preparation Procedure

7.1. To determine total recoverable elements in water, waste water, and soil extracts, take a 50-mL aliquot from an acid-preserved sample containing not more than 0.25% (wt/vol) total solids. Place the aliquot in a sterile 50-mL disposable polypropylene centrifuge tube.

7.1.1. Add 500 μL of LTRD HNO_3 and 250 μL of Ultrex or LTRD HCl to each sample.

7.1.2. Heat on a hot plate without boiling (approximately 85°C) until the volume is reduced to 5-10 mL.

7.1.3. Loosely cover the tube with the cap and reflux for 30 min.

7.1.4. Allow the sample to cool, and dilute to 50 mL with ASTM Type I water.

7.1.5. Run one digested blank and one digested spike for each digested batch.

7.1.6. Run a duplicate and a spike for 10-20% of the samples.

7.1.7. For TCLP samples, run a spike for every sample and 20% duplicates.

7.1.8. The analysis should be performed before the EPA regulatory holding times expire.

7.1.9. Add sample and standards to acid-cleaned sample cups.

8. Instrument Procedure

8.1. Instrument power and gases check.

8.1.1. Turn the **POWER SWITCH** to the PE5000 Atomic Absorption (AA) to **ON**.

8.1.2. Turn **ON** the argon supply valve after checking the pressure at the tank. Pressure must be over 100 psi or the tank must be changed.

8.1.3. Turn the AA switch from **STANDBY** mode to **RUN**.

8.1.4. Make sure the exhaust hood over the graphite furnace is functioning.

8.2. Instrument setup.

8.2.1. Insert the cadmium lamp into the turret oriented toward the ETVAA and plug it in.

8.2.2. Enter **turret lamp number** into keyboard.

8.2.3. Enter recommended **lamp milliamps** (mA) or **watts** depending on lamp type (EDL/HCL).

8.2.3.1. Warm up the EDL and/or HCL lamp for at least 20 min.

8.2.4. Enter **lamp slit width** using **LOW SLIT** key for ETVAA.

8.2.5. Enter **lamp wavelength** using **LAMBDA PEAK** key.

8.2.6. Turn AA switch inside lamp housing to **ICP/ZAA** position.

8.3. Keyboard setup.

8.3.1. Set **SIGNAL** key to **PK AREA** (peak area).

8.3.2. Turn **REC ABS** (record absorbance) signal key **ON**.

8.3.3. Enter **AVG** (average) number (if used).

8.3.4. Enter **CONC MODE** (concentration).

8.4. Furnace setup.

8.4.1. Press **ZAA** key.

8.4.2. Turn **ACCESSORY** knob to **ON** position.

8.4.3. Turn chiller **ON** and check that the water level is above the coils.

8.4.4. Check that the water bottle for distilled water rinse on the autosampler is full.

8.4.5. Turn **ON** the HGA-500 programmer.

8.4.5.1. Enter the temperature program for the element from the ETVAA procedure manual and store the procedure number.

8.5. Computer setup.

8.5.1 Turn PE AA Data System 10 computer **master switch** to **ON**.

8.5.2 Set up ID/WT file.

8.5.3 Turn **print button** on PE5000 keyboard **ON** and store the program.

8.6. Set up autosampler.

8.6.1. Recalibrate the standard curve every 8 to 12 samples.

8.6.2. Enter the number of standards (# stds).

8.6.3. Enter the last sample number (last samp).

8.6.4. Enter the sample volume (samp vol).

8.6.5. Enter the alternate volume (alt vol) for the matrix modifier if used.

8.6.6. Enter the instrument program number (inst prog).

8.6.7. Enter the HGA program number (HGA prog).

8.7. Graphite furnace setup.

8.7.1. Open the furnace and clean or replace the graphite tube. Use the tube with or without the platform depending on the element.

8.7.2. If inserting a new tube, condition it with the manual temperature key.

8.7.3. Using the alignment tool, reinsert the graphite tube and close the furnace.

8.7.4. Using the manual temperature key, set the pyrometer to the atomization temperature of the element and balance the lights (red/green) using the calibration (CAL) knob.

8.7.5. Place the AS40 in **STANDBY** mode and align the autosampler arm. Check the depth of the sample delivery inside the tube and inside the samples. Exit **STANDBY** mode.

8.7.6. Remove and check the furnace lenses. Reinsert the lenses and check the absorbance. If the absorbance reads above 0.100, clean the lenses.

8.7.7. Put samples and standards into the autosampler tray and cover with the dust cover to prevent contamination.

8.7.8. Put the matrix modifier in the holder position, if required.

8.7.9. Check the blank and standards manually.

8.7.10. Calculate the characteristic concentration (cc). If it is within ±20% of chart value (0993-8199 Rev. D 11/89) start the run.

8.7.11. Enter **collect data** mode on PE Data System 10 computer and follow instructions.

8.7.12. After run is complete, press to **DISK** key on PE Data System 10 **twice**.

8.7.13. Select **report** mode on the computer, follow instructions, and print out the final report.

8.7.14. When finished, shut off the chiller, argon gas supply, lamps, EDL power supply, and computer.

8.7.15. Place the autosampler, HGA Programmer, and PE5000 in standby mode.

9. Emergency Shutdown Procedure

9.1. In case of power failure, turn **POWER SWITCH** on PE5000 AA to **OFF**.

9.2. Turn **off** the **gas valves**.

9.3. Follow building power failure procedures.

10. Calculations

10.1. Characteristic concentration (cc).

$$cc = \frac{C \times V \times 0.0044}{A_s} ,$$

where cc = characteristic concentration for ETVAA,
C = concentration of standard,
V = sample aliquot (μL),
A_s = absorbance of standard, and
0.0044 = 1% absorbance.

11. Source Material

11.1. *Analytical Methods for Atomic Absorption Spectrophotometry*, (Perkin-Elmer, Norwalk, Conn., 1976).

11.2. *Instructions: Zeeman/5000 System*, (Perkin-Elmer, Norwalk, Conn., 1982).

11.3. Methods for Chemical Analysis of Water and Wastes, EPA-600/4-79-020 U.S. Environmental Protection Agency, rev. March 1983).

11.4. Perkin-Elmer chart 0993-8199 Rev. D (11/89).

11.5. "Test Methods for Evaluation of Solid Waste: Laboratory Manual of Physical and Chemical Methods," EPA report no. SW-846 (November 1986).

CALCIUM IN WATER AND SOIL EXTRACTS — FLAME AA

Analyte: Calcium	**Method No.:** EI125
Matrix: Water, waste water, and soil extracts	**Detection Limit:** 25 mg/L
Procedure: Flame atomic absorption	**Accuracy and Precision:** not determined
Effective Date: 09/23/91	**Authors:** Michael G. Bell Barbara J. Hemberger

SAFETY NOTE: Before beginning this procedure, read all of the Material Safety Data Sheets for the chemicals listed in Sec. 6. Read Sec. 4.3 of the EM-9 Safety Manual for information on personal protective clothing and equipment. Read Sec. 11 of this procedure and Source Material 12.5 for proper waste disposal practices.

1. Principle of Method

1.1. This procedure is based on Environmental Protection Agency (EPA) method 215.1 and SW-846 method 7140.

1.2. Calcium in solution may be readily determined by atomic absorption spectroscopy (AAS). The method is simple and rapid and is applicable to Ca in drinking, surface, and saline waters and in domestic and industrial wastes.

1.3. Drinking water free of particulate matter may be analyzed directly. Ground water, other aqueous samples, TCLP extracts, industrial wastes, soils, sludges, sediments, and other solid wastes require digestion before analysis.

2. Accuracy and Precision

2.1. The accuracy and precision of the method for in-house quality control samples has not yet been determined.

3. Collection and Storage of Samples

3.1. Preserve samples with nitric acid (HNO_3) at a pH <2.0. Complete analysis within six months.

4. Interferences

4.1. Contamination is of prime concern during sample preparation. The work area, including the bench top, should be periodically cleaned to eliminate environmental contamination.

4.2. Chemical interferences can be controlled by the addition of KCl, a matrix modifier, to all samples and standards at high concentration levels (0.1%).

4.3. Silica from the glassware will grow into the sample solution during and following sample processing. Use sterile disposable 50-mL polypropylene centrifuge tubes in the sample digestion steps to control this problem.

5. Apparatus

5.1. Centrifuge tubes: 50-mL, sterile polypropylene.

5.2. Rainin pipettes with disposable tips.

5.3. Wash bottles: 125-mL, polypropylene, screw tops.

5.4. Hot plate: with aluminum heating block drilled to hold centrifuge tubes.

5.5. Perkin-Elmer 5000 atomic absorption spectrometer or equivalent.

5.6. Gases for the above instrument: air, acetylene, nitrous oxide, argon.

6. Reagents

6.1. Nitric acid (low-temperature redistilled acid, LTRD).

6.2. Hydrochloric acid (low-temperature redistilled acid, LTRD).

6.3. Double-deionized water.

6.4. Potassium chloride. Matrix modifier for all samples and standards.

6.5. ASTM Type I water (>10 MΩ/cm resistivity, <0.1 μmho/cm conductivity).

7. Sample Preparation Procedure

7.1. To determine total recoverable elements in water or waste water, take a 50-mL aliquot from an acid-preserved sample containing not more than 0.25% (wt/vol) total solids. Place the aliquot in a sterile disposable 50-mL polypropylene centrifuge tube.

7.1.1. Add 500 μL of LTRD HNO_3 and 250 μL of Ultrex or LTRD HCl to each sample.

7.1.2. Heat on a hot plate without boiling (approximately 85°C) until the final volume is reduced to 5-10 mL.

7.1.3. Loosely cover the tube with the cap and reflux for 30 min.

7.1.4. Allow the sample to cool and dilute to 50 mL with ASTM Type I water.

7.1.5. Run one digested blank and one digested spike with each digested batch.

7.1.6. Run a duplicate and a spike for 10-20% of the samples.

7.1.7. For TCLP samples, run a spike for every sample and run 20% duplicates.

8. Instrument Procedure

8.1. Power instrument and check gases.

8.1.1. Turn the **POWER** switch on the Perkin-Elmer (PE) 5000 atomic absorption (AA) spectrometer to **ON**.

8.1.2. Turn the **POWER** switch on the PE 5000 automatic burner control to **ON**.

8.1.3. Turn the **AIR SUPPLY** valve **ON**.

8.1.4. Check the pressure in the acetylene tank; if it is <100 psi, change the tank. Turn the **ACETYLENE SUPPLY** valve **ON**.

8.1.5. Turn the **NITROUS OXIDE SUPPLY** valve **ON**, if necessary.

8.1.6. Turn the AA switch from **STANDBY** mode to **RUN**.

8.1.7. Make sure the exhaust hood is functioning.

8.1.8. Make sure the fluids in the drain vessel and drain loop are at their proper levels.

8.2. Instrument setup.

8.2.1. Insert the calcium lamp in the turret and plug it in.

8.2.2. Enter the **turret lamp number** on the keyboard.

8.2.3. Enter the recommended **lamp milliamps** (mA).

8.2.4. Enter the **lamp slit width** using the **HIGH SLIT** key for flame AA.

8.2.5. Enter the **lamp wavelength** using the **LAMBDA PEAK** key.

8.2.6. For **signal keys**, enter the **CONTINUOUS** key for setup.

8.2.7. Press the **RECORD ABSORBANCE** key.

8.2.8. Set the **MODE** key to **ABSORBANCE.**

8.2.9. If the wavelength is >300 nm, use the **AA-MODE** key.

8.2.10. If the wavelength is <300 nm, use the **AA-BG MODE** key.

8.2.11. Press the **SETUP** key and adjust the lamp for maximum absorbance.

8.2.11.1. If the absorbance is >80, press the **GAIN** key and continue the lamp adjustment.

8.2.11.2. When the maximum absorbance is reached, turn the **SETUP** key to **OFF.**

8.2.12. Set the **TIME** key to 0.5 s.

8.2.13. Press the **AZ** (autozero) key. Absorbance should read zero.

8.2.14. Install the 10-cm burner head for air-acetylene analysis and the 5-cm head for nitrous oxide-acetylene.

8.2.15. Adjust the burner head height.

8.2.16. Set oxidant and acetylene flow from Table 8.2 in PE *Analytical Methods for AAS.* (source material 12.1).

8.2.17. Shut the burner shield door and light the flame using the flame **ON/OFF** key on the burner assembly.

8.2.18. Aspirate double-deionized water while the flame is lit.

8.2.19. Aspirate the standard and adjust the instrument for maximum absorbance.

8.3. Running samples.

8.3.1. Enter S1, S2, and S3 as directed for standards in *Analytical Methods for AAS.*

8.3.2. Reset **TIME** key to 3 to 6 s.

8.3.3. Press the signal **HOLD** key.

8.3.4. Select **AVERAGE** key if desired.

8.3.5. Aspirate the known standard and press the **READ** key.

8.3.6. Calculate the characteristic concentration (cc). The result should be within ±20% of the value in *Analytical Methods for AAS*.

8.3.7. Aspirate the calibration-curve standards and read the absorbance.

8.3.8. Switch the **MODE** key to **CONC** (concentration).

8.3.9. Aspirate the standards to set concentration keys as needed.

8.3.10. Read samples and QCs (blind and known).

8.3.11. Recalibrate the instrument with standards every 8 to 12 readings.

8.3.12. When finished, switch the flame **ON/OFF** key to **OFF**. Press the **CHECK FLOW** key on the auto burner control twice to relieve line pressure.

8.3.13. Turn the **POWER** switch on the automatic burner control to **OFF**.

8.3.14. Switch the PE 5000 to **STANDBY** mode.

9. Emergency Shutdown Procedure

9.1. In case of power failure, turn the **POWER** switch on the PE 5000 to **OFF**.

9.2. Turn the gas valves **OFF**.

9.3. Follow procedures for building power failure.

10. Calculations

10.1. Characteristic concentration (cc).

$$cc = \frac{C \times 0.0044}{A_s},$$

where cc = characteristic concentration of flame AA,
C = concentration of standard,
0.0044 = 1% absorbance, and
A_s = absorbance of standard.

11. Proper Waste Disposal Practices

11.1. Solid Waste

11.1.1. Solid waste contaminated with hazardous chemicals above the level of concern is not generated during the routine preparation of QC samples for analysis for inorganic contaminants.

11.1.2. If a solid waste is generated that may be contaminated at a level of concern, the appropriate paperwork is completed on a case-by-case basis.

11.1.2.1. A Waste Profile Request Form (WPRF) describing the solid waste is completed and sent to the Waste Management Group for review.

11.1.2.2. If the Waste Management Group determines that the solid waste is contaminated below the level of concern, the waste is disposed of as ordinary laboratory trash.

11.1.2.3. If the Waste Management Group determines that the solid waste is contaminated above the level of concern, pickup of the contaminated waste is requested as described in Sec. 9.3.

11.2. Liquid Waste

11.2.1. Liquid waste containing hazardous contaminants, such as solutions of trace metals, is accumulated in a coated glass jar in a secondary containment tray and is kept segregated from liquid waste contaminated with organic or radioactive substances or cyanide.

11.2.2. The bottle is labeled with a hazardous waste label and a label indicating its use for trace-metal waste.

11.2.3. The bottle is opened only for the period of time necessary to add waste to it.

11.2.4. When the bottle is full, it is capped and kept in the secondary containment tray pending pickup by the Waste Management Group.

11.2.5. A new bottle is labeled for further use.

11.3. Waste Pickup

11.3.1. Pickup by the Waste Management Group of solid waste or a full bottle of liquid waste containing trace metals is requested using the current Chemical Waste Disposal Request Form (CWDR). The current Waste

Profile Request Form (WPRF) that describes the waste is referenced on the CWDR.

11.3.2. The Waste Management Group picks up the waste for disposal in accord with Laboratory policy.

12. Source Materials

12.1. Perkin-Elmer Corp., *Analytical Methods for Atomic Absorption Spectroscopy* (Norwalk, CT, 1976).

12.2. Perkin-Elmer Corp., *Instructions: Zeeman/5000 System* (Norwalk, CT, 1982).

12.3. U.S. Environmental Protection Agency, "Methods for Chemical Analysis of Water and Wastes," EPA-600/4-79-020 (rev. March 1983).

12.4. U.S. Environmental Protection Agency, "Test Methods for Evaluation of Solid Waste: Laboratory Manual of Physical and Chemical Methods," SW-846 (Nov. 1986).

12.5. "Chemical, Hazardous, and Mixed Waste," Administrative Requirement 10-3, Chapter 1 in Los Alamos National Laboratory *Environment, Safety, and Health Manual* (most recent edition).

CHROMIUM IN OIL, WATER, AND SOIL EXTRACTS — FLAME AA

Analyte: Chromium	**Method No.:** EI130
Matrix: Oil, water, waste water, and soil extracts	**Detection Limit:** 1.0 mg/L
Procedure: Flame atomic absorption	**Accuracy and Precision:** 100% ± 4.0% RSD
Effective Date: 09/23/91	**Authors:** Michael G. Bell Barbara J. Hemberger

SAFETY NOTE: Before beginning this procedure, read all of the Material Safety Data Sheets for the chemicals listed in Sec. 6. Read Sec. 4.3 of the EM-9 Safety Manual for information on personal protective clothing and equipment. Read Sec. 11 of this procedure and Source Material 12.5 for proper waste disposal practices.

1. Principle of Method

1.1. This procedure is based on Environmental Protection Agency (EPA) method 218.1 and SW-846 method 7190.

1.2. Chromium in solution may be readily determined by atomic absorption spectroscopy (AAS). The method is simple and rapid and is applicable to Cr in drinking, surface, and saline waters and in domestic and industrial wastes.

1.3. Drinking water free of particulate matter may be analyzed directly. Ground water, other aqueous samples, TCLP extracts, industrial wastes, soils, sludges, sediments, and other solid wastes require digestion before analysis. In oil, methyl isobutyl ketone is used as the solvent for samples and standards.

2. Accuracy and Precision

2.1. The determination of chromium in 27 in-house quality control samples (18.6 μg/L) over a 9-month period had a mean of 17.8 μg/L and a relative standard deviation (RSD) of 4.0%.

3. Collection and Storage of Samples

3.1. Preserve samples with nitric acid (HNO_3) at a pH <2.0. Complete analysis within six months.

4. Interferences

4.1. Contamination is of prime concern during sample preparation. The work area, including the bench top, should be periodically cleaned to eliminate environmental contamination.

4.2. Chemical interferences are matrix dependent and can be corrected by the addition of matrix modifiers. Refer to the Perkin-Elmer (PE) Analytical Methods for AAS for appropriate modifier.

4.3. Silica from the glassware will grow into the sample solution during and following sample processing. Use sterile disposable 50-mL polypropylene centrifuge tubes in the sample digestion steps to control this problem.

5. Apparatus

5.1. Centrifuge tubes: 50-mL, sterile polypropylene.

5.2. Rainin pipettes with disposable tips.

5.3. Wash bottles: 125-mL, polypropylene, screw tops.

5.4. Hot plate: with aluminum heating block drilled to hold centrifuge tubes.

5.5. Perkin-Elmer 5000 atomic absorption spectrometer or equivalent.

5.6. Gases for the above instrument: air, acetylene, nitrous oxide, argon.

6. Reagents

6.1. Nitric acid (low-temperature redistilled acid, LTRD).

6.2. Hydrochloric acid (low-temperature redistilled acid, LTRD).

6.3. Double deionized water.

6.4. Methyl isobutyl ketone (MIBK).

6.5. ASTM Type I water (>10 MΩ/cm resistivity, <0.1 μmho/cm conductivity).

7. Sample Preparation Procedure

7.1. To determine total recoverable elements in water or waste water, take a 50-mL aliquot from an acid-preserved sample containing not more than 0.25% (wt/vol) total solids. Place the aliquot in a sterile disposable 50-mL polypropylene centrifuge tube.

7.1.1. Add 500 μL of LTRD HNO_3 and 250 μL of Ultrex or LTRD HCl to each sample.

7.1.2. Heat on a hot plate without boiling (approximately 85°C) until the final volume is reduced to 5-10 mL.

7.1.3. Loosely cover the tube with the cap and reflux for 30 min.

7.1.4. Allow the sample to cool and dilute to 50 mL with ASTM Type I water.

7.1.5. Run one digested blank and one digested spike with each digested batch.

7.1.6. Run a duplicate and a spike for 10-20% of the samples.

7.1.7. For TCLP samples, run a spike for every sample and run 20% duplicates.

8. Instrument Procedure

8.1. Power instrument and check gases.

8.1.1. Turn the **POWER** switch on the Perkin-Elmer (PE) 5000 atomic absorption (AA) spectrometer to **ON**.

8.1.2. Turn the **POWER** switch on the PE 5000 automatic burner control to **ON**.

8.1.3. Turn the **AIR SUPPLY** valve **ON**.

8.1.4. Check the pressure in the acetylene tank; if it is <100 psi, change the tank. Turn the **ACETYLENE SUPPLY** valve **ON**.

8.1.5. Turn the **NITROUS OXIDE SUPPLY** valve **ON**, if necessary.

8.1.6. Turn the AA switch from **STANDBY** mode to **RUN**.

8.1.7. Make sure the exhaust hood is functioning.

8.1.8. Make sure the fluids in the drain vessel and drain loop are at their proper levels.

8.2. Instrument setup.

8.2.1. Insert the chromium lamp in the turret and plug it in.

8.2.2. Enter the **turret lamp number** on the keyboard.

8.2.3. Enter the recommended **lamp milliamps** (mA).

8.2.4. Enter the **lamp slit width** using the **HIGH SLIT** key for flame AA.

8.2.5. Enter the **lamp wavelength** using the **LAMBDA PEAK** key.

8.2.6. For **signal keys**, enter the **CONTINUOUS** key for setup.

8.2.7. Press the **RECORD ABSORBANCE** key.

8.2.8. Set the **MODE** key to **ABSORBANCE**.

8.2.9. If the wavelength is >300 nm, use the **AA-MODE** key.

8.2.10. If the wavelength is <300 nm, use the **AA-BG MODE** key.

8.2.11. Press the **SETUP** key and adjust the lamp for maximum absorbance.

8.2.11.1. If the absorbance is >80, press the **GAIN** key and continue the lamp adjustment.

8.2.11.2. When the maximum absorbance is reached, turn the **SETUP** key to **OFF**.

8.2.12. Set the **TIME** key to 0.5 s.

8.2.13. Press the **AZ** (autozero) key. Absorbance should read zero.

8.2.14. Install the 10-cm burner head for air-acetylene analysis and the 5-cm head for nitrous oxide-acetylene.

8.2.15. Adjust the burner head height.

8.2.16. Set oxidant and acetylene flow from Table 8.2 in PE *Analytical Methods for AAS*. (source material 12.1).

8.2.17. Shut the burner shield door and light the flame using the flame **ON/OFF** key on the burner assembly.

8.2.18. Aspirate double-deionized water while the flame is lit.

8.2.19. Aspirate the standard and adjust the instrument for maximum absorbance.

8.3. Running samples.

8.3.1. Enter S1, S2, and S3 as directed for standards in *Analytical Methods for AAS*.

8.3.2. Reset **TIME** key to 3 to 6 s.

8.3.3. Press the signal **HOLD** key.

8.3.4. Select **AVERAGE** key if desired.

8.3.5. Aspirate the known standard and press the **READ** key.

8.3.6. Calculate the characteristic concentration (cc). The result should be within ±20% of the value in *Analytical Methods for AAS*.

8.3.7. Aspirate the calibration-curve standards and read the absorbance.

8.3.8. Switch the **MODE** key to **CONC** (concentration).

8.3.9. Aspirate the standards to set concentration keys as needed.

8.3.10. Read samples and QCs (blind and known).

8.3.11. Recalibrate the instrument with standards every 8 to 12 readings.

8.3.12. When finished, switch the flame **ON/OFF** key to **OFF**. Press the **CHECK FLOW** key on the auto burner control twice to relieve line pressure.

8.3.13. Turn the **POWER** switch on the automatic burner control to **OFF**.

8.3.14. Switch the PE 5000 to **STANDBY** mode.

9. Emergency Shutdown Procedure

9.1. In case of power failure, turn the **POWER** switch on the PE 5000 to **OFF**.

9.2. Turn the gas valves **OFF**.

9.3. Follow procedures for building power failure.

10. Calculations

10.1. Characteristic concentration (cc).

$$cc = \frac{C \times 0.0044}{A_s},$$

where cc = characteristic concentration for flame AA,
C = concentration of standard,
0.0044 = 1% absorbance, and
A_s = absorbance of standard.

11. Proper Waste Disposal Practices

11.1. Solid Waste

11.1.1. Solid waste contaminated with hazardous chemicals above the level of concern is not generated during the routine preparation of QC samples for analysis for inorganic contaminants.

11.1.2. If a solid waste is generated that may be contaminated at a level of concern, the appropriate paperwork is completed on a case-by-case basis.

11.1.2.1. A Waste Profile Request Form (WPRF) describing the solid waste is completed and sent to the Waste Management Group for review.

11.1.2.2. If the Waste Management Group determines that the solid waste is contaminated below the level of concern, the waste is disposed of as ordinary laboratory trash.

11.1.2.3. If the Waste Management Group determines that the solid waste is contaminated above the level of concern, pickup of the contaminated waste is requested as described in Sec. 9.3.

11.2. Liquid Waste

11.2.1. Liquid waste containing hazardous contaminants, such as solutions of trace metals, is accumulated in a coated glass jar in a secondary containment tray and is kept segregated from liquid waste contaminated with organic or radioactive substances or cyanide.

11.2.2. The bottle is labeled with a hazardous waste label and a label indicating its use for trace-metal waste.

11.2.3. The bottle is opened only for the period of time necessary to add waste to it.

11.2.4. When the bottle is full, it is capped and kept in the secondary containment tray pending pickup by the Waste Management Group.

11.2.5. A new bottle is labeled for further use.

11.3. Waste Pickup

11.3.1. Pickup by the Waste Management Group of solid waste or a full bottle of liquid waste containing trace metals is requested using the current Chemical Waste Disposal Request Form (CWDR). The current Waste Profile Request Form (WPRF) that describes the waste is referenced on the CWDR.

11.3.2. The Waste Management Group picks up the waste for disposal in accord with Laboratory policy.

12. Source Materials

12.1. Perkin-Elmer Corp., *Analytical Methods for Atomic Absorption Spectroscopy* (Norwalk, CT, 1976).

12.2. Perkin-Elmer Corp., *Instructions: Zeeman/5000 System* (Norwalk, CT, 1982).

12.3. U.S. Environmental Protection Agency, "Methods for Chemical Analysis of Water and Wastes," EPA-600/4-79-020 (rev. March 1983).

12.4. U.S. Environmental Protection Agency, "Test Methods for Evaluation of Solid Waste: Laboratory Manual of Physical and Chemical Methods," SW-846 (Nov. 1986).

12.5. "Chemical, Hazardous, and Mixed Waste," Administrative Requirement 10-3, Chapter 1 in Los Alamos National Laboratory *Environment, Safety, and Health Manual* (most recent edition).

CHROMIUM IN WATER AND SOIL EXTRACTS — GRAPHITE FURNACE AA

Analyte: Chromium	**Method No.:** EI135
Matrix: Water, waste water, and soil extracts	**Detection Limit:** 1.0 μg/L
Procedure: Graphite furnace atomic absorption	**Accuracy and Precision:** 94% ± 0.9% RSD
Effective Date: 09/25/91	**Authors:** Michael G. Bell Barbara J. Hemberger

SAFETY NOTE: Before beginning this procedure, read all of the Material Safety Data Sheets for the chemicals listed in Sec. 6. Read Sec. 4.3 of the EM-9 Safety Manual for information on personal protective clothing and equipment.

1. Principle of Method

1.1. This procedure is based on Environmental Protection Agency (EPA) method 218.2 and SW846 method 7190.

1.2. Chromium in solution may be readily determined by graphite furnace atomic absorption spectroscopy. The method is applicable to Cr in drinking, surface, and saline waters and in domestic and industrial wastes.

1.3. Drinking water free of particulate matter may be analyzed directly. Ground water, other aqueous samples, TCLP extracts, industrial wastes, soils, sludges, sediments, and other solid wastes require digestion before analysis.

2. Accuracy and Precision

2.1. The determination of chromium in 23 in-house quality control samples (18.6 μg/L) over an 8-month period had a mean of 17.4 and a relative standard deviation (RSD) of 0.9%.

3. Collection and Storage of Samples.

3.1. Preserve samples with nitric acid (HNO_3) at a pH <2.0. Complete analysis within 6 months.

4. Interferences

4.1. Contamination is of prime concern during sample preparation. Periodically clean the work area, including the bench top, to eliminate environmental contamination. Use acid-washed sample cups in the autosampler.

4.2. Chemical interferences can be controlled by the addition of a matrix modifier to all samples and standards. Refer to Perkin-Elmer chart 0993-8199 Rev. D (11/89), or to the PE Methods of Analysis for AAS for the appropriate matrix modifier.

4.3. Silica from the glassware will grow into the sample solution during and following sample processing. To control this problem, use disposable sterile 50-mL polypropylene centrifuge tubes in the sample digestion steps.

5. Apparatus

5.1. Centrifuge tubes: 50-mL, sterile prolypropylene.

5.2. Rainin pipettes with disposable tips.

5.3. Wash bottles: 125-mL, polypropylene, screw tops.

5.4. Hot plate: with aluminum heating block drilled to hold centrifuge tubes.

5.5. Perkin-Elmer 5000 atomic absorption instrument: equipped with a Zeeman graphite furnace or equivalent.

5.6. Required gas for the above instrument is ultrapure argon.

6. Reagents

6.1. Nitric acid (low-temperature redistilled acid, LTRD).

6.2. Hydrochloric acid (low-temperature redistilled acid, LTRD).

6.3. Double-deionized water.

6.4. ASTM Type I water (>10 MΩ/cm resistivity, <0.1 μmho/cm conductivity).

6.5. Appropriate matrix modifier for all samples, standards, and QC's.

7. Sample Preparation Procedure

7.1. To determine total recoverable elements in water, waste water, and soil extracts, take a 50-mL aliquot from an acid-preserved sample containing not more than

0.25% (wt/vol) total solids. Place the aliquot in a sterile 50-mL disposable polypropylene centrifuge tube.

7.1.1. Add 500 μL of LTRD HNO_3 and 250 μL of Ultrex or LTRD HCl to each sample.

7.1.2. Heat on a hot plate without boiling (approximately 85°C) until the volume is reduced to 5-10 mL.

7.1.3. Loosely cover the tube with the cap and reflux for 30 min.

7.1.4. Allow the sample to cool, and dilute to 50 mL with ASTM Type I water.

7.1.5. Run one digested blank and one digested spike for each digested batch.

7.1.6. Run a duplicate and a spike for 10-20% of the samples.

7.1.7. For TCLP samples, run a spike for every sample and 20% duplicates.

7.1.8. The analysis should be performed before the EPA regulatory holding times expire.

7.1.9. Add sample and standards to acid-cleaned sample cups.

8. Instrument Procedure

8.1. Instrument power and gases check.

8.1.1. Turn the **POWER SWITCH** to the PE5000 Atomic Absorption (AA) to **ON**.

8.1.2. Turn **ON** the argon supply valve after checking the pressure at the tank. Pressure must be over 100 psi or the tank must be changed.

8.1.3. Turn the AA switch from **STANDBY** mode to **RUN**.

8.1.4. Make sure the exhaust hood over the graphite furnace is functioning.

8.2. Instrument setup.

8.2.1. Insert the chromium lamp into the turret facing ETVAA and plug it in.

8.2.2. Enter **turret lamp number** into keyboard.

8.2.3. Enter recommended **lamp milliamps** (mA) or **watts** depending on lamp type (EDL/HCL).

8.2.3.1. Warm up the EDL and/or HCL lamp for at least 20 min.

8.2.4. Enter **lamp slit width** using **LOW SLIT** key for ETVAA.

8.2.5. Enter **lamp wavelength** using **LAMBDA PEAK** key.

8.2.6. Turn AA switch inside lamp housing to **ICP/ZAA** position.

8.3. Keyboard setup.

8.3.1. Set **SIGNAL** key to **PK AREA** (peak area).

8.3.2. Turn **REC ABS** (record absorbance) signal key **ON**.

8.3.3. Enter **AVG** (average) number (if used).

8.3.4. Enter **CONC MODE** (concentration).

8.4. Furnace setup.

8.4.1. Press **ZAA** key.

8.4.2. Turn **ACCESSORY** knob to **ON** position.

8.4.3. Turn chiller **ON** and check that the water level is above the coils.

8.4.4. Check that the water bottle for distilled water rinse on the autosampler is full.

8.4.5. Turn **ON** the HGA-500 programmer.

8.4.5.1. Enter the temperature program for the element from the ETVAA procedure manual and store the procedure number.

8.5. Computer setup.

8.5.1. Turn PE AA Data System 10 computer **master switch** to **ON**.

8.5.2. Set up ID/WT file.

8.5.3. Turn **print button** on PE5000 keyboard **ON** and store the program.

8.6. Set up autosampler.

8.6.1. Recalibrate the standard curve every 8 to 12 samples.

8.6.2. Enter the number of standards (# stds).

8.6.3. Enter the last sample number (last samp).

8.6.4. Enter the sample volume (samp vol).

8.6.5. Enter the alternate volume (alt vol) for the matrix modifier if used.

8.6.6. Enter the instrument program number (inst prog).

8.6.7. Enter the HGA program number (HGA prog).

8.7. Graphite furnace setup.

8.7.1. Open the furnace and clean or replace the graphite tube. Use the tube with or without the platform depending on the element.

8.7.2. If inserting a new tube, condition it with the manual temperature key.

8.7.3. Using the alignment tool, reinsert the graphite tube and close the furnace.

8.7.4. Using the manual temperature key, set the pyrometer to the atomization temperature of the element and balance the lights (red/green) using the calibration (CAL) knob.

8.7.5. Place the AS40 in **STANDBY** mode and align the autosampler arm. Check the depth of sample delivery inside tube and inside samples. Exit **STANDBY** mode.

8.7.6. Remove and check the furnace lenses. Reinsert the lenses and check the absorbance. If the absorbance reads above 0.1, clean the lenses.

8.7.7. Put samples and standards into the autosampler tray and cover with the dust cover to prevent contamination.

8.7.8. Put the matrix modifier in the holder position, if required.

8.7.9. Check the blank and standards manually.

8.7.10. Calculate the characteristic concentration (cc). If it is within ±20% of chart value start the run.

8.7.11. Enter **collect data** mode on PE Data System 10 computer and follow instructions.

8.7.12. After run is complete, press to **DISK** on PE Data System 10 **twice**.

8.7.13. Select **report** mode on the computer, follow instructions, and print out the final report.

8.7.14. When finished, shut off the chiller, argon gas supply, lamps, EDL power supply, and computer.

8.7.15. Place the autosampler, HGA Programmer, and PE5000 in standby mode.

9. Emergency Shutdown Procedure

9.1. In case of power failure, turn **POWER SWITCH** on PE5000 AA to **OFF**.

9.2. **Turn off the gas valves.**

9.3. Follow building power failure procedures.

10. Calculations

10.1. Characteristic concentration (cc).

$$cc = \frac{C \times V \times 0.0044}{A_s},$$

where cc = characteristic concentration for ETVAA,
C = concentration of standard (μg/L),
V = sample aliquot (μL),
A_s = absorbance of standard, and
0.0044 = 1% absorbance.

11. Source Material

11.1. *Analytical Methods for Atomic Absorption Spectrophotometry*, (Perkin-Elmer, Norwalk, Conn., 1976).

11.2. *Instructions: Zeeman/5000 System*, (Perkin-Elmer, Norwalk, Conn., 1982).

11.3. Methods for Chemical Analysis of Water and Wastes, EPA-600/4-79-020 U.S. Envrionmental Protection Agency, (rev. March 1983).

11.4. Perkin-Elmer chart 0993-8199 Rev. D (11/89).

11.5. "Test Methods for Evaluation of Solid Waste Laboratory Manual of Physical and Chemical Methods," EPA report no. SW-846 (November 1986).

COPPER IN WATER AND SOIL EXTRACTS — FLAME AA

Analyte: Copper	**Method No.:** EI140
Matrix: Water, waste water, and soil extracts	**Detection Limit:** 10 μg/L
Procedure: Flame atomic absorption	**Accuracy and Precision:** 100% ± 2.1% RSD
Effective Date: 09/23/91	**Authors:** Michael G. Bell Barbara J. Hemberger

SAFETY NOTE: Before beginning this procedure, read all of the Material Safety Data Sheets for the chemicals listed in Sec. 6. Read Sec. 4.3 of the EM-9 Safety Manual for information on personal protective clothing and equipment. Read Sec. 11 of this procedure and Source Material 12.5 for proper waste disposal practices.

1. Principle of Method

1.1. This procedure is based on Environmental Protection Agency (EPA) method 220.1 and SW-846 method 7210.

1.2. Copper in solution may be readily determined by atomic absorption spectroscopy (AAS). The method is simple and rapid and is applicable to Cu in drinking, surface, and saline waters and in domestic and industrial wastes.

1.3. Drinking water free of particulate matter may be analyzed directly. Ground water, other aqueous samples, TCLP extracts, industrial wastes, soils, sludges, sediments, and other solid wastes require digestion prior to analysis.

2. Accuracy and Precision

2.1. The determination of copper in 20 in-house quality control samples (21.9 μg/L) over a 9-month period had a mean of 21.2 μg/L and a relative standard deviation (RSD) of 2.1%.

3. Collection and Storage of Samples

3.1. Preserve samples with nitric acid (HNO_3) at a pH <2.0. Complete analysis within six months.

4. Interferences

4.1. Contamination is of prime concern during sample preparation. The work area, including the bench top, should be periodically cleaned to eliminate environmental contamination.

4.2. Chemical interferences are matrix dependent.

4.3. Silica from the glassware will grow into the sample solution during and following sample processing. Use sterile disposable 50-mL polypropylene centrifuge tubes in the sample digestion steps to control this problem.

5. Apparatus

5.1. Centrifuge tubes: 50-mL, sterile polypropylene.

5.2. Rainin pipettes with disposable tips.

5.3. Wash bottles: 125-mL, polypropylene, screw tops.

5.4. Hot plate: with aluminum heating block drilled to hold centrifuge tubes.

5.5. Perkin-Elmer 5000 atomic absorption spectrometer or equivalent.

5.6. Gases for the above instrument: air, acetylene, nitrous oxide, argon.

6. Reagents

6.1. Nitric acid (low-temperature redistilled acid, LTRD).

6.2. Hydrochloric acid (low-temperature redistilled acid, LTRD).

6.3. Double-deionized water.

6.4. ASTM Type I water (>10 MΩ/cm resistivity, <0.1 μmho/cm conductivity).

7. Sample Preparation Procedure

7.1. To determine total recoverable elements in water or waste water, take a 50-mL aliquot from an acid-preserved sample containing not more than 0.25% (wt/vol) total solids. Place the aliquot in a sterile disposable 50-mL polypropylene centrifuge tube.

7.1.1. Add 500 μL of LTRD HNO_3 and 250 μL of Ultrex or LTRD HCl to each sample.

7.1.2. Heat on a hot plate without boiling (approximately 85°C) until the final volume is reduced to 5-10 mL.

7.1.3. Loosely cover the tube with the cap and reflux for 30 min.

7.1.4. Allow the sample to cool and dilute to 50 mL with ASTM Type I water.

7.1.5. Run one digested blank and one digested spike with each digested batch.

7.1.6. Run a duplicate and a spike for 10-20% of the samples.

7.1.7. For TCLP samples, run a spike for every sample and run 20% duplicates.

8. Instrument Procedure

8.1. Power instrument and check gases.

8.1.1. Turn the **POWER** switch on the Perkin-Elmer (PE) 5000 atomic absorption (AA) spectrometer to **ON**.

8.1.2. Turn the **POWER** switch on the PE 5000 automatic burner control to **ON**.

8.1.3. Turn the **AIR SUPPLY** valve **ON**.

8.1.4. Check the pressure in the acetylene tank; if it is <100 psi, change the tank. Turn the **ACETYLENE SUPPLY** valve **ON**.

8.1.5. Turn the **NITROUS OXIDE SUPPLY** valve **ON**, if necessary.

8.1.6. Turn the AA switch from **STANDBY** mode to **RUN**.

8.1.7. Make sure the exhaust hood is functioning.

8.1.8. Make sure the fluids in the drain vessel and drain loop are at their proper levels.

8.2. Instrument setup.

8.2.1. Insert the copper lamp in the turret and plug it in.

8.2.2. Enter the **turret lamp number** on the keyboard.

8.2.3. Enter the recommended **lamp milliamps** (mA).

8.2.4. Enter the **lamp slit width** using the **HIGH SLIT** key for flame AA.

8.2.5. Enter the **lamp wavelength** using the **LAMBDA PEAK** key.

8.2.6. For **signal keys**, enter the **CONTINUOUS** key for setup.

8.2.7. Press the **RECORD ABSORBANCE** key.

8.2.8. Set the **MODE** key to **ABSORBANCE.**

8.2.9. If the wavelength is >300 nm, use the **AA-MODE** key.

8.2.10. If the wavelength is <300 nm, use the **AA-BG MODE** key.

8.2.11. Press the **SETUP** key and adjust the lamp for maximum absorbance.

8.2.11.1. If the absorbance is >80, press the **GAIN** key and continue the lamp adjustment.

8.2.11.2. When the maximum absorbance is reached, turn the **SETUP** key to **OFF.**

8.2.12. Set the **TIME** key to 0.5 s.

8.2.13. Press the **AZ** (autozero) key. Absorbance should read zero.

8.2.14. Install the 10-cm burner head for air-acetylene analysis and the 5-cm head for nitrous oxide-acetylene.

8.2.15. Adjust the burner head height.

8.2.16. Set oxidant and acetylene flow from Table 8.2 in PE *Analytical Methods for AAS.* (source material 12.1).

8.2.17. Shut the burner shield door and light the flame using the flame **ON/OFF** key on the burner assembly.

8.2.18. Aspirate double-deionized water while the flame is lit.

8.2.19. Aspirate the standard and adjust the instrument for maximum absorbance.

8.3. Running samples.

8.3.1. Enter S1, S2, and S3 as directed for standards in *Analytical Methods for AAS.*

8.3.2. Reset **TIME** key to 3 to 6 s.

8.3.3. Press the signal **HOLD** key.

8.3.4. Select **AVERAGE** key if desired.

8.3.5. Aspirate the known standard and press the **READ** key.

8.3.6. Calculate the characteristic concentration (cc). The result should be within ±20% of the value in *Analytical Methods for AAS*.

8.3.7. Aspirate the calibration-curve standards and read the absorbance.

8.3.8. Switch the **MODE** key to **CONC** (concentration).

8.3.9. Aspirate the standards to set concentration keys as needed.

8.3.10. Read samples and QCs (blind and known).

8.3.11. Recalibrate the instrument with standards every 8 to 12 readings.

8.3.12. When finished, switch the flame **ON/OFF** key to **OFF**. Press the **CHECK FLOW** key on the auto burner control twice to relieve line pressure.

8.3.13. Turn the **POWER** switch on the automatic burner control to **OFF**.

8.3.14. Switch the PE 5000 to **STANDBY** mode.

9. Emergency Shutdown Procedure

9.1. In case of power failure, turn the **POWER** switch on the PE 5000 to **OFF**.

9.2. Turn the gas valves **OFF**.

9.3. Follow procedures for building power failure.

10. Calculations

10.1. Characteristic concentration (cc).

$$cc = \frac{C \times 0.0044}{A_s},$$

where cc = characteristic concentration for flame AA,
C = concentration of standard,
0.0044 = 1% absorbance, and
A_s = absorbance of standard.

11. Proper Waste Disposal Practices

11.1. Solid Waste

11.1.1. Solid waste contaminated with hazardous chemicals above the level of concern is not generated during the routine preparation of QC samples for analysis for inorganic contaminants.

11.1.2. If a solid waste is generated that may be contaminated at a level of concern, the appropriate paperwork is completed on a case-by-case basis.

11.1.2.1. A Waste Profile Request Form (WPRF) describing the solid waste is completed and sent to the Waste Management Group for review.

11.1.2.2. If the Waste Management Group determines that the solid waste is contaminated below the level of concern, the waste is disposed of as ordinary laboratory trash.

11.1.2.3. If the Waste Management Group determines that the solid waste is contaminated above the level of concern, pickup of the contaminated waste is requested as described in Sec. 9.3.

11.2. Liquid Waste

11.2.1. Liquid waste containing hazardous contaminants, such as solutions of trace metals, is accumulated in a coated glass jar in a secondary containment tray and is kept segregated from liquid waste contaminated with organic or radioactive substances or cyanide.

11.2.2. The bottle is labeled with a hazardous waste label and a label indicating its use for trace-metal waste.

11.2.3. The bottle is opened only for the period of time necessary to add waste to it.

11.2.4. When the bottle is full, it is capped and kept in the secondary containment tray pending pickup by the Waste Management Group.

11.2.5. A new bottle is labeled for further use.

11.3. Waste Pickup

11.3.1. Pickup by the Waste Management Group of solid waste or a full bottle of liquid waste containing trace metals is requested using the current Chemical Waste Disposal Request Form (CWDR). The current Waste

Profile Request Form (WPRF) that describes the waste is referenced on the CWDR.

11.3.2. The Waste Management Group picks up the waste for disposal in accord with Laboratory policy.

12. Source Materials

12.1. Perkin-Elmer Corp., *Analytical Methods for Atomic Absorption Spectroscopy* (Norwalk, CT, 1976).

12.2. Perkin-Elmer Corp., *Instructions: Zeeman/5000 System* (Norwalk, CT, 1982).

12.3. U.S. Environmental Protection Agency, "Methods for Chemical Analysis of Water and Wastes," EPA-600/4-79-020 (rev. March 1983).

12.4. U.S. Environmental Protection Agency, "Test Methods for Evaluation of Solid Waste: Laboratory Manual of Physical and Chemical Methods," SW-846 (Nov. 1986).

12.5. "Chemical, Hazardous, and Mixed Waste," Administrative Requirement 10-3, Chapter 1 in Los Alamos National Laboratory *Environment, Safety, and Health Manual* (most recent edition)

IRON IN WATER AND SOIL EXTRACTS — FLAME AA

Analyte: Iron	**Method No.:** EI145
Matrix: Water, waste water, and soil extracts	**Detection Limits:** 20 μg/L
Procedure: Flame atomic absorption	**Accuracy and Precision:** 100% ± 8.7% RSD
Effective Date: 09/23/91	**Authors:** Michael G. Bell Barbara J. Hemberger

SAFETY NOTE: Before beginning this procedure, read all of the Material Safety Data Sheets for the chemicals listed in Sec. 6. Read Sec. 4.3 of the EM-9 Safety Manual for information on personal protective clothing and equipment. Read Sec. 11 of this procedure and Source Material 12.5 for proper waste disposal practices.

1. Principle of Method

1.1. This procedure is based on Environmental Protection Agency (EPA) method 236.1 and SW-846 method 7380.

1.2. Iron in solution may be readily determined by atomic absorption spectroscopy (AAS). The method is simple and rapid and is applicable to Fe in drinking, surface, and saline waters and in domestic and industrial wastes.

1.3. Drinking water free of particulate matter may be analyzed directly. Ground water, other aqueous samples, TCLP extracts, industrial wastes, soils, sludges, sediments, and other solid wastes require digestion prior to analysis.

2. Accuracy and Precision

2.1. The determination of iron in 24 in-house quality control samples (99 μg/L) over a 9-month period had a mean of 107.3 μg/L and a relative standard deviation (RSD) of 8.7%.

3. Collection and Storage of Samples

3.1. Preserve samples with nitric acid (HNO_3) at a pH <2.0. Complete analysis within six months.

4. Interferences

4.1. Contamination is of prime concern during sample preparation. The work area, including the bench top, should be periodically cleaned to eliminate environmental contamination.

4.2. Chemical interferences are matrix dependent.

4.3. Silica from the glassware will grow into the sample solution during and following sample processing. Use sterile disposable 50-mL polypropylene centrifuge tubes in the sample digestion steps to control this problem.

5. Apparatus

5.1. Centrifuge tubes: 50-mL, sterile polypropylene.

5.2. Rainin pipettes with disposable tips.

5.3. Wash bottles: 125-mL, polypropylene, screw tops.

5.4. Hot plate: with aluminum heating block drilled to hold centrifuge tubes.

5.5. Perkin-Elmer 5000 atomic absorption spectrometer or equivalent.

5.6. Gases for the above instrument: air, acetylene, nitrous oxide, argon.

6. Reagents

6.1. Nitric acid (low-temperature redistilled acid, LTRD).

6.2. Hydrochloric acid (low-temperature redistilled acid, LTRD).

6.3. Double deionized water.

6.4. ASTM Type I water (>10 MΩ/cm resistivity, <0.1 μmho/cm conductivity).

7. Sample Preparation Procedure

7.1. To determine total recoverable elements in water or waste water, take a 50-mL aliquot from an acid-preserved sample containing not more than 0.25% (wt/vol) total solids. Place the aliquot in a sterile disposable 50-mL polypropylene centrifuge tube.

7.1.1. Add 500 μL of LTRD HNO_3 and 250 μL of Ultrex or LTRD HCl to each sample.

7.1.2. Heat on a hot plate without boiling (approximately 85°C) until the final volume is reduced to 5-10 mL.

7.1.3. Loosely cover the tube with the cap and reflux for 30 min.

7.1.4. Allow the sample to cool and dilute to 50 mL with ASTM Type I water.

7.1.5. Run one digested blank and one digested spike with each digested batch.

7.1.6. Run a duplicate and a spike for 10-20% of the samples.

7.1.7. For TCLP samples, run a spike for every sample and run 20% duplicates.

8. Instrument Procedure

8.1. Power instrument and check gases.

8.1.1. Turn the **POWER** switch on the Perkin-Elmer (PE) 5000 atomic absorption (AA) spectrometer to **ON**.

8.1.2. Turn the **POWER** switch on the PE 5000 automatic burner control to **ON**.

8.1.3. Turn the **AIR SUPPLY** valve **ON**.

8.1.4. Check the pressure in the acetylene tank; if it is <100 psi, change the tank. Turn the **ACETYLENE SUPPLY** valve **ON**.

8.1.5. Turn the **NITROUS OXIDE SUPPLY** valve **ON**, if necessary.

8.1.6. Turn the AA switch from **STANDBY** mode to **RUN**.

8.1.7. Make sure the exhaust hood is functioning.

8.1.8. Make sure the fluids in the drain vessel and drain loop are at their proper levels.

8.2. Instrument setup.

8.2.1. Insert the iron lamp in the turret and plug it in.

8.2.2. Enter the **turret lamp number** on the keyboard.

8.2.3. Enter the recommended **lamp milliamps** (mA).

8.2.4. Enter the **lamp slit width** using the **HIGH SLIT** key for flame AA.

8.2.5. Enter the **lamp wavelength** using the **LAMBDA PEAK** key.

8.2.6. For **signal keys**, enter the **CONTINUOUS** key for setup.

8.2.7. Press the **RECORD ABSORBANCE** key.

8.2.8. Set the **MODE** key to **ABSORBANCE.**

8.2.9. If the wavelength is >300 nm, use the **AA-MODE** key.

8.2.10. If the wavelength is <300 nm, use the **AA-BG MODE** key.

8.2.11. Press the **SETUP** key and adjust the lamp for maximum absorbance.

8.2.11.1. If the absorbance is >80, press the **GAIN** key and continue the lamp adjustment.

8.2.11.2. When the maximum absorbance is reached, turn the **SETUP** key to **OFF.**

8.2.12. Set the **TIME** key to 0.5 s.

8.2.13. Press the **AZ** (autozero) key. Absorbance should read zero.

8.2.14. Install the 10-cm burner head for air-acetylene analysis and the 5-cm head for nitrous oxide-acetylene.

8.2.15. Adjust the burner head height.

8.2.16. Set oxidant and acetylene flow from Table 8.2 in PE *Analytical Methods for AAS*. (source material 12.1).

8.2.17. Shut the burner shield door and light the flame using the flame **ON/OFF** key on the burner assembly.

8.2.18. Aspirate double-deionized water while the flame is lit.

8.2.19. Aspirate the standard and adjust the instrument for maximum absorbance.

8.3. Running samples.

8.3.1. Enter S1, S2, and S3 as directed for standards in *Analytical Methods for AAS*.

8.3.2. Reset **TIME** key to 3 to 6 s.

8.3.3. Press the signal **HOLD** key.

8.3.4. Select **AVERAGE** key if desired.

8.3.5. Aspirate the known standard and press the **READ** key.

8.3.6. Calculate the characteristic concentration (cc). The result should be within ±20% of the value in *Analytical Methods for AAS*.

8.3.7. Aspirate the calibration-curve standards and read the absorbance.

8.3.8. Switch the **MODE** key to **CONC** (concentration).

8.3.9. Aspirate the standards to set concentration keys as needed.

8.3.10. Read samples and QCs (blind and known).

8.3.11. Recalibrate the instrument with standards every 8 to 12 readings.

8.3.12. When finished, switch the flame **ON/OFF** key to **OFF**. Press the **CHECK FLOW** key on the auto burner control twice to relieve line pressure.

8.3.13. Turn the **POWER** switch on the automatic burner control to **OFF**.

8.3.14. Switch the PE 5000 to **STANDBY** mode.

9. Emergency Shutdown Procedure

9.1. In case of power failure, turn the **POWER** switch on the PE 5000 to **OFF**.

9.2. Turn the gas valves **OFF**.

9.3. Follow procedures for building power failure.

10. Calculations

10.1. Characteristic concentration (cc).

$$cc = \frac{C \times 0.0044}{A_s},$$

where cc = characteristic concentration for flame AA,
C = concentration of standard,
0.0044 = 1% absorbance, and
A_s = absorbance of standard.

11. Proper Waste Disposal Practices

11.1. Solid Waste

11.1.1. Solid waste contaminated with hazardous chemicals above the level of concern is not generated during the routine preparation of QC samples for analysis for inorganic contaminants.

11.1.2. If a solid waste is generated that may be contaminated at a level of concern, the appropriate paperwork is completed on a case-by-case basis.

11.1.2.1. A Waste Profile Request Form (WPRF) describing the solid waste is completed and sent to the Waste Management Group for review.

11.1.2.2. If the Waste Management Group determines that the solid waste is contaminated below the level of concern, the waste is disposed of as ordinary laboratory trash.

11.1.2.3. If the Waste Management Group determines that the solid waste is contaminated above the level of concern, pickup of the contaminated waste is requested as described in Sec. 9.3.

11.2. Liquid Waste

11.2.1. Liquid waste containing hazardous contaminants, such as solutions of trace metals, is accumulated in a coated glass jar in a secondary containment tray and is kept segregated from liquid waste contaminated with organic or radioactive substances or cyanide.

11.2.2. The bottle is labeled with a hazardous waste label and a label indicating its use for trace-metal waste.

11.2.3. The bottle is opened only for the period of time necessary to add waste to it.

11.2.4. When the bottle is full, it is capped and kept in the secondary containment tray pending pickup by the Waste Management Group.

11.2.5. A new bottle is labeled for further use.

11.3. Waste Pickup

11.3.1. Pickup by the Waste Management Group of solid waste or a full bottle of liquid waste containing trace metals is requested using the current Chemical Waste Disposal Request Form (CWDR). The current Waste

Profile Request Form (WPRF) that describes the waste is referenced on the CWDR.

11.3.2. The Waste Management Group picks up the waste for disposal in accord with Laboratory policy.

12. Source Materials

12.1. Perkin-Elmer Corp., *Analytical Methods for Atomic Absorption Spectroscopy* (Norwalk, CT, 1976).

12.2. Perkin-Elmer Corp., *Instructions: Zeeman/5000 System* (Norwalk, CT, 1982).

12.3. U.S. Environmental Protection Agency, "Methods for Chemical Analysis of Water and Wastes," EPA-600/4-79-020 (rev. March 1983).

12.4. U.S. Environmental Protection Agency, "Test Methods for Evaluation of Solid Waste: Laboratory Manual of Physical and Chemical Methods," SW-846 (Nov. 1986).

12.5. "Chemical, Hazardous, and Mixed Waste," Administrative Requirement 10-3, Chapter 1 in Los Alamos National Laboratory *Environment, Safety, and Health Manual* (most recent edition).

LEAD IN WATER AND SOIL EXTRACTS — GRAPHITE FURNACE AA

Analyte: Lead	**Method No.:** EI150
Matrix: Water, waste water, and soil extracts	**Detection Limit:** 2.0 μg/L
Procedure: Graphite furnace atomic absorption	**Accuracy and Precision:** 99.6% ± 1.0% RSD
Effective Date: 09/25/91	**Authors:** Michael G. Bell Barbara J. Hemberger

SAFETY NOTE: Before beginning this procedure, read all of the Material Safety Data Sheets for the chemicals listed in Sec. 6. Read Sec. 4.3 of the EM-9 Safety Manual for information on personal protective clothing and equipment.

1. Principle of Method

1.1. This procedure is based on Environmental Protection Agency (EPA) method 239.2 and SW846 method 7421.

1.2. Lead in solution may be readily determined by graphite furnace atomic absorption spectroscopy. The method is applicable to Pb in drinking, surface, and saline waters and in domestic and industrial wastes.

1.3. Drinking water free of particulate matter may be analyzed directly. Ground water, other aqueous samples, TCLP extracts, industrial wastes, soils, sludges, sediments, and other solid wastes require digestion before analysis.

2. Accuracy and Precision

2.1. The determination of lead in 12 in-house quality control samples (72.0 μg/L) over an 8-month period had a mean of 71.7 μg/L and a relative standard deviation (RSD) of 1.0%.

3. Collection and Storage of Samples

3.1. Preserve samples with nitric acid (HNO_3) at a pH <2.0. Complete analysis within 6 months.

4. Interferences

4.1. Contamination is of prime concern during sample preparation. Periodically clean the work area, including the bench top, to eliminate environmental contamination. Use acid-washed sample cups in the autosampler.

4.2. Chemical interferences can be controlled by the addition of a matrix modifier to all samples and standards. Refer to Perkin Elmer chart 0993-8199 Rev. D (11/89), or to the PE Methods of Analysis for AAS for the appropriate matrix modifier.

4.3. Silica from the glassware will grow into the sample solution during and following sample processing. To control this problem, use disposable sterile 50-mL polypropylene centrifuge tubes in the sample digestion steps.

5. Apparatus

5.1. Centrifuge tubes: 50-mL, sterile polypropylene.

5.2. Rainin pipettes with disposable tips.

5.3. Wash bottles: 125-mL, polypropylene, screw tops.

5.4. Hot plate: with aluminum heating block drilled to hold centrifuge tubes.

5.5. Perkin-Elmer 5000 atomic absorption instrument: equipped with a Zeeman graphite furnace or equivalent.

5.6. Required gas for the above instrument is ultrapure argon.

6. Reagents

6.1. Nitric acid (low-temperature redistilled acid, LTRD).

6.2. Hydrochloric acid (low-temperature redistilled acid, LTRD).

6.3. Double-deionized water.

6.4. ASTM Type I water (>10 MΩ/cm resistivity, <0.1 μmho/cm conductivity).

6.5. Appropriate matrix modifier for all samples, standards, and QCs.

6.6. Secondary standards for making the appropriate standard curves.

7. Sample Preparation Procedure

7.1. To determine total recoverable elements in water, waste water, and soil extracts, take a 50-mL aliquot from an acid preserved sample containing not more than 0.25% (wt/vol) total solids. Place the aliquot in a sterile 50-mL disposable polypropylene centrifuge tube.

7.1.1. Add 500 μL of LTRD HNO_3 and 250 μL of Ultrex or LTRD HCl to each sample.

7.1.2. Heat on a hot plate without boiling (approximately 85°C) until the volume is reduced to 5-10 mL.

7.1.3. Loosely cover the tube with the cap and reflux for 30 min.

7.1.4. Allow the sample to cool, and dilute to 50 mL with ASTM Type I water.

7.1.5. Run one digested blank and one digested spike for each digested batch.

7.1.6. Run a duplicate and a spike for 10-20% of the samples.

7.1.7. For TCLP samples, run a spike for every sample and 20% duplicates.

7.1.8. The analysis should be performed before the EPA regulatory holding times expire.

7.1.9. Add sample and standards to acid-cleaned sample cups.

8. Instrument Procedure

8.1. Instrument power and gases check.

8.1.1. Turn the **POWER SWITCH** to the PE5000 Atomic Absorption (AA) to **ON**.

8.1.2. Turn **ON** the argon supply valve after checking the pressure at the tank. Pressure must be over 100 psi or the tank must be changed.

8.1.3. Turn the AA switch from **STANDBY** mode to **RUN**.

8.1.4. Make sure the exhaust hood over the graphite furnace is functioning.

8.2. Instrument setup.

8.2.1. Insert the lead lamp into the turret oriented toward the ETVAA and plug it in.

8.2.2. Enter **turret lamp number** into keyboard.

8.2.3. Enter recommended **lamp milliamps** (mA) or **watts** depending on lamp type (EDL/HCL).

8.2.3.1. Warm up the EDL and/or HCL lamp for at least 20 min.

8.2.4. Enter **lamp slit width** using **LOW SLIT** key for ETVAA.

8.2.5. Enter **lamp wavelength** using **LAMBDA PEAK** key.

8.2.6. Turn AA switch inside lamp housing to **ICP/ZAA** position.

8.3. Keyboard setup.

8.3.1. Set **SIGNAL** key to **PK AREA** (peak area).

8.3.2. Turn **REC ABS** (record absorbance) signal key **ON**.

8.3.3. Enter **AVG** (average) number (if used).

8.3.4. Enter **CONC MODE** (concentration).

8.4. Furnace setup.

8.4.1. Press **ZAA** key.

8.4.2. Turn **ACCESSORY** knob to **ON** position.

8.4.3. Turn chiller **ON** and check that the water level is above the coils.

8.4.4. Check that the water bottle for distilled water rinse on the autosampler is full.

8.4.5. Turn **ON** the HGA-500 programmer.

8.4.5.1. Enter the temperature program for the element from the ETVAA procedure manual and store the procedure number.

8.5. Computer setup.

8.5.1 Turn PE AA Data System 10 computer **master switch** to **ON**.

8.5.2 Set up ID/WT file.

8.5.3 Turn **print button** on PE5000 keyboard **ON** and store the program.

8.6. Set up autosampler.

8.6.1. Recalibrate the standard curve every 8 to 12 samples.

8.6.2. Enter the number of standards (# stds).

8.6.3. Enter the last sample number (last samp).

8.6.4. Enter the sample volume (samp vol).

8.6.5. Enter the alternate volume (alt vol) for the matrix modifier if used.

8.6.6. Enter the instrument program number (inst prog).

8.6.7. Enter the HGA program number (HGA prog).

8.7. Graphite furnace setup.

8.7.1. Open the furnace and clean or replace the graphite tube. Use the tube with or without the platform depending on the element.

8.7.2. If inserting a new tube, condition it with the manual temperature key.

8.7.3. Using the alignment tool, reinsert the graphite tube and close the furnace.

8.7.4. Using the manual temperature key, set the pyrometer to the atomization temperature of the element and balance the lights (red/green) using the calibration (CAL) knob.

8.7.5. Place the AS40 in **STANDBY** mode and align the autosampler arm. Check the depth of the sample delivery inside the tube and inside the samples. Exit **STANDBY** mode.

8.7.6. Remove and check the furnace lenses. Reinsert the lenses and check the absorbance. If the absorbance reads above 0.100, clean the lenses.

8.7.7. Put samples and standards into the autosampler tray and cover with the dust cover to prevent contamination.

8.7.8. Put the matrix modifier in the holder position, if required.

8.7.9. Check the blank and standards manually.

8.7.10. Calculate the characteristic concentration (cc). If it is within ±20% of chart value (0993-8199 Rev. D 11/89) start the run.

8.7.11. Enter **collect data** mode on PE Data System 10 computer and follow instructions.

8.7.12. After run is complete, press **DISK** key on PE Data System 10 **twice**.

8.7.13. Select **report** mode on the computer, follow instructions, and print out the final report.

8.7.14. When finished, shut off the chiller, argon gas supply, lamps, EDL power supply, and computer.

8.7.15. Place the autosampler, HGA Programmer, and PE5000 in standby mode.

9. Emergency Shutdown Procedure

9.1. In case of power failure, turn **POWER SWITCH** on PE5000 AA to **OFF**.

9.2. Turn **off** the **gas valves**.

9.3. Follow building power failure procedures.

10. Calculations

10.1. Characteristic concentration (cc).

$$cc = \frac{C \times V \times 0.0044}{A_s},$$

where cc = characteristic concentration for ETVAA,
C = concentration of standard (μg/L),
V = sample aliquot (μL),
A_s = absorbance of standard, and
0.0044 = 1% absorbance.

11. Source Material

11.1. *Analytical Methods for Atomic Absorption Spectrophotometry*, (Perkin-Elmer, Norwalk, Conn., 1976).

11.2. *Instructions: Zeeman/5000 System*, (Perkin-Elmer, Norwalk, Conn., 1982).

11.3. Methods for Chemical Analysis of Water and Wastes, EPA-600/4-79-020 U.S. Environmental Protection Agency, (rev. March 1983).

11.4. Perkin-Elmer chart 0993-8199 Rev. D (11/89).

11.5. "Test Methods for Evaluation of Solid Waste: Laboratory Manual of Physical and Chemical Methods," EPA report no. SW-846 (November 1986).

MAGNESIUM IN WATER AND SOIL EXTRACTS — FLAME AA

Analyte: Magnesium	**Method No.:** EI160
Matrix: Water, waste water, and soil extracts	**Detection Limit:** 250 μg/L
Procedure: Flame atomic absorption	**Accuracy and Precision:** not determined
Effective Date: 09/23/91	**Authors:** Michael G. Bell Barbara J. Hemberger

SAFETY NOTE: Before beginning this procedure, read all of the Material Safety Data Sheets for the chemicals listed in Sec. 6. Read Sec. 4.3 of the EM-9 Safety Manual for information on personal protective clothing and equipment. Read Sec. 11 of this procedure and Source Material 12.5 for proper waste disposal practices.

1. Principle of Method

1.1. This procedure is based on Environmental Protection Agency (EPA) method 242.1 and SW-846 method 7050.

1.2. Magnesium in solution may be readily determined by atomic absorption spectroscopy. The method is simple and rapid and is applicable to Mg in drinking, surface, and saline waters and in domestic and industrial wastes.

1.3. Drinking water free of particulate matter may be analyzed directly. Ground water, other aqueous samples, TCLP extracts, industrial wastes, soils, sludges, sediments, and other solid wastes require digestion prior to analysis.

2. Accuracy and Precision

2.1. The accuracy and precision of the method for in-house quality control samples has not yet been determined.

3. Collection and Storage of Samples

3.1. Preserve samples with nitric acid (HNO_3) at a pH <2.0. Complete analysis within six months.

4. Interferences

4.1. Contamination is of prime concern during sample preparation. The work area, including the bench top, should be periodically cleaned to eliminate environmental contamination.

4.2. Chemical interferences can be controlled by the addition of KCl, a matrix modifier, to all samples and standards at high concentration levels (0.1%).

4.3. Silica from the glassware will grow into the sample solution during and following sample processing. Use sterile disposable 50-mL polypropylene centrifuge tubes in the sample digestion steps to control this problem.

5. Apparatus

5.1. Centrifuge tubes: 50-mL, sterile polypropylene.

5.2. Rainin pipettes with disposable tips.

5.3. Wash bottles: 125-mL, polypropylene, screw tops.

5.4. Hot plate: with aluminum heating block drilled to hold centrifuge tubes.

5.5. Perkin-Elmer 5000 atomic absorption spectrometer or equivalent.

5.6. Gases for the above instrument: air, acetylene, nitrous oxide, argon.

6. Reagents

6.1. Nitric acid (low-temperature redistilled acid, LTRD).

6.2. Hydrochloric acid (low-temperature redistilled acid, LTRD).

6.3. Double-deionized water.

6.4. Potassium chloride. Matrix modifier for all samples and standards.

6.5. ASTM Type I water (>10 MΩ/cm resistivity, <0.1 μmho/cm conductivity).

7. Sample Preparation Procedure

7.1. To determine total recoverable elements in water or waste water, take a 50-mL aliquot from an acid-preserved sample containing not more than 0.25% (wt/vol) total solids. Place the aliquot in a sterile disposable 50-mL polypropylene centrifuge tube.

7.1.1. Add 500 μL of LTRD HNO_3 and 250 μL of Ultrex or LTRD HCl to each sample.

7.1.2. Heat on a hot plate without boiling (approximately 85°C) until the final volume is reduced to 5-10 mL.

7.1.3. Loosely cover the tube with the cap and reflux for 30 min.

7.1.4. Allow the sample to cool and dilute to 50 mL with ASTM Type I water.

7.1.5. Run one digested blank and one digested spike with each digested batch.

7.1.6. Run a duplicate and a spike for 10-20% of the samples.

7.1.7. For TCLP samples, run a spike for every sample and run 20% duplicates.

8. Instrument Procedure

8.1. Power instrument and check gases.

8.1.1. Turn the **POWER** switch on the Perkin-Elmer (PE) 5000 atomic absorption (AA) spectrometer to **ON**.

8.1.2. Turn the **POWER** switch on the PE 5000 automatic burner control to **ON**.

8.1.3. Turn the **AIR SUPPLY** valve **ON**.

8.1.4. Check the pressure in the acetylene tank; if it is <100 psi, change the tank. Turn the **ACETYLENE SUPPLY** valve **ON**.

8.1.5. Turn the **NITROUS OXIDE SUPPLY** valve **ON**, if necessary.

8.1.6. Turn the AA switch from **STANDBY** mode to **RUN**.

8.1.7. Make sure the exhaust hood is functioning.

8.1.8. Make sure the fluids in the drain vessel and drain loop are at their proper levels.

8.2. Instrument setup.

8.2.1. Insert the magnesium lamp in the turret and plug it in.

8.2.2. Enter the **turret lamp number** on the keyboard.

8.2.3. Enter the recommended **lamp milliamps** (mA).

8.2.4. Enter the **lamp slit width** using the **HIGH SLIT** key for flame AA.

8.2.5. Enter the **lamp wavelength** using the **LAMBDA PEAK** key.

8.2.6. For **signal keys**, enter the **CONTINUOUS** key for setup.

8.2.7. Press the **RECORD ABSORBANCE** key.

8.2.8. Set the **MODE** key to **ABSORBANCE.**

8.2.9. If the wavelength is >300 nm, use the **AA-MODE** key.

8.2.10. If the wavelength is <300 nm, use the **AA-BG MODE** key.

8.2.11. Press the **SETUP** key and adjust the lamp for maximum absorbance.

8.2.11.1. If the absorbance is >80, press the **GAIN** key and continue the lamp adjustment.

8.2.11.2. When the maximum absorbance is reached, turn the **SETUP** key to **OFF.**

8.2.12. Set the **TIME** key to 0.5 s.

8.2.13. Press the **AZ** (autozero) key. Absorbance should read zero.

8.2.14. Install the 10-cm burner head for air-acetylene analysis and the 5-cm head for nitrous oxide-acetylene.

8.2.15. Adjust the burner head height.

8.2.16. Set oxidant and acetylene flow from Table 8.2 in PE *Analytical Methods for AAS.* (source material 12.1).

8.2.17. Shut the burner shield door and light the flame using the flame **ON/OFF** key on the burner assembly.

8.2.18. Aspirate double-deionized water while the flame is lit.

8.2.19. Aspirate the standard and adjust the instrument for maximum absorbance.

8.3. Running samples.

8.3.1. Enter S1, S2, and S3 as directed for standards in *Analytical Methods for AAS.*

8.3.2. Reset **TIME** key to 3 to 6 s.

8.3.3. Press the signal **HOLD** key.

8.3.4. Select **AVERAGE** key if desired.

11. Proper Waste Disposal Practices

11.1. Solid Waste

11.1.1. Solid waste contaminated with hazardous chemicals above the level of concern is not generated during the routine preparation of QC samples for analysis for inorganic contaminants.

11.1.2. If a solid waste is generated that may be contaminated at a level of concern, the appropriate paperwork is completed on a case-by-case basis.

11.1.2.1. A Waste Profile Request Form (WPRF) describing the solid waste is completed and sent to the Waste Management Group for review.

11.1.2.2. If the Waste Management Group determines that the solid waste is contaminated below the level of concern, the waste is disposed of as ordinary laboratory trash.

11.1.2.3. If the Waste Management Group determines that the solid waste is contaminated above the level of concern, pickup of the contaminated waste is requested as described in Sec. 9.3.

11.2. Liquid Waste

11.2.1. Liquid waste containing hazardous contaminants, such as solutions of trace metals, is accumulated in a coated glass jar in a secondary containment tray and is kept segregated from liquid waste contaminated with organic or radioactive substances or cyanide.

11.2.2. The bottle is labeled with a hazardous waste label and a label indicating its use for trace-metal waste.

11.2.3. The bottle is opened only for the period of time necessary to add waste to it.

11.2.4. When the bottle is full, it is capped and kept in the secondary containment tray pending pickup by the Waste Management Group.

11.2.5. A new bottle is labeled for further use.

11.3. Waste Pickup

11.3.1. Pickup by the Waste Management Group of solid waste or a full bottle of liquid waste containing trace metals is requested using the current Chemical Waste Disposal Request Form (CWDR). The current Waste

8.3.5. Aspirate the known standard and press the **READ** key.

8.3.6. Calculate the characteristic concentration (cc). The result should be within ±20% of the value in *Analytical Methods for AAS*.

8.3.7. Aspirate the calibration-curve standards and read the absorbance.

8.3.8. Switch the **MODE** key to **CONC** (concentration).

8.3.9. Aspirate the standards to set concentration keys as needed.

8.3.10. Read samples and QCs (blind and known).

8.3.11. Recalibrate the instrument with standards every 8 to 12 readings.

8.3.12. When finished, switch the flame **ON/OFF** key to **OFF**. Press the **CHECK FLOW** key on the auto burner control twice to relieve line pressure.

8.3.13. Turn the **POWER** switch on the automatic burner control to **OFF**.

8.3.14. Switch the PE 5000 to **STANDBY** mode.

9. Emergency Shutdown Procedure

9.1. In case of power failure, turn the **POWER** switch on the PE 5000 to **OFF**.

9.2. Turn the gas valves **OFF**.

9.3. Follow procedures for building power failure.

10. Calculations

10.1. Characteristic concentration (cc).

$$cc = \frac{C \times 0.0044}{A_s},$$

where cc = characteristic concentration of flame AA,
C = concentration of standard,
0.0044 = 1% absorbance, and
A_s = absorbance of standard.

Profile Request Form (WPRF) which describes the waste is referenced on the CWDR.

11.3.2. The Waste Management Group picks up the waste for disposal in accord with Laboratory policy.

12. Source Materials

12.1. Perkin-Elmer Corp., *Analytical Methods for Atomic Absorption Spectroscopy* (Norwalk, CT, 1976).

12.2. Perkin-Elmer Corp., *Instructions: Zeeman/5000 System* (Norwalk, CT, 1982).

12.3. U.S. Environmental Protection Agency, "Methods for Chemical Analysis of Water and Wastes," EPA-600/4-79-020 (rev. March 1983).

12.4. U.S. Environmental Protection Agency, "Test Methods for Evaluation of Solid Waste: Laboratory Manual of Physical and Chemical Methods," SW-846 (Nov. 1986).

12.5. "Chemical, Hazardous, and Mixed Waste," Administrative Requirement 10-3, Chapter 1 in Los Alamos National Laboratory *Environment, Safety, and Health Manual* (most recent edition).

ZINC IN WATER AND SOIL EXTRACTS — FLAME AA

Analyte: Zinc	**Method No.:** EI165
Matrix: Water, waste water, and soil extracts	**Detection Limit:** 5.0 μg/L
Procedure: Flame atomic absorption	**Accuracy and Precision:** 100% ± 4.0% RSD
Effective Date: 09/23/91	**Authors:** Michael G. Bell Barbara J. Hemberger

SAFETY NOTE: Before beginning this procedure, read all of the Material Safety Data Sheets for the chemicals listed in Sec. 6. Read Sec. 4.3 of the EM-9 Safety Manual for information on personal protective clothing and equipment. Read Sec. 11 of this procedure and Source Material 12.5 for proper waste disposal practices.

1. Principle of Method

1.1. This procedure is based on Environmental Protection Agency (EPA) method 289.1 and SW-846 method 7950.

1.2. Zinc in solution may be readily determined by atomic absorption spectroscopy. The method is simple and rapid and is applicable to drinking, surface, and saline waters and in domestic and industrial wastes.

1.3. Drinking water free of particulate matter may be analyzed directly. Ground water, other aqueous samples, TCLP extracts, industrial wastes, soils, sludges, sediments, and other solid wastes require digestion before analysis.

2. Accuracy and Precision

2.1. The determination of zinc in nine in-house quality control samples (66 μg/L) over a nine-month period had a mean of 67.2 μg/L and a relative standard deviation (RSD) of 4.0%.

3. Collection and Storage of Samples

3.1. Preserve samples with nitric acid (HNO_3) at a pH <2.0. Complete analysis within six months.

4. Interferences

4.1. Contamination is of prime concern during sample preparation. The work area, including the bench top, should be periodically cleaned to eliminate environmental contamination.

4.2. Chemical interferences are matrix dependent.

4.3. Silica from glassware will grow into the sample solution during and following sample processing. Use sterile disposable 50-mL polypropylene centrifuge tubes in the sample digestion steps to control this problem.

5. Apparatus

5.1. Centrifuge tubes: 50-mL, sterile polypropylene.

5.2. Rainin pipettes with disposable tips.

5.3. Wash bottles: 125-mL, polypropylene, screw tops.

5.4. Hot plate: with aluminum heating block drilled to hold centrifuge tubes.

5.5. Perkin-Elmer 5000 atomic absorption spectrometer or equivalent.

5.6. Gases for the above instrument: air, acetylene, nitrous oxide, argon.

6. Reagents

6.1. Nitric acid (low-temperature redistilled acid, LTRD).

6.2. Hydrochloric acid (low-temperature redistilled acid, LTRD).

6.3. Double-deionized water.

6.4. ASTM Type I water (>10 MΩ/cm resistivity, <0.1 μmho/cm conductivity).

7. Sample Preparation Procedure

7.1. To determine total recoverable elements in water or waste water, take a 50-mL aliquot from an acid-preserved sample containing not more than 0.25% (wt/vol) total solids. Place the aliquot in a sterile disposable 50-mL polypropylene centrifuge tube.

7.1.1. Add 500 μL of LTRD HNO_3 and 250 μL of Ultrex or LTRD HCl to each sample.

7.1.2. Heat on a hot plate without boiling (approximately 85°C) until the final volume is reduced to 5-10 mL.

7.1.3. Loosely cover the tube with the cap and reflux for 30 min.

7.1.4. Allow the sample to cool and dilute to 50 mL with ASTM Type I water.

7.1.5. Run one digested blank and one digested spike with each digested batch.

7.1.6. Run a duplicate and a spike for 10-20% of the samples.

7.1.7. For TCLP samples, run a spike for every sample and run 20% duplicates.

8. Instrument Procedure

8.1. Power instrument and check gases.

8.1.1. Turn the **POWER** switch on the Perkin-Elmer (PE) 5000 atomic absorption (AA) spectrometer to **ON**.

8.1.2. Turn the **POWER** switch on the PE 5000 automatic burner control to **ON**.

8.1.3. Turn **ON** the air supply valve.

8.1.4. Check the pressure in the acetylene tank; if it is <100 psi, change the tank. Turn the **ACETYLENE SUPPLY** valve **ON**.

8.1.5. Turn **ON** the nitrous oxide supply valve, if necessary.

8.1.6. Turn the AA switch from **STANDBY** mode to **RUN**.

8.1.7. Make sure the exhaust hood is functioning.

8.1.8. Check the drain vessel and drain loop for fluid levels.

8.2. Instrument setup.

8.2.1. Insert the zinc lamp in the turret and plug it in.

8.2.2. Enter the **turret lamp number** on the keyboard.

8.2.3. Enter the recommended **lamp milliamps** (mA).

8.2.4. Enter the **lamp slit width** using the **HIGH SLIT** key for flame AA.

8.2.5. Enter the **lamp wavelength** using the **LAMBDA PEAK** key.

8.2.6. For **signal keys**, enter the **CONTINUOUS** key for setup.

8.2.7. Press the **RECORD ABSORBANCE** key.

8.2.8. Set the **MODE** key to **ABSORBANCE**.

8.2.9. If the wavelength is >300 nm, use the **AA-MODE** key.

8.2.10. If the wavelength is <300 nm, use the **AA-BG MODE** key.

8.2.11. Press the **SETUP** key and adjust the lamp for maximum absorbance.

8.2.11.1. If the absorbance is >80, press the **GAIN** key and continue the lamp adjustment.

8.2.11.2. When the maximum absorbance is reached, turn the **SETUP** key to **OFF**.

8.2.12. Set the **TIME** key to 0.5 s.

8.2.13. Press the **AZ** (autozero) key. Absorbance should read zero.

8.2.14. Install the 10-cm burner head for air-acetylene analysis and the 5-cm head for nitrous oxide-acetylene.

8.2.15. Adjust the burner head height.

8.2.16. Set oxidant and acetylene flow from Table 8.2 in PE *Analytical Methods for AAS*. (source material 12.1).

8.2.17. Shut the burner shield door and light the flame using the flame **ON/OFF** key on the burner assembly.

8.2.18. Aspirate double-deionized water while the flame is lit.

8.2.19. Aspirate the standard and adjust the instrument for maximum absorbance.

8.3. Running samples.

8.3.1. Enter S1, S2, and S3 as directed for standards in *Analytical Methods for AAS*.

8.3.2. Reset **TIME** key to 3 to 6 s.

8.3.3. Press the signal **HOLD** key.

8.3.4. Select **AVERAGE** key if desired.

8.3.5. Aspirate the known standard and press the **READ** key.

8.3.6. Calculate the characteristic concentration (cc). The result should be within ±20% of the value in *Analytical Methods for AAS*.

8.3.7. Aspirate the calibration-curve standards and read the absorbance.

8.3.8. Switch the **MODE** key to **CONC** (concentration).

8.3.9. Aspirate the standards to set concentration keys as needed.

8.3.10. Read samples and QCs (blind and known).

8.3.11. Recalibrate the instrument with standards every 8 to 12 readings.

8.3.12. When finished, press flame **ON/OFF** key to **OFF** to turn off the flame. Turn fuel and air values to **OFF**.

8.3.12.1. Press the **CHECK FLOW** key **twice** on the auto burner control to relieve line pressure.

8.3.13. Turn the power switch to the auto burner control off.

8.3.14. Switch the PE 5000 to **STANDBY** mode.

9. Emergency Shutdown Procedure

9.1. In case of power failure, turn the **POWER** switch on the PE 5000 to **OFF**.

9.2. Turn off the gas valves.

9.3. Follow procedures for building power failure.

10. Calculations

10.1. Characteristic concentration (cc).

$$cc = \frac{C \times 0.0044}{A_s},$$

where cc = characteristic concentration for flame AA,
C = concentration of standard,
0.0044 = 1% absorbance, and
A_s = absorbance of standard.

11. Proper Waste Disposal Practices

11.1. Solid waste.

11.1.1. Solid waste contaminated with hazardous chemicals above the level of concern is not normally generated during the routine preparation of QC samples for analysis for inorganic contaminants.

11.1.2. If a solid waste is generated that may be contaminated at a level of concern, the appropriate paperwork is completed on a case-by-case basis.

11.1.2.1. A Waste Profile Request Form (WPRF) describing the solid waste is completed and sent to the Waste Management group for review.

11.1.2.2. If the Waste Management group determines that the solid waste is contaminated below the level of concern, the waste is disposed of as ordinary laboratory trash.

11.1.2.3. If the Waste Management group determines that the solid waste is contaminated above the level of concern, pickup of the contaminated waste is requested as described in Sec. 11.3.

11.2. Liquid waste.

11.2.1. Liquid waste containing hazardous contaminants, such as solutions of trace metals, is accumulated in a coated glass jar in a secondary containment tray and is kept segregated from liquid waste contaminated with organic or radioactive substances or cyanide.

11.2.2. The bottle is labeled with a hazardous waste label and a label indicating its use for trace-metal waste.

11.2.3. The bottle is opened only for the time necessary to add waste to it.

11.2.4. When the bottle is full, it is capped and kept in the secondary containment tray pending pickup by the Waste Management group.

11.2.5. A new bottle is labeled for further use.

11.3. Waste pickup.

11.3.1. Pickup by the Waste Management group of solid waste or a full bottle of liquid waste containing trace metals is requested using the current Chemical Waste Disposal Request Form (CWDR). The current Waste

Profile Request Form (WPRF) that describes the waste is referenced on the CWDR.

11.3.2. The Waste Management group picks up the waste for disposal in accord with Laboratory policy.

12. Source Materials

12.1. Perkin-Elmer Corp., *Analytical Methods for Atomic Absorption Spectroscopy* (Norwalk, CT, 1976).

12.2. Perkin-Elmer Corp., *Instructions: Zeeman/5000 System* (Norwalk, CT, 1982).

12.3. U.S. Environmental Protection Agency, "Methods for Chemical Analysis of Water and Wastes," EPA-600/4-79-020 (rev. March 1983).

12.4. U.S. Environmental Protection Agency, "Test Methods for Evaluation of Solid Waste: Laboratory Manual of Physical and Chemical Methods," SW-846 (Nov. 1986).

12.5. "Chemical, Hazardous, and Mixed Waste," Administrative Requirement 10-3, Chapter 1 in Los Alamos National Laboratory *Environment, Safety, and Health Manual* (most recent edition).

NICKEL IN WATER AND SOIL EXTRACTS — FLAME AA

Analyte: Nickel	**Method No.:** EI170
Matrix: Water, waste water, and soil extracts	**Detection Limit:** 15μg/L
Procedure: Flame atomic absorption	**Accuracy and Precision:** 100% ± 5% RSD
Effective Date: 09/23/91	**Authors:** Michael G. Bell Barbara J. Hemberger

SAFETY NOTE: Before beginning this procedure, read all of the Material Safety Data Sheets for the chemicals listed in Sec. 6. Read Sec. 4.3 of the EM-9 Safety Manual for information on personal protective clothing and equipment. Read Sec. 11 of this procedure and Source Material 12.5 for proper waste disposal practices.

1. Principle of Method

1.1. This procedure is based on Environmental Protection Agency (EPA) method 249.1 and SW-846 method 7520.

1.2. Nickel in solution may be readily determined by atomic absorption spectroscopy (AAS). The method is simple and rapid and is applicable to Ni in drinking, surface, and saline waters and in domestic and industrial wastes.

1.3. Drinking water free of particulate matter may be analyzed directly. Ground water, other aqueous samples, TCLP extracts, industrial wastes, soils, sludges, sediments, and other solid wastes require digestion prior to analysis.

2. Accuracy and Precision

2.1. The determination of nickel in 15 in-house quality control samples (800 μg/L) over a 9-month period had a mean of 841 μg/L and a relative standard deviation (RSD) of 5%.

3. Collection and Storage of Samples

3.1. Preserve samples with nitric acid (HNO_3) at a pH <2.0. Complete analysis within six months.

4. Interferences

4.1. Contamination is of prime concern during sample preparation. The work area, including the bench top, should be periodically cleaned to eliminate environmental contamination.

4.2. Chemical interferences are matrix dependent.

4.3. Silica from the glassware will grow into the sample solution during and following sample processing. Use sterile disposable 50-mL polypropylene centrifuge tubes in the sample digestion steps to control this problem.

5. Apparatus

5.1. Centrifuge tubes: 50-mL, sterile polypropylene.

5.2. Rainin pipettes with disposable tips.

5.3. Wash bottles: 125-mL, polypropylene, screw tops.

5.4. Hot plate: with aluminum heating block drilled to hold centrifuge tubes.

5.5. Perkin-Elmer 5000 atomic absorption spectrometer or equivalent.

5.6. Gases for the above instrument: air, acetylene, nitrous oxide, argon.

6. Reagents

6.1. Nitric acid (low-temperature redistilled acid, LTRD).

6.2. Hydrochloric acid (low-temperature redistilled acid, LTRD).

6.3. Double-deionized water.

6.4. ASTM Type I water (>10 MΩ/cm resistivity, <0.1 μmho/cm conductivity).

7. Sample Preparation Procedure

7.1. To determine total recoverable elements in water or waste water, take a 50-mL aliquot from an acid-preserved sample containing not more than 0.25% (wt/vol) total solids. Place the aliquot in a sterile disposable 50-mL polypropylene centrifuge tube.

7.1.1. Add 500 μL of LTRD HNO_3 and 250 μL of Ultrex or LTRD HCl to each sample.

7.1.2. Heat on a hot plate without boiling (approximately 85°C) until the final volume is reduced to 5-10 mL.

7.1.3. Loosely cover the tube with the cap and reflux for 30 min.

7.1.4. Allow the sample to cool and then dilute to 50 mL with ASTM Type I water.

7.1.5. Run one digested blank and one digested spike with each digested batch.

7.1.6. Run a duplicate and a spike for 10-20% of the samples.

7.1.7. For TCLP samples, run a spike for every sample and run 20% duplicates.

8. Instrument Procedure

8.1. Power instrument and check gases.

8.1.1. Turn the **POWER** switch on the Perkin-Elmer (PE) 5000 atomic absorption (AA) spectrometer to **ON**.

8.1.2. Turn the **POWER** switch on the PE 5000 automatic burner control to **ON**.

8.1.3. Turn the **AIR SUPPLY** valve **ON**.

8.1.4. Check the pressure in the acetylene tank; if it is <100 psi, change the tank. Turn the **ACETYLENE SUPPLY** valve **ON**.

8.1.5. Turn the **NITROUS OXIDE SUPPLY** valve **ON**, if necessary.

8.1.6. Turn the AA switch from **STANDBY** mode to **RUN**.

8.1.7. Make sure the exhaust hood is functioning.

8.1.8. Make sure the fluids in the drain vessel and drain loop are at their proper levels.

8.2. Instrument setup.

8.2.1. Insert the nickel lamp in the turret and plug it in.

8.2.2. Enter the **turret lamp number** on the keyboard.

8.2.3. Enter the recommended **lamp milliamps** (mA).

8.2.4. Enter the **lamp slit width** using the **HIGH SLIT** key for flame AA.

8.2.5. Enter the **lamp wavelength** using the **LAMBDA PEAK** key.

8.2.6. For **signal keys**, enter the **CONTINUOUS** key for setup.

8.2.7. Press the **RECORD ABSORBANCE** key.

8.2.8. Set the **MODE** key to **ABSORBANCE.**

8.2.9. If the wavelength is >300 nm, use the **AA-MODE** key.

8.2.10. If the wavelength is <300 nm, use the **AA-BG MODE** key.

8.2.11. Press the **SETUP** key and adjust the lamp for maximum absorbance.

8.2.11.1. If the absorbance is >80, press the **GAIN** key and continue the lamp adjustment.

8.2.11.2. When the maximum absorbance is reached, turn the **SETUP** key to **OFF.**

8.2.12. Set the **TIME** key to 0.5 s.

8.2.13. Press the **AZ** (autozero) key. Absorbance should read zero.

8.2.14. Install the 10-cm burner head for air-acetylene analysis and the 5-cm head for nitrous oxide-acetylene.

8.2.15. Adjust the burner head height.

8.2.16. Set oxidant and acetylene flow from Table 8.2 in PE *Analytical Methods for AAS*. (source material 12.1).

8.2.17. Shut the burner shield door and light the flame using the flame **ON/OFF** key on the burner assembly.

8.2.18. Aspirate double-deionized water while the flame is lit.

8.2.19. Aspirate the standard and adjust the instrument for maximum absorbance.

8.3. Running samples.

8.3.1. Enter S1, S2, and S3 as directed for standards in *Analytical Methods for AAS*.

8.3.2. Reset **TIME** key to 3 to 6 s.

8.3.3. Press the signal **HOLD** key.

8.3.4. Select **AVERAGE** key if desired.

8.3.5. Aspirate the known standard and press the **READ** key.

8.3.6. Calculate the characteristic concentration (cc). The result should be within ±20% of the value in *Analytical Methods for AAS*.

8.3.7. Aspirate the calibration-curve standards and read the absorbance.

8.3.8. Switch the **MODE** key to **CONC** (concentration).

8.3.9. Aspirate the standards to set concentration keys as needed.

8.3.10. Read samples and QCs (blind and known).

8.3.11. Recalibrate the instrument with standards every 8 to 12 readings.

8.3.12. When finished, switch the flame **ON/OFF** key to **OFF**. Press the **CHECK FLOW** key on the auto burner control twice to relieve line pressure.

8.3.13. Turn the **POWER** switch on the automatic burner control to **OFF**.

8.3.14. Switch the PE 5000 to **STANDBY** mode.

9. Emergency Shutdown Procedure

9.1. In case of power failure, turn the **POWER** switch on the PE 5000 to **OFF**.

9.2. Turn the gas valves **OFF**.

9.3. Follow procedures for building power failure.

10. Calculations

10.1. Characteristic concentration (cc).

$$cc = \frac{C \times 0.0044}{A_s},$$

where cc = characteristic concentration of flame AA,
C = concentration of standard,
0.0044 = 1% absorbance, and
A_s = absorbance of standard.

11. Proper Waste Disposal Practices

11.1. Solid Waste

11.1.1. Solid waste contaminated with hazardous chemicals above the level of concern is not generated during the routine preparation of QC samples for analysis for inorganic contaminants.

11.1.2. If a solid waste is generated that may be contaminated at a level of concern, the appropriate paperwork is completed on a case-by-case basis.

11.1.2.1. A Waste Profile Request Form (WPRF) describing the solid waste is completed and sent to the Waste Management Group for review.

11.1.2.2. If the Waste Management Group determines that the solid waste is contaminated below the level of concern, the waste is disposed of as ordinary laboratory trash.

11.1.2.3. If the Waste Management Group determines that the solid waste is contaminated above the level of concern, pickup of the contaminated waste is requested as described in Sec. 9.3.

11.2. Liquid Waste

11.2.1. Liquid waste containing hazardous contaminants, such as solutions of trace metals, is accumulated in a coated glass jar in a secondary containment tray and is kept segregated from liquid waste contaminated with organic or radioactive substances or cyanide.

11.2.2. The bottle is labeled with a hazardous waste label and a label indicating its use for trace metal waste.

11.2.3. The bottle is opened only for the period of time necessary to add waste to it.

11.2.4. When the bottle is full, it is capped and kept in the secondary containment tray pending pickup by the Waste Management Group.

11.2.5. A new bottle is labeled for further use.

11.3. Waste Pickup

11.3.1. Pickup by the Waste Management Group of solid waste or a full bottle of liquid waste containing trace metals is requested using the current Chemical Waste Disposal Request Form (CWDR). The current Waste

Profile Request Form (WPRF) that describes the waste is referenced on the CWDR.

11.3.2. The Waste Management Group picks up the waste for disposal in accord with Laboratory policy.

12. Source Materials

12.1. Perkin-Elmer Corp., *Analytical Methods for Atomic Absorption Spectroscopy* (Norwalk, CT, 1976).

12.2. Perkin-Elmer Corp., *Instructions: Zeeman/5000 System* (Norwalk, CT, 1982).

12.3. U.S. Environmental Protection Agency, "Methods for Chemical Analysis of Water and Wastes," EPA-600/4-79-020 (rev. March 1983).

12.4. U.S. Environmental Protection Agency, "Test Methods for Evaluation of Solid Waste: Laboratory Manual of Physical and Chemical Methods," SW-846 (Nov. 1986).

12.5. "Chemical, Hazardous, and Mixed Waste," Administrative Requirement 10-3, Chapter 1 in Los Alamos National Laboratory *Environment, Safety, and Health Manual* (most recent edition).

POTASSIUM IN WATER AND SOIL EXTRACTS — FLAME AA

Analyte: Potassium	**Method No.:** EI175
Matrix: Water, waste water, and soil extracts	**Detection Limit:** 2 mg/L
Procedure: Flame atomic absorption	**Accuracy and Precision:** not determined
Effective Date: 09/23/91	**Authors:** Michael G. Bell Barbara J. Hemberger

SAFETY NOTE: Before beginning this procedure, read all of the Material Safety Data Sheets for the chemicals listed in Sec. 6. Read Sec. 4.3 of the EM-9 Safety Manual for information on personal protective clothing and equipment. Read Sec. 11 of this procedure and Source Material 12.5 for proper waste disposal practices.

1. Principle of Method

1.1. This procedure is based on Environmental Protection Agency (EPA) method 258.1 and SW-846 method 7610.

1.2. Potassium in solution may be readily determined by atomic absorption spectroscopy (AAS). The method is simple and rapid and is applicable to K in drinking, surface, and saline waters and in domestic and industrial wastes.

1.3. Drinking water free of particulate matter may be analyzed directly. Ground water, other aqueous samples, TCLP extracts, industrial wastes, soils, sludges, sediments, and other solid wastes require digestion before analysis.

2. Accuracy and Precision

2.1. The accuracy and precision of the method for in-house quality control samples has not yet been determined.

3. Collection and Storage of Samples

3.1. Preserve samples with nitric acid (HNO_3) at a pH <2.0. Complete analysis within six months.

4. Interferences

4.1. Contamination is of prime concern during sample preparation. The work area, including the bench top, should be periodically cleaned to eliminate environmental contamination.

4.2. Chemical interferences are matrix dependent and can be corrected by the addition of matrix modifiers. Refer to Perkin-Elmer (PE) Analytical Methods for AAS for appropriate modifier.

4.3. Silica from the glassware will grow into the sample solution during and following sample processing. Use sterile disposable 50-mL polypropylene centrifuge tubes in the sample digestion steps to control this problem.

5. Apparatus

5.1. Centrifuge tubes: 50-mL, sterile polypropylene.

5.2. Rainin pipettes with disposable tips.

5.3. Wash bottles: 125-mL, polypropylene, screw tops.

5.4. Hot plate: with aluminum heating block drilled to hold centrifuge tubes.

5.5. Perkin-Elmer 5000 atomic absorption spectrometer or equivalent.

5.6. Gases for the above instrument: air, acetylene, nitrous oxide, argon.

6. Reagents

6.1. Nitric acid (low-temperature redistilled acid, LTRD).

6.2. Hydrochloric acid (low-temperature redistilled acid, LTRD).

6.3. Double-deionized water.

6.4. ASTM Type I water (>10 MΩ/cm resistivity, <0.1 μmho/cm conductivity).

7. Sample Preparation Procedure

7.1. To determine total recoverable elements in water or waste water, take a 50-mL aliquot from an acid-preserved sample containing not more than 0.25% (wt/vol) total solids. Place the aliquot in a sterile disposable 50-mL polypropylene centrifuge tube.

7.1.1. Add 500 μL of LTRD HNO_3 and 250 μL of Ultrex or LTRD HCl to each sample.

7.1.2. Heat on a hot plate without boiling (approximately 85°C) until the final volume is reduced to 5-10 mL.

7.1.3. Loosely cover the tube with the cap and reflux for 30 min.

7.1.4. Allow the sample to cool and dilute to 50 mL with ASTM Type I water.

7.1.5. Run one digested blank and one digested spike with each digested batch.

7.1.6. Run a duplicate and a spike for 10-20% of the samples.

7.1.7. For TCLP samples, run a spike for every sample and run 20% duplicates.

8. Instrument Procedure

8.1. Power instrument and check gases.

8.1.1. Turn the **POWER** switch on the Perkin-Elmer (PE) 5000 atomic absorption (AA) spectrometer to **ON**.

8.1.2. Turn the **POWER** switch on the PE 5000 automatic burner control to **ON**.

8.1.3. Turn the **AIR SUPPLY** valve **ON**.

8.1.4. Check the pressure in the acetylene tank; if it is <100 psi, change the tank. Turn the **ACETYLENE SUPPLY** valve **ON**.

8.1.5. Turn the **NITROUS OXIDE SUPPLY** valve **ON**, if necessary.

8.1.6. Turn the AA switch from **STANDBY** mode to **RUN**.

8.1.7. Make sure the exhaust hood is functioning.

8.1.8. Make sure the fluids in the drain vessel and drain loop are at their proper levels.

8.2. Instrument setup.

8.2.1. Insert the potassium lamp in the turret and plug it in.

8.2.2. Enter the **turret lamp number** on the keyboard.

8.2.3. Enter the recommended **lamp milliamps** (mA).

8.2.4. Enter the **lamp slit width** using the **HIGH SLIT** key for flame AA.

8.2.5. Enter the **lamp wavelength** using the **LAMBDA PEAK** key.

8.2.6. For **signal keys**, enter the **CONTINUOUS** key for setup.

8.2.7. Press the **RECORD ABSORBANCE** key.

8.2.8. Set the **MODE** key to **ABSORBANCE.**

8.2.9. If the wavelength is >300 nm, use the **AA-MODE** key.

8.2.10. If the wavelength is <300 nm, use the **AA-BG MODE** key.

8.2.11. Press the **SETUP** key and adjust the lamp for maximum absorbance.

8.2.11.1. If the absorbance is >80, press the **GAIN** key and continue the lamp adjustment.

8.2.11.2. When the maximum absorbance is reached, turn the **SETUP** key to **OFF.**

8.2.12. Set the **TIME** key to 0.5 s.

8.2.13. Press the **AZ** (autozero) key. Absorbance should read zero.

8.2.14. Install the 10-cm burner head for air-acetylene analysis and the 5-cm head for nitrous oxide-acetylene.

8.2.15. Adjust the burner head height.

8.2.16. Set oxidant and acetylene flow from Table 8.2 in PE *Analytical Methods for AAS.* (source material 12.1).

8.2.17. Shut the burner shield door and light the flame using the flame **ON/OFF** key on the burner assembly.

8.2.18. Aspirate double-deionized water while the flame is lit.

8.2.19. Aspirate the standard and adjust the instrument for maximum absorbance.

8.3. Running samples.

8.3.1. Enter S1, S2, and S3 as directed for standards in *Analytical Methods for AAS.*

8.3.2. Reset **TIME** key to 3 to 6 s.

8.3.3. Press the signal **HOLD** key.

8.3.4. Select **AVERAGE** key if desired.

8.3.5. Aspirate the known standard and press the **READ** key.

8.3.6. Calculate the characteristic concentration (cc). The result should be within ±20% of the value in *Analytical Methods for AAS*.

8.3.7. Aspirate the calibration-curve standards and read the absorbance.

8.3.8. Switch the **MODE** key to **CONC** (concentration).

8.3.9. Aspirate the standards to set concentration keys as needed.

8.3.10. Read samples and QCs (blind and known).

8.3.11. Recalibrate the instrument with standards every 8 to 12 readings.

8.3.12. When finished, switch the flame **ON/OFF** key to **OFF**. Press the **CHECK FLOW** key on the auto burner control twice to relieve line pressure.

8.3.13. Turn the **POWER** switch on the automatic burner control to **OFF**.

8.3.14. Switch the PE 5000 to **STANDBY** mode.

9. Emergency Shutdown Procedure

9.1. In case of power failure, turn the **POWER** switch on the PE 5000 to **OFF**.

9.2. Turn the gas valves **OFF**.

9.3. Follow procedures for building power failure.

10. Calculations

10.1. Characteristic concentration (cc).

$$cc = \frac{C \times 0.0044}{A_s},$$

where cc = characteristic concentration for flame AA,
C = concentration of standard,
0.0044 = 1% absorbance, and
A_s = absorbance of standard.

11. Proper Waste Disposal Practices

11.1. Solid Waste

11.1.1. Solid waste contaminated with hazardous chemicals above the level of concern is not generated during the routine preparation of QC samples for analysis for inorganic contaminants.

11.1.2. If a solid waste is generated that may be contaminated at a level of concern, the appropriate paperwork is completed on a case-by-case basis.

11.1.2.1. A Waste Profile Request Form (WPRF) describing the solid waste is completed and sent to the Waste Management Group for review.

11.1.2.2. If the Waste Management Group determines that the solid waste is contaminated below the level of concern, the waste is disposed of as ordinary laboratory trash.

11.1.2.3. If the Waste Management Group determines that the solid waste is contaminated above the level of concern, pickup of the contaminated waste is requested as described in Sec. 9.3.

11.2. Liquid Waste

11.2.1. Liquid waste containing hazardous contaminants, such as solutions of trace metals, is accumulated in a coated glass jar in a secondary containment tray and is kept segregated from liquid waste contaminated with organic or radioactive substances or cyanide.

11.2.2. The bottle is labeled with a hazardous waste label and a label indicating its use for trace-metal waste.

11.2.3. The bottle is opened only for the period of time necessary to add waste to it.

11.2.4. When the bottle is full, it is capped and kept in the secondary containment tray pending pickup by the Waste Management Group.

11.2.5. A new bottle is labeled for further use.

11.3. Waste Pickup

11.3.1. Pickup by the Waste Management Group of solid waste or a full bottle of liquid waste containing trace metals is requested using the current Chemical Waste Disposal Request Form (CWDR). The current Waste

Profile Request Form (WPRF) that describes the waste is referenced on the CWDR.

11.3.2. The Waste Management Group picks up the waste for disposal in accord with Laboratory policy.

12. Source Materials

12.1. Perkin-Elmer Corp., *Analytical Methods for Atomic Absorption Spectroscopy* (Norwalk, CT, 1976).

12.2. Perkin-Elmer Corp., *Instructions: Zeeman/5000 System* (Norwalk, CT, 1982).

12.3. U.S. Environmental Protection Agency, "Methods for Chemical Analysis of Water and Wastes," EPA-600/4-79-020 (rev. March 1983).

12.4. U.S. Environmental Protection Agency, "Test Methods for Evaluation of Solid Waste: Laboratory Manual of Physical and Chemical Methods," SW-846 (Nov. 1986).

12.5. "Chemical, Hazardous, and Mixed Waste," Administrative Requirement 10-3, Chapter 1 in Los Alamos National Laboratory *Environment, Safety, and Health Manual* (most recent edition).

SELENIUM IN WATER AND SOIL EXTRACTS — GRAPHITE FURNACE AA

Analtye: Selenium	**Method No.:** EI185
Matrix: Water, waste water, and soil extracts	**Detection Limit:** 2.0 μg/L
Procedure: Graphite furnace atomic absorption	**Accuracy and Precision:** 96% ± 1.04% RSD
Effective Date: 09/25/91	**Authors:** Michael G. Bell Barbara J. Hemberger

SAFETY NOTE: Before beginning this procedure, read all of the Material Safety Data Sheets for the chemicals listed in Sec. 6. Read Sec. 4.3 of the EM-9 Safety Manual for information on personal protective clothing and equipment.

1. Principle of Method

1.1. This procedure is based on Environmental Protection Agency (EPA) method 270.2 and SW846 method 7740.

1.1. Selenium in solution may be readily determined by graphite furnace atomic absorption spectroscopy. The method is applicable to Se in drinking, surface, and saline waters and in domestic and industrial wastes.

1.3. Drinking water free of particulate matter may be analyzed directly. Ground water, other aqueous samples, TCLP extracts, industrial wastes, soils, sludges, sediments, and other solid wastes require digestion before analysis.

2. Accuracy and Precision

2.1. The determination of selenium in 18 in-house quality control samples (9.7 μg/L) over an 8-month period had a mean of 10.1 μg/L and a relative standard deviation (RSD) of 1.04%.

3. Collection and Storage of Samples.

3.1. Preserve samples with nitric acid (HNO_3) at a pH <2.0. Complete analysis within 6 months.

4. Interferences

4.1. Contamination is of prime concern during sample preparation. Periodically clean the work area, including the bench top, to eliminate environmental contamination. Use acid-washed sample cups in the autosampler.

4.2. Chemical interferences can be controlled by the addition of a matrix modifier to all samples and standards. Refer to Perkin-Elmer chart 0993-8199 Rev. D (11/89), or to the PE Methods of Analysis for AAS for the appropriate matrix modifier.

4.3. Silica from the glassware will grow into the sample solution during and following sample processing. To control this problem, use disposable sterile 50-mL polypropylene centrifuge tubes in the sample digestion steps.

5. Apparatus

5.1. Centrifuge tubes: 50-mL, sterile polypropylene.

5.2. Rainin pipettes with disposable tips.

5.3. Wash bottles: 125-mL, polypropylene, screw tops.

5.4. Hot plate: with aluminum heating block drilled to hold centrifuge tubes.

5.5. Perkin-Elmer 5000 atomic absorption instrument: equipped with a Zeeman graphite furnace or equivalent.

5.6. Required gas for the above instrument is ultrapure argon.

6. Reagents

6.1. Nitric acid (low-temperature redistilled acid, LTRD).

6.2. Hydrochloric acid (low-temperature redistilled acid, LTRD).

6.3. Double-deionized water.

6.4. ASTM Type I water (>10 MΩ/cm resistivity, >0.1 μmho/cm conductivity).

6.5. Appropriate matrix modifier for all samples, standards, and QC's.

6.6. Secondary standards for making the appropriate standard curves.

7. Sample Preparation Procedure

7.1. To determine total recoverable elements in water, waste water, and soil extracts, take a 50-mL aliquot from an acid preserved sample containing not more than 0.25% (wt/vol) total solids. Place the aliquot in a sterile 50-mL disposable polypropylene centrifuge tube.

7.1.1. Add 500 μL of LTRD HNO_3 and 250 μL of Ultrex or LTRD HCl to each sample.

7.1.2. Heat on a hot plate without boiling (approximately 85°C) until the volume is reduced to 5-10 mL.

7.1.3. Loosely cover the tube with the cap and reflux for 30 min.

7.1.4. Allow the sample to cool, and dilute to 50 mL with ASTM Type I water.

7.1.5. Run one digested blank and one digested spike for each digested batch.

7.1.6. Run a duplicate and a spike for 10-20% of the samples.

7.1.7. For TCLP samples, run a spike for every sample and 20% duplicates.

7.1.8. The analysis should be performed before the EPA regulatory holding times expire.

7.1.9. Add sample and standards to acid-cleaned sample cups.

8. Instrument Procedure

8.1. Instrument power and gases check.

8.1.1. Turn the **POWER SWITCH** to the PE5000 Atomic Absorption (AA) to **ON**.

8.1.2. Turn **ON** the argon supply valve after checking the pressure at the tank. Pressure must be over 100 psi or the tank must be changed.

8.1.3. Turn the AA switch from **STANDBY** mode to **RUN**.

8.1.4. Make sure the exhaust hood over the graphite furnace is functioning.

8.2. Instrument setup.

8.2.1. Insert the selenium lamp into the turret oriented toward the ETVAA and plug it in.

8.2.2. Enter **turret lamp number** into keyboard.

8.2.3. Enter recommended **lamp milliamps** (mA) or **watts** depending on lamp type (EDL/HCL).

8.2.3.1. Warm up the EDL and/or HCL lamp for a minimum of 20 min.

8.2.4. Enter **lamp slit width** using **LOW SLIT** key for ETVAA.

8.2.5. Enter **lamp wavelength** using **LAMBDA PEAK** key.

8.2.6. Turn AA switch inside lamp housing to **ICP/ZAA** position.

8.3. Keyboard setup.

8.3.1. Set **SIGNAL** key to **PK AREA** (peak area).

8.3.2. Turn **REC ABS** (record absorbance) signal key **ON**.

8.3.3. Enter **AVG** (average) number (if used).

8.3.4. Enter **CONC MODE** (concentration).

8.4. Furnace setup.

8.4.1. Press **ZAA** key.

8.4.2. Turn **ACCESSORY** knob to **ON** position.

8.4.3. Turn chiller **ON** and check that the water level is above the coils.

8.4.4. Check that the water bottle for distilled water rinse on the autosampler is full.

8.4.5. Turn **ON** the HGA-500 programmer.

8.4.5.1. Enter the temperature program for the element from the ETVAA procedure manual and store the procedure number.

8.5. Computer setup.

8.5.1. Turn PE AA Data System 10 computer **master switch** to **ON**.

8.5.2. Set up ID/WT file.

8.5.3. Turn **print button** on PE5000 keyboard **ON** and store the program.

8.6. Set up autosampler.

8.6.1. Recalibrate the standard curve every 8 to 12 samples.

8.6.2. Enter the number of standards (# stds).

8.6.3. Enter the last sample number (last samp).

8.6.4. Enter the sample volume (samp vol).

8.6.5. Enter the alternate volume (alt vol) for the matrix modifier if used.

8.6.6. Enter the instrument program number (inst prog).

8.6.7. Enter the HGA program number (HGA prog).

8.7. Graphite furnace setup.

8.7.1. Open the furnace and clean or replace the graphite tube. Use the tube with or without the platform depending on the element.

8.7.2. If inserting a new tube, condition it with the manual temperature key.

8.7.3. Using the alignment tool, reinsert the graphite tube and close the furnace.

8.7.4. Using the manual temperature key, set the pyrometer to the atomization temperature of the element and balance the lights (red/green) using the calibration (CAL) knob.

8.7.5. Place the AS40 in **STANDBY** mode and align the autosampler arm. Check the depth of the sample delivery inside the tube and inside the samples. Exit **STANDBY** mode.

8.7.6. Remove and check the furnace lenses. Reinsert the lenses and check the absorbance. If the absorbance reads above 0.100, clean the lenses.

8.7.7. Put samples and standards into the autosampler tray and cover with the dust cover to prevent contamination.

8.7.8. Put the matrix modifier in the holder position, if required.

8.7.9. Check the blank and standards manually.

8.7.10. Calculate the characteristic concentration (cc). If it is within ±20% of chart value (0993-8199 Rev. D 11/89) start the run.

8.7.11. Enter **collect data** mode on PE Data System 10 computer and follow instructions.

8.7.12. After run is complete, press to **DISK** key on PE Data System 10 **twice**.

8.7.13. Select **report** mode on the computer, follow instructions, and print the out final report.

8.7.14. When finished, shut off the chiller, argon gas supply, lamps, EDL power supply, and computer.

8.7.15 Place the autosampler, HGA Programmer,and PE5000 in standby mode.

9. Emergency Shutdown Procedure

9.1. In case of power failure, turn **POWER SWITCH** on PE5000 AA to **OFF**.

9.2. Turn **off** the **gas valves**.

9.3. Follow building power failure procedures.

10. Calculations

10.1. Characteristic concentration (cc).

$$cc = \frac{C \times V \times 0.0044}{A_s},$$

where cc = characteristic concentration for ETVAA,
C = concentration of standard (μg/L),
V = sample aliquot (μL),
A_s = absorbance of standard, and
0.0044 = 1% absorbance.

11. Source Material

11.1. *Analytical Methods for Atomic Absorption Spectrophotometry*, (Perkin-Elmer, Norwalk, Conn., 1976).

11.2. *Instructions: Zeeman/5000 System*, (Perkin-Elmer, Norwalk, Conn., 1982).

11.3. Methods for Chemical Analysis of Water and Wastes, EPA-600/4-79-020 U.S. Environmental Protection Agency, (rev. March 1983).

11.4. Perkin-Elmer chart 0993-8199 Rev. D (11/89).

11.5. "Test Methods for Evaluation of Solid Waste: Laboratory Manual of Physical and Chemical Methods," EPA report no. SW-846 (November 1986).

SILVER IN WATER AND SOIL EXTRACTS — FLAME AA

Analyte: Silver	**Method No.:** EI190
Matrix: Water, waste water, and soil extracts	**Detection Limit:** 10 μg/L
Procedure: Flame atomic absorption	**Accuracy and Precision:** 100% ± 1.2% RSD
Effective Date: 09/23/91	**Authors:** Michael G. Bell Barbara J. Hemberger

SAFETY NOTE: Before beginning this procedure, read all of the Material Safety Data Sheets for the chemicals listed in Sec. 6. Read Sec. 4.3 of the EM-9 Safety Manual for information on personal protective clothing and equipment. Read Sec. 11 of this procedure and Source Material 12.5 for proper waste disposal practices.

1. Principle of Method

1.1. This procedure is based on Environmental Protection Agency (EPA) method 272.1 and SW-846 method 7760.

1.2. Silver in solution may be readily determined by atomic absorption spectroscopy (AAS). The method is simple and rapid and is applicable to Ag in drinking, surface, and saline waters and in domestic and industrial wastes.

1.3. Drinking water free of particulate matter may be analyzed directly. Ground water, other aqueous samples, TCLP extracts, industrial wastes, soils, sludges, sediments, and other solid wastes require digestion before analysis.

2. Accuracy and Precision

2.1. The determination of silver in 88 in-house quality control samples (500 μg/L) over a 9-month period had a mean of 0.494 μg/L and a relative standard deviation (RSD) of 1.2%.

3. Collection and Storage of Samples

3.1. Preserve samples with nitric acid (HNO_3) at a pH <2.0. Complete analysis within six months.

4. Interferences

4.1. Contamination is of prime concern during sample preparation. The work area, including the bench top, should be periodically cleaned to eliminate environmental contamination.

4.2. Chemical interferences are matrix dependent.

4.3. Silica from the glassware will grow into the sample solution during and following sample processing. Use sterile disposable 50-mL polypropylene centrifuge tubes in the sample digestion steps to control this problem.

5. Apparatus

5.1. Centrifuge tubes: 50-mL, sterile polypropylene.

5.2. Rainin pipettes with disposable tips.

5.3. Wash bottles: 125-mL, polypropylene, screw tops.

5.4. Hot plate: with aluminum heating block drilled to hold centrifuge tubes.

5.5. Perkin-Elmer 5000 atomic absorption spectrometer or equivalent.

5.6. Gases for the above instrument: air, acetylene, nitrous oxide, argon.

6. Reagents

6.1. Nitric acid (low-temperature redistilled acid, LTRD).

6.2. Hydrochloric acid (low-temperature redistilled acid, LTRD).

6.3. Double-deionized water.

6.4. ASTM Type I water (>10 MΩ/cm resistivity, <0.1 μmho/cm conductivity).

7. Sample Preparation Procedure

7.1. To determine total recoverable elements in water or waste water, take a 50-mL aliquot from an acid-preserved sample containing not more than 0.25% (wt/vol) total solids. Place the aliquot in a sterile disposable 50-mL polypropylene centrifuge tube.

7.1.1. Add 500 μL of LTRD HNO_3 and 250 μL of Ultrex or LTRD HCl to each sample.

7.1.2. Heat on a hot plate without boiling (approximately 85°C) until the final volume is reduced to 5-10 mL.

7.1.3. Loosely cover the tube with the cap and reflux for 30 min.

7.1.4. Allow the sample to cool and dilute to 50 mL with ASTM Type I water.

7.1.5. Run one digested blank and one digested spike with each digested batch.

7.1.6. Run a duplicate and a spike for 10-20% of the samples.

7.1.7. For TCLP samples, run a spike for every sample and run 20% duplicates.

7.1.8. The analysis should be performed before the regulatory (EPA SW846) holding times expire.

8. Instrument Procedure

8.1. Power instrument and check gases.

8.1.1. Turn the **POWER** switch on the Perkin-Elmer (PE) 5000 atomic absorption (AA) spectrometer to **ON**.

8.1.2. Turn the **POWER** switch on the PE 5000 automatic burner control to **ON**.

8.1.3. Turn the **AIR SUPPLY** valve **ON**.

8.1.4. Check the pressure in the acetylene tank; if it is <100 psi, change the tank. Turn the **ACETYLENE SUPPLY** valve **ON**.

8.1.5. Turn the **NITROUS OXIDE SUPPLY** valve **ON**, if necessary.

8.1.6. Turn the AA switch from **STANDBY** mode to **RUN**.

8.1.7. Make sure the exhaust hood is functioning.

8.1.8. Make sure the fluids in the drain vessel and drain loop are at their proper levels.

8.2. Instrument setup.

8.2.1. Insert the silver lamp in the turret and plug it in.

8.2.2. Enter the **turret lamp number** on the keyboard.

8.2.3. Enter the recommended **lamp milliamps** (mA).

8.2.4. Enter the **lamp slit width** using the **HIGH SLIT** key for flame AA.

8.2.5. Enter the **lamp wavelength** using the **LAMBDA PEAK** key.

8.2.6. For **signal keys**, enter the **CONTINUOUS** key for setup.

8.2.7. Press the **RECORD ABSORBANCE** key.

8.2.8. Set the **MODE** key to **ABSORBANCE.**

8.2.9. If the wavelength is >300 nm, use the **AA-MODE** key.

8.2.10. If the wavelength is <300 nm, use the **AA-BG MODE** key.

8.2.11. Press the **SETUP** key and adjust the lamp for maximum absorbance.

8.2.11.1. If the absorbance is >80, press the **GAIN** key and continue the lamp adjustment.

8.2.11.2. When the maximum absorbance is reached, turn the **SETUP** key to **OFF.**

8.2.12. Set the **TIME** key to 0.5 s.

8.2.13. Press the **AZ** (autozero) key. Absorbance should read zero.

8.2.14. Install the 10-cm burner head for air-acetylene analysis and the 5-cm head for nitrous oxide-acetylene.

8.2.15. Adjust the burner head height.

8.2.16. Set oxidant and acetylene flow from Table 8.2 in PE *Analytical Methods for AAS*. (source material 12.1).

8.2.17. Shut the burner shield door and light the flame using the flame **ON/OFF** key on the burner assembly.

8.2.18. Aspirate double-deionized water while the flame is lit.

8.2.19. Aspirate the standard and adjust the instrument for maximum absorbance.

8.3. Running samples.

8.3.1. Enter S1, S2, and S3 as directed for standards in *Analytical Methods for AAS*.

8.3.2. Reset **TIME** key to 3 to 6 s.

8.3.3. Press the signal **HOLD** key.

8.3.4. Select **AVERAGE** key if desired.

8.3.5. Aspirate the known standard and press the **READ** key.

8.3.6. Calculate the characteristic concentration (cc). The result should be within ±20% of the value in *Analytical Methods for AAS*.

8.3.7. Aspirate the calibration-curve standards and read the absorbance.

8.3.8. Switch the **MODE** key to **CONC** (concentration).

8.3.9. Aspirate the standards to set concentration keys as needed.

8.3.10. Read samples and QCs (blind and known).

8.3.11. Recalibrate the instrument with standards every 8 to 12 readings.

8.3.12. When finished, switch the flame **ON/OFF** key to **OFF**. Press the **CHECK FLOW** key on the auto burner control twice to relieve line pressure.

8.3.13. Turn the **POWER** switch on the automatic burner control to **OFF**.

8.3.14. Switch the PE 5000 to **STANDBY** mode.

9. Emergency Shutdown Procedure

9.1. In case of power failure, turn the **POWER** switch on the PE 5000 to **OFF**.

9.2. Turn the gas valves **OFF**.

9.3. Follow procedures for building power failure.

10. Calculations

10.1. Characteristic concentration (cc).

$$cc = \frac{C \times 0.0044}{A_s},$$

where cc = characteristic concentration of flame AA,
C = concentration of standard,
0.0044 = 1% absorbance, and
A_s = absorbance of standard.

11. Proper Waste and Disposal Practices

11.1. Solid Waste

11.1.1. Solid waste contaminated with hazardous chemicals above the level of concern is not generated during the routine preparation of QC samples for analysis for inorganic contaminants.

11.1.2. If a solid waste is generated that may be contaminated at a level of concern, the appropriate paperwork is completed on a case-by-case basis.

11.1.2.1. A Waste Profile Request Form (WPRF) describing the solid waste is completed and sent to the Waste Management Group for review.

11.1.2.2. If the Waste Management Group determines that the solid waste is contaminated below the level of concern, the waste is disposed of as ordinary laboratory trash.

11.1.2.3. If the Waste Management Group determines that the solid waste is contaminated above the level of concern, pickup of the contaminated waste is requested as described in Sec. 9.3.

11.2. Liquid Waste

11.2.1. Liquid waste containing hazardous contaminants, such as solutions of trace metals, is accumulated in a coated glass jar in a secondary containment tray and is kept segregated from liquid waste contaminated with organic or radioactive substances or cyanide.

11.2.2. The bottle is labeled with a hazardous waste label and a label indicating its use for trace-metal waste.

11.2.3. The bottle is opened only for the period of time necessary to add waste to it.

11.2.4. When the bottle is full, it is capped and kept in the secondary containment tray pending pickup by the Waste Management Group.

11.2.5. A new bottle is labeled for further use.

11.3. Waste Pickup

11.3.1. Pickup by the Waste Management Group of solid waste or a full bottle of liquid waste containing trace metals is requested using the current Chemical Waste Disposal Request Form (CWDR). The current Waste

Profile Request Form (WPRF) that describes the waste is referenced on the CWDR.

11.3.2. The Waste Management Group picks up the waste for disposal in accord with Laboratory policy.

12. Source Materials

12.1. Perkin-Elmer Corp., *Analytical Methods for Atomic Absorption Spectroscopy* (Norwalk, CT, 1976).

12.2. Perkin-Elmer Corp., *Instructions: Zeeman/5000 System* (Norwalk, CT, 1982).

12.3. U.S. Environmental Protection Agency, "Methods for Chemical Analysis of Water and Wastes," EPA-600/4-79-020 (rev. March 1983).

12.4. U.S. Environmental Protection Agency, "Test Methods for Evaluation of Solid Waste: Laboratory Manual of Physical and Chemical Methods," SW-846 (Nov. 1986).

12.5. "Chemical, Hazardous, and Mixed Waste," Administrative Requirement 10-3, Chapter 1 in Los Alamos National Laboratory *Environment, Safety, and Health Manual* (most recent edition).

SODIUM IN WATER AND SOIL EXTRACTS — FLAME AA

Analyte: Sodium	**Method No.:** EI195
Matrix: Water, waste water, and soil extracts	**Detection Limit:** 2 mg/L
Procedure: Flame atomic absorption	**Accuracy and Precision:** not determined
Effective Date: 09/23/91	**Authors:** Michael G. Bell Barbara J. Hemberger

SAFETY NOTE: Before beginning this procedure, read all of the Material Safety Data Sheets for the chemicals listed in Sec. 6. Read Sec. 4.3 of the EM-9 Safety Manual for information on personal protective clothing and equipment. Read Sec. 11 of this procedure and Source Material 12.5 for proper waste disposal practices.

1. Principle of Method

1.1. This procedure is based on Environmental Protection Agency (EPA) method 273.1 and SW-846 method 7770.

1.2. Sodium in solution may be readily determined by atomic absorption spectroscopy (AAS). The method is simple and rapid and is applicable to Na in drinking, surface, and saline waters and in domestic and industrial wastes.

1.3. Drinking water free of particulate matter may be analyzed directly. Ground water, other aqueous samples, TCLP extracts, industrial wastes, soils, sludges, sediments, and other solid wastes require digestion before analysis.

2. Accuracy and Precision

2.1. The accuracy and precision of the method for in-house quality control samples has not yet been determined.

3. Collection and Storage of Samples

3.1. Preserve samples with nitric acid (HNO_3) at a pH <2.0. Complete analysis within six months.

4. Interferences

4.1. Contamination is of prime concern during sample preparation. The work area, including the bench top, should be periodically cleaned to eliminate environmental contamination.

4.2. Chemical interferences are matrix dependent and can be corrected by the addition of matrix modifiers. Refer to the Perkin-Elmer (PE) Analytical Methods for AAS for appropriate modifier.

4.3. Silica from the glassware will grow into the sample solution during and following sample processing. Use sterile disposable 50-mL polypropylene centrifuge tubes in the sample digestion steps to control this problem.

5. Apparatus

5.1. Centrifuge tubes: 50-mL, sterile polypropylene.

5.2. Rainin pipettes with disposable tips.

5.3. Wash bottles: 125-mL, polypropylene, screw tops.

5.4. Hot plate: with aluminum heating block drilled to hold centrifuge tubes.

5.5. Perkin-Elmer 5000 atomic absorption spectrometer or equivalent.

5.6. Gases for the above instrument: air, acetylene, nitrous oxide, argon.

6. Reagents

6.1. Nitric acid (low-temperature redistilled acid, LTRD).

6.2. Hydrochloric acid (low-temperature redistilled acid, LTRD).

6.3. Double-deionized water.

6.4. ASTM Type I water (>10 MΩ/cm resistivity, <0.1 μmho/cm conductivity).

7. Sample Preparation Procedure

7.1. To determine total recoverable elements in water or waste water, take a 50-mL aliquot from an acid-preserved sample containing not more than 0.25% (wt/vol) total solids. Place the aliquot in a sterile disposable 50-mL polypropylene centrifuge tube.

7.1.1. Add 500 μL of LTRD HNO_3 and 250 μL of Ultrex or LTRD HCl to each sample.

7.1.2. Heat on a hot plate without boiling (approximately 85°C) until the final volume is reduced to 5-10 mL.

7.1.3. Loosely cover the tube with the cap and reflux for 30 min.

7.1.4. Allow the sample to cool and dilute to 50 mL with ASTM Type I water.

7.1.5. Run one digested blank and one digested spike with each digested batch.

7.1.6. Run a duplicate and a spike for 10-20% of the samples.

7.1.7. For TCLP samples, run a spike for every sample and run 20% duplicates.

8. Instrument Procedure

8.1. Power instrument and check gases.

8.1.1. Turn the **POWER** switch on the Perkin-Elmer (PE) 5000 atomic absorption (AA) spectrometer to **ON**.

8.1.2. Turn the **POWER** switch on the PE 5000 automatic burner control to **ON**.

8.1.3. Turn the **AIR SUPPLY** valve **ON**.

8.1.4. Check the pressure in the acetylene tank; if it is <100 psi, change the tank. Turn the **ACETYLENE SUPPLY** valve **ON**.

8.1.5. Turn the **NITROUS OXIDE SUPPLY** valve **ON**, if necessary.

8.1.6. Turn the AA switch from **STANDBY** mode to **RUN**.

8.1.7. Make sure the exhaust hood is functioning.

8.1.8. Make sure the fluids in the drain vessel and drain loop are at their proper levels.

8.2. Instrument setup.

8.2.1. Insert the sodium lamp in the turret and plug it in.

8.2.2. Enter the **turret lamp number** on the keyboard.

8.2.3. Enter the recommended **lamp milliamps** (mA).

8.2.4. Enter the **lamp slit width** using the **HIGH SLIT** key for flame AA.

8.2.5. Enter the **lamp wavelength** using the **LAMBDA PEAK** key.

8.2.6. For **signal keys**, enter the **CONTINUOUS** key for setup.

8.2.7. Press the **RECORD ABSORBANCE** key.

8.2.8. Set the **MODE** key to **ABSORBANCE.**

8.2.9. If the wavelength is >300 nm, use the **AA-MODE** key.

8.2.10. If the wavelength is <300 nm, use the **AA-BG MODE** key.

8.2.11. Press the **SETUP** key and adjust the lamp for maximum absorbance.

8.2.11.1. If the absorbance is >80, press the **GAIN** key and continue the lamp adjustment.

8.2.11.2. When the maximum absorbance is reached, turn the **SETUP** key to **OFF.**

8.2.12. Set the **TIME** key to 0.5 s.

8.2.13. Press the **AZ** (autozero) key. Absorbance should read zero.

8.2.14. Install the 10-cm burner head for air-acetylene analysis and the 5-cm head for nitrous oxide-acetylene.

8.2.15. Adjust the burner head height.

8.2.16. Set oxidant and acetylene flow from Table 8.2 in PE *Analytical Methods for AAS.* (source material 12.1).

8.2.17. Shut the burner shield door and light the flame using the flame **ON/OFF** key on the burner assembly.

8.2.18. Aspirate double-deionized water while the flame is lit.

8.2.19. Aspirate the standard and adjust the instrument for maximum absorbance.

8.3. Running samples.

8.3.1. Enter S1, S2, and S3 as directed for standards in *Analytical Methods for AAS.*

8.3.2. Reset **TIME** key to 3 to 6 s.

8.3.3. Press the signal **HOLD** key.

8.3.4. Select **AVERAGE** key if desired.

8.3.5. Aspirate the known standard and press the **READ** key.

8.3.6. Calculate the characteristic concentration (cc). The result should be within ±20% of the value in *Analytical Methods for AAS*.

8.3.7. Aspirate the calibration-curve standards and read the absorbance.

8.3.8. Switch the **MODE** key to **CONC** (concentration).

8.3.9. Aspirate the standards to set concentration keys as needed.

8.3.10. Read samples and QCs (blind and known).

8.3.11. Recalibrate the instrument with standards every 8 to 12 readings.

8.3.12. When finished, switch the flame **ON/OFF** key to **OFF**. Press the **CHECK FLOW** key on the auto burner control twice to relieve line pressure.

8.3.13. Turn the **POWER** switch on the automatic burner control to **OFF**.

8.3.14. Switch the PE 5000 to **STANDBY** mode.

9. Emergency Shutdown Procedure

9.1. In case of power failure, turn the **POWER** switch on the PE 5000 to **OFF**.

9.2. Turn the gas valves **OFF**.

9.3. Follow procedures for building power failure.

10. Calculations

10.1. Characteristic concentration (cc).

$$cc = \frac{C \times 0.0044}{A_s},$$

where cc = characteristic concentration for flame AA,
C = concentration of standard,
0.0044 = 1% absorbance, and
A_s = absorbance of standard.

11. Proper Waste Disposal Practices

11.1. Solid Waste

11.1.1. Solid waste contaminated with hazardous chemicals above the level of concern is not generated during the routine preparation of QC samples for analysis for inorganic contaminants.

11.1.2. If a solid waste is generated that may be contaminated at a level of concern, the appropriate paperwork is completed on a case-by-case basis.

11.1.2.1. A Waste Profile Request Form (WPRF) describing the solid waste is completed and sent to the Waste Management Group for review.

11.1.2.2. If the Waste Management Group determines that the solid waste is contaminated below the level of concern, the waste is disposed of as ordinary laboratory trash.

11.1.2.3. If the Waste Management Group determines that the solid waste is contaminated above the level of concern, pickup of the contaminated waste is requested as described in Sec. 9.3.

11.2. Liquid Waste

11.2.1. Liquid waste containing hazardous contaminants, such as solutions of trace metals, is accumulated in a coated glass jar in a secondary containment tray and is kept segregated from liquid waste contaminated with organic or radioactive substances or cyanide.

11.2.2. The bottle is labeled with a hazardous waste label and a label indicating its use for trace-metal waste.

11.2.3. The bottle is opened only for the period of time necessary to add waste to it.

11.2.4. When the bottle is full, it is capped and kept in the secondary containment tray pending pickup by the Waste Management Group.

11.2.5. A new bottle is labeled for further use.

11.3. Waste Pickup

11.3.1. Pickup by the Waste Management Group of solid waste or a full bottle of liquid waste containing trace metals is requested using the current Chemical Waste Disposal Request Form (CWDR). The current Waste

Profile Request Form (WPRF) that describes the waste is referenced on the CWDR.

11.3.2. The Waste Management Group picks up the waste for disposal in accord with Laboratory policy.

12. Source Materials

12.1. Perkin-Elmer Corp., *Analytical Methods for Atomic Absorption Spectroscopy* (Norwalk, CT, 1976).

12.2. Perkin-Elmer Corp., *Instructions: Zeeman/5000 System* (Norwalk, CT, 1982).

12.3. U.S. Environmental Protection Agency, "Methods for Chemical Analysis of Water and Wastes," EPA-600/4-79-020 (rev. March 1983).

12.4. U.S. Environmental Protection Agency, "Test Methods for Evaluation of Solid Waste: Laboratory Manual of Physical and Chemical Methods," SW-846 (Nov. 1986).

12.5. "Chemical, Hazardous, and Mixed Waste," Administrative Requirement 10-3, Chapter 1 in Los Alamos National Laboratory *Environment, Safety, and Health Manual* (most recent edition).

THALLIUM ON FILTERS — GRAPHITE FURNACE AA

Analyte: Thallium	**Method No.:** EI200
Matrix: Filters	**Detection Limit:** 5.0 μg/L
Procedure: Graphite furnace atomic absorption	**Accuracy and Precision:** 100% ± 1.0% RSD
Effective Date: 09/30/91	**Authors:** Michael G. Bell Barbara J. Hemberger

SAFETY NOTE: Before beginning this procedure, read all of the Material Safety Data Sheets for the chemicals listed in Sec. 6. Read Sec. 4.3 of the EM-9 Safety Manual for information on personal protective clothing and equipment.

1. Principle of Method

1.1. Thallium in solution may be readily determined by graphite furnace atomic absorption spectroscopy. The method is applicable to Tl on filters. Samples are acid-leached or prepared by total digestion with concentrated nitric acid.

2. Accuracy and Precision

2.1. The determination of thallium in 6 in-house quality control samples (84.6 μg/L) over an 8-month period had a mean of 84.3 μg/L and a relative standard deviation (RSD) of 1.0%.

3. Collection and Storage of Samples.

3.1. There are no special requirements for filters sealed in their containers.

4. Interferences

4.1. Contamination is of prime concern during sample preparation. Periodically clean the work area, including the bench top, to eliminate environmental contamination. Use acid-washed sample cups in the autosampler.

4.2. Chemical interferences can be controlled by the addition of a matrix modifier to all samples and standards. Refer to Perkin-Elmer chart 0993-8199 Rev. D (11/89), or to the PE Methods of Analysis for AAS for the appropriate matrix modifier.

4.3. Silica from the glassware will grow into the sample solution during and following sample processing. To control this problem, use sterile disposable 50-mL polypropylene centrifuge or 15-mL polypropylene tubes in the sample digestion steps.

5. Apparatus

5.1. Polypropylene tubes: 15- and 50-mL, sterile polypropylene, with caps.

5.2. Rainin pipettes with disposable tips.

5.3. Wash bottles: 125-mL, polypropylene, screw tops.

5.4. An automatic sample shaker.

5.5. Perkin-Elmer 5000 atomic absorption instrument: equipped with a Zeeman Graphite Furnace or equivalent.

5.6. Required gas for the above instrument is ultrapure argon.

5.7. Hot plate with aluminum heating block drilled to hold centrifuge tubes.

6. Reagents

6.1. Nitric acid (low-temperature redistilled acid, LTRD).

6.2. Double-deionized water.

6.3. ASTM Type I water (>10 MΩ/cm resistivity, <0.1 μmho/cm conductivity).

6.4. Appropriate matrix modifier for all samples, standards, and QCs.

6.5. Secondary standards for making the appropriate standard curves.

7. Sample Preparation Procedure

7.1. Place filters in 15-mL polypropylene tubes and add 10 mL of 1% nitric acid, LTRD or Ultrex grade, and put caps on securely.

7.1.1. Samples should include a blind QC, customer blank filter, and an extraction blank.

7.1.2. Put samples on the shaker for a minimum of 4 h for extraction.

7.1.3. Add the sample and standards to acid-cleaned sample cups.

7.1.4. For total digestion, place the sample filter in a 50-mL centrifuge tube and add 10 mL of concentrated nitric acid. Heat in an aluminum block to near dryness.

8. Instrument Procedure

8.1. Instrument power and gases check.

8.1.1. Turn the **POWER SWITCH** to the PE5000 Atomic Absorption (AA) to **ON**.

8.1.2. Turn **ON** the argon supply valve after checking the pressure at the tank. Pressure must be over 100 psi or the tank must be changed.

8.1.3. Turn the AA switch from **STANDBY** mode to **RUN**.

8.1.4. Make sure the exhaust hood over the graphite furnace is functioning.

8.2. Instrument setup.

8.2.1. Insert the thallium lamp into the turret oriented toward the ETVAA and plug it in.

8.2.2. Enter **turret lamp number** into keyboard.

8.2.3. Enter recommended **lamp milliamps** (mA) or **watts** depending on lamp type (EDL/HCL).

8.2.3.1. Warm up the EDL and/or HCL lamp for a minimum of 20 min.

8.2.4. Enter **lamp slit width** using **LOW SLIT** key for ETVAA.

8.2.5. Enter **lamp wavelength** using **LAMBDA PEAK** key.

8.2.6. Turn AA switch inside lamp housing to **ICP/ZAA** position.

8.3. Keyboard setup.

8.3.1. Set **SIGNAL** key to **PK AREA** (peak area).

8.3.2. Turn **REC ABS** (record absorbance) signal key **ON**.

8.3.3. Enter **AVG** (average) number (if used).

8.3.4. Enter **CONC MODE** (concentration).

8.4. Furnace setup.

8.4.1. Press **ZAA** key.

8.4.2. Turn **ACCESSORY** knob to **ON** position.

8.4.3. Turn chiller **ON** and check that the water level is above the coils.

8.4.4. Check that the water bottle for distilled water rinse on the autosampler is full.

8.4.5. Turn **ON** the HGA-500 programmer.

8.4.5.1. Enter the temperature program for the element from the ETVAA procedure manual and store the procedure number.

8.5. Computer setup.

8.5.1. Turn PE AA Data System 10 computer **master switch** to **ON**.

8.5.2. Setup ID/WT file.

8.5.3. Turn **print button** on PE5000 keyboard **ON** and store the program.

8.6. Set up autosampler.

8.6.1. Recalibrate the standard curve every 8 to 12 samples.

8.6.2. Enter the number of standards (# stds).

8.6.3. Enter the last sample number (last samp).

8.6.4. Enter the sample volume (samp vol).

8.6.5. Enter the alternate volume (alt vol) for the matrix modifier if used.

8.6.6. Enter the instrument program number (inst prog).

8.6.7. Enter the HGA program number (HGA prog).

8.7. Graphite furnace setup.

8.7.1. Open the furnace and clean or replace the graphite tube. Use the tube with or without the platform depending on the element.

8.7.2. If inserting a new tube, condition it with the manual temperature key.

8.7.3. Using the alignment tool, reinsert the graphite tube and close the furnace.

8.7.4. Using the manual temperature key, set the pyrometer to the atomization temperature of the element and balance the lights (red/green) using the calibration (CAL) knob.

8.7.5. Place the AS40 in **STANDBY** mode and align the autosampler arm. Check the depth of the sample delivery inside the tube and inside the samples. Exit **STANDBY** mode.

8.7.6. Remove and check the furnace lenses. Reinsert the lenses and check the absorbance. If the absorbance reads above 0.100, clean the lenses.

8.7.7. Put samples and standards into the autosampler tray and cover with the dust cover to prevent contamination.

8.7.8. Put the matrix modifier in the holder position, if required.

8.7.9. Check the blank and standards manually.

8.7.10. Calculate the characteristic concentration (cc). If it is within ±20% of chart value (0993-8199 Rev. D 11/89) start the run.

8.7.11. Enter **collect data** mode on PE Data System 10 computer and follow instructions.

8.7.12. After run is complete, press to **DISK** key on PE Data System 10 **twice**.

8.7.13. Select **report** mode on the computer, follow instructions, and print out the final report.

8.7.14. When finished, shut off the chiller, argon gas supply, lamps, EDL power supply, and computer.

8.7.15. Place the autosampler, HGA Programmer, and PE5000 in standby mode.

9. Emergency Shutdown Procedure

9.1. In case of power failure, turn **POWER SWITCH** on PE5000 AA to **OFF**.

9.2. Turn **off** the **gas valves**.

9.3. Follow building power failure procedures.

10. Calculations

10.1. Characteristic concentration (cc).

$$cc = \frac{C \times V \times 0.0044}{A_s},$$

where cc = characteristic concentration for ETVAA,
C = concentration of standard (μg/L),
V = sample aliquot (μL),
A_s = absorbance of standard, and
0.0044 = 1% absorbance.

11. Source Material

11.1. *Analytical Methods for Atomic Absorption Spectrophotometry*, (Perkin-Elmer, Norwalk, Conn., 1976).

11.2. *Instructions: Zeeman/5000 System*, (Perkin-Elmer, Norwalk, Conn., 1982).

11.3. Methods for Chemical Analysis of Water and Wastes, EPA-600/4-79-020 U.S. Environmental Protection Agency (rev. March 1983).

11.4. Perkin-Elmer chart 0993-8199 Rev. D (11/89).

THALLIUM IN WATER AND SOIL EXTRACTS — GRAPHITE FURNACE AA

Analyte: Thallium	**Method No.:** EI205
Matrix: Water, waste water, and soil extracts	**Detection Limit:** 5.0 μg/L
Procedure: Graphite furnace atomic absorption	**Accuracy and Precision:** 100% ± 1.0% RSD
Effective Date: 09/30/91	**Authors:** Michael G. Bell Barbara J. Hemberger

SAFETY NOTE: Before beginning this procedure, read all of the Material Safety Data Sheets for the chemicals listed in Sec. 6. Read Sec. 4.3 of the EM-9 Safety Manual for information on personal protective clothing and equipment.

1. Principle of Method

1.1. This procedure is based on Environmental Protection Agency (EPA) method 279.2 and SW846 method 7841.

1.2. Thallium in solution may be readily determined by graphite furnace atomic absorption spectroscopy. The method is applicable to Tl in drinking, surface, and saline waters and in domestic and industrial wastes.

1.3. Drinking water free of particulate matter may be analyzed directly. Ground water, other aqueous samples, TCLP extracts, industrial wastes, soils, sludges, sediments, and other solid wastes require digestion before analysis.

2. Accuracy and Precision

2.1. The determination of thallium in 6 in-house quality control samples (84.6 μg/L) over an 8-month period had a mean of 84.3 μg/L and a relative standard deviation (RSD) of 1.0%.

3. Collection and Storage of Samples.

3.1. Preserve samples with nitric acid (HNO_3) at a pH <2.0. Complete analysis within 6 months.

4. Interferences

4.1. Contamination is of prime concern during sample preparation. Periodically clean the work area, including the bench top, to eliminate environmental contamination. Use acid-washed sample cups in the autosampler.

4.2. Chemical interferences can be controlled by the addition of a matrix modifier to all samples and standards. Refer to Perkin-Elmer chart 0993-8199 Rev. D (11/89), or to the PE Methods of Analysis for AAS for the appropriate matrix modifier.

4.3. Silica from the glassware will grow into the sample solution during and following sample processing. To control this problem, use sterile disposable 50-mL polypropylene centrifuge tubes in the sample digestion steps.

5. Apparatus

5.1. Centrifuge tubes: 50-mL, sterile polypropylene.

5.2. Rainin pipettes with disposable tips.

5.3. Wash bottles: 125-mL, polypropylene, screw tops.

5.4. Hot plate: with aluminum heating block drilled to hold centrifuge tubes.

5.5. Perkin-Elmer 5000 atomic absorption instrument: equipped with a Zeeman graphite furnace or equivalent.

5.6. Required gas for the above instrument is ultrapure argon.

6. Reagents

6.1. Nitric acid (low-temperature redistilled acid, LTRD).

6.2. Hydrochloric acid (low-temperature redistilled acid, LTRD).

6.3. Double-deionized water.

6.4. ASTM Type I water (>10 MΩ/cm resistivity, <0.1 μhmo/cm conductivity).

6.5. Appropriate matrix modifier for all samples, standards, and QCs.

6.6. Secondary standards for making the appropriate standard curves.

7. Sample Preparation Procedure

7.1. To determine total recoverable elements in water, waste water, and soil extracts, take a 50-mL aliquot from an acid-preserved sample containing not more than 0.25% (wt/vol) total solids. Place the aliquot in a 50-mL disposable sterile polypropylene centrifuge tube.

7.1.1. Add 500 μL of LTRD HNO_3 and 250 μL of Ultrex or LTRD HCl to each sample.

7.1.2. Heat on a hot plate without boiling (approximately 85°C) until the volume is reduced to 5-10 mL.

7.1.3. Loosely cover the tube with the cap and reflux for 30 min.

7.1.4. Allow the sample to cool, and dilute to 50 mL with ASTM Type I water.

7.1.5. Run one digested blank and one digested spike for each digested batch.

7.1.6. Run a duplicate and a spike for 10-20% of the samples.

7.1.7. For TCLP samples, run a spike for every sample and 20% duplicates.

7.1.8. The analysis should be performed before the EPA regulatory holding times expire.

7.1.9. Add sample and standards to acid-cleaned sample cups.

8. Instrument Procedure

8.1. Instrument power and gases check.

8.1.1. Turn the **POWER SWITCH** to the PE5000 Atomic Absorption (AA) to **ON**.

8.1.2. Turn **ON** the argon supply valve after checking the pressure at the tank. Pressure must be over 100 psi or the tank must be changed.

8.1.3. Turn the AA switch from **STANDBY** mode to **RUN**.

8.1.4. Make sure the exhaust hood over the graphite furnace is functioning.

8.2. Instrument setup.

8.2.1. Insert the thallium lamp into the turret oriented toward the ETVAA and plug it in.

8.2.2. Enter **turret lamp number** into keyboard.

8.2.3. Enter recommended **lamp milliamps** (mA) or **watts** depending on lamp type (EDL/HCL).

8.2.3.1. Warm up the EDL and/or HCL lamp for a minimum of 20 min.

8.2.4. Enter **lamp slit width** using **LOW SLIT** key for ETVAA.

8.2.5. Enter **lamp wavelength** using **LAMBDA PEAK** key.

8.2.6. Turn AA switch inside lamp housing to **ICP/ZAA** position.

8.3. Keyboard setup.

8.3.1. Set **SIGNAL** key to **PK AREA** (peak area).

8.3.2. Turn **REC ABS** (record absorbance) signal key **ON**.

8.3.3. Enter **AVG** (average) number (if used).

8.3.4. Enter **CONC MODE** (concentration).

8.4. Furnace setup.

8.4.1. Press **ZAA** key.

8.4.2. Turn **ACCESSORY** knob to **ON** position.

8.4.3. Turn chiller **ON** and check that the water level is above the coils.

8.4.4. Check that the water bottle for distilled water rinse on the autosampler is full.

8.4.5. Turn **ON** the HGA-500 programmer.

8.4.5.1. Enter the temperature program for the element from the ETVAA procedure manual and store the procedure number.

8.5. Computer setup.

8.5.1. Turn PE AA Data System 10 computer **master switch** to **ON**.

8.5.2. Set up ID/WT file.

8.5.3. Turn **print button** on PE5000 keyboard **ON** and store the program.

8.6. Set up autosampler.

8.6.1. Recalibrate the standard curve every 8 to 12 samples.

8.6.2. Enter the number of standards (# stds).

8.6.3. Enter the last sample number (last samp).

8.6.4. Enter the sample volume (samp vol).

8.6.5. Enter the alternate volume (alt vol) for the matrix modifier if used.

8.6.6. Enter the instrument program number (inst prog).

8.6.7. Enter the HGA program number (HGA prog).

8.7. Graphite furnace setup.

8.7.1. Open the furnace and clean or replace the graphite tube. Use the tube with or without the platform depending on the element.

8.7.2. If inserting a new tube, condition it with the manual temperature key.

8.7.3. Using the alignment tool, reinsert the graphite tube and close the furnace.

8.7.4. Using the manual temperature key, set the pyrometer to the atomization temperature of the element and balance the lights (red/green) using the calibration (CAL) knob.

8.7.5. Place the AS40 in **STANDBY** mode and align the autosampler arm. Check the depth of the sample delivery inside the tube and inside the samples. Exit **STANDBY** mode.

8.7.6. Remove and check the furnace lenses. Reinsert the lenses and check the absorbance. If the absorbance reads above 0.100, clean the lenses.

8.7.7. Put samples and standards into the autosampler tray and cover with the dust cover to prevent contamination.

8.7.8. Put the matrix modifier in the holder position, if required.

8.7.9. Check the blank and standards manually.

8.7.10. Calculate the characteristic concentration (cc). If it is within ±20% of chart value (0993-8199 Rev. D 11/89) start the run.

8.7.11. Enter **collect data** mode on PE Data System 10 computer and follow instructions.

8.7.12. After run is complete, press to **DISK** key on PE Data System 10 **twice**.

8.7.13. Select **report** mode on the computer, follow instructions, and print out the final report.

8.7.14. When finished, shut off chiller, argon gas supply, lamps, EDL power supply, and computer.

8.7.15. Place the autosampler, HGA Programmer, and PE5000 in standby mode.

9. Emergency Shutdown Procedure

9.1. In case of power failure, turn **POWER SWITCH** on PE5000 AA to **OFF**.

9.2. Turn **off** the **gas valves**.

9.3. Follow building power failure procedures.

10. Calculations

10.1. Characteristic concentration (cc).

$$cc = \frac{C \times V \times 0.0044}{A_s},$$

where cc = characteristic concentration for ETVAA,
C = concentration of standard (μg/L),
V = sample aliquot (μL),
A_s = absorbance of standard, and
0.0044 = 1% absorbance.

11. Source Material

11.1. *Analytical Methods for Atomic Absorption Spectrophotometry*, (Perkin-Elmer, Norwalk, Conn., 1976).

11.2. *Instructions: Zeeman/5000 System*, (Perkin-Elmer, Norwalk, Conn., 1982).

11.3. Methods for Chemical Analysis of Water and Wastes, EPA-600/4-79-020 U.S. Environmental Protection Agency, (rev. March 1983).

11.4. Perkin-Elmer chart 0993-8199 Rev. D (11/89).

11.5. "Test Methods for Evaluation of Solid Waste: Laboratory Manual of Physical and Chemical Methods," EPA report no. SW-846.

ZINC IN WATER AND SOIL EXTRACTS — FLAME AA

Analyte: Zinc	**Method No.:** EI210
Matrix: Water, waste water, and soil extracts	**Detection Limit:** 5.0 μg/L
Procedure: Flame atomic absorption	**Accuracy and Precision:** 100% ± 4.0% RSD
Effective Date: 09/23/91	**Authors:** Michael G. Bell Barbara J. Hemberger

SAFETY NOTE: Before beginning this procedure, read all of the Material Safety Data Sheets for the chemicals listed in Sec. 6. Read Sec. 4.3 of the EM-9 Safety Manual for information on personal protective clothing and equipment. Read Sec. 11 of this procedure and Source Material 12.5 for proper waste disposal practices.

1. Principle of Method

1.1. This procedure is based on Environmental Protection Agency (EPA) method 289.1 and SW-846 method 7950.

1.2. Zinc in solution may be readily determined by atomic absorption spectroscopy. The method is simple and rapid and is applicable to Zn in drinking, surface, and saline waters and in domestic and industrial wastes.

1.3. Drinking water free of particulate matter may be analyzed directly. Ground water, other aqueous samples, TCLP extracts, industrial wastes, soils, sludges, sediments, and other solid wastes require digestion before analysis.

2. Accuracy and Precision

2.1. The determination of zinc in nine in-house quality control samples (66 μg/L) over a nine-month period had a mean of 67.2 μg/L and a relative standard deviation (RSD) of 4.0%.

3. Collection and Storage of Samples

3.1. Preserve samples with nitric acid (HNO_3) at a pH <2.0. Complete analysis within six months.

4. Interferences

4.1. Contamination is of prime concern during sample preparation. The work area, including the bench top, should be periodically cleaned to eliminate environmental contamination.

4.2. Chemical interferences are matrix dependent.

4.3. Silica from the glassware will grow into the sample solution during and following sample processing. Use sterile disposable 50-mL polypropylene centrifuge tubes in the sample digestion steps to control this problem.

5. Apparatus

5.1. Centrifuge tubes: 50-mL, sterile polypropylene.

5.2. Rainin pipettes with disposable tips.

5.3. Wash bottles: 125-mL, polypropylene, screw tops.

5.4. Hot plate: with aluminum heating block drilled to hold centrifuge tubes.

5.5. Perkin-Elmer 5000 atomic absorption spectrometer or equivalent.

5.6. Gases for the above instrument: air, acetylene, nitrous oxide, argon.

6. Reagents

6.1. Nitric acid (low-temperature redistilled acid, LTRD).

6.2. Hydrochloric acid (low-temperature redistilled acid, LTRD).

6.3. Double-deionized water.

6.4. ASTM Type I water (>10 MΩ/cm resistivity, <0.1 μmho/cm conductivity).

7. Sample Preparation Procedure

7.1. To determine total recoverable elements in water or waste water, take a 50-mL aliquot from an acid-preserved sample containing not more than 0.25% (wt/vol) total solids. Place the aliquot in a sterile disposable 50-mL polypropylene centrifuge tube.

7.1.1. Add 500 μL of LTRD HNO_3 and 250 μL of Ultrex or LTRD HCl to each sample.

7.1.2. Heat on a hot plate without boiling (approximately 85°C) until the final volume is reduced to 5-10 mL.

7.1.3. Loosely cover the tube with the cap and reflux for 30 min.

7.1.4. Allow the sample to cool and dilute to 50 mL with ASTM Type I water.

7.1.5. Run one digested blank and one digested spike with each digested batch.

7.1.6. Run a duplicate and a spike for 10-20% of the samples.

7.1.7. For TCLP samples, run a spike for every sample and run 20% duplicates.

8. Instrument Procedure

8.1. Power instrument and check gases.

8.1.1. Turn the **POWER** switch on the Perkin-Elmer (PE) 5000 atomic absorption (AA) spectrometer to **ON**.

8.1.2. Turn the **POWER** switch on the PE 5000 automatic burner control to **ON**.

8.1.3. Turn the **AIR SUPPLY** valve **ON**.

8.1.4. Check the pressure in the acetylene tank; if it is <100 psi, change the tank. Turn the **ACETYLENE SUPPLY** valve **ON**.

8.1.5. Turn the **NITROUS OXIDE SUPPLY** valve **ON**, if necessary.

8.1.6. Turn the AA switch from **STANDBY** mode to **RUN**.

8.1.7. Make sure the exhaust hood is functioning.

8.1.8. Make sure the fluids in the drain vessel and drain loop are at their proper levels.

8.2. Instrument setup.

8.2.1. Insert the zinc lamp in the turret and plug it in.

8.2.2. Enter the **turret lamp number** on the keyboard.

8.2.3. Enter the recommended **lamp milliamps** (mA).

8.2.4. Enter the **lamp slit width** using the **HIGH SLIT** key for flame AA.

8.2.5. Enter the **lamp wavelength** using the **LAMBDA PEAK** key.

8.2.6. For **signal keys**, enter the **CONTINUOUS** key for setup.

8.2.7. Press the **RECORD ABSORBANCE** key.

8.2.8. Set the **MODE** key to **ABSORBANCE.**

8.2.9. If the wavelength is >300 nm, use the **AA-MODE** key.

8.2.10. If the wavelength is <300 nm, use the **AA-BG MODE** key.

8.2.11. Press the **SETUP** key and adjust the lamp for maximum absorbance.

8.2.11.1. If the absorbance is >80, press the **GAIN** key and continue the lamp adjustment.

8.2.11.2. When the maximum absorbance is reached, turn the **SETUP** key to **OFF.**

8.2.12. Set the **TIME** key to 0.5 s.

8.2.13. Press the **AZ** (autozero) key. Absorbance should read zero.

8.2.14. Install the 10-cm burner head for air-acetylene analysis and the 5-cm head for nitrous oxide-acetylene.

8.2.15. Adjust the burner head height.

8.2.16. Set oxidant and acetylene flow from Table 8.2 in PE *Analytical Methods for AAS.* (source material 12.1).

8.2.17. Shut the burner shield door and light the flame using the flame **ON/OFF** key on the burner assembly.

8.2.18. Aspirate double-deionized water while the flame is lit.

8.2.19. Aspirate the standard and adjust the instrument for maximum absorbance.

8.3. Running samples.

8.3.1. Enter S1, S2, and S3 as directed for standards in *Analytical Methods for AAS.*

8.3.2. Reset **TIME** key to 3 to 6 s.

8.3.3. Press the signal **HOLD** key.

8.3.4. Select **AVERAGE** key if desired.

8.3.5. Aspirate the known standard and press the **READ** key.

8.3.6. Calculate the characteristic concentration (cc). The result should be within ±20% of the value in *Analytical Methods for AAS*.

8.3.7. Aspirate the calibration-curve standards and read the absorbance.

8.3.8. Switch the **MODE** key to **CONC** (concentration).

8.3.9. Aspirate the standards to set concentration keys as needed.

8.3.10. Read samples and QCs (blind and known).

8.3.11. Recalibrate the instrument with standards every 8 to 12 readings.

8.3.12. When finished, switch the flame **ON/OFF** key to **OFF**. Press the **CHECK FLOW** key on the auto burner control twice to relieve line pressure.

8.3.13. Turn the **POWER** switch on the automatic burner control to **OFF**.

8.3.14. Switch the PE 5000 to **STANDBY** mode.

9. Emergency Shutdown Procedure

9.1. In case of power failure, turn the **POWER** switch on the PE 5000 to **OFF**.

9.2. Turn the gas valves **OFF**.

9.3. Follow procedures for building power failure.

10. Calculations

10.1. Characteristic concentration (cc).

$$cc = \frac{C \times 0.0044}{A_s},$$

where cc = characteristic concentration for flame AA,
C = concentration of standard,
0.0044 = 1% absorbance, and
A_s = absorbance of standard.

11. Proper Waste Disposal Practices

11.1. Solid Waste

11.1.1. Solid waste contaminated with hazardous chemicals above the level of concern is not generated during the routine preparation of QC samples for analysis for inorganic contaminants.

11.1.2. If a solid waste is generated that may be contaminated at a level of concern, the appropriate paperwork is completed on a case-by-case basis.

11.1.2.1. A Waste Profile Request Form (WPRF) describing the solid waste is completed and sent to the Waste Management Group for review.

11.1.2.2. If the Waste Management Group determines that the solid waste is contaminated below the level of concern, the waste is disposed of as ordinary laboratory trash.

11.1.2.3. If the Waste Management Group determines that the solid waste is contaminated above the level of concern, pickup of the contaminated waste is requested as described in Sec. 9.3.

11.2. Liquid Waste

11.2.1. Liquid waste containing hazardous contaminants, such as solutions of trace metals, is accumulated in a coated glass jar in a secondary containment tray and is kept segregated from liquid waste contaminated with organic or radioactive substances or cyanide.

11.2.2. The bottle is labeled with a hazardous waste label and a label indicating its use for trace-metal waste.

11.2.3. The bottle is opened only for the period of time necessary to add waste to it.

11.2.4. When the bottle is full, it is capped and kept in the secondary containment tray pending pickup by the Waste Management Group.

11.2.5. A new bottle is labeled for further use.

11.3. Waste Pickup

11.3.1. Pickup by the Waste Management Group of solid waste or a full bottle of liquid waste containing trace metals is requested using the current Chemical Waste Disposal Request Form (CWDR). The current Waste

Profile Request Form (WPRF) that describes the waste is referenced on the CWDR.

11.3.2. The Waste Management Group picks up the waste for disposal in accord with Laboratory policy.

12. Source Materials

12.1. Perkin-Elmer Corp., *Analytical Methods for Atomic Absorption Spectroscopy* (Norwalk, CT, 1976).

12.2. Perkin-Elmer Corp., *Instructions: Zeeman/5000 System* (Norwalk, CT, 1982).

12.3. U.S. Environmental Protection Agency, "Methods for Chemical Analysis of Water and Wastes," EPA-600/4-79-020 (rev. March 1983).

12.4. U.S. Environmental Protection Agency, "Test Methods for Evaluation of Solid Waste: Laboratory Manual of Physical and Chemical Methods," SW-846 (Nov. 1986).

12.5. "Chemical, Hazardous, and Mixed Waste," Administrative Requirement 10-3, Chapter 1 in Los Alamos National Laboratory *Environment, Safety, and Health Manual* (most recent edition).

BARIUM IN SOILS — ACID DIGESTION AND ICPAES

Analyte: Barium	**Method No.:** EI300
Matrix: Soils	**Detection Limits:** See Section 2.
Procedure: Inductively coupled plasma atomic emission spectroscopy (ICPAES) Model ARL 3520	**Accuracy and Precision:** See Section 3.1.
	Linear Working Range: See Section 2.
Effective Date: 01/03/89 to 10/01/91	**Author:** Janet D. Morgan

SAFETY NOTE: Before beginning this procedure, read all of the Material Safety Data Sheets for the chemicals listed in Sec. 7. Read Sec. 4.3 of the EM-9 Safety Manual for information on personal protective clothing and equipment.

1. Principle of Method

1.1. A representative 0.25-g sample is digested in hydrofluoric (HF) and nitric acids.

2. Limits of Detection and Linear Working Range

2.1. The following table lists 2 σ limits of detection and linear working range concentrations (LWRC). Detection limits, sensitivity, and LWRC of the metals will vary with the matrices and model of spectrometer.

Analyte	Limit of Detection (μg/g)	LWRC (μg/g)
Ba	0.2	16.0-1600

3. Accuracy and Precision

3.1. Accuracy and precision have not been tabulated.

Determination of Barium								
Sample 1			Sample 2			Sample 3		
00.00549			00.00596			00.00576		
TV	MRV	RSD	TV	MRV	RSD	TV	MRV	RSD
414	400.5	6.4	966	1077	6.8	409	393	5.4

TV = True value.
MRV = Mean reported value.
RSD = Relative standard deviation.

4. Interferences

4.1. Soils can contain diverse matrix types, each of which may present its own analytical challenge. Spiked samples and any relevant standard reference materials should be processed to aid in determining interferences along with performing analytical scans and using "λ", a table of ICP lines and potential interferences.

4.2. The high amounts of sulfur present in most soil samples will form barium sulfate, resulting in low Ba recoveries. For this reason, hydrofluoric acid is required in this procedure.

4.3. Particulates in the digestate that may clog the nebulizer should be removed by filtration.

4.4. Physical interferences are effects associated with the sample nebulization and transport processes. Changes in viscosity and surface tension can cause significant inaccuracies, especially in samples containing high dissolved solids or high acid concentrations. These interferences can be reduced by diluting the sample and using a peristaltic pump.

4.5. Chemical interferences include molecular compound formation, ionization effects, and solute vaporization effects. Normally, these effects are not significant with the ICP technique. If observed, they can be minimized by careful selection of operating conditions (incident power, observation position, etc.), by acid matrix matching, and by using an internal standard. Chemical interferences are highly dependent on matrix type and the specific analyte.

4.6. Spectral interferences are caused by: (1) overlap of a spectral line from another element, (2) unresolved overlap of molecular band spectra, (3) background contribution from continuous or recombination phenomena, and (4) stray light from the line emission of high-concentration elements.

4.6.1. Spectral overlap can be compensated for by computer-correcting the raw data after monitoring and measuring the interfering element. Unresolved overlap requires selection of an alternate wavelength. Background contribution and stray light can usually be compensated for by a background correction adjacent to the analyte line.

4.6.2. The interference effects must be evaluated for each instrument, because the intensities will vary with operating conditions, power, viewing height, argon flow rate, etc.

5. Collection and Storage of Samples

5.1. All samples must be collected using a sampling plan that addresses the considerations discussed in Chapter Nine of Environmental Protection Agency Laboratory Manual, Volume II, September 1986.

5.2. All sample containers must be prewashed with detergents, acids, and Type II water. Plastic and glass containers are both suitable. See Chapter Three, Section 3.1.3, in the Environmental Protection Agency Laboratory Manual, Volume 1A, November 1986 for further information.

5.3. Nonaqueous samples must be refrigerated upon receipt and analyzed as soon as possible.

6. Apparatus

6.1. Teflon beakers: 250-mL.

6.2. Teflon covers.

6.3. Nalgene filter apparatus with 0.45-μm pore size.

6.4. Hot plate.

6.5. ICPAES. Model ARL 3520.

6.6. Falcon 2059 polypropylene tube with cap, 15-mL.

6.7. Gilson autosampler with carrousel.

6.8. Rabbit peristaltic pump.

6.9. Radio-frequency generator.

7. Reagents

NOTE: All reagents should be analyzed and monitored for impurities.

7.1. ASTM Type II Water.

7.2. Nitric acid (concentrated, low-temperature redistilled, LTRD). If the method blank is less than the method detection limit (<MDL), the acid can be used.

7.3. Hydrofluoric acid (concentrated, Ultrex pure). If the method blank is less than the MDL, the acid can be used.

7.4. Argon gas supply. Welding grade or better.

7.5. Nitric acid (3% vol/vol). Prepare from LTRD and Type II water.

7.6. Reagent blank. Composed of the reagents in the same volume as used in the processing of the samples. The reagent blank must be carried through the complete procedure and contain the same acid concentration in the final solution as the sample solution.

7.7. Standard stock solutions (1000 μg/mL). For the analytes of interest, purchased from a traceable source.

7.8. Two types of quality control (QC) samples are required. One is an aqueous QC used to check the validity of the standard curve and the other, a soil QC, is taken through the digestion to check the validity of the digestion process.

7.9. Spike solution A (125 mg/L Ba standard). Prepare from the standard stock solution.

8. Calibration and Standards

NOTE: Standards are prepared from a stock solution of traceable material.

8.1. Working standards (mg/L) in 3% HNO_3.

Analyte	REFBLK	STD0	STD1	STD2	STD3
Ba	0.0	0.0	0.2	2.0	20.0

9. Procedure

9.1. Sample digestion.

9.1.1. Mix the sample thoroughly to achieve homogeneity. For each digestion procedure, weigh 0.25 g sample to the nearest 0.01 g and transfer to a Teflon beaker. Include a reagent blank and 10% duplicate and spike samples. Add 2 mL of spike solution A to the spike sample, which will be diluted to a final volume of 50 mL and a final concentration of 5 mg/L Ba.

9.1.2. Add 2 mL of HF and mix the slurry. Heat the sample to approximately 95°C and take to near dryness. Allow the sample to cool. Add 5.0 mL of concentrated HNO_3, and take to near dryness.

9.1.3. After the sample has cooled, add approximately 20 mL of 3% HNO_3 and reflux for 30 min. Cool the beaker.

9.1.4. Transfer the sample to a Nalgene filter unit and filter to a final volume of 50 mL.

9.1.5. The diluted sample has an acid concentration of approximately 3% (vol/vol) HNO_3 and is ready for analysis.

9.2. Instrument operation.

9.2.1. The analyst must be familiar with the ICPAES software in order to operate the instrument. Refer to the instrument manual.

9.2.2. Follow the instructions provided by the instrument's manufacturer.

9.2.3. Allow the instrument to become thermally stable before beginning the calibration (at least 30 min).

9.2.4. Close the optical gate to profile the instrument.

9.2.5. The optical gate will remain open for the rest of the operation.

9.2.6. Using the program procedure **BATOT**, scan any new matrices to determine the necessity and measuring position for background corrections or other interferences.

9.2.7. Set up the autosampler for further analysis.

9.2.8. Data can be captured using Microsoft Excel.

9.2.9. Transfer the standards and samples to Falcon tubes.

9.2.10. Use **CAL** to run all working standards and produce calibration curves for all elements.

9.2.11. Due to the complexity of the matrices, no internal standard is used and duplicates and spikes are employed.

9.2.12. Set up a sequence file with a calibration blank, a high standard, a quality control sample, and 10% duplicate and spike samples. Include a calibration blank and a QC sample at 10% intervals. If dilutions were performed, apply the appropriate factors to the samples at this time.

9.2.13. Concentration values for the standard and QC sample should not deviate from the actual value by more than 10%. If they do, re-calibration may be necessary.

9.2.14. Flush the system with 3% HNO_3 before the analysis of each sample.

9.2.15. If the analyte concentration is greater than the highest standard, reanalyze after making the appropriate dilution.

9.2.16. Transfer data to Microsoft Excel for calculations.

9.2.17. See Table I for instrument log.

10. Calculations

10.1. Perform all reagent blank corrections and percent recovery calculations using EXCEL Window software. Report results in $\mu g/g$.

10.2. The duplicate matrix spike sample recovery should be within ± 20% of the actual value. Calculate percent spike recoveries as follows:

$$\%Rec = \frac{100 \times \left(d3 - \left(\frac{d1 + d2}{2}\right)\right)}{Y},$$

where d1 = value first duplicate (mg/L), no spike,
d2 = value second duplicate (mg/L), no spike,
d3 = value of replicates and spikes (mg/L), and
Y = concentration of spike added (mg/L).

11. Source Materials

11.1. *United States Environmental Protection Agency Test Methods for Evaluating Solid Waste.* Chapter 9, Vol. II Field Manual, 3rd Ed. (Office of Solid Waste and Emergency Response, Washington, DC, 1986).

11.2. *ARL Handbook*, No. AA80770, Vol. 4.1. May 1984.

TABLE I. INSTRUMENT LOG	
Rf Generator Readings	Value
Incident power	1.2 kW
Reflected power	<1 W
Plate current (< 0.65 amp)	0.8 A
P.A. filament voltage (7.1 - 7.9 v)	7.0 V
P.A. voltage (< 4800 v)	3600 V
P.A. grid current (<0.4 amp)	0.16 A
Coolant argon meter reading	28 psi
Plasma argon meter reading	34 psi
Nebulizer argon meter reading	0.44 psi
Nebulizer uptake rate	3 mL/min
Gilson peristaltic pump setting	650
MHDS Nebulizer	

TABLE II. CONDITION TABLE USED "ICPJM"

COND HVPS NAME	FLUSH STAND/ TIME SOURCE	PRE-INT TIME	INTEG TIME	PRE-INT COND	INTEG COND	FATIGUE LAMP	ATTEN-UATORS
ICP4	30	30	3.00000	0	0	00	0000000
1000	11						
ICPSAM	0	20	5.00000	0	0	00	0000000
1000	11						
ICPSJW	0	0	10.0000	0	0	00	0000000
1000	11						
ISCOR	0	5	5.00000	0	0	00	0000000
1000	00						
I	0	0	2.00000	0	0	00	0000000
1000	11						
ICPCON	0	45	2.50000	0	0	00	0000000

TABLE II. CONDITION TABLE USED "ICPJM" (cont)

COND HVPS NAME	FLUSH STAND/ TIME SOURCE	PRE-INT TIME	INTEG TIME	PRE-INT COND	INTEG COND	FATIGUE LAMP	ATTEN-UATORS
1000	11						
ICPJM	30	30	5.00000	0	0	00	0000000
1000	11						
ICP4EL	30	30	5.00000	0	0	00	0000000
1000	11						

ANIONS IN WATER AND WASTE WATER — IC

Analyte: Chloride (Cl^-), nitrate (NO_3^-), sulfate ($SO_4^=$) fluoride (F^-), bromide (Br^-)	**Method No.:** EI400 **Range:** 1-1000 mg/L
Matrix: Water and waste water	**Detection Limit:** Cl^- 0.5 mg/L, NO_3^- 1 mg/L, $SO_4^=$ 1 mg/L, F^- 0.5 mg/L, Br^- 1 mg/L
Procedure: Ion chromatography	**Accuracy and Precision:** Cl^- 96% ± 4% RSD NO_3^- 98% ± 5% RSD, $SO_4^=$ 104% ± 3% RSD
Effective Date: 09/04/90	**Author:** Harry P. Patterson

SAFETY NOTE: Before beginning this procedure, read all of the Material Safety Data Sheets for the chemicals listed in Sec. 5. Read Sec. 4.3 of the EM-9 Safety Manual for information on personal protective clothing and equipment.

1. Principle of Method

1.1. Ions in the aqueous phase are separated by their affinity for the stationary (resin) phase. The affinity is a function of resin type, ion size, ion charge, ion concentration, and matrix composition of the mobile phase.

1.2. The guard column acts as a trap to prevent contamination of the separator column. The separation actually begins on the guard column.

1.3. The mobile phase then passes through a micromembrane suppressor, which is washed with a regenerant to remove the high background of the column eluant.

1.4. The conductivity meter continuously measures the conductivity of the mobile phase after it passes through the suppressor.

1.5. Unknowns are equated with standards of known concentration as a function of time.

2. Accuracy and Precision

2.1. An EPA QC sample 00.01013, with a Cl^- concentration between 44.6 and 57.4 mg/L and a $SO_4^=$ concentration between 16.3 and 23.1 mg/L, was analyzed with prepared standards. The accuracy and precision for Cl^- were 49.8 ± 1.9 mg/L (N = 20) and for $SO_4^=$ were 25.4 ± 0.6 mg/L (N = 18) at the one-sigma level.

2.2. In-house QC sample 00.97686 was used to determine the accuracy and precision for NO_3^-. The in-house value was 1.98 mg/L. The results of 8 analyses averaged 1.9 ± 0.1 mg/L at the one-sigma level.

2.3. Not enough data has been generated to determine the accuracy and precision for F^- and Br^-.

3. Interferences

3.1. Sample ions must be in the same state as the standard. Complex ions will have different retention times than simple ions and may not elute from the column.

3.2. Samples with ionic strengths that differ significantly from the standards may have retention times considerably different from the standard.

3.3. High concentrations of one species in a sample may distort or swamp an adjacent peak.

4. Apparatus

4.1. Dionex 4000i chromatograph: Dionex Corp., 1228 Titan Way, Sunnyvale, CA. 94088-3603.

4.2. Dionex AI-400 data station: equipped with a mouse, Microsoft Windows, and AI-450 Ver. 3.2 software, Dionex Corp., 1228 Titan Way, Sunnyvale, CA. 94088-3603.

4.3. Dionex C.I.M. module: Dionex Corp., 1228 Titan Way, Sunnyvale, CA. 94088-3603.

4.4. Hewlett Packard Think-Jet printer: Holmans, 401 Wyoming Blvd., Albuquerque, NM.

4.5. Autosampler: Dionex Corp., 1228 Titan Way, Sunnyvale, CA. 94088-3603.

4.6. AS4A anion separator column: equipped with AG4A guard column, Dionex Corp., 1228 Titan Way, Sunnyvale, CA. 94088-3603.

4.7. Volumetric flasks: Class A, various sizes.

4.8. Pipettes: Class A, various sizes.

4.9. Filtering apparatus: with Millipore 0.45-μm filter, VWR Scientific, Los Alamos, NM 87545.

4.10. Filtering flask: 250-mL.

4.11. Glass bottles: 1-L, for delivery of column eluants, Dionex Corp., 1228 Titan Way, Sunnyvale, CA. 94088-3603.

4.12. Gas pressure regulator for He cylinder: VWR Scientific, Los Alamos, NM 87545.

4.13. Syringe: 10-cc, plastic, disposable.

4.14. AMMS suppressor: Dionex Corp., 1228 Titan Way, Sunnyvale, CA. 94088-3603.

4.15. Nalgene pressurized bottle: 4-L, for suppressor regenerant with regulator, Dionex Corp., 1228 Titan Way, Sunnyvale, CA. 94088-3603.

4.16. Drying oven: VWR Scientific, Los Alamos, NM 87545.

4.17. Desiccator: VWR Scientific, Los Alamos, NM 87545.

4.18. Analytical balance: VWR Scientific, Los Alamos, NM 87545.

5. Reagents

5.1. Sodium chloride (reagent-grade). VWR Scientific, Los Alamos, NM 87545.

5.2. Potassium nitrate (reagent-grade). VWR Scientific, Los Alamos, NM 87545.

5.3. Sodium sulfate (reagent-grade). VWR Scientific, Los Alamos, NM 87545.

5.4. Sodium bromide (reagent-grade). VWR Scientific, Los Alamos, NM 87545.

5.5. Sodium fluoride (reagent-grade). VWR Scientific, Los Alamos, NM 87545.

5.6. Sulfuric acid (concentrated, reagent-grade). VWR Scientific, Los Alamos, NM 87545.

5.7. Sulfuric acid regenerant solution (0.025 N). Dilute 2.8 mL of concentrated H_2SO_4 in 4 L of double-deionized water.

5.8. Na_2CO_3 (reagent-grade). VWR Scientific, Los Alamos, NM 87545.

5.9. $NaHCO_3$ (reagent-grade). VWR Scientific, Los Alamos, NM 87545.

5.10. Column eluant. Dissolve 0.191 g of Na_2CO_3 and 0.143 g of $NaHCO_3$ in double-deionized water in a 1-L volumetric flask. Dilute to volume and mix well.

5.11. Helium gas. Regulated to deliver 100 psi, VWR Scientific, Los Alamos, NM 87545.

5.12. Double-deionized water.

5.13. Standard stock solutions (1000 ppm). Dry all reagent chemicals overnight at 105°C in a drying oven. Remove and cool in a desiccator before weighing.

5.13.1. Chloride (1000 ppm). Weigh 1.6484 g of dried NaCl, transfer to a 1-L volumetric flask, dilute to volume with double-deionized water, and mix well.

5.13.2. Nitrate (1000 ppm). Weigh 1.6307 g of dried KNO_3, transfer to a 1-L volumetric flask, dilute to volume with double-deionized water, and mix well.

5.13.3. Sulfate (1000 ppm). Weigh 1.4790 g of dried Na_2SO_4, transfer to a 1-L volumetric flask, dilute to volume with double-deionized water, and mix well.

5.13.4. Fluoride (1000 ppm). Weigh 2.2100 g of dried NaF, transfer to a 1-L volumetric flask, dilute to volume with double-deionized water, and mix well.

5.13.5. Bromide (1000 ppm). Weigh 1.2877 g of dried NaBr, transfer to a 1-L volumetric flask, dilute to volume with double-deionized water, and mix well.

6. Calibration and Standards

6.1. Prepare a mixed standard solution containing 3 ppm Cl^-, 10 ppm NO_3^-, 15 ppm $SO_4^=$, 10 ppm Br^-, and 2 ppm F^-. Pipette 3 mL of 1000 ppm Cl^-, 10 mL of 1000 ppm NO_3^-, 15 mL 1000 ppm $SO_4^=$, 10 mL 1000 ppm Br^-, and 2 mL 1000 ppm F^- standard solutions into a 1-L volumetric flask. Dilute to volume with double-deionized water and mix well.

6.2. Spike solutions (100 ppm).

6.2.1. Cl^- (100 ppm). Dilute 100 mL of 1000 ppm chloride solution to 1 L with double-deionized water and mix well.

6.2.2. NO_3^- (100 ppm). Dilute 100 mL of 1000 ppm nitrate solution to 1 L with double-deionized water and mix well.

6.2.3. $SO_4^=$ (100 ppm). Dilute 100 mL of 1000 ppm sulfate solution to 1 L with double-deionized water and mix well.

6.2.4. Br^- (100 ppm). Dilute 100 mL of 1000 ppm bromide solution to 1 L with double-deionized water and mix well.

6.2.5. F^- (100 ppm). Dilute 100 mL of 1000 ppm fluoride solution to 1 L with double-deionized water and mix well.

6.3. EPA QC sample 00.01404 is used to check the accuracy and precision of the method and instrumentation. The following ranges are acceptable: F^- 0.89 to 1.10 mg/L, Cl^- 48.2 to 55.4 mg/L, and $SO_4^=$ 15.3 to 22.5 mg/L. In-house QC sample 00.97686 is used to check NO_3-N and has a value of 1.78 to 2.18 mg/L. In-house QC sample 00.21218 is used to check Br^- and has a value of 18.3 to 22.3 mg/L.

7. Procedure

7.1. Initial setup of DIONEX 4000i.

7.1.1. Fill the reagent reservoir bottle No. 3 with the column eluant.

7.1.2. Fill the reservoir with the AMMS regenerant solution.

7.1.3. Install the AS4A column with AG4A guard in the basic chromatography module. Make sure all fittings are snug and leak-free.

7.1.4. Make sure the AMMS (anion micro membrane suppressor) is installed and lines are snug and leak-free.

7.1.5. Turn on the He gas, which has been regulated at the main tank to deliver 100 psi.

7.1.6. Turn on the He gas to the AMMS reservoir and pressurize the system with the regulator to 10 psi. The flow rate should be close to 5 mL/min at the effluent of the AMMS.

7.1.7. Turn on the He gas to the eluant degas module to degas the reagent eluants. Turn **PRESSURE** switch **ON** and pressurize to 20 psi. Turn **SAMPLE** switch **ON**. Turn **ELUANT NO. 3** to **ON**. Degas in low mode.

7.1.8. Turn the gradient pump module **(GPM)** and the conductivity detector module **(CDM)** to **LOCAL**. Turn the **PUMP** switch to **START**. The program for this setup should be 100% flow on position 3, at a flow rate of 2 mL/min. The **HIGH LIMIT** setting of the pump pressure should be **4000 psi** and the **LOW LIMIT** should be **0**. The normal operating pressure of the system is 1200 psi.

7.1.9. It may be necessary to prime the pump if it does not start. This will be indicated by a grinding noise in the pump or by low or erratic pump pressure. Shut off the pump if this occurs.

7.1.9.1. Prime the pump by inserting a 10-cc plastic syringe at the priming point and open the valve. Draw eluant solution into the syringe at the priming point, filling the syringe. Remove the syringe, invert, and tap to release trapped air bubbles.

7.1.9.2. Reinsert the syringe into the priming point. Open the pressure transducer valve. Turn on the pump. Inject the liquid in the syringe into the system until the syringe is nearly empty. Retighten the pressure transducer valve. Turn off the valve at the priming point.

7.1.9.3. The system should now be primed and the system pressure should stabilize. If it does not stabilize, it may be necessary to prime again until all air is removed from the eluant lines.

7.1.10. Let the system equilibrate under these conditions for 15-30 min until a steady baseline of approximately 10 microsiemens is reached on the conductivity meter.

7.2. Sample preparation.

7.2.1. All unknowns should be filtered through a 0.45-μm filter to remove solids that clog columns and lines.

7.2.2. When running unknown samples, start with dilute samples to prevent overloading of the separator columns. Begin with a 1:100 dilution on unknowns and adjust accordingly. Try to adjust sample peaks to be ± 50% of standard peaks.

7.2.3. Prepare spiked samples to determine the matrix effects on the analytes of concern. Use samples that are low in analytes to prevent overloading the columns. To a 100-mL volumetric flask, add the unknown sample aliquot plus the following aliquots of the 100 ppm spike solutions: 3 mL of Cl^-, 10 mL of NO_3^-, 15 mL of $SO_4^=$, 2 mL of F^-, and 10 mL of Br^-.

Volume of 100-ppm spike solution added to 100-mL flask		Resulting concentration of spike in flask
3 mL	Cl^-	3 mg/L
10 mL	NO_3^-	10 mg/L
15 mL	$SO_4^=$	15 mg/L
2 mL	F^-	2 mg/L
10 mL	Br^-	10 mg/L

7.3. Autosampler setup.

7.3.1. Load standards, QCs, samples, duplicates, and spikes into the 5-mL sample vials. Duplicates, QCs, and spikes should be run every tenth unknown sample.

7.3.2. Fill the tube with solution to the etched line or above. Use only filtered solutions for unknown samples. Insert the cap into the tube with the nipple end up. Press down on the cap with the special tool provided until the cap is flush with the vial. Shake off excess liquid.

7.3.3. Place the sample tube into the 6-position cassette. Load in order, with the first sample nearest the white dot on the cassette.

7.3.4. Load the sample cassettes into the autosampler with the white dot facing the sampling mechanism. The first sample loaded should always be the mixed standard solution, to calibrate the instrument.

7.3.5. The autosampler should be in local mode. Put **RUN-HOLD** in the **RUN** mode and press the **LOAD** button. The cartridge will advance and run through the cycle. Let run until the **STATUS** light shows **READY**. This process takes about 1 min.

7.3.6. Leave the autosampler in local mode. At this time the samples are loaded and ready to start an automated run under computer control.

7.4. Setup of the operating files for running the instrument.

7.4.1. Turn up the brightness and contrast on the CRT.

7.4.2. The first screen should be the **Program Manager**. Using the mouse, double-click on the **AI450 v3.2** block. The Main Menu Config. screen will appear.

7.4.3. Double-click on the **Method** block. The Method Editor screen will appear.

Click on the box called **file**. Move the cursor to **open** and click. Move the cursor to **anion.1 met** and double-click. You will be in the Method Editor screen.

Move the cursor and click on the **System** block. Under System Assignment, the first block reads **ACI SYS1:ANION1**. Click on **OK** to return to the Method Editor screen.

Go to the detectors used by this method and click on the **Detector 1** box. The highlighted box should read **CDM-1 Conductivity Det.** Click on the **OK** box and you will return to the Method Editor screen.

The block marked Plot Scale is a variable parameter. It is set at 30.0 μS and is best left at this setting.

The run time is variable but is normally set at 10.0 min. The sampling rate should be set at 5 Hz.

Under Instrument Control, double-click on the **gradient**. The Gradient Editor screen will appear. Click on the **file** portion and click on **open**. Move the cursor to **anion1.gpm** and double-click. The time box shows 0. These are the initial instrument settings. The flow setting should be 2 mL/min. The eluent setting should be 100% at position 3. V5 and V6 should be in the off position.

Click on the **advance arrow** of the time box. Three time settings will appear 0.0, 0.1, and 1.0 min. With the cursor, click on **0.1 min.** The flow should be 2.0 mL/min. Eluent should be 100% at position 3. V5 should be on and V6 should be off. Click on **1.0 min.** The flow should be 2.0 mL/min and eluent 100% at position three. V5 and V6 should both be off. Click on the **OK** box.

Move the cursor to the uppermost **left hand corner** box and click. Select the **close** box and click. Save current changes by answering **yes**. Click on the **OK** box to save the file. Select **OK** again and the screen will return to the Method Editor screen.

7.4.4. Click on the **timed events** box and the Timed Event screen will appear. Go to the file section and select **open**. Select the **anion1.te** file by double-clicking. This will show the Timed Events Editor screen. Under the file box select the **open** option. Double-click on the **anion1.te** option. Under the step time box, the initial conditions are 30μS. Under the ACI no functions are activated.

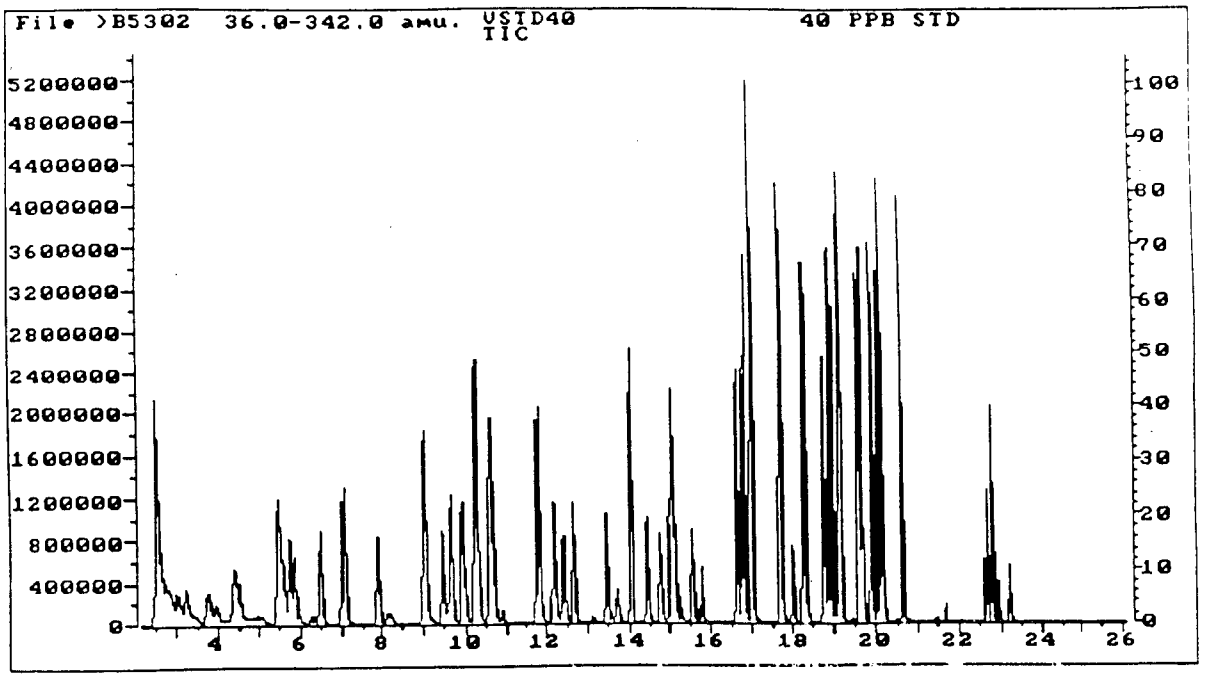

Fig. 1. Sample Chromatogram

VOLATILE ORGANIC COMPOUNDS IN WATER: PRECISION DYNATECH AUTOSAMPLER CAPILLARY COLUMN TECHNIQUE — GC/MS (EPA SW846 METHOD 8260)

Analyte: Volatile organic compounds	**Method No.:** EO730
Matrix: Water	**Procedure:** Purge/trap GC/MS, capillary column
Effective Date: 12/01/90	**Author:** Laura Kelly Matthew Monagle

SAFETY NOTE: Before beginning this procedure, read all of the Material Safety Data Sheets for the chemicals listed in Sec. 6. Read Sec. 4.3. of the EM-9 Safety Manual for information on personal protective clothing and equipment. Read Sec. 11 of this procedure and Source Materials 12.3 and 12.4 for proper waste disposal practices.

1. Principle of Method

1.1. Samples are loaded into the purge vessels supplied for use with the Precision Dynatech Autosampler. Volatile organic compounds are purged from the sample onto a sorbent material. These analytes are then desorbed into a gas chromatograph (GC). The column is temperature-programmed and analytes are separated and are detected with a mass spectrometer (MS).

1.2. Qualitative identification is performed by analyzing standards under the same conditions used for samples and comparing resultant mass spectra and GC retention times. Each identified component is quantified by relating the MS response for an appropriately selected ion produced by that compound to the MS response for another ion produced by an internal standard.

2. Analytes and Limit of Quantitation

Internal Standards	Surrogates
Pentafluorobenzene	1,2-Dichloroethane-d_4
1,4-difluorobenzene	Toluene-d_8
1,4-difluorobenzene-d_4	4-Bromofluorobenzene
Chlorobenzene-d_5	

2.1. Table I is a list of volatile organic compounds and their reporting limits of quantitation (LOQs). (Tables I-IV are found at the end of this procedure.)

2.2. The reporting limit of quanititation for the target VOCs is 5 μg/L except for the following compounds.

Compound	µg/L
Chloromethane	10.0
Vinyl chloride	10.0
Bromomethane	10.0
Chloroethane	10.0
Acetone	20.0
Acrolein	100.0
Acrylonitrile	100.0
2-Chloroethyl vinyl ether	100.0
Vinyl acetate	10.0
2-Butanone	20.0
4-Methyl-2-pentanone	20.0
2-Hexanone	20.0
1,2-Dibromo-3-chloropropane	10.0

Saturation of ions used for quantitation can occur at a concentration above 200 ng/mL. If saturation occurs, the sample must be diluted and reanalyzed.

2.3. Table II lists all the volatile organic compounds and their characteristic masses. The volatile internal standards with the corresponding analytes are listed in Table III. Fig. 1 is a chromatogram showing all volatile organic compounds, surrogates, and internal standards.

3. Interferences

3.1. Impurities in the purge gas and solvent vapors in the laboratory can contaminate samples. The analytical system must be demonstrated to be free from contamination under the condition of the analysis by running laboratory reagent blanks (i.e., method blanks). The use of non-TFE tubing, non-TFE thread sealants, or flow controllers with rubber components in the purging device must be avoided.

3.2. Samples can be contaminated by diffusion of volatile organics (particularly fluorocarbons and methylene chloride) through the septum seal into the sample during storage and handling. A trip blank, prepared from reagent water and carried through the holding period and the analysis protocol, serves as a check on such contamination. One trip blank per request group should be analyzed.

3.3. Contamination by carryover can occur whenever high-level and low-level samples are sequentially analyzed. Whenever an unusually concentrated sample is encountered, all following samples must be reanalyzed if carryover is suspected, or a method blank should follow until the contamination has been eliminated.

3.4. The volatile analysis laboratory should be completely free of solvents on the volatile target component list.

4. Collection and Storage of Samples

4.1. Water samples are collected in 40-mL screw-cap VOA vials with a Teflon-lined silicone septa. The vials and septa should be washed with soap and water, rinsed with distilled deionized water, placed in an oven, and dried at 70°C for approximately 1 h.

4.2. Water samples are gently introduced into the vial to reduce agitation, which might drive off volatile compounds, and to avoid the introduction of air bubbles within the vial. The vial must be filled until there is a meniscus over the lip of the vial. Four drops of concentrated HCl are carefully added to each sample vial as a preservative to extend holding times. The screw-top lid with the septum, Teflon side toward the sample, should be tightened onto the vial. After tightening the lid, the vial should be inverted and tapped to check for air bubbles. If any air bubbles are present another sample must be collected. Two VOA vials should be filled at each sample location.

4.3. All sampling vials must be refrigerated between 0 and 4°C.

4.4. The holding time for water samples preserved with concentrated HCl is 14 days from the date of collection. For unpreserved water samples, the holding time is 7 days from the date of collection.

5. Apparatus

5.1. Purge and trap configuration.

5.1.1. The Precision Dynatech Autosampler is designed for in-situ purging of both soils and water. The sample is loaded into glassware supplied with the autosampler. Internal standard and surrogates are added by the Precision Dynatech Autosampler and purging takes place in the glass vessel.

5.1.2. The trap must be at least 25 cm long and have an i.d. of at least 0.2667 cm. Starting from the inlet, the trap must contain the following amounts of absorbents: 1/3 2,6-diphenylene oxide polymer -60/80 mesh, chromatographic grade (Tenax GC or equivalent), 1/3 of silicia gel -35/60 mesh (Davison grade 15 or equivalent), and 1/3 coconut charcoal. Packed traps can be purchased through Supelco, Tekmar, or OI. If it is not necessary to analyze for dichlorodifluoromethane or other fluorocarbons of similar volatility, the charcoal can be eliminated and the polymer increased to fill 2/3 of the trap. Before initial use, the trap should be conditioned overnight at 180°C by backflushing with an inert gas flow of at least 20 mL/min. Before daily use the trap should be conditioned for 10 min at 180°C with backflushing. Traps normally last 2-3 months when used daily. Some signs of deteriorating traps are: uncharacteristic recoveries of surrogate, especially toluene-d_8, loss in

response of internal standards during a 12 h shift, or a rise in the baseline during the early portion of the scan. The trap should be replaced if any of these symptoms occur.

5.1.3. The desorber should be capable of rapidly heating (10°C/s) the trap to 180°C for desorption. The trap bakeout temperature should not exceed 220°C.

5.2. Gas chromatography/mass spectrometer/data system.

5.2.1. The GC must be temperature-programmable and should be equipped with adjustable differential flow controllers so that the column flow rate will be reproducible throughout desorption and temperature program operation. The GC is interfaced to the MS with a jet separator or is directly coupled.

5.2.2. Gas chromatographic column: 70-m x 0.53-mm-id DB624 (J & W) with 3-μm film thickness. The flow rate of helium carrier gas should be established at ~15 mL/min.

5.2.3. Mass spectrometer: Mass-spectral data are obtained with electron-impact ionization at a nominal electron energy of 70 eV. The mass spectrometer scans from 35 to 350 amu every 1 s or less and must produce a mass spectrum that meets all criteria in Step 7.1.1 when 50 ng of 4-bromofluorobenzene is introduced into the GC.

5.2.4. Data system: A computer system that allows the continuous acquisition and storage on machine-readable media of all mass spectra obtained throughout the duration of the chromatographic program must be interfaced to the mass spectrometer. The computer must have software that allows searching any GC/MS data file for ions of a specified mass and plotting such ion abundances versus time or scan number. This type of plot is defined as an extracted ion current profile (EICP). Software must also be available that allows integrating the abundances in any EICP between NIST and/or EPA mass-spectral libraries.

5.3. Microsyringes: 10-, 25-, 100-, and 500-μL, for injecting the appropriate standards into the reagent water.

5.4. Syringes: 5- or 25-mL, for measuring the required aliquot of reagent water.

5.5. Balance: analytical, capable of accurately weighing 0.001 g.

5.6. Micro reaction vessels: 2- or 3-mL with Teflon-lined miniert valves, for the storage of stock or secondary standard solutions.

5.7. Disposable Pasteur pipettes: used for transferring stock or secondary standard solutions from the volumetric flask to the micro reaction vessels.

6. Reagents/Standards

6.1. Methanol (CH_3OH). Pesticide quality or equivalent, demonstrated to be free of analytes. Must be stored apart from other solvents.

6.2. Reagent water. Must be purged with an inert gas for at least 30 min before use. Water must be free of interferents at the limit of quantitation (LOQ). Alternatively, HPLC grade water may be purchased. Purity of water used must be verified by GC/MS analysis.

6.3. Stock solutions. All instructions for preparation of stock solutions and dilutions are in the VOA standards preparation notebook located in Room 115, TA-59. See Table IV.

6.4. Instructions for storage of all standards, and expiration dates are found in the VOA standards preparation notebook. Expiration dates are to be strictly enforced.

6.5. Surrogate standards. The surrogates used are 1,2-dichloroethane-d_4, toluene-d_8, and 4-bromofluorobenzene.

6.6. Internal standards. The internal standards used are chlorobenzene-d_5, 1-4-difluorobenzene, 1,4-dichlorobenzene-d_4, and pentafluorobenzene.

6.7. 4-Bromofluorobenzene (BFB) standard. A standard solution containing 50 ng/μL of BFB in methanol used for verifying the tune of the MS.

6.8. Calibration standards. Secondary calibration standards at a minimum of 5 concentration levels are prepared from calibration stock standards. The solutions are prepared in 5- or 25-mL aliquots of reagent water. The five concentration levels are: 20, 50, 100, 150, and 200 ng/mL. A 5.0-mg/mL concentration level is optional.

6.9. Matrix spiking standards. Matrix spiking standard is prepared from volatile organic compounds which are representative of the compounds being investigated. The compounds used are 1,1-dichloroethene, benzene, trichloroethene, toluene, and chlorobenzene. A 10-μL aliquot of the matrix spike standard is used for 5-mL samples (50-μL aliquot for 25-mL aqueous samples).

7. Calibration

7.1. Initial calibration.

7.1.1. Each GC/MS system must be hardware-tuned to meet the criteria listed below for a direct injection or purging of 50 ng of 4-bromofluorobenzene. Analysis can not proceed until criteria are met.

Mass	Relative Abundance Criteria
50	15 to 40% of mass 95
75	30 to 60% of mass 95
95	base peak, 100% relative abundance
96	5 to 9% of mass 95
173	<2% of mass 174
174	>50% of mass 95
175	5 to 9% of mass 174
176	≥95% but ≤101% of mass 174
177	5 to 9% of mass 176

7.1.2. Recommended GC/MS operating conditions.

Electron energy:	70 V (nominal)
Mass range:	35-350 amu
Scan rate:	2 scan/s or less
Initial column temperature:	37°C
Initial column holding time:	4 min
Column temperature program:	4°C/min to 100°C, hold 1 min; 15°C min to 230°C
Final column temperature:	230°C
Final column holding time:	0 min
Column bake out temperature:	230°C
Column bake out holding time:	0 min
Carrier gas:	Helium at ~15 mL/min

7.1.3. A set of at least 5 calibration standards containing the method analytes is required. The calibration standard concentrations used are 20, 50, 100, 150, and 200 ng/mL. The calibration standard is prepared by adding the appropriate volume of the secondary standard mix to a 5-mL or 25-mL aliquot of reagent water.

AMOUNT OF WORKING CALIBRATION STANDARD AND VOC #6 STANDARD ADDED		
Std. conc.	5-mL aliquot	25-mL aliquot
	amount added (μL)	
20 μg/mL	4.0	20
50 μg/mL	10	50
100 μg/mL	20	100
150 μg/mL	30	150
200 μg/mL	40	200

7.1.4. The response factor, average response factor, and percent relative standard deviation for each compound will be calculated using the calibration program in the Hewlett Packard 1000 RTE system. A hard copy of the calibration report (produced by CBRPT) and copies of the quant reports with chromatograms are made and stored in association with the instrument.

7.1.5. Five system performance check compounds (SPCCs), are checked for a minimum average response factor (RF): chloromethane, 1,1-dichloroethane, bromoform, 1,1,2,2-tetrachloroethane, and chlorobenzene. The minimum acceptable average RF for these compounds should be 0.300 (0.250 for bromoform). These compounds typically have RFs of 0.4-0.6 and are used to check overall instrument performance and/or degradation caused by contaminated lines or active sites in the system.

7.1.5.1. Chloromethane. This compound is easily lost as a result of fast purge flow, or because the stock or working mixture of the calibration standard (VOC #6 mix only) is degrading. The purge gas (helium) flow rate should be 25-40 mL/min on the purge-and-trap device. Optimize the flow rate to provide the best response for chloromethane and bromoform.

7.1.5.2. Bromoform. This compound will most likely be purged very poorly if the purge flow is too slow. Cold spots and/or active sites in the transfer line may adversely affect response.

7.1.5.3. Tetrachloroethane and 1,1-dichloroethane. These compounds are degraded by contaminated transfer lines in purge-and-trap systems and/or active sites in trapping materials.

7.1.6. Continuing calibration check (CCC) compounds are used as a measure of the linearity of the analyte response factors. The percent relative standard deviation (%RSD) is checked for the CCCs. These compounds are 1,1-dichloroethene, chloroform, 1,2-dichloropropane, toluene, ethylbenzene, and vinyl chloride. The maximum %RSD for these compounds is 30%. The %RSD for all analytes should be <30%.

7.1.7. Once the initial calibration (containing the response factor, average response factor, and percent relative standard deviation for each analyte of the five different calibration standards) has been generated, the analyst can proceed with daily GC/MS calibration.

7.2. Continuing daily calibration.

7.2.1. Before samples are analyzed, inject or purge 50 ng of the 4-bromofluorobenzene (BFB) standard (1 μL of the 25-μg/mL 4-bromofluorobenzene solution). The resultant mass spectra for the BFB must meet all the criteria given in Step 7.1.1. This procedure must be performed every 12 h of analysis. The 12-h sequence begins at the time at which the BFB is injected into the GC/MS system.

7.2.2. The initial calibration curve for each compound must be checked and verified every 12 h before analyzing samples. This is accomplished by analyzing a 50-ng/mL continuing calibration standard and checking the SPCCs and CCCs.

7.2.3. The minimum response factor for the SPCCs is 0.300 (0.250 for bromoform). Some possible problems are standard mixture degradation, contamination at the front end of the analytical column, and active sites in the column or chromatographic system.

7.2.4. The CCCs are used to check the validity of the initial calibration by calculating the percent difference between the average response factor from the initial calibration and the response factor from the current verification check standard. If the percent difference for any compound is 20%, the laboratory should consider this a warning limit. If the percent difference for each CCC is <25%, the initial calibration is assumed to be valid. If this criterion is not met (> 25% difference) for any one CCC, corrective action must be taken. The percent difference for all analytes should be less than or equal to 25%. Corrective action can include, but is not limited to, reanalysis of the verification check standard, cutting a portion of the column, or using a new working calibration standard. If a source of the problem cannot be determined after corrective action has been taken, a new five-point calibration (initial calibration) must be generated. See Step 7.1. Both SPCC and CCC criteria **must** be met before quantitative sample analysis begins.

8. Procedure

8.1. BFB tuning criteria and continuing calibration criteria must be met before analysis of samples can begin.

8.2. Parameters.

O I Sample Concentrator	
Purge time:	8-10 min
Trap temperature:	~28°C (purging)
Trap temperature:	35°C (desorb preheat)
Desorb time:	2-4 min
Trap temperature:	205°C (desorb)
Trap bake time:	11-15 min
Trap temperature:	215°C (bakeout)
Transfer lines:	100°C
Valve temperature:	80°C
Purge flow:	25-40 mL/min
Purging temperature:	40°C

8.3. A sample batch typically consists of a BFB, continuing calibration, reagent water blank, and samples up to the 12-h limit on BFB tune. Samples are set up as described in the following sections.

8.4. Either a 5-mL or 25-mL sample aliquot can be used. A separate initial calibration is required for a 5-mL or 25-mL sample aliquot (an initial calibration for the 5-mL aliquot analysis and an initial calibration for the 25-mL aliquot analysis). Lower limits of quantitation can be achieved through a 25-mL aliquot analysis.

8.5. Remove the plunger from a 5-mL or 25-mL syringe. Open the sample vial, which has come to ambient temperature, and carefully pour the sample into the syringe barrel to just short of overflowing. (While pouring the sample into the syringe barrel, place a gloved finger over the opening of the syringe or attach a closed syringe valve to prevent the sample from leaking out). Replace the syringe plunger and compress the sample. If a syringe valve was used, open the valve and vent any residual air while adjusting the sample volume to 5.0 or 25 mL, which ever is appropriate. The process of taking an aliquot destroys the validity of the liquid sample for future analysis; therefore, if only one VOA vial is available for analysis, the analyst should fill a 25-mL VOA vial at this time to protect against possible loss of sample integrity. (When taking the aliquot, a syringe valve must be used in order to prevent air from leaking into the syringe. The syringe is stored in the refrigerator at -4°C for no longer than 24 h.) Measure the pH of an aliquot of the water to determine preservation status and record on the VOA benchsheet.

8.6. Place the contents of the syringe into a partially assembled Precision Dynatech Autosampler vial (with the bottom septa and cap attached), add a magnet, and cap the vial.

8.7 Place the sealed autosampler vial on the autosampler. The internal standard/purgeable surrogates are added automatically. Check the ISM syringe content before each sequence run (ISM/PSS). If the volume is low (less than 1 mL), refill according to the directions in the Precision Manual. The batch sequence can then be started.

8.8 The trapped materials are introduced to the GC column by rapidly heating the trap to 180°C while backflushing the trap with helium at 15 mL/min for 2 min.

8.9 To avoid contamination of the next sample, bake the trap at 180°C for 11 min. Return the trap to ambient temperature and analyze the next sample.

8.10 For each sample analyzed, including BFB and continuing calibrations, an entry must be made in the sample injection log associated with each instrument. This entry must be made within 24 h of data acquisition. This entry incudes factors such as date and time sample was run, internal standard value, and surrogate recoveries.

8.11 If the initial analysis of a sample has a concentration of analytes that exceeds the initial calibration range (higher than 200 ng/mL), the sample will need to be reanalyzed at a dilution (see Step 8.13). Secondary-ion quantitation is allowed only when there are sample interferences with the primary ion. When a sample is analyzed that has saturated ions from a compound, the analysis must be followed by a blank water analysis. Sample analysis may not resume until a blank can be analyzed and found free of interferences. If this occurs during an automated run, reanalyze all following samples if carryover from the saturated compound is suspected.

8.12 The following procedure is appropriate for diluting purgeable samples. Perform all steps without delays until the diluted sample is in a gas-tight syringe.

8.12.1. Prepare dilutions in a volumetric flask (10- to 100-mL). Select the appropriate volumetric flask that will allow the necessary dilution.

8.12.2. Calculate the approximate volume of water to be added to the volumetric flask and add slightly less than this quantity of water.

8.12.3. Inject the proper aliquot of sample from the syringe prepared in Step 8.5 into the flask. Dilute the sample to volume with reagent water. Cap the flask and gently invert three times. Resume analysis according to Step 8.5.

8.12.4. An example of a 50% sample dilution is as follows: add approximately 4 mL of reagent water to a 10-mL volumetric flask. Add 5 mL of the sample and dilute to volume with reagent water.

8.12.5. If one or more of the surrogate spiking compounds are not within the control limits and/or the internal standard areas are +100%/-50% of the continuing calibration in a sample, reanalyze that sample. See Step 9.2 for details.

9. Quality Control

9.1. A method blank consisting of reagent water is automatically spiked with ISM/PSS mix. A method blank is analyzed at the beginning of each instrumental batch (all samples of similar matrix analyzed together within the same 12-h period). The method blank must be free of any target volatile organic components at or above the limit of quantitation (LOQ) with the exception of acetone, methylene chloride, 2-butanone and toluene. These compounds can be detected in the method blank up to 5 times their LOQ. The surrogate recoveries should be within the control limits listed in Step 9.2. Analysis should not proceed until these requirements are met.

9.2. The following surrogates are spiked into each sample and analyzed as a measure of analyte recovery: 1,2-dichloroethane-d_4, toluene-d_8, and 4-bromofluorobenzene. If one or more of the surrogate spiking compounds are not within the control limits, those samples should be reanalyzed. If the reanalysis demonstrates similar results and the surrogate recoveries in the associated method blank are within the control limits, the out-of-control situation could be attributed to matrix effect and the results from the initial analysis should be reported. If the reanalysis of the sample has surrogate recoveries and/or internal standard areas within the control limits, the out-of-control condition could be due to analyst error or to a degrading surrogate spiking mix. In this case the results from the reanalysis should be reported.

SURROGATE RECOVERY CONTROL LIMITS

1,2-Dichloroethane-d_4	76-114%
Toluene-d_8	88-110%
4-Bromofluorobenzene	86-115%

9.3. A matrix spike, matrix spike duplicate, and matrix spike control are analyzed with every analytical batch and/or request group. One of the submitted samples is used as the matrix media. It is prepared as a normal sample and 10.0 μL of the matrix spike mix is added to the media prior to purging. A matrix spike control is analyzed by spiking 10.0 μL of matrix spike mix into 5 mL of reagent water. This matrix spike control sample is used in interpretation of matrix spike/matrix spike duplicate results and in distinguishing a genuine matrix effect from a bad stock solution. Matrix spike and matrix spike duplicate

samples also measure analyte recovery from a sample. A sample submitted by a customer will be used as the matrix media by adding 10 μL of the matrix spike mixture to a 5-mL sample aliquot to be purged.

9.4. "Blind" QC samples are received from the Quality Assurance section at a rate of 10% of the total samples analyzed. These samples are analyzed in exactly the same manner as submitted samples.

9.5. A duplicate of a submitted sample may be analyzed in order to measure precision of the environmental measurements. A duplicate is typically analyzed when a request group has >15 samples or when a request group does not have a sample used as a matrix spike and matrix spike duplicate.

9.6. Samples certified by the American Association for Laboratory Accreditation (A2LA) should be analyzed once per month.

9.7. Water pollution and drinking water samples, provided by the US Environmental Protection Agency for evaluation of laboratory performance, are each analyzed twice a year as part of the quality control program.

10. Data Interpretation

10.1. Qualitative analysis.

10.1.1. An analyte is identified by comparison of the sample mass spectrum with the mass spectrum of a standard of the compound from a standard (standard reference spectrum). The standard reference spectrum is obtained through analysis of a calibration standard. Two criteria must be satisfied to verify identification: (1) elution of the sample component at the same GC relative retention time (RRT) as that component in the daily standard; and (2) correspondence of the mass spectra of the sample component and the standard component.

10.1.1.1. The sample component RRT must agree within ±0.06 units of the RRT of the standard component in the daily calibration. If coelution of interfering components prohibits accurate assignment of the sample component RRT from the total ion chromatogram, the RRT should be assigned by using extracted ion current profiles (EIPCs) for ions unique to the component of interest.

10.1.1.2. All ions present in the standard mass spectrum at a relative intensity >10% of the primary ion must be present in the sample spectrum. The relative intensities of these ions must agree within ± 20% between the standard and sample spectra.

EXAMPLE: For an ion with an abundance of 50% in the standard spectra, the corresponding sample ion abundance must be between 30% and 70%.

10.1.2. For samples containing components not associated with the calibration standards (non-target volatile organic components), a library search may be made for the purpose of tentative identification. Ten organic compounds of greatest concentration which are not identified as part of the calibration standard may be identified. Non-target volatile organic components with a response of <10% of the nearest internal standard are not required to be searched. Comparison of sample spectra with the spectra from the library searches will assign a tentative identification.

10.1.2.1. Relative intensities of major ions in the reference spectrum (ions with intensities >10% of the most abundant ion) should be present in the sample spectrum.

10.1.2.2. The relative intensities of the major ions should agree within ±20%.

EXAMPLE: For an ion with an abundance of 50% in the standard spectrum, the corresponding sample ion abundance must be between 30 and 70%.

10.1.2.3. Molecular ions present in the reference spectrum should be present in the sample spectrum.

10.1.2.4. Ions present in the sample spectrum but not in the reference spectrum should be reviewed for possible background contamination or presence of coeluting compounds.

10.1.2.5. Ions present in the reference spectrum but not in the sample spectrum should be reviewed for possible subtraction from the sample spectrum because of background contamination or coeluting peaks.

If the compound does not meet the identification criteria listed above, the compound will be reported as unknown.

10.2. Quantitative analysis.

10.2.1. When a compound has been identified, the quantitation of that compound will be based on the integrated abundance from the EICP of the primary characteristic ion (see Table II). The compound will be quantitated using an internal standard technique. The internal standard used will be the one nearest the retention time of a given analyte.

10.2.1.2. The concentration of each identified analyte in the sample is calculated as follows:

$$\text{concentration (ng/mL)} = \frac{(Ax)\ (Is)}{(Ais)(RF)(Vo)},$$

where Ax = area of characteristic ion for compound being measured,
Is = amount of internal standard injected (ng),
Ais = area of characteristic ion for the internal standard,
RF = response factor for compound being measured, and
Vo = volume of water purged (mL), taking into consideration any dilutions made.

10.2.1.3. The HP 1000 RTE system will automatically calculate the concentration (ng/mL) of the analyte detected when a report is generated.

10.2.2. Where applicable, an estimate of concentration for non-target volatile organic components in the sample should be made. The areas Ax and Ais (defined in Step 10.2.1.2) should be from a total ion chromatogram and the RF for the compound should be assumed to be 1. The concentration obtained should be reported indicating (1) that the value is an estimate and (2) which internal standard was used to determine concentration. The nearest internal standard free of interferences is used.

10.2.3. Results are reported without method blank correction. Method blanks will be reported as discrete samples.

11. Proper Waste Disposal Practices

11.1. General waste management.

11.1.1. Each analyst within the section shall receive Waste Generator training from EM-8 within 90 days of date of hire.

11.1.2. Wherever possible, the generation of waste shall be minimized through reduction, reuse or recycling. Wherever possible, containers should be segregated to reflect the nature of the hazardous waste and the eventual waste disposal methods. For example, chlorinated solvent wastes should be segregated from flammable, nonchlorinated solvents and >50-ppm contaminated PCB waste should be segregated from <50-ppm PCB

contaminated waste. This is especially important in analysis areas where the waste generated is considered to be mixed waste.

11.1.3. Waste is categorized using a Waste Profile Form from EM-8. Upon completion of a Waste Profile Form, the waste is disposed of by completing a Waste Disposal Request Form from EM-7. Approximately 30 days is required for the disposal of waste after the completion of the listed forms.

11.2. Solid waste.

11.2.1. Solid hazardous waste, such as contaminated paper towels, pipettes, spent syringes, and glass vials, is accumulated in a covered plastic container lined with a plastic bag. The container is labeled with a hazardous waste label identifying the hazard, the type of material being stored (i.e., pipettes, paper towels, etc.), the accumulation start date, and the laboratory of origin.

11.2.2. The waste container is opened only for the time necessary to dispose of the waste.

11.3. Liquid waste.

11.3.1. Liquid wastes such as spent samples and spent solvents that are not reusable, are accumulated in glass or steel containers appropriate for the type of sample being stored. For example, caustic materials should be stored in glass containers whereas spent solvents that are not to be recycled should be stored in metal containers.

11.3.2. All containers storing hazardous liquid materials must be secondarily contained. The container is labeled with a hazardous waste label identifying the hazard, the type of material being stored, the accumulation start date, and the laboratory of origin.

11.3.3. The waste container is opened only for the time necessary to dispose of the waste.

11.4. Unused samples.

11.4.1. Unused environmental samples are returned to the Sample Management section for eventual disposal.

12. Source Materials

12.1. "Test Methods for Evaluating Solid Waste, Physical/Chemical Methods," Laboratory Manual Vol. 1B, Method 8260, report no. SW-846 (November 1986).

12.2. "Statement of Work for Organics Analysis," USEPA Contract Laboratory Program (October 1986).

12.3. "Hazardous and Mixed Waste," Administrative Requirement 10-3, in *Environment, Safety, and Health Manual*, Los Alamos National Laboratory Manual, Chapter 1 (most recent edition).

12.4 "Low-Level Radioactive Solid Waste," Administrative Requirement 10-2, in *Environment, Safety, and Health Manual*, Los Alamos National Laboratory Manual, Chapter 1 (most recent edition).

TABLE I. VOLATILE ORGANIC COMPOUNDS

Analyte	CAS No.	LOQ µg/L
Chloromethane	74-87-3	10
Vinyl chloride	75-01-4	10
Bromomethane	74-83-9	10
Chloroethane	75-00-3	10
Acetone	67-64-1	20
Acrolein	107-02-8	100
Acrylonitrile	107-13-1	100
2-Chloroethyl vinyl ether	110-75-8	100
Dichlorodifluoromethane	75-71-8	10
Iodomethane	74-88-4	5.0
Trichlorotrifluoroethane	76-13-1	5.0
Trichlorofluoromethane	75-69-4	5.0
Methylene Chloride	75-09-2	5.0
1,1-Dichloroethene	75-35-4	5.0
Carbon Disulfide	75-15-0	5.0
trans-1,2-dichloroethene	156-60-5	5.0
1,1-Dichloroethane	75-34-3	5.0
cis-1,2-Dichloroethene	156-59-2	5.0
Bromochloromethane	74-97-5	5.0
Chloroform	67-66-3	5.0
1,2-Dichloroethane	107-06-2	5.0
1,1-Dichloropropane	563-58-6	5.0
Vinyl acetate	108-05-4	10
2-Butanone	78-93-3	20
2,2-Dichloropropane	594-20-7	5.0
1,1,1-Trichloroethane	71-55-6	5.0
Carbon tetrachloride	56-23-5	5.0
Benzene	71-43-2	5.0

TABLE I. (cont)

Analyte	CAS No.	LOQ µg/L
1,2-Dichloropropane	78-87-5	5.0
Trichloroethene	79-01-6	5.0
Dibromomethane	74-95-3	5.0
Bromodichloromethane	75-27-4	5.0
trans-1,3-Dichloropropene	1006-10-26	5.0
cis-1,3-Dichloropropene	1006-10-15	5.0
1,1,2-Trichloroethane	79-00-5	5.0
1,3-Dichloropropane	142-28-9	5.0
Chlorodibromomethane	124-48-1	5.0
Bromoform	75-25-2	5.0
4-Methyl-2-pentanone	10-81-01	20
Toluene	108-88-3	5.0
2-Hexanone	59-17-86	20
1,2-Dibromoethane	106-93-4	5.0
Tetrachloroethene	127-18-4	5.0
Chlorobenzene	108-90-7	5.0
1,1,1,2-Tetrachloroethane	630-20-6	5.0
Ethylbenzene	100-41-4	5.0
o,m,p-Xylene (mixed)	133-020-7	5.0
Styrene	100-42-5	5.0
Bromoform	75-25-2	5.0
1,1,2,2-Tetrachloroethane	79-34-5	5.0
1,2,3-Trichloropropane	96-18-4	5.0
Isopropylbenzene	98-82-8	5.0
Bromobenzene	108-86-1	5.0
n-Propylbenzene	103-65-1	5.0
2-Chlorotoluene	95-49-8	5.0
4-Chlorotoluene	106-43-4	5.0

TABLE I. (cont)

Analyte	Cas No.	LOQ µg/L
1,3,5-Trimethylbenzene	108-67-8	5.0
tert-Butylbenzene	98-06-6	5.0
1,2,4-Trimethylbenzene	95-63-6	5.0
sec-Butylbenzene	135-98-8	5.0
1,3-Dichlorobenzene	541-73-1	5.0
1,4-Dichlorobenzene	106-46-7	5.0
p-Isopropyltoluene	99-87-6	5.0
1,2-Dichlorobenzene	95-50-1	5.0
n-Butylbenzene	104-51-8	5.0
1,2-Dibromo-3-chloropropane	96-12-8	10

TABLE II. CHARACTERISTIC MASSES (M/Z) FOR PURGEABLE ORGANIC COMPOUNDS

Analyte	Primary characteristic ion	Secondary characteristic ion(s)
Acetone	43	58
Actylonitrile	53	52
Acrolein	57	56,55
Benzene	78	-
Bromobenzene	156	77,158
Bromochloromethane	128	49,130,51
Bromodichloromethane	83	85,127
Bromoform	173	171,175,254,250,252,256
Bromomethane	94	96
2-Butanone	43	72,57
n-Butylbenzene	91	92,134
sec-Butylbenzene	105	134
tert-Butylbenzene	119	91,134
Carbon tetrachloride	117	119,121
Chlorobenzene	112	77,114
Chloroethane	64	66
Chloroethyl vinyl ether	63	65,106
Chloroform	83	85
Chloromethane	50	52
2-Chlorotoluene	91	126
4-Chlorotoluene	91	126
1,2-Dibromo-3-chloropropane	75	155,157
Dibromochloromethane	129	127,206,208
1,2-Dibromoethane	107	109,188
Dibromoethane	93	95,174
1,2-Dichlorobenzene	146	111,148
1,3-Dichlorobenzene	146	111,148
1,4-Dichlorobenzene	146	111,148
Dichlorodifluoromethane	85	87
1,1-Dichloroethane	63	65,83,85,98,100
1,2-Dichloroethane	62	98,64,100
1,1-Dichloroethene	96	61,63,98
cis-1,2-Dichloroethene	96	61,98
trans-1,2-Dichloroethene	96	61,98
1,2-Dichloropropane	63	112,65,114

TABLE II. (cont)

Analyte	Primary characteristic ion	Secondary characteristic ion(s)
1,3-Dichloropropane	76	78
2,2-Dichloropropane	77	97
1,1-Dichloropropene	75	110,77
cis-1-3-Dichloropropene	75	77,39
trans-1,3-Dichloropropene	75	77,39
Ethylbenzene	91	106
2-Hexanone	43	58,85,100,57
Isopropylbenzene	105	120
p-Isopropyltoluene	119	134,91
Methylene chloride	84	86,49,51
4-Methyl-2-penatone	43	58,85,100
n-Propylbenzene	91	120
Styrene	104	78,103
1,1,1,2-Tetrachloroethane	131	133,119
1,1,2,2-Tetrachloroethane	83	131,85,133,166
Tetrachloroethene	166	168,129,131,164
Toluene	92	91
1,1,1-Trichloroethane	97	99,61,117,119
1,1,2-Trichloroethane	83	97,85,99,132,134
Trichloroethene	95	130,132,97
Trichlorofluoromethane	101	103
1,2,3-Trichloropropane	75	77
1,2,4-Trimethylbenzene	105	120
1,3,5-Trimethylbenzene	105	120
Vinyl chloride	62	64
o-Xylene	106	91
m,p-Xylene	106	91
INTERNAL STANDARDS/SURROGATES		
Pentafluorobenzene	168	
1,4-Difluorobenzene	114	63,88
Chlorobenzene-d_5	117	82,119
1,4-Dichlorobenzene	152	
4-Bromofluorobenzene	95	174,176
Toluene-d_8	98	70,100
1,2-Dichloroethane-d_4	65	102

TABLE III. VOLATILE INTERNAL STANDARDS WITH CORRESPONDING ANALYTES ASSIGNED FOR QUANTITATION

Pentafluorobenzene

Acetone
Acrolein
Acrylonitrile
Benzene
Bromochloromethane
Bromomethane
2-Butanone
Carbon disulfide
Carbon tetrachloride
Chloroethane
Chloroform
Chloromethane
Dichlorodifluoromethane
1,2-Dichloroethane
1,1-Dichloroethane
1,1-Dichloroethene
1,2-Dichloroethane-d_4 [a]
cis-1,2-Dichloroethene
trans-1,2-Dichloroethene
2,2-Dichloropropane
1,1-Dichloropropene
Iodomethane
Methylene chloride
1,1,1-Trichloroethane
Trichlorofluoromethane
Trichlorotrifluorethane
Vinyl acetate
Vinyl chloride

1,4-Difluorobenzene

Bromodichloromethane
2-Chloroethyl vinyl ether
1,2-Dibromoethane
Dibromomethane
trans-1,3-Dichloropropene
Toluene-d_8 [a]
Trichloroethene

Chlorobenzene

Bromoform
Chlorodibromomethane
Chlorobenzene
1,2-Dibromoethane
1,3-Dichloropropane
cis-1,3-Dichloropropene
Ethylbenzene
2-Hexanone
4-Methyl-2-pentanone
Styrene
Toluene
1,1,2-Trichloroethane
1,1,1,2-Tetrachloroethane
o,m,p-Xylenes

1,4-Dichlorobenzene-d_4

Bromobenzene
n-Butylbenzene
sec-Butylbenzene
tert-Butylbenzene
2-Chlorotoluene
4-Chlorotoluene
1,2-Dibromo-3-chloropropane
1,2-Dichlorobenzene
1,3-Dichlorobenzene

TABLE III. (cont)

1,4-Dichlorobenzene-d_4 (cont)

1,4-Dichlorobenzene
n-Propylbenzene
1,1,2,2-Tetrachloroethane
1,2,3-Trichloropropane
1,2,4-Trimethylbenzene
1,3,5-Trimethylbenzene
4-Bromofluorobenzene [a]

[a] Surrogate

TABLE IV. STOCK AND WORKING CALIBRATION SOLUTIONS

Chemical name/concentration	Final concentration Stock (μg/mL)	Working std. (μg/mL)
INTERNAL STANDARD MIX		
Pentafluorobenzene (1000 μg/mL)	50	25
Chlorobenzene-d_5 (1000 μg/mL)	50	25
1,4-Difluorobenzene (1000 μg/mL)	50	25
1,4-Dichlorobenzene-d4 (1000 μg/mL)	50	25
CALIBRATION STANDARD MIX		
HSL Custom standard		
Acetone (1000 μg/mL)	100	25
Methyl ethyl ketone (1000 μg/mL)	100	25
Carbon disulfide (1000 μg/mL)	100	25
4-Methyl-2-Pentanone (1000 μg/mL)	100	25
Vinyl acetate (1000 μg/mL)	100	25
2-Chloroethyl vinyl ether (1000 μg/mL)	100	25
2-Hexanone (1000 μg/mL)	100	25
Acrolein (1000 μg/mL)	100	25
Acrylonitrile (1000 μg/mL)	100	25
Iodomethane (1000 μg/mL)	100	25
Freon 113 (1000 μg/mL)	100	25
Purgeable Surrogate Standard Mix - CLP		
Bromofluorobenzene (250 μg/mL)	50	25
1,2-Dichloroethane-d_4 (250 μg/mL)	50	25
Toluene-d_8 (250 μg/mL)	50	25

TABLE IV. (cont)

Chemical name/concentration	Final concentration Stock (μg/mL)	Working std. (μg/mL)
Volatile Organic Compounds Mix #1		
sec-Butylbenzene (2000 μg/mL)	100	25
tert-Butylbenzene (2000 μg/mL)	100	25
Chlorobenzene (2000 μg/mL)	100	25
2-Chlorotoluene (2000 μg/mL)	100	25
4-Chlorotoluene (2000 μg/mL)	100	25
1,2-Dichlorobenzene (2000 μg/mL)	100	25
1,3-Dichlorobenzene (2000 μg/mL)	100	25
1,4-Dichlorobenzene (2000 μg/mL)	100	25
Isopropylbenzene (2000 μg/mL)	100	25
n-Propylbenzene (2000 μg/mL)	100	25
o-Xylene (2000 μg/mL)	100	25
p-Xylene (2000 μg/mL)	100	25
Volatile Organic Compounds Mix #2		
Benzene (2000 μg/mL)	100	25
Bromobenzene (2000 μg/mL)	100	25
n-Butylbenzene (2000 μg/mL)	100	25
Ethylbenzene (2000 μg/mL)	100	25
p-Isopropyltoluene (2000 μg/mL)	100	25
Naphthalene (2000 μg/mL)	100	25
Styrene (2000 μg/mL)	100	25
Toluene (2000 μg/mL)	100	25
1,2,3-Trichlorobenzene (2000 μg/mL)	100	25
1,2,4-Trichlorobenzene (2000 μg/mL)	100	25

TABLE IV. (cont)

Chemical name/concentration	Final concentration Stock (μg/mL)	Working std. (μg/mL)
Volatile Organic Compounds Mix #2 (cont)		
1,2,4-Trimethylbenzene (2000 μg/mL)	100	25
1,3,5-Trimethylbenzene (2000 μg/mL)	100	25
m-Xylene (2000 μg/mL)	100	25
Volatile Organic Compounds Mix #3		
1,2-Dibromo-3-chloropropane (2000 μg/mL)	100	25
1,2-Dibromoethane (2000 μg/mL)	100	25
1,2-Dichloroethane (2000 μg/mL)	100	25
1,2-Dichloropropane (2000 μg/mL)	100	25
1,3-Dichloropropane (2000 μg/mL)	100	25
1,1-Dichloropropene (2000 μg/mL)	100	25
1,3-Dichloropropene (4000 μg/mL) *	400	50
Hexachlorobutadiene (2000 μg/mL)	100	25
1,1,1,2-Tetrachloroethane (2000 μg/mL)	100	25
1,1,2,2-Tetrachloroethane (2000 μg/mL)	100	25
1,1,2-Trichloroethane (2000 μg/mL)	100	25
Trichloroethene (2000 μg/mL)	100	25
1,2,3-Trichloropropane (2000 μg/mL)	100	25

* Mixture of cis-1,3-dichloropropene and trans-1,3-dichloropropene, 2000 μg/mL each.

Volatile Organic Compounds Mix #4		
Bromochloromethane (2000 μg/mL)	100	25
Bromoform (2000 μg/mL)	100	25
Carbon tetrachlororide (2000 μg/mL)	100	25
Chloroform (2000 μg/mL)	100	25

TABLE IV. (cont)

Chemical name/concentration	Final concentration Stock (μg/mL)	Working std. (μg/mL)
Volatile Organic Compounds #4 (cont)		
Dibromomethane (2000 μg/mL)	100	25
1,1-Dichloroethane (2000 μg/mL)	100	25
2,2-Dichloropropane (2000 μg/mL)	100	25
Tetrachloroethene (2000 μg/mL)	100	25
1,1,1-Trichloroethane (2000 μg/mL)	100	25
Volatile Organic Compounds Mix #5		
Bromodichloromethane (2000 μg/mL)	100	25
Dibromochloromethane (2000 μg/mL)	100	25
1,1-Dichloroethene (2000 μg/mL)	100	25
cis-1,2-Dichloroethene (2000 μg/mL)	100	25
trans-1,2-Dichloroethene (2000 μg/mL)	100	25
Methylene chloride (2000 μg/mL)	100	25
VOC #6 CALIBRATION STANDARD MIX		
Volatile Organic Compounds Mix #6		
Bromomethane (2000 μg/mL)	100	25
Chloromethane (2000 μg/mL)	100	25
Chloroethane (2000 μg/mL)	100	25
Dichlorodifluoromethane (2000 μg/mL)	100	25
Trichlorofluoromethane (2000 μg/mL)	100	25
Vinyl chloride (2000 μg/mL)	100	25

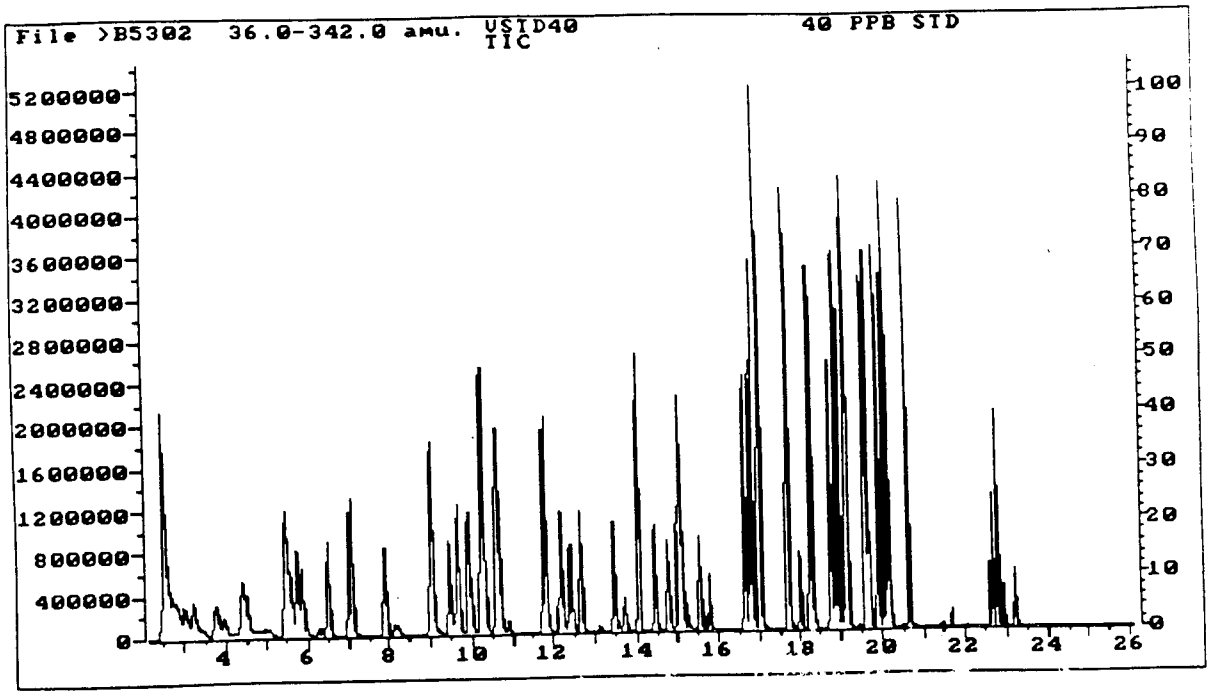

Fig. 1. Sample Chromatogram

GROSS ALPHA AND BETA ACTIVITY IN ENVIRONMENTAL MATRICES — GAS-FLOW PROPORTIONAL COUNTING

Analyte: Alpha- and beta-emitting nuclides	**Method No.:** ER100
Matrix: Soil, water, and air particulates	**Minimum Detectable Activity:** Soil, water ~1.2 pCi (alpha, beta) Filters 0.3 pCi (alpha) Filters 0.6 pCi (beta)
Procedure: Gas-flow proportional counting	**Accuracy and Precision:** Filters 94% ± 5% Water 105% ± 11%
Effective Date: 01/01/75	**Authors:** Richard J. Peters George H. Brooks

SAFETY NOTE: Before beginning this procedure, read all of the Material Safety Data Sheets for the chemicals listed in Sec. 7. Read Sec. 4.3 of the EM-9 Safety Manual for information on personal protective clothing and equipment.

1. Principle of Method

1.1. Samples are mounted on stainless steel planchets following leaching of soil samples and evaporation of water samples.

1.2. Samples are counted for 100 min on a low-background, gas-flow proportional counter.

2. Sensitivity

2.1. Sensitivity will vary greatly for alpha activity and to a lesser degree for beta activity due to self-absorption by the residual sample mass.

2.2. The minimum detection limit for both alpha and beta is approximately 3 pCi total activity for a representative soil or water having 0.1 g of residue.

2.3. For a representative air filter, the minimum detection limit is 0.5 pCi total alpha activity and 1 pCi total beta activity.

3. Accuracy and Precision

3.1. The efficiency and crosstalk between alpha and beta counts in a gas-flow proportional counter may vary greatly depending on the energy of the alpha or beta emitter. Plutonium-239 and $^{90}Sr/^{90}Y$ are used as the basis for all crosstalk and relative efficiency determinations. The accuracy of a given measurement will depend on the actual energies of the unknown nuclides.

3.2. The following accuracy and precision measurements were made in 1988 on air filter and water proficiency samples provided by the Environmental Monitoring Systems Laboratory-Las Vegas quality assurance program.

	Filter Samples	Water Samples
alpha	93% ± 6%	107% ± 13%
beta	94% ± 4%	103% ± 10%

4. Interferences

4.1. The crosstalk correction method may not adequately protect from incorrect identification of radiation from samples containing very low-energy alpha or high-energy beta activities.

4.2. Moderate to high levels of gamma radiation can be misinterpreted as alpha or beta activity by gas-flow proportional counters.

4.3. The addition of a thin mylar sheet covering the planchet results in increased self-absorption in samples containing low-energy alpha and beta activities and may result in an underestimation of the actual concentrations.

5. Collection and Storage of Samples

5.1. There are no special collection and storage requirements.

6. Apparatus

6.1. Low-background alpha/beta proportional counter: equipped with a 2.25-in. ultrathin counting window (80 $\mu g/cm^2$) and a 50-sample automatic changing capability. Tennelec Model No. LB-5100, Tennelec Inc., Oak Ridge, Tennessee.

6.2. P-10 (argon/methane) gas cylinder.

6.3. Planchets: stainless steel, 2.0- by 0.25-in., Atomic Products Corp., Center Moriches, NY.

6.4. Mylar sheet: 0.00025-in. thick.

6.5. Beakers: 50-, 600-, and 1000-mL, pyrex.

6.6. Tubes: 40- and 50-mL, centrifuge.

6.7. Heat lamp.

7. Reagents

7.1. Nitric acid (concentrated, reagent-grade).

7.2. Hydrofluoric acid (concentrated, reagent-grade).

7.3. Hydrochloric acid (concentrated, reagent-grade).

7.4. Hydrogen peroxide (30%, reagent-grade).

7.5. Nitric acid (7.2 M). Dilute 460 mL of concentrated HNO_3 to 1000 mL with distilled water.

8. Calibration and Standards

8.1. Generate detector efficiencies for the determination of alpha and beta activities from curves that plot the absolute detector efficiency as a function of the sample mass residue.

8.1.1. Use National Institute of Standards and Technology (NIST) standards 5516 and 4919-D.

8.1.2. Prepare a group of 10 standards with the same amount of spike and vary the amount of residue (0.05 - 1.50 g) to generate the curve.

8.1.3. Plot efficiency as a function of the sample mass residue.

8.1.4. Derive an equation to describe the curves for both alpha and beta energies. Efficiencies can then be interpolated from these curves for a sample of any mass.

8.2. Count plated ^{239}Pu and $^{90}Sr/^{90}Y$ standards for 10 min with each set of samples. Use the data to determine two factors for gas-flow proportional counting: 1) the alpha/beta and beta/alpha crosstalk and 2) the system's relative performance based on the derived efficiencies.

8.3. Count two mylar-covered empty planchets along with the sample set for 100 min to determine alpha and beta backgrounds.

9. Procedure

9.1. Air filters.

9.1.1. Directly mount air filters, without chemical processing, face up on planchets.

9.2. Soils.

9.2.1. Place 2 g of dried soil into a 50-mL beaker.

9.2.2. Add 10 mL of concentrated HNO_3 and 5-10 drops of concentrated HCl to the beaker. Swirl carefully and allow to leach overnight at room temperature.

9.2.3. Heat the sample until the yellow-orange NO_2 fumes no longer appear.

9.2.4. Transfer the sample to a 40-mL glass centrifuge tube. Rinse the beaker with 5 to 10 mL of 7.2 M HNO_3 and add the rinse to the centrifuge tube. Centrifuge for 5 min.

9.2.5. Write the sample number on the bottom of a planchet and weigh to the nearest mg. Record the sample number and planchet weight in a Laboratory notebook.

9.2.6. Carefully decant the acid mixture from the centrifuge tube to the preweighed planchet.

9.2.7. Rinse the centrifuge tube with approximately 5 mL of 7.2 M HNO_3 and decant the wash to the planchet.

9.2.8. Evaporate the solution on the planchet to dryness under a heat lamp. Control the heating rate so that the sample does not spatter.

9.2.9. Allow the planchet to cool, reweigh, and record the weight.

9.2.10. Cover the sample tightly with mylar film.

9.3. Sewage or sludge.

9.3.1. Weigh a 600-mL glass beaker and record the weight in a Laboratory notebook.

9.3.2. Pour approximately 100 mL of sample into the beaker, reweigh, and record the weight.

Wet weight = (beaker + sample) - beaker

9.3.3. Evaporate the sample to dryness. Reweigh and record the weight.

Dry weight = (beaker + sample) - beaker

9.3.4. Heat the sample on a hot plate and treat with concentrated HNO_3 and H_2O_2 until all organic material has been oxidized.

NOTE: The sample will not have a black tarry consistency, but may still have a grayish or reddish appearance.

9.3.5. Add approximately 20 mL of concentrated HNO_3 and 10 mL of HCl and boil until all HCl has been driven off (the NO_2 fumes will no longer appear).

9.3.6. Continue to heat until approximately 3 mL of solution remains.

9.3.7. Add 10-15 mL of 7.2 M HNO_3 to the sample.

9.3.8. Pour the sample into a 50-mL glass centrifuge tube. Rinse the beaker with 3-5 mL of 7.2 M HNO_3 and add the rinse to the centrifuge tube. Centrifuge for 5 min.

9.3.9. Proceed with Steps 9.2.5 through 9.2.10.

9.4. Water.

9.4.1. Place 900 mL of water and 5 mL of concentrated HNO_3 into a 1-L glass beaker. Evaporate the solution to dryness overnight on a hot plate, medium setting.

9.4.2. Dissolve the residue in approximately 10 mL of concentrated HNO_3. Wash down the sides of the beaker with HNO_3 and 6 drops of HF.

CAUTION: HF is extremely corrosive.

The amount of HNO_3 used is not as critical, but the sides of the beaker must be washed down thoroughly.

9.4.3. Boil the sample to dryness to volatilize any silica.

9.4.4. Dissolve the residue in approximately 10 mL of concentrated HNO_3 and treat the solution with 30% H_2O_2 until all organic material is destroyed

and the sample residue is white or pale yellow and dry. Carefully add H_2O_2 to avoid sample spatter. Usually 1-2 mL of H_2O_2 are required.

9.4.5. Add 10-15 mL of concentrated HNO_3 and 5-10 mL of HCl to the sample. Heat until the evolution of NO_2 ceases and the sample is clear or pale yellow. Continue heating until 2-3 mL remain.

NOTE: Do not let the sample go to dryness.

9.4.6. Dissolve the residue in approximately 10 mL of 7.2 M HNO_3, washing down the sides of the beaker.

9.4.7. Proceed with Steps 9.2.5 through 9.2.10.

9.5. Loading the proportional counter.

9.5.1. Place the plated standards above program indicator A in the sample holding rack.

9.5.2. Place the quality assurance samples above program indicator B, along with the two blank planchets.

9.5.3. Place the samples into planchet holders and record their position on the alpha-beta sample sheet (Fig. 1), using program indicator C for the sample set.

9.5.4. Place the aluminum block on top of the sample stack.

10. Operation of Instrument

10.1. Turn the key switch on the front panel of the LB-5100 proportional counter from **RUN** to **INITIALIZE**, then back to **RUN**. This initializes the microprocessor and queries the operator for the proper information concerning the sample set.

10.2. Check that detector gas flow is 0.15 square cubic feet per hour (SCFH) and that the high voltage is turned to the proper setting (1323 V).

NOTE: Flows higher than 0.25 SCFH can damage the counter.

10.3. Answer the questions pertinent to the sample set (Fig. 2) and the counter will automatically begin the counting sequence. Consult the count room manager if problems arise.

10.4. Refer to the operating manual (Source Material 12.1) for further information on instrument use.

10.5. When data collection is complete, staple all hard copy output (Fig. 3) to the alpha-beta sample sheet for use in data reduction.

11. Calculations

11.1. Use the following formulas to determine detector efficiencies for soil and water (these equation lines were generated from the absolute efficiency versus sample mass residue curves):

for residual mass (M) < 0.2, use

$$Ea = 0.085 \times e^{-4.9 \times M}$$
$$Eb = 0.36 \times e^{-1.5 \times M} \quad ;$$

for residual mass (M) > 0.2, use

$$Ea = (0.08 \times e^{-5.0 \times M}) + 0.01$$
$$Eb = (-0.0695 \times M) + 0.268 \quad ;$$

where Ea = alpha efficiency,
Eb = beta efficiency, and
M = residual mass (g).

11.2. Use the following efficiency factors for air filter samples.

Ea = 0.25
Eb = 0.44

Since sample mass residue is assumed to be constant, the efficiency values shown are a result of standard efficiency calculations (cpm/dpm) using a NIST standard.

11.3. Alpha activities are calculated using the following equation:

$$Aia = \frac{Ac - Ab - Ax}{Ea \times Q \times 2.22} \quad ,$$

where Aia = alpha activity (pCi),
Ac = alpha activity from the LB-5100 output (cpm),
Ab = alpha background (cpm),
Ax = crosstalk (see below for calculation),

Ea = alpha efficiency,
Q = sample quantity (g or L), and
2.22 = factor to convert dpm to pCi.

Ax is derived using the following equation:

$$Ax = Xba \times \left(\frac{Bt}{T} - Bb\right) ,$$

where Ax = crosstalk,
Xba = beta to alpha crosstalk,
Bt = total beta counts,
T = time of count (min), and
Bb = beta background (cpm).

11.4. Beta activities are calculated using the following equation:

$$Aib = \frac{(Bc - Bb - Bx)}{Eb \times Q \times 2.22} ,$$

where Aib = beta activity (pCi),
Bc = beta activity from the LB-5100 output (cpm),
Bb = beta background (cpm),
Bx = crosstalk (see below for calculation),
Eb = beta efficiency,
Q = sample quantity (g or L), and
2.22 = factor to convert dpm to pCi.

Bx is derived using the following equation:

$$Bx = Xba \times \left(\frac{At}{T} - Ab\right) ,$$

where Bx = crosstalk,
Xba = alpha to beta crosstalk,
At = total alpha counts,
T = time of count (min), and
Ab = alpha background (cpm).

11.5. Uncertainties are generated using the following formula:

$$Sax = |Aia| \sqrt{((T_1/T_2) + T_3)\ (T_3 + SQUAN)\ (SQUAN)}\ ,$$

where Sax = standard deviation of the alpha activity,
Aia = alpha activity (pCi),
T1 = (Ac + Ab + Ax) T (where Ac, Ab, Ax, and T are defined as in Step 11.3).
T2 = Ac - Ab - Ax (where Ac, Ab, and Ax are defined as in Step 11.3).
T3 = Ast/Ea (where Ast equals the standard deviation of Ea, the alpha efficiency), and
SQUAN = standard deviation of the sample quantity.

For the calculation of beta uncertainties, replace alpha factors with beta factors in the above expression.

12. Source Materials

12.1. Instruction Manual for LB-5100, Rev. 4.2, Tennelec, Inc., Oak Ridge, Tennessee (1978).

12.2. Environmental Protection Agency, "Tentative Reference Method for the Measurement of Gross Alpha and Gross Beta Radioactivities in Environmental Waters," Quality Assurance Branch, Technical Support Laboratory, National Environmental Research Center, Las Vegas, Nevada, ROAP Number 22 ACW, EPA-680/4-75-005 (1975).

12.3. *EML Procedures Manual*, 26th ed., H. L. Volchok and G. de Planque, Eds. (Environmental Measurements Laboratory, US Department of Energy, New York, New York, HASL-300, 1986).

Revision or additions to the procedure are marked (▒▒▒▒). Where a section heading is marked, the entire section has been revised.

ALPHA-BETA COUNTING SEQUENCE

COUNT STARTED: _____ SAMPLE TYPE: _____ COUNT LENGTH (min): _____

SAMP. NO.	REQUEST NUMBER	OWN	VOL/MASS QUANT.	UNITS
1				
2				
3				
4				
5				
6				
7				
8				
9				
10				
11				
12				
13				
14				
15				
16				
17				
18				
19				

SAMP. NO.	REQUEST NUMBER	OWN	VOL/MASS QUANT.	UNITS
20				
21				
22				
23				
24				
25				
26				
27				
28				
29				
30				
31				
32				
33				
34				
35				
36				
37				
38				

Fig. 1. Alpha-beta sample sheet.

TENNELEC LB5100 REV. 4.0 - POWER ON
MODE
1-SINGLE SAMPLE
2-SINGLE CYCLE
3-SINGLE CYCLE AND RESTACK
4-MULTI-CYCLE
WHICH MODE DO YOU WANT (1,2,3,4)? 3 (3 = Single Cycle and Restack).

DO YOU WANT TO AVERAGE (Y/N)? N (Y will average 2 or more counts).

GROUP A (Group "A" is first group in initialization).

PLEASE ENTER SAMPLE ID (UP TO
12 CHARACTERS) AIR SAMPLE

ENTER TIME PS(XXXXX.XX MIN) 100	Requests Time Preset in hundreths of min. User enters a Time Preset of 1.00 min (max = 99,999.9).
ENTER A PS (CNTS) 999999	Requests Channel A Preset in Counts. User enters 999,999 (max = 9,999,999).
ENTER B PS(CNTS) 0	Requests Channel B Preset in Counts. User enters 0 which means system will not preset on B counts (max = 9,999,999).
ENTER BKG A(XXXXX.XX CPM) 14	Requests alpha bkg cpm be subtracted from gross alpha cpm. User input represents 0.14 cpm bkg subtract (default "0" indicates no subtract).
ENTER BKG B(XXXXX.XX CPM) 95X 94	Requests beta bkg cpm be subtracted from gross beta cpm. User enters wrong value, abort by entering "X" after value. User inputs 0.94 cpm bkg subtract.
ENTER Ka(XXXX.XXX) 333	Requests denominator for A/Ka column. User enters .333 (max = 9,999.999).
ENTER Kb(XXXX.XXX) 550	Requests denominator for B/Kb column. User enters .550 (max = 9,999.999).
ARE ALL THE GROUP INPUTS CORRECT (Y/N)? Y	If "N", the program again asks the user for the correct information.
DO YOU WANT TO DEFINE ANOTHER GROUP (Y/N)? N	If "Y", the program asks for the new group and the above question/answer format is repeated.

When the above question is answered N, the system will print a summary of the groups' parameters, as shown below.

#	IDENTIFICATION	TIME	PST A	PST B	BKG A	BKG B	Ka	Kb
A	AIR SAMPLE	1.00	999999	0	0.14	0.94	0.333	0.550
B		0.00	0	0	0.00	0.00	0.000	0.000
C		0.00	0	0	0.00	0.00	0.000	0.000

Fig. 2. Tennelec LB-5100 user interface session.

#	IDENTIFICATION	TIME	PST A	PST B	BKG A	BKG B	KA	KB
A	STD/S	10.00	0	0	0.00	0.00	0.000	0.000
B	QA/S + SAMPL	100.00	0	0	0.00	0.00	0.000	0.000
C		0.00	0	0	0.00	0.00	0.000	0.000
D		0.00	0	0	0.00	0.00	0.000	0.000
E		0.00	0	0	0.00	0.00	0.000	0.000

TUE MAR 6,1990
GROUP A STD/S

SN	TIME	COUNTS A	COUNTS B	CPM A	CPM B	A/0000.000	B/0000.000	2sig A
B	HR:MIN:SEC							
1	10.00	881	85	88.10	8.50			6.73%
%	08:48:04							
2	10.00	10	45125	1.00	4512.50			63.24%
%	08:58:17							

TUE MAR 6,1990
GROUP B QA/S + SAMPL

SN	TIME	COUNTS A	COUNTS B	CPM A	CPM B	A/0000.000	B/0000.000	2sig A
B	HR:MIN:SEC							
3	100.00	39	195	0.39	1.95			32.02%
%	10:38:41							
4	100.00	144	824	1.44	8.24			16.66%
%	12:18:57							
5	100.00	156	798	1.56	7.98			16.01%
%	13:59:12							
6	100.00	140	800	1.40	8.00			16.90%
%	15:39:28							
7	100.00	77	967	0.77	9.67			22.79%
%	17:19:43							
8	100.00	18	424	0.18	4.24			47.14%
%	18:59:59							
9	100.00	41	305	0.41	3.05			31.23%
%	20:40:14							
10	100.00	19	374	0.19	3.74			45.88%
%	22:20:30							
11	100.00	18	779	0.18	7.79			47.14%
%	00:00:45							

#	IDENTIFICATION	TIME	PST A	PST B	BKG A	BKG B	KA	KB
A	STD/S	10.00	0	0	0.00	0.00	0.000	0.000
B	QA/S + SAMPL	100.00	0	0	0.00	0.00	0.000	0.000
C		0.00	0	0	0.00	0.00	0.000	0.000
D		0.00	0	0	0.00	0.00	0.000	0.000
E		0.00	0	0	0.00	0.00	0.000	0.000

Fig. 3. Tennelec LB-5100 data output sheet.

AMERICIUM-241 IN ENVIRONMENTAL MATRICES (GREATER THAN 2-GRAM SAMPLES) — ALPHA SPECTROMETRY

Analyte: Americium-241	**Method No.:** ER110
Matrix: Soil and biologicals	**Minimum Detectable Activity:** 0.02 pCi/sample
Procedure: Radiochemistry and alpha spectrometry	**Accuracy and Precision:** 109% ± 28%
Effective Date: 09/01/76	**Authors:** Daryl Knab Richard J. Peters Wanita Eberhart

SAFETY NOTE: Before beginning this procedure, read all of the Material Safety Data Sheets for the chemicals listed in Sec. 7. Read Sec. 4.3 of the EM-9 Safety Manual for information on personal protective clothing and equipment. Read Sec. 12 of this procedure and Source Materials 13.10 to 13.13 for proper waste disposal practices.

1. Principle of Method

1.1. Gamma-ray spectrometry in Method No. ER130 is used to screen samples for 59.5-keV ^{241}Am activity. Quantitative data are reported for samples above the instrumental detection limit. Samples below the detection limit are subjected to chemical separation and alpha spectrometry.

1.2. For alpha spectrometry, americium is extracted from dissolved soil by HDEHP • P_2O_5 into dodecane from 6 M HCl. It is separated from most actinides and lanthanides by anion exchange with an alcohol-nitric acid solution and the americium is collected by coprecipitation on NdF_3 for counting.

1.3. All samples are traced with ^{243}Am prior to wet ashing.

2. Sensitivity

2.1. Sensitivity is limited by the counter background.

2.2. For routine measurements with an 80,000-s counting period and a counting efficiency of 25%, the minimum detection limit (the 95th percentile of the background distribution) is 0.02 pCi per sample. Typical sample aliquots are 10 g.

3. Accuracy and Precision

3.1. Recovery of ^{243}Am tracer is highly variable (10% to 80%) with an average of approximately 55% for soils and biological samples.

3.2. The National Institute of Standards and Technology and the DOE Environmental Measurements Laboratory (EML) produce and distribute certified materials for americium analysis in several matrices. We prepare in-house materials by pipetting known amounts of americium standards onto blank environmental matrices. Results on 1985 EML-Quality Assessment Program samples are indicative of our accuracy and precision (the mean ± 1 standard deviation obtained from the following table is 109% ± 28%).

	May		November	
Matrix	EM-9	EML	EM-9	EML
Tissue (fCi/g)	4 ± 1	5 ± 1	367 ± 22	370 ± 7
Vegetation (fCi/g)	—	—	360 ± 60	320 ± 10
Silicates (fCi/g)	3.7 ± 0.8	2.4 ± 0.2	215 ± 37	220 ± 20

4. Interferences

4.1. Mass loading of the filtered samples in excess of 100 μg interferes with alpha spectroscopy resolution.

4.2. Thorium-228, ^{224}Ra, ^{222}Rn, and ^{238}Pu interfere with ^{241}Am alpha spectroscopy determinations.

5. Collection and Storage of Samples

5.1. There are no special collection and storage requirements for dry solid environmental matrices.

6. Apparatus

6.1. Funnels: 250-mL, separatory.

6.2. Graduated cylinder: 2-L.

6.3. Beakers: 100- and 200-mL, tall form, new.

6.4. Beakers: 600-mL, Teflon.

6.5. Squeeze bottle: 500-mL, polyethylene.

6.6. Centrifuge tubes: 50-mL, polypropylene.

6.7. Centrifuge.

6.8. Ion-exchange columns: 197-mm-long by 7-mm-i.d., with a 100-mL top reservoir and a tip tapered to 2 mm i.d.

6.9. Filter apparatus: 25-mm membrane.

6.10. Filter paper: Whatman No. 42 and Whatman GF/A glass fiber.

6.11. Screen: stainless steel, for 25-mm filter No. 79791, Gelman.

6.12. Disks: 1-in.-diam, stainless-steel.

6.13. Filters: 25-mm Millipore, 0.05-μm pore size.

6.14. Anaslide filter holder.

6.15. Pipettes: 50- and 250-μL with disposable tips.

6.16. Bottles: 500-mL, polyethylene.

6.17. Tubes: 50-mL, plastic, centrifuge.

6.18. Stirring bar: 1.5-in., Teflon-coated.

6.19. Hot plate: magnetic stirring, Corning Model PC-351.

6.20. Alpha spectrometer: equipped with a 1024-channel analyzer using 300-mm^2 silicon-surface barrier detectors.

7. Reagents

7.1. HDEHP (0.015 M). Add 7.5 g of P_2O_5 to 50 g of bis(2-ethylhexyl) hydrogen phosphate. Mix for 1 h. Dilute with 2 kg of dodecane and let stand overnight.

7.2. $(NH_4)_2CO_3$ • 10% NH_4OH. Saturate a 10% solution of ammonium hydroxide with ammonium carbonate.

7.3. 3 M HCl • 3 M HF. Dilute 250 mL of concentrated HCl and 100 mL of concentrated HF with distilled water to a final volume of 1000 mL.

7.4. Yttrium carrier (5 mg/mL). Dissolve 8.3 g of Y_2O_3 in 10 mL of 8 M HNO_3 and dilute to a total volume of 1000 mL with distilled water.

7.5. 1 M HCl • 1 M HF. Dilute 80 mL of concentrated HCl and 35 mL of concentrated HF with distilled water to a final volume of 1000 mL.

7.6. Boric acid (saturated). Add enough H_3BO_3 crystals (approximately 6 g at room temperature) to 100 mL of distilled water so that some of the crystals do not dissolve.

7.7. Nitric acid (concentrated 69%, reagent-grade).

7.8. Hydrochloric acid (concentrated, reagent-grade).

7.9. Perchloric acid (concentrated, reagent-grade).

7.10. Hydrofluoric acid (concentrated 48%, reagent-grade).

7.11. Hydrochloric acid (6 M). Dilute 500 mL of concentrated HCl with distilled water to a final volume of 1000 mL.

7.12. NH_2OH • HCl. Fill a 1-lb bottle of NH_2OH • HCl with distilled water.

7.13. Ethyl acetate.

7.14. 60% ethanol • 40% 6 M HNO_3. Add 900 mL of ethanol to 600 mL of 6 M HNO_3. Prepare fresh before each use.

7.15. 75% methanol • 25% 6 M HNO_3. Add 1800 mL of methanol to 600 mL of 6 M HNO_3.

7.16. 60% methanol • 40% 6 M HNO_3. Add 1440 mL of methanol to 960 mL of 6 M HNO_3.

7.17. 60% methanol • 40% 2.5 M HNO_3. Add 1440 mL of methanol to 960 mL of 2.5 M HNO_3.

7.18. Nitric acid (6 M). Dilute 375 mL of concentrated HNO_3 to 1000 mL with distilled water.

7.19. Nitric acid (2.5 M). Dilute 156 mL of concentrated HNO_3 to 1000 mL with distilled water.

7.20. Nitric acid (1 M). Dilute 63 mL of concentrated HNO_3 to 1000 mL with distilled water.

7.21. Ethanol saturated with sodium nitrite.

7.22. Resin (MP-1, 100-200 mesh).

7.22.1. Transfer 1 lb of resin to a 2-L graduated cylinder with 6 M HNO_3. Let the resin settle and decant the liquid.

7.22.2. Add deionized water to a volume of 2 L. Mix thoroughly and allow to settle. Decant the liquid.

7.22.3. Repeat the water washes until the pH of the solution is greater than 2.

7.23. 1 M HNO_3 • 1 M HF. Dilute 62 mL of concentrated HNO_3 and 36 mL of concentrated HF to 1000 mL with water.

7.24. Isopropyl alcohol.

7.25. Neodymium (1 mg/mL). Dissolve 1.17 g of Nd_2O_3 in a minimum amount of hot 6 M HNO_3. Dilute to 1000 mL with deionized water.

7.26. Americium-243 tracer solution (99.98% isotopic purity). Dilute to 10 dpm/mL. Lawrence Livermore Laboratory, Radiochemistry Division.

8. Calibration and Standards

8.1. All samples are traced with calibrated ^{243}Am tracer solution that has been standardized by electrodeposition and gross alpha counting. The value is checked yearly.

8.2. Calibration of the alpha spectrometer.

8.2.1. The alpha secondary standard (No. 5) contains the isotopes ^{238}Pu, ^{239}Pu, and ^{242}Pu and is standardized in a gas-flow proportional counter using the National Bureau of Standards (NBS) Standard Reference Material (SRM) 4906-B17, the ^{238}Pu primary standard.

8.2.2. Calibration counts are made for 1020 s. The efficiency of each detector is determined by integrating the counts in 20 channels (13 channels to the left of the peak and 6 channels to the right of the peak) of the energy spectrum of each of the three isotopes.

8.2.3. Background counts are accumulated for each energy spectrum for each detector for 60,000 s.

9. Procedure

9.1. Sample preparation.

9.1.1. Milling and sizing of samples is very critical to obtain representative samples. The following dissolution procedures are used if the samples are to be measured only for ^{241}Am. If plutonium isotopes are to be determined simultaneously, go to Step 9.1.1 of Method No. ER160 and return the solution from ER160, Step 9.2.6.2 to Step 9.1.2.13 below.

9.1.2. Soil dissolution.

9.1.2.1. Weigh a 10-g aliquot of dry soil into a 500-mL polyethylene bottle.

9.1.2.2. Add 1.0 mL of ^{243}Am tracer to the sample.

9.1.2.3. **Carefully** add approximately 200 mL of concentrated HNO_3. Carbonate soils can react vigorously. Add 200 mL of 48% HF.

CAUTION: HF is extremely hazardous. Wear rubber gloves, eye protection, and a lab coat. Completely clean up all spills and wash thoroughly after using HF. Make all HF transfers in an exhaust fume hood to avoid the toxic fumes.

9.1.2.4. Place a 1.5-in. Teflon-coated stirring bar in the bottle and cap loosely. The cap must be loose enough to permit generated gases (principally SiF_4 and nitrous oxides) to escape to prevent pressure buildup.

9.1.2.5. Place the bottle in a hot water bath on a magnetic stirring hot plate and stir the sample overnight with heating. Cover the bottle and beaker with plastic wrap to keep the water from evaporating from the water bath.

NOTE: A 1-L beaker on a Corning Model PC-351 hot plate set at "2" can be left unattended for 15 h (overnight).

9.1.2.6. Allow the mixture to settle for 10 min and decant into a 600-mL Teflon beaker.

9.1.2.7. A second leach with HF or HF • HNO_3 may be needed if large quartz crystals are present. Finely suspended material generally will be dissolved in the subsequent evaporation. Large amounts of certain mineral crystals, like magnetite, zircons, etc., may require special treatment.

9.1.2.8. Evaporate the mixture to dryness.

9.1.2.9. Add approximately 200 mL of concentrated HCl and 5 g of H_3BO_3 to the polyethylene bottle containing the soil residue. Cap the bottle and shake well. Loosen the cap slightly and let the mixture stand until the completion of Step 9.1.2.8.

9.1.2.10. Pour the $HCl \cdot H_3BO_3$ mixture into the Teflon beaker. Rinse the bottle with a little distilled water and add the water rinse to the Teflon beaker. Remove the stirring bar and discard the bottle.

9.1.2.11. Heat the mixture in the Teflon beaker until approximately 10 mL remains. Add 100 mL of concentrated HNO_3 and boil to remove the HCl.

9.1.2.12. **CAUTIOUSLY** add 30% H_2O_2 a few drops at a time from a squeeze bottle to oxidize any organic residues. Continue adding HNO_3 and H_2O_2 until the evaporated residue is light yellow and clear.

9.1.2.13. Evaporate the solution until the first salts appear.

9.1.2.14. Dissolve the residue in 20 mL of 6 M HCl. Add 1 g of H_3BO_3 and allow the solution to cool.

9.1.2.15. Cover the beaker with plastic wrap until ready for solvent extraction.

9.1.3. Vegetation dissolution.

9.1.3.1. Large samples are dried at approximately 60°C in tared glass beakers (up to 4 L) until a constant weight is obtained on successive days. Record the tare, gross, and dry weights.

9.1.3.2. Add 50 mL of distilled water to the beaker. Cover with perforated aluminum foil. Ash at 100-200°C for 8 h.

9.1.3.3. Ash at 300°C overnight.

9.1.3.4. Ash at 400°C for 8 h.

9.1.3.5. Ash at 500°C until the sample ash is white.

9.1.3.6. Cool and weigh the sample.

9.1.3.7. Repeat Steps 9.1.3.5 and 9.1.3.6 until a constant weight is achieved. Record the total ash weight.

NOTE: The entire ash sample is frequently transferred to a 500-mL polyethylene bottle for gamma-emitting radionuclide analysis using Ge(Li) gamma-ray spectroscopy.

9.1.3.8. Dissolve the entire sample (up to 10 g) in approximately 200 mL of HNO_3. Add 1 mL of ^{243}Am tracer solution before continuing with the dissolution.

9.1.3.9. Heat the sample on a hot plate and add 30% H_2O_2 in small amounts until the sample dries to a clear residue. The color may vary from pure white to deep lilac.

NOTE: Attention to the temperature is important, as samples can bump violently if too hot.

9.1.3.10. Dissolve the residue in a mixture of 50 mL of concentrated HNO_3 and 25 mL of concentrated HCl. Evaporate to approximately 25 mL to remove the HCl.

9.1.3.11. Remove the sample from the hot plate and cool. Dilute to 100 mL with 7.2 N HNO_3. Let the sample stand overnight.

9.1.3.12. Filter the sample using a Whatman No. 42 filter paper. Transfer all the residue onto the paper with water. Save the filtrate for Step 9.1.3.17.

9.1.3.13. Return the filter paper and residue to a 200-mL Teflon beaker. Add 100 mL of HF and 100 mL of HNO_3 to the beaker. Evaporate to dryness overnight on a hot plate set on low.

9.1.3.14. Dissolve the residue in 50 mL of HNO_3 and treat with 30% H_2O_2 as in Step 9.1.3.9.

9.1.3.15. Dissolve the residue in a mixture of 50 mL concentrated HNO_3 and 25 mL of concentrated HCl. Boil to a volume of approximately 25 mL to remove all HCl. Add 5 g of H_3BO_3.

9.1.3.16. Remove the sample from the hot plate and cool. Dilute to 100 mL with water.

9.1.3.17. Filter the sample through a Whatman GF/A glass-fiber filter into the beaker containing the filtrate from Step 9.1.3.12.

Wash the filter with water. Evaporate the solution until just dry.

9.1.3.18. Add 20 mL of 6 M HCl and cover the beaker with plastic wrap until ready for solvent extraction.

9.1.4. Tissue dissolution (including bone).

9.1.4.1. Weigh a 10-g aliquot of wet soft tissue or bone, excluding feathers and hide, into a 600-mL glass beaker.

9.1.4.2. Add 1 mL of ^{243}Am tracer.

9.1.4.3. Wet-ash the sample with concentrated HNO_3 and 30% H_2O_2 until a clear or light yellow solution is obtained.

NOTE: Do not use HF because insoluble CaF_2 precipitates are formed.

9.1.4.4. Evaporate the solution until just dry.

9.1.4.5. Add 20 mL of concentrated HCl and evaporate until just dry. Cool and add 20 mL of 6 M HCl. Cover the beaker with plastic wrap until ready for solvent extraction.

9.2. Solvent extraction.

9.2.1. Add approximately 10,000 cts of Nd-147 tracer to the sample.

9.2.2. Evaporate the solution to dryness on low heat using either the sample as dissolved above or the americium fraction from the plutonium anion-exchange column (see Step 9.2.6.1 of the plutonium procedure, Method No. ER160).

9.2.3. Add 20 mL of concentrated HCl to the dissolved sample residue, rinsing the sides of the beaker. Evaporate the sample to dryness.

9.2.4. Add 200 mL of concentrated HCl. Evaporate to 100 mL to convert the solution to 6 M HCl. Add additional 6 M HCl as necessary until dissolution is complete.

9.2.5. Cool the sample to room temperature.

9.2.6. Add 50 mL of 0.015 M HDEHP to the solution.

NOTE: Maintain an organic:aqueous ratio greater than 1:5.

9.2.7. Stir the sample for 10 min on a magnetic stirrer. Pour the mixture into a separatory funnel.

9.2.8. Allow the phases to separate for 10 min or until separation is complete.

9.2.9. Return the aqueous phase and interface to the beaker.

9.2.10. Add 50 mL of HDEHP to the aqueous phase and stir for 5 min.

9.2.11. Gently pour the mixture into the separatory funnel. Allow the phases to separate.

9.2.12. Drain the aqueous phase into the beaker. Retain the interface in the separatory funnel.

9.2.13. Add 100 mL of 6 M HCl to the organic phase in the separatory funnel.

NOTE: Maintain an organic:aqueous ratio of 1:1.

9.2.14. Mix for 1 min and let the phases separate.

9.2.15. Drain the acid wash into the beaker.

9.2.16. Dilute the organic phase 1:1 with 100 mL of ethyl acetate and allow to stand for at least 30 min.

9.2.17. Add 50 mL of saturated $(NH_4)_2CO_3 \cdot 10\%\ NH_4OH$ to the organic phase.

NOTE: Maintain an organic:aqueous ratio of 4:1.

9.2.18. Carefully release the gas pressure. Shake for 3 min. Allow the phases to separate.

9.2.19. Drain the aqueous phase into a 200-mL tall form beaker.

9.2.20. Add 50 mL of $(NH_4)_2CO_3 \cdot 10\%\ NH_4OH$ to the organic phase. Shake for 3 min. Allow the phases to separate overnight.

9.2.21. Shake for 2 min and allow the phases to separate.

9.2.22. Drain the aqueous phase and the interface into the beaker. Discard the organic phase into a plastic-coated glass bottle containing 200 mL H_2O, label organic waste. Seal the bottle with a stopper compatible with the solution that will release if pressure builds up in the container.

9.2.23. Place the beaker on a hot plate and evaporate the solution to dryness on low heat.

9.2.24. Add 20 mL of concentrated HNO_3 and 20 mL of concentrated HCl to the beaker. Evaporate to dryness.

9.2.25. Add 10 mL of $HClO_4$ and 10 mL of HNO_3 to the beaker. Cover with a watch glass.

9.2.26. Place samples on a hot plate on low heat. Evaporate to $HClO_4$ fumes. Transfer two samples at a time to a hot plate with the temperature set on high.

9.2.26.1. Watch for the reflux line. Vapor will go to the top of the watch glass and condensate will run down the sides of beaker.

9.2.26.2. When the process is complete, transfer the beaker to a hot plate set at 100°C.

9.2.26.3. Remove the watch glass and evaporate to 1 mL.

9.2.27. Transfer the residue to a 50-mL plastic centrifuge tube with 3 M HCl • 3 M HF to a volume of approximately 30 mL. Heat in a water bath for 10 min.

NOTE: If a large precipitate remains, add HF 1 mL at a time and heat for 10 min between additions. Continue addition of HF until most of the precipitate dissolves.

9.2.28. Add 3 mL of HF and 1 mL of yttrium carrier and heat for 20 min.

9.2.29. Remove the centrifuge tube from the water bath and cool for 20 min.

9.2.30. Centrifuge for 5 min and decant the supernate.

9.2.31. Wash the precipitate with 20 mL of 1 M HCl • 1 M HF. Centrifuge and discard the wash.

9.2.32. Add 3 mL of saturated H_3BO_3. Slurry the precipitate. Add 2 mL of concentrated HNO_3 and heat in a hot water bath until the precipitate dissolves.

9.2.33. Cover the sample with plastic wrap until all samples are ready for anion exchange.

9.3. Alcohol-nitric acid anion exchange.

9.3.1. Add 7.5 mL of ethanol saturated with $NaNO_2$ in the ratio of 3:2 to the sample. Mix and let stand for 1 h.

9.3.2. Anion-exchange column preparation.

9.3.2.1. Pack a small glass wool plug loosely into the tip of the ion-exchange tube.

9.3.2.2. Transfer MP-1, 100-200 mesh resin slurry into the tube to a settled height of 9 cm.

9.3.2.3. Place a beaker under the column and wash the resin with two 20-mL aliquots of fresh 60% ethanol • 40% 6 M HNO_3.

9.3.2.4. Cover the column with a watch glass to minimize alcohol evaporation.

9.3.3. Pour the sample through the column.

9.3.4. Wash the beaker and column with 5 mL of 60% ethanol • 40% 6 M HNO_3.

9.3.5. Wash the column twice with 20-mL aliquots of 75% methanol • 25% 6 M HNO_3.

9.3.6. Wash the column twice with 20-mL aliquots of 60% methanol • 40% 6 M HNO_3.

9.3.7. Add 200 mL of H_2O to the sample and evaporate on low heat to 100 mL. Count the solution to determine separation recovery from the column.

9.3.8. Place a new 100-mL beaker under the column. Elute americium from the column with two 20-mL aliquots of 60% methanol • 40% 2.5 M HNO_3.

9.3.9. Place the beaker on a hot plate and evaporate to 2 mL using low heat.

9.3.10. Add 2 mL of concentrated HCl to the beaker and evaporate to dryness. **DO NOT BAKE.**

9.3.11. Add 5 mL of concentrated HNO_3 to the beaker and evaporate to dryness. **DO NOT BAKE.**

9.3.12. Add 5 mL of 1 M HNO_3 to the beaker. Cover with plastic wrap until all samples are ready for filtration.

9.4. Filtration.

9.4.1. If the sample is dry, add 5 mL of 1 M HNO_3.

9.4.2. Prepare a mounting planchet.

9.4.2.1. Engrave the sample number on the back of the planchet.

9.4.2.2. Cut a piece of two-sided tape to fit each planchet.

9.4.3. Add 50 µg of Nd to each sample.

9.4.4. Prepare wash for filters.

9.4.4.1. For each sample fill a centrifuge tube with 5 mL of 1 M HNO_3 • 1 M HF and 50 µL of Nd.

9.4.4.2. Pour this solution through the filter before the sample.

9.4.5. Prepare filters.

9.4.5.1. Place a metal screen in the tower.

9.4.5.2. Place a millipore filter on top of the screen and float with a little distilled water to seat the filter. Turn on the vacuum to complete seating.

9.4.5.3. Attach the funnel, making sure that it is tight.

9.4.5.4. Add approximately 5 mL of distilled water to check the system.

9.4.5.5. Add wash for filter from Step 9.4.4.

9.4.5.6. Add 250 µL of HF to the sample **JUST BEFORE** filtering. Process one sample at a time and filter immediately.

9.4.5.7. Wash the beaker and tower with 5 mL of 1 M HNO_3 • 1 M HF.

9.4.5.8. Rinse the tower with 1 mL of 1 M HNO_3 • 1 M HF.

9.4.5.9. Rinse the tower two times with 1 mL of isopropyl alcohol. After the alcohol has passed through the filter, remove the tower and air dry the filter.

9.4.6. Mount the sample.

9.4.6.1. Remove the top layer of the two-sided tape.

9.4.6.2. Place the filter on the planchet and center it. Check the edges for seal.

9.4.6.3. Place the filter in a millipore container to transport to the count room.

10. Operation of Equipment

10.1. Refer to the operating manual for the alpha spectrometer.

10.2. Refer to Method No. CR100 for the alpha spectrometric counting procedure.

11. Calculations

11.1. Count samples for 80,000 s. Determine the counts for ^{241}Am and ^{243}Am by integrating the counts in 14 channels for each energy region.

11.2. Counting efficiency determinations for ^{241}Am and ^{243}Am.

11.2.1. Counting efficiencies for the tracer peak (E_t) and the analyte peak (E_x) will be calculated separately, using the same equations. The counting efficiency of the counter for a standard run is given by

$$E = \frac{\left(\frac{C_s}{T_s} - \overline{B}_s\right)}{A_s} ,$$

where E = counting efficiency in the peak of interest (counts per disintegration),
C_s = gross counts for the standard,
T_s = counting time for the standard (min),
$\overline{B}_s$ = average background count rate in the peak of interest, and
A_s = activity of the standard (dpm).

11.2.2. The average counting efficiency is calculated from a running average of the last n values of individual E determinations.

$$\overline{E} = \frac{\sum_{i=1}^{n} E_i}{n} ,$$

where $\overline{E}$ = the running average of the counting efficiency,
E_i = the individual counting efficiencies from Step 11.2.1, and
n = the number of measurements used for calculation.

11.2.3. The standard deviation of $\overline{E}$ is

$$SD(\overline{E}) = \overline{E} \times \sqrt{\frac{\sum_{i=1}^{n} (E_i - \overline{E})^2 + SD(\overline{B}_s)^2}{(n-1)\, n\, \overline{E}^2} + \frac{(\sigma_{A_s})^2}{A_s^2}} ,$$

where $SD(\overline{E})$ = standard deviation of the average efficiency,
$\overline{E}$ = average efficiency (counts per disintegration) from Step 11.2.2,
E_i = individual efficiencies from Step 11.2.1,
$SD(\overline{B}_s)$ = standard deviation of the average background in the peak of interest,
n = number of values of E used,
A_s = activity of the standard (dpm), and
σ_{A_s} = stated standard deviation associated with the known value of A_s.

11.2.4. The standard deviation of an individual E is

$$SD(E) = E \times \sqrt{\frac{\frac{C_s}{T_s^2} + \frac{C_{bs}}{T_{bs}^2}}{\left(\frac{C_s}{T_s} - \frac{C_{bs}}{T_{bs}}\right)^2} + \frac{(\sigma_{A_s})^2}{A_s^2}} ,$$

where $SD(E)$ = standard deviation of E (counts per disintegration),
E = counting efficiency from Step 11.2.1,
C_s = gross counts for the standard,
T_s = counting time for the standard,
C_{bs} = gross counts for the background,
T_{bs} = counting time for the background,
A_s = activity of the standard, and
σ_{A_s} = standard deviation of standard activity.

11.3. Background determination. There will be different backgrounds for the tracer (B_t), and the analyte (B_x) peaks, but the calculations will be the same.

11.3.1. The background count rate is

$$B = \frac{C_b}{T_b} ,$$

where B = background count rate (cpm),
C_b = gross counts of background, and
T_b = counting time of the background (min).

11.3.2. The running average background count rate is calculated by

$$\overline{B} = \frac{\sum_{i=1}^{n} B}{n} ,$$

where $\overline{B}$ = average background count rate,
B = background count rate, and
n = numbers of values used.

11.3.3. The standard deviation for the average background count rate is calculated by

$$SD(\overline{B}) = \overline{B} \times \sqrt{\frac{\sum_{i=1}^{n} (B - \overline{B})^2}{(n - 1)}} ,$$

where $SD(\overline{B})$ = standard deviation of the running average of the background,
$\overline{B}$ = average background from Step 11.3.2,
B = individual background count rate, and
n = number of values used.

11.3.4. The minimum detectable activity for low-background instruments is determined by

$$MDA = \frac{(4.65 \times SD\ (B_x)\ ) + 3}{K \times T_x} \quad ,$$

where MDA = minimum detectable activity (dpm),
$SD\ (B_x)$ = standard deviation of the background count rate (cpm),
K = constant in sample units,
T_x = counting time,
4.65 = constant, and
3 = constant.

11.4 Tracer recovery.

11.4.1. The tracer recovery is calculated from

$$R_t = \frac{C_t}{T_t \times E_t \times A_t} \quad ,$$

where R_t = fraction of the tracer recovered,
C_t = total counts in the tracer peak,
T_t = counting time for the tracer (min),
E_t = counting efficiency for the tracer peak, and
A_t = activity of tracer added to the sample (dpm).

11.4.2. The standard deviation of the tracer recovery is

$$SD(R_t) = R_t \times \sqrt{\frac{\frac{C_t}{T_t^2} + SD(B_t)}{\left(\frac{C_t}{T_t} - \overline{B}_t\right)^2} + \frac{\sigma_{A_t}^2}{A_t^2}} \quad ,$$

where $SD(R_t)$ = standard deviation of the tracer recovery,
R_t = tracer recovery fraction,
C_t = counts in the tracer peak,
T_t = counting time (min),
$SD(B_t)$ = standard deviation of the background in the tracer peak,
$\overline{B}_t$ = the average background in the tracer peak,

σ_{A_t} = standard deviation of the known value of A_t, and
A_t = activity of the standard.

11.5. Sample activity.

11.5.1. The activity of the sample is given by

$$A_x = \frac{\left(\frac{C_x}{T_x} - \overline{B}_x\right)}{\overline{E}_x \times R_t} ,$$

where A_x = sample activity (dpm),
C_x = gross counts of the sample,
T_x = counting time of sample (min),
$\overline{B}_x$ = average background count rate (cpm),
$\overline{E}_x$ = average counting efficiency, and
R_t = tracer recovery fraction.

11.5.2. The standard deviation of the activity of the sample is given by

$$SD\,(A_x) = |A_x| \times \frac{\sqrt{\frac{C_x}{T_x^2} + SD^2\,(\overline{B}_x)}}{\left(\frac{C_x}{T_x} - \overline{B}_x\right)^2} ,$$

where $SD\,(A_x)$ = standard deviation of sample activity (dpm),
$|A_x|$ = absolute value of A_x from Step 11.5.1,
C_x = gross counts of the sample,
T_x = sample counting time,
$\overline{B}_x$ = average background count rate, and
$SD(\overline{B}_x)$ = standard deviation of the average background.

11.6. Calculation to put the radiometric measurement into the required form for final reporting.

11.6.1. Reported activity.

$$R_x = \frac{A_x}{K \times Q} ,$$

where R_x = sample activity in correct units for reporting (pCi/L),
A_x = sample activity (dpm),
K = conversion factor (2.22 pCi/dpm), and
Q = sample quantity analyzed.

11.6.2. The propagated uncertainty of the reported activity is calculated by

$$U_x = |R_x| \times \sqrt{\frac{SD\,(A_x)^2}{A_x^2} + \frac{SD\,(\overline{E}_x)^2}{\overline{E}_x^{\,2}} + \frac{SD\,(\overline{E}_t)^2}{\overline{E}_t^{\,2}} + \frac{SD\,(R_t)^2}{R_t^{\,2}} + \frac{SD\,(Q)^2}{Q^2}} \quad ,$$

where U_x = propagated uncertainty of the reported activity,
R_x = reported activity,
$SD\,(A_x)$ = standard deviation of sample activity,
$SD\,(\overline{E}_x)$ = standard deviation of the average sample efficiency,
$SD\,(\overline{E}_t)$ = standard deviation of the average tracer efficiency,
$SD(R_t)$ = standard deviation of the tracer recovery fraction,
$SD\,(Q)$ = standard deviation of the sample quantity aliquoted,
A_x = sample activity,
$\overline{E}_x$ = average counting efficiency in the sample peak,
$\overline{E}_t$ = average counting efficiency in the tracer peak,
R_t = tracer recovery fraction, and
Q = sample quantity aliquoted in reporting units.

12. Proper Waste Disposal Practices

12.1. Discard the filter and residue from Step 9.1.3.17 in the trash.

12.2. Discard the aqueous solution from Step 9.2.11 into the acid waste drain.

12.3. Dispose of the organic waste from Step 9.2.22 as nonhazardous waste through EM-7 according to AR 10-3.

12.4. Discard the supernates from Steps 9.2.29 and 9.2.30 into the acid waste drain.

12.5. Discard the solution from Step 9.3.6.1 into the acid waste drain.

12.6. Discard the filtrate from Step 9.4.5.9 into the acid waste drain.

12.7. Solid radioactive waste.

12.7.1. Sample planchets are stored for approximately one year. The planchets are then disposed of in the low-level radioactive waste according to SOP 2.

12.7.2. Complete a waste profile form and forward to the EM-9 radioactive waste coordinator for each addition of waste to the container.

12.8. Excess sample is returned to the Sample Management section.

12.9. Waste pickup.

12.9.1. See AR 10-3 for general Laboratory policy on waste disposal.

12.9.2. Fill out the waste Profile Request Form (PRF) and send it to EM-8 along with the pertinent MSDS sheets. The form will be returned to the group waste management coordinator, who will return it to the waste generator.

12.9.3. After the PRF is returned signed off by EM-8 and with a reference number, fill out the Chemical Waste Disposal Request (CWDR) form. Send this form and the original PRF(s) to EM-7.

12.9.4. After the CWDR is returned, call HS-1 to have an HP technician monitor and tag the container.

12.9.5. After the container has been tagged by the technician call EM-7 to arrange for pickup of the container.

13. Source Materials

13.1. D. Knab and R. J. Peters, "The Extraction of Americium and Plutonium from Environmental Samples with HDEHP-P_2O_5," Los Alamos Scientific Laboratory document LA-UR-76-1365 (September 1976).

13.2. D. Knab, "A Procedure for the Determination of Americium in Complex Matrices," Los Alamos Scientific Laboratory report LA-7057 (February 1978).

13.3. D. Knab, "Determination of Americium in Small Environmental Samples," *Anal. Chem.* **51**, 1095-1097 (1979).

13.4. D. Knab, "Filtration and Alpha Spectrometric Determination of Am or Pu Coprecipitated with Neodymium Fluoride," Los Alamos Scientific Laboratory document LA-UR-80-2204 (1980).

13.5. C. W. Sill and F. D. Hindman, "Preparation and Testing of Standard Soils Containing Known Quantities of Radionuclides," *Anal. Chem.* **46**, 113-118 (1974).

13.6. R. L. Williams, "A Computerized Alpha-Particle Spectrometry System for the Analysis of Low-Level Thorium, Uranium, Plutonium, and Americium Fractions," *Int. J. Radiat. Isot.* **35**, 271-277 (1984).

13.7. E. Holm, "Review of Alpha-Particle Spectrometric Measurements of Actinides," *Int. J. Radiat. Isot.* **35**, 285-290 (1984).

13.8. *EML Procedures Manual*, 26th ed., H. L. Volchok and G. de Planque, Eds. (Environmental Measurements Laboratory, US Department of Energy, New York, New York, HASL-300, 1986).

13.9. L. A. Currie, "Limits for Qualitative Detection and Quantitative Determination," *Anal. Chem.* **40** (3), 586 (1968).

13.10. "Chemical, Hazardous, and Mixed Waste," Administrative Requirement 10-3, in *Environment, Safety, and Health Manual*, Los Alamos National Laboratory Manual, Chapter 1 (most recent edition).

13.11. "Disposal of Solid Radioactive Waste from EM-9 Group Areas at TA-59, OH-1", SOP2, in *Environmental Chemistry Group: Environment, Safety and Health Manual*, Appendix III (most recent edition).

13.12. "Handling and Disposal of Hazardous Materials", SOP3, in *Environmental Chemistry Group: Environment, Safety, and Health Manual*, Appendix III (most recent edition).

13.3. "Disposal of Solid Radioactive Waste from EM-9 Group Areas at TA-59, OH-1" SOP 2 in *Enviromental Chemistry Group: Environment, Safety, and Health Manual*, Appendix III.

Revisions or additions to the procedure are marked (▒▒▒▒). Where a section heading is marked, the entire section has been revised.

TABLE I. ENERGY SPECTRUM FROM ALPHA SPECTROMETER

Channel	Counts	Channel	Counts
60	0	86	18
61	2	87	22
62	1	88	11*
63	1	89	8
64	1	90	2
65	2	91	6
66	3	92	2
67	6	93	5
68	7	94	1
69	17	95	2*
70	14	96	4
71	8	97	4
72	10	98	11
73	14	99	11
74	26	100	9
75	25*	101	20
76	32	102	22—Peak ^{241}Am
77	44	103	18 (5.5 MeV)
78	63	104	11
79	85	105	9
80	108	106	8
81	102	107	4
82	125—Peak ^{243}Am	108	*
83	94 (5.3 MeV)	111	0

*Counts integrated over 14 channels, 7 to left and 6 to the right of the energy peak.

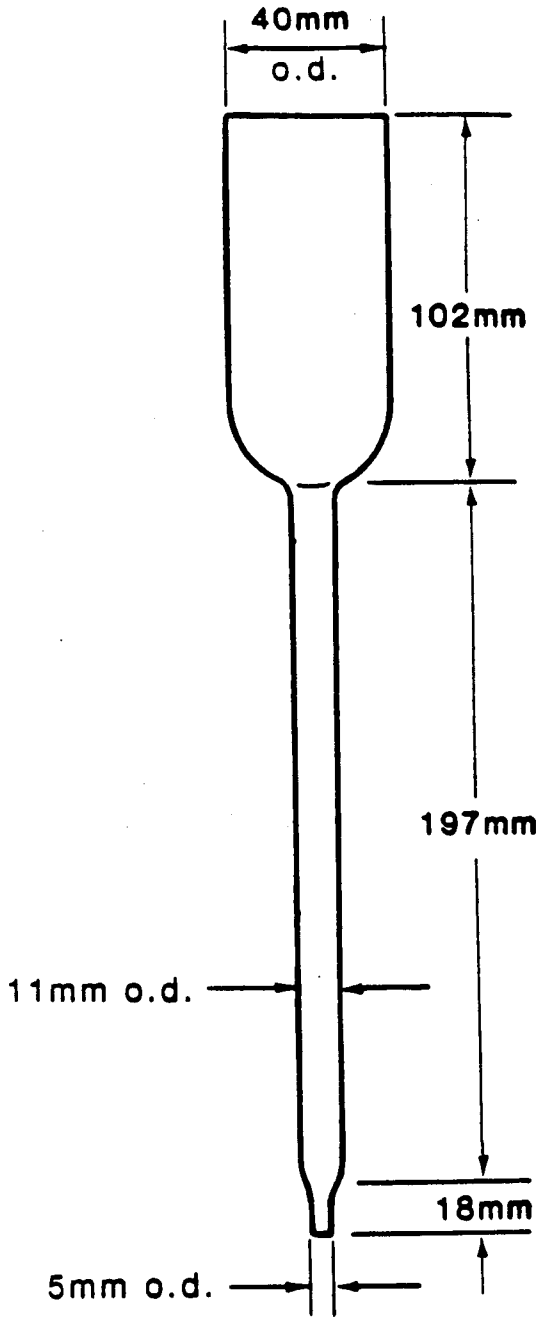

Fig. 1. Ion exchange column for americium.

AMERICIUM-241 IN ENVIRONMENTAL MATRICES (LESS THAN 2-GRAM SAMPLES) — ALPHA SPECTROMETRY

Analyte: Americium-241	**Method No.:** ER120
Matrix: Water and air particulates and biologicals with < 2 g solid residue	**Minimum Detectable Activity:** 0.02 pCi/sample
Procedure: Radiochemistry and alpha spectrometry	**Accuracy and Precision:** See Section 3
Effective Date: 02/01/78	**Authors:** Daryl Knab Richard J. Peters Wanita Eberhardt

SAFETY NOTE: Before beginning this procedure, read all of the Material Safety Data Sheets for the chemicals listed in Sec. 7. Read Sec. 4.3 of the EM-9 Safety Manual for further information on personal protective clothing and equipment. Read Sec. 12 of this procedure and Source Material 13.9 for proper waste disposal practices.

1. Principle of Method

1.1. Gamma-ray spectrometry in Method No. ER140 is used to screen samples for 59.5-keV ^{241}Am activity. Quantitative data are reported for those above the instrumental detection limit, while the remainder are subjected to chemical separation and alpha spectrometry.

1.2. For alpha spectrometry, americium is separated from matrix material by cation exchange in HCl. It is then separated from most actinides and lanthanides by anion exchange with alcohol-nitric acid solution and the americium is collected by coprecipitation on NdF_3 for counting by alpha spectrometry.

1.3. All samples are traced before wet ashing with ^{243}Am.

1.4. This procedure is suitable only for samples that have less than 2 g of solid residue. For samples with higher solid residue use Method No. ER110.

2. Sensitivity

2.1. Sensitivity is limited by the counter background.

2.2. For routine measurements with an 80,000-s counting period and a counting efficiency of 25%, the minimum detection limit (the 95th percentile of the background distribution) is 0.02 pCi per sample. Typical sample aliquots are

0.5 L of water, an air filter, or biological material containing less than 2 g of residue.

3. Accuracy and Precision

3.1. Average recovery of ^{243}Am tracer is 72% ± 5% for air filters and 57% ± 14% for waters.

3.2. The National Bureau of Standards and the DOE Environmental Measurements Laboratory (EML) produce and distribute certified materials for americium analysis in several matrices. We prepare in-house materials by pipetting known amounts of americium standards onto blank environmental matrices. Results on 1985 EML-Quality Assessment Program samples are indicative of our accuracy and precision (mean ± 1 standard deviation).

	May		November	
Matrix	EM-9	EML	EM-9	EML
Tissue (fCi/g)	4 ± 1	5 ± 1	367 ± 22	370 ± 7
Vegetation (fCi/g)	—	—	360 ± 60	320 ± 10
Filters (pCi/filter)	—	—	3.5 ± 0.3	5.3 ± 0.3
Waters (pCi/L)	75 ± 2	6 ± 6	39.9 ± 0.5	41 ± 3

4. Interferences

4.1. Mass loading of the filtered sample in excess of 100 μg interferes with alpha spectroscopy resolution.

4.2. Thorium-228, ^{224}Ra, ^{222}Rn, and ^{238}Pu interfere with ^{241}Am alpha spectroscopy determinations.

4.3. Excess mass loading on the cation column results in low ^{241}Am recoveries.

5. Collection and Storage of Samples

5.1. Acidify water samples with 10 mL of concentrated HNO_3 in the field at the time of collection. Filter samples, spike with tracer, and reacidify within 24 h of receipt in the laboratory and before sample storage.

5.2. There are no special collection and storage requirements for other environmental matrices.

6. Apparatus

6.1. Beakers: 100- and 200-mL, tall form, new.

6.2. Beakers: 600-mL, Pyrex.

6.3. Crucibles: 30-mL, with covers, platinum.

6.4. Graduated cylinder: 2-L.

6.5. Centrifuge tubes: 50-mL, polyethylene.

6.6. Centrifuge.

6.7. Ion exchange columns: 197-mm long by 7-mm i.d. with a 100-mL top reservoir and a tip tapered to 2 mm i.d.

6.8. Filter apparatus: 25-mm membrane.

6.9. Screen: stainless steel, for 25-mm filter No. 79791, Gelman.

6.10. Disks: 1-in.-diam, stainless steel.

6.11. Filters: 25-mm Millipore, 0.05-μm pore size.

6.12. Anaslide filter holder.

6.13. Pipettes: 50- and 250-μL with disposable tips.

6.14. Muffle furnace.

6.15. Hot plate: magnetic, stirring, Corning Model PC-351.

6.16. Alpha spectrometer: equipped with a 1024-channel analyzer using 300-mm^2 silicon-surface barrier detectors.

7. Reagents

7.1. Nitric acid (concentrated 69%, reagent-grade).

7.2. Hydrochloric acid (concentrated, reagent-grade).

7.3. Perchloric acid (concentrated, reagent-grade).

7.4. Hydrofluoric acid (concentrated 48%, reagent-grade).

7.5. Hydrochloric acid (0.5 M). Dilute 42 mL of concentrated HCl to 1000 mL with distilled water.

7.6. Hydrochloric acid (2 M). Dilute 167 mL of concentrated HCl to 1000 mL with distilled water.

7.7. Hydrochloric acid (4 M). Dilute 330 mL of concentrated HCl to 1000 mL with distilled water.

7.8. Resin (AG 50 x 4, 100-200 mesh, cation exchange). Bio-Rad Laboratories, Richmond, CA.

7.8.1. Transfer 1 lb of resin to a 2-L graduated cylinder with 2 L of 6 M HCl. Mix and let the resin settle. Decant the solution and resin fines.

7.8.2. Add deionized water to the resin to a volume of 2 L. Mix thoroughly and allow to settle. Decant the solution.

7.8.3. Continue the water washes until the wash pH is >2 (approximately five washes).

7.9. 1 M HCl • 1 M HF. Dilute 80 mL of concentrated HCl and 35 mL of concentrated HF with distilled water to a final volume of 1000 mL.

7.10. Boric acid (saturated). Add enough H_3BO_3 crystals (approximately 6 g at room temperature) to 100 mL of distilled water so that all of the crystals do not dissolve.

7.11. Hydrochloric acid (6 M). Dilute 500 mL of concentrated HCl to 1000 mL with distilled water.

7.12. NH_2OH • HCl. Fill a 1-lb bottle of NH_2OH • HCl with distilled water.

7.13. 60% ethanol • 40% 6 M HNO_3. Add 900 mL of ethanol to 600 mL of 6 M HNO_3. Prepare fresh before each use.

7.14. 75% methanol • 25% 6 M HNO_3. Add 1800 mL of methanol to 600 mL of 6 M HNO_3.

7.15. 60% methanol • 40% 6 M HNO_3. Add 1440 mL of methanol to 960 mL of 6 M HNO_3.

7.16. 60% methanol • 40% 2.5 M HNO_3. Add 1440 mL of methanol to 960 mL of 2.5 M HNO_3.

7.17. Nitric acid (6 M). Dilute 375 mL of concentrated HNO_3 to 1000 mL with distilled water.

7.18. Nitric acid (2.5 M). Dilute 156 mL of concentrated HNO_3 to 1000 mL with distilled water.

7.19. Nitric acid (1 M). Dilute 63 mL of concentrated HNO_3 to 1000 mL with distilled water.

7.20. Ethanol saturated with sodium nitrite.

7.21. Resin (MP-1, 100-200 mesh).

7.21.1. Transfer 1 lb of resin to a 2-L graduated cylinder with 6 M HNO_3. Let the resin settle and decant the liquid.

7.21.2. Add deionized water to a volume of 2 L. Mix thoroughly and allow to settle. Decant the liquid.

7.21.3. Repeat the water washes until the pH of the solution is >2.

7.22. 1 M HNO_3 • 1 M HF. Dilute 62 mL of concentrated HNO_3 and 36 mL of concentrated HF to 1000 mL with water.

7.23. Isopropyl alcohol.

7.24. Neodymium (1 mg/mL). Dissolve 1.17 g of Nd_2O_3 in a minimum amount of hot 6 M HNO_3. Dilute to 1000 mL with deionized water.

7.25. Americium-243 tracer (99.98% isotopic purity). Dilute to 10 dis/min per mL. Lawrence Livermore Laboratory, Radiochemistry Division.

7.26. Neodymium-147. Irradiate approximately 2 mg Nd_2O_3 at Omega West all day in R-4 or R-2. Dissolve the Nd_2O_3 in 5 mL 6 M HNO_3. Dilute to 50 mL with H_2O.

8. Calibration and Standards

8.1. All samples are traced with calibrated ^{243}Am tracer solution that has been standardized by electrodeposition and gross alpha counting. The value is checked annually.

8.2. Calibration of the alpha spectrometer.

8.2.1. The alpha secondary standard contains the isotopes ^{238}Pu, ^{239}Pu, and ^{242}Pu and is standardized in a gas flow proportional counter using the National Bureau of Standards (NBS) Standard Reference Material (SRM) 4906-B17, the ^{238}Pu primary standard.

8.2.2. Calibration counts are made for 1020 s. The efficiency of each detector is determined by integrating the counts in 20 channels (13 channels to the left of the peak and 6 channels to the right of the peak) of the energy spectrum of each of the three isotopes.

8.2.3. Background counts are accumulated for each energy spectrum for each detector for 60,000 s.

9. Procedure

9.1. Sample preparation.

9.1.1. Milling and sizing of solid samples is critical to obtain representative samples. The following dissolution procedures are used if the samples are to be measured for ^{241}Am. If plutonium isotopes are to be determined simultaneously, go to Step 9.1.2 of Method No. ER160 and return to Step 9.2.1 below.

9.1.2. Water samples.

9.1.2.1. Measure a 500-mL aliquot of the water sample into a 600-mL pyrex beaker.

9.1.2.2. Add 1 mL of ^{243}Am tracer to the sample.

9.1.2.3. Add 10 mL of concentrated HNO_3 and evaporate the solution to dryness.

NOTE: A 600-mL beaker on a Corning Model PC-351 hot plate set at "2" can be left unattended for 15 h (overnight).

9.1.2.4. Add 10 mL of concentrated HNO_3 and heat to boiling. When the sample begins steaming, **CAREFULLY** add 6 drops of 48% HF while swirling the sample. Evaporate to dryness.

CAUTION: HF is extremely hazardous. Wear rubber gloves, eye protection, and a lab coat. Completely clean up all spills and wash thoroughly after using HF. Make all HF transfers in an exhaust fume hood to avoid the toxic fumes.

9.1.2.5. Carefully wash down the sides of the beaker with approximately 10 mL of concentrated HNO_3.

9.1.2.6. While heating the sample, add 30% H_2O_2 by drops to decompose any organic material. Repeated additions of concentrated HNO_3 and H_2O_2 may be required to completely

ash some samples. Wet ashing is complete when the residue is white or very light yellow when dry.

9.1.2.7. Dissolve the residue in approximately 20 mL of concentrated HNO_3, carefully washing down the sides of the beaker.

9.1.2.8. Add 5 mL of concentrated HCl to the beaker and evaporate to approximately 1 mL. Remove the sample from the hot plate and cool.

9.1.2.9. Add 20 mL of 6 M HCl and 1 mL of saturated H_3BO_3 solution to the sample.

9.1.2.10. Cover the beaker with plastic wrap and store until ready for the cation column.

9.1.3. Vegetation dissolution.

9.1.3.1. Samples up to approximately 20 g are dried at 60°C in tared glass beakers until a constant weight is obtained on successive days.

9.1.3.2. Add 20 mL of distilled water to the beaker. Cover with perforated aluminium foil. Ash at 100-200°C for 8 h.

9.1.3.3. Ash at 300°C overnight.

9.1.3.4. Ash at 400°C for 8 h.

9.1.3.5. Ash at 500°C until the sample ash is completely white.

9.1.3.6. Cool and weigh the sample. Record the ash weight.

9.1.3.7. Repeat Steps 9.1.3.5 and 9.1.3.6 until a constant weight is achieved.

NOTE: The entire ash sample is frequently transferred to a 500-mL polyethylene bottle for gamma-emitting radionuclide analysis using Ge(Li) gamma-ray spectroscopy.

9.1.3.8. Dissolve the entire sample in approximately 20 mL of HNO_3. Add 1 mL of ^{243}Am tracer solution before continuing with the dissolution.

9.1.3.9. Heat the sample on a hot plate and add 30% H_2O_2 in small amounts until the sample dries to a clear residue. The color may vary from pure white to deep lilac.

NOTE: Attention to temperature is important, because samples can bump violently if overheated.

9.1.3.10. Dissolve the residue in a mixture of 10 mL of concentrated HNO_3 and 5 mL of concentrated HCl. Evaporate to 1 mL.

9.1.3.11. Remove the sample from the hot plate and cool. Dilute to 10 mL with 6 M HCl. Let the sample stand overnight.

9.1.3.12. Cover the beaker with plastic wrap and store until ready for the cation column.

9.1.4. Tissue dissolution (including bone).

9.1.4.1. Weigh a 10-g aliquot of wet soft tissue or bone, excluding feathers and hide, into a 600-mL glass beaker.

9.1.4.2. Add 1 mL of ^{243}Am tracer to the sample.

9.1.4.3. Wet ash the sample with concentrated HNO_3 and 30% H_2O_2 until a clear or light yellow solution is obtained.

NOTE: Do not use HF because insoluble CaF_2 precipitates are formed.

9.1.4.4. Evaporate the solution until just dry.

9.1.4.5. Continue the procedure for water samples from Step 9.1.2.7 to 9.1.2.10.

9.1.5. Filter dissolution (air particulate, industrial hygiene swipe).

9.1.5.1. Place the air particulate filter into a 30-mL platinum crucible. Add 2 mL of ethanol to the filter. Add 1 mL of ^{242}Am tracer to the wetted filter. Air dry the filter overnight.

9.1.5.2. Record the crucible and sample number.

9.1.5.3. Place the crucible in a cold muffle furnace. Turn the furnace to 500°C and dry ash for 4 h. Turn the furnace off and remove the crucible. Allow the crucible to cool for 1/2 h.

9.1.5.4. Ashing will not be complete if glass fiber filters are used. After cooling, add 5 to 10 mL of concentrated HF a few drops at a time. Cover with a platinum lid.

Under the step time box click on the **0.0 min**. GPM and CDM-1 are not changed. Under ACI the autosampler should be **on**.

Under the step time box click on **0.1 min**. GPM and CDM-1 settings remain unchanged. ACI setting has autosampler **off**.

Under the step time setting now click on **2.1 min**. Under the GPM box, activate the **start and run** option. Under CDM-1, offset for the cell should be **on**. Under ACI, nothing should be activated.

Under the step time settings click on **2.2 min**. Under the GPM box, activate the **start and run** option. Under CDM-1, offset and cell should be **on**. Under ACI, begin sampling should be **on**.

Under the step time settings click on **10.0 min**. GPM should have **start** and **reset** activated. CDM-1 should have offset and cell boxes **on**. ACI should have no settings selected.

All the above settings are the normal settings for the anion procedure. They can be changed if necessary. When all selections are made, click on the **enter button** to enter the settings into the method file. Go to the uppermost left hand corner file box and select the **save** option. Select the **OK** box. Now all the settings are in the anion1 method file.

Go to the uppermost lefthand corner of the Timed Events editor screen and select the **close** option. This will take you back to the AI-450 Method Editor screen.

7.4.5. Under the data processing box select **Detector 1**. Now the Data Processing parameters screen appears. Click on the **integration box**. The peak detection should be: peak width = 10 s, peak threshold = 0.5, area reject = 1000 area counts. Under reference peak, the area reject should be 1000 and the time window percent should be 10. This is the only setting that is likely to be changed after making the initial selections. Click on the **OK** box.

Click on the **data events** box. There are various options which can be added or deleted as needed. The normal events selected are: at 1.20 min force the baseline, void volume treatment for this peak and start peak detection. Select **exit** and click. This takes you back to the Data Processing parameters screen.

Place the cursor on **Calibration** and click. You should be in the Calibration Parameters screen. The following options should be selected: levels = **1** , fit type = **linear**, calibration update = **replace**, standardization = **external**, peak calibration = **area**, defaults are sample volume = **1**, dilution factor = **1** (can be changed by clicking cursor and

typing in value) and unknown response factor = **0**, cal std volume = **1**, default internal standard standard conconcentration in samples = **1**, sample units = **mg/L**. Click on **OK** to return to Data Processing parameters screen.

Click on **components**. The two components of current interest are Cl and SO_4. The normal retention time for Cl is 1.52 min and for SO_4 is 7.02 min. These parameters can change because of varying column conditions. They can be changed by moving the cursor to the appropriate box and double clicking.

Enter the **new value** at the keyboard. After a new value is typed in, click on the **add** box to enter the new value into the file. Percent window should be left at 10%. Ref. Comp. should be 1. This procedure is not currently being used to determine F, Br or NO_3 but their parameters could be set at this point if desired. Click on the **exit** box. This should take you back to the Data Processing parameters screen.

Click on the **OK** box and you are back in the Method Editor screen. Go to the file box and select the **save** file. Click on **OK** to save the file. Go to the uppermost left hand corner of the screen and select **close**. This will take you back to the AI450 Main Method screen.

7.4.6. Select the **Schedule** box by double-clicking on this box. You can now set up the schedule you will use to run your sample set.

Under the file box select **open**. Click on **anion1.sch**. Click on **OK** and the anion1 schedule screen should appear. In box #1 for the sample name, always type **AUTOCAL1**. In AUTOCAL1 your known standard is run and the instrument is automatically calibrated. In box #2 type your **QC number**. The QC will verify that the instrument has been calibrated properly. Type in subsequent **sample numbers**. Check the run with a standard to ensure that the instrument has not drifted. Include 10% repeats and sample spikes. Under the method column be sure to enter **anion1** for all entries. The vol and std columns should all have a value of 1. In the dilution column the appropriate dilution value can be entered.

When the schedule is complete, go to the file box and select the **save** option. Click on **OK** to save. Go to the uppermost left hand box of the screen and **close** the file. You are now back in the Main Menu.

7.4.7. The instrument is now ready to be set up to run the samples. With the cursor, double-click on the **run** box. The anion1 screen should appear. Go to the box in the uppermost left hand corner and select **maximize**. The anion1 run screen now appears. Load a method and schedule into the computer before you begin the actual run. Select and click on the

load box. Select **anion1** method and click. Click twice on the **OK** box. The method selected will now be loaded on the computer and can be verified by the successive blinking lights at the gradient pump board. When lights finish blinking the schedule can be loaded into the computer.

Go back to the **load** option and select **schedule**. Select **anion1** schedule and click on **OK**. Click on **OK** again. The lights will blink again at the gradient pump screen. When the lights are finished blinking you are ready to run the samples.

Go back to the program board on the gradient pump. Place the local/remote switch in the **remote** mode. This will permit the computer to automatically take over the system in the subsequent step.

Go to the **run** box and select the **start** option. Click on **OK**. The sample changer will now be activated and the sample schedule will run to completion. Sample results will be printed out in mg/L. When the sample run is completed, go to the uppermost left hand corner of the screen and select **close**. Click on **OK**. This will return you to the main menu.

7.5. Dionex shutdown.

7.5.1. Shut off gas at the main cylinder.

7.5.2. Return the CDM and GPM to the **LOCAL** mode.

7.5.3. Stop the pump. Pressure should return to zero.

7.5.4. Shut off the He gas to the eluant degas module and shut off the degas module.

7.5.5. Turn **OFF** the He gas to the auto regeneration system and depressurize.

7.5.6 Turn down intensity on CRT.

8. Calculations

8.1. Sample values can be read in mg/L directly from the printout. Make volume corrections as needed.

8.2. Calculate spike recovery using the following equation:

$$\frac{Ss - S}{C} \times 100 = \% \text{ Recovery}$$

where Ss = spiked sample (mg/L),
S = unspiked sample (mg/L), and
C = amount of spike added (mg/L).

9. Source Materials

9.1. Dionex manual.

PH OF SOIL

Analyte: H^+	**Method No.:** EI520
Matrix: Soil	**Sensitivity:** 0.1 pH unit
Procedure: pH electrode	
Effective Date: 06/02/89	**Author:** Eric Nickell Ernest S. Gladney Mary Carol Williams

SAFETY NOTE: Before beginning this procedure, read all of the Material Safety Data Sheets for the chemicals listed in Sec. 6. Read Sec. 4.3 of the EM-9 Safety Manual for information on personal protective clothing and equipment.

1. Principle of Method

1.1. Hydronium ions in dried soil samples are solvated using repeated agitation.

1.2. $[H^+]$ is quantified with a combined pH electrode.

2. Sensitivity

2.1. Sensitivity is 0.1 pH unit.

3. Accuracy and Precision

3.1. Precision is ±0.1 pH unit.

4. Interferences

4.1. Samples with very low or very high pH may give incorrect readings on the meter. For samples with a true pH >10, the measured pH may be incorrectly low. This error can be minimized by using a low-sodium-error electrode. Strong acid solutions, with a true pH <1, may give incorrectly high pH measurements.

4.2. Temperature fluctuations will cause measurement errors.

4.3. Errors will occur when the electrodes become coated. If an electrode becomes coated with an oily material that will not rinse free, the electrode can either be cleaned with an ultrasonic bath or washed with detergent, rinsed several times with water, placed briefly in 1:10 HCl so that the lower third of the electrode is submerged, and thoroughly rinsed with water.

5. Collection and Storage of Samples

5.1. Samples must be dried and either ground or sieved for proper soil particle washing by distilled water.

5.2. Samples should be analyzed as soon after collection as possoble.

6. Apparatus

6.1. pH meter: portable, Leeds and Northrup (Cat. no. 7417) or equivalent.

6.2. Centrifuge tubes: 50-mL plastic, disposable.

6.3. Combined pH electrode: rugged construction.

6.4. Analytical balance.

6.5. Corner of styrofoam centrifuge tube holder cut to fit balance pan.

6.6. Spatula.

6.7. Ringstand with small clamp.

6.8. Wash bottle and waste beaker.

6.9. Thermometer: range 10-30°C.

6.10. Tubing for air line.

6.11. Volumetric flasks: 2-L and 1-L.

7. Reagents

7.1. Stock buffer solutions for electrode calibration. The suggested pH range is 4.0-11.0.

7.2. Distilled, deionized water.

7.3. Primary standard buffer salts. Available from the National Institute of Standards and Technology (NIST) for use where extreme accuracy is necessary. Preparation of reference solutions from these salts requires special precautions and handling, such as low-conductivity water, drying ovens, and carbon-dioxide-free purge gas.

7.4. Secondary standard buffers. Prepared from NIST salts or purchased as solutions from commercial vendors. These commercially available solutions, validated by comparison with NIST standards, are recommended for routine use.

7.5. Calcium chloride stock solution (3.6 M). Dissolve 1059 g of $CaCl_2 \cdot 2H_2O$ in distilled water in a 2-L volumetric flask. Cool the solution, dilute it to volume with distilled water, and mix well.

7.6. Calcium chloride (0.01 M). Dilute 5 mL of stock 3.6 M $CaCl_2$ to 1.8 L with distilled water. If the pH of this solution is not between 5.0 and 6.5, adjust the pH by adding a little $Ca(OH)_2$ or HCl.

8. Calibration and Standards

8.1. Calibrate the meter within the pH range of the soils to be tested. Soil pH can be estimated by its color and texture, or with knowledge of the geology and botany of the collection area. Group the soil types so that they run under the same calibration.

8.2. Because of the wide variety of pH meters and accessories, detailed operating procedures cannot be incorporated into this method. Each analyst must be acquainted with the operation of each system and familiar with all instrument functions. Special attention to care of the electrodes is recommended.

8.3. Each instrument/electrode system must be calibrated at least two points that bracket the expected pH of the samples and are approximately three pH units or more apart. Repeat adjustments on successive portions of the two buffer solutions until readings are within 0.05 pH units of the buffer solution value.

8.4. Recalibrate the meter, measuring buffer solutions after every ten samples, when subsequent soil pHs change by two units or more, and at the startup each day.

9. Procedure

9.1. Weigh 10.0 g of soil into a centrifuge tube. When the sample amount is limited, 5.0 g will barely be adequate.

9.2. Bulk sample preparation.

9.2.1. Add an equal weight of distilled, deionized water to the tube and cap immediately.

9.2.2. Shake the tube several times. Shake three more times at 10-min intervals.

9.2.3. Let the samples settle for 1 h.

9.2.4. The suggested batch size is five samples prepared at staggered times.

9.3. Cleaning the electrode.

9.3.1. Wash the electrode body and membrane with distilled, deionized water.

9.3.2. Wipe the electrode body dry and air dry the membrane.

9.4. Compensating for sample temperature.

9.4.1. Wash and dry the thermometer.

9.4.2. Determine the sample temperature.

9.4.3. Adjust the pH meter **TEMPERATURE** knob to the proper setting.

9.5. Determining the pH.

9.5.1. Set the centrifuge tube in a styrofoam holder. Lower the clamped electrode into the water layer. Ensure that the liquid is in contact with the liquid junction of the electrode. The electrode membrane may enter the soil layer.

9.5.2. Turn the pH meter from **STANDBY** to **MEASURE**.

9.5.3. Wait exactly 3 min.

9.5.4. Read the pH from the scale, rounding to the nearest tenth. Record the pH in the notebook.

9.5.5. Return the meter to **STANDBY**.

9.6. Sample preparation and pH measurement of calcareous soils.

9.6.1. Add 20 mL of 0.01 M $CaCl_2$ (Step 7.6) solution to 10 g of soil in a 50-mL beaker and stir the suspension several times during the next 30 min.

9.6.2. Let the soil suspension stand for about 30 min to allow most of the suspended clay to settle from the suspension.

9.6.3. Adjust the electrodes in the clamps of the electrode holder so that, when lowered into the beaker, the glass electrode will be immersed well into the partly settled suspension and the calomel electrode will be immersed just deep enough into the clear supernatant solution to establish a good electrical contact through the ground-glass joint or the fiber-capillary hole. Insert the electrode into the sample solution in this manner.

9.6.4. If the sample temperature differs by more than 2°C from the buffer solution, the measured pH values must be corrected.

10. Operation of Equipment

10.1. Consult the pH meter and combined electrode manuals for proper maintenance and care of both.

11. Calculation

11.1. No calculations are necessary. Report as pH in units with a comment of either "soil in water" or "soil in $CaCl_2$."

12. Source Materials

12.1. Michael Peech, Hydrogen-ion Activity in Chemical and Microbiological Properties, part 2, *Methods of Soil Analysis*, American Society of Agronomy, Madison, Wis., pp. 922-923.

12.2. L.P. Gouch, R.C. Severson, and H.T. Shacklette, "Element Concentrations in Soils and other Superficial Materials of Alaska," USGS Professional Paper 1458, U.S. Government Printing Office, 1988.

12.3. EPA SW-846 Method 9045.

ARSENIC, ANTIMONY, TUNGSTEN, and MOLYBDENUM IN SILICATES—RENA

Analyte: As, Sb, W, Mo	**Method No.:** EI630
Matrix: Silicates	**Minimum Detectable Activity:** As 5 ng/g, W 10 ng/g, Sb 10 ng/g, Mo 50 ng/g
Procedure: Radiochemical epithermal neutron activation	**Accuracy and Precision:** 95% ± 10%
Effective Date: 08/01/88 to 09/01/90	**Author:** Ernest S. Gladney Kenneth W. Sims

SAFETY NOTE: Before beginning this procedure, read all of the Material Safety Data Sheets for the chemicals listed in Sec. 7. Read Sec. 4.3 of the EM-9 Safety Manual for information on personal protective clothing and equipment.

1. Principle of Method

1.1. Silicate samples are irradiated with epithermal neutrons.

1.2. Irradiated samples are fused and dissolved and As, Sb, W, and Mo are separated by inorganic ion exchange on Al_2O_3.

1.3. The separated As, Sb, W, and Mo are quantified using high-resolution gamma-ray spectrometry.

2. Sensitivity

2.1. Approximately 5 ng/g of As, 10 ng/g of Sb, 10 ng/g of W, and 50 ng/g of Mo can be detected. Sensitivity is a function of sample size. Sensitivity for Mo is also a function of the amount of P and U in the sample, since both these elements provide a positive interference.

3. Accuracy and Precision

3.1. Replicate analyses of the NIST SRM 1633a yield results that are within 95% of the certified (As, Sb) and consensus (W, Mo) values. Based upon the standard deviation of the mean of these analyses, this procedure has a precision of ± 4% for As and Sb, ± 6% for Mo, and ± 10% for W.

3.2. The results in Table I are typical for replicate As, Sb, W, and Mo determinations on several NIST and USGS reference materials.

4. Interferences

4.1. The 561-keV gamma-ray of ^{76}As interferes with the measured ^{122}Sb 564-keV gamma ray and must be corrected for. This correction is approximately 2% if the sample is allowed to decay for 72 h before measuring Sb (^{122}Sb $t_{1/2}$ = 2.72 d) since approximately 90% of the As activity will have decayed (^{76}As $t_{1/2}$ = 1.10 d).

4.2. Phosphorus is also retained on the column and the 1.7-MeV β^- of ^{32}P increases the background in the low ion energy gamma-ray spectra, which interferes with the measurement of the Mo 140.5-keV gamma-ray. Since the neutron cross section of ^{31}P follows the 1/v law (Steinnes), using epithermal neutrons for the irradiations minimizes this interference.

4.3 The ^{235}U (n,f) ^{99}Mo contribution to the measured Mo concentration must also be corrected for. Once again the fission of ^{235}U is greatly suppressed with epithermal neutrons, substantially reducing the magnitude of this correction.

5. Collection and Storage of Samples

5.1. Grind samples so that a homogenous blend is produced. To avoid contamination, particularly for tungsten, samples **must not** be ground in a tungsten-carbide mill.

5.2. Chemically separate and count the irradiated sample within 24 h of irradiation since ^{76}As and ^{187}W have short half lives (1.10 and 0.996 days, respectively).

6. Apparatus

6.1. Nuclear reactor: equipped with an epithermal neutron irradiation facility. A boron-filtered flux is preferred, but cadmium filtering will be sufficient.

6.2. Irradiation vial: size 0.0 snap-cap polyethylene vial and polyethylene rabbit.

6.3. Sample grinder: alumina mill for shatter box, Spex 8505.

6.4. Furnaces: two Lindberg high-temperature box furnaces.

6.5. Digestion vessels: 50-mL nickel crucibles, Spex.

6.6. Ion-exchange columns: borosilicate low-pressure ion-exchange columns 15 cm long by 1.0 cm i.d., fitted with 500-mL reservoirs, Bio-rad.

6.7. Counting vials: 25-mL, screw-cap polyethylene scintillation vials, Packard.

6.8. Beakers: 500-mL, glass.

6.9. Watch Glass: 10-cm, glass.

6.10. Gamma-ray spectrometer: high-resolution intrinsic Ge detector with preamp, linear amplifier, analog-to-digital converter, and 4096-channel pulse height analyzer.

6.11. Filter paper: 24-mm, glass-fiber filter paper, Whatman.

6.12. Filter paper: 4.25-cm, Whatman No. 2.

7. Reagents

7.1. Hydrochloric acid (0.5 N).

7.2. Aluminum oxide. 80 mesh, acidified, chromatographic grade.

7.3. Sodium hydroxide (reagent-grade, pellets).

7.4. Sodium peroxide (reagent-grade, granular).

7.5. Standard solutions (1000 μg/mL). Aqueous As, Mo, Sb, and W standards for plasma emission spectrometry, Spex.

7.6. Standard solution (100 μg/mL). Gold standard for plasma emission spectrometry, Spex.

8. Calibration and Standards

8.1. Combine 1 mL each of 1000 μg/mL Spex As, Sb, W, and Mo standard solutions. Pipette 50 μL of this mixed standard solution onto Whatman glass-fiber filter papers; this produces a concentration of 12.5 μg for each element. Air-dry, fold, and insert the filter papers into snap-cap polyethylene vials and irradiate along with the samples.

8.2. Include flux monitors in the second position of each rabbit in order to normalize the activities of standards and sample fractions to the same neutron dosage. Prepare monitors by pipetting 50 μL of 100 μg/mL gold solution onto Whatman No. 2 filter papers, air-dry, fold, and insert into the snap-cap polyethylene vials.

9. Procedure

9.1. Grind samples to approximately minus 80 mesh in a shatter-box mill.

9.2. Encapsulate approximately 300 mg of each sample in snap-cap polyethylene vials. Place this sample fraction in a polyethylene rabbit and irradiate for 40-80 min in the boron-lined epithermal neutron port of the Omega West Reactor.

9.3. Radiochemical separation.

9.3.1. Column preparation. Slurry 5-6 gm of Al_2O_3 with 0.5 N HCl and pour into the glass columns, forming a bed approximately 6 cm high. Precondition columns by passing 30 mL of 0.5 N HCl at maximum flow rate. Since columns can be kept indefinitely if moist, the required number of columns may be prepared at the beginning of the day.

9.3.2. Sample fusion. Within 3-4 h following irradiation, combine the sample with 5 g of Na_2O_2 and 2 g of NaOH in a nickel crucible and cover with a nickel lid. Preheat this mixture in a high-temperature furnace at 200°C for 5 min. Fuse the sample in another high-temperature furnace at 600-700°C for 15 min.

9.3.3. Fusion melt dissolution. Allow the resulting fusion melt to solidify for approximately 2 min). Place the crucible in a 500-mL glass beaker and cover with a watch glass. Using polyethylene squeeze bottles, leach the fusion cake with 100 mL of H_2O and dissolve it with 500 mL of 0.5 N HCl. All dissolved melts have a pronounced green color due to the Ni extracted from crucibles during fusion. Be **extremely** careful about the amount and concentration of acid used, as this can seriously compromise the retention of these elements on the Al_2O_3 column.

9.3.4. Column separation. The solution (<0.5 N HCl) containing the dissolved sample is passed through the ion-exchange column at a **maximum** flow rate of 2 mL/min. The ion-exchange columns will often plug up during separation because of reprecipitation of NiO (black) or hydrated silica (white and gelatinous). If this occurs, stir the tops of the columns with a glass rod to maintain flow.

9.3.5. Wash the resin into the vial with H_2O.

9.4. Gamma-ray spectroscopy. Count the resins on HPGe detectors. Two counts are employed to take advantage of the relative half lives and activities of the measured isotopes (See Table II).

10. Operation of Equipment

10.1. See the operation manual for the gamma-ray spectrometer (HPGe detector).

11. Calculation

11.1. The counting efficiency of the detector is calculated using the following equation.

$$E = \frac{\left(\frac{Cs}{Ts} - \frac{Cb}{Tb}\right) e^{\lambda(t_2 - t_1)}}{Ws} ,$$

where E = efficiency (counts/s per μL),
Cs = gross counts for the standard,
Ts = counting time for the standard,
Cb = gross counts for the background,
Tb = counting time for the background (s),
Ws = weight of element in standard (g),
λ = decay constant for isotope measured,
t_2 = time counting, and
t_1 = time at end of irradiation.

NOTE: $e^{\lambda(t_2 - t_1)}$ takes into account the decay of the sample since irradiation.

11.2. The standard deviation of the efficiency is given by:

$$[X] = \frac{\left(\frac{Cx}{Tx} - \frac{Cb}{Tb}\right) e^{\lambda(t_2 - t_1)}}{E \times W} ,$$

where [X] = sample concentration,
Cx = gross counts of sample,
Tx = count time of sample,
Cb = gross counts of background,
Tb = count time of background,
E = counting efficiency from Step 11.1,
W = weight of sample,
λ = decay constant for the measured isotope,
t_2 = time of counting, and
t_1 = time at the end of irradiation.

11.3. The standard deviation of the calculated sample concentration is given by:

$$Sx = |X| \times \frac{\sqrt{Cs - Cb}}{Cx - Cb} ,$$

where Sx = uncertainty of sample concentration,
X = sample concentration,
Cx = gross counts of sample, and
Cb = gross counts of background.

11.4. Background standard deviation is given by:

$$SB = B \times \frac{\sqrt{Cb}}{Cb} ,$$

where SB = uncertainty of background activity,
Cb = gross counts of background, and
B = background count rate (Cb/Cb).

11.4. Propagated uncertainty of sample concentration is calculated as follows:

$$Ux = X \sqrt{(SE)^2 + (SX)^2 + (SB)^2 + (SS)^2} ,$$

where UX = the propagated uncertainty of the analyte concentration,
SE = the standard deviation of the counting efficiency,
SB = the standard deviation of the background, and
SS = calculated uncertainty of the standard solution.

12. Source Materials

12.1. K. W. Sims and E. S. Gladney, "Determination of Arsenic, Antimony, Tungsten and Molybdenum in Silicate Materials by Epithermal Neutron Activation and Inorganic Ion Exchange," *Analytical Chemical Acta* (in press).

12.2. E. S. Gladney, "Determination of Arsenic, Antimony, Molybdenum, Thorium and Tungsten in Silicates by Thermal Neutron Activation and Inorganic Ion Exchange," *Anal. Lett.*, **5**, 429-435 (1978).

12.3. F. Girardi, R. Pietra, and E. Sabbioni, "Radiochemical Separations by Retention on Ionic Precipitate Absorption Tests on Eleven Materials," *J. Radioanal. Chem.* **5**, 141-147 (1970).

12.4. K. W. Sims, "Chemical Fractionation During Formation of the Earth's Core and Continental Crust: Clues from As, Sb, W and Mo," unpublished Master's thesis, University of New Mexico (1990).

12.5. E. S. Gladney, D. R. Perrin, J. P. Balagna, and C. L. Warner, "Evaluation of a Boron-filtered Epithermal Neutron Irradiation Facility," *Anal. Chem.* **52**, 2128-2132 (1980).

12.6. E. Steinnes, "Epithermal Neutron Activation Analysis of Geological Material," In *Activation Analysis in Geochemistry and Cosmochemistry* (eds., A. Brunfelt and E. Steinnes), Universitetesforlaget, Oslo, Norway, pp. 113-129 (1971).

12.7. E. S. Gladney, C. E. Burns, and I. Roelandts, "1982 Compilation of Elemental Concentration in Eleven United States Geological Survey Rock Standards," *Geostandards Newletter* 7, 3-226 (1983).

12.8 E. S. Gladney and I. Roelandts, "1987 Compilation of Elemental Concentration Data for USGS BHVO-1, MAG-1, QLO-1 RGM-1, SCo-1, SDC-1, SGR-1, and STM-1," *Geostandards Newletter* **12**, 253-367 (1988).

12.9 E. S. Gladney, B. T. O'Malley, I. Roelandts, and T. E. Gills, "Compilation of Elemental Concentration Data for NBS Biological, Geological and Environmental Standard Reference Materials," *National Bureau of Standards Special Publication 260-111* (1987).

TABLE I. ANALYSIS OF REFERENCE MATERIALS

Reference Materials	As (μg/g)						Sb (μg/g)					
	EI630			Cert. Value			EI630			Cert. Value		
USGS AGV-1	0.98	±	0.03	0.84	±	0.27	4.0	±	0.3	4.4	±	0.4
USGS RGM-1	3.10	±	0.08	3.00	±	0.40	1.30	±	0.02	1.26	±	0.07
USGS BHVO-1	0.54	±	0.05	0.40	±	0.22	0.17	±	0.01	0.16	±	0.04
USGS BCR-1	0.57	±	0.03	0.64	±	0.14	0.58	±	0.04	0.62	±	0.10
NBS 1633a	151	±	6	145	±	15	7.0	±	0.3	7.0	±	0.5
	W (μg/g)						Mo (μg/g)					
	EI630			Cert. Value			EI630			Cert. Value		
USGS AGV-1	0.7	±	0.1	0.53	±	0.09	2.3	±	0.4	3	±	1
USGS RGM-1	1.49	±	0.02	1.50	±	0.18	2.6	±	0.2	2.3	±	0.3
USGS BHVO-1	0.22	±	0.02	0.27	±	0.06	1.04	±	0.08	1.02	±	0.10
USGS BCR-1	0.37	±	0.06	0.40	±	0.09	1.6	±	0.2	1.2	±	0.2
NBS 1633a	5.5	±	0.6	5.7	±	0.7	29	±	2	30	±	3

TABLE II. NUCLEAR PARAMETERS FOR AS, SB, W, AND MO.

Element	Stable Isotope	Isotopic Abundance (%)	σ_o (barns)	$I=0.44\sigma_o$	Radionuclide	$T_{1/2}$ (days)	Energy (keV)	Branching Ratio (%)
As	^{75}As	100	4.3	38	^{76}As	1.10	559.1	44.6
Sb	^{121}Sb	57.3	6.2	169	^{122}Sb	2.72	564.1	63.0
	^{123}Sb	43.7	3.4	183	^{124}Sb	60.20	1691.0	45.7
W	^{186}W	28.6	37	500	^{187}W	0.996	685.7	32.0
Mo	^{98}Mo	24.13	0.14	7.1	$^{99}Mo \rightarrow \beta \rightarrow {}^{99m}Tc$	2.75-0.25	140.4	81.0

MERCURY IN ENVIRONMENTAL MATERIALS – COLD VAPOR GOLD FILM ANALYZER

Analyte: Mercury	**Method No.:** EI730
Matrix: Water, soils, sediments	**Minimum Detectable Concentration:** 3 ng/g in solid, 0.05 ng/mL in water
Procedure: Cold vapor gold film resistance analysis	
Effective Date: 10/01/87	**Author:** Ernest S. Gladney Michael G. Bell

SAFETY NOTE: Before beginning this procedure, read all of the Material Safety Data Sheets for the chemicals listed in Sec. 7. Read Sec. 4.3 of the EM-9 Safety Manual for information on personal protective clothing and equipment.

1. Principle of Method

1.1. Leach mercury from soils and sediments using a simple cold-acid procedure. Waters may be run directly without additional processing.

1.2. Reduce Hg^+ in solution to Hg with $SnCl_2$.

1.3. Purge Hg from solution with a stream of air and almagamate it on gold film contained within the analyzer system.

1.4. Determine the Hg concentration by measuring the change in electrical resistance of the gold film.

2. Sensitivity

2.1. Approximately 1 ng of Hg can be detected from a 30-mL sample solution, yielding a detection limit of 0.05 ng/mL in water and 3-5 ng/g in solid samples. No system blank has been observed.

3. Accuracy and Precision

3.1. The following results have been obtained in 25-mL aliquots of NIST SRM 1642B.

CVGFA (ng/mL)	Certified Value (ng/mL)
1.62 ± 0.10	1.49 ± 0.06

3.2. In HNO_3-HCl extracts of 1-g samples of soil and sediment reference materials the following results have been obtained (ng/g):

Agency	Material	CVGFA mean ± SD	(n)	Certified or consensus value mean ± SD
NIST	1633A	133 ± 14	9	160 ± 10
	1646	65 ± 16	10	63 ± 12
	8032	69 ± 3	8	57 ± 4
	8033	110 ± 10	3	104 ± 12
CCRMP	SO-1	25 ± 5	54	21 ± 3
	SO-2	80	2	82 ± 12
	SO-3	17 ± 4	5	16 ± 5
	SO-4	40 ± 8	5	29 ± 4
USGS	GXR-1	3900 ± 200	4	4000 ± 300
	GXR-2	2800 ± 100	4	2700 ± 600
	GXR-3	350 ± 30	4	340 ± 40
	GXR-5	180 ± 30	4	160 ± 10
	GXR-6	73 ± 5	7	70 ± 20

3.3. A series of standard additions was run with NIST SRM 1645, a Chicago River sediment. This sediment is very oily and should present some of the most difficult matrix problems. The following spike recoveries were obtained:

Spike added (ng)	Spike recovered (ng)	(n)
5.0	5.7 ± 0.4	3
10.0	10.2 ± 0.2	4
15.0	15.1 ± 0.4	3

4. Interferences

4.1. Oxidizing agents in the sample retard the reduction and evolution of Hg.

4.2. Serious problems have been observed with what we believe to be organic acids that are extracted from soil and sediment samples along with the Hg. These samples are highly colored and foam extensively during the purging operation, and transfer material to the gold film, yielding consistently high results. At present, dilution and reanalysis of these samples seems to be the only alternative, with accompanying loss in detection limits.

4.3. High concentrations of purgeable halogens (e.g., from HCl) can cause rapid deteoriation of the gold film.

5. Collection and Storage of Samples

5.1. Collect water samples in acid-washed polyethylene bottles to which 10 mL of concentrated HNO_3 containing 20 mg of $K_2Cr_2O_7$ is added before sample introduction. Run samples as soon as possible after collection. Discard after one week.

5.2. Collect soil and sediment samples in acid-washed glass or polyethylene containers. Do NOT dry the samples to be leached for Hg. Determine the water content on separate aliquots of sample and correct the final result to dry-weight basis if desired. Freeze samples for long-term storage.

6. Apparatus

6.1. Gold film analyzer: Jerome, Model 511.

6.2. Purge kit for gold film analyzer.

6.3. Bottles: 500-mL, polyethylene.

6.4. Pipettes: 50-, 100-, 250-, 500-, and 1000-μL, with disposable tips.

6.5. Pipette: 5-mL, adjustable, with disposable tip.

6.6. Beakers: 150- and 4000-mL, Pyrex.

6.7. Flasks: 100- and 500-mL, volumetric.

6.8. Funnels: filtering, 60° glass, short stem.

6.9. Funnel rack: adjustable, 6-funnel capacity.

6.10. Wash bottles: 500-mL, polyethylene.

6.11. Graduated cylinder: 25-mL, glass.

6.12. Analytical balance: top loading, 100-g capacity.

6.13. Ring stand with adjustable clamp.

6.14. Filter paper: Whatman No. 41, 15-cm diam.

7. Reagents

7.1. Add 0.5 mL of water to 20 mg of $K_2Cr_2O_7$. Slurry and add 1 mL of concentrated HNO_3. Stir to dissolve the $K_2Cr_2O_7$ and add 9 mL of concentrated HNO_3.

7.2. Stannous chloride (10% solution). Dissolve 9 g of $SnCl_2$ in 87 mL of mercury-free distilled water and add 3.0 mL of concentrated HCl.

7.3. Hydrochloric acid (concentrated, mercury-free).

7.4. Nitric acid (concentrated, mercury-free).

7.5. Distilled water (mercury-free).

7.6. 20% HNO_3 • 1% HCl. Add 100 mL of concentrated HNO_3 and 1.0 mL of concentrated HCl to 400 mL mercury-free distilled water in a 500-mL flask.

7.7. Mercury standard solution, (1000 μg/mL) Spex Industries, Edison, N.J.

8. Calibration and Standards

8.1. Prepare secondary Hg standards of 10 μg/g and 10 ng/g.

8.1.1. Add 1.0 mL of the 1000 μg/g primary standard solution to approximately 50 mL of 20% HNO_3 • 1% HCL solution in a 100-mL volumetric flask. Dilute to volume with 20% HNO_3 • 1% HCl. Prepare fresh daily. This standard is 10 μg/g Hg.

8.1.2. Add 0.10 mL of the 10 μg/g secondary standard solution to approximately 50 mL of 20% HNO_3 • 1% HCL solution in a 100-mL volumetric flask. Dilute to volume with 20% HNO_3 • 1% HCl. Make fresh daily. This standard is 10 ng/g Hg.

8.2. Establish a calibration curve by analyzing 30-mL aliquots of the 20% HNO_3 • 1% HCl acid mixture with 0, 0.25, 0.5, 1.0, and 2.5 mL of the 10 ng/g secondary standard added.

8.3. Run certified reference materials with each batch of samples.

8.4. For new or unusual samples, run standard additions to their leach solutions.

9. Procedure

9.1. Glassware cleaning.

9.1.1. Successful mercury analysis by any procedure requires rigorous contamination control. All glassware must be soaked in 50% HNO_3 overnight and rinsed with mercury-free distilled water just before use.

9.1.2. The mercury evolution glassware from the gold film apparatus is also soaked in 50% HNO_3 overnight and washed with distilled water between samples.

NOTE: A more important problem is thorough removal of $SnCl_2$ residue before introduction of the next sample. We have observed no Hg cross-contamination in this apparatus between samples.

9.2. Soil and sediment leaching procedure.

9.2.1. Weigh 1.0 g of sample into a 150-mL acid-cleaned Pyrex beaker.

9.2.2. Add 20 mL of concentrated HNO_3 and 1 mL of concentrated HCl to the sample and swirl carefully to ensure complete wetting.

9.2.3. Let sample stand for 15-30 min with occasional swirling.

9.2.4. During the cold acid leach, set up a filter stand with acid-washed glass funnels. Fold a 15-cm Whatman No. 41 filter paper to fit the funnels and wet the paper. Place a 100-mL volumetric flask below each funnel to collect the leaching filtrate.

9.2.5. Wash the sides of the beakers with approximately 20 mL of distilled water at the end of the leaching period.

9.2.6. Filter the leach solution. Wash the entire contents of the beaker into the funnel. Rinse the beaker carefully and add this rinse to the funnel.

9.2.7. After filtering, dilute each filtrate to 100 mL with distilled water. Cap the flasks and mix well. The leach solution is now ready for mercury analysis.

9.3. Cold vapor gold film analysis.

9.3.1. The basic setup of the apparatus is shown in Fig. 1.

9.3.2. At the beginning of each day, or whenever the Model 511 indicates that the gold film is saturated, bake out the film using the film heat procedure. Replace the purging apparatus on the inlet port of the Model 511 with a "Zero Air Filter" and depress the **FILM HEAT** button. The bakeout cycle lasts 15 min. At the conclusion of the bakeout, depress and hold the **SENSOR STATUS** button and adjust the **BRIDGE BALANCE** with the special tool until a reading of 5 is displayed.

9.3.3. Measure a 30-mL aliquot of a water sample into the reaction vessel of the analyzer. For leach samples, use only 20 mL if the sample is relatively clear. For highly colored samples (intense straw or yellow color from organic compounds that have co-extracted), 10 mL or less may be as much sample as the purging system can handle without foaming becoming a problem. Experience will help dictate the best starting volumes. Dilute contents of reaction vessel to 20 mL with 20% HNO_3 • 1% HCl solution.

9.3.4. Clamp the reaction vessel in the ring stand, insert the purging apparatus, and turn the combined unit to an angle of 45°. This helps to minimize foaming.

9.3.5. Draw approximately 1.5 mL of $SnCl_2$ solution into a syringe. Start the purging pump in the Model 511 by pressing the **SAMPLE START** button. Immediately inject the $SnCl_2$ solution into the purging apparatus through the rubber septum. The reducing agent will be immediately drawn into the reaction vessel.

9.3.6. The purging action will continue for 2 min, at which time the Model 511 stops and displays the gold film resistance reading. Record the sample volume and resistance reading in the Laboratory notebook.

9.3.7. Remove the purging apparatus from the reaction vessel. Rinse the purging section throughly with distilled water, especially the interior of the purge tube, to remove all traces of the previous sample and the $SnCl_2$ reducing solution. Rinse the reaction vessel throughly with distilled water and discard all rinse solution.

9.3.8. Check the degree of saturation of the gold film by depressing and holding the **SENSOR STATUS** button. Note the degree of saturation and release the button. If the film is more than 95% saturated, return to Step 9.2.2. If the film saturation reading is less than 95%, return to Step 9.2.3 to begin the next sample.

10. Operation of Equipment

10.1. Refer to the Jerome Instrument Co. manual for the Model 511.

11. Calculations

11.1. Run the Hg standard solutions described in Step 8.2 along with the samples.

11.2. Construct a standard curve by plotting the Model 511 readout versus total nanograms of Hg in the reaction vessel.

11.3. Read the total mercury content of the sample from the standard curve.

11.4. Calculate the mercury concentration in the original sample.

11.4.1. Solids.

$$Hg = \frac{A \times B}{C \times W}$$

where Hg = concentration of mercury in original sample (ng/g),
A = total Hg from standard curve (ng).
B = total sample leachate volume (mL),
C = volume of sample in reaction vessel (mL), and
W = weight of solid sample leached (g).

11.4.2. Waters.

$$Hg = \frac{A \times 1000}{C}$$

where Hg = concentration of mercury in original sample (ng/L),
A = total Hg from standard curve (ng), and
C = volume of liquid sample in reaction vessel (mL).

12. Source Materials

12.1. A. Mudroch and E. Kokotich, "Determination of Mercury in Lake Sediments using a Gold Film Mercury Analyzer," *Analyst* **112**, 709-710 (1987).

12.2. E. S. Gladney, J. W. Owens, and D. R. Perrin, "The Determination of Mercury in Environmental Materials," Los Alamos Scientific Laboratory report LA-7865-MS (1979).

12.3. R. V. Coyne and J. A. Collins, "Loss of Mercury from Water During Storage," *Anal. Chem.* **44**, 1093-1096 (1972).

12.4. "Model 511 Gold Film Mercury Analyzer," Jerome Instrument Corporation, Jerome, Ariz., Revised 6/86.

12.5. E. S. Gladney and J. W. Owens, "Determination of Mercury by Carrier Free Combustion Separation and Flameless Atomic Absorption Spectrometry," *Analytica Chimica Acta* **90**, 271-274 (1977).

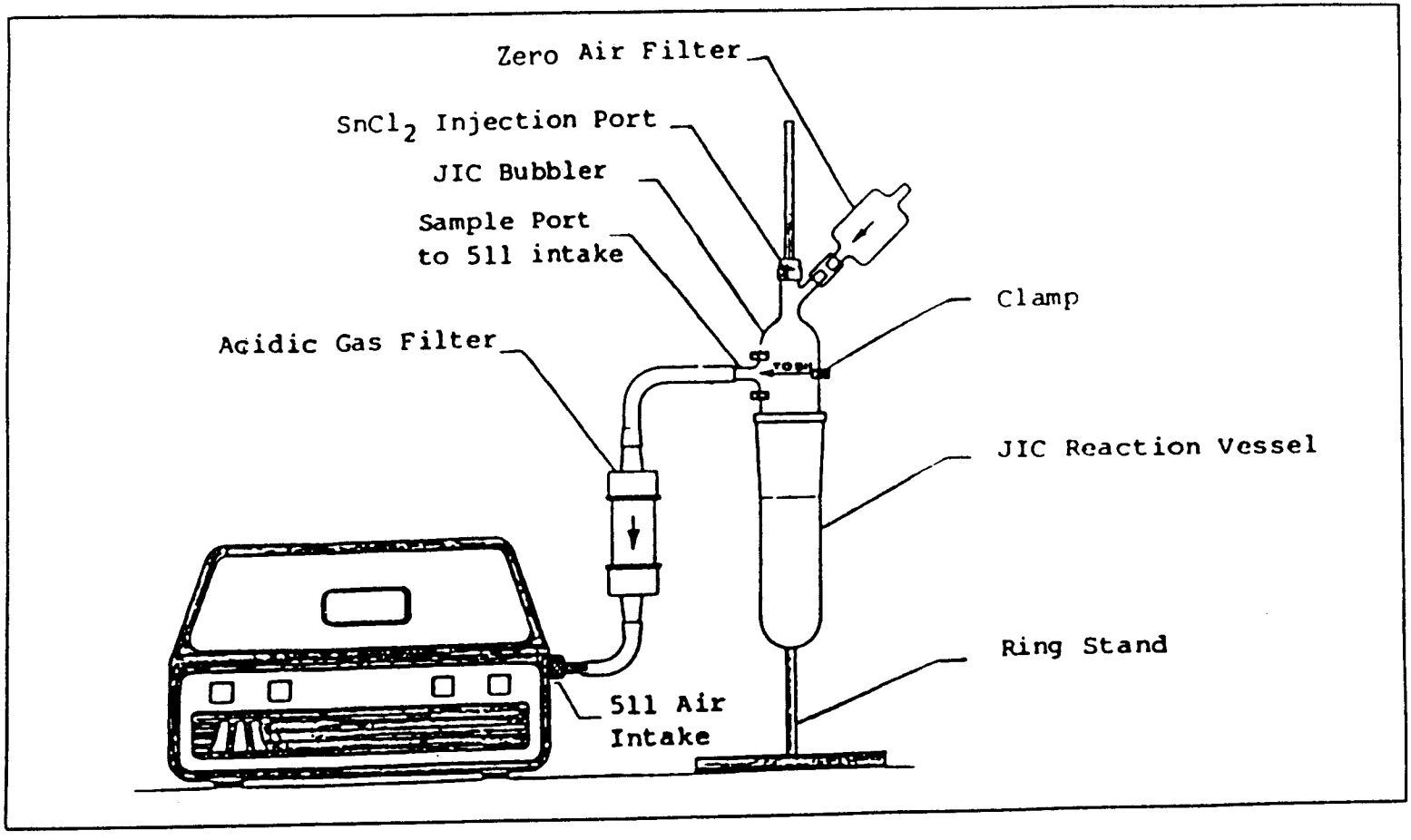

Fig. 1. Reaction apparatus set-up.

SAMPLE PREPARATION FOR SPECTROCHEMICAL ANALYSES OF TOTAL RECOVERABLE ELEMENTS (EPA METHOD 200.2)

Analyte: Trace metals	**Method No.:** EI735
Matrix: Various	
Effective Date: 01/01/91	**Author:** Mary Carol Williams

SAFETY NOTE: Before beginning this procedure, read all of the Material Safety Data Sheets for the chemicals listed in Sec. 7. Read Sec. 4.3 of the EM-9 Safety Manual for information on personal protective clothing and equipment.

1. Principle of Method

1.1. This method provides sample preparation procedures for the determination of total recoverable elements in ground waters, surface waters, drinking water supplies, waste waters, sediments, sludges, and solid waste samples, and is applicable for the following elements:

Analyte		Chemical Abstracts Services Registry Numbers
Aluminum	(Al)	7429-90-5
Antimony	(Sb)	7440-36-0
Arsenic	(As)	7440-38-2
Barium	(Ba)	7440-39-3
Beryllium	(Be)	7440-41-7
Cadmium	(Cd)	7440-43-9
Calcium	(Ca)	7440-70-2
Chromium	(Cr)	7440-47-3
Cobalt	(Co)	7440-48-4
Copper	(Cu)	7440-50-8
Iron	(Fe)	7439-89-6
Lead	(Pb)	7439-92-1
Lithium	(Li)	7439-93-2
Magnesium	(Mg)	7439-95-4

Analyte		Chemical Abstracts Services Registry Numbers
Aluminum	(Al)	7429-90-5
Manganese	(Mn)	7439-96-5
Molybdenum	(Mo)	7439-98-7
Nickel	(Ni)	7440-02-0
Phosphorus	(P)	7723-14-0
Potassium	(K)	7440-09-7
Selenium	(Se)	7782-49-2
Silica	(SiO_2)	7631-86-9
Silver	(Ag)	7440-22-4
Sodium	(Na)	7440-23-5
Strontium	(Sr)	7440-24-6
Thallium	(Tl)	7440-28-0
Thorium	(Th)	7440-29-1
Uranium	(U)	7440-61-1
Vanadium	(V)	7440-62-2
Zinc	(Zn)	7440-66-6

1.2. Samples prepared by this method can be analyzed by (1) inductively coupled plasma atomic emission spectrometry (ICPAES), Method 200.7, (2) inductively coupled plasma mass spectrometry (ICPMS), Method 200.8, and (3) direct aspiration flame atomic absorption (FAA) using the 200-series methodology given in "Methods for Chemical Analysis of Water and Wastes - EPA 600/4-79-020, March 1983." Samples may also be analyzed by the stabilized temperature platform furnace atomic absorption (ETVAA) technique. See the above analytical methodology for selection of the appropriate method for the determination of a specific analyte.

1.3. This method is suitable for the preparation of aqueous samples containing silver concentrations up to 0.2 mg/L. For the analysis of waste-water samples containing higher concentrations of silver, prepare succeeding smaller, well-mixed aliquots until the analysis solution contains <0.2 mg/L silver.

1.4. Solid and aqueous samples are prepared in a similar manner for analysis. Metals and toxic elements are extracted from either solid samples or the solid portion of aqueous samples by refluxing the sample for 30 min in a mixture of nitric

and hydrochloric acids. After extraction, the solubilized analytes are diluted to specified volumes with deionized distilled water. Diluted samples are to be analyzed by mass and/or atomic spectrometry methods within 72 h after preparation.

2. Definitions

2.1. Total recoverable. The concentration of analyte determined to be in either a solid sample or an unfiltered aqueous sample following treatment by refluxing with hot dilute mineral acid.

3. Interferences

3.1. Contamination is of prime concern during sample preparation. The work area, including the bench top and fume hood, should be periodically cleaned to eliminate environmental contamination.

3.2. Chemical interferences are matrix dependent.

3.3. Silica from the glassware will grow into the sample solution during and following sample processing. To reduce silica contamination, analyze the sample as soon as possible after final dilution. A laboratory reagent blank can be used to monitor the effect.

4. Sample Collection and Preservation

4.1. For the determination of total recoverable elements in aqueous samples, acidify with 1:1 nitric acid at the time of collection to a pH of <2. The sample should not be filtered before analysis.

NOTE: Samples that cannot be acid preserved at the time of collection because of sampling limitations or transport restrictions, should be acidified with nitric acid to a pH of <2 upon receipt in the laboratory (normally, 3 mL of 1:1 nitric acid per liter of sample is sufficient for most ground, surface, and drinking-water samples). Following acidification, the sample should be held for 16 h before withdrawing an aliquot for sample processing.

4.2. Solid samples usually require no preservation before analysis other than storage at 4°C.

5. Apparatus

NOTE: For the determination of trace levels of elements, contamination and loss are of prime consideration. Potential contamination sources include improperly cleaned laboratory apparatus and general contamination within the laboratory environment from dust, etc. A clean laboratory work area, designated for trace-element sample handling, must be used. Sample containers can introduce positive and negative errors in the

determination of trace elements by (1) contributing contaminants through surface desorption or leaching, or (2) depleting element concentrations through adsorption processes. All reuseable labware (glass, quartz, polyethylene, Teflon, etc.) including the sample containers should be cleaned before use. Labware should be soaked overnight and thoroughly washed with laboratory-grade detergent and water, rinsed with water, and soaked for 4 h in a mixture of dilute nitric and hydrochloric acid, followed by rinsing with water, ASTM type I water, and oven drying. *Chromic acid must not be used for the cleaning of glassware.*

5.1. Volumetric flasks.

5.2. Graduated cylinders.

5.3. Centrifuge tubes: glass.

5.4. Pipettes: assorted sizes.

5.5. Centrifuge tubes: 50-mL, polyethylene.

5.6. Mash bottle: one-piece stem, polyethylene bottle with screw closure, 500-mL.

5.7. Micropipettes. Rainin, various sizes.

5.8. Balance. Analytical, capable of accurately weighing to 0.1 mg.

5.9. Hot plate. Corning PC100 or equivalent.

5.10. Centrifuge. Steel cabinet with guard bowl, electric timer, and brake.

6. Reagents

6.1. Reagents may contain elemental impurities which might affect analytical data. High-purity reagents should be used whenever possible. All acids used for this method must be of ultra high-purity grade.

6.1.1. Nitric acid (concentrated, sp. gr. 1.41).

6.1.2. Nitric acid (1:1). Dilute 500 mL of concentrated nitric acid to 1000 mL with ASTM type I water.

6.1.3. Hydrochloric acid (concentrated, sp. gr. 1.19).

6.1.4. Hydrochloric acid (1:4). Dilute 200 mL of concentrated hydrochloric acid to 1000 mL with ASTM type I water.

6.2. Water. For all sample preparation and dilutions, ASTM type I water is required. Suitable water may be prepared by passing distilled water through a mixed bed of anion and cation exchange resins.

7. Calibration and Standards

7.1. Micropipettes should be calibrated quarterly at 10%, 50%, and 100% of maximum volume.

8. Procedure

8.1. Sample preparation - aqueous samples.

8.1.1. To determine total recoverable elements in water or waste water, take a 25-50 mL aliquot from a well-mixed, acid-preserved sample containing not more than 0.25% (w/v) total solids, and transfer it to a 50-mL centrifuge tube. If total solids are greater than 0.25%, reduce the size of the aliquot by a proportionate amount.

8.1.2. Add 0.25-0.50 mL of concentrated nitric acid and 0.125-0.250 mL concentrated hydrochloric acid. Heat on a hot plate until the volume has been reduced to approximately 5 mL, ensuring that the sample does not boil. Evaporation time for 50 mL of sample at 85°C is approximately 1 h.

8.1.3. Cover the beaker with a watch glass, reflux for 30 min (very slight boiling may occur), and allow to cool.

8.1.4. Dilute to starting volume with ASTM type I water. Centrifuge the sample or allow it to stand overnight to separate insoluble material.

8.1.5. The sample is now ready for analysis by either ICPAES or direct-aspiration flame and stabilized temperature platform furnace atomic absorption spectroscopy. For analyses by ICPMS, pipette 20 mL of the prepared solution into a 50-mL volumetric flask and dilute to volume with ASTM type I water. Analyses should be performed within 72 h of the completed preparation.

8.2. Sample preparation - solid samples.

8.2.1. To determine total recoverable elements in solid samples (sludge, soils, sediments), thoroughly mix the sample to achieve homogeneity and accurately weigh a 1.0 ± 0.01 g portion of the sample.

8.2.2. Transfer the aliquot to a 50-mL centrifuge tube. Add 4 mL of 1:1 nitric acid and 10 mL of 1:4 hydrochloric acid.

8.2.3. Cover with a watch glass, heat on a hot plate at 95°C, and gently reflux for 30 min (very slight boiling may occur). Allow the sample to cool.

8.2.4. Dilute to volume with ASTM type I water. Centrifuge the sample or allow to stand overnight to separate insoluble material.

8.2.5. The sample is now ready for analysis by either ICPAES or direct-aspiration flame and stabilized temperature platform furnace atomic absorption spectroscopy. For analysis by ICPMS, pipette 10 mL into a 50-mL volumetric flask and dilute to volume with ASTM type I water. Analyses should be performed within 72 h of the completed preparation.

8.2.6. Determine the percent solids in the sample for use in calculations and for reporting data on a dry-weight basis.

WATER (BOUND AND UNBOUND) IN GEOLOGICAL MATRICES — HIGH TEMPERATURE COULOMETRY

Analyte: H_2O^- and H_2O^+	**Method No.:** EI790
Matrix: Rocks	**Minimum Detectable Concentration:** 100 ppm
Procedure: High-temperature moisture evolution with coulometric titration	
Effective Date: 04/01/86 to 08/01/92	**Author:** Ernest S. Gladney

SAFETY NOTE: Before beginning this procedure, read all of the Material Safety Data Sheets for the chemicals listed in Sec. 7. Read Sec. 4.3 of the EM-9 Safety Manual for information on personl protective clothing and equipment.

1. Principle of Method

1.1. Small samples of geological materials are weighed into tantalum boats and inserted into the oven of a DuPont 903H Moisture Analyzer. Oven heat vaporizes unbound water at 110°C or bound water at 1000°C from the sample into dry nitrogen carrier gas that transports the water to the electrolytic cell. A thin film of phosphorous pentoxide deposited between two helically wound electrodes absorbs the water.

1.2. The water reacts with the P_2O_5 to form H_3PO_4, which is electrolyzed back to P_2O_5, hydrogen, and oxygen (coulometric regeneration). The charge required to completely regenerate the P_2O_5 is integrated and displayed on the front of the instrument.

2. Sensitivity

2.1. About 10 μg of water can be detected in a 100 mg sample of rock, yielding a detection limit of about 0.01% or 100 ppm.

3. Accuracy and Precision

3.1. There is a wide variety of international rock reference materials which have data on unbound (H_2O^-) and bound (H_2O^+) water measured by several other methods. The following table shows comparative data on some U.S. Geological Survey (USGS) rock reference materials:

USGS	H_2O^-		H_2O^+	
Material	This Method	Literature	This Method	Literature
AGV-1	0.96 ± 0.04	1.01 ± 0.21	0.74 ± 0.04	0.80 ± 0.18
DTS-1	0.10 ± 0.01	0.06 ± 0.03	0.44 ± 0.04	0.43 ± 0.10
GSP-1	0.11 ± 0.01	0.08 ± 0.04	0.58 ± 0.06	0.53 ± 0.11
PCC-1	0.52 ± 0.05	0.42 ± 0.13	4.78 ± 0.41	4.71 ± 0.12

3.2. Analyze 10% USGS PCC-1 material to meet QC requirements. This material is probably the best characterized geostandard for H_2O^- and H_2O^+, and requires only 20 mg of sample per run.

4. Interferences

4.1. Any nonaqueous substances that volatilize below 1000° C may cause a positive interference in the cell, and if abundant can destroy the P_2O_5 coating on the cell. Soils and hydrocarbon-rich rocks (shales, marine muds, coals) should NOT be analyzed in this instrument.

5. Collection and Storage of Samples

5.1. No special collection and storage procedures are generally required. It is advisable not to heat the samples significantly or freeze dry them if meaningful H_2O^- results are desired. The accuracy, usefulness, and meaning of this measurement is a matter of continuing controversy among geoanalysts.

6. Apparatus

6.1. Moisture Analyzer. DuPont 903H. See Fig. 1.

6.2. Tantalum sample boats.

6.3. Molecular seive gas dryer.

6.4. High-purity nitrogen gas.

6.5. Nitrogen regulator with 5 psig output.

6.6. Analytical balance.

6.7. Capillary tubing.

7. Reagents

7.1. Sodium tungstate ($Na_2WO_4 \bullet 2H_2O$).

7.2. Distilled water (highest purity available).

8. Calibration and Standards

8.1. Use either water or a stoichiometrically hydrated salt. Draw water up in capillary tubing and directly weigh. Weigh hydrated salts and calculate their water content from their chemical formulas.

8.2. Process weighed quantities of the calibrating agent similarly to samples as described in Step 9.1. Run standards only once for 20 min at 150°C, and calculate the calibration factor as described in Step 11.1. Use 10-20 mg of sodium tungstate. Fire a 20-min blank at 150°C following the calibration run to determine the system blank counting rate at this temperature (typically less than 1.0 count/min).

9. Procedure

9.1. System startup.

9.1.1. Adjust nitrogen flow to 70-90 mL/min at 5 psig (35 kPa) by opening the main tank valve and the toggle switch on the regulator. Adjust the flow rate with the needle valve under the instrument cover (back right corner). Purge for 10 min.

9.1.2. Set instrument temperature to the maximum (10.0 on potentiometer), place the sample boat in the oven, replace the Teflon stopper, close the lid, and fire the instrument for 20 min. Record the counts and let cool to < 75°C.

9.1.3. With the temperature potentiometer set to 0.0 and time set to 10 min, depress the zero set switch. The count rate should be less than 0.1 count/s. Adjust the zero knob to yield this rate.

9.2. System calibration.

9.2.1. Weigh 10-20 mg of $Na_2WO_4 \bullet 2H_2O$ in the sample boat and record the exact weight.

9.2.2. Open system cover. Remove the Teflon stopper, quickly insert the sample boat, and replace the stopper. Minimize the system exposure to atmospheric air to reduce the blank.

9.2.3. Fire system for 20 min at 150°C. Record the total counts observed.

9.2.4. Remove the boat and replace the stopper, being careful to minimize system exposure to atmospheric air. Purge with dry nitrogen for 10 min.

9.2.5. Dispose of the contents of the boat. Reinsert the boat in the system and fire for 20 min at 150°C to determine the blank count rate.

9.2.6. Rerun the calibration standards at appropriate intervals during the day.

9.3. Sample analysis.

9.3.1. Weigh 10-100 mg of rock powder into a tantalum boat (use the same pre-fired boat as used for the calibration standard). If the approximate levels of H_2O^- and H_2O^+ are known, select a sample size that will approximate the water content of the standard, up to a maximum of 100 mg sample.

9.3.2. Open the system cover, remove the Teflon stopper, quickly the insert boat, and replace the stopper. Adjust nitrogen flow rate using the needle valve. Close the cover.

9.3.3. Set temperature potentiometer to 110°C and reset the counter display. Fire the system by setting the timer to 20 min. Record the contents of the counter display at the end of combustion.

9.3.4. Set temperature potentiometer to 1000°C and reset the counter display. Fire the system by setting the timer to 20 min. Record the contents of the counter display at the end of combustion.

9.3.5. After the system cools, remove the boat, empty its contents, reinsert the boat, and run a blank as in Steps 9.3.2 to 9.3.4.

10. Operation of Equipment

10.1. See Instruction Manual for 903 & 903H Moisture Evolution Analyzer.

11. Calculations

11.1. The calibration factor is determined from the following equation:

$$K = \frac{(0.1097)\ (W)\ (100)}{Sc - Bc}$$

where K = calibration factor,
W = weight of $Na_2WO_4 \bullet 2H_2O$ (mg),
Sc = standard counts, and
Bc = blank counts.

11.2. Unbound water (H_2O^-) is determined using the following equation:

$$\%H_2O^- = \frac{(K)[(\text{first sample counts}) - (\text{first blank counts})]}{\text{sample wt. (mg)}}$$

11.3. Bound water (H_2O^+) is determined using the following equation:

$$\%H_2O^+ = \frac{(K)[(\text{second sample counts}) - (\text{second blank counts})]}{\text{sample wt. (mg)}}$$

12. Source Materials

12.1. Analytical Instruments Division, DuPont Company, "Instruction Manual, 903 & 903H Moisture Evolution Analyzer," PN 902117-001, Rev. B, January 1982.

12.2. F. A. Keidel, "Determination of Water by Direct Amperometric Measurement," *Anal. Chem.* **31**, 2043-2048 (1959).

12.3. M. Cremer, H. N. Elsheimer, and E. E. Escher, "Microcoulometric Measurement of Water in Minerals," *Analytica Chimica Acta* **60**, 183-192 (1972).

12.4. R. L. Hassel, "Coulometric Determination of Moisture in Polymers," *American Laboratory* **8**, 33-37 (1976).

12.5. J. W. Pyper, "The Determination of Moisture in Solids: A Selected Review," *Analytica Chimica Acta* **170**, 159-175 (1985).

12.6. N. W. Bower, D. K. Kim, and E. S. Gladney, "Determination of Water in Nineteen USGS Geochemical Reference Standards using Coulometry and Neutron-capture Prompt Gamma-ray Spectroscopy," *Geostandards Newsletter*, **11**, 37-40 (1987).

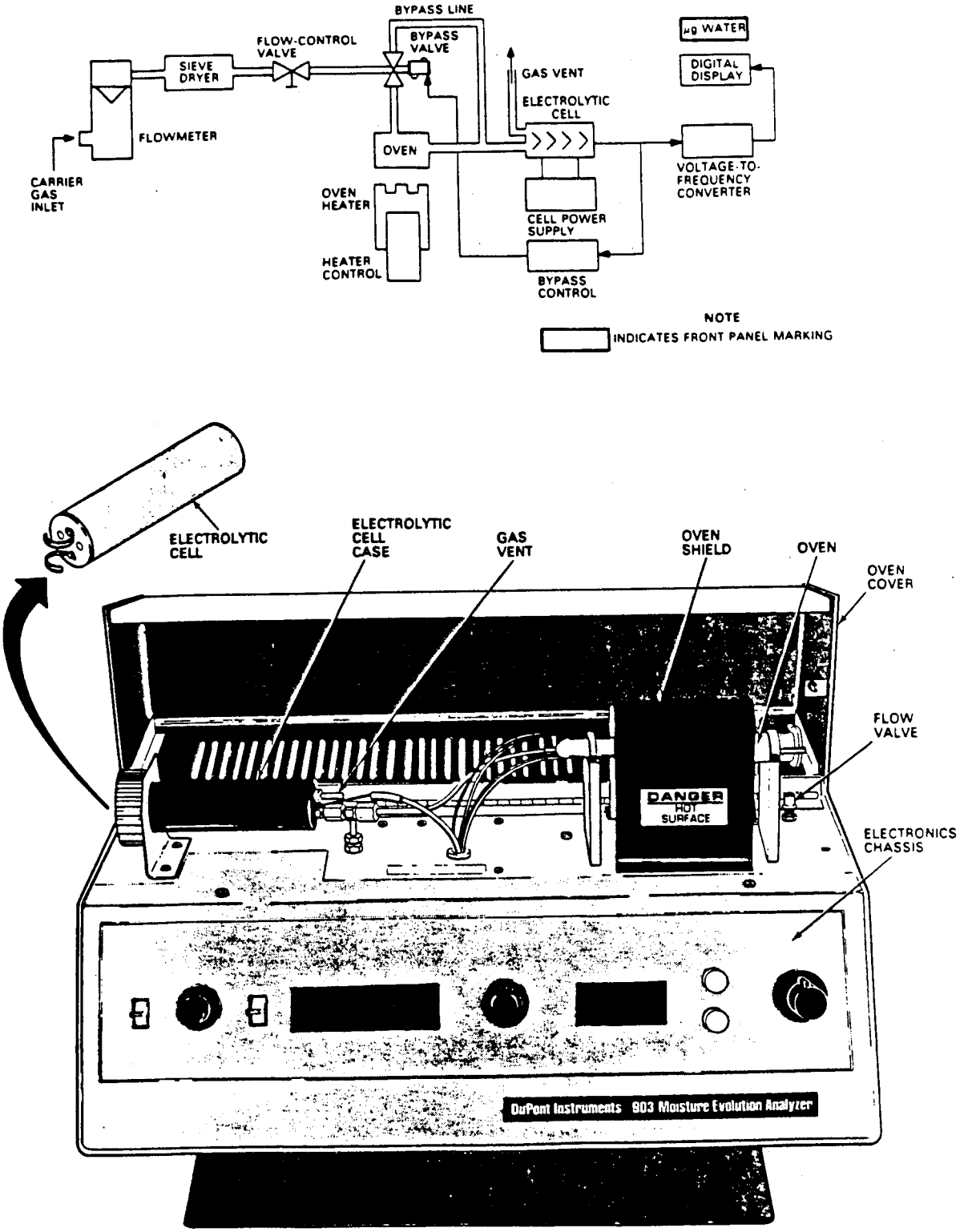

Fig. 1. Moisture analyzer.

POLYCHLORINATED BIPHENYLS (PCBs) IN OIL: SOLVENT EXTRACTION — GC/ECD

Analyte: Polychlorinated biphenyls	**Method No.:** EO400
Matrix: Oil	**Minimum Detection Limit:** 0.5 μg/g
Procedure: Hexane dilution followed by capillary gas chromatography with electron capture detection	
Effective Date: 08/01/91	**Author:** Jeff Roberts

SAFETY NOTE: Before beginning this procedure, read all of the Material Safety Data Sheets for the chemicals listed in Sec. 7. Read Sec. 4.3 of the EM-9 Safety Manual for information on personal protective clothing and equipment. Read Sec. 12 of this procedure and Source Material 13.2 for proper waste disposal practices.

1. Principle of Method

1.1. This method is applicable to the determination of the following analytes:

Analyte	Chemical Abstract Service Registry Number
Arochlor 1016	12674-11-2
Arochlor 1221	11104-28-2
Arochlor 1232	11141-16-5
Arochlor 1242	53469-21-9
Arochlor 1248	12672-29-6
Arochlor 1254	11097-69-1
Arochlor 1260	11096-82-5
Arochlor 1262	37324-23-5

1.2. The applicability of this method for the determination of analytes other than those listed above must be demonstrated by the analyst.

1.3. Actual detection limits may vary from that listed above because detection limits are highly dependent upon chromatographic conditions and the unique matrix of any given sample.

1.4. This method is restricted to use by or directly under the supervision of analysts experienced in the use of gas chromatography and the interpretation of chromatographic data.

1.5. Although this procedure is designed to be detailed and comprehensive, it must be understood that situations may arise that require deviation from this procedure. This is particularly true of interpretation of chromatographic data. These deviations will be made at the discretion of the analyst and his/her supervisor and must be thoroughly documented.

2. Summary of Method

2.1. A determined weight of sample is diluted with hexane to a known volume.

2.1.1. Sample cleanup and/or dilution is performed as necessary.

2.2. Samples are analyzed using a gas chromatograph and its associated data system.

2.3. Collected data is reviewed by a qualified analyst and Arochlors are identified and quantitated.

2.4. Applicable work is documented according to accepted laboratory operating procedures, and to satisfy all regulatory compliance requirements.

3. Sample Collection, Preservation and Storage

3.1. Samples are placed in separate, tightly capped glass bottles.

3.2. No preservation is required.

4. Interferences

4.1. Interference may be caused by contaminants in solvents, reagents, glassware, and other sample processing equipment that lead to either discrete artifacts or elevated baselines in gas chromatograms.

4.1.1. The use of high purity solvents and other chemicals will help to minimize interference problems.

4.1.2. Scrupulous cleaning of glassware and other equipment will help to minimize interference problems.

4.1.3. Strict adherence to standard laboratory practices will help minimize analyst-generated interferences.

4.2. Matrix interferences pose a significant problem in PCB analyses. Each sample may be cleaned up and/or diluted before analysis as necessary.

5. Safety

5.1. The toxicity and carcinogenicity of chemicals used in this method have not been precisely defined. Each chemical should be treated as a potential health hazard, and exposure minimized. Each person using this procedure must know where the Material Safety Data Sheets (MSDSs) are located and must have read them before use. The MSDS for each chemical used must be posted in a clearly marked envelope secured to the left wall inside the fume hood.

5.2. PCB products have been tentatively classified as known or suspected human or mammalian carcinogens. Pure standard materials and stock standard solutions of these compounds should be handled with gloves inside a fume hood.

5.3. Since the chemical composition of the samples is unknown, all samples must be considered potentially hazardous, and must be handled and extracted in a fume hood.

5.4. The gas chromatograph (GC) system must be vented into a hood.

5.5. All gas cylinders must be secured, fitted with the proper regulators and fittings, and located outside the building in a secured area.

5.6. Two waste containers must be available for the disposal of PCB-contaminated waste. One container must be for waste containing <500 ppm PCBs, and the other for waste containing >500 ppm PCBs. These containers will be properly labeled and will be disposed of by EM-7.

5.7. The laboratory will have an eye wash station that is flushed at least monthly for a minimum of 3 min. The date of the flushing and the name or initials of the person performing the flushing will be recorded.

5.8. The laboratory will have safety glasses available for all persons present in the laboratory, including guests. Safety glasses must be worn at all times by any personnel present beyond the leading edge of the fume hood, and by each person anywhere in the laboratory whenever operations requiring safety glasses are being performed by anyone in the laboratory.

5.9. The laboratory will have protective gloves, suitable for the chemicals used, available for employees. These are to be worn whenever the possibility of contact with samples or chemicals exist.

5.10. The laboratory will provide employees with protective aprons or lab coats that are suitable for the chemicals used.

5.11. No one is allowed to perform laboratory work unless at least one other person is present in the immediate vicinity who is aware that laboratory work is being performed.

6. Apparatus

6.1. Analytical balance: with accuracy to 0.0001 g.

6.2. Pasteur pipettes: 5-in., disposable.

6.3. Volumetric pipette: 10-mL with automatic dispenser.

6.4. Microliter syringes: assorted sizes.

6.5. Volumetric flasks: 1- to 25-mL with ground glass stoppers.

6.6. Sonicator bath.

6.7. Automatic liquid sampler (ALS) vials: 1-mL with Teflon lined crimp-seal caps.

6.8. Capping and uncapping device for ALS vials.

6.9. Gas chromatograph system, including:

- heated injection port,
- temperature programming capabilities,
- appropriate detection system,
- electronically controlled autosampler, and
- complete data system.

7. Reagents

7.1. Hexane.

7.2. Acetone.

7.3. Iso-octane: pesticide-grade or equivalent.

7.4. Stock standard solutions.

7.4.1. Prepare stock standard solutions within a concentration range of 20-50 (mg/L). This may be accomplished by diluting a certified solution or by accurately weighing the neat material and diluting to volume with hexane or iso-octane. If the purity of the neat material is assayed to be 96% or greater, the weight can be used without correction to calculate the concentration of the stock standard solution.

7.4.2. Transfer the stock standard solutions into Teflon-sealed screw-cap glass bottles and store at 4°C. These standards may be kept for up to one year.

7.5. Secondary (calibration, working) standards.

7.5.1. Prepare calibration standards at a minimum of five concentration levels for each parameter of interest by dilution of the stock standards with hexane. One of the concentrations should be at or near the method detection limit (MDL). The subsequent standards should define the working linear range of the GC. Add a surrogate, 2,4,5-tribromobiphenyl, to each of the secondary standards at a level of 260 μg/L.

7.5.2. Transfer the secondary standards to a Teflon-sealed screw-cap glass bottle and store at 4°C. Secondary standards may be kept for up to six months.

7.6. Surrogate Standard.

7.6.1. The surrogate compound in use is 2,4,5-tribromobiphenyl. The surrogate will be added to every sample run to monitor the performance of the extraction, cleanup, and analytical systems. The surrogate standard will be prepared at a level of 2.6 mg/L. The surrogate will be spiked in each matrix to give a final concentration of 260 mg/L.

8. Calibration

8.1. Gas chromatographic conditions are established in accordance with the requirements of the individual analyst. The following criteria must be met:

- sufficient resolution to allow accurate quantitation and identification;
- sufficient sensitivity to allow accurate quantitation to the MDL; and
- sufficient ability for the system to thermally clean itself to minimize sample carryover and/or elevated baselines.

8.2. External standard calibration procedure.

8.2.1. Analyze at least five concentrations for each Arochlor. Quantitate the individual Arochlors either by summing the total areas of the patterns or by specifying a minimum of four peaks per individual Arochlor pattern. The calibration range will be defined from at or near the method detection limit to the upper linear range of the detection system.

8.2.2. Calculate a calibration curve for each chosen peak or for each grouped pattern. Each curve will have a minimum correlation coefficient of 0.995 using a least squares regression. The calibration curves must be of the first-order linear type, with the origin forced through zero. Alternatively, the analyst can calculate the response factor for each peak or group at each level and determine the average response factors. If the percent relative standard deviation for each analyte is less than 20%, it

can be assumed the curve is linear over the calibration range with the origin at zero. The average response factor can then be used for quantitation.

8.3. Continuing calibration.

8.3.1. Verify the working calibration curve each working day by measuring one calibration standard for each Arochlor being quantitated.

8.3.2. The calculated value of the continuing calibration standard must be within 20% of the true value. If it does not meet this criterion, analyze a fresh aliquot of the standard. If the standard still does not meet this criterion, recalibrate the GC for that Arochlor.

9. Quality Control

9.1. Each analytical request must contain at least one quality control (QC) sample for every 10 samples or be batched with another set that contains a QC. In order to be considered a batch, all samples must be extracted and analyzed at the same time.

9.2. Quality control results must fall within specified limits. If they do not, the analyst must determine the cause of the problem and correct it whenever possible, reanalyzing associated samples as necessary. If it is not possible to reanalyze the samples, the reason for the QC failure and the inability to repeat the analysis must be documented on the report.

10. Procedure

10.1. Cleaning of glassware and equipment.

10.1.1. Glassware and other equipment that will come into direct contact with samples, standards, or reagents must be scrupulously clean in order to minimize contamination and interference problems.

10.1.2. Unused vials, glass bottles, caps, and lids need not be washed before use. All previously used glassware and equipment is cleaned immediately after use by thoroughly rinsing with hexane or with the last solvent used in the glassware. This rinse is followed by washing with hot water and detergent, rinsing thoroughly with tap water and distilled water, and then rinsing generously with hexane. Glassware is allowed to dry in the hood.

10.2. Sample dilution and cleanup.

10.2.1. Weigh out approximately 0.100 g of oil into a 1-mL volumetric test tube, making sure to record the exact weight. Dilute to 1 mL with hexane. Mix thoroughly.

10.2.2. From the solution prepared in 10.2.1, make a 1:10 dilution. This will constitute the undiluted sample needed to hit the 5.0 μg/g detection limit. Any further dilutions require the detection limit to be raised. Spike the sample with the surrogate solution so that the concentration of the surrogate is 260 μg/L.

10.2.3. If subsequent analysis shows significant matrix interferences, cleanup may be necessary. Accepted cleanup methods are treatment with concentrated sulfuric acid and/or running the sample through a Florisil column. Subject all associated quality control samples to whichever cleanup procedure is chosen.

10.3. Identification of PCBs.

10.3.1. Compare sample chromatograms with standard Arochlor chromatograms to determine which, if any, Arochlors are present in the sample. Determine which Arochlor or combination of Arochlors, and in what proportion, will produce a chromatogram most similar to that of the sample.

PCBs tend to degrade with age. This may cause the loss of certain peaks, particularly the earlier eluting peaks which represent the lower molecular weight compounds. This can make identification more difficult, particularly if the analyst is not aware of this phenomenon.

Because of the difficulties involved in the identification of these multicomponent residues, final judgements should not be left to an inexperienced analyst.

11. Quantitation

11.1. Separately quantitate each peak using the curve established earlier. Alternatively, the sum of the peak areas may be used to calculate the concentration of the compounds of interest.

11.2. Average the calculated values for each peak in a given Arochlor to give the extract concentration in μg/mL. Eliminate obvious outliers before averaging.

NOTE: If the calculated values for each peak appear to vary greatly, it may indicate that the Arochlor was incorrectly identified.

11.3. Multiply the resulting number by the volume of solvent used in the initial dilution (normally 1 mL). Divide by the initial weight of the oil. Adjust for additional dilution if necessary.

$$C = \frac{C_e \times V_s}{D \times W} ,$$

where C = concentration of analyte (μg/g),
C_e = extract concentration (μg/mL),
V_s = volume of solvent (mL),
D = dilution factor, and
W = weight of oil (g).

A sample calculation, assuming 1 mL initial volume, 0.1064 g initial weight, a dilution of 100 μL of extract to 1 mL total volume (noted as a 0.1 dilution), and a calculated concentration in the extract of 0.76 μg/mL is:

$$C = \frac{0.76\ \mu g/mL \times 1\ mL}{0.1 \times 0.1064\ g} = 71\ \mu g/g .$$

12. Proper Waste Disposal

12.1. General waste management.

12.1.1. Each analyst in the section must receive Waste Generator training from EM-8 within 90 days of the date of hire.

12.1.2. Wherever possible, minimize the generation of waste through reduction, reuse, or recycling. Wherever possible, segregate containers to reflect the nature of the hazardous waste and the eventual waste disposal methods. For example, chlorinated solvent wastes should be segregated from flammable, nonchlorinated solvents and >50-ppm contaminated waste. This is especially important in analysis areas where the waste generated is considered to be mixed waste.

12.1.3. Categorize the waste using an EM-8 Waste Profile Form.

12.1.4. Upon completion of the Waste Profile Form, dispose of the waste by completing a Waste Disposal Request Form from EM-7. Approximately 30 days is required for the disposal of waste after the completion of the listed forms.

12.2. Solid waste.

12.2.1. Accumulate solid hazardous wastes, such as contaminated paper towels, pipettes, spent syringes, and glass vials, in a covered plastic container lined with a plastic bag. Label the container with a hazardous waste label which identifies the hazard, type of material being stored (i.e., pipettes, paper towels, etc.), the accumulation start date, and the laboratory of origin.

12.2.2. Open the waste container only for the time necessary to add the waste.

12.3. Liquid waste.

12.3.1. Accumulate liquid wastes, such as spent samples and spent solvents that are not reuseable, in glass or steel containers appropriate for the type of sample being stored. For example, store caustic materials in glass containers and spent solvents that are not bound for recycling in metal containers.

12.3.2. Place all containers storing hazardous liquid materials within secondary containment. Label the container with a hazardous waste label which identifies the hazard, type of material being stored (i.e., pipettes, paper towels, etc.), the accumulation start date, and the laboratory of origin.

12.3.3. Open the waste container only for the time necessary to add the waste.

12.4. Unused samples.

12.4.1. Return unused environmental samples to the Sample Management section for disposal.

13. Source Materials

13.1. ASTM Method D4059-91, "Standard Test Method for Analysis of Polychlorinated Biphenyls in Insulating Liquids by Gas Chromatography," April 1991.

13.2. "Hazardous and Mixed Waste," Administrative Requirement 10-3, in *Environment, Safety, and Health Manual*, Los Alamos National Laboratory Manual, Chapter 1 (most recent edition).

POLYCHLORINATED BIPHENYLS (PCBs) IN SOIL: SOLVENT EXTRACTION — GC/ECD

Analyte: Polychlorinated biphenyls	**Method No.:** EO410
Matrix: Soil and miscellaneous solids	**Minimum Detection Limit:** 0.06 μg/g
Procedure: Hexane extraction by sonication followed by capillary gas chromatography with electron capture detection	
Effective Date: 08/01/91	**Author:** Jeff Roberts

SAFETY NOTE: Before beginning this procedure, read all of the Material Safety Data Sheets for the chemicals listed in Sec. 7. Read Sec. 4.3 of the EM-9 Safety Manual for information on personal protective clothing and equipment. Read Sec. 12 of this procedure and Source Material 13.2 for proper waste disposal practices.

1. Principle of Method

1.1. This method is applicable to the determination of the following analytes:

Analyte	Chemical Abstract Service Registry Number
Arochlor 1016	12674-11-2
Arochlor 1221	11104-28-2
Arochlor 1232	11141-16-5
Archolor 1242	53469-21-9
Arochlor 1248	12672-29-6
Archolor 1254	11097-69-1
Archolor 1260	11095-82-5
Archolor 1262	37324-23-5

1.2. The applicability of this method for the determination of analytes other than those listed above must be demonstrated by the analyst.

1.3. Actual detection limits may vary from that listed above because detection limits are highly dependent upon chromatographic conditions and the unique matrix of any given sample.

1.4. This method is restricted to use by or directly under the supervision of analysts experienced in the use of gas chromatography and the interpretation of chromatographic data.

1.5. Although this procedure is designed to be detailed and comprehensive, it must be understood that situations may arise that require deviation from this procedure. This is particularly true of interpretation of chromatographic data. These deviations will be made at the discretion of the analyst and his/her supervisor and must be thoroughly documented.

2. Summary of Method

2.1. Percent moisture of the soil samples is determined to allow for reporting on a dry weight basis.

2.2. Samples are extracted into hexane or acetone using sonication.

2.3. Sample cleanup and/or dilution is performed as necessary.

2.4. Samples are analyzed using a gas chromatograph and its associated data system.

2.5. Collected data is reviewed by a qualified analyst and Arochlors are identified and quantitated.

2.6. Applicable work is documented according to accepted laboratory operating procedures, and to satisfy all regulatory compliance requirements.

3. Sample Collection, Preservation and Storage

3.1. Soil samples are placed into clean glass bottles and sealed with Teflon-lined caps.

3.2. Samples are placed in a separate, sealed glass bottles.

3.3. No preservation is required if the samples are submitted within 2 h of collection; otherwise the samples must be kept at 4°C.

3.4. Samples are kept refrigerated at 4°C until extracted and analyzed.

4. Interferences

4.1. Interference may be caused by contaminants in solvents, reagents, glassware, and other sample processing equipment that lead to either discrete artifacts or elevated baselines in gas chromatograms.

4.1.1. The use of high purity solvents and other chemicals will help to minimize interference problems.

4.1.2. Scrupulous cleaning of glassware and other equipment will help to minimize interference problems.

4.1.3. Strict adherence to standard laboratory practices will help minimize analyst-generated interferences.

4.2. Matrix interferences pose a significant problem in PCB analyses. Each sample may be cleaned up and/or diluted before analysis as necessary.

5. Safety

5.1. The toxicity and carcinogenicity of chemicals used in this method have not been precisely defined. Each chemical should be treated as a potential health hazard, and exposure minimized. Each person using this procedure must know where the Material Safety Data Sheets (MSDSs) are located and must have read them before use. The MSDS for each chemical used must be posted in a clearly marked envelope secured to the left wall inside the fume hood.

5.2. PCB products have been tentatively classified as known or suspected human or mammalian carcinogens. Pure standard materials and stock standard solution of these compounds should be handled with gloves inside a fume hood.

5.3. Since the chemical composition of the samples is unknown, all samples must be considered potentially hazardous, and must be handled and extracted in a fume hood.

5.4. The gas chromatograph (GC) system must be vented into a hood.

5.5. All gas cylinders must be secured, fitted with the proper regulators and fittings, and located outside the building in a secured area.

5.6. Two waste containers must be available for the disposal of PCB contaminated waste. One container must be for waste containing <500 ppm PCBs, and the other for waste containing >500 ppm PCBs. These containers will be properly labeled and will be disposed of by EM-7.

5.7. The laboratory will have an eye wash station that is flushed at least monthly for a minimum of 3 min. The date of the flushing and the name or initials of the person performing the flushing will be recorded.

5.8. The laboratory will have safety glasses available for all persons present in the laboratory, including guests. Safety glasses must be worn at all times by any personnel present beyond the leading edge of the fume hood, and by each person anywhere in the laboratory whenever operations requiring safety glasses are being performed by anyone in the laboratory.

5.9. The laboratory will have protective gloves, suitable for the chemicals used, available for employees. These are to be worn whenever the possibility of contact with samples or chemicals exist.

5.10. The laboratory will provide employees with protective aprons or lab coats that are suitable for the chemicals used.

5.11. No one is allowed to perform laboratory work unless at least one other person is present in the immediate vicinity who is aware that laboratory work is being performed.

6. Apparatus

6.1. Analytical balance: with accuracy to 0.0001 g.

6.2. Pasteur pipettes: 5-in., disposable.

6.3. Volumetric pipette: 10-mL with automatic dispenser.

6.4. Microliter syringes: assorted sizes.

6.5. Volumetric flasks: 1- to 25-mL with ground glass stoppers.

6.6. Sonicator bath.

6.7. Automatic liquid sampler (ALS) vials: 1-mL with Teflon lined crimp-seal caps.

6.8. Capping and uncapping device for ALS vials.

6.9. Gas chromatograph system including:

- heated injection port,
- temperature programming capabilities,
- appropriate detection system,
- electronically controlled autosampler, and
- complete data system.

7. Reagents

7.1. Hexane.

7.2. Acetone.

7.3. Iso-octane: pesticide-grade or equivalent.

7.4. Stock standard solutions.

7.4.1. Prepare stock standard solutions within a concentration range of 20-50 (mg/L). This may be accomplished by diluting a certified solution or by accurately weighing the neat material and diluting to volume with hexane or iso-octane. If the purity of the neat material is assayed to be

96% or greater, the weight can be used without correction to calculate the concentration of the stock standard solution.

7.4.2. Transfer the stock standard solutions into Teflon-sealed screw-cap glass bottles and store at 4°C. These standards may be kept for up to one year.

7.5. Secondary (calibration, working) standards.

7.5.1. Prepare calibration standards at a minimum of five concentration levels for each parameter of interest by dilution of the stock standards with hexane. One of the concentrations should be at or near the method detection limit (MDL). The subsequent standards should define the working linear range of the GC add a surrogate, 2,4,5-tribromobiphenyl, to each of the secondary standards at a level of 260 μg/L.

7.5.2. Transfer the secondary standards to a Teflon-sealed screw-cap glass bottle and store at 4°C. Secondary standards may be kept for up to six months.

7.6. Surrogate standard.

7.6.1. The surrogate compound in use is 2,4,5-tribromobiphenyl. The surrogate will be added to every sample run to monitor the performance of the extraction, cleanup, and analytical system. The surrogate standard will be prepared at a level of 2.6 mg/L. The surrogate will be spiked in each matrix to give a final concentration of 260 mg/L.

8. Calibration

8.1. Gas chromatographic conditions are established in accordance with the requirements of the individual analyst. The following criteria must be met:

- sufficient resolution to allow accurate quantitation and identification;
- sufficient sensitivity to allow accurate quantitation to the MDL; and
- sufficient ability for the system to thermally clean itself to minimize sample carryover and/or elevated baselines.

8.2. External standard calibration procedure.

8.2.1. Analyze at least five concentrations for each Arochlor. Quantitate the individual Arochlors either by summing the total areas of the patterns or by specifying a minimum of four peaks per individual Arochlor pattern. The calibration range will be defined from at or near the method detection limit to the upper linear range of the detection system.

8.2.2. Calculate a calibration curve for each chosen peak or for each grouped pattern. Each curve will have a minimum correlation coefficient of 0.995 using a least squares regression. The calibration curves must be of the first-order linear type, with the origin forced through zero. Alternatively, the analyst can calculate the response factor for each peak or group at each level and determine the average response factors. If the percent relative standard deviation for each analyte is less than 20%, it can be assumed the curve is linear over the calibration range with the origin at zero. The average response factor can then be used for quantitation.

8.3. Continuing calibration.

8.3.1. Verify the working calibration curve each working day by measuring one calibration standard for each Arochlor being quantitated.

8.3.2. The calculated value of the continuing calibration standard must be within 20% of the true value. If it does not meet this criterion, analyze a fresh aliquot of the standard. If the standard still does not meet this criterion, recalibrate the GC for that Arochlor.

9. Quality Control

9.1. Each analytical request must contain at least one quality control (QC) sample for every ten samples or be batched with another set that contains a QC. In order to be considered a batch, all samples must be extracted and analyzed at the same time.

9.2. Quality control results must fall within specified limits. If they do not, the analyst must determine the cause of the problem and correct it whenever possible, reanalyzing associated samples as necessary. If it is not possible to reanalyze the samples, the reason for the QC failure and the inability to repeat the analysis must be documented on the report.

10. Procedure

10.1. Cleaning of glassware and equipment.

10.1.1. Glassware and other equipment that will come into direct contact with samples, standards, or reagents must be scrupulously clean in order to minimize contamination and interference problems.

10.1.2. Unused vials, glass bottles, caps, and lids need not be washed before use. All previously used glassware and equipment is cleaned immediately after use by thoroughly rinsing with hexane or with the last solvent used in the glassware. This rinse is followed by washing with hot water and detergent, rinsing thoroughly with tap water and distilled

water, and then rinsing generously with acetone. Glassware is allowed to dry in the hood, and then dried in a 150°C oven for 1 h.

10.2. Sample extraction.

10.2.1. Weigh two separate aliquots of the soil sample, recording the weight to 0.001 g. One aliquot should be approximately 10 g and will be used for the determination of percent moisture. The other aliquot should be approximately 8 g and will be used for PCB determination.

10.2.1.1. The percent moisture determination is made by weighing approximately 10 g (record exact weight) into an aluminum weighing boat. Allow the sample to dry overnight and reweigh. Divide the dry weight of the soil by the wet weight of the soil and multiply by 100 to determine the percent solids. Subtract this number from 100 to get the percent moisture.

10.2.2. The 8 g (wet weight) aliquot is placed in a 20 mL vial. Ten mL of 1:1 hexane/acetone is added.

10.2.3. Cap the bottle tightly and sonicate for 30 min. Remove the bottle from the sonicator bath and tighten the cap.

10.2.4. Spike the sample with an amount of surrogate solution that will give a concentration of the surrogate equal to 260 μg/L.

10.2.5. If subsequent analysis shows significant matrix interferences, cleanup may be necessary. Accepted cleanup methods are treatment with concentrated sulfuric acid and/or running the sample through a Florisil column. Subject all associated quality control samples to whichever cleanup procedure is chosen.

10.3. Identification of PCBs.

10.3.1. Compare sample chromatograms with standard Arochlor chromatograms to determine which, if any, Arochlors are present in the sample. Determine which Arochlor or combination of Arochlors, and in what proportion, will produce a chromatogram most similar to that of the sample.

PCBs tend to degrade with age. This may cause the loss of certain peaks, particularly the earlier eluting peaks which represent the lower molecular weight compounds. This can make identification more difficult, particularly if the analyst is not aware of this phenomenon.

Because of the difficulties involved in the identification of these multicomponent residues, final judgements should not be left to an inexperienced analyst.

11. Quantitation

11.1. Separately quantitate each peak using the curve established earlier. Alternatively, the sum of the peak areas may be used to calculate the concentration of the compounds of interest.

11.2. Average the calculated values for each peak in a given Arochlor to give the extract concentration in μg/mL. Eliminate obvious outliers before averaging.

NOTE: If the calculated values for each peak appear to vary greatly, it may indicate that the Arochlor was incorrectly identified.

11.3. Multiply the resulting number by the volume of solvent used in the extraction procedure (normally 10 mL). Divide by the initial wet weight and multiply by the percent solids. Adjust for dilution if necessary.

$$C = \frac{C_e \times V_s}{(D \times W) \times (1.0 - M)} ,$$

where C = concentration of analyte (μg/g),
C_e = extract concentration (μg/mL),
V_s = volume of solvent (mL),
D = dilution factor,
W = wet weight of soil (g), and
M = moisture content.

A sample calculation, assuming 10 mL extraction solvent and initial wet weight of 8.14 g, 11.3% moisture, a dilution of 10 μL of extract to 1 mL total volume (Noted as a 0.1 dilution) and a calculated concentration in extract of 0.76 μg/mL, is:

$$C = \frac{0.76\ \mu g/mL \times 10\ mL}{(0.1 \times 8.14\ g) \times (1.0 - 0.113)} = 8.3\ \mu g/g$$

12. Proper Waste Disposal Practices

12.1. General waste management.

12.1.1. Each analyst in the section must receive Waste Generator training from EM-8 within 90 days of the date of hire.

12.1.2. Wherever possible, minimize the generation of waste through reduction, reuse, or recycling. Wherever possible, segregate containers to reflect the nature of the hazardous waste and the eventual waste disposal methods. For example, chlorinated solvent wastes should be segregated from flammable, nonchlorinated solvents and >50-ppm contaminated waste. This is especially important in analysis areas where the waste generated is considered to be mixed waste.

12.1.3. Categorize the waste using an EM-8 Waste Profile Form.

12.1.4. Upon completion of the Waste Profile Form, dispose of the waste by completing a Waste Disposal Request Form from EM-7. Approximately 30 days is required for the disposal of waste after the completion of the listed forms.

12.2. Solid waste.

12.2.1. Accumulate solid hazardous wastes, such as contaminated paper towels, pipettes, spent syringes, and glass vials, in a covered plastic container lined with a plastic bag. Label the container with a hazardous waste label which identifies the hazard, type of material being stored (i.e., pipettes, paper towels, etc.), the accumulation start date, and the laboratory of origin.

12.2.2. Open the waste container only for the time necessary to add the waste.

12.3. Liquid waste.

12.3.1. Accumulate liquid wastes, such as spent samples and spent solvents that are not re-useable, in glass or steel containers appropriate for the type of sample being stored. For example, store caustic materials in glass containers and spent solvents that are not bound for recycling in metal containers.

12.3.2. Place all containers storing hazardous liquid materials within secondary containment. Label the container with a hazardous waste label which identifies the hazard, type of material being stored (i.e., pipettes, paper towels, etc.), the accumulation start date, and the laboratory of origin.

12.3.3. Open the waste container only for the time necessary to add the waste.

12.4. Unused samples.

12.4.1. Return unused environmental samples to the Sample Management section for disposal.

13. Source Materials

13.1. ASTM Method D3304-77, "Standard Test Method for Analysis of Environmental Materials for Polychlorinated Biphenyls," July 1977.

13.2. "Hazardous and Mixed Waste," Administrative Requirement 10-3, in *Environment, Safety, and Health Manual*, Los Alamos National Laboratory Manual, Chapter 1 (most recent edition).

POLYCHLORINATED BIPHENYLS (PCBs) IN SWIPES: SOLVENT EXTRACTION — GC/ECD

Analyte: Polychlorinated biphenyls	**Method No.:** EO420
Matrix: Gauze swipes	**Minimum Detection Limit:** 0.5 μg/sample
Procedure: Hexane extraction by sonication followed by capillary gas chromatography with electron capture detection	
Effective Date: 08/01/91	**Author:** Jeff Roberts

SAFETY NOTE: Before beginning this procedure, read all of the Material Safety Data Sheets for the chemicals listed in Sec. 7. Read Sec. 4.3 of the EM-9 Safety Manual for information on personal protective clothing and equipment. Read Sec. 12 of this procedure and Source Material 13.2 for proper waste disposal practices.

1. Principle of Method

1.1. This method is applicable to the determination of the following analytes:

Analyte	Chemical Abstract Service Registry Number
Arochlor 1016	12674-11-2
Arochlor 1221	11104-28-2
Arochlor 1232	11141-16-5
Arochlor 1242	53469-21-9
Arochlor 1248	12672-29-6
Arochlor 1254	11097-69-1
Arochlor 1260	11096-82-5
Arochlor 1262	37324-23-5

1.2. The applicability of this method for the determination of analytes other than those listed above must be demonstrated by the analyst.

1.3. Actual detection limits may vary from that listed above because detection limits are highly dependent upon chromatographic conditions and the unique matrix of any given sample.

1.4. This method is restricted to use by or directly under the supervision of analysts experienced in the use of gas chromatography and the interpretation of chromatographic data.

1.5. Although this procedure is designed to be detailed and comprehensive, it must be understood that situations may arise that require deviation from this procedure. This is particularly true of interpretation of chromatographic data. These deviations will be made at the discretion of the analyst and his/her supervisor and must be thoroughly documented.

2. Summary of Method

2.1. Samples are extracted into hexane using sonication.

2.2. Sample cleanup and/or dilution is performed as necessary.

2.3. Samples are analyzed using a gas chromatograph and its associated data system.

2.4. Collected data is reviewed by a qualified analyst and Arochlors are identified and quantitated.

2.5. Applicable work is documented according to accepted laboratory operating procedures, and to satisfy all regulatory compliance requirements.

3. Sample Collection, Preservation and Storage

3.1. Samples are collected by swiping a 100-cm^2 area with a sterile gauze pad moistened with hexane or cyclohexane.

3.2. Samples are placed in separate, sealed 20-mL glass bottles.

3.3. No preservation is required if the samples are submitted within 2 h of collection; otherwise the samples must be kept at 4°C.

3.4. Samples are kept refrigerated at 4°C until extracted and analyzed.

4. Interferences

4.1. Interference may be caused by contaminants in solvents, reagents, glassware, and other sample processing equipment that leads to either discrete artifacts or elevated baselines in gas chromatograms.

4.1.1. The use of high purity solvents and other chemicals will help to minimize interference problems.

4.1.2. Scrupulous cleaning of glassware and other equipment will also help to minimize interference problems.

4.1.3. Strict adherence to standard laboratory practices will help minimize analyst-generated interferences.

4.2. Matrix interferences pose a significant problem in PCB analyses. Each sample may be cleaned up and/or diluted before analysis as necessary.

5. Safety

5.1. The toxicity and carcinogenicity of chemicals used in this method have not been precisely defined. Each chemical should be treated as a potential health hazard, and exposure minimized. Each person using this procedure must know where the Material Safety Data Sheets (MSDSs) are located and must have read them before use. The MSDS for each chemical used must be posted in a clearly marked envelope secured to the left wall inside the fume hood.

5.2. PCB products have been tentatively classified as known or suspected human or mammalian carcinogens. Pure standard materials and stock standard solutions of these compounds should be handled with gloves inside a fume hood.

5.3. Since the chemical composition of the samples is unknown, all samples must be considered potentially hazardous and must be handled and extracted in a fume hood.

5.4. The gas chromatograph (GC) system must be vented into a hood.

5.5. All gas cylinders must be secured, fitted with the proper regulators and fittings, and located outside the building in a secured area.

5.6. Two waste containers must be available for the disposal of PCB contaminated waste. One container must be for waste containing <500 ppm PCBs, and the other for waste containing >500 ppm PCBs. These waste containers will be properly labeled and shall be disposed of by EM-7.

5.7. The laboratory will have an eye wash station that is flushed at least monthly for a minimum of 3 min. The date of the flushing and the name or initials of the person performing the flushing will be recorded.

5.8. The laboratory will have safety glasses available for all persons present in the laboratory, including guests. Safety glasses must be worn at all times by any personnel present beyond the leading edge of the fume hood and by each person anywhere in the laboratory whenever operations requiring safety glasses are being performed by anyone in the laboratory.

5.9. The laboratory will provide employees with protective aprons or lab coats and protective gloves that are suitable for the chemicals used. These are to be worn whenever the possibility of contact with samples or chemicals exist.

5.10. No one is allowed to perform laboratory work unless at least one other person is present in the immediate vicinity who is aware that laboratory work is being performed.

6. Apparatus

6.1. Gauze pads: 2 x 2 in.

6.2. Analytical balance: with accuracy to 0.0001 g.

6.3. Pasteur pipettes: 5-in., disposable.

6.4. Volumetric pipette: 10-mL with automatic dispenser.

6.5. Microliter syringes: assorted sizes.

6.6. Volumetric flasks: 1- to 25-mL with ground glass stoppers.

6.7. Sonicator bath.

6.8. Automatic liquid sampler (ALS) vials: 1-mL with Teflon lined crimp-seal caps.

6.9. Capping and uncapping device for ALS vials.

6.10. Gas chromatograph system, including:

- heated injection port,
- temperature programming capabilities,
- appropriate detection system,
- electronically controlled autosampler, and
- complete data system.

7. Reagents

7.1. Hexane: pesticide-grade or equivalent.

7.2. Acetone: pesticide-grade or equivalent.

7.3. Iso-octane: pesticide-grade or equivalent.

7.4. Stock standard solutions.

7.4.1. Prepare stock standard solutions within a concentration range of 20-50 mg/L. This may be accomplished by diluting a certified solution or by accurately weighing the neat material and diluting to volume with hexane or iso-octane. If the purity of the neat material is assayed to be 96% or greater, the weight can be used without correction to calculate the concentration of the stock standard solution.

7.4.2. Transfer the stock standard solutions into Teflon-sealed screw-cap glass bottles and store at 4°C. These standards may be kept for up to one year.

7.5. Secondary (calibration, working) standards.

7.5.1. Prepare calibration standards at a minimum of five concentration levels for each parameter of interest by dilution of the stock standards with hexane. One of the concentrations should be at or near the method detection limit (MDL). The subsequent standards should define the working linear range of the GC. Add a surrogate, 2,4,5-tribromobiphenyl, to each of the secondary standards at a level of 260 μg/L.

7.5.2. Transfer the secondary standards to a Teflon-sealed screw-cap glass bottle and store at 4°C. Secondary standards may be kept for up to six months.

7.6. Surrogate standard.

7.6.1. The surrogate compound used is 2,4,5-tribromobiphenyl. Add the surrogate to every sample run to monitor the performance of the extraction, cleanup, and analytical systems. Prepare the surrogate standard at a level of 2.6 mg/L. The surrogate will be spiked in each matrix to give a final concentration of 260 mg/L.

8. Calibration

8.1. Gas chromatographic conditions are established in accordance with the requirements of the individual analyst. The following criteria must be met:

- sufficient resolution to allow accurate quantitation and accurate identification;
- sufficient sensitivity to allow accurate quantitation to the MDL; and
- sufficient ability for the system to thermally clean itself to minimize sample carryover and/or elevated baselines.

8.2. External standard calibration procedure.

8.2.1. Analyze at least five concentrations for each Arochlor. Quantitate the individual Arochlors either by summing the total areas of the patterns or by specifying a minimum of four peaks per individual Arochlor pattern. The calibration range will be defined from at or near the method detection limit to the upper linear range of the detection system.

8.2.2. Calculate a calibration curve for each chosen peak or for each grouped pattern. Each curve will have a minimum correlation coefficient of

0.995 using a least squares regression. The calibration curves must be of the first-order linear type, with the origin forced through zero. Alternatively, the analyst can calculate the response factor for each peak or group at each level and determine the average response factors. If the percent relative standard deviation for each analyte is less than 20%, assume the curve is linear over the calibration range with the origin at zero. The average response factor can then be used for quantitation.

8.3. Continuing calibration.

8.3.1. Verify the working calibration curve each working day by measuring one calibration standard for each Arochlor being quantitated.

8.3.2. The calculated value of the continuing calibration standard must be within 20% of the true value. If it does not meet this criterion, analyze a fresh aliquot of the standard. If the standard still does not meet this criterion, recalibrate the GC for that Arochlor.

9. Quality Control

9.1. Each analytical request must contain at least one quality control (QC) sample for every 10 samples or be batched with another set that contains a QC. In order to be considered a batch, all samples must be extracted and analyzed at the same time.

9.2. Quality control results must fall within specified limits. If they do not, determine the cause of the problem and correct it whenever possible, reanalyzing the associated samples as necessary. If it is not possible to reanalyze the sample, document the reason for the QC failure and the inability to repeat the analysis on the report.

9.3. Run a swipe blank and a sample of the solvent used in the field with each request. Since it is the responsibility of the sampler to provide these to the laboratory, these blanks may not always be available.

10. Procedure

10.1. Cleaning of glassware and equipment.

10.1.1. Glassware and other equipment that will come into direct contact with samples, standards, or reagents must be scrupulously clean in order to minimize contamination and interference problems.

10.1.2. Unused vials, glass bottles, caps and lids need not be washed before use. All previously used glassware and equipment is cleaned immediately after use by thoroughly rinsing with hexane or with the last solvent used in the glassware. This rinse is followed by washing with hot water and

detergent, rinsing thoroughly with tap water and distilled water, and then rinsing generously with hexane. Glassware is allowed to dry in the hood.

10.2. Sample extraction.

10.2.1. Push the gauze down to the bottom of the bottle using a 5-in. Pasteur pipette. Mark the sample number on the lid with a waterproof pen.

10.2.2. Add 10 mL of hexane with a volumetric pipette, being careful not to touch the pipette tip with the gauze or bottle. (If contact is made, the pipette must be thoroughly rinsed with hexane before being used for additional samples).

10.2.3. Cap the bottle tightly and sonicate for 30 min. Remove the bottle from the sonicator bath and tighten the cap.

10.3. Spike the sample with an amount of surrogate solution that will give a surrogate concentration of 260 μg/L.

10.4. If subsequent analysis shows significant matrix interferences, cleanup may be necessary. Accepted cleanup methods are treatment with concentrated sulfuric acid and/or running the sample through a Florisil column. Subject all associated quality control samples to whichever cleanup procedure is chosen.

10.5. Identification of PCBs.

10.5.1. Compare sample chromatograms to standard Arochlor chromatograms to determine which, if any, Arochlors are present in the sample. Determine which Arochlor or combination of Arochlors, and in what proportion, will produce a chromatogram most similar to that of the sample.

PCBs tend to degrade with age. This may cause the loss of certain peaks, particularly the earlier eluting peaks which represent the lower molecular weight compounds. This can make identification more difficult, particularly if the analyst is not aware of this phenomenon.

Because of the difficulties involved in the identification of these multicomponent residues, final judgements should not be left to an inexperienced analyst.

11. Quantitation

11.1. Separately quantitate each peak using the curve established earlier. Alternatively, the sum of the peak areas may be used to calculate the concentration of the compounds of interest.

11.2. Average the calculated values for each peak in a given Arochlor to give the extract concentration in μg/mL. Eliminate obvious outliers before averaging.

NOTE: If the calculated values for each peak appear to vary greatly, it may indicate that the Arochlor was incorrectly identified.

11.3. Multiply the resulting number by the volume of solvent used in the extraction procedure (normally 10 mL). Adjust for dilution if necessary.

$$C = \frac{C_e \times V_s}{D},$$

where C = concentration of analyte (μg/sample),
C_e = extract concentration (μg/mL),
V_s = volume of solvent (mL), and
D = dilution factor.

A sample calculation, assuming 10 mL extraction solvent, a dilution of 100 μL of extract to 1 mL total volume (noted as a 0.1 dilution), and a calculated concentration in the extract of 0.76 μg/mL, gives an analyte concentration of 76 μg/sample:

$$C = \frac{0.76\ \mu g/mL \times 10\ mL}{0.1} = 76\ \mu g/sample$$

12. Proper Waste Disposal Practices

12.1. General waste management.

12.1.1. Each analyst in the section must receive Waste Generator training from EM-8 within 90 days of the date of hire.

12.1.2. Wherever possible, minimize the generation of waste through reduction, reuse, or recycling. Wherever possible, segregate containers to reflect the nature of the hazardous waste and the eventual waste disposal methods. For example, segregate chlorinated solvent wastes from flammable, nonchlorinated solvents and >50-ppm contaminated waste. This is especially important in analysis areas where the waste generated is considered to be mixed waste.

12.1.3. Categorize the waste using an EM-8 Waste Profile Form.

12.1.4. Upon completion of the Waste Profile Form, dispose of the waste by completing a Waste Disposal Request Form from EM-7. Approximately

30 days is required for the disposal of waste after the completion of the listed forms.

12.2. Solid waste.

12.2.1. Accumulate solid hazardous wastes, such as contaminated paper towels, pipettes, spent syringes, and glass vials, in a covered plastic container lined with a plastic bag. Label the container with a hazardous waste label which identifies the hazard, type of material being stored (i.e., pipettes, paper towels, etc.), the accumulation start date, and the laboratory of origin.

12.2.2. Open the waste container only for the time necessary to add the waste.

12.3. Liquid waste.

12.3.1. Accumulate liquid wastes, such as spent samples and spent solvents that are not reusable, in glass or steel containers appropriate for the type of sample being stored. For example, store caustic materials in glass containers and spent solvents that are not bound for recycling in metal containers.

12.3.2. Place all containers storing hazardous liquid materials within secondary containment. Label the container with a hazardous waste label which identifies the hazard, type of material being stored (i.e., pipettes, paper towels, etc.), the accumulation start date, and the laboratory of origin.

12.3.3. Open the waste container only for the time necessary to add the waste.

12.4. Unused samples.

12.4.1. Return unused sample to the Sample Management section for disposal.

13. Source Material

13.1. ASTM Method D4059-91, "Standard Test Method for Analysis of Polychlorinated Biphenyls in Insulating Liquids by Gas Chromatography," April 1991.

13.2. "Hazardous and Mixed Waste," Administrative Requirement 10-3, in *Environment, Safety, and Health Manual*, Los Alamos National Laboratory Manual, Chapter 1 (most recent edition).

POLYCHLORINATED BIPHENYLS (PCBs) IN WATER: SOLVENT EXTRACTION – GC/ECD

Analyte: Polychlorinated biphenyls	**Method No.:** EO430
Matrix: Water and miscellaneous liquids	**Minimum Detection Limit:** 0.5 μg/L
Procedure: Hexane extraction by sonication followed by capillary gas chromatography with electron capture detection	
Effective Date: 08/01/91	**Author:** Jeff Roberts

SAFETY NOTE: Before beginning this procedure, read all of the Material Safety Data Sheets for the chemicals listed in Sec. 7. Read Sec. 4.3 of the EM-9 Safety Manual for information on personal protective clothing and equipment. Read Sec. 12 of this procedure and Source Material 13.2 for proper waste disposal practices.

1. Principle of Method

1.1. This method is applicable to the determination of the following analytes:

Analyte	Chemical Abstract Service Registry Number
Arochlor 1016	12674-11-2
Arochlor 1221	11104-28-2
Arochlor 1232	11141-16-5
Arochlor 1242	53469-21-9
Arochlor 1248	12672-29-6
Arochlor 1254	11097-69-1
Arochlor 1260	11096-82-5
Arochlor 1262	37324-23-5

1.2. The applicability of this method for the determination of analytes other than those listed above must be demonstrated by the analyst.

1.3. Actual detection limits may vary from that listed above because detection limits are highly dependent upon chromatographic conditions and the unique matrix of any given sample.

1.4. This method is restricted to use by or directly under the supervision of analysts experienced in the use of gas chromatography and the interpretation of chromatographic data.

1.5. Although this procedure is designed to be detailed and comprehensive, it must be understood that situations may arise that require deviation from this procedure. This is particularly true of interpretation of chromatographic data. These deviations will be made at the discretion of the analyst and his/her supervisor and must be thoroughly documented.

2. Summary of Method

2.1. Samples are extracted into hexane using manual shakeout.

2.2. Sample cleanup and/or dilution is performed as necessary.

2.3. Samples are analyzed using a gas chromatograph and its associated data system.

2.4. Collected data is reviewed by a qualified analyst and Arochlors are identified and quantitated.

2.5. Applicable work is documented according to accepted laboratory operating procedures, and to satisfy all regulatory compliance requirements.

3. Sample Collection, Preservation and Storage

3.1. A 500 mL water sample is collected into a clean glass bottle and sealed with a Teflon lined lid. Samples are refrigerated without additional preservative.

3.2. Samples are placed in separate, sealed 500-mL glass bottles with a Teflon lined lid.

3.2. No preservation is required if the samples are submitted within 2 h of collection; otherwise the samples must be kept at 4°C.

3.3. Samples are kept refrigerated at 4°C until extracted and analyzed.

3.4. Samples must be extracted within 7 days of collection and the extracts must be analyzed within 40 days of extraction.

4. Interferences

4.1. Interference may be caused by contaminants in solvents, reagents, glassware, and other sample processing equipment that leads to either discrete artifacts or elevated baselines in gas chromatograms.

4.1.1. The use of high purity solvents and other chemicals will also help to minimize interference problems.

4.1.2. Scrupulous cleaning of glassware and other equipment will help to minimize interference problems.

4.1.3. Strict adherence to standard laboratory practices will help minimize analyst-generated interferences.

4.2. Matrix interferences pose a significant problem in PCB analyses. Each sample may be cleaned up and/or diluted before analysis as necessary.

5. Safety

5.1. The toxicity and carcinogenicity of chemicals used in this method have not been precisely defined. Each chemical should be treated as a potential health hazard, and exposure minimized. Each person using this procedure must know where the Material Safety Data Sheets (MSDSs) are located and must have read them before use. The MSDS for each chemical used must be posted in a clearly marked envelope secured to the left wall inside the fume hood.

5.2. PCB products have been tentatively classified as known or suspected human or mammalian carcinogens. Pure standard materials and stock standard solutions of these compounds should be handled with gloves inside a fume hood.

5.3. Since the chemical composition of the samples is unknown, all samples must be considered potentially hazardous and must be handled and extracted in a fume hood.

5.4. The gas chromatograph (GC) system must be vented into a hood.

5.5. All gas cylinders must be secured, fitted with the proper regulators and fittings, and located outside the building in a secured area.

5.6. Two waste containers must be available for the disposal of PCB contaminated waste. One container must be for waste containing <500-ppm PCBs, and the other for waste containing >500-ppm PCBs. These waste containers will be properly labeled and will be disposed of by EM-7.

5.7. The laboratory will have an eye wash station that is flushed at least monthly for a minimum of 3 min. The date of the flushing and the name or initials of the person performing the flushing will be recorded.

5.8. The laboratory will have safety glasses available for all persons present in the laboratory, including guests. Safety glasses must be worn at all times by any personnel present beyond the leading edge of the fume hood, and by each person anywhere in the laboratory whenever operations requiring safety glasses are being performed by anyone in the laboratory.

5.9. The laboratory will provide employees with protective aprons or lab coats and protective gloves that are suitable for the chemicals used. These are to be worn whenever the possibility of contact with samples or chemicals exist.

5.10. No one is allowed to perform laboratory work unless at least one other person is present in the immediate vicinity who is aware that laboratory work is being performed.

6. Apparatus

6.1. Analytical balance: with accuracy to 0.0001 g.

6.2. Pasteur pipettes: 5-in., disposable.

6.3. Volumetric pipette: 10-mL with automatic dispenser.

6.4. Microliter syringes: assorted sizes.

6.5. Volumetric flasks: 1- to 25-mL with ground glass stoppers.

6.6. Sonicator bath.

6.7. Automatic liquid sampler (ALS) vials: 1-mL with Teflon lined crimp-seal caps.

6.8. Capping and uncapping device for ALS vials.

6.9. Gas chromatograph system, including:

- heated injection port,
- temperature programming capabilities,
- appropriate detection system,
- electronically controlled autosampler, and
- complete data system.

7. Reagents

7.1. Hexane: pesticide-grade or equivalent.

7.2. Acetone: pesticide-grade or equivalent.

7.3. Iso-octane: pesticide-grade or equivalent.

7.4. Stock standard solutions.

7.4.1. Prepare stock standard solutions within a concentration range of 20-50 mg/L. This may be accomplished by diluting a certified solution or by accurately weighing the neat material and diluting to volume with hexane or iso-octane. If the purity of the neat material is assayed to be 96% or greater, the weight can be used without correction to calculate the concentration of the stock standard solution.

7.4.2. Transfer the stock standard solutions into Teflon-sealed screw-cap glass bottles and store at 4°C. These standards may be kept for up to one year.

7.5. Secondary (calibration, working) standards.

7.5.1. Prepare calibration standards at a minimum of five concentration levels for each parameter of interest by dilution of the stock standards with hexane. One of the concentrations should be at or near the method detection limit (MDL). The subsequent standards should define the working linear range of the GC. Add a surrogate, 2,4,5-tribromobiphenyl, to each of the secondary standards at a level of 260 μg/L.

7.5.2. Transfer the secondary standards to a Teflon-sealed screw-cap glass bottle and store at 4°C. Secondary standards may be kept for up to six months.

7.6. Surrogate standard.

7.6.1. The surrogate compound used is 2,4,5-tribromobiphenyl. Add the surrogate to every sample run to monitor the performance of the extraction, cleanup, and analytical systems. Prepare the surrogate standard at a level of 2.6 mg/L. The surrogate will be spiked in each matrix to give a final concentration of 260 mg/L.

8. Calibration

8.1. Gas chromatographic conditions are established in accordance with the requirements of the individual analyst. The following criteria must be met:

- sufficient resolution to allow accurate quantitation and accurate identification;
- sufficient sensitivity to allow accurate quantitation to the MDL; and
- sufficient ability for the system to thermally clean itself to minimize sample carryover and/or elevated baselines.

8.2. External standard calibration procedure.

8.2.1. Analyze at least five concentrations for each Arochlor. Quantitate the individual Arochlors either by summing the total areas of the patterns or by specifying a minimum of four peaks per individual Arochlor pattern. The calibration range will be defined from at or near the method detection limit to the upper linear range of the detection system.

8.2.2. Calculate a calibration curve for each chosen peak or for each grouped pattern. Each curve will have a minimum correlation coefficient of 0.995 using a least squares regression. The calibration curves must be of the first-order linear type, with the origin forced through zero. Alternatively, the analyst can calculate the response factor for each peak or group at each level and determine the average response factors. If the percent relative standard deviation for each analyte is less than 20%, assume the curve is linear over the calibration range with the origin at zero. The average response factor can then be used for quantitation.

8.3 Continuing calibration.

8.3.1. Verify the working calibration curve each working day by measuring of one calibration standard for each Arochlor being quantitated.

8.3.2. The calculated value of the continuing calibration standard must be within 15% of the true value. If it does not meet this criterion, analyze a fresh aliquot of the standard. If the standard still does not meet this criterion, recalibrate the GC for that Arochlor.

9. Quality Control

9.1. Each analytical request must contain at least one quality control (QC) sample for every 10 samples or be batched with another set that contains a QC. In order to be considered a batch, all samples must be extracted and analyzed at the same time.

9.2. Quality control results must fall within specified limits. If they do not, determine the cause of the problem and correct it whenever possible, reanalyzing associated samples as necessary. If it is not possible to reanalyze the samples, document the reason for the QC failure and the inability to repeat the analysis on the report.

9.3. A blank must be prepared and analyzed with each extraction batch. This is accomplished by taking a 500-mL aliquot of deionized water and processing it through the method in exactly the same manner as the samples and QCs.

10. Procedure

10.1. Cleaning of glassware and equipment.

10.1.1. Glassware and other equipment that will come into direct with samples, standards, or reagents must be scrupulously clean in order to minimize contamination and interference problems.

Unused vials, glass bottles, caps, and lids need not be washed before use. All previously used glassware and equipment is cleaned immediately after use by thoroughly rinsing with hexane or with the last solvent used in the glassware. This rinse is followed by washing with hot water and detergent, rinsing thoroughly with tap water and distilled water, and then rinsing generously with acetone. Glassware is allowed to dry in the hood and then dried in a 150°C oven for 1 h.

10.2. Sample extraction.

10.2.1. Measure 500 mL of sample in 1-L graduated cylinder. Transfer to a 1-L separatory funnel. Mark the sample number on the separatory funnel with a waterproof pen.

10.2.2. Add 5 mL of hexane to the water in the separatory funnel. Swirl gently for approximately 15 s before stoppering the funnel.

10.2.3. Stopper the funnel, invert, and open the stopcock quickly but carefully.

10.2.4. Close the stopcock, shake for 30 s, vent through the stopcock, and shake for an additional 2 min. Remove the stopper.

10.2.5. Allow the mixture to separate for 5-10 min. Draw off the aqueous (bottom) layer. Carefully place the hexane layer into a small vial labeled with request number, sample number, and date of extraction.

NOTE: At this point it is acceptable to have water, emulsion, and hexane in the vial.

10.2.6. Centrifuge the sample if necessary to separate the hexane layer.

10.3. Spike the sample with an amount of surrogate solution that will give a concentration of the surrogate equal to 260 μg/L.

10.4. If subsequent analysis shows significant matrix interferences, cleanup may be necessary. Accepted cleanup methods are treatment with concentrated sulfuric acid and/or running the sample through a Florisil column. Subject all associated quality control samples to whichever cleanup procedure is chosen.

10.5. Identification of PCBs.

10.5.1. Compare sample chromatograms with standard Arochlor chromatograms to determine which, if any, Arochlors are present in the sample. Determine which Arochlor or combination of Arochlors, and in what proportion, will produce a chromatogram most similar to that of the sample.

PCBs tend to degrade with age. This may cause the loss of certain peaks, particularly the earlier eluting peaks which represent the lower molecular weight compounds. This can make identification more difficult, particularly if the analyst is not aware of this phenomenon.

Because of the difficulties involved in the identification of these multicomponent residues, final judgments should not be left to an inexperienced analyst.

11. Quantitation

11.1. Separately quantitate each peak using the curve established earlier. Alternatively, the sum of the peak areas may be used to calculate the concentration of the compounds of interest.

11.2. Average the calculated values for each peak in a given Arochlor to give the extract concentration in μg/mL. Eliminate obvious outliers before averaging.

NOTE: If the calculated values for each peak appear to vary greatly, it may indicate that the Arochlor was incorrectly identified.

11.3. Multiply the resulting number by the volume of solvent used in the extraction procedure (normally 5 mL) and divide by the sample volume (normally 0.500 L). Adjust for dilution if necessary.

$$C = \frac{C_e \times V_s}{V \times D} ,$$

where C = concentration of analyte (μg/L),
C_e = concentration in extract (μg/mL),
V_s = volume of extraction solvent (mL),
V = sample volume (L),
D = dilution factor, and
0.1 = dilution.

A sample calculation, assuming an initial sample volume of 500 mL, 5 mL of extraction solvent, a dilution of 100 μL of extract to 1 mL total volume (a 0.1 dilution), and a calculated concentration in the extract of 0.76 μg/mL, gives an analyte concentration of 76 μg/sample:

$$C = \frac{0.76\ \mu g/mL \times 5\ mL}{0.500\ L \times 0.1} = 76\ \mu g/L$$

12. Proper Waste Disposal Practices

12.1. General waste management.

12.1.1. Each analyst in the section must receive Waste Generator training from EM-8 within 90 days of the date of hire.

12.1.2. Wherever possible, minimize the generation of waste through reduction, reuse, or recycling. Wherever possible, segregate containers to reflect the nature of the hazardous waste and the eventual waste disposal methods. For example, segregate chlorinated solvent wastes from flammable, nonchlorinated solvents and >50-ppm contaminated waste. This is especially important in analysis areas where the waste generated is considered to be mixed waste.

12.1.3. Categorize the waste using an EM-8 Waste Profile Form.

12.1.4. Upon completion of the Waste Profile Form, dispose of the waste by completing a Waste Disposal Request Form from EM-7. Approximately 30 days is required for the disposal of waste after the completion of the listed forms.

12.2. Solid waste.

12.2.1. Accumulate solid hazardous wastes, such as contaminated paper towels, pipettes, spent syringes, and glass vials, in a covered plastic container lined with a plastic bag. Label the container with a hazardous waste label which identifies the hazard, type of material being stored (i.e., pipettes, paper towels, etc.), the accumulation start date, and the laboratory of origin.

12.2.2. Open the waste container only for the time necessary to add the waste.

12.3. Liquid waste.

12.3.1. Accumulate liquid wastes, such as spent samples and spent solvents that are not reusable, in glass or steel containers appropriate for the type of sample being stored. For example, store caustic materials in glass containers and spent solvents that are not bound for recycling in metal containers.

12.3.2. Place all containers storing hazardous liquid materials within secondary containment. Label the container with a hazardous waste label which identifies the hazard, type of material being stored (i.e., pipettes, paper towels, etc.), the accumulation start date, and the laboratory of origin.

12.3.3. Open the waste container only for the time necessary to add the waste.

12.4. Unused samples.

12.4.1. Return unused sample to the Sample Management section for disposal.

13. Source Material

13.1. ASTM Method D3304-77, "Standard Test Method for Analysis of Environmental Materials for Polychlorinated Biphenyls," July 1977.

13.2. "Hazardous and Mixed Waste," Administrative Requirement 10-3, in *Environment, Safety, and Health Manual*, Los Alamos National Laboratory Manual, Chapter 1 (most recent edition).

SEMIVOLATILE ORGANICS IN SOLID MATRICES: SOLVENT EXTRACTION – GC/MS

Analytes: Base Neutral/Acid Extractables (BNAs)	**Method No.:** EO500
Matrix: Soil, sediment, and sludges	**Minimum Detection Limit:** 330.0-660.0 μg/kg nominal (matrix dependent)
Procedure: Extraction and concentration of analytes with an appropriate solvent followed by capillary column GC/MS analysis.	**Accuracy and Precision:** These parameters are analyte dependent and are greatly influenced by the nature of the matrix.
Effective Date: 10/01/90	**Authors:** Martin W. Koby Matthew Monagle

SAFETY NOTE: Before beginning this procedure, read all of the Material Safety Data Sheets for the chemicals listed in Sec. 8. Read Sec. 4.3 of the EM-9 Safety Manual for information on personal protective clothing and equipment. Read Sec. 17 of this procedure and Source Material 18.4 for proper waste disposal practices.

1. Principle of Method

1.1. Analytes are extracted from various matrices with methylene chloride. Extracts are then concentrated to a small final volume (typically 1.0 mL), cleaned by alumina and/or gel permeation chromatography, and analyzed by gas chromatography/mass spectrometry. The mass spectrometer is operated in a scanning, electron impact (EI) ionization mode. The gas chromatograph is temperature programmed to effectively separate the wide range of analytes.

Analytes from a wide variety of compound classes can be determined using this method. Table X lists the compounds in the current Hazardous Substance List which are analyzed on a routine basis. Table XI contains the Appendix 9 list of compounds that are analyzed on a non-routine basis. Table XII is a list of compounds that could be incorporated into an analysis if necessary. (Tables IX-XII are found at the end of this procedure.)

1.2. Qualitative analysis is performed by comparing retention time and mass spectral data of unknowns to those of a standard mix for which the analytical system has been calibrated. USEPA-defined criteria (Source Material 18.2) are used to establish the validity of a compound identity.

1.3. Quantitation is achieved using the internal standard technique. Once the identity of a compound is determined, quantitation is based on the integrated abundance of a characteristic ion for that compound. This value is compared to the characteristic ion area of the internal standard nearest the retention time of the compound such that a ratio between the two can be determined. Additional factors taken into account include the response factor of the compound being measured, the final volume of extract, and the sample aliquot extracted.

2. Sensitivity

2.1. Practical limits of quantitation are generally in the range of 330.0 μg/Kg to 660 μg/Kg for low-level solid matrices. Matrices that are relatively free of interferences have lower attainable limits of detection than those having large amounts of coextractible material, such as drum waste. Medium-level extracts have a nominal detection limit of 20,000 μg/kg.

2.2. The values in Step 2.1 are analyte dependent and can be greatly influenced by matrix constituents, sample inlet conditions, and general analyte reactivity. Response factors for standards tend to show linearity to 180 μg/mL; however, specific compounds may show decreasing chromatographic performance or detector saturation at this concentration.

3. Accuracy and Precision

3.1. Based upon surrogate and spike data, analyte recoveries are typically in the 60-110% range. Recoveries can be expected to vary depending upon the analyte and matrix complexity.

3.2. Long-range precision data is based upon matrix spike and spike duplicate percent recovery and the relative percent difference between the two. Refer to Section 15, Table VIII.

4. Interferences

4.1. Any material that will cause an increase in background signal or elevated baseline or result in discrete chromatographic peaks which are not attributable to target compounds may interfere with the identification and quantitation of a given analyte. Examples are environmental matrices containing high concentrations of humic material, oils, hydrocarbons, lipids, sulfur, or polar material such as alcohols and carboxylic acids.

4.2. Excessive particulate matter in water, extreme alkalinity or acidity, reactive material, intense light, and high temperature can negatively effect analyte recovery.

5. Sample Collection and Storage

5.1. All sampling equipment should be free of introduced contaminants.

5.2. Soil or sediment samples are typically collected in amber or clear glass wide-mouth bottles. Caps should have Teflon liners; however, aluminum foil can be substituted for Teflon if necessary. Excessive headspace should be avoided.

5.3. Samples should be stored, unpreserved, in a refrigerator at 4°C until extraction is initiated.

6. Sample holding times

6.1. Soil or sediment samples must be extracted within 14 d of receipt.

6.2. Sample extracts must be analyzed within 40 d of extraction.

7. Apparatus

7.1. Gas chromatograph/mass spectrometer: GC capable of temperature programming from 25-300°C. The mass spectrometer, using electron impact ionization, must be capable of scanning a mass range of 35-500 AMU in 1.0 s or less.

7.2. Data system: capable of initiating and controlling data acquisition, storing spectral and chromatographic data, and performing mass spectral library searches.

7.3. Chromatographic column: 5% methyl phenyl silicone, 30-m x 0.25-mm-i.d. x 0.5-micron film thickness, J & W DB-5.625 or equivalent.

7.4. Semiautomated gel permeation chromatograph (GPC): capable of uninterrupted multiextract processing. GPC Autorep model 1002B, Analytical Biochemistry Laboratories, Inc. The column packing material used for this application is 70 g of 3% crosslinked styrene divinyl benzene (SX-3 BioBeads, Biorad Corp.).

7.5. Electronic balance: capable of measurement to three decimal places.

7.6. Ultrasonic processor: 300 watt, capable of operating in a pulsed or continuous mode.

7.7. Refrigerated recirculating heat exchanger: Neslab Coolflow CFT-33 or equivalent.

7.8. Ultracentrifuge: with rotor capable of holding six 250-mL bottles.

7.9. Nitrogen evaporation apparatus with multiple sample capacity: Organomation N-EVAP, Model 111 or equivalent.

7.10. Concentric ring steam table: 4- or 8-hole, Boekel, Inc. or equivalent.

7.11. Automated evaporative concentrator: Zymark Turbovap or equivalent may be substituted for items 7.9 and 7.10.

7.12. Kuderna-Danish concentrators: consisting of 500-mL flask, 15-mL calibrated receiver tube, and three-ball Snyder column.

7.13. Condensers: glass, 300-mm jacket, Allihn bulb type with 55/50 ground glass joint.

7.14. Soxhlet extractors: with 55/50 and 24/40 joints and coarse frit glass extraction thimbles. Typically rated at 8 cycles/h. Fiber thimbles may be substituted for glass in instances where samples are characterized as having a high radiation hazard.

7.15. Glass filtering funnels.

7.16. Centrifuge bottles: 250-mL, heavy wall.

7.17. Round bottom flasks: 500-mL, glass, 24/40 joint.

7.18. Beakers: glass, 100-, 150-, 250-, 400-, and 600-mL capacity.

7.19. Glass vials: 1.8-mL crimp cap, 1.8-, 7-, 10-, 12-, 15-, and 40-mL capacity screw cap with septa.

7.20. Volumetric glassware: 1-, 2-, 5-, 10-, 25-, 50-, 100-, and 250-mL with stoppers.

7.21. Disposable glass pipettes: 1-, 2-, 5-, and 10-mL.

7.22. Adjustable low-volume pipettors: 10- and 250-μL capacity with disposable capillary tips. SMI brand or equivalent.

7.23. Syringes: glass, gas-tight, 10-, 25-, 50-, and 100-μL volume.

7.24. Heating mantles: 500-mL, Glas-col STM or equivalent.

7.25. Teflon boiling stones.

7.26. Glass wool.

7.27. Jack stands: 6 in. by 6 in.

7.28. Aluminum foil.

7.29. Oven: capable of being heated to 500°C.

7.30. Muffle furnace: capable of being heated to 900°C.

8. Reagents

8.1. Methylene chloride (Baker Resi-analyzed).

8.2. Acetone (Baker Resi-analyzed).

8.3. Methanol (HPLC-grade).

8.4. Hexane (pesticide-grade).

8.5. Reagent water (deionized). Charcoal filtered and/or distilled water demonstrated to be free from interferences.

8.6. Sodium sulfate (granular). Muffle overnight at 400°C. Alternatively, it can be Soxhlet-extracted with methylene chloride before use. Store in a covered container.

8.7. Sulfuric acid (diluted 1:1 with reagent water). While mixing, slowly add 500 mL of concentrated sulfuric acid to 400 mL of reagent water in a 1-L volumetric flask. Allow to cool to room temperature and dilute to volume. Store in a properly labeled covered container.

8.8. Sodium sulfate (10 N). Slowly add 40.0 g granular Na_2SO_4 to reagent water in a 100-mL volumetric flask while mixing. Allow to cool and dilute to volume. Store in a properly labeled covered container.

8.9. Alumina (Woelm Neutral Super I, ICN brand). Muffle for 4 h at 140°C and store in a desiccator before use. Deactivate to activity level III by adding 7% water (vol/wt) and shaking on a wrist action shaker for 2 h.

8.10. Bio Beads (SX-3). Soak 70 g in methylene chloride overnight to facilitate swelling of the resin. Pack the column, establish flow and pressure, and allow to equilibrate with CH_2Cl_2 for 24 h before calibration and use.

9. Standards

9.1. All analytical standards are refrigerated at -20°C. Working standards typically have a shelf life of three months. Stock standards are considered usable for at least six months or until degradation becomes apparent.

The analytical standards listed in the following sections are specified by EPA protocol to be used in the analysis of base/neutral acid extractables. They are readily available from any number of chemical suppliers as neat standards or as stock solutions. Currently, we use standard mixes formulated by Ultra Scientific, Inc.

9.2. Surrogate compounds. The surrogates closely resemble target compounds chemically but are not normally encountered in nature. Before extraction, each sample is fortified with a known concentration of surrogate mix. Evaluating surrogate recoveries gives a measure of the method efficiency relative to any given matrix.

9.2.1. Base/neutral surrogate standard mix (1000 μg/mL in CH_2Cl_2). This formulation contains the following compounds:

Nitrobenzene-d_5
2-Fluorobiphenyl
Terphenyl-d_{14}

9.2.2. Acid surrogate standard mix (2000 μg/mL in methanol). This formulation contains the following compounds:

2-Fluorophenol
Phenol-d_5
2,4,6-Tribromophenol

9.2.3. BNA surrogate working standards are prepared by diluting each mix 1:20 with methanol in the same volumetric flask. This results in a final concentration of 50 or 100 ppm of base neutral/acid components, respectively.

9.3. Matrix spike compounds. These compounds are used to document analytical precision and accuracy, the objective being to identify trends in method performance on both a long- and short-term basis. Known concentrations of spike material are added to duplicate representative samples before extraction. Matrix spike and matrix spike duplicate data is generated once for every 20 samples extracted.

9.3.1. Base/neutral matrix spike solution (1000 μg/mL in CH_2Cl_2). This formulation contains the following components:

Acenaphthene
1,4-Dichlorobenzene
2,4-Dinitrophenol
N-Nitroso-di-n-propylamine
Pyrene
1,2,4-Trichlorobenzene

9.3.2. Acid matrix spike solution (2000 μg/mL in methanol). This formulation contains the following components:

4-Chloro-3-methylphenol
2-Chlorophenol
4-Nitrophenol
Pentachlorophenol
Phenol

9.3.3. Working standards of matrix spiking solutions are made by diluting each stock 1:20 with methanol in the same volumetric flask. Final concentrations are 50/100 ppm base neutral/acid respectively.

9.4. Internal Standards (ISs). The IS compounds are added to extracts immediately before instrumental analysis. They are used to facilitate both qualitative and quantitative analysis. Extracts are spiked with an IS mix such that a final concentration of 40 μg/mL of each component is obtained.

9.4.1. Internal standard mix (4000 μg/mL or 2000 μg/mL in CH_2Cl_2, depending on the supplier). This mix is used undiluted and is spiked into the samples, blanks, and all calibration standards so that a final concentration of 40 μg/mL is obtained. Internal standards are:

1,4-Dichlorobenzene-d_4
Naphthalene-d_8
Acenaphthene-d_{10}
Phenanthrene-d_{10}
Chrysene-d_{12}
Perylene-d_{12}

9.5. Decafluorotriphenylphosphine (DFTPP). DFTPP is used to verify the performance of the mass spectrometer. The DFTPP spectrum must meet established EPA ion abundance criteria before calibrating the instrument and analyzing samples. The working Standard DFTPP concentration is 50 μg/mL in CH_2Cl_2.

9.6. Initial calibration standards. These standards contain all target compounds of interest at five different concentrations. Typically, these are 20.0, 50.0, 80.0, 120.0 and 160.0 μg/mL of each analyte. The standards are made by volumetric dilution of 2000-μg/mL stock standards with methylene chloride. Appropriate amounts of internal standards and surrogate are included.

9.7. Daily calibration standards. These standards contain 50.0 μg/mL of all target compounds of interest in methylene chloride. They are used to demonstrate instrument stability in terms of analyte response (response factor) and relative retention time.

9.8. Alumina equivalency standard. This standard is prepared in the same manner as the BNA surrogate working standard except 50:50 hexane/acetone is used as the solvent. It is used to evaluate the efficiency of the alumina column cleanup when used.

9.9. Table I is a list of all working standard mixes.

TABLE I. BASE/NEUTRAL ACID WORKING STANDARDS

Standard name	Components	Conc. (μg/mL)	Solvent
BNA surrogate mix	2-Fluorophenol	100.0	Methanol
	Phenol-d_5	100.0	
	Nitrobenzene-d_8	50.0	
	2-Fluorobiphenyl	50.0	
	2,4,6-Tribromophenol	100.0	
	Terphenyl-d_{14}	50.0	
BNA matrix spike mix	Phenol	100.0	Methanol
	2-Chlorophenol	100.0	
	1,4-Dichlorobenzene	50.0	
	N-Nitroso-di-n-propylamine	50.0	
	1,2,4-Trichlorobenzene	50.0	
	4-Chloro-3-methylphenol	100.0	
	Acenaphthene	50.0	
	4-Nitrophenol	100.0	
	2,4-Dinitrotoluene	50.0	
	Pentachlorophenol	100.0	
	Pyrene	50.0	
Internal standard mix	1,4-Dichlorobenzene-d_4	40.0	Methylene chloride

TABLE I. (cont)

Standard name	Components	Conc. (μg/mL)	Solvent
	Naphthalene-d_8	40.0	
	Acenaphthene-d_{10}	40.0	
	Phenanthrene-d_{10}	40.0	
	Chrysene-d_{12}	40.0	
	Perylene-d_{12}	40.0	
DFTPP	Decafluorotriphenylphosphine	50.0	Methylene chloride
Initial calibration mix	See Tables XI and XII	20.0 50.0 80.0 120.0 160.0	Methylene chloride
Daily calibration mix	See Tables XI and XII	50.0	Methylene chloride
Alumina equivalency standard	See BNA surrogate mix	50/100	50% Hexane/ acetone

10. Sample Extraction.

10.1. Extracting low-level BNAs from soils, sediments, and other solid matrices using soxhlet extractor.

CAUTION: These procedures use large quantities of methylene chloride, a suspected carcinogen. Wear appropriate personal protective equipment, use safe work practices, and perform all procedures in a fume hood.

10.1.1. All glassware should be rinsed with methylene chloride and air dried before use. Assemble Soxhlet extractors, including two pads of glass

wool in the thimbles, and clean by refluxing several hours. Discard the methylene chloride contained in the round bottom flasks and replace with 300 mL of fresh methylene chloride and several Teflon boiling stones.

10.1.2. If any standing water is present in the sample container, decant it before homogenizing the sample. If the quantity of water is sufficient it may be treated as a separate sample, depending upon the needs of the customer.

10.1.3. Avoiding rocks >2-mm-diam, grass, twigs, and other interfering material, weigh 30.0 g of homogenized sample into a 150-mL beaker. Add 60.0 g of granular sodium sulfate and mix thoroughly, using a stainless-steel spatula. If the sample has significant moisture, additional Na_2SO_4 should be added. The sample should flow readily and have a grainy texture when sufficient sodium sulfate has been added.

10.1.4. If the sample has an oily appearance or strong organic/petroleum odor, extract a reduced aliquot. This will result in higher reported limits of quantitation.

10.1.5. If the analyte concentrations are to be reported on a dry-weight basis, determine the percent moisture. Tare an aluminum weigh boat or pan, add approximately 10 g of moist soil, weigh, and dry overnight at 105°C. Reweigh the sample and calculate the percent moisture from the weight loss upon drying.

10.1.6. Transfer the sample and Na_2SO_4 mixture to the extraction thimble, leaving one of the glass wool pads between the sample and thimble frit. Place the other glass wool pad on top of the sample after the necessary surrogate and spike standards have been added.

10.1.7. Fortify all samples, blanks, and matrix spikes with 1.0 mL BNA surrogate standard mix by adding it directly to the sample surface. Similarly add 1.0 mL of BNA spike mix to the matrix spike and matrix spike duplicate samples.

10.1.8. Attach condensers to the Soxhlet extractors, turn on the heating mantles, and reflux for 18 h. Ensure that extractors are siphoning properly and that no leaks exist.

10.1.9. When extraction is complete, allow the round bottom flask to cool. Tilting the extractor will allow methylene chloride remaining in the Soxhlet to siphon into the round bottom flask.

10.1.10. Remove the round bottom flask, cover, and refrigerate until the extract can be concentrated as described in Section 11.

10.2. Extracting low-level BNAs from soils, sediments, and other solid matrices using a high-energy ultrasonic processor.

This is the preferred alternative to the preceding method, Section 10.1, when radioactivity is not a concern.

10.2.1. Rinse all glassware with solvent before use.

10.2.2. Decant any standing water from the sample before homogenizing. If sufficient water is present it may be saved and treated as a separate sample, otherwise discard it. Weigh 30.0 g of sample into a 250-mL heavy-wall centrifuge bottle. Add 60 g of sodium sulfate and mix thoroughly, using a stainless-steel spatula. If the sample forms a hard crust, additional Na_2SO_4 should be added. The sample will have a grainy texture and flow easily when sufficient Na_2SO_4 has been added. Avoid stones with a diameter >2 mm, twigs, grass, and any other interfering material when taking an aliquot.

10.2.3. Add 100 mL of methylene chloride to each centrifuge bottle.

10.2.4. Fortify each sample, blank, and matrix spike sample with 1 mL of BNA surrogate mix using a disposable pipet. Similarly add BNA matrix spiking solution where necessary. Ensure that the pipette tip is below the surface of the solvent and stir thoroughly.

10.2.5. Tune the ultrasonic processor according to the maufacturer's specifications.

10.2.6. Sonicate each sample using a 50% duty cycle, pulsed mode, for 2 min.

10.2.7. Centrifuge each sample and decant the solvent into a 500-mL Erlenmeyer flask or a 400-mL beaker.

10.2.8. Repeat the sonication and centrifugation steps two more times using additional 100-mL aliquots of methylene chloride. Combine the extracts and record the approximate volumes of solvent recovered.

10.2.9. Cover extracts and refrigerate until ready to proceed with concentration, Section 11.

10.3. Extracting low-level BNAs and organochlorine pesticides from soil/sediment.

EPA Contract Laboratory Program (EPA-CLP) semivolatile analytical protocol allows for the simultaneous extraction of base/neutral acid extractables, PCBs,

and organochlorine pesticides. Once the extract has been concentrated to 10 mL it is split and further manipulated to enable analysis for organochlorine pesticides and PCBs by GC/ECD and GC/MS.

10.3.1. All glassware should be rinsed with solvent before use.

10.3.2. Decant any standing water from the sample before homogenizing. If sufficient water is present it may be saved and treated as a separate sample, otherwise discard it. Weigh 30.0 g of sample into a 250-mL heavy-wall centrifuge bottle. Add 60 g of granular sodium sulfate and mix thoroughly using a stainless-steel spatula. If the sample forms a hard crust additional Na_2SO_4 should be added. The sample will have a grainy texture and flow easily when sufficient Na_2SO_4 has been added. Stones with a diameter >2 mm, twigs, grass, and any other interfering material should be avoided when taking a sample aliquot.

10.3.3. Add 100 mL of 50:50 acetone in methylene chloride to each centrifuge bottle.

10.3.4. Fortify each sample, blank, and matrix spike sample with 1 mL BNA surrogate mix,using a disposable pipet. Add BNA matrix spiking solution where necessary. Ensure that the pipet tip is below the surface of the solvent and stir thoroughly.

10.3.5. In an identical manner, add pesticide surrogate and spike mixes where appropriate.

10.3.6. Tune the ultrasonic processor according to the manufacturer's specifications.

10.3.7. Sonicate each sample using a 50% duty cycle, pulsed mode, for 2 min.

10.3.8. Centrifuge each sample and decant the solvent into a 500-mL Erlenmeyer flask or a 400-mL beaker.

10.3.9. Repeat the sonication and centrifugation steps two more times using additional 100-mL portions of 50:50 acetone in methylene chloride. Combine the extracts and record approximate volumes of solvent recovered.

10.3.10. Cover extracts and refrigerate until ready to proceed with ample concentration, Section 11.

10.4. Extracting medium-level soil/solid screen using a high energy ultrasonic processor.

This method can be used when higher concentrations of analytes are present or to characterize the extractable components within a sample. Detection limits are generally in the 20,000 μg/kg range.

10.4.1. Rinse all glassware with solvent before use.

10.4.2. Decant any standing water from the sample before homogenizing. If sufficient water is present it may be saved and treated as a separate sample, otherwise discard it. Weigh 1.0 g of sample into a 40-mL VOA vial. Add 2.0 g of sodium sulfate and mix thoroughly, using a stainless-steel spatula. If the sample forms a hard crust additional Na_2SO_4 should be added. The sample will have a grainy texture and flow easily when sufficient Na_2SO_4 has been added. Stones with a diameter >2 mm, twigs, grass, and any other interfering material should be avoided when taking a sample aliquot.

10.4.3. Fortify each sample, blank, and matrix spike sample with 1 mL of BNA surrogate mix, using a disposable pipette. Similarly add 1 mL of BNA matrix spiking solution where necessary.

10.4.4. Add 9.0 mL of methylene chloride to all sample vials except the matrix spikes, which receive 8.0 mL. The total volume of solvent in each vial should equal 10.0 mL.

10.4.5. Tune the ultrasonic processor according to the maufacturer's specifications.

10.4.6. Sonicate each sample for 1 min using a continuous operation mode.

10.4.7. Loosely pack 3 cm of glass wool into a Pasteur pipette. Filter the extract through the glass wool and collect 5 mL in a graduated receiver tube. Save the unfiltered portion for further analysis.

10.4.8. Using nitrogen evaporation techniques, concentrate the filtered extract to 1.0 mL if possible. Transfer to a 1.8-mL screw cap vial and analyze by GC/MS as directed in Section 14.

11. Concentration of Extracts from Low Level Soil Matrices

Traditional Kuderna-Danish (KD) and nitrogen blowdown techniques.

11.1. Rinse all glassware with solvent before use.

11.2. Attach a 15-mL receiver tube to a 500-mL KD flask and add one Teflon boiling stone.

11.3. Place a small pad of glass wool in the bottom of a glass funnel (Kimax 58 or equivalent). Add granular sodium sulfate until the funnel is 2/3 full and tap to settle. Pre-rinse the Na_2SO_4 with methylene chloride.

11.4. Quantitatively transfer the extract to the KD Concentrator by pouring it through the sodium sulfate. Complete the transfer by rinsing the extract container and the funnel with methylene chloride (approximately 20 mL).

11.5. Attach a three-ball Snyder column to the KD and place it on a hot water bath (75-90°C). Immediately pre-wet the Snyder column with several milliliters of methylene chloride to prevent sample bumping.

11.6. Concentrate the extract to an apparent volume of 1.0 mL and remove from heat. Do not permit the extract to go dry, because many analytes are sensitive to thermal decomposition. Allow the KD concentrator to drain and cool to ambient temperature before removing the Synder column.

11.7. Invert the Snyder column and rinse with a small amount (approximately 2.0 mL) of methylene chloride. Collect the rinse in the KD flask. Rinse the inside walls of the KD flask again with a small amount of methylene chloride. Collect in the receiver tube.

11.8. Place the receiver tube in a water bath that is near, but below, the boiling point of the solvent. Direct a gentle stream of dry nitrogen over the surface of the solvent. Periodically rinse the inside walls of the receiver tube with methylene chloride to prevent loss of analyte. Allow the extract to dry to an apparent volume of 0.5 mL then remove from the bath.

Occasionally an extract will stop evaporating, form a precipitate, or be highly colored. In these instances the extract should be concentrated to 10.0 mL and cleaned using gel permeation chromatography (GPC) (refer to Method EO520).

11.9. If the extract has evaporated to 0.5 mL, quantitatively transfer the extract to a 1.0-mL volumetric tube and dilute to volume with methylene chloride. Transfer the concentrated extract to a 1.8-mL screw cap vial which has been appropriately labeled. Refrigerate at 4°C until ready to analyze.

11.10. When a sample is being prepared simultaneously for BNAs and organochlorine pesticides, the initial extract should be concentrated to 10 mL and cleaned by GPC before splitting the extract. Refer to Method EO520.

12. Extract Split

Used for low-level BNAs and organochlorine pesticides in soils.

Following the procedure described in Section 11, concentrate the gross extracts to 10.0 mL methylene chloride. If the extracts are highly colored or contain large amounts

of coextracted interferences, they need to be cleaned by GPC according to Method EO520 before splitting. Once this has been done, proceed with this section.

12.1. With an SMI micropipette transfer 500 μL of the 10.0-mL extract to a receiver tube containing 5.0 mL of hexane and mix thoroughly. This is the pesticide fraction.

12.2. Using nitrogen blowdown, concentrate the remaining 9.5 mL to 0.95 mL of methylene chloride. This is the BNA fraction.

12.3. Complete the split and solvent exchange by concentrating the pesticide fraction to 0.5 mL.

NOTE: start evaporation with the bath temperature at 40°C. After 5 min, increase the temperature to 65°C and continue concentrating, occasionally rinsing the tubes with hexane.

12.4. Remove the receiver tubes from the bath and allow to cool. Add 0.5 mL of acetone to each tube to give a total volume of 1.0 mL. Clean the pesticide fraction by alumina column chromatography as described in Section 13.

13. Pesticide Fraction Cleanup

Alumina column chromatography. Adsorption chromatography relies on the ability of solid material to retain solute by surface adsorption. The adsorbed material can then be selectively eluted depending upon the organic solvent chosen, analyte solubility, and polarity.

A neutral alumina cleanup is used to remove the BNA surrogates from the pesticide fraction of extracts which have been split for BNA/OCP analysis.

13.1. Prepare Super I neutral alumina to activity III by adding 7% reagent water (vol/wt) to the alumina. In a tightly sealed glass container, shake on a wrist action shaker for 2 h or shake vigorously by hand for 5-10 min. No lumps should be present.

13.2. Loosely plug a 10-mL disposable glass pipette with glass wool. Add 3.0 g of activity III alumina and tap to settle. Do not pre-wet the alumina.

13.3. With a Pasteur pipette, add the entire 1.0 mL extract to the top of the alumina and immediately rinse the concentrator tube with 1.0 mL of hexane. Add this rinse to the alumina. Collect the eluate in another clean receiver tube. Continue eluting the alumina with 9.0 mL of hexane. Do not allow the column to go dry during addition and elution of the sample extract.

13.4. Concentrate the eluate to 1.0 mL using nitrogen blowdown techniques. Transfer the extract to an appropriately labeled 1.8-mL screw cap vial and refrigerate at 4°C until ready to analyze.

14. GC/MS Calibration

14.1. This application uses a slightly polar methyl silicone stationary phase bonded to a fused silica capillary column such as the J&W DB-5.625, Supelco SPB-5, or Quadrex 007-2. Column dimensions are nominally 30-m x 0.25-mm-id, 0.50-μm film thickness.

14.2. The following approximate gas chromatographic parameters are used for data acquisition:

Initial temp.: 35°C	Carrier: He
Initial time: 4.5 min	Flow: 1.0 mL/min
Final temp.: 290°C	Inlet temp.: 280°C
Final time: 15 min	Interface temp.: 300°C
Rate: 10°C/min	

Some variations are allowed for final temperature, final time, and flow rate, when they improve the chromatography or analytical performance.

14.3. DFTPP tuning.

14.3.1. The quadrupole mass spectrometer is operated in a scanning, electron impact ionization mode. The spectrometer is tuned with a calibration compound, perfluorotributylamine (PFTBA), so that a 50-ng injection of decafluorotriphenylphosphine (DFTPP) results in a spectrum which satisfies the key ion abundance and the resolution criteria listed in Table II.

TABLE II. KEY ION ABUNDANCE AND RESOLUTION CRITERIA

Mass	Ion abundance criteria
51	30.0-60.0% of mass 198
68	<2.0% of mass 69
70	<2.0% of mass 69
127	40.0-60.0% of mass 198
197	<1.0% of mass 198
198	base peak, 100% relative abundance
199	5.0-9.0% of mass 198

TABLE II. KEY ION ABUNDANCE AND RESOLUTION CRITERIA (cont)	
Mass	Ion abundance criteria
275	10.0-30.0% of mass 198
365	>1.00% of mass 198
441	present but less than mass 443
442	>40.0% of mass 198
443	17.0-23.0% of mass 442

14.3.2. Before any standards or samples are analyzed, these tuning criteria must be met and documented for each mass spectrometer used for this application. The criteria, once met, are valid for a 12-h period during which standards, samples, and blanks may be analyzed. At the end of the 12-h period, the DFTPP criteria must be met again before continued analysis.

14.4. Initial calibration.

14.4.1. Once the mass spectrometer is hardware-tuned, it must be initially calibrated with a minimum of five standard concentrations to demonstrate response linearity. Table III lists those analytes requiring only four initial calibration points. Analyze standards at concentrations of 20, 50, 80 120, and 160 μg/mL. The five-point calibration must meet the USEPA response factor criteria listed in Section 14.4.2.

TABLE III. COMPOUNDS REQUIRING A FOUR-POINT CALIBRATION USEPA-CLP SOW 2/88	
Benzoic acid	2,4-Dinitrophenol
2,4,5-Trichlorophenol	2-Nitroaniline
3-Nitroaniline	4-Nitroaniline
4-Nitrophenol	Pentachlorophenol
4,6-Dinitro-2-methylphenol	

14.4.2. Calculate response factors (RF) for all individual calibration compounds. The percent relative standard deviation (% RSD) for each compound should be less than 30% and must be less than 30% for all Calibration check compounds (CCC). See Table IV.

TABLE IV. CONTINUING CALIBRATION CHECK COMPOUNDS (CCC)

% RSD MUST BE <30.0	
Acenaphthene	4-Chloro-3-methylphenol
1,4-Dichlorobenzene	2,4-Dichlorophenol
Hexachlorobutadiene	2-Nitrophenol
N-Nitrosodiphenylamine	Phenol
Di-n-octyl phthalate	Pentachlorophenol
Fluoranthene	2,4,6-Trichlorophenol
Benzo(a)pyrene	

Response factors are calculated using the following equation:

$$RF = \frac{(Ax)\ (Cis)}{(Ais)\ (Cx)},$$

where Ax = area of the characteristic ion for the compound being measured,
Cis = concentration of the internal standard (ng/μL),
Ais = area of the characteristic ion for the nearest internal standard, and
Cx = concentration of the compound being measured (ng/μL).

Percent relative standard deviation is calculated using the following equation:

$$\%RSD = \frac{(SD)}{(RF)} \times 100$$

14.4.3. The minimum average response for system performance check compounds (SPCCs) must be 0.050 or greater. Table V contains a list of these compounds.

TABLE V. SYSTEM PERFORMANCE CHECK COMPOUNDS (SPCC) AVERAGE RF MUST BE >0.05
N-Nitroso-di-n-propylamine
Hexachlorocyclopentadiene
2,4-Dinitrophenol
4-Nitrophenol

14.4.4. Relative retention times of each compound from each standard should agree within 0.06 retention time units.

14.4.5. If the % RSD for any CCC, or the minimum RF for any SPCC is not met, corrective action must be taken. An individual calibration point or the entire calibration curve may need reanalysis.

14.5. Continuing calibration.

Each day, immediately after DFTPP criteria have been demonstrated, a continuing calibration standard containing 50 μg/mL of each target analyte is analyzed. The relative response factor for each analyte is compared with the corresponding average response factor obtained from the initial calibration.

14.5.1. Each continuing calibration must meet the criteria listed below:

14.5.1.1. All system performance check compounds must have a minimum response factor not less than 0.050. See Table V.

14.5.1.2. The percent difference between the continuing calibration relative response factor and the average relative response factor from the initial calibration must not be greater than 25.0% for any CCC. See Table IV for a list of these analytes. If this requirement is met, the calibration is assumed to be valid.

The percent difference is calculated using the following equation:

$$\% \text{ Difference} = \frac{RFi - RFc}{RFi} \times 100 ,$$

where RFi = average response factor from the initial calibration, and
RFc = response factor from the current continuing calibration.

14.5.1.3. The percent difference between the continuing calibration relative response factor and the average relative response from the initial calibration should not be greater than 20.0% for any target compound for which the instrument is calibrated. If the percent difference exceeds this value it is considered as a warning limit.

14.5.2. If the preceding calibration criteria are not met, corrective action is taken and the continuing calibration standard is reanalyzed. If the criteria are still not met, a new five-point initial calibration is performed.

14.5.3. Once all continuing calibration criteria have been met, the method ID file is updated with the current relative retention times (RRTs) and response factors (RFs) before acquiring and processing sample data.

14.5.4. The method ID file contains retention-time and mass-spectral data pertinent to a given target compound list. It is defined and edited by the user and resides on the GC/MS data system.

15. Quality Assurance and Data Interpretation Requirements

15.1. All calibration criteria listed in the previous section must be met before samples are analyzed.

15.2. Method blank analysis. A method blank is a volume of reagent water or a purified solid material which is taken through the entire analytical procedure. The weight or volume of the blank must approximate that of the samples being analyzed.

15.2.1. Blanks are analyzed at a frequency of once for every 20 samples of similar matrix or whenever samples are extracted by the same procedure, whichever is more frequent. The following criteria are checked immediately after blank analysis:

- The method blank should contain less than five times the practical quantitation limit (PQL) of phthalate esters in the target compound list.

- All other analytes present on the target compound list should not be present at concentrations greater than the PQL.

- Recovery of all surrogate compounds must be within specified limits (Table VI). If these criteria are not met, reanalyze or reextract another blank to determine whether the incident is isolated or an out-of-control status exists.

15.3. Surrogate spike requirements. Each sample prepared and analyzed for semivolatile compounds is fortified with known amounts of base-neutral and acid extractable compounds. By evaluating their recovery, measured as a percentage, the analyst can draw conclusions concerning the analytical efficiency on a sample-by-sample basis.

15.3.1. Surrogate spike recoveries are considered to be acceptable if they fall within the ranges specified in Table VI.

The following conditions indicate unacceptable surrogate recovery: (1) recovery of any one surrogate in either the base-neutral or acid fraction is less than 10% and (2) recoveries of any two surrogate compounds in either base-neutral or acid fraction are outside of recovery limits.

TABLE VI. BNA SURROGATE SPIKE RECOVERY LIMITS IN PERCENT

Surrogate Compound	Water	Soil
Nitrobenzene-d_5	35-114	23-120
2-Fluorobiphenyl	43-116	30-115
Terphenyl-d_{14}	33-141	18-137
Phenol-d_5	10-94	24-113
2-Fluorophenol	21-100	25-121
2,4,6-Tribromophenol	10-123	19-122

15.3.2. When surrogate spike recoveries are determined to be out of control, the analyst needs to determine if the cause is matrix- or process-dependent. Reextraction should be requested when there is sufficient sample and holding time can be met. Whichever conclusion is reached needs to be

addressed in the case narrative and/or anomaly summary. Corrective action will be implemented to alleviate the causes of the out-of-control condition.

15.4. Matrix spike and matrix spike duplicate recovery requirements. In order to evaluate the matrix effect of a sample upon the analytical methodology employed, known concentrations of base/neutral and acid target compounds are added to duplicates of a given sample. Table VII is a list of spike compounds. The sample chosen to be spiked should be representative of the samples from a given project. Reagent water is frequently used as a spiking medium for aqueous samples.

TABLE VII. BNA MATRIX SPIKE COMPOUNDS

Compound	Fraction	Amount added (μg)
1,2,4-Trichlorobenzene	BN	50
Acenaphthene	BN	50
2,4-Dinitrotoluene	BN	50
Pyrene	BN	50
N-Nitroso-di-n-propylamine	BN	50
1,4-Dichlorobenzene	BN	50
Pentachlorophenol	ACID	100
Phenol	ACID	100
2-Chlorophenol	ACID	100
4-Chloro-3-methylphenol	ACID	100
4-Nitrophenol	ACID	100

15.4.1. Matrix spike and matrix spike duplicate data are generated once for every 20 samples of a given matrix type prepared by the same method.

15.4.2. Matrix spike/matrix spike duplicates and the original unspiked sample must be concentrated to the same final volume and analyzed at the same dilution level. If high levels of target compounds are detected that are not matrix spike compounds, the original sample needs only to be diluted to enable compound quantitation.

15.4.3. Spike recovery is evaluated in terms of percent recovery and the relative percent difference (RPD) between individual spike compounds in the MS and MSD. This data can be used to evaluate the long-term precision and accuracy of the method. Table VIII lists spike recovery limits.

TABLE VIII. BNA MATRIX SPIKE RECOVERY LIMITS - SOIL

Compound	Percent recovered			RPD
1,2,4-Trichlorobenzene	38	-	107	23
Acenaphthene	31	-	137	19
2,4-Dinitrotoluene	28	-	89	47
Pyrene	35	-	142	36
N-Nitroso-di-n-propylamine	41	-	126	38
1,4-Dichlorobenzene	28	-	104	27
Pentachlorophenol	17	-	109	47
Phenol	26	-	90	35
2-Chlorophenol	25	-	102	50
4-Chloro-3-methylphenol	26	-	103	33
4-Nitrophenol	11	-	114	50

15.5. Blind spikes. It is EM-9 QA/QC policy to prepare and submit blind spikes on a regular basis as an independent check of method accuracy. Standard reference materials resemble submitted matrices as closely as possible.

15.6. Sample analysis. Samples can be analyzed upon successful completion of the calibration procedures addressed in Section 14. Sample data acquisition must be completed within the specified 12-h tune period using the conditions by which the standard was acquired. Samples must be analyzed within 40 d of sample extraction.

15.6.1. Internal standard response from each sample injection must agree within a factor of two (-50% to 200%) with the internal standard response from the most recent continuing calibration standard.

15.6.2. Sample internal standard retention times must not differ by more than 30 s from the continuing calibration standard.

15.6.3. Each analytical run is checked for detector saturation for each target compound positively identified.

15.6.4. All data is evaluated for correctness of dilution. When compounds are detected at concentrations greater than 160 ppm, the sample extracts are diluted and reanalyzed.

15.6.5. Discrete chromatographic peaks that are not identified as target compounds are treated as tentatively identified compounds (TICs). These compounds may be identified if the customer requests this service. A tentative identification is made by comparison of the unknown spectra to a mass spectral database.

15.7. Qualitative analysis.

15.7.1. Target compounds detected in sample injections are positively identified on the basis of relative retention time (RRT) and mass spectral criteria. Table IX is a list of analytes and their corresponding characteristic ions.

15.7.1.1. The sample component's relative retention time must agree within ±0.06 RRT units with that of the same component in the continuing calibration standard.

15.7.1.2. Qualitative verification requires the following conditions to be met:

- All ions present in the standard mass spectra at a relative intensity >10% must be present in the sample spectrum.

- The relative intensities of ions specified above must agree within 20%.

- Ions with relative intensities >10% in the sample spectra but not present in the standard spectra must be accounted for by generating extracted ion current profiles (EICP) for the relevant ions.

- Compounds present in samples but determined not to be target compounds are treated as TICs. A maximum of 20 discrete compounds may be identified (at customer's discretion) by comparison of unknown spectra with a mass spectral library data base. TICs will be searched only when their relative ion concentration (RIC) area is greater than 10% of the nearest internal standard RIC area.

15.8. Quantitative analysis. When a target compound has been positively identified, quantitation is based on the EICP of the primary characteristic ion using the internal standard technique. The internal standard used will be the one nearest the retention time of the analyte.

15.8.1. The following calculations are used to quantify target analytes:

Low-level soil, sludge, sediment, or waste

$$\text{Conc of analyte (ng/g)} = \frac{A_x \times I_s \times V_t}{A_{is} \times R_f \times W_s \times V_s \times D} ,$$

where Ax = area of the characteristic ion for the analyte being measured,
Is = amount of internal standard injected (ng),
Vt = volume of total extract taking into account any dilutions,
Ais = area of characteristic ion for the internal standard,
Rf = response factor for the compound being measured,
Ws = weight of sample extracted or diluted in grams,
Vs = volume of extract injected (μL), and

$$D = \frac{(100 - \%\ \text{moisture in sample})}{100} ,$$

where D = 1.0 if the data will be reported on a wet-weight basis.

15.8.2. Calculation of response factors (RF). This applies to 1.0-μL injections of standards for continuing and initial calibration purposes.

$$RF = \frac{(Ax)\ (Cis)}{(Ais)\ (Cx)} ,$$

where Ax = area of the characteristic ion for the analyte being measured,
Cis = concentration of the specific internal standard (40 ng/μL),
Ais = area of the characteristic ion of the specific internal standard, and

Cx = concentration of the compound being measured (ng/μL).

15.8.3. Percent moisture determination. When sample concentrations are to be reported based on a dry weight, percent moisture is calculated using the following equation:

$$\% M = \frac{Sw - Sd}{Sw} \times 100 ,$$

where Sw = wet weight of the soil aliquot less the container weight, and
Sd = dry weight of the soil aliquot less the container weight after oven drying at 105°C for 24 h.

16. Reporting

Analytical results are reported using one of two target compound lists (TCLs) depending upon the requirements of the submitter. The Appendix 9 TCL list (groundwater monitoring) includes the Hazardous Substance List (HSL) plus 43 additional analytes. Table X lists HSL target compounds and Table XI lists the Appendix 9 target compounds. Compounds on the HSL list are routinely analyzed for and reported. Appendix 9 compounds are not routinely analyzed.

17. Proper Waste Disposal Practices

17.1. General waste management.

17.1.1. Each analyst within the section shall be given Waste Generator training by EM-8 within 9 days of date of hire.

17.1.2. Wherever possible, the generation of waste shall be minimized through reduction, reuse, or recycling. Wherever possible, containers should be segregated to reflect the nature of the hazardous waste and the eventual waste-disposal methods. For example, chlorinated solvent wastes should be segregated from flammable, nonchlorinated solvents, and >50-ppm contaminated PCB waste should be segregated from <50-ppm PCB contaminated waste. This is especially important in analysis areas where the waste generated is considered to be mixed waste.

17.1.3. Categorize the waste using a Waste Profile Form from EM-8.

17.1.4. Upon completion of a Waste Profile Form, the waste is disposed of by completing a Waste Disposal Request Form from EM-7. Approximately

30 days is required for the disposal of waste after the completion of the listed forms.

17.2. Solid waste.

17.2.1. Solid hazardous waste, such as contaminated paper towels, pipettes, spent syringes, and glass vials, is accumulated in a covered plastic container lined with a plastic bag. The container is labeled with a hazardous waste label identifying the hazard, the type of material being stored (i.e., pipettes, paper towels, etc.), the accumulation start date, and the laboratory of origin.

17.2.2. The waste container is opened only for the time necessary to add the waste.

17.3. Liquid waste.

17.3.1. Liquid wastes, such as spent samples and spent solvents that are not reuseable, are accumulated in glass or steel containers appropriate for the type of sample being stored. For example, caustic materials should be stored in glass containers whereas spent solvents that are not to be recycled should be stored in metal containers.

17.3.2. All containers storing hazardous liquid materials must be secondarily contained. The container is labeled with a hazardous waste label identifying the hazard, the type of material being stored, the accumulation start date, and the laboratory of origin.

17.3.3. The waste container is opened only for the time necessary to add the waste.

17.4. Unused samples.

17.4.1. Return unused environmental samples to the Sample Management section for disposal.

18. Source Materials

18.1. USEPA Contract Laboratory Program, Statement of Work for Organic Analysis Multi-media, Multi-Concentration, 2/88.

18.2. USEPA "Test Methods for Evaluating Solid Waste, Physical/Chemical Methods," SW-846, Third ed., 1988.

18.3. Sorbent Extraction Technology, K.C. Van Horne, Analytical International, Inc. 1985.

18.4 "Hazardous and Mixed Waste," Administrative Requirement 10-3, in *Environment, Safety, and Health Manual*, Los Alamos National Laboratory Manual, Chapter 1 (most recent edition).

TABLE IX.
CHARACTERISTICS IONS FOR SEMIVOLATILE COMPOUNDS

1 Compound	Retention time (min)	Primary ion	Secondary ion(s)
2-Picoline	3.75[a]	93	66, 92
Aniline	5.68	93	66, 65
Phenol	5.77	94	65, 66
Bis(2-chloroethyl) ether	5.82	93	63, 95
2-Chlorophenol	5.97	128	64, 130
1,3-Dichlorobenzene	6.27	146	148, 111
1,4-Dichlorobenzene-d_4 (I.S.)	6.35	152	150, 115
1,4-Dichlorobenzene	6.40	146	148, 111
Benzyl alcohol	6.78	108	79, 77
1,2-Dichlorobenzene	6.85	146	148, 111
N-Nitrosomethylethylamine	6.97	88	42, 88, 43, 56
Bis(2-chloroisopropyl) ether	7.22	45	77, 121
Ethyl carbamate	7.27	62	62, 44, 45, 74
Thiophenol (Benzenethiol)	7.42	110	110, 66, 109, 84
Methyl methanesulfonate	7.48	80	80, 79, 65, 95
N-Nitroso-di-n-propylamine	7.55	70	42, 101, 130
Hexachloroethane	7.65	117	201, 199
Maleic anhydride	7.65	54	54, 98, 53, 44
Nitrobenzene	7.87	77	123, 65
Isophorone	8.53	82	95, 138
N-Nitrosodiethylamine	8.70	102	102, 42, 57, 44, 56
2-Nitrophenol	8.75	139	109, 65
2,4-Dimethylphenol	9.03	122	107, 121
p-Benzoquinone	9.13	108	54, 108, 82, 80
Bis (2-chloroethoxy) methane	9.23	93	95, 123
Benzoic acid	9.38	122	105, 77

TABLE IX. (cont)

Compound	Retention time (min)	Primary ion	Secondary ion(s)
2,4-Dichlorophenol	9.48	162	164, 98
Trimethyl phosphate	9.53	110	110, 79, 95, 109, 140
Ethyl methanesulfonate	9.62	79	79, 109, 97, 45, 65
1,2,4-Trichlorobenzene	9.67	180	182, 145
Naphthalene-d_8 (I.S.)	9.75	136	68
Naphthalene	9.82	128	129, 127
Hexachlorobutadiene	10.43	225	223, 227
Tetraethyl pyrophosphate	11.07	99	99, 155, 127, 81, 109
Diethyl sulfate	11.37	139	139, 45, 59, 99, 111, 125
4-Chloro-3-methylphenol	11.68	107	144, 142
2-Methylnaphthalene	11.87	142	141
2-Methylphenol	12.40	107	107, 108, 77, 79 90
Hexachloropropene	12.45	213	213, 211, 215, 117, 106, 141
Hexachlorocyclopentadiene	12.60	237	235, 272
N-Nitrosopyrrolidine	12.65	100	100, 41, 42, 68, 69
Acetophenone	12.67	105	71, 105, 51, 120
4-Methylphenol	12.82	107	107, 108, 77, 79 90
2,4,6-Trichlorophenol	12.85	196	198, 200
o-Toluidine	12.87	106	106, 107, 77, 51, 79
3-Methylphenol	12.93	107	107, 108, 77, 79, 90
2-Chloronaphthalene	13.30	162	127, 164
N-Nitrosopiperidine	13.55	114	42, 114, 55, 56,41
1,4-Phenylenediamine	13.62	108	108, 80, 53, 54, 52
1-Chloronaphthalene	13.65[a]	162	127, 164
2-Nitroaniline	13.75	65	92, 138
5-Chloro-2-methylaniline	14.28	106	106, 141, 140, 77, 89
Dimethyl phthalate	14.48	163	194, 164

TABLE IX. (cont)

Compound	Retention time (min)	Primary ion	Secondary ion(s)
Acenaphthylene	14.57	152	151, 153
2,6-Dinitrotoluene	14.62	165	63, 89
Phthalic anhydride	14.62	104	104, 76, 50, 148
o-Anisidine	15.00	108	80, 108, 123, 52
3-Nitroaniline	15.02	138	108, 92
Acenaphthene-d_{10} (I.S.)	15.05	164	162, 160
Acenaphthene	15.13	154	153, 152
2,4-Dinitrophenol	15.35	184	63, 154
2,6-Dinitrophenol	15.47	162	162, 164, 126, 98, 63
4-Chloroaniline	15.50	127	127, 129, 65, 92
Isosafrole	15.60	162	162, 131, 104, 77, 51
Dibenzofuran	15.63	168	139
2,4-Diaminotoluene	15.78	121	121, 122, 94, 77, 104
2,4-Dinitrotoluene	15.80	165	63, 89
4-Nitrophenol	15.80	139	109, 65
2-Naphthylamine	16.00[a]	143	115, 116
1,4-Naphthoquinone	16.23	158	158, 104, 102, 76, 50, 130
p-Cresidine	16.45	122	122, 94, 137, 77, 93
Dichlorovos	16.48	109	109, 185, 79, 145
Diethyl phthalate	16.70	149	177, 150
Fluorene	16.70	166	165, 167
2,4,5-Trimethylaniline	16.70	120	120, 135, 134, 91, 77
N-Nitrosodibutylamine	16.73	84	84, 57, 41, 116, 158
4-Chlorophenyl phenyl ether	16.78	204	206, 141
Hydroquinone	16.93	110	110, 81, 53, 55
4,6-Dinitro-2-methylphenol	17.05	198	51, 105

TABLE IX. (cont)

Compound	Retention time (min)	Primary ion	Secondary ion(s)
Resorcinol	17.13	110	110, 81, 82, 53, 69
N-Nitrosodiphenylamine	17.17	169	168, 167
Safrole	17.23	162	162, 162, 104, 77, 103, 135
Hexamethyl phosphoramide	17.33	135	135, 44, 179, 92, 42
3-(Choromethyl) pyridine hydrochloride	17.50	92	92, 127, 129, 65, 39
Diphenylamine	17.54[a]	169	168, 167
1,2,4,5-Tetrachlorobenzene	17.97	216	216, 214, 179, 108, 143, 218
1-Naphthylamine	18.20	143	143, 115, 89, 63
1-Acetyl-2-thiourea	18.22	118	43, 118, 42, 76
4-Bromophenyl phenyl ether	18.27	248	250, 141
Toluene diisocyanate	18.42	174	174, 145, 173, 146, 132, 91
2,4,5-Trichlorophenol	18.47	196	196, 198, 97, 132, 99
Hexachlorobenzene	18.65	284	142, 249
Nicotine	18.70	84	84, 133, 161, 162
Pentachlorophenol	19.25	266	264, 268
5-Nitro-2-methylaniline	19.27	152,	77, 152, 79, 106, 94
Thionazine	19.35	107	96, 107, 97, 143, 79, 68
4-Nitroaniline	19.37	138	138, 65, 108, 92, 80, 39
Phenanthrene-d_{10} (I.S.)	19.55	188	94, 80
Phenanthrene	19.62	178	179, 176
Anthracene	19.77	178	176, 179
1,4-Dinitrobenzene	19.83	168	168, 75, 50, 76, 92, 122
Mevinphos	19.90	127	127, 192, 109, 67, 164
Naled	20.03	109	109, 145, 147, 301, 79, 189
1,3-Dinitrobenzene	20.18	168	168, 76, 50, 75, 92, 122
Diallate (cis or trans)	20.57	86	86, 234, 43, 70

TABLE IX. (cont)

Compound	Retention time (min)	Primary ion	Secondary ion(s)
1,2-Dinitrobenzene	20.58	168	168, 50, 63, 74
Diallate (trans or cis)	20.78	86	86, 234, 43, 70
Pentachlorobenzene	21.35	250	250, 252, 108, 248, 215, 254
5-Nitro-2-methoxyaniline	21.50	168	168, 79, 52, 138, 153, 77
Pentachloronitrobenzene	21.72	237	237, 142, 214, 249, 295, 265
4-Nitroquinoline-1-oxide	21.73	174	174, 101, 128, 75, 116
Di-n-butyl phthalate	21.78	149	150, 104
2,3,4,6-Tetrachlorophenol	21.88	232	232, 131, 230, 166, 234, 168
Demeton-o	22.72	88	88, 89, 60, 61, 115, 171
Fluoranthene	23.33	202	101, 203
1,3,5-Trinitrobenzene	23.68	75	75, 74, 213, 120, 91, 63
Dicrotophos	23.82	127	127, 67, 72, 109, 193, 237
Benzidine	23.87	184	92, 185
Trifluralin	23.88	306	306, 43, 264, 41, 290
Bromoxynil	23.90	277	277, 279, 88, 275, 168
Pyrene	24.02	202	200, 203
Monocrothophos	24.08	127	127, 192, 67, 97, 109
Phorate	24.10	75	75, 121, 97, 93, 260
Sulfallate	24.23	188	188, 88, 72, 60, 44
Demeton-s	24.30	88	88, 60, 81, 89, 114, 115
Phenacetin	24.33	108	180, 179, 109, 137, 80
Dimethoate	24.70	87	87, 93, 125, 143, 229
Phenobarbital	24.70	204	204, 117, 232, 146, 161
Carbofuran	24.90	164	164, 149, 131, 122
Octamethyl pyrophosphoramide	24.95	135	135, 44, 199, 286, 153, 243
4-Aminobiphenyl	25.08	169	169, 168, 170, 115

TABLE IX. (cont)

Compound	Retention time (min)	Primary ion	Secondary ion(s)
Terbufos	25.35	231	231, 57, 97, 153, 103
Pronamide	25.48	173	173, 175, 145, 109, 147
Aminoazobenzene	25.72	197	92, 197, 120, 65, 77
Dichlone	25.77	191	191, 163, 226, 228, 135, 193
Dinoseb	25.83	211	211, 163, 147, 117, 240
Disulfoton	25.83	88	88, 97, 89, 142, 186
Fluchloralin	25.88	306	306, 63, 326, 328, 264, 65
Mexacarbate	26.02	165	165, 150, 134, 164, 222
4.4'-Oxydianiline	26.08	200	200, 108, 171, 80, 65
Butyl benzyl phthalate	26.43	149	91, 206
4-Nitrobiphenyl	26.55	199	199, 152, 141, 169, 151
Phosphamidon	26.85	127	127, 264, 72, 109, 138
2-Cyclohexyl-4,6-dinitrophenol	26.87	231	231, 185, 41, 193, 266
Methyl Parathion	27.03	109	109, 125, 263, 79, 93
Carbaryl	27.17	144	144, 115, 116, 201
Dimethylaminoazobenzene	27.50	225	225, 120, 77, 105, 148, 42
Propylthiouracil	27.68	170	170, 142, 114, 83
Benz (a) anthracene	27.83	228	229, 226
Chrysene-d_{12} (I.S.)	27.88	240	120, 236
3,3'-Dichlorobenzidine	27.88	252	254, 126
Chrysene	27.97	228	226, 229
Malathion	28.08	173	173, 125, 127, 93, 158
Kepone	28.18	272	272, 274, 237, 178, 143, 270
Fenthion	28.37	278	278, 125, 109, 169, 153
Parathion	28.40	109	109, 97, 291, 139, 155

TABLE IX. (cont)

Compound	Retention time (min)	Primary ion	Secondary ion(s)
Anilazine	28.47	239	239, 241, 143, 178, 89
Bis(2-ethylhexyl) phthalate	28.47	149	167, 279
3,3'-Dimethylbenzidine	28.55	212	212, 106, 196, 180
Carbophenothion	28.58	157	157, 97, 121, 342, 159, 199
5-Nitroacenaphthene	28.73	199	199, 152, 169, 141, 115
Methapyrilene	28.77	97	97, 50, 191, 71
Isodrin	28.95	193	193, 66, 195, 263, 265, 147
Captan	29.47	79	79, 149, 77, 119, 117
Chlorfenvinphos	29.53	267	267, 269, 323, 325 295
Crotoxyphos	29.73	127	127, 105, 193, 166
Phosmet	30.03	160	160, 77, 93, 317, 76
EPN	30.11	157	157, 169, 185, 141, 323
Tetrachlorvinphos	30.27	329	109, 329, 331, 79, 333
Di-n-octyl phthalate	30.48	149	167, 43
2-Aminoanthraquinone	30.63	223	223, 167, 195
Barban	30.83	222	222, 51, 87, 224, 257, 153
Aramite	30.92	185	185, 191, 319, 334, 197, 321
Benzo(b)fluoranthene	31.45	252	253, 125
Nitrofen	31.48	283	283, 285, 202, 139, 253
Benzo(k)fluoranthene	31.55	252	253, 125
Chlorobenzilate	31.77	251	251, 139, 253, 111, 141
Fensulfothion	31.87	293	293, 97, 308, 125, 292
Ethion	32.08	231	231, 97, 153, 125, 121
Diethylstilbestrol	32.15	268	268, 145, 107, 239, 121, 159
Famphur	32.67	218	218, 125, 93, 109, 217
Tri-p-tolyl phosphate[b]	32.75	368	368, 367, 107, 165, 198

TABLE IX. (cont)

Compound	Retention time (min)	Primary ion	Secondary ion(s)
Benzo(a)pyrene	32.80	252	253, 125
Perylene-d_{12} (I.S.)	33.05	264	260, 265
7,12-Dimethylbenz(a)anthracene	33.25	256	256, 241, 239, 120
5,5-Diphenylhydantoin	33.40	180	180, 104, 252, 223, 209
Captafol	33.47	79	79, 77, 80, 107
Dinocap	33.47	69	69, 41, 39
Methoxychlor	33.55	227	227, 228, 152, 114, 274, 212
2-Acetylaminofluorene	33.58	181	181, 180, 223, 152
4,4'-Methylenebis-(2-chloroaniline)	34.38	231	231, 266, 268, 140, 195
3,3'-Dimethoxybenzidine	34.47	244	244, 201, 229
3-Methylcholanthrene	35.07	268	268, 252, 253, 126, 134, 113
Phosalone	35.23	182	182, 184, 367, 121, 379
Azinphos-methyl	35.25	160	160, 132, 93, 104, 105
Leptophos	35.28	171	171, 377, 375, 77, 155, 379
Mirex	35.43	272	272, 237, 274, 270 239, 235
Tris(2,3-dibromopropyl) phosphate	35.68	201	137, 201, 119, 217, 219, 199
Dibenz(a,j)acridine	36.40	279	279, 280, 277, 250
Mestranol	36.48	277	277, 310, 174, 147, 242
Coumaphos	37.08	362	362, 226, 210, 364, 97, 109
Indeno(1,2,3-cd)pyrene	39.52	276	138, 227
Dibenz(a,h)anthracene	39.82	278	139, 279
Benzo(g,h,i)perylene	41.43	276	138,277
1,2:4,5-Dibenzopyrene	41.60	302	302, 151, 150, 300
Strychnine	45.15	334	334, 335, 333

TABLE IX. (cont)

Compound	Retention time (min)	Primary ion	Secondary ion(s)
Piperonyl sulfoxide	46.43	162	162, 135, 105, 77
Hexachlorophene	47.98	196	196, 198, 209, 211, 406, 408
Aldrin		66	263, 220
Aroclor-1016		222	260, 292
Aroclor-1221		190	224, 260
Aroclor-1232		190	224, 260
Aroclor-1242		222	256, 292
Aroclor-1248		292	362, 326
Aroclor-1254		292	362, 326
Aroclor-1260		360	362, 394
α-BHC		183	181, 109
β-BHC		181	183, 109
4,4'-DDD		235	237, 165
4,4'-DDE		246	248, 176
4,4'-DDT		235	237,165
Dieldrin		79	263, 279
1,2-Diphenylhydrazine		77	105, 182
Endosulfan I		195	339, 341
Endosulfan II		337	339, 341
Endosulfan sulfate		272	387, 422
Endrin		263	82, 81
Endrin aldehyde		67	345, 250
Endrin ketone		317	67, 319
2-Fluorobiphenyl (surr.)		172	171
2-Fluorophenol (surr.)		112	64
Heptachlor		100	272, 274
Heptachlor epoxide		353	355, 351

TABLE IX. (cont)

Compound	Retention time (min)	Primary ion	Secondary ion(s)
Nitrobenzene-d_5 (surr.)		82	128, 54
N-Nitrosodimethylamine		42	74, 44
Phenol-d_6 (surr.)		99	42, 71
Terphenyl-d_{14} (surr.)		244	122, 212
2,4,6-Tribromophenol (surr.)		330	332, 141
Toxaphene		159	231, 233

I.S. = internal standard
surr. = surrogate
[a]Estimated retention times
[b]Substitute for the non-specific mixture, tricresyl phosphate

TABLE X.
LIMIT OF QUANTITATION FOR HAZARDOUS SUBSTANCE LIST OF SEMIVOLATILE ORGANIC ANALYTES IN SOIL

Compound	CAS number	LOQ µg/kg
Acenaphthene	83-32-9	330
Acenaphthylene	208-96-2	330
Anthracene	120-12-7	330
Aniline	62-53-3	330 *
Azobenzene	103-33-3	330
Benzidine	92-87-5	330 *,a
Benz(a)anthracene	56-55-3	330
Benzo(b)fluoranthene	205-99-2	330
Benzo(k)fluoranthene	207-88-9	330
Benzoic Acid	65-85-0	330 *,c
Benzo(g,h,i)perylene	191-24-2	330
Benzo(a)pyrene	50-32-8	330
Benzyl alcohol	100-51-6	330
Bis(2-chloroethoxy)methane	111-91-1	330
Bis(2-chloroethyl) ether	111-44-4	330
Bis(2-chloroisopropyl) ether	108-60-1	330
4-Bromophenyl phenyl ether	101-55-3	330
Butyl benzyl phthalate	85-68-7	330 *
4-Chloroaniline	106-47-8	330 *,c
4-Chloro-3-methylphenol	59-50-7	330
2-Chloroanaphthalene	91-58-7	330
2-Chlorophenol	95-57-8	330
4-Chlorophenyl phenyl ether	7005-72-3	330
Chrysene	218-01-9	330
Dibenz(a,h)anthracene	53-70-3	330
Dibenzofuran	132-64-9	330

TABLE X. (cont)

Compound	CAS number	LOQ µg/kg
Di-n-butyl phthalate	84-74-2	330 *
1,2-Dichlorobenzene	95-50-1	330
1,3-Dichlorobenzene	541-73-1	330
1,4-Dichlorobenzene	106-46-7	330
3,3'-Dichlorobenzidine	91-94-1	330 *
2,4-Dichlorophenol	120-83-2	330
Diethyl phthalate	84-66-2	330 *
2,4-Dimethylphenol	105-67-9	330 *,c
Dimethyl phthalate	131-11-3	330 *
4,6-Dinitro-2-methylphenol	534-52-1	330
2,4-Dinitrophenol	51-28-5	330 *,c
2,4-Dinitrotoluene	121-14-2	330
2,6-Dinitrotoluene	606-20-2	330
Di-n-octyl phthalate	117-84-0	330
Bis(2-ethylhexyl) phthalate	117-81-7	330
Fluoranthene	206-44-0	330
Fluorene	86-73-7	330
Hexachlorobenzene	118-74-1	330
Hexachlorobutadiene	87-68-3	330
Hexachlorocyclopentadiene	77-47-4	330*,d
Hexachloroethane	67-72-1	330
Indeno(1,2,3-cd)pyrene	193-39-5	330
Isophorone	78-59-1	330
2-Methylnaphthalene	91-57-6	330
2-Methylphenol	95-48-7	330 *,c
4-Methylphenol	6-44-5	330 *,c
Naphthalene	91-20-3	330
2-Nitroaniline	88-74-4	330

TABLE X. (cont)

Compound	CAS number	LOQ µg/kg
3-Nitroaniline	99-09-2	330 *,c
4-Nitroaniline	100-01-6	330 *,c
Nitrobenzene	98-95-3	330
2-Nitrophenol	88-75-5	330
4-Nitrophenol	100-02-7	330 *,c
N-nitrosodimethylamine	62-75-9	330 *,c
N-nitrosodiphenylamine	86-30-6	330
N-Nitroso-di-n-propylamine	621-64-7	330 *
Pentachlorophenol	87-86-5	330 *,c
Phenanthrene	85-01-8	330
Phenol	108-95-2	330
Pyrene	129-00-0	330
1,2,4-Trichlorobenzene	120-82-1	330
2,4,5-Trichlorophenol	95-95-4	330
2,4,6-Trichlorophenol	88-06-2	330

* The limit of quantitation has not been verified for these analytes based upon a Method Detection Limit study. All other analytes averaged better than 70% recovery based upon seven repetitions. The amount of each analyte spiked was 330 µg into 1.0 L.

a Exhibits nonreproducible chromatography and oxidative loss during concentration.

c These analytes are subject to erratic chromatographic performance and/or thermal decomposition in the gas chromatograph inlet.

d Subject to thermal decomposition in the chromatographic inlet, chemical reaction with acetone in solution, and photochemical decomposition.

Limits of Quantitation (LOQ) will be two times greater for soil/sediment matrices which have been GPC cleaned.

TABLE XI.
APPENDIX 9 TARGET COMPOUND LIST OF SEMIVOLATILE ORGANIC ANALYTES IN SOIL-LIMIT OF QUANTITATION

Compound	CAS number	LOQ µg/kg
Acenaphthene	83-32-9	330
Acenaphthylene	208-96-2	330
Acetophenone	98-86-2	ND
Anthracene	120-12-7	330
Aniline	62-53-3	330 *
Aramite	140-57-8	ND
Azobenzene	103-33-3	330
Benzidine	92-87-5	330 *,a
Benz(a)anthracene	56-55-3	330
Benzo(b)fluoranthene	205-99-2	330
Benzo(k)fluoranthene	207-88-9	330
Benzoic Acid	65-85-0	330 *,c
Benzo(g,h,i)perylene	191-24-2	330
Benzo(a)pyrene	50-32-8	330
Benzyl alcohol	100-51-6	330
Bis(2-chloroethoxy)methane	111-91-1	330
Bis(2-chloroethyl) ether	111-44-4	330
Bis(2-chloroisopropyl) ether	108-60-1	330
4-Bromophenyl phenyl ether	101-55-3	330
Butyl benzyl phthalate	85-68-7	330 *
4-Chloroaniline	106-47-8	330 *,c
Chlorobenzilate	510-15-6	ND
4-Chloro-3-methylphenol	59-50-7	330
2-Chloroanaphthalene	91-58-7	330
2-Chlorophenol	95-57-8	330
4-Chlorophenyl phenyl ether	7005-72-3	330

TABLE XI. (cont)

Compound	CAS number	LOQ µg/kg
Chrysene	218-01-9	330
Diallate	2303-16-4	ND
Dibenz(a,h)anthracene	53-70-3	330
Dibenzofuran	132-64-9	330
Di-n-butyl phthalate	84-74-2	330 *
1,2-Dichlorobenzene	95-50-1	330
1,3-Dichlorobenzene	541-73-1	330
1,4-Dichorobenzene	106-46-7	330
3,3'-Dichlorobenzidine	91-94-1	330 *
2,4-Dichlorophenol	120-83-2	330
Diethylphthalate	84-66-2	330 *
Dimethoate	60-51-5	ND
7,12-Dimethylbenz(a)-anthracene	57-97-6	ND
2,4-Dimethylphenol	105-67-9	330 *,c
Dimethyl phthalate	131-11-3	330 *
4,6-Dinitro-2-methylphenol	534-52-1	330
2,4-Dinitrophenol	51-28-5	330 *,c
2,4-Dinitrotoluene	121-14-2	330
2,6-Dinitrotoluene	606-20-2	330
Di-n-octyl phthalate	117-84-0	330
Diphenylamine	122-39-4	ND
Dinoseb (DNBP)	88-85-7	ND
Disulfoton	298-04-4	ND
Bis(2-ethylhexyl) phthalate	117-81-7	330
Ethyl methacrylate	97-63-2	ND
Ethyl methanesulfonate	62-50-0	ND

TABLE XI. (cont)

Compound	CAS number	LOQ µg/kg
Famphur	52-85-7	ND
Fluoranthene	206-44-0	330
Fluorene	86-73-7	330
Hexachlorobenzene	118-74-1	330
Hexachlorobutadiene	87-68-3	330
Hexachlorocyclopentadiene	77-47-4	330*,d
Hexachloroethane	67-72-1	330
Hexachlorophene	70-30-4	ND
Hexachloropropene	1888-71-7	ND
Indeno(1,2,3-cd)pyrene	193-39-5	330
Isodrin	465-73-6	ND
Isosafrole	120-58-1	ND
Isophorone	78-59-1	330
Kepone	143-50-0	ND
3-Methylcholanthrene	56-49-5	ND
2-Methylnaphthalene	91-57-6	330
2-Methylphenol	95-48-7	330 *,c
4-Methylphenol	106-44-5	330 *,c
Methapyrilene hydrochloride	91-80-5	ND
Methyl methacrylate	80-62-6	ND
Methyl methanesulfonate	66-27-3	ND
Methyl Parathion	296-00-0	ND
Naphthalene	91-20-3	330
2-Nitroaniline	88-74-4	330
3-Nitroaniline	99-09-2	330 *,c
4-Nitroaniline	100-01-6	330 *,c
Nitrobenzene	98-95-3	330
2-Nitrophenol	88-75-5	330

TABLE XI. (cont)		
Compound	CAS number	LOQ µg/kg
4-Nitrophenol	100-02-7	330 *,c
4-Nitroquinoline-1-oxide	56-57-5	ND
5-Nitro-o-toluidine	99-55-8	ND
N-Nitrosodiethylamine	55-18-5	ND
N-Nitrosomethylethylamine	10595-95-6	ND
N-Nitroso-di-n-butylamine	924-16-3	ND
N-Nitrosodimethylamine	62-75-9	330 *,c
N-Nitrosodiphenylamine	86-30-6	330
N-Nitroso-di-n-propylamine	621-64-7	330 *
o-Toluidine	95-53-4	ND
Parathion	56-38-2	ND
Pentachloroethane	76-01-7	ND
Pentachloronitrobenzene	82-68-8	ND
Pentachlorophenol	87-86-5	330 *,c
Phenacetin	62-44-2	ND
Phenanthrene	85-01-8	330
Phenol	108-95-2	330
Phorate	298-02-2	ND
2-Picoline	109-06-8	ND
Pronamide	23950-58-5	ND
Pyridine	110-86-1	ND
Pyrene	129-00-0	330
Safrole	94-59-7	ND
2,3,4,6-Tetrachlorophenol	58-90-2	ND
1,2,4-Trichlorobenzene	120-82-1	330
2,4,5-Trichlorophenol	95-95-4	330
O,O,O-Triethyl phosphorate	126-68-1	ND
2,4,6-Trichlorophenol	88-06-2	330

TABLE XI. (cont)

Compound	CAS number	LOQ µg/kg
sym-Trinitrobenzene	99-35-4	ND
Tetraethyl dithiophosphate	3689-24-5	ND

* The limit of quantitation has not been verified for these analytes based upon a Method Detection Limit study. All other analytes averaged better than 70% recovery based upon seven repetitions. The amount of each analyte spiked was 330 µg into 1.0 L.

a Exhibits nonreproducible chromatography and oxidative loss during concentration.

c These analytes are subject to erratic chromatographic performance and/or thermal decomposition in the gas chromatograph inlet.

d Subject to thermal decomposition in the chromatographic inlet, chemical reaction with acetone in solution, and photochemical decomposition.

ND not determined for these analytes.

Limits of Quantitation (LOQ) will be two times greater for soil/sediment matrices which have been GPC cleaned.

TABLE XII.
PRACTICAL QUANTITATION LIMITS (PQL) FOR SEMIVOLATILE ORGANICS

Compound	Ground water (μg/L)	Soil/Solid (μg/kg)
Acenaphthene	10	660
Acenaphthylene	10	660
Acetophenone	10	ND
2-Acetylaminofluorene	20	ND
1-Acetyl-2-thiourea	1000	ND
2-Aminoanthraquinone	20	ND
Aminoazobenzene	10	ND
4-Aminobiphenyl	20	ND
Anilazine	100	ND
o-Anisidine	10	ND
Anthracene	10	660
Aramite	20	ND
Azinphos-methyl	100	ND
Barban	200	ND
Benz(a)anthracene	10	660
Benzo(b)fluoranthene	10	660
Benzo(k)fluoranthene	10	660
Benzoic Acid	50	3300
Benzo(g,h,i)perylene	10	660
Benzo(a)pyrene	10	660
p-Benzoquinone	10	ND
Benzyl alcohol	20	1300
Bis(2-chloroethoxy)methane	10	660
Bis(2-chloroethyl) ether	10	660
Bis(2-chloroisopropyl) ether	10	660
4-Bromophenyl phenyl ether	10	660

TABLE XII. (cont)

Compound	Ground water (μg/L)	Soil/Solid (μg/kg)
Bromoxynil	10	ND
Butyl benzyl phthalate	10	660
Captafol	20	ND
Captan	50	ND
Carbaryl	10	ND
Carbofuran	10	ND
Carbophenothion	10	ND
Chlorofenvinphos	20	ND
4-Chloroaniline	20	1300
Chlorobenzilate	10	ND
5-Chloro-2-methylaniline	10	ND
4-Chloro-3-methylphenol	20	1300
3-(Chloromethyl)pyridine hydrochloride	100	ND
2-Chloroanaphthalene	10	660
2-Chlorophenol	10	660
4-Chlorophenyl phenyl ether	10	660
Chrysene	10	660
Coumaphos	40	ND
p-Cresidine	10	ND
Crotoxyphos	20	ND
2-Cyclohexyl-4,6-dinitrophenol	100	ND
Demeton-o	10	ND
Demeton-s	10	ND
Diallate	10	ND
2,4-Diaminotoluene	20	ND
Dibenz(a,j)acridine	10	ND

TABLE XII. (cont)

Compound	Ground water (μg/L)	Soil/Solid (μg/kg)
Dibenz(a,h)anthracene	10	660
Dibenzofuran	10.	660
Dibenzo(a,e)pyrene	10	ND
Di-n-butyl phthalate	10	ND
Dichlone	NA	ND
1,2-Dichlorobenzene	10	660
1,3-Dichlorobenzene	10	660
1,4-Dichlorobenzene	10	660
3,3'-Dichlorobenzidine	20	1330
2,4-Dichlorophenol	10	660
2,6-Dichlorophenol	10	ND
Dichlorovos	10	ND
Dichlorophos	10	ND
Diethyl phthalate	10	660
Diethylstilbestrol	20	ND
Diethyl sulfate	100	ND
Dimethoate	20	ND
3,3'-Dimethoxybenzidine	100	ND
Dimethylaminoazobenzene	10	ND
7,12-Dimethylbenz(a)-anthracene	10	ND
3,3'-Dimethylbenzidine	10	ND
a,a-Dimethylphenethylamine	ND	ND
2,4-Dimethylphenol	10	660
Dimethyl phthalate	10	660
1,2-Dinitrobenzene	40	ND
4,6-Dinitro-2-methylphenol	50	3300
2,4-Dinitrophenol	50	3300

TABLE XII. (cont)

Compound	Ground water (μg/L)	Soil/Solid (μg/kg)
Dinocap	100	ND
Dinoseb	20	ND
5,5-Diphenylhydantoin	20	ND
Di-n-octyl phthalate	10	660
Disulfoton	10	ND
EPN	10	ND
Ethion	10	ND
Ethyl carbamate	50	ND
Bis(2-ethylhexyl) phthalate	10	660
Ethyl methanesulfonate	20	ND
Famphur	20	ND
Fensulfothion	40	ND
Fenthion	10	ND
Fluchloralin	20	ND
Fluoranthene	10	660
Fluorene	10	660
Hexachlorobenzene	10	660
Hexachlorobutadiene	10	660
Hexachlorocyclopentadiene	10	660
Hexachloroethane	10	660
Hexachlorophene	50	ND
Hexachloropropene	10	ND
Hexamethyl phosphoramide	20	ND
Hydroquinone	ND	ND
Isophorone	10	660
Leptophos	10	ND
Malathion	50	ND
Maleic anhydride	NA	ND

TABLE XII. (cont)

Compound	Ground water (μg/L)	Soil/Solid (μg/kg)
Mestranol	20	ND
Methapyriline	100	ND
Methoxychlor	10	ND
3-Methylcholanthrene	10	ND
4,4'-Methylenebis-(2-chloroaniline)	NA	ND
Methyl methanesulfonate	10	ND
2-Methylnaphthalene	10	660
Methyl Parathion	10	ND
2-Methylphenol	10	660
3-Methylphenol	10	ND
4-Methylphenol	10	660
Mevinphos	10	ND
Mexacarbate	20	ND
Mirex	10	ND
Monocrotophos	40	ND
Naled	20	ND
Naphthalene	10	660
1,4-Naphthoquinone	10	ND
1-Naphthylamine	10	ND
2-Naphthylamine	10	ND
Nicotine	20	ND
5-Nitroacenaphthene	10	ND
4-Nitroaniline	20	ND
5-Nitro-2-methoxyaniline	10	ND
Nitrobenzene	10	660
2-Nitrophenol	10	660
4-Nitrophenol	50	3300

TABLE XII. (cont)

Compound	Ground water (μg/L)	Soil/Solid (μg/kg)
5-Nitro-2-methylaniline	10	ND
4-Nitroquinoline-1-oxide	40	ND
N-Nitrosodibutylamine	10	ND
N-Nitrosodiethylamine	20	ND
N-Nitrosodiphenylamine	10	660
N-Nitroso-di-n-propylamine	10	660
N-Nitrosopiperidine	20	ND
N-Nitrosopyrrolidine	40	ND
Octamethyl pyrophosphoramide	200	ND
4,4'-Oxydianiline	20	ND
Parathion	10	ND
Pentachlorobenzene	10	ND
Pentachloronitrobenzene	20	ND
Pentachlorophenol	50	3300
Phenacetin	20	ND
Phenanthrene	10	660
Phenobarbital	10	ND
Phenol	10	660
1,4-Phenylenediamine	10	ND
Phorate	10	ND
Phosphamidon	100	ND
Phthalic anhydride	100	ND
Pronamide	10	ND
Propylthiouracil	100	ND
Pyrene	10	660
Pyridine	ND	ND

TABLE XII. (cont)

Compound	Ground water (μg/L)	Soil/Solid (μg/kg)
Resorcinol	100	ND
Safrole	10	ND
Strychnine	40	ND
Sulfallate	10	ND
Terbufos	20	ND
1,2,4,5-Tetrachlorobenzene	10	ND
2,3,4,6-Tetrachlorophenol	10	ND
Tetrachlorvinphos	20	ND
Tetraethyl pyrophosphate	40	ND
Thionazine	20	ND
Thiophenol (benzenethiol)	20	ND
Toluene diisocyanate	100	ND
o-Toluidine	10	ND
1,2,4-Trichlorobenzene	10	660
2,4,5-Trichlorophenol	10	660
2,4,6-Trichlorophenol	10	660
Trifluralin	10	ND
2,4,5-Trimethylaniline	10	ND
Tris(2,3-dibromopropyl) phosphate	200	ND
Tri-p-tolyl phosphate (h)	10	ND
O,O,O-Triethylphosphorothioate	NT	ND

a Soil/sediment PQLs are based upon a 30.0 g sample aliquot, wet weight, and GPC cleanup. When concentrations are reported on a dry weight basis the PQL will be higher.

TABLE XII. (cont)

b These values are for guidance only and may not always be achievable. Analyte recoveries are highly matrix dependent.

c ND = Not determined

d NA = Not applicable

SEMIVOLATILE ORGANICS IN AQUEOUS MATRICES: SOLVENT EXTRACTION – GC/MS

Analyte: Base Neutral/Acid extractables (BNAs)	**Method No.:** EO530
Matrix: Water, aqueous waste	**Minimum Detection Limit:** 10.0-50.0 μg/L nominal (matrix dependent)
Procedure: Extraction and concentration of analytes with an appropriate solvent followed by capillary column GC/MS analysis.	**Accuracy and Precision:** These parameters are analyte dependent and are greatly influenced by the nature of the matrix.
Effective Date: 10/01/90	**Authors:** Martin W. Koby Matthew Monagle

SAFETY NOTE: Before beginning this procedure, read all of the Material Safety Data Sheets for the chemicals listed in Sec. 8. Read Sec. 4.3 of the EM-9 Safety Manual for information on personal protective clothing and equipment. Read Sec. 18 of this procedure and Source Material 19.4 for proper waste disposal practices.

1. Principle of Method

1.1. Analytes are extracted from aqueous samples with methylene chloride. Extraction is performed under strongly basic (pH >12) and strongly acidic (pH <2) conditions, producing in two solvent fractions per sample. Extracts are then combined and concentrated to a small final volume (typically 1.0 mL), cleaned by alumina and/or gel permeation chromatography, and analyzed by gas chromatography/mass spectrometry. The mass spectrometer is operated in a scanning, electron impact (EI) ionization mode. The gas chromatograph is temperature programmed to effectively separate the wide range of analytes.

Analytes from a wide variety of compound classes can be determined using this method. Table XII contains a list of semivolatile organic analytes and their corresponding quantitation limits for which this procedure may be applicable. Table X lists the compounds normally analyzed for by EM-9 (Hazardous Substance List). Additional compounds may be analyzed for upon request. (Tables IX - XII are found at the end of this procedure.)

1.2. Qualitative analysis is performed by comparing retention time and mass spectral data of unknowns to those of a standard mix for which the analytical system has been calibrated. USEPA-defined criteria (SW-846, Source Material 19.2) are used to establish the validity of a compound identity.

1.3. Quantitation is achieved using the internal standard technique. Once the identity of a compound is determined, quantitation is based on the integrated abundance of the extracted ion chromatogram (EIC) of the primary characteristic ion (PCI) for that compound. This value is compared to integrated abundance of the EIC of the PCI for the internal standard nearest the retention time of a given analyte. Additional factors taken into account include the response factor of the compound being measured, the final volume of extract, and the sample aliquot extracted.

2. Sensitivity

2.1. Practical limits of quantitation are generally in the range of 10.0 μg/L to 50 μg/L for low-level aqueous matrices. Matrices which are relatively free of interferences have lower attainable limits of detection than those having large amounts of coextractible material, such as drum waste. Medium-level extracts have a nominal detection limit of 1000 μg/kg.

2.2. The values in 2.1 are analyte dependent and can be greatly influenced by matrix constituents, sample inlet conditions, and general analyte reactivity. Response factors for standards tend to show linearity to 180 μg/mL, but specific compounds may show decreasing chromatographic performance or detector saturation at this concentration.

3. Accuracy and Precision

3.1. Based upon surrogate and spike data, analyte recoveries are typically in the 60-110% range. Recoveries can be expected to vary depending upon the analyte and matrix complexity.

3.2. Long-range precision data is based upon matrix spike and spike duplicate percent recovery and the relative percent difference between the two. Refer to Section 16, Table VIII.

4. Interferences

4.1. Any material that will cause an increase in background signal or elevated baseline or result in discrete chromatographic peaks which are not attributable to target compounds may interfere with the identification and quantitation of a given analyte. Environmental matrices containing high concentrations of humic material, oils, hydrocarbons, lipids, sulfur, or polar material such as alcohols and carboxylic acids meet the preceding description.

4.2. Excessive particulate matter in water, extreme alkalinity or acidity, reactive material, intense light, and high temperature can negatively affect analyte recovery.

5. Sample Collection and Storage

5.1. All sampling equipment should be free of introduced contaminants.

5.2. Water samples are typically collected in amber or clear glass wide mouth bottles. Caps should have Teflon liners; however, aluminum foil can be substituted for Teflon if necessary. Excessive headspace should be avoided.

5.3. Samples should be stored, unpreserved, in a refrigerator at 4°C until extraction is initiated.

6. Sample Holding Times

6.1. Water samples must be extracted within 7 d of receipt.

6.2. Sample extracts must be analyzed within 40 d of extraction.

7. Apparatus

7.1. Gas chromatograph/mass spectrometer: GC capable of temperature programming from 25-300°C. The mass spectrometer, using electron impact ionization, must be capable of scanning a mass range of 35-500 AMU in 1.0 s or less.

7.2. Data system: capable of initiating and controlling data acquisition, storing spectral and chromatographic data, and performing mass spectral library searches.

7.3. Chromatographic column: 5% methyl phenyl silicone, 30-m x 0.25-mm-i.d x 0.5-micron film thickness, J&W DB-5.625 or equivalent.

7.4. Semiautomated gel permeation chromatograph (GPC): capable of uninterrupted multiextract processing. GPC Autoprep model 1002B, Analytical Bio-chemistry Laboratories, Inc. The column packing material used for this application is 70 g of 3% crosslinked styrene divinyl benzene (SX-3 BioBeads, Biorad Corp.).

7.5. Refrigerated recirculating heat exchanger: Neslab Coolflow CFT-33 or equivalent.

7.6. Ultracentrifuge: with rotor capable of holding six 250-mL bottles.

7.7. Nitrogen evaporation apparatus with multiple sample capacity: Organomation N-EVAP, Model 111 or equivalent.

7.8. Concentric ring steam table: 4- or 8-hole, Boekel, Inc. or equivalent.

7.9. Automated evaporative concentrator: Zymark Turbovap or equivalent may be substituted for items 7.9 and 7.10.

7.10. Continuous Liquid/Liquid extractors: 1- or 2-L capacity, available from Precision Glassblowing, Englewood, Colorado.

7.11. Kuderna-Danish concentrators: consisting of 500-mL flask, 15-mL calibrated receiver tube, and three-ball Snyder column.

7.12. Condensers: glass, 300-mm jacket, Allihn bulb type with 55/50 ground glass joint.

7.13. Separatory funnels: 2-L, glass, with Teflon stopcocks.

7.14. Glass filtering funnels.

7.15. Centrifuge bottles: 250-mL, heavy wall.

7.16. Round bottom flasks: 500-mL, glass, 24/40 joint.

7.17. Beakers: glass, 100-, 150-, 250-, 400-, and 600-mL capacity.

7.18. Glass vials: 1.8-mL crimp cap, 1.8-, 7-, 10-, 12-, 15-, and 40-mL capacity screw cap with septa.

7.19. Volumetric glassware: 1-, 2-, 5-, 10-, 25-, 50-, 100-, and 250-mL with stoppers.

7.20. Disposable glass pipettes: 1-, 2-, 5-, and 10-mL.

7.21. Adjustable low-volume pipettors: 10- to 250-μL capacity with disposable capillary tips SMI brand or equivalent.

7.22. Syringes: glass, gas-tight, 10-, 25-, 50-, and 100-μL volume.

7.23. Heating mantles: 500-mL, Glas-col STM or equivalent.

7.24. Teflon boiling stones.

7.25. Glass wool.

7.26. Jack stands: 6 in. by 6 in.

7.27. Aluminum foil.

7.28. Wide range pH indicator strips.

7.29. Oven: capable of being heated to 500°C.

7.30. Muffle furnace: capable of being heated to 900°C.

8. Reagents

8.1. Methylene chloride (Baker resi-analyzed).

8.2. Acetone (Baker resi-analyzed).

8.3. Methanol (HPLC-grade).

8.4. Hexane (pesticide-grade).

8.5. Reagent water (deionized). Charcoal filtered and/or distilled water demonstrated to be free from interferences.

8.6. Sodium sulfate (granular). Muffle overnight at 400°C. Alternatively, it can be Soxhlet-extracted with methylene chloride before use. Store in a covered container.

8.7. Sulfuric acid (diluted 1:1 with reagent water). While mixing, slowly add 500 mL of concentrated sulfuric acid to 400 mL of reagent water in a 1-L volumetric flask. Allow to cool to room temperature and dilute to volume. Store in a properly labeled covered container.

8.8. Sodium sulfate (10 N). Slowly add 40.0 g granular Na_2SO_4 to reagent water in a 100-mL volumetric flask while mixing. Allow to cool and dilute to volume. Store in a properly labeled covered container.

8.9. Alumina (Woelm Neutral Super I, ICN brand). Muffle for 4 h at 140°C and store in a desiccator before use. Deactivate to activity level III by adding 7% water (vol/wt) and shaking on a wrist action shaker for 2 h.

8.10. Bio Beads SX-3. Soak 70 g in methylene chloride overnight to facilitate swelling of the resin. Pack the column, establish flow and pressure, and allow to equilibrate with CH_2Cl_2 for 24 h before to calibration and use.

9. Standards

9.1. Stock standards are solutions of analytes, internal standards or surrogates at relatively high concentrations which are used to prepare working standards. They are refrigerated at 4°C or below and have a shelf life of 6 months to one year, or until degradation is apparent. Stock standards are usually obtained commercially. Working standards are prepared from stocks and are used directly for instrument calibration or spiking into samples or extracts. Working

standards are stored at -10°C to -20°C and must not be used after 90 d from preparation.

Table I lists the analytical working standards specified by EPA protocol to be used in the analysis of base/neutral acid extractables. They are readily available from any number of chemical suppliers as neat standards or as stock solutions. Currently, we use standard mixes formulated by Ultra Scientific, Inc.

TABLE I. BASE/NEUTRAL/ACID ANALYTICAL STANDARDS

Standard name	Components	Conc. (μg/mL)	Solvent
BNA surrogate mix	2-Fluorophenol (acid)	100.0	Methanol
	Phenol-d_5 (acid)	100.0	
	Nitrobenzene-d_8 (B/N)	50.0	
	2-Fluorobiphenyl (B/N)	50.0	
	2,4,6-Tribromophenol (acid)	100.0	
	Terphenyl-d_{14} (B/N)	50.0	
BNA matrix spike mix	Phenol	100.0	Methanol
	2-Chlorophenol	100.0	
	1,4-Dichlorobenzene	50.0	
	N-Nitroso-di-n-propylamine	50.0	
	1,2,4-Trichlorobenzene	50.0	
	4-Chloro-3-methylphenol	100.0	
	Acenaphthene	50.0	
	4-Nitrophenol	100.0	
	2,4-Dinitrotoluene	50.0	
	Pentachlorophenol	100.0	
	Pyrene	50.0	

TABLE I. (cont)

Standard name	Components	Conc. (μg/mL)	Solvent
Internal standard mix	1,4-Dichlorobenzene-d_4	4000	Methylene chloride
	Naphthalene-d_8	4000	
	Acenaphthene-d_{10}	4000	
	Phenanthrene-d_{10}	4000	
	Chrysene-d_{12}	4000	
	Perylene-d_{12}	4000	
DFTPP	Decafluorotriphenylphosphine	50.0	Methylene chloride
Initial calibration mix	See Table X	20.0 50.0 80.0 120.0 160.0	Methylene chloride
Daily calibration mix	See Table X	50.0	Methylene chloride
Alumina equivalency standard	See BNA surrogate	50/100	50% Hexane/ acetone

9.2. Surrogate compounds. The surrogates closely resemble target compounds chemically but are not normally encountered in nature. Before extraction, each sample is fortified with a known concentration of surrogate mix. Evaluating recoveries gives a measure of the method efficiency relative to any given matrix.

9.3. Matrix spike compounds. These compounds are used to document analytical precision and accuracy, the objective being to identify trends in method performance on both a long- and short-term basis. Specific analytes have been designated to be used as matrix spike compounds. Known concentrations of

matrix spike solution are added to duplicate representative samples before extraction. Matrix spike and spike duplicate data is generated at least once for every 20 samples analyzed.

9.4. Internal Standards (ISs). The IS compounds are added to extracts immediately before instrumental analysis. They are used to facilitate both qualitative and quantitative analysis. Extracts are spiked with IS mix so that a final concentration of 40 μg/mL of each component is obtained.

9.5. Decafluorotriphenylphosphine (DFTPP). DFTPP is used to verify the performance of the mass spectrometer. The DFTPP spectrum must meet established EPA ion abundance criteria before calibrating the instrument and analyzing samples. The working standard DFTPP concentration is 50 μg/mL in CH_2Cl_2. DFTPP can be added to the daily calibration standard.

9.6. Initial calibration standards. These standards contain all target compounds of interest at five different concentrations. Typically, these are 20.0, 50.0, 80.0, 120.0, and 160.0 μg/mL of each analyte. The standards are made by volumetric dilution of 2000 μg/mL stock standards with methylene chloride. Appropriate amounts of internal standards and surrogates are included.

9.7. Daily calibration standards. The standards contain 50.0 μg/mL of all target compounds of interest in methylene chloride. They are used to demonstrate instrument stability in terms of analyte response (response factor) and relative retention time.

9.8. Alumina equivalency standard. This standard is prepared in the same manner as the BNA surrogate standard working solution except 50:50 hexane/acetone is used as the solvent. It is used to evaluate the efficiency of the alumina column cleanup when used.

10. Sample Extraction

Because of the variety of matrices, preparation steps, and procedures available, each will be documented as a unique method in the following section.

CAUTION: These procedures use large quantities of methylene chloride, a suspected carcinogen. Wear appropriate personal protective equipment, use safe work practices, and perform all procedures in a fume hood.

10.1. Extracting low-level BNAs in water and waste water by continuous liquid/liquid extraction (CLLE).

10.1.1. Assemble the extractors. Rinse all glassware with methylene chloride and allow to dry before using. Discard rinse in a properly labeled waste container.

10.1.2. Place the extractor in a support and attach a 500-mL round bottom flask containing Teflon boiling stones and 250 mL of CH_2Cl_2. Position the round bottom flask in a heating mantle. Pour 250 mL CH_2Cl_2 into the extractor body.

10.1.3. Shake the sample container to suspend any particulate material and to homogenize the sample.

10.1.4. Determine the initial sample pH by removing approximately 1.0 mL of sample with a Pasteur pipette and wetting a wide range pH indicator strip. Record this measurement on the sample preparation benchsheet.

10.1.5. Pour the sample into a 1000-mL graduated cylinder and record the volume to the nearest 5 mL. The recommended sample volume is 1.0 L but in practice may be slightly less.

10.1.6. Transfer the sample to an assembled extractor containing 250 mL of methylene chloride. This should be done slowly to avoid getting water into the narrow side arm or round bottom flask.

10.1.7. Add 1.0 mL of BNA surrogate mix to all samples with a disposable pipette. Ensure that the pipette tip is below the liquid surface when transferring this mixture. Stir thoroughly. Repeat with BNA matrix spiking solution where required.

10.1.8. Add enough reagent water to the extractor to allow it to function properly. Adjust the pH to >12 with 10 N sodium hydroxide (6 mL should be sufficient). If more than 10 mL is required, make a notation on the sample prep anomaly form.

10.1.9. Place the condenser on the extractor, turn on the heating mantle, check all joints for leakage, and reflux for 18 h. The round bottom flask will contain the base-neutral compounds.

10.1.10. After refluxing, allow the round bottom flask to cool to ambient temperature, remove, cover, and refrigerate until ready to concentrate. Attach another round bottom flask containing 250 mL of CH_2Cl_2 and boiling stones. Adjust the sample pH to < 2 with 50:50 sulfuric acid (5 mL should be sufficient). Make note of any sample requiring excessive acid to reach this endpoint.

10.1.11. Reflux for an additional 18 h. The contents of this round bottom flask contain the acid extractables. Cover and refrigerate the flask until ready to concentrate the extract.

10.1.12. Proceed to extract concentration, Section 12.

10.2. Extracting low-level BNAs in water by separatory funnel shakeout.

NOTE: The preferred extraction method is CCLE (Step 10.1). The separatory funnel shakeout may not be used for mixed-waste samples.

10.2.1. Rinse all glassware with methylene chloride and allow to dry before use.

10.2.2. Shake the sample container to homogenize and suspend the sediment.

10.2.3. Determine the initial sample pH by removing 1.0 mL with a Pasteur pipette and wetting a wide range pH indicator strip. Record the measurement on the sample preparation benchsheet.

10.2.4. Transfer the sample to a 1.0-L graduated cylinder and record the volume to the nearest 5.0 mL. Recommended sample volume is 1.0 L but in practice may be slightly less.

10.2.5. Pour the sample aliquots into 2.0-L separatory funnels fitted with Teflon stopcocks and glass stoppers. Using a disposable glass pipette, add 1.0 mL of surrogate standard mix to all samples and blanks. Add 1.0 mL of matrix spike mix to the appropriate samples in a similar manner. Ensure that the pipette tip is below the liquid surface and stir immediately.

10.2.6. Adjust the sample pH to >12 with approximately 6.0 mL of 10 N sodium hydroxide. Any sample that requires the addition of excessive base should be noted on the sample prep anomaly form.

10.2.7. Add 60 mL of methylene chloride to all separatory funnels.

CAUTION: Methylene chloride is extremely volatile. Pressure within the separatory funnel will build rapidly, requiring frequent venting.

Shake each funnel for 2 min, venting as necessary. Allow the phases to separate. If an emulsion forms, use whatever means are necessary to separate the phases. If this cannot be done, the sample and the methylene chloride should be transferred to a continous liquid-liquid extractor to complete sample extraction.

10.2.8. After phase separation is complete, draw the methylene chloride (lower layer) into a 500-mL Erlenmeyer flask or 400-mL beaker. Cover with aluminum foil.

10.2.9. Repeat this extraction two more times and combine the extracts (do not re-spike surrogates or matrix spikes). This fraction contains the base/neutral analytes.

10.2.10. Adjust the sample pH to <2 with 50% sulfuric acid. This should require approximately 5.0 mL. Any sample requiring excessive amounts of acid to reach this endpoint should be noted on the sample prep anomaly form.

10.2.11. Extract the sample three more times with 60-mL portions of methylene chloride. Combine these extracts with the base/neutral fraction or, optionally, keep separate if either fraction contains large amounts of coextracted material.

10.2.12. If water is present in the organic phase, a small amount of granular sodium sulfate can be added to the flask to facilitate drying.

10.2.13. Cover the flasks with aluminum foil and refrigerate until the extracts can be concentrated as described in Section 12.

10.3. Extracting low-level BNAs and organochlorine pesticides from aqueous matrices using continuous liquid/liquid extraction (CLLE).

EPA Contract Laboratory Program (EPA-CLP) semivolatile analytical protocol allows for the simultaneous extraction of base/neutral acid extractables, PCBs, and organochlorine pesticides. Once the extract has been concentrated to 10 mL, it is split and further manipulated to enable analysis for organochlorine pesticides and PCBs by GC/ECD and GC/MS.

10.3.1. Rinse all glassware with solvent before use.

10.3.2. Assemble the extractors. Rinse all glassware with methylene chloride and allow to dry before use. Discard the rinse in a properly labeled waste container.

10.3.3. Place the extractor in a support and attach a 500-mL round bottom flask containing Teflon boiling stones and 250 mL of CH_2Cl_2 . Position the round bottom flask in a heating mantle. Pour 250 mL of CH_2Cl_2 into the extractor body.

10.3.4. Shake the sample container to suspend any particulate material and to homogenize the sample.

10.3.5. Determine the initial sample pH by removing approximately 1.0-mL of sample with a Pasteur pipette and wetting a wide range pH indicator strip. Record this measurement on the sample preparation benchsheet.

10.3.6. Pour the sample into a 1000-mL graduated cylinder and record the volume to the nearest 5 mL. The recommended sample volume is 1.0 L but in practice may be slightly less.

10.3.7. Transfer the sample to an assembled extractor containing 250 mL of methylene chloride. This should be done slowly to avoid getting water into the narrow side arm or round bottom flask.

10.3.8. Add 1.0 mL of BNA surrogate mix to all samples, using a disposable pipette. Ensure that the pipette tip is below the liquid surface when transferring this mixture. Stir thoroughly. Repeat with the BNA matrix spiking solution where required.

10.3.9. In an identical manner add pesticide surrogate and spike mixes where appropriate.

10.3.10. Add enough reagent water to the extractor to allow it to function properly. Adjust the pH to >12 with 10 N sodium hydroxide (6 mL should be sufficient). If more than 10 mL is required, make a notation on the sample prep anomaly form.

10.3.11. Place the condenser on the extractor, turn on heating mantle, check all joints for leakage, and reflux for 18 h. The round bottom flask will contain the base-neutral compounds.

10.3.12. After refluxing, allow the round bottom flask to cool to ambient temperature, remove, cover, and refrigerate until ready to concentrate. Attach another round bottom flask containing 250 mL of CH_2Cl_2 and boiling stones. Adjust the sample pH to <2 with 50:50 sulfuric acid (5 mL should be sufficient). Make note of any sample requiring excessive acid to reach this endpoint.

10.3.13. Reflux for an additional 18 h. The contents of this round bottom flask contain the acid extractables. Cover and refrigerate the flask until ready to concentrate the extract.

10.3.14. Proceed to extract concentration, Section 12.

11. Sample Preparation: Dilution of an Organic Waste.

11.1. Infrequently, a matrix such as drum waste is encountered which can be analyzed by direct injection. This requires minimal sample preparation and generally includes simple dilution with an appropriate solvent.

11.2. Dilution is necessary to avoid overloading the detector and to minimize contamination of the analytical system.

12. Concentration of Extracts from Aqueous Matrices

Traditional Kuderna-Danish (KD) and nitrogen evaporation techniques.

12.1. Rinse all glassware with solvent before use.

12.2. Attach a 15-mL receiver tube to a 500-mL KD flask and add one Teflon boiling stone.

12.3. Place a small pad of glass wool in the bottom of a glass funnel (Kimax 58 or equivalent). Add granular sodium sulfate until the funnel is 2/3 full and tap to settle the granules. Pre-rinse the Na_2SO_4 with methylene chloride.

12.4. Quantitatively transfer the base/neutral fraction to the KD concentrator by pouring it through the sodium sulfate. Complete the transfer by rinsing the extract container and the funnel with methylene chloride (approximately 20 mL). Do not discard the funnel containing sodium sulfate, as it will be used to dry the subsequent acid fraction.

12.5. Attach a three-ball Snyder column to the KD and place it on a hot water bath (75-90°C). Immediately pre-wet the Snyder column with several mL of methylene chloride to prevent sample bumping.

12.6. Concentrate the extract to an apparent volume of 10 mL and remove from heat. Allow the KD concentrator to drain and cool to ambient temperature before removing the Snyder column.

12.7. Quantitatively transfer the acid fraction to the KD concentrator by pouring it through the same funnel used for the base/neutral fraction. Complete the transfer by rinsing the extract container and funnel with methylene chloride. Add a fresh Teflon boiling stone to the flask and reattach the Snyder column.

12.8. Return the KD to the water bath and immediately wet the column with methylene chloride to prevent bumping.

12.9. Concentrate the extract to an apparent volume of 4.0 mL and remove from heat. Do not permit the extract to go dry because many analytes are sensitive to thermal degradation. Allow the KD concentrator to drain and cool to ambient temperature.

12.10. Invert the Snyder column and rinse it with a small amount (about 2.0 mL) of methylene chloride. Collect the rinse in the KD flask. Rinse the inside walls of the KD flask one more time with a small amount of methylene chloride. Collect rinse in the receiver tube.

12.11. Place the receiver tube in a water bath that is near, but below, the boiling point of the solvent. Direct a gentle stream of dry nitrogen over the surface of the

solvent. Periodically rinse the inside walls of the receiver tube with methylene chloride to prevent loss of analyte. Allow the extract to evaporate to a volume of approximately 0.5 mL and remove from the bath.

Occasionally an extract will stop evaporating, form a precipitate, or be highly colored. In these instances concentrate the extract to 10.0 mL and clean it using gel permeation chromatography (GPC) (refer to Method EO520).

12.12. If the extract has evaporated to 0.5 mL, quantitatively transfer the extract to a 1.0-mL volumetric tube and dilute to volume with methylene chloride. Transfer the concentrated extract to a 1.8-mL screw cap vial which has been appropriately labeled. Refrigerate at 4°C until ready to analyze.

13. Extract Split

Used for low-level BNAs and organochlorine pesticides in water. Following the procedure described in Section 12, concentrate the gross extract to 10.0 mL with methylene chloride. If an extract is highly colored or contains large amounts of coextracted interference, it needs to be cleaned by GPC according to Method EO520 before splitting. Once GPC cleaning is complete, proceed with this section.

13.1. With an SMI micropipette, transfer 500 µL of the 10.0-mL extract to a receiver tube containing 5.0 mL of hexane and mix thoroughly. This is the pesticide fraction.

13.2. Using nitrogen blowdown, concentrate the remaining 9.5 mL to 0.95 mL of methylene chloride. This is the BNA fraction.

13.3. Complete the split and solvent exchange by concentrating the pesticide fraction to 0.5 mL of hexane.

NOTE: Start nitrogen evaporation with the bath temperature at 40°C. After 5 min, increase the temperature to 65°C and continue concentrating, occasionally rinsing the tubes with hexane.

13.4. Remove the receiver tubes from the bath and allow to cool. Add 0.5 mL of acetone to each tube to give a total volume of 1.0 mL. Clean the pesticide fraction by alumina column chromatography. Refer to Section 14.

14. Pesticide Fraction Cleanup

Alumina column chromatography. Adsorption chromatography relies on the ability of solid material to retain solute by surface adsorption. The adsorbed material can then be selectively eluted depending upon the organic solvent chosen, analyte solubility, and polarity.

A neutral alumina cleanup is used to remove the BNA surrogates from the pesticide fraction of extracts which have been split for BNA/OCP analysis.

14.1. Prepare Super I neutral alumina to activity III by adding 7% reagent water (vol/wt) to the alumina. In a tightly sealed glass container, shake on a wrist action shaker for 2 h or shake vigorously by hand for 5-10 min. No lumps should be present.

14.2. Loosely plug a 10-mL disposable glass pipette with glass wool. Add 3.0 g of activity III alumina and tap to settle. Do not pre-wet the alumina.

14.3. With a Pasteur pipette, add the entire 1.0 mL extract to the top of the alumina and immediately rinse the concentrator tube with 1.0 mL hexane. Add this rinse to the alumina. Collect the eluate in another clean receiver tube. Continue eluting the alumina with 9.0 mL of hexane. Do not allow the column to go dry during addition and elution of the sample extract.

14.4. Concentrate the eluate to 1.0 mL using nitrogen blowdown techniques. Transfer the extract to an appropriately labeled 1.8-mL screw cap vial and refrigerate at 4°C until ready to analyze.

15. GC/MS Calibration

15.1. This application uses a slightly polar methyl silicone stationary phase bonded to a fused silica capillary column such as the J&W DB-5.625, Supelco SPB-5, or Quadrex 007-2. Column dimensions are nominally 30-m x 0.25-mm-i.d., 0.50-μm film thickness.

15.2. The following approximate gas chromatographic parameters are used for data acquisition. These parameters may change in order to optimize chromatography on a given analytical system:

Initial temp: 35°C	Carrier: He
Initial time: 4.5 min.	Flow: 1.0 mL/min.
Final temp: 290°C	Inlet temp: 280°C
Final time: 15 min.	Interface temp: 300°C
Rate: 10°C/min.	

15.3. DFTPP tuning.

15.3.1. The quadrupole mass spectrometer is operated in a scanning, electron impact ionization mode. The spectrometer is hardware-tuned with a calibration compound perfluorotributylamine (PFTBA) such that a 50-ng injection of decafluorotriphenylphosphine (DFTPP) results in a spectrum which satisfies the key ion abundance and resolution criteria listed in Table II.

TABLE II. KEY ION ABUNDANCE AND RESOLUTION CRITERIA	
Mass	Ion abundance criteria
51	30.0-60.0% mass 198
68	< 2.0% of mass 69
70	< 2.0% of mass 69
127	40.0-60.0% of mass 198
197	< 1.0% of mass 198
198	base peak, 100% relative abundance
199	5.0-9.0% of mass 198
275	10.0-30.0% of mass 198
365	> 1.00% of mass 198
441	present but less than mass 443
442	> 40.0% of mass 198
443	17.0-23.0% of mass 442

15.3.2. Before any standards or samples are analyzed, these tuning criteria must be met and documented for each mass spectrometer used for this application. The criteria must be demonstrated every 12 h. Specifically, no standards, samples, or QC samples may be injected after 12 h from the injection time of DFTPP. DFTPP may be combined with the continuing calibration standard.

15.3.3. If the ion abundance criteria are not met, corrective actions, such as re-tuning, are taken. Failure to meet DFTPP criteria may indicate the need to clean the analyzer source.

15.4. Initial calibration.

15.4.1. Once the mass spectrometer is hardware-tuned, it must be initially calibrated with a minimum of five standard concentrations to demonstrate response linearity. Table III lists those analytes requiring only four initial calibration points. Analyze standards at concentrations of 20, 50, 80, 120, and 160 μg/mL. The five-point calibration must meet response factor criteria specified by the USEPA. The initial calibration must be run when the continuing calibration fails or when the analytical system is significantly changed, such as when a new column is installed or when the analyzer source is cleaned.

TABLE III. COMPOUNDS REQUIRING A FOUR-POINT CALIBRATION (USEPA-CLP SOW 2/88)	
Benzoic acid	2,4-Dinitrophenol
2,4,5-Trichlorophenol	2-Nitroaniline
3-Nitroaniline	4-Nitroaniline
4-Nitrophenol	Pentachlorophenol
4,6-Dinitro-2-methylphenol	

15.4.2. Calculate response factors (RF) for all individual calibration compounds. The percent relative standard deviation (% RSD) for each compound should be less than 30% and must be less than 30% for all calibration check compounds (CCC). See Table IV.

TABLE IV. CONTINUING CALIBRATION CHECK COMPOUNDS (CCC)	
% RSD MUST BE <30.0	
Acenaphthene	4-Chloro-3-methylphenol
1,4-Dichlorobenzene	2,4-Dichlorophenol
Hexachlorobutadiene	2-Nitrophenol
N-Nitrosodiphenylamine	Phenol
Di-n-octyl phthalate	Pentachlorophenol
Fluoranthene	2,4,6-Trichlorophenol
Benzo(a)pyrene	

Response factors are calculated using the following equation:

$$RF = \frac{(Ax)\ (Cis)}{(Ais)\ (Cx)} ,$$

where Ax = area of the characteristic ion for the compound being measured,

Cis = concentration of the internal standard (ng/μL),

Ais = area of the characteristic ion for the nearest internal standard, and

Cx = concentration of the compound being measured (ng/μL).

Percent relative standard deviation is calculated using the following equation:

$$\%RSD = \frac{(SD)}{(RF)} \times 100$$

15.4.3. The minimum average response for system performance check compounds (SPCCs) must be 0.050 or greater. Table V contains a list of these compounds.

TABLE V. SYSTEM PERFORMANCE CHECK COMPOUNDS (SPCC)—AVERAGE RF MUST BE >0.05
N-Nitroso-di-n-propylamine
Hexachlorocyclopentadiene
2,4-Dinitrophenol
4-Nitrophenol

15.4.4. Relative retention times of each compound from each standard should agree within 0.06 retention time units.

15.4.5. If the preceding criteria are not met, corrective actions must be taken. The individual curve points or the entire curve is reanalyzed.

15.5. Continuing calibration.

Every day, a continuing calibration standard containing 50 μg/mL of each target analyte is analyzed. The relative response factor for each analyte is compared with the corresponding average responses factor obtained from the initial calibration. The continuing calibration must be analyzed within the 12-h DFTPP performance check period.

15.5.1. Each continuing calibration must meet the following criteria:

15.5.1.1. All system performance check compounds must have a minimum response factor not less than 0.050. Refer to Table V.

15.5.1.2. The percent difference between the continuing calibration relative response factor and the average relative response from the initial calibration must not be greater than 25% for any CCC. Table IV lists these analytes. If this requirement is met the calibration is assumed to be valid.

The percent difference is calculated using the following equation:

$$\% \text{ Diff} = \frac{RFi - RFc}{RFi} \times 100 \quad ,$$

where RFi = average response factor from the initial calibration, and
RFc = response factor from the current continuing calibration.

15.5.1.3. The percent difference between the continuing calibration relative response factor and the average relative response from the initial calibration should not be greater than 20% for any target compound for which the instrument is calibrated. If the percent difference exceeds this value it is considered as a warning limit.

15.5.2. If the preceding calibration criteria are not met, corrective action is taken and the continuing calibration standard is reanalyzed. If the criteria are still not met, a new five-point initial calibration is performed.

15.5.3. Once all continuing calibration criteria have been met, the method ID file is updated with the current response factors (RFs) and retention times before acquiring and processing sample data.

15.5.4. The method ID file contains retention-time and mass-spectral data pertinent to a given target compound list. It is defined and edited by the user and resides on the GC/MS data system.

16. Quality Assurance and Data Interpretation Requirements

16.1. All calibration criteria listed in the previous section must be met before samples are analyzed.

16.2. Method blank analysis. A method blank is a volume of reagent water or a purified solid material which is taken through the entire analytical procedure. The weight or volume of the blank must approximate that of samples being analyzed. The criteria listed below are checked directly after blank analysis.

16.2.1. Blanks are analyzed at a frequency of one for every 20 samples of similar matrix or whenever samples are extracted by the same procedure, whichever is more frequent.

16.2.2. The method blank should contain less than five times the practical quantitation limit (PQL) of phthalate esters in the target compound list.

16.2.3. All other analytes present on the target compound list should not be present at concentrations greater than the PQL.

16.2.4. Recovery of all surrogate compounds must be within specified limits (Table VI). If these criteria is not met, reanalyze or reextract another blank to determine whether the incident is isolated or an out-of-control status exists.

16.3. Surrogate spike requirements. Each sample prepared and analyzed for semivolatile compounds is fortified with known amounts of base/neutral and acid extractable compounds. By evaluating their recovery, measured as a percentage, the analyst can draw conclusions concerning the analytical efficiency on a sample-by-sample basis.

16.3.1. Surrogate spike recoveries are considered to be acceptable if they fall within the ranges specified in Table VI.

Surrogate recovery from samples must meet two conditions to be considered unacceptable: (1) recovery of any one surrogate in either the base-neutral or acid fraction is less than 10% and (2) recoveries of any two surrogate compounds in either the base/neutral or acid fraction are out of recovery limits.

TABLE VI. BNA SURROGATE SPIKE PECOVERY LIMITS IN PERCENT		
Surrogate Compound	Water	Soil
Nitrobenzene-d_5	35-114	23-120
2-Fluorobiphenyl	43-116	30-115
Terphenyl-d_{14}	33-141	18-137
Phenol-d_5	10-94	24-113
2-Fluorophenol	21-100	25-121
2,4,6-Tribromophenol	10-123	19-122

16.3.2. When surrogate spike recoveries are determined to be out of control, the analyst needs to determine if the cause is matrix- or process-dependent. Whichever conclusion is reached needs to be addressed in the case narrative and/or anomaly summary. Corrective action will be implemented to alleviate the causes of the out-of-control condition.

16.4. Matrix spike and matrix spike duplicate recovery requirements. In order to evaluate the matrix effect of a sample upon the analytical methodology employed, known concentrations of base/neutral and acid target compounds are added to duplicates of a given sample. Table VII is a list of spike compounds. The sample chosen to be spiked should be representative of the samples from a given project. Reagent water is frequently used as a spiking medium for aqueous samples.

TABLE VII. BNA MATRIX SPIKE COMPOUNDS		
Compound	Fraction	Amount added (μg)
1,2,4-Trichlorobenzene	BN	50
Acenaphthene	BN	50
2,4-Dinitrotoluene	BN	50
Pyrene	BN	50
N-Nitroso-di-n-propylamine	BN	50
1,4-Dichlorobenzene	BN	50
Pentachlorophenol	ACID	100

TABLE VII. (cont)		
Compound	Fraction	Amount added (μg)
Phenol	ACID	100
2-Chlorophenol	ACID	100
4-Chloro-3-methylphenol	ACID	100
4-Nitrophenol	ACID	100

16.4.1. Matrix spike and matrix spike duplicate data are generated once for every 20 samples of a given matrix type prepared by the same method.

16.4.2. Matrix spike/matrix spike duplicates and the original unspiked sample must be concentrated to the same final volume and analyzed at the same dilution level. However, do not dilute matrix spike/matrix spike duplicate samples for non-spiked target compounds.

16.4.3. Spike recovery is evaluated in terms of percent recovery and the relative percent difference (RPD) between individual spike compounds in the MS and MSD. This data can be used to evaluate the long term precision and accuracy of the method. Table VIII gives spike recovery limits.

TABLE VIII. BNA MATRIX SPIKE RECOVERY LIMITS - WATER

Compound	% Recovered	RPD
1,2,4-Trichlorobenzene	39 - 98	28
Acenaphthene	46 - 118	31
2,4-Dinitrotoluene	24 - 96	38
Pyrene	26 - 127	31
N-Nitroso-di-n-propylamine	41 - 116	38
1,4-Dichlorobenzene	36 - 97	28
Pentachlorophenol	9 - 103	50
Phenol	12 - 89	42

TABLE VIII. (cont)				
Compound	% Recovered			RPD
2-Chlorophenol	27	-	123	40
4-Chloro-3-methylphenol	23	-	97	42
4-Nitrophenol	10	-	80	50

16.5. Blind spikes. It is EM-9 QA/QC policy to prepare and submit blind spikes on a regular basis as an independent check of method accuracy. Standard reference materials resemble submitted matrices as closely as possible.

16.6. Sample analysis. Samples can be analyzed upon successful completion of the calibration procedures addressed in Section 15. Sample analysis injection times must be within 12 h of the injection time of the DFTPP analysis. Samples must be acquired using the conditions by which the standard was acquired. Samples must be analyzed within 40 d of sample extraction.

16.6.1. Internal standard response from each sample injection must agree within a factor of two (-50% to 200%) with the internal standard response from the most recent continuing calibration standard.

16.6.2. Sample internal standard retention times must not differ by more than 30 s from the continuing calibration standard.

16.6.3. Positively identified target compound concentrations must fall within the demonstrated linear range. Where necessary, sample extracts are diluted and reanalyzed. The undiluted and one diluted analysis are usually reported.

16.6.4. Discrete chromatographic peaks which are not identified as target compounds are treated as tentatively identified compounds (TICs). These can be identified through comparison of unknown spectra with a mass spectral database, at the client's request.

16.7. Qualitative analysis.

16.7.1. Target compounds detected in sample injections are positively identified on the basis of relative retention time (RRT) and mass spectral criteria. Table IX lists analytes and their characteristic ions.

16.7.1.1. The sample component relative retention time must agree within ± 0.06 RRT units of that of the same component in the continuing calibration standard.

16.7.1.2. Qualitative verification requires the following conditions to be met:

- All ions present in the standard mass spectrum at a relative intensity >10% must be present in the sample spectrum.

- The relative intensities of ions specified above must agree within 20%.

- Ions with relative intensity >10% in the sample spectrum but not present in the standard spectrum must be accounted for by generating extracted ion current profiles (EICP) for the relevant ions.

- Compounds present in samples but determined not to be target compounds are treated as tentatively identified compounds (TICs). A maximum of 20 discrete compounds may be identified at a client's request, through comparison of unknown spectra with a mass spectral library database. TICs will be searched only when their relative ion concentration (RIC) area is greater than 25% of the nearest internal standard RIC area.

16.8. Quantitative analysis. When a target compound has been positively identified, quantitation is based on the EICP of the primary characteristic ion using the internal standard technique. The internal standard used will be the one nearest the retention time of the analyte.

16.8.1. The following calculations are used to quantify target analytes in low-level aqueous samples:

$$\text{Conc } (\mu g/L) = \frac{(Ax)\ (Is)\ (Vt)}{(Ais)\ (RF)\ (Vi)\ (Vo)} ,$$

where Ax = area of the characteristic ion for the analyte being measured,
Is = amount of internal standard injected (ng),
Vt = volume of total extract taking into account any dilutions,
Ais = area of characteristic ion for the internal standard,
RF = response factor for the compound being measured,
Vi = volume of extract injected (μL), and
Vo = volume of water extracted.

16.8.2. Calculation of response factors (RF). This applies to 1.0-μL injections of standards for continuing and initial calibration purposes.

$$RF = \frac{(Ax)\ (Cis)}{(Ais)\ (Cx)},$$

where Ax = area of the characteristic ion for the analyte being measured,
Cis = concentration of the specific internal standard (40 ng/μL),
Ais = area of the characteristic ion of the specific internal standard, and
Cx = concentration of the compound being measured (ng/μL).

17. Reporting

17.1. Analytical results are reported using one of two target compound lists (TCLs) depending upon the requirements of the submitter. The Appendix 9 TCL list (ground water monitoring) includes the Hazardous Substance List (HSL) plus 43 additional analytes. Table X lists HSL target compounds and Table XI lists the Appendix 9 target compounds. Compound on the HSL list are routinely analyzed for and reported.

18. Proper Waste Disposal Practices

18.1. General waste management.

18.1.1. Each analyst within the section shall be given Waste Generator training by EM-8 within 90 days of date of hire.

18.1.2. Wherever possible, the generation of waste shall be minimized through reduction, reuse, or recycling. Wherever possible, containers should be segregated to reflect the nature of the hazardous waste and the eventual waste-disposal methods. For example, chlorinated solvent wastes should be segregated from flammable, nonchlorinated solvents, and >50-ppm contaminated PCB waste should be segregated from <50-ppm PCB contaminated waste. This is especially important in analysis areas where the waste generated is considered to be mixed waste.

18.1.3. Categorized the waste using a Waste Profile Form from EM-8.

18.1.4. Upon completion of a Waste Profile Form, the waste is disposed of by completing a Waste Disposal Request Form from EM-7. Approximately

30 days is required for the disposal of waste after the completion of the listed forms.

18.2. Solid waste.

18.2.1. Solid hazardous waste, such as contaminated paper towels, pipettes, spent syringes, and glass vials, is accumulated in a covered plastic container lined with a plastic bag. The container is labeled with a hazardous waste label identifying the hazard, the type of material being stored (i.e., pipettes, paper towels, etc.), the accumulation start date, and the laboratory of origin.

18.2.2. The waste container is opened only for the time necessary to add the waste.

18.3. Liquid waste.

18.3.1. Liquid wastes, such as spent samples and spent solvents that are not reusable, are accumulated in glass or steel containers appropriate for the type of sample being stored. For example, caustic materials should be stored in glass containers whereas spent solvents that are not to be recycled should be stored in metal containers.

18.3.2. All containers storing hazardous liquid materials must be secondarily contained. The container is labeled with a hazardous waste label identifying the hazard, the type of material being stored, the accumulation start date, and the laboratory of origin.

18.3.3. The waste container is opened only for the time necessary to add the waste.

18.4. Unused samples.

18.4.1. Return unused environmental samples to the Sample Management section for disposal.

19. Source Material

19.1. "USEPA Contract Laboratory Program, Statement of Work for Organic Analysis, Multi-Media, Multi Concentration," Document no. OLMO1.0 USEPA, October 1986.

19.2. USEPA, "Test Methods for Evaluating Solid Wastes, Physical/Chemical Methods," (SW846), December 1987.

19.3. Sorbent Extraction Technology, K. C. Van Horne, Analytical International, Inc., 1985.

19.4. "Hazardous and Mixed Waste," Administrative Requirement 10-3, in *Environment, Safety, and Health Manual*, Los Alamos National Laboratory Manual, Chapter 1 (most recent edition).

TABLE IX.
CHARACTERISTIC IONS FOR SEMIVOLATILE COMPOUNDS

Compound	Retention time (min)	Primary ion	Secondary ion(s)
2-Picoline	3.75[a]	93	66, 92
Aniline	5.68	93	66, 65
Phenol	5.77	94	65, 66
Bis(2-chloroethyl) ether	5.82	93	63, 95
2-Chlorophenol	5.97	128	64, 130
1,3-Dichlorobenzene	6.27	146	148, 111
1,4-Dichlorobenzene-d_4 (I.S.)	6.35	152	150, 115
1,4-Dichlorobenzene	6.40	146	148, 111
Benzyl alcohol	6.78	108	79, 77
1,2-Dichlorobenzene	6.85	146	148, 111
N-Nitrosomethylethylamine	6.97	88	42, 88, 43, 56
Bis(2-chloroisopropyl) ether	7.22	45	77, 121
Ethyl carbamate	7.27	62	62, 44, 45, 74
Thiophenol (Benzenethiol)	7.42	110	110, 66, 109, 84
Methyl methanesulfonate	7.48	80	80, 79, 65, 95
N-Nitroso-di-n-propylamine	7.55	70	42, 101, 130
Hexachloroethane	7.65	117	201, 199
Maleic anhydride	7.65	54	54, 98, 53, 44
Nitrobenzene	7.87	77	123, 65
Isophorone	8.53	82	95, 138
N-Nitrosodiethylamine	8.70	102	102, 42, 57, 44, 56
2-Nitrophenol	8.75	139	109, 65
2,4-Dimethylphenol	9.03	122	107, 121
p-Benzoquinone	9.13	108	54, 108, 82, 80
Bis (2-chloroethoxy) methane	9.23	93	95, 123
Benzoic acid	9.38	122	105, 77

TABLE IX. (cont)

Compound	Retention time (min)	Primary ion	Secondary ion(s)
2,4-Dichlorophenol	9.48	162	164, 98
Trimethyl phosphate	9.53	110	110, 79, 95, 109, 140
Ethyl methanesulfonate	9.62	79	79, 109, 97, 45, 65
1,2,4-Trichlorobenzene	9.67	180	182, 145
Naphthalene-d_8 (I.S.)	9.75	136	68
Naphthalene	9.82	128	129, 127
Hexachlorobutadiene	10.43	225	223, 227
Tetraethyl pyrophosphate	11.07	99	99, 155, 127, 81, 109
Diethyl sulfate	11.37	139	139, 45, 59, 99, 111, 125
4-Chloro-3-methylphenol	11.68	107	144, 142
2-Methylnaphthalene	11.87	142	141
2-Methylphenol	12.40	107	107, 108, 77, 79 90
Hexachloropropene	12.45	213	213, 211, 215, 117, 106, 141
Hexachlorocyclopentadiene	12.60	237	235, 272
N-Nitrosopyrrolidine	12.65	100	100, 41, 42, 68, 69
Acetophenone	12.67	105	71, 105, 51, 120
4-Methylphenol	12.82	107	107, 108, 77, 79 90
2,4,6-Trichlorophenol	12.85	196	198, 200
o-Toluidine	12.87	106	106, 107, 77, 51, 79
3-Methylphenol	12.93	107	107, 108, 77, 79, 90
2-Chloronaphthalene	13.30	162	127, 164
N-Nitrosopiperidine	13.55	114	42, 114, 55, 56,41
1,4-Phenylenediamine	13.62	108	108, 80, 53, 54, 52
1-Chloronaphthalene	13.65[a]	162	127, 164
2-Nitroaniline	13.75	65	92, 138
5-Chloro-2-methylaniline	14.28	106	106, 141, 140, 77, 89
Dimethyl phthalate	14.48	163	194, 164

TABLE IX. (cont)

Compound	Retention time (min)	Primary ion	Secondary ion(s)
Acenaphthylene	14.57	152	151, 153
2,6-Dinitrotoluene	14.62	165	63, 89
Phthalic anhydride	14.62	104	104, 76, 50, 148
o-Anisidine	15.00	108	80, 108, 123, 52
3-Nitroaniline	15.02	138	108, 92
Acenaphthene-d_{10} (I.S.)	15.05	164	162, 160
Acenaphthene	15.13	154	153, 152
2,4-Dinitrophenol	15.35	184	63, 154
2,6-Dinitrophenol	15.47	162	162, 164, 126, 98, 63
4-Chloroaniline	15.50	127	127, 129, 65, 92
Isosafrole	15.60	162	162, 131, 104, 77, 51
Dibenzofuran	15.63	168	139
2,4-Diaminotoluene	15.78	121	121, 122, 94, 77, 104
2,4-Dinitrotoluene	15.80	165	63, 89
4-Nitrophenol	15.80	139	109, 65
2-Naphthylamine	16.00[a]	143	115, 116
1,4-Naphthoquinone	16.23	158	158, 104, 102, 76, 50, 130
p-Cresidine	16.45	122	122, 94, 137, 77, 93
Dichlorovos	16.48	109	109, 185, 79, 145
Diethyl phthalate	16.70	149	177, 150
Fluorene	16.70	166	165, 167
2,4,5-Trimethylaniline	16.70	120	120, 135, 134, 91, 77
N-Nitrosodibutylamine	16.73	84	84, 57, 41, 116, 158
4-Chlorophenyl phenyl ether	16.78	204	206, 141
Hydroquinone	16.93	110	110, 81, 53, 55
4,6-Dinitro-2-methylphenol	17.05	198	51, 105
Resorcinol	17.13	110	110, 81, 82, 53, 69

TABLE IX. (cont)

Compound	Retention time (min)	Primary ion	Secondary ion(s)
N-Nitrosodiphenylamine	17.17	169	168, 167
Safrole	17.23	162	162, 162, 104, 77, 103, 135
Hexamethyl phosphoramide	17.33	135	135, 44, 179, 92, 42
3-(Choromethyl)pyridine hydrochloride	17.50	92	92, 127, 129, 65, 39
Diphenylamine	17.54[a]	169	168, 167
1,2,4,5-Tetrachlorobenzene	17.97	216	216, 214, 179, 108, 143, 218
1-Naphthylamine	18.20	143	143, 115, 89, 63
1-Acetyl-2-thiourea	18.22	118	43, 118, 42, 76
4-Bromophenyl phenyl ether	18.27	248	250, 141
Toluene diisocyanate	18.42	174	174, 145, 173, 146, 132, 91
2,4,5-Trichlorophenol	18.47	196	196, 198, 97, 132, 99
Hexachlorobenzene	18.65	284	142, 249
Nicotine	18.70	84	84, 133, 161, 162
Pentachlorophenol	19.25	266	264, 268
5-Nitro-2-methylaniline	19.27	152,	77, 152, 79, 106, 94
Thionazine	19.35	107	96, 107, 97, 143, 79, 68
4-Nitroaniline	19.37	138	138, 65, 108, 92, 80, 39
Phenanthrene-d_{10} (I.S.)	19.55	188	94, 80
Phenanthrene	19.62	178	179, 176
Anthracene	19.77	178	176, 179
1,4-Dinitrobenzene	19.83	168	168, 75, 50, 76, 92, 122
Mevinphos	19.90	127	127, 192, 109, 67, 164

TABLE IX. (cont)

Compound	Retention time (min)	Primary Ion	Secondary Ion(s)
Naled	20.03	109	109, 145, 147, 301, 79, 189
1,3-Dinitrobenzene	20.18	168	168, 76, 50, 75, 92, 122
Diallate (cis or trans)	20.57	86	86, 234, 43, 70
1,2-Dinitrobenzene	20.58	168	168, 50, 63, 74
Diallate (trans or cis)	20.78	86	86, 234, 43, 70
Pentachlorobenzene	21.35	250	250, 252, 108, 248, 215, 254
5-Nitro-2-methoxyaniline	21.50	168	168, 79, 52, 138, 153, 77
Pentachloronitrobenzene	21.72	237	237, 142, 214, 249, 295, 265
4-Nitroquinoline-1-oxide	21.73	174	174, 101, 128, 75, 116
Di-n-butyl phthalate	21.78	149	150, 104
2,3,4,6-Tetrachlorophenol	21.88	232	232, 131, 230, 166, 234, 168
Demeton-o	22.72	88	88, 89, 60, 61, 115, 171
Fluoranthene	23.33	202	101, 203
1,3,5-Trinitrobenzene	23.68	75	75, 74, 213, 120, 91, 63
Dicrotophos	23.82	127	127, 67, 72, 109, 193, 237
Benzidine	23.87	184	92, 185
Trifluralin	23.88	306	306, 43, 264, 41, 290
Bromoxynil	23.90	277	277, 279, 88, 275, 168
Pyrene	24.02	202	200, 203
Monocrothophos	24.08	127	127, 192, 67, 97, 109
Phorate	24.10	75	75, 121, 97, 93, 260
Sulfallate	24.23	188	188, 88, 72, 60, 44
Demeton-s	24.30	88	88, 60, 81, 89, 114, 115
Phenacetin	24.33	108	180, 179, 109, 137, 80
Dimethoate	24.70	87	87, 93, 125, 143, 229

TABLE IX. (cont)

Compound	Retention time (min)	Primary ion	Secondary ion(s)
Phenobarbital	24.70	204	204, 117, 232, 146, 161
Carbofuran	24.90	164	164, 149, 131, 122
Octamethyl pyrophosphoramide	24.95	135	135, 44, 199, 286, 153, 243
4-Aminobiphenyl	25.08	169	169, 168, 170, 115
Terbufos	25.35	231	231, 57, 97, 153, 103
Pronamide	25.48	173	173, 175, 145, 109, 147
Aminoazobenzene	25.72	197	92, 197, 120, 65, 77
Dichlone	25.77	191	191, 163, 226, 228, 135, 193
Dinoseb	25.83	211	211, 163, 147, 117, 240
Disulfoton	25.83	88	88, 97, 89, 142, 186
Fluchloralin	25.88	306	306, 63, 326, 328, 264, 65
Mexacarbate	26.02	165	165, 150, 134, 164, 222
4.4'-Oxydianiline	26.08	200	200, 108, 171, 80, 65
Butyl benzyl phthalate	26.43	149	91, 206
4-Nitrobiphenyl	26.55	199	199, 152, 141, 169, 151
Phosphamidon	26.85	127	127, 264, 72, 109, 138
2-Cyclohoxyl-4,6-dinitrophenol	26.87	231	231, 185, 41, 193, 266
Methyl Parathion	27.03	109	109, 125, 263, 79, 93
Carbaryl	27.17	144	144, 115, 116, 201
Dimethylaminoazobenzene	27.50	225	225, 120, 77, 105, 148, 42
Propylthiouracil	27.68	170	170, 142, 114, 83
Benz(a)anthracene	27.83	228	229, 226
Chrysene-d_{12} (I.S.)	27.88	240	120, 236

TABLE IX. (cont)

Compound	Retention time (min)	Primary ion	Secondary ion(s)
3,3'-Dichlorobenzidine	27.88	252	254, 126
Chrysene	27.97	228	226, 229
Malathion	28.08	173	173, 125, 127, 93, 158
Kepone	28.18	272	272, 274, 237, 178, 143, 270
Fenthion	28.37	278	278, 125, 109, 169, 153
Parathion	28.40	109	109, 97, 291, 139, 155
Anilazine	28.47	239	239, 241, 143, 178, 89
Bis(2-ethylhexyl) phthalate	28.47	149	167, 279
3,3'-Dimethylbenzidine	28.55	212	212, 106, 196, 180
Carbophenothion	28.58	157	157, 97, 121, 342, 159, 199
5-Nitroacenaphthene	28.73	199	199, 152, 169, 141, 115
Methapyrilene	28.77	97	97, 50, 191, 71
Isodrin	28.95	193	193, 66, 195, 263, 265, 147
Captan	29.47	79	79, 149, 77, 119, 117
Chlorfenvinphos	29.53	267	267, 269, 323, 325 295
Crotoxyphos	29.73	127	127, 105, 193, 166
Phosmet	30.03	160	160, 77, 93, 317, 76
EPN	30.11	157	157, 169, 185, 141, 323
Tetrachlorvinphos	30.27	329	109, 329, 331, 79, 333
Di-n-octyl phthalate	30.48	149	167, 43
2-Aminoanthraquinone	30.63	223	223, 167, 195
Barban	30.83	222	222, 51, 87, 224, 257, 153
Aramite	30.92	185	185, 191, 319, 334, 197, 321
Benzo(b)fluoranthene	31.45	252	253, 125

TABLE IX. (cont)

Compound	Retention time (min)	Primary ion	Secondary ion(s)
Nitrofen	31.48	283	283, 285, 202, 139, 253
Benzo(k)fluoranthene	31.55	252	253, 125
Chlorobenzilate	31.77	251	251, 139, 253, 111, 141
Fensulfothion	31.87	293	293, 97, 308, 125, 292
Ethion	32.08	231	231, 97, 153, 125, 121
Diethylstilbestrol	32.15	268	268, 145, 107, 239, 121, 159
Famphur	32.67	218	218, 125, 93, 109, 217
Tri-p-tolyl phosphate[b]	32.75	368	368, 367, 107, 165, 198
Benzo(a)pyrene	32.80	252	253, 125
Perylene-d_{12} (I.S.)	33.05	264	260, 265
7,12-Dimethylbenz(a)anthracene	33.25	256	256, 241, 239, 120
5,5-Diphenylhydantoin	33.40	180	180, 104, 252, 223, 209
Captafol	33.47	79	79, 77, 80, 107
Dinocap	33.47	69	69, 41, 39
Methoxychlor	33.55	227	227, 228, 152, 114, 274, 212
2-Acetylaminofluorene	33.58	181	181, 180, 223, 152
4,4'-Methylenebis-(2-chloroaniline)	34.38	231	231, 266, 268, 140, 195
3,3'-Dimethoxybenzidine	34.47	244	244, 201, 229
3-Methylcholanthrene	35.07	268	268, 252, 253, 126, 134, 113
Phosalone	35.23	182	182, 184, 367, 121, 379
Azinphos-methyl	35.25	160	160, 132, 93, 104, 105
Leptophos	35.28	171	171, 377, 375, 77, 155, 379
Mirex	35.43	272	272, 237, 274, 270 239, 235
Tris(2,3-dibromopropyl phosphate	35.68	201	137, 201, 119, 217, 219, 199
Dibenz(a,j)acridine	36.40	279	279, 280, 277, 250

TABLE IX. (cont)

Compound	Retention time (min)	Primary ion	Secondary ion(s)
Menstranol	36.48	277	277, 310, 174, 147, 242
Coumaphos	37.08	362	362, 226, 210, 364, 97, 109
Indeno(1,2,3-cd)pyrene	39.52	276	138, 227
Dibenz(a,h)anthracene	39.82	278	139, 279
Benzo(g,h,i)perylene	41.43	276	138,277
1,2:4,5-Dibenzopyrene	41.60	302	302, 151, 150, 300
Strychnine	45.15	334	334, 335, 333
Piperonyl sulfoxide	46.43	162	162, 135, 105, 77
Hexachlorophene	47.98	196	196, 198, 209, 211, 406, 408
Aldrin		66	263, 220
Aroclor-1016		222	260, 292
Aroclor-1221		190	224, 260
Aroclor-1232		190	224, 260
Aroclor-1242		222	256, 292
Aroclor-1248		292	362, 326
Aroclor-1254		292	362, 326
Aroclor-1260		360	362, 394
α-BHC		183	181, 109
β-BHC		181	183, 109
4,4'-DDD		235	237, 165
4,4'-DDE		246	248, 176
4,4'-DDT		235	237,165
Dieldrin		79	263, 279
1,2-Diphenylhydrazine		77	105, 182
Endosulfan I		195	339, 341
Endosulfan II		337	339, 341
Endosulfan sulfate		272	387, 422

TABLE IX. (cont)

Compound	Retention time (min)	Primary ion	Secondary ion(s)
Endrin		263	82, 81
Endrin aldehyde		67	345, 250
Endrin ketone		317	67, 319
2-Fluorobiphenyl (surr.)		172	171
2-Fluorophenol (surr.)		112	64
Heptachlor		100	272, 274
Heptachlor epoxide		353	355, 351
Nitrobenzene-d_5 (surr.)		82	128, 54
N-Nitrosodimethylamine		42	74, 44
Phenol-d_6 (surr.)		99	42, 71
Terphenyl-d_{14} (surr.)		244	122, 212
2,4,6-Tribromophenol (surr.)		330	332, 141
Toxaphene		159	231, 233

I.S. = internal standard
surr. = surrogate
[a]Estimated retention times
[b]Substitute for the nonspecific mixture, tricresyl phosphate

TABLE X.
LIMIT OF QUANTITATION FOR HAZARDOUS SUBSTANCE LIST OF SEMIVOLATILE ORGANIC ANALYTES IN WATER

Compound	CAS number	LOQ µg/L
Acenaphthene	83-32-9	10
Acenaphthylene	208-96-2	10
Anthracene	120-12-7	10
Aniline	62-53-3	10 *
Azobenzene	3-33-3	10
Benzidine	92-87-5	10 *,a
Benz(a)anthracene	56-55-3	10
Benzo(b)fluoranthene	205-99-2	10
Benzo(k)fluoranthene	207-88-9	10
Benzoic Acid	65-85-0	10 *,c
Benzo(g,h,i)perylene	191-24-2	10
Benzo(a)pyrene	50-32-8	10
Benzyl alcohol	0-51-6	10
Bis(2-chloroethoxy)methane	111-91-1	10
Bis(2-chloroethyl) ether	111-44-4	10
Bis(2-chloroisopropyl) ether	8-60-1	10
4-Bromophenyl phenyl ether	1-55-3	10
Butyl benzyl phthalate	85-68-7	10 *
4-Chloroaniline	6-47-8	10 *,c
4-Chloro-3-methylphenol	59-50-7	10
2-Chloroanaphthalene	91-58-7	10
2-Chlorophenol	95-57-8	10
4-Chlorophenyl phenyl ether	7005-72-3	10
Chrysene	218-01-9	10
Dibenz(a,h)anthracene	53-70-3	10
Dibenzofuran	132-64-9	10

TABLE X. (cont)		
Compound	CAS number	LOQ µg/L
Di-n-butyl phthalate	84-74-2	10 *
1,2-Dichlorobenzene	95-50-1	10
1,3-Dichlorobenzene	541-73-1	10
1,4-Dichlorobenzene	6-46-7	10
3,3'-Dichlorobenzidine	91-94-1	10 *
2,4-Dichlorophenol	120-83-2	10
Diethyl phthalate	84-66-2	10 *
2,4-Dimethylphenol	5-67-9	10 *,c
Dimethyl phthalate	131-11-3	10 *
4,6-Dinitro-2-methylphenol	534-52-1	10
2,4-Dinitrophenol	51-28-5	10 *,c
2,4-Dinitrotoluene	121-14-2	10
2,6-Dinitrotoluene	606-20-2	10
Di-n-octyl phthalate	117-84-0	10
Bis(2-ethylhexyl) phthalate	117-81-7	10
Fluoranthene	206-44-0	10
Fluorene	86-73-7	10
Hexachlorobenzene	118-74-1	10
Hexachlorobutadiene	87-68-3	10
Hexachlorocyclopentadiene	77-47-4	10 *,d
Hexachloroethane	67-72-1	10
Indeno(1,2,3-cd)pyrene	193-39-5	10
Isophorone	78-59-1	10
2-Methylnaphthalene	91-57-6	10
2-Methylphenol	95-48-7	10 *,c
4-Methylphenol	6-44-5	10 *,c

TABLE X. (cont)

Compound	CAS number	LOQ µg/L
Naphthalene	91-20-3	10
2-Nitroaniline	88-74-4	10
3-Nitroaniline	99-09-2	10 *,c
4-Nitroaniline	0-01-6	10 *,c
Nitrobenzene	98-95-3	10
2-Nitrophenol	88-75-5	10
4-Nitrophenol	0-02-7	10 *,c
N-Nitrosodimethylamine	62-75-9	10 *,c
N-Nitrosodiphenylamine	86-30-6	10
N-Nitroso-di-n-propylamine	621-64-7	10 *
Pentachlorophenol	87-86-5	10 *,c
Phenanthrene	85-01-8	10
Phenol	8-95-2	10
Pyrene	129-00-0	10
1,2,4-Trichlorobenzene	120-82-1	10
2,4,5-Trichlorophenol	95-95-4	10
2,4,6-Trichlorophenol	88-06-2	10

* The limit of quantitation has not been verified for these analytes based upon a Method Detection Limit study. All other analytes averaged better than 70% recovery based upon seven repetitions. The amount of each analyte spiked was 330 µg into 1.0 L.

a Exhibits nonreproducible chromatography and oxidative loss during concentration.

c These analytes are subject to erratic chromatographic performance and/or thermal decomposition in the gas chromatograph inlet.

d Subject to thermal decomposition in the chromatographic inlet, chemical reaction with acetone in solution, and photochemical decomposition.

Limits of Quantitation (LOQ) will be two times greater for soil/sediment matrices which have been GPC cleaned.

TABLE XI.
APPENDIX 9 TARGET COMPOUND LIST OF SEMIVOLATILE ORGANIC ANALYTES IN WATER-LIMIT OF QUANTITATION

Compound	CAS number	LOQ µg/L
Acenaphthene	83-32-9	10
Acenaphthylene	208-96-2	10
Acetophenone	98-86-2	ND
Anthracene	120-12-7	10
Aniline	62-53-3	10 *
Aramite	140-57-8	ND
Azobenzene	3-33-3	10
Benzidine	92-87-5	10 *,a
Benz(a)anthracene	56-55-3	10
Benzo(b)fluoranthene	205-99-2	10
Benzo(k)fluoranthene	207-88-9	10
Benzoic Acid	65-85-0	10 *,c
Benzo(g,h,i)perylene	191-24-2	10
Benzo(a)pyrene	50-32-8	10
Benzyl alcohol	0-51-6	10
Bis(2-chloroethoxy)methane	111-91-1	10
Bis(2-chloroethyl) ether	111-44-4	10
Bis(2-chloroisopropyl) ether	108-60-1	10
4-Bromophenyl phenyl ether	101-55-3	10
Butyl benzyl phthalate	85-68-7	10 *
4-Chloroaniline	106-47-8	10 *,c
Chlorobenzilate	510-15-6	ND
4-Chloro-3-methylphenol	59-50-7	10
2-Chloroanaphthalene	91-58-7	10
2-Chlorophenol	95-57-8	10
4-Chlorophenyl phenyl ether	7005-72-3	10

TABLE XI. (cont)		
Compound	CAS number	LOQ µg/L
Chrysene	218-01-9	10
Diallate	2303-16-4	ND
Dibenz(a,h)anthracene	53-70-3	10
Dibenzofuran	132-64-9	10
Di-n-butyl phthalate	84-74-2	10 *
1,2-Dichlorobenzene	95-50-1	10
1,3-Dichlorobenzene	541-73-1	10
1,4-Dichlorobenzene	6-46-7	10
3,3'-Dichlorobenzidine	91-94-1	10 *
2,4-Dichlorophenol	120-83-2	10
Diethyl phthalate	84-66-2	10 *
Dimethoate	60-51-5	ND
7,12-Dimethylbenz(a)-anthracene	57-97-6	ND
2,4-Dimethylphenol	5-67-9	10 *,c
Dimethyl phthalate	131-11-3	10 *
4,6-Dinitro-2-methylphenol	534-52-1	10
2,4-Dinitrophenol	51-28-5	10 *,c
2,4-Dinitrotoluene	121-14-2	10
2,6-Dinitrotoluene	606-20-2	10
Di-n-octyl phthalate	117-84-0	10
Diphenylamine	122-39-4	ND
Dinoseb (DNBP)	88-85-7	ND
Disulfoton	298-04-4	ND
Bis(2-ethylhexyl) phthalate	117-81-7	10
Ethyl methacrylate	97-63-2	ND
Ethyl methanesulfonate	62-50-0	ND

TABLE XI. (cont)

Compound	CAS number	LOQ µg/L
Famphur	52-85-7	ND
Fluoranthene	206-44-0	10
Fluorene	86-73-7	10
Hexachlorobenzene	118-74-1	10
Hexachlorobutadiene	87-68-3	10
Hexachlorocyclopentadiene	77-47-4	10 *,d
Hexachloroethane	67-72-1	10
Hexachlorophene	70-30-4	ND
Hexachloropropene	1888-71-7	ND
Indeno(1,2,3-cd)pyrene	193-39-5	10
Isodrin	465-73-6	ND
Isosafrole	120-58-1	ND
Isophorone	78-59-1	10
Kepone	143-50-0	ND
3-Methylcholanthrene	56-49-5	ND
2-Methylnaphthalene	91-57-6	10
2-Methylphenol	95-48-7	10 *,c
4-Methylphenol	106-44-5	10 *,c
Methapyrilene hydrochloride	91-80-5	ND
Methyl methacrylate	80-62-6	ND
Methyl methanesulfonate	66-27-3	ND
Methyl Parathion	296-00-0	ND
Naphthalene	91-20-3	10
2-Nitroaniline	88-74-4	10
3-Nitroaniline	99-09-2	10 *,c
4-Nitroaniline	0-01-6	10 *,c
Nitrobenzene	98-95-3	10
2-Nitrophenol	88-75-5	10

TABLE XI. (cont)

Compound	CAS number	LOQ µg/L
4-Nitrophenol	100-02-7	10 *,c
4-Nitroquinoline-1-oxide	56-57-5	ND
5-Nitro-2-methylaniline	99-55-8	ND
N-Nitrosodiethylamine	55-18-5	ND
N-Nitrosomethylethylamine	10595-95-6	ND
N-Nitroso-di-n-butylamine	924-16-3	ND
N-Nitrosodimethylamine	62-75-9	10 *,c
N-Nitrosodiphenylamine	86-30-6	10
N-Nitroso-di-n-propylamine	621-64-7	10 *
o-Toluidine	95-53-4	ND
Parathion	56-38-2	ND
Pentachloroethane	76-01-7	ND
Pentachloronitrobenzene	82-68-8	ND
Pentachlorophenol	87-86-5	10 *,c
Phenacetin	62-44-2	ND
Phenanthrene	85-01-8	10
Phenol	8-95-2	10
Phorate	298-02-2	ND
2-Picoline	109-06-8	ND
Pronamide	23950-58-5	ND
Pyridine	110-86-1	ND
Pyrene	129-00-0	10
Safrole	94-59-7	ND
2,3,4,6-Tetrachlorophenol	58-90-2	ND
1,2,4-Trichlorobenzene	120-82-1	10
2,4,5-Trichlorophenol	95-95-4	10
O,O,O-Triethyl phosphorate	126-68-1	ND

TABLE XI. (cont)

Compound	CAS number	LOQ µg/L
2,4,6-Trichlorophenol	88-06-2	10
sym-Trinitrobenzene	99-35-4	ND
Tetraethyl dithiophosphate	3689-24-5	ND

* The limit of quantitation has not been verified for these analytes based upon a Method Detection Limit study. All other analytes averaged better than 70% recovery based upon seven repetitions. The amount of each analyte spiked was 330 µg into 1.0 L.

a Exhibits nonreproducible chromatography and oxidative loss during concentration.

c These analytes are subject to erratic chromatographic performance and/or thermal decomposition in the gas chromatograph inlet.

d Subject to thermal decomposition in the chromatographic inlet, chemical reaction with acetone in solution, and photochemical decomposition.

ND not determined for these analytes.

TABLE XII
PRACTICAL QUANTITATION LIMITS (PQL) FOR
SEMIVOLATILE ORGANICS

Compound	Ground water µg/L	Soil/Solid µg/kg
Acenaphthene	10	660
Acenaphthylene	10	660
Acetophenone	10	ND
2-Acetylaminofluorene	20	ND
1-Acetyl-2-thiourea	1000	ND
2-Aminoanthraquinone	20	ND
Aminoazobenzene	10	ND
4-Aminobiphenyl	20	ND
Anilazine	100	ND
O-Anisidine	10	ND
Anthracene	10	660
Aramite	20	ND
Azinphos-methyl	100	ND
Barban	200	ND
Benz(a)anthracene	10	660
Benzo(b)fluoranthene	10	660
Benzo(k)fluoranthene	10	660
Benzoic Acid	50	3300
Benzo(g,h,i)perylene	10	660
Benzo(a)pyrene	10	660
p-Benzoquinone	10	ND
Benzyl alcohol	20	1300
Bis(2-chloroethoxy)methane	10	660
Bis(2-chloroethyl) ether	10	660
Bis(2-chloroisopropyl) ether	10	660
4-Bromophenyl phenyl ether	10	660

TABLE XII (cont)

Compound	Ground water µg/L	Soil/Solid µg/kg
Bromoxynil	10	ND
Butyl benzyl phthalate	10	660
Captafol	20	ND
Captan	50	ND
Carbaryl	10	ND
Carbofuran	10	ND
Carbophenothion	10	ND
Chlorofenvinphos	20	ND
4-Chloroaniline	20	1300
Chlorobenzilate	10	ND
5-Chloro-2-methylaniline	10	ND
4-Chloro-3-methylphenol	20	1300
3-(Chloromethyl)pyridine hydrochloride	100	ND
2-Chloroanaphthalene	10	660
2-Chlorophenol	10	660
4-Chlorophenyl phenyl ether	10	660
Chrysene	10	660
Coumaphos	40	ND
p-Cresidine	10	ND
Crotoxyphos	20	ND
2-Cyclohexyl-4,6-dinitrophenol	100	ND
Demeton-o	10	ND
Demeton-s	10	ND
Diallate	10	ND
2,4-Diaminotoluene	20	ND
Dibenz(a,j)acridine	10	ND
Dibenz(a,h)anthracene	10	660

TABLE XII (cont)

Compound	Ground water µg/L	Soil/Solid µg/k
Dibenzofuran	10	660
Dibenzo(a,e)pyrene	10	ND
Di-n-butyl phthalate	10	ND
Dichlone	NA	ND
1,2-Dichlorobenzene	10	660
1,3-Dichlorobenzene	10	660
1,4-Dichlorobenzene	10	660
3,3'-Dichlorobenzidine	20	1330
2,4-Dichlorophenol	10	660
2,6-Dichlorophenol	10	ND
Dichlorovos	10	ND
Dichlorophos	10	ND
Diethyl phthalate	10	660
Diethylstilbestrol	20	ND
Diethyl sulfate	100	ND
Dimethoate	20	ND
3,3'-Dimethoxybenzidine	100	ND
Dimethylaminoazobenzene	10	ND
7,12-Dimethylbenz(a)anthracene	10	ND
3,3'-Dimethylbenzidine	10	ND
2,4-Dimethylphenol	10	660
Dimethyl phthalate	10	660
1,2-Dinitrobenzene	40	ND
1,3-Dinitrobenzene	20	ND
1,4-Dinitrobenzene	40	ND
4,6-Dinitro-2-methylphenol	50	3300
2,4-Dinitrophenol	50	3300

TABLE XII (cont)

Compound	Ground water µg/L	Soil/Solid µg/kg
2,4-Dinitrotoluene	10	660
2,6-Dinitrotoluene	10	660
Dinocap	100	ND
Dinoseb	20	ND
5,5-Diphenylhydantoin	20	ND
Di-n-octyl phthalate	10	660
Disulfoton	10	ND
EPN	10	ND
Ethion	10	ND
Ethyl carbamate	50	ND
Bis(2-ethylhexyl) phthalate	10	660
Ethyl methanesulfonate	20	ND
Famphur	20	ND
Fensulfothion	40	ND
Fenthion	10	ND
Fluchloralin	20	ND
Fluoranthene	10	660
Fluorene	10	660
Hexachlorobenzene	10	660
Hexachlorobutadiene	10	660
Hexachlorocyclopentadiene	10	660
Hexachloroethane	10	660
Hexachlorophene	50	ND
Hexachloropropene	10	ND
Hexamethyl phosphoramide	20	ND
Hydroquinone	ND	ND
Indeno(1,2,3-cd)pyrene	10	660
Isodrin	20	ND

TABLE XII (cont)		
Compound	Ground water µg/L	Soil/Solid µg/kg
Isophorone	10	660
Isosafrole	10	ND
Kepone	20	ND
Leptophos	10	ND
Malathion	50	ND
Maleic anhydride	NA	ND
Mestranol	20	ND
Methapyriline	100	ND
Methoxychlor	10	ND
3-Methylcholanthrene	10	ND
4,4'-Methylenebis-(2-chloroaniline)	NA	ND
Methyl methanesulfonate	10	ND
2-Methylnaphthalene	10	660
Methyl Parathion	10	ND
2-Methylphenol	10	660
3-Methylphenol	10	ND
4-Methylphenol	10	660
Mevinphos	10	ND
Mexacarbate	20	ND
Mirex	10	ND
Monocrotophos	40	ND
Naled	20	ND
Naphthalene	10	660
1,4-Naphthoquinone	10	ND
1-Naphthylamine	10	ND
2-Naphthylamine	10	ND
Nicotine	20	ND

TABLE XII (cont)

Compound	Ground water µg/L	Soil/Solid µg/kg
5-Nitroacenaphthene	10	ND
2-Nitroaniline	50	3300
3-Nitroaniline	50	3300
4-Nitroaniline	20	ND
5-Nitro-2-methoxyaniline	10	ND
Nitrobenzene	10	660
4-Nitrobiphenyl	10	ND
Nitrofen	20	ND
2-Nitrophenol	10	660
4-Nitrophenol	50	3300
5-Nitro-2-methylaniline	10	ND
4-Nitroquinoline-1-oxide	40	ND
N-Nitrosodibutylamine	10	ND
N-Nitrosodiethylamine	20	ND
N-Nitrosodiphenylamine	10	660
N-Nitroso-di-n-propylamine	10	660
N-Nitrosopiperidine	20	ND
N-Nitrosopyrrolidine	40	ND
Octamethyl pyrophosphoramide	200	ND
4,4'-Oxydianiline	20	ND
Parathion	10	ND
Pentachlorobenzene	10	ND
Pentachloronitrobenzene	20	ND
Pentachlorophenol	50	3300
Phenacetin	20	ND
Phenanthrene	10	660
Phenobarbital	10	ND
Phenol	10	660

TABLE XII (cont)

Compound	Ground water µg/L	Soil/Solid µg/kg
1,4-Phenylenediamine	10	ND
Phorate	10	ND
Phosalone	100	ND
Phosmet	40	ND
Phosphamidon	100	ND
Phthalic anhydride	100	ND
2-Picoline	ND	ND
Piperonyl sulfoxide	100	ND
Pronamide	10	ND
Propylthiouracil	100	ND
Pyrene	10	660
Pyridine	ND	ND
Resorcinol	100	ND
Safrole	10	ND
Strychnine	40	ND
Sulfallate	10	ND
Terbufos	20	ND
1,2,4,5-Tetrachlorobenzene	10	ND
2,3,4,6-Tetrachlorophenol	10	ND
Tetrachlorvinphos	20	ND
Tetraethyl pyrophosphate	40	ND
Thionazine	20	ND
Thiophenol (benzenethiol)	20	ND
Toluene diisocyanate	100	ND
o-Toluidine	10	ND
1,2,4-Trichlorobenzene	10	660
2,4,5-Trichlorophenol	10	660
2,4,6-Trichlorophenol	10	660

TABLE XII (cont)

Compound	Ground water µg/L	Soil/Solid µg/kg
Trifluralin	10	ND
2,4,5-Trimethylaniline	10	ND
Trimethyl phosphate	10	ND
1,3,5-Trinitrobenzene	10	ND
Tris(2,3-dibromopropyl) phosphate	200	ND
Tri-p-tolyl phosphate (h)	10	ND
O,O,O-Triethylphosphorothioate	NT	ND

a. Soil/sediment PQLs are based upon a 30.0 g sample aliquot, wet weight, and GPC cleanup. When concentrations are reported on a dry weight basis the PQL will be higher.
b. The values in this table are for guidance only and may not always be achievable. Analyte recoveries are highly matrix dependent.
c. ND = Not determined
d. NA = Not applicable

VOLATILE ORGANIC COMPOUNDS IN SOIL AND SEDIMENT: CAPILLARY COLUMN TECHNIQUE — GC/MS (EPA SW846 METHOD 8260)

Analyte: Volatile organic compounds	**Method No.:** EO720
Matrix: Soil or sediment	**Procedure:** Purge/trap GC/MS, capillary column
Effective Date: 02/01/90	**Author:** Laura Kelly Matthew Monagle

SAFETY NOTE: Before beginning this procedure, read all of the Material Safety Data Sheets for the chemicals listed in Sec. 6. Read Sec. 4.3. of the EM-9 Safety Manual for information on personal protective clothing and equipment. Read Sec. 11 of this procedure and Source Materials 12.3 and 12.4 for proper waste disposal practices.

1. Principle of Method

1.1. Volatile organic compounds are purged from the sample onto a sorbent material. These analytes are then desorbed into a gas chromatograph (GC). The column is temperature-programmed and analytes are separated and detected with a mass spectrometer (MS).

1.2. Qualitative identification is performed by analyzing standards under the same conditions used for samples and comparing resultant mass spectra and GC retention times. Each identified component is quantified by relating the MS response for an appropriately selected ion produced by that compound to the MS response for another ion produced by an internal standard.

2. Analytes and Limit of Quantitation

Internal Standards	Surrogates
Pentafluorobenzene	1,2-Dichloroethane-d_4
1,4-Difluorobenzene	Toluene-d_8
1,4-Difluorobenzene-d_4	4-Bromofluorobenzene
Chlorobenzene-d_5	

2.1. Table I is a list of volatile organic compounds and their reporting limits of quantitative (LOQs). (Tables I-IV are found at the end of this procedure.)

2.2 The reporting limit of quantitation for the target VOCs is 5 μg/kg except for the following compounds.

Compound	µg/kg
Chloromethane	20.0
Vinyl chloride	20.0
Bromomethane	20.0
Chloroethane	20.0
Acetone	20.0
Acrolein	200.0
Acrylonitrile	200.0
2-Chloroethyl vinyl ether	200.0
Vinyl acetate	100.0
2-Butanone	20.0
4-Methyl-2-pentanone	20.0
2-Hexanone	20.0
1,2-Dibromo-3-chloropropane	100.0

Saturation of ions used for quantitation can occur at a concentration above 200 µg/kg. If saturation occurs the sample must be diluted and reanalyzed.

2.3. Table II lists all the volatile organic compounds and their characteristic masses. The volatile internal standards with the corresponding analytes are listed in Table III. Fig. 1. is a chromatogram with all volatile organic compounds, surrogates, and internal standards.

3. Interferences

3.1. Impurities in the purge gas and solvent vapors in the laboratory can contaminate samples. The analytical system must be demonstrated to be free from contamination under the condition of the analysis by running laboratory reagent blanks (i.e., method blanks). The use of non-TFE tubing, non-TFE thread sealants, or flow controllers with rubber components in the purging device must be avoided.

3.2. Samples can be contaminated by diffusion of volatile organics (particularly fluorocarbons and methylene chloride) through the septum seal into the sample during storage and handling. A trip blank, prepared from reagent water and carried through the holding period and the analysis protocol, serves as a check on such contamination. One trip blank per request group should be analyzed.

3.3. Contamination by carryover can occur whenever high-level and low-level samples are sequentially analyzed. Whenever an unusually concentrated sample is encountered, all following samples must be reanalyzed if carryover is suspected, or a method blank should follow until the contamination has been eliminated.

3.4. The volatile analysis laboratory should be completely free of solvents on the volatile organic component list.

4. Collection and Storage of Samples

4.1. Soil samples are collected in 40-mL screw-cap VOA vials with Teflon-lined silicone septa. The vials and septa should be washed with soap and water, rinsed with distilled deionized water, placed in an oven, and dried at 70°C for approximately 1 h.

4.2. VOA vials for samples with solid or semisolid (sludges) matrices should be filled as completely as possible. The vials should be tapped lightly as they are filled to try to eliminate as much free air space as possible. Two VOA vials should be filled at each sample location.

4.3. All sampling vials must be refrigerated between 0 and 4°C.

4.4. The holding time for soil samples is 14 days from the date of collection.

5. Apparatus

5.1. Purge and trap configuration.

5.1.1. The Precision Dynatech Autosampler is designed for in-situ purging of both soils and waters. The sample is loaded into glassware supplied with the autosampler. Internal standards and surrogates are added by the Precision Dynatech Autosampler. Purging takes place in the glass vessel.

5.1.2. The adsorbent trap must be at least 25 cm long and have an i.d. of at least 0.2667 cm. Starting from the inlet, the trap must contain the following amounts of absorbents: 1/3 2,6-diphenylene oxide polymer -60/80 mesh, chromatographic grade (Tenac GC or equivalent), 1/3 silica gel -35/60 mesh (Davison grade 15 or equivalent), and 1/3 coconut charcoal. Packed traps can be purchased through Supelco, Tekmar, or OI. If it is not necessary to analyze for dichlorodifluoromethane or other fluorocarbons of similar volatility, the charcoal can be eliminated and the polymer increased to fill 2/3 of the trap. Before initial use, the trap should be conditioned overnight at 180°C by backflushing with an inert gas flow of at least 20 mL/min. Before daily use, the trap should be conditioned for 10 min at 180°C with backflushing. Traps normally last 2-3 months when used daily. Some signs of deteriorating traps are: uncharacteristic recoveries of surrogate, especially toluene-d8, loss in response of internal standards during a 12 h shift, and a rise in the baseline during the early portion of the scan. The trap should be replaced if these characteristics are seen.

5.1.3. The desorber should be capable of rapidly heating (10°C/s) the trap to 180°C for desorption. The trap bakeout temperature should not exceed 220°C.

5.2. Gas chromatography/mass spectrometer/data system.

5.2.1. The GC must be temperature-programmable and should be equipped with adjustable differential flow controllers so that the column flow rate will be reproducible throughout desorption and temperature program operation. The GC is interfaced to the MS with a jet separator or is directly coupled.

5.2.2. Gas chromatographic column: Supelco VOCOL, 105-m x 0.53-mm x 3.0-μm film thickness or equivalent.

5.2.3. Mass spectrometer: Mass-spectral data are obtained with electron-impact ionization at a nominal electron energy of 70 eV. The mass spectrometer scans from 35 to 350 amu every 1 s or less and must produce a mass spectrum that meets all criteria in Step 7.1.1 when 50 ng of 4-bromofluorobenzene is introduced into the GC.

5.2.4. Data system: A computer system that allows the continuous acquisition and storage on machine-readable media of all mass spectra obtained throughout the duration of the chromatographic program must be interfaced to the mass spectrometer. The computer must have software that allows searching any GC/MS data file for ions of a specified mass and plotting such ion abundances versus time or scan number. This type of plot is defined as an extracted ion current profile (EICP). Software must also be available that allows integrating the abundances in any EICP between NIST and/or EPA mass-spectral libraries.

5.3. Microsyringes: 10-, 25-, 100-, and 500-μL, used for injecting the appropriate standards into the reagent water.

5.4. Syringes: 5- or 25-mL, for measuring the required aliquot of reagent water.

5.5. Balance: analytical, capable of accurately weighing 0.001 g.

5.6. Micro reaction vessels: 2- or 3-mL with Teflon-lined miniert valves, for the storage of stock or secondary standard solutions.

5.7. Disposable Pasteur pipettes: used for transferring stock or secondary standard solution from the volumetric flask to the micro reaction vessels.

6. Reagents/Standards

6.1. Methanol (CH_3OH). Pesticide quality or equivalent, demonstrated to be free of analytes. Must be stored separately from other solvents.

6.2. Reagent water. Must be purged with an inert gas for at least 30 min before use. Water must be free of interferents at the limit of quantitation (LOQ).

Alternatively, water may be purchased, preferably HPLC grade. Purity of water used must be verified by GC/MS analysis.

6.3. Stock solutions. All instructions for preparation of stock solutions and dilutions are located in the VOA standard preparation notebook located in Room 115, TA-59. See Table IV.

6.4. Instructions for storage of all standards, and expiration dates are found in the VOA standards preparation notebook. Expiration dates are to be strictly enforced.

6.5. Surrogate standards. The surrogates used are 1,2-dichloroethane-d_4, toluene-d_8, and 4-bromofluorobenzene.

6.6. Internal standards. The internal standards used are chlorobenzene-d_5, 1,4-difluorobenzene, 1,4-dichlorobenzene-d_4, and pentafluorobenzene.

6.7. 4-Bromofluorobenzene (BFB) standard. A standard solution containing 50 ng/μL of BFB in methanol is used for verifying the tune of the MS.

6.8. Calibration standards. Secondary calibration standards at a minimum of 5 concentration levels are prepared from calibration stock standards. The solutions are prepared in 5- or 25-mL aliquots of reagent water. The five concentration levels are 20, 50, 100, 150, and 200 μg/kg. A 5.0-μg/kg concentration level is optional.

6.9. Matrix spiking standards. Matrix spiking standard is prepared from volatile organic compounds which are representative of the compounds being investigated. The compounds used are 1,1-dichloroethene, benzene, trichloroethene, toluene, and chlorobenzene. A 10-μL aliquot of the matrix spiking standard is used for 5-mL samples (50-μL aliquot for 25-mL aqueous samples).

7. Calibration

7.1. Initial calibration.

7.1.1. Each GC/MS system must be hardware-tuned to meet the criteria listed below for a direct injection or purging of 50 ng of 4-bromofluorobenzene. Analyses can not proceed until criteria are met.

Mass	Relative Abundance Criteria
50	15 to 40% of mass 95
75	30 to 60% of mass 95
95	base peak, 100% relative abundance
96	5 to 9% of mass 95

173	<2% of mass 174
174	>50% of mass 95
175	5 to 9% of mass 174
176	≥95% but ≤101% of mass 174
177	5 to 9% of mass 176

7.1.2. Recommended GC/MS operating conditions

Electron energy:	70 V (nominal)
Mass range:	35-350 amu
Scan rate:	2 scan/s or less
Initial column temperature:	37°C
Initial column holding time:	4 min
Column temperature program:	4°C/min to 100°C, hold 1 min; 15°C/min to 230°C
Final column temperature:	230°C
Final column holding time:	0 min
Column bake out temperature:	230°C
Column bake out holding time:	0 min
Carrier gas:	Helium at ~15 mL/min

7.1.3. A set of at least 6 calibration standards containing the method analytes are required. The calibration standard concentrations used are 5, 20, 50, 100, 150, and 200 μg/mL. The calibration standard is prepared by adding the following volumes of the VOC 1-5 and HSL/VOC6 mixtures to 5.0 mL of reagent water. An optional technique is to prepare a calibration mix containing all the analytes and adding the volumes listed below to 5.0 mL of reagent water.

AMOUNT OF WORKING CALIBRATION STANDARD AND VOC #6 STANDARD ADDED

Std. conc.	5-mL aliquot	25-mL aliquot
	amount added (μL)	
20 μg/mL	4.0	20
50 μg/mL	10	50
100 μg/mL	20	100
150 μg/mL	30	150
200 μg/mL	40	200

7.1.4. The response factor, average response factor, and percent relative standard deviation for each compound will be calculated using the calibration program in the Hewlett Packard 1000 RTE system. A hard copy of the calibration report (produced by CBRPT) and copies of the quantitation reports with chromatograms are made and stored in a permanent calibration file associated with the instrument.

7.1.5. Five system performance check compounds (SPCCs) are checked for a minimum average response factor (RF): chloromethane, 1,1-dichloroethane, bromoform, 1,1,2,2-tetrachloroethane, and chlorobenzene. The minimum acceptable average RF for these compounds should be 0.300 (0.250 for bromoform). These compounds typically have RFs of 0.4-0.6 and are used to check overall instrument performance and/or degradation caused by contaminated lines or active sites in the system.

7.1.5.1. Chloromethane. This compound is easily lost as a result of a fast purge flow, or because the stock or working calibration standard (VOC #6 mix only) is degrading. The purge gas (helium) flow rate should be 25-40 mL/min on the purge-and-trap device. Optimize the flow rate to provide the best response for chloromethane and bromoform.

7.1.5.2. Bromoform. This compound will most likely to be purged very poorly if the purge flow is too slow. Cold spots and/or active sites in the transfer line may adversely affect response.

7.1.5.3. Tetrachloroethane and 1,1-dichloroethane. These compounds are degraded by contaminated transfer lines in purge-and-trap systems and/or active sites in trapping materials.

7.1.6. Continuing calibration check (CCC) compounds are used as a measure of the linearity of the response factors. The percent relative standard deviation (%RSD) is checked for the CCCs. These compounds are 1,1-dichloroethene, chloroform, 1,2-dichloropropane, toluene, ethylbenzene, and vinyl chloride. The maximum %RSD for these compounds is 30%. The %RSD for all analytes should be < 30%.

7.1.7. Once the initial calibration (containing the response factor, average response factor, and percent relative standard deviation for each analyte of the five different calibration standards) has been generated, the analyst can proceed with daily GC/MS calibration.

7.2. Continuing daily calibration.

7.2.1. Before samples are analyzed, inject or purge 50 ng of the 4-bromofluorobenzene (BFB) standard (1 μL of the 25-μg/mL

4-bromofluorobenzene solution for direct injection and 10 μL of the 25 μg/mL 4-bromofluorobenzene into 5 mL of reagent water for purging). The resultant mass spectra for the BFB must meet all the criteria given in Step 7.1.1. This procedure must be performed every 12 h of analysis. The 12-h sequence begins at the time at which BFB is injected into the GC/MS system.

7.2.2. The initial calibration curve for each compound must be checked and verified every 12 h before analyzing samples. This is accomplished by analyzing a 50-ng/mL continuing calibration standard and checking the SPCCs and CCCs.

7.2.3. The minimum response factor for the SPCCs must be 0.300 (0.250 for bromoform). Some possible problems are standard mixture degradation, contamination at the front end of the analytical column, and active sites in the column or chromatographic system.

7.2.4. The CCCs are used to check the validity of the initial calibration by calculating the percent difference between the average response factor from the initial calibration and the response factor from the current verification check standard. If the percent difference for any compound is 20%, the laboratory should consider this a warning limit. If the percent difference for each CCC is <25%, the initial calibration is assumed to be valid. If this criterion is not met (>25% difference) for any one CCC, corrective action must be taken. The percent difference for all analytes should be less than or equal to 25%. Corrective action can include but is not limited to, reanalysis of the verification check standard, cutting a portion of the column, or using a new working calibration standard. If a source of the problem cannot be determined after corrective action has been taken, a new five-point calibration (initial calibration) must be generated. See Step 7.1. Both SPCC and CCC criteria must be met before quantitative sample analysis begins.

8. Procedure

8.1. Low-level soil analysis.

8.1.1. BFB tuning criteria and continuing calibration criteria must be met before analysis of samples can begin.

8.1.2. Parameters.

Precision Autosampler	O I Sample Concentrator
Purge flow: 35 mL/min	Purge time: 8-10 min
Purge temp: 40°C	Desorb preheat: 20°C
Soil program for all samples	Desorb time: 2.00 min
Standard: Yes	Desorb temp: 180°

Line heat: 100
Sample heat: 40
Preheat: 30 sec.
Water volume: 5 mL
Pre-purge: 0
Purge time: 8.0 min
Flushes: 1
Soil stir: Yes
Desorb time: 2.0 min
Water trap Volume: 0

Trap bake time: 14.0 min
Bake temp: 215
Transfer line: 135
Valve temp: 125

8.1.3. A sample batch typically consists of a BFB, continuing calibration, reagent water blank, and samples up to the 12-h limit on BFB tune. Samples are set up as described in the following sections.

8.1.4. Assemble the bottom portion of the autosampler vial. Place 5 g of soil or sludge on top of the frit of the autosampler vial. Weigh the vial. Record the exact weight. Add a stirring bar and seal the vial. Alternatively, if the sample was collected in a preweighed autosampler vial, record weight and calculate weight. See Step 8.3 for instructions on percent moisture determinations. All data is to be recorded on the VOA benchsheet.

8.1.5. Place the sealed autosampler vial on the autosampler. The internal standard/purgeable surrogates are added automatically. Check the ISM syringe content before each sequence run (ISM/PSS). If the amount is low (<1 mL), refill according to the directions in the Precision Manual. The batch sequence can then be started.

8.1.6. The trapped materials are introduced to the GC column by rapidly heating the trap to 180°C while backflushing the trap with helium at 15 mL/min for 2 min.

8.1.7. To avoid contamination of the next sample, bake the trap at 215°C for 11 min. Return the trap to ambient temperature and analyze the next sample.

8.1.8. For each sample analyzed, including BFB and continuing calibrations, an entry must be made in the sample injection log associated with each instrument. This entry must be made within 24 h of data acquisition. This entry includes factors such as date and time sample was run, internal standard values, and surrogate recovery.

8.1.9. If the initial analysis of a sample shows a concentration of analytes that exceed the initial calibration range (higher than 200 μg/kg), the sample will need to be reanalyzed using an aliquot of <5 g but not <1 g. If compound saturation still occurs with a 1-g aliquot, a medium-level

analysis is necessary (see Section 8.2). Secondary-ion quantitation is allowed only when there are sample interferences with the primary ion. When a sample is analyzed that has saturated ions from a compound, the analysis must be followed by a blank water analysis. Sample analysis may not resume until a blank can be analyzed and found free of interferences. If this occurs during an automated run, reanalyze all following samples if carryover from the saturated compound is suspected.

8.1.10. If one or more of the surrogate spiking compounds are not within the control limits and/or the internal standard areas are +100%/-50% of the continuing calibration in a sample, that sample should be reanalyzed. See Step 9.2 for details.

8.1.11. If a trip, field, or holding blank is submitted with the soil samples, the sample should be prepared and analyzed as a blank (see Step 8.1.3). The sample is analyzed with the associated soil samples using the same initial and continuing calibration. The surrogate recoveries for the trip, field, or holding blank should meet the control limits set for soil analysis.

8.2. Medium-level soil analysis.

8.2.1. The medium-level soil method is based on extracting the soil or sediment sample with methanol. An aliquot of the methanol extract is added to reagent water containing the surrogate and internal standard. This method is used when saturation occurs or would occur during analysis of a 1-g sample.

NOTE: Steps 8.2.2 and 8.2.3 must be performed rapidly to avoid loss of volatile organics.

8.2.2. To avoid the loss of possible volatile compounds, gently mix the contents of the sample container including any supernatant liquids with a narrow metal spatula. Using a top-loading balance, weigh 5 g of sample (wet weight) into a tared 40-mL vial. Record the actual weight to the nearest 0.1 g.

8.2.3. Quickly add 5.0 mL of methanol to the vial. Cap and shake for 2 min.

8.2.4. Using a disposable Pasteur pipette, transfer approximately 1 mL of the reagent methanol to a GC autosampler vial for use as the method blank. Before analysis, the extracts may be stored in the dark between 0 and 4°C up to 40 days from the extraction date.

8.2.5. Remove the plunger from a 5-mL syringe and fill the syringe to overflowing with reagent water. Replace the plunger and compress the water to vent trapped air. Adjust the volume to 4.9 mL. Pull the

plunger back to 5 mL to allow volume for the addition of sample. Add 100 μL of the internal standard mix. Add 100 μL of the appropriate methanol extract.

8.2.6. Inject the 5 mL sample into the Precision Autosampler vial. Analyze as directed in Section 8.1.

8.2.7 If the initial analysis of a sample shows a concentration of analytes that exceeds the initial calibration range (higher than 200 μg/kg), the sample will need to be diluted and reanalyzed. Secondary-ion quantitation is allowed only when there are sample interferences with the primary ion. When a sample is analyzed that has saturated ions from a compound, the analysis must be followed by a blank water analysis. Sample analysis may not resume until a blank can be analyzed and found free of interferences. If a primary-ion saturation occurs during an automated run, all following samples should be reanalyzed if carryover from the saturated compound is suspected.

8.2.11. For a matrix spike in the medium-level sediment or soil samples, add 10.0 μL of matrix spike solution to the 5-mL syringe containing the methanol extract.

8.3. Determine percent moisture on all samples that are not radioactive or biohazards or where an insufficient quantity of sample was submitted. If a hazard prevents this determination, document this and include in the data packet. Determine percent moisture as follows:

8.3.1. Weigh an empty aluminum weighing pan. Record weight.

8.3.2. Add approximately 5 g of sample and reweigh. Record weight.

8.3.3. Place in a drying oven at 80-100°C for at least 24 h. Cool and reweigh, recording dry weight.

8.3.4. Percent moisture is calculated by:

$$\frac{\text{wet weight} - \text{dry weight}}{\text{dry weight}} \times 100$$

9. Quality Control

9.1. A method blank consisting of reagent water is automatically spiked with ISM/PSS mix. A method blank is analyzed at the beginning of each instrument batch (all samples analyzed together within the same 12-h period). The method blank must be free of any target volatile organic components at or above the limit of quantitation (LOQ) with the exception of acetone, methylene chloride, 2-butanone and toluene. These compounds can be detected in the method blank up to 5 times their LOQ. The surrogate recoveries should be within the control limits listed in Step 9.2. Analysis should not proceed until these requirements are met.

9.2. The following surrogates are spiked into each sample and analyzed as a measure of analyte recovery: 1,2-dichloroethane-d_4, toluene-d_8, and 4-bromofluorobenzene. If one or more of the surrogate spiking compounds are not within the control limits, those samples should be reanalyzed. If the reanalysis demonstrates similar results and the surrogate recoveries in the associated method blank are within the control limits, the out-of-control situation could be attributed to matrix effect and the results from the initial analysis should be reported. If the reanalysis of the sample has surrogate recoveries and/or internal standard areas within the control limits, the out-of-control condition could be due to analyst error or to a degrading surrogate spiking mix. In this case the results from the reanalysis should be reported.

SURROGATE RECOVERY CONTROL LIMITS	
1,2-Dichloroethane-d_4	70-121%
Toluene-d_8	81-117%
4-Bromofluorobenzene	74-121%

9.3. A matrix spike, matrix spike duplicate, and matrix spike control are analyzed with every analytical batch and/or request group. Matrix spike and matrix spike duplicate samples also measure analyte recovery from a sample. One of the submitted samples is used as the matrix media. It is prepared as a normal sample and 10.0 μL of the matrix spike mix is added to the media before purging. A matrix spike control is analyzed by spiking 10.0 μL of matrix spike mix into 5 mL of reagent water. This matrix spike control sample is used in interpretation of matrix spike/matrix spike duplicate results and in distinguishing a genuine matrix effect from a bad stock solution.

9.4. "Blind" QC samples are received from the Quality Assurance section at a rate of 10% of the total samples analyzed. These samples are analyzed in exactly the same manner as submitted samples.

9.5. A duplicate of a submitted sample may be analyzed in order to measure precision of the environmental measurements. A duplicate is typically analyzed when a request group has >15 samples or when a request group does not have a sample used as a matrix spike and matrix spike duplicate.

9.6. Samples certified by the American Association for Laboratory Accreditation (A2LA) should be analyzed once per month.

9.7. Laboratory performance evaluation samples provided by the US Environmental Protection Agency Water Pollution and Drinking Water are each analyzed twice a year as a part of the quality control program.

10. Data Interpretation

10.1. Qualitative analysis.

10.1.1. An analyte is identified by comparison of the sample mass spectrum with the mass spectrum of the compound from a standard (standard reference spectrum). The standard reference spectrum is obtained through analysis of a calibration standard. Two criteria must be satisfied to verify identification: (1) elution of the sample component at the same GC relative retention time (RRT) as that component in the daily standard; and (2) correspondence of the mass spectra of the sample component and the standard component.

10.1.1.1. The sample component RRT must agree within ±0.06 units of the RRT of the standard component in the daily calibration. If coelution of interfering components prohibits accurate assignment of the sample component RRT from the total ion chromatogram, the RRT from the total ion chromatogram, the RTT should be assigned by using extracted ion current profiles (EICPs) for ions unique to the component of interest.

10.1.1.2. All ions present in the standard mass spectrum at a relative intensity >10% of the primary ion must be present in the sample spectrum. The relative intensities of these ions must agree within ±20% between the standard and sample spectra.

EXAMPLE. For an ion with an abundance of 50% in the standard spectra, the corresponding sample ion abundance must be between 30% and 70%.

10.1.2. For samples containing components not associated with the calibration standards (non-target volatile organic components), a library search may be made for the purpose of tentative identification. Ten organic compounds of greatest concentration which are not identified as part of the calibration standard may be identified. Non-target volatile organic components with a response of <10% of the nearest internal standard are not required to be searched. Comparison of sample spectra with the spectra from the library searches will assign a tentative identification.

10.1.2.1. Relative intensities of major ions in the reference spectrum (ions with intensities >10% of the most abundant ion) should be present in the sample spectrum.

10.1.2.2. The relative intensities of the major ions should agree within ±20%.

EXAMPLE. For an ion with an abundance of 50% in the standard spectrum, the corresponding sample ion abundance must be between 30 and 70%.

10.1.2.3. Molecular ions present in the reference spectrum should be present in the sample spectrum.

10.1.2.4. Ions present in the sample spectrum but not in the reference spectrum should be reviewed for possible background contamination or presence of coeluting compounds.

10.1.2.5. Ions present in the reference spectrum but not in the sample spectrum should be reviewed for possible subtraction from the sample spectrum because of background contamination of coeluting peaks.

If the compound does not meet the identification criteria listed above, the compound shall be reported as unknown.

10.2. Quantitative analysis.

10.2.1. When a compound has been identified, the quantitation of that compound will be based on the integrated abundance from the EICP of the primary characteristic ion (see Table II). The compound will be quantitated using an internal standard technique. The internal standard used will be the one nearest the retention time of a given analyte.

10.2.1.2. The concentration of each identified analyte in the sample is calculated as follows:

<u>Low-level soil analysis</u>

$$\text{concentration } (\mu g/kg) = \frac{(Ax)\ (Is)}{(Ais)\ (RF)\ (W_s)\ (D)} ,$$

Medium-level soil analysis (used for highly contaminated samples).

$$\text{concentration } (\mu g/kg) = \frac{(Ax)\ (Is)\ (V_t)}{(Ais)\ (RF)\ (V_i)\ (W_s)\ (D)} ,$$

where Ax = area of characteristic ion for compound being measured,
Is = amount of internal standard injected (ng),
Ais = area of characteristic ion for the internal standard,
RF = response factor for compound being measured,
V_t = volume of total extract (μL),
V_i = volume of extract added for purging, (μL)
W_s = weight of sample extracted (g) or purged, and
D = $\frac{100 - \%\ moisture}{100}$.

10.2.1.3. The HP 1000 RTE system will automatically calculate the concentration (ng/kg) of the analyte detected when a report is generated.

10.2.2. Where applicable, an estimate of concentration for non-target volatile organic components in the sample should be made. The areas Ax and Ais (defined in Step 10.2.1.2) should be from the total ion chromatogram and the RF for the compound should be assumed to be 1. The concentration obtained should be reported indicating (1) that the value is an estimate and (2) which internal standard was used to determine concentration. The nearest internal standard free of interferences is used.

10.2.3. Results are reported without method blank correction. Method blanks will be reported as discrete samples.

11. Proper Waste Disposal Practices

11.1. General waste management.

11.1.1. Each analyst within the section shall be given Waste Generator training from EM-8 within 90 days of date of hire.

11.1.2. Wherever possible, the generation of waste shall be minimized through reduction, reuse or recycling. Wherever possible containers should be segregated to reflect the nature of the hazardous waste and the eventual waste-disposal methods. For example, chlorinated solvent wastes should be segregated from flammable, nonchlorinated solvents and >50-ppm PCB contaminated waste should be segregated from <50-ppm PCB contaminated waste. This is especially important in analysis areas where the waste generated is considered to be mixed waste.

11.1.3. Waste is categorized using a Waste Profile Form from EM-8. Upon completion of a Waste Profile Form, the waste is disposed of by completing a Waste Disposal Request Form from EM-7. Approximately 30 days is required for the disposal of waste after the completion of the listed forms.

11.2. Solid waste.

11.2.1. Solid hazardous waste, such as contaminated paper towels, pipettes, spent syringes, and glass vials, is accumulated in a covered plastic container lined with a plastic bag. The container is labeled with a hazardous waste label identifying the hazard, the type of material being stored (i.e., pipettes, paper towels, etc.), the accumulation start date, and the laboratory of origin.

11.2.2. The waste container is opened only for the time necessary to dispose of the waste.

11.3. Liquid waste.

11.3.1. Liquid wastes, such as spent samples and spent solvents that are not reusable, are accumulated in glass or steel containers appropriate for the type of sample being stored. For example, caustic materials should be stored in glass containers whereas spent solvents that are not to be recycled should be stored in metal containers.

11.3.2. All containers storing hazardous liquid materials must be secondarily contained. The container is labeled with a hazardous waste label identifying the hazard, the type of material being stored, the accumulation start date, and the laboratory of origin.

11.3.3. The waste container is opened only for the time necessary to dispose of the waste.

11.4. Unused samples.

11.4.1. Unused environmental samples are returned to the Sample Management section for eventual disposal.

12. Source Materials

12.1. "Test Methods for Evaluating Solid Waste, Physical/Chemical Methods," Laboratory Manual Vol. 1B, Method 8260, report no. SW-846 (November 1986).

12.2. "Statement of Work for Organics Analysis," USEPA Contract Laboratory Program (October 1986).

12.3. "Hazardous and Mixed Waste," Administrative Requirement 10-3, in *Environment, Safety, and Health Manual*, Los Alamos National Laboratory Manual, Chapter 1 (most recent edition).

12.4. "Low-Level Radioactive Solid Waste," Administrative Requirement 10-2, in *Environment, Safety, and Health Manual*, Los Alamos National Laboratory Manual, Chapter 1 (most recent edition).

TABLE I. VOLATILE ORGANIC COMPOUNDS

Analyte	CAS No.	LOQ µg/kg
Chloromethane	74-87-3	20
Vinyl Chloride	75-01-4	20
Bromomethane	74-83-9	20
Chloroethane	75-00-3	20
Acetone	67-64-1	20
Acrolein	107-02-8	200
Acrylonitrile	107-13-1	200
2-Chloroethyl vinyl ether	110-75-8	200
Dichlorodifluoromethane	75-71-8	10
Iodomethane	74-88-4	5.0
Trichlorotrifluoroethane	76-13-1	5.0
Trichlorofluoromethane	75-69-4	5.0
Methylene chloride	75-09-2	5.0
1,1-Dichloroethene	75-35-4	5.0
Carbon disulfide	75-15-0	5.0
trans-1,2-Dichloroethene	156-60-5	5.0
1,1-Dichloroethane	75-34-3	5.0
cis-1,2-Dichloroethene	156-59-2	5.0
Bromochloromethane	74-97-5	5.0
Chloroform	67-66-3	5.0
1,2-Dichloroethane	107-06-2	5.0
1,1-Dichloropropane	563-58-6	5.0
Vinyl acetate	108-05-4	10
2-Butanone	78-93-3	20
2,2-Dichloropropane	594-20-7	5.0
1,1,1-Trichloroethane	71-55-6	5.0
Carbon tetrachloride	56-23-5	5.0
Benzene	71-43-2	5.0

TABLE I. (cont)

Analyte	CAS No.	LOQ µg/kg
1,2-Dichloropropane	78-87-5	5.0
Trichloroethene	79-01-6	5.0
Dibromomethane	74-95-3	5.0
Bromodichloromethane	75-27-4	5.0
trans-1,3-Dichloropropene	1006-10-26	5.0
cis-1,3-Dichloropropene	1006-10-15	5.0
1,1,2-Trichloroethane	79-00-5	5.0
1,3-Dichloropropane	142-28-9	5.0
Chlorodibromomethane	124-48-1	5.0
4-Methyl-2-pentanone	10-81-01	20
Toluene	108-88-3	5.0
2-Hexanone	59-17-86	20
1,2-Dibromoethane	106-93-4	5.0
Tetrachloroethene	127-18-4	5.0
Chlorobenzene	108-90-7	5.0
1,1,1,2-Tetrachloroethane	630-20-6	5.0
Ethylbenzene	100-41-4	5.0
o,m,p-Xylene (mixed)	133-020-7	5.0
Styrene	100-42-5	5.0
Bromoform	75-25-2	5.0
1,1,2,2-Tetrachloroethane	79-34-5	5.0
1,2,3-Trichloropropane	96-18-4	5.0
Isopropylbenzene	98-82-8	5.0
Bromobenzene	108-86-1	5.0
n-Propylbenzene	103-65-1	5.0
2-Chlorotoluene	95-49-8	5.0
4-Chlorotoluene	106-43-4	5..

TABLE I. (cont)

Analyte	CAS No.	LOQ µg/kg
1,3,5-Trimethylbenzene	108-67-8	5.0
tert-Butylbenzene	98-06-6	5.0
1,2,4-Trimethylbenzene	95-63-6	5.0
sec-Butylbenzene	135-98-8	5.0
1,3-Dichlorobenzene	541-73-1	5.0
1,4-Dichlorobenzene	106-46-7	5.0
p-Isopropyltoluene	99-87-6	5.0
1,2-Dichlorobenzene	95-50-1	5.0
n-Butylbenzene	104-51-8	5.0
1,2-Dibromo-3-chloropropane	96-12-8	100
Hexachlorobutadiene	87683	5.0
Napthalene	91203	5.0
1,2,3-Trichlorobenzene	87616	5.0

TABLE II. CHARACTERISTIC MASSES (M/Z) FOR PURGEABLE ORGANIC COMPOUNDS

Analyte	Primary characteristic ion	Secondary characteristic ion(s)
Acetone	43	58
Acrylonitrile	53	52
Acrolein	57	56,55
Benzene	78	-
Bromobenzene	156	77,158
Bromochloromethane	128	49,130,51
Bromodichloromethane	83	85,127
Bromoform	173	171,175,254,250,252,256
Bromomethane	94	96
2-Butanone	43	72,57
n-Butylbenzene	91	92,134
sec-Butylbenzene	105	134
tert-Butylbenzene	119	91,134
Carbon tetrachloride	117	119,121
Chlorobenzene	112	77,114
Chloroethane	64	66
Chloroethyl vinyl ether	63	65,106
Chloroform	83	85
Chloromethane	50	52
2-Chlorotoluene	91	126
4-Chlorotoluene	91	126
1,2-Dibromo-3-chloropropane	75	155,157
Dibromochloromethane	129	127,206,208
1,2-Dibromoethane	107	109,188
Dibromoethane	93	95,174
1,2-Dichlorobenzene	146	111,148
1,3-Dichlorobenzene	146	111,148
1,4-Dichlorobenzene	146	111,148
Dichlorodifluoromethane	85	87
1,1-Dichloroethane	63	65,83,85,98,100
1,2-Dichloroethane	62	64,98,100
1,1-Dichloroethene	96	61,63,98
cis-1,2-Dichloroethene	96	61,98
trans-1,2-Dichloroethene	96	61,98
1,2-Dichloropropane	63	65,112,114

TABLE II. (cont)

Analyte	Primary characteristic ion	Secondary characteristic ion(s)
1,3-Dichloropropane	76	78
2,2-Dichloropropane	77	97
1,1-Dichloropropene	75	110,77
cis-1-3-Dichloropropene	75	77,39
trans-1,3-Dichloropropene	75	77,39
Ethylbenzene	91	106
2-Hexanone	43	57,58,85,100
Isopropylbenzene	105	120
p-Isopropyltoluene	119	134,91
Methylene chloride	84	86,49,51
4-Methyl-2-penatone	43	58,85,100
n-Propylbenzene	91	120
Styrene	104	78,103
1,1,1,2-Tetrachloroethane	131	133,119
1,1,2,2-Tetrachloroethane	83	131,85,133,166
Tetrachloroethene	166	164,168,129,131
Toluene	92	91
1,1,1-Trichloroethane	97	99,61,117,119
1,1,2-Trichloroethane	83	97,85,99,132,134
Trichloroethene	95	97,130,132
Trichlorofluoromethane	101	103
1,2,3-Trichloropropane	75	77
1,2,4-Trimethylbenzene	105	120
1,3,5-Trimethylbenzene	105	120
Vinyl chloride	62	64
o-Xylene	106	91
m,p-Xylene	106	91
INTERNAL STANDARDS/SURROGATES		
Pentafluorobenzene	168	
1,4-Difluorobenzene	114	63,88
Chlorobenzene-d_5	117	82,119
1,4-Dichlorobenzene	152	
4-Bromofluorobenzene	95	174,176
Toluene-d_8	98	70, 100
1,2-Dichloroethane-d_4	65	102

TABLE III. VOLATILE INTERNAL STANDARDS WITH CORRESPONDING ANALYTES ASSIGNED FOR QUANTITATION

Pentafluorobenzene	1,4-Difluorobenzene
Acetone	Bromodichloromethane
Acrolein	2-Chloroethyl vinyl ether
Acrylonitrile	Dibromomethane
Benzene	trans-1,3-Dichloropropene
Bromochloromethane	Toluene-d_8 [a]
Bromomethane	Trichloroethene
2-Butanone	
Carbon disulfide	
Carbon tetrachloride	**Chlorobenzene-d_5**
Chloroethane	
Chloroform	Bromoform
Chloromethane	Chlorodibromomethane
Dichlorodifluoromethane	Chlorobenzene
1,2-Dichloroethane	1,2-Dibromoethane
1,1-Dichloroethane	1,3-Dichloropropane
1,1-Dichloroethene	cis-1,3-Dichloropropene
1,2-Dichloroethane-d_4 [a]	Ethylbenzene
cis-1,2-Dichloroethene	2-Hexanone
trans-1,2-Dichloroethene	4-Methyl-2-pentanone
2,2-Dichloropropane	Styrene
1,1-Dichloropropene	Toluene
Iodomethane	1,1,2-Trichloroethane
Methylene chloride	Tetrachloroethane
1,1,1-Trichloroethane	1,1,1,2-Tetrachloroethane
Trichlorofluoromethane	o,m,p-Xylenes
Trichlorotrifluoroethane	
Vinyl acetate	
Vinyl chloride	**1,4-Dichlorobenzene-d_4**
	Bromobenzene
	n-Butylbenzene
	sec-Butylbenzene
	tert-Butylbenzene
	2-Chlorotoluene
	4-Chlorotoluene
	1,2-Dibromo-3-chloropropane

TABLE III. (cont)

1,4-Dichlorobenzene-d_4 (cont)

1,2-Dichlorobenzene
1,3-Dichlorobenzene
1,4-Dichlorobenzene
n-Propylbenzene
1,1,2,2-Tetrachloroethane
1,2,3-Trichloropropane
1,2,4-Trimethylbenzene
1,3,5-Trimethylbenzene
4-Bromofluorobenzene [a]

[a] Surrogate

TABLE IV. STOCK AND WORKING CALIBRATION SOLUTIONS

Chemical name/concentration	Final concentration Stock (μg/mL)	Working std. (μg/mL)
INTERNAL STANDARD MIX		
Pentafluorobenzene (1000 μg/mL)	50	NA
Chlorobenzene-d_5 (1000 μg/mL)	50	NA
1,4-Difluorobenzene (1000 μg/mL)	50	NA
1,4-Dichlorobenzene-d_4 (1000 μg/mL)	50	NA
CALIBRATION STANDARD MIX		
HSL Custom standard		
Acetone (1000 μg/mL)	100	25
Methyl ethyl ketone (1000 μg/mL)	100	25
Carbon disulfide (1000 μg/mL)	100	25
4-methyl-2-pentanone (1000 μg/mL)	100	25
Vinyl acetate (1000 μg/mL)	100	25
2-Chloroethyl vinyl ether (1000 μg/mL)	100	25
2-Hexanone (1000 μg/mL)	100	25
Acrolein (1000 μg/mL)	100	25
Acrylonitrile (1000 μg/mL)	100	25
Iodomethane (1000 μg/mL)	100	25
Freon 113 (1000 μg/mL)	100	25
Purgeable Surrogate Standard Mix - CLP		
Bromofluorobenzene (250 μg/mL)	50	NA
1,2-Dichloroethane-d_4 (250 μg/mL)	50	NA
Toluene-d_8 (250 μg/mL)	50	NA

TABLE IV. (cont)

Chemical name/concentration	Final concentration Stock (μg/mL)	Working std. (μg/mL)
Volatile Organic Compounds Mix #1		
sec-Butylbenzene (2000 μg/mL)	100	25
tert-Butylbenzene (2000 μg/mL)	100	25
Chlorobenzene (2000 μg/mL)	100	25
2-Chlorotoluene (2000 μg/mL)	100	25
4-Chlorotoluene (2000 μg/mL)	100	25
1,2-Dichlorobenzene (2000 μg/mL)	100	25
1,3-Dichlorobenzene (2000 μg/mL)	100	25
1,4-Dichlorobenzene (2000 μg/mL)	100	25
Isopropylbenzene (2000 μg/mL)	100	25
n-Propylbenzene (2000 μg/mL)	100	25
o-Xylene (2000 μg/mL)	100	25
p-Xylene (2000 μg/mL)	100	25
Volatile Organic Compounds Mix #2		
Benzene (2000 μg/mL)	100	25
Bromobenzene (2000 μg/mL)	100	25
n-Butylbenzene (2000 μg/mL)	100	25
Ethylbenzene (2000 μg/mL)	100	25
p-Isopropyltoluene (2000 μg/mL)	100	25
Naphthalene (2000 μg/mL)	100	25
Styrene (2000 μg/mL)	100	25
Toluene (2000 μg/mL)	100	25
1,2,3-Trichlorobenzene (2000 μg/mL)	100	25

TABLE IV. (cont)

Chemical name/concentration	Final concentration Stock (μg/mL)	Working std. (μg/mL)
Volatile Organic Compounds Mix #2 (cont)		
1,2,4-Trichlorobenzene (2000 μg/mL)	100	25
1,2,4-Trimethylbenzene (2000 μg/mL)	100	25
1,3,5-Trimethylbenzene (2000 μg/mL)	100	25
m-Xylene (2000 μg/mL)	100	25
Volatile Organic Compounds Mix #3		
1,2-Dibromo-3-chloropropane (2000 μg/mL)	100	25
1,2-Dibromoethane (2000 μg/mL)	100	25
1,2-Dichloroethane (2000 μg/mL)	100	25
1,2-Dichloropropane (2000 μg/mL)	100	25
1,3-Dichloropropane (2000 μg/mL)	100	25
1,1-Dichloropropene (2000 μg/mL)	100	25
1,3-Dichloropropene (4000 μg/mL) *	400	50
Hexachlorobutadiene (2000 μg/mL)	100	25
1,1,1,2-Tetrachloroethane (2000 μg/mL)	100	25
1,1,2,2-Tetrachloroethane (2000 μg/mL)	100	25
1,1,2-Trichloroethane (2000 μg/mL)	100	25
Trichloroethene (2000 μg/mL)	100	25
1,2,3-Trichloropropane (2000 μg/mL)	100	25

* Mixture of cis-1,3-dichloropropene and trans-1,3-dichloropropene, 2000 μg/mL each.

Volatile Organic Compounds Mix #4		
Bromochloromethane (2000 μg/mL)	100	25
Bromoform (2000 μg/mL)	100	25

TABLE IV. (cont)

Chemical name/concentration	Final concentration Stock (μg/mL)	Working std. (μg/mL)
Volatile Organic Compounds Mix #4 (cont)		
Carbon tetrachlororide (2000 μg/mL)	100	25
Chloroform (2000 μg/mL)	100	25
Dibromomethane (2000 μg/mL)	100	25
1,1-Dichloroethane (2000 μg/mL)	100	25
2,2-Dichloropropane (2000 μg/mL)	100	25
Tetrachloroethene (2000 μg/mL)	100	25
1,1,1-Trichloroethane (2000 μg/mL)	100	25
Volatile Organic Compounds Mix #5		
Bromodichloromethane (2000 μg/mL)	100	25
Dibromochloromethane (2000 μg/mL)	100	25
1,1-Dichloroethene (2000 μg/mL)	100	25
cis-1,2-Dichloroethene (2000 μg/mL)	100	25
trans-1,2-Dichloroethene (2000 μg/mL)	100	25
Methylene chloride (2000 μg/mL)	100	25
VOC #6 CALIBRATION STANDARD MIX		
Volatile Organic Compounds Mix #6		
Bromomethane (2000 μg/mL)	100	25
Chloromethane (2000 μg/mL)	100	25
Chloroethane (2000 μg/mL)	100	25
Dichlorodifluoromethane (2000 μg/mL)	100	25
Trichlorofluoromethane (2000 μg/mL)	100	25
Vinyl chloride (2000 μg/mL)	100	25

9.1.5.5. Evaporate the sample to dryness on medium heat.

9.1.5.6. Repeat Steps 9.1.5.4 and 9.1.5.5. Remove the sample from the hot plate and allow to cool.

9.1.5.7. Carefully wash down the cover and sides of the crucible with approximately 5 mL of concentrated HNO_3.

9.1.5.8. **CAUTIOUSLY** add 1-2 drops of 30% H_2O_2 to the crucible. When the vigorous reaction subsides, repeat the addition of H_2O_2 until the solution is clear or straw-colored.

9.1.5.9. Evaporate the solution in the crucible to approximately 1 mL.

9.1.5.10. Add 2 mL of saturated H_3BO_3 solution and heat to dissolve the sample.

9.1.5.11. Transfer the sample to a NEW 250-mL beaker using approximately 10 mL of concentrated HNO_3. Add 5 mL of concentrated HNO_3 to the platinum crucible. Repeat Steps 9.1.5.10 and 9.1.5.11 once.

9.1.5.12. Evaporate the solution to 1 mL. Add 20 mL of concentrated HCl and evaporate to 1 mL.

9.1.5.13. Add 20 mL of 6 M HCl and cover with plastic wrap and store until ready for the cation column.

9.2. Cation exchange column.

9.2.1. Evaporate the solution to dryness on low heat using either the sample as dissolved above or the americium fraction from the plutonium anion-exchange column (see Step 9.2.6.1 of the plutonium procedure Method No. ER160).

9.2.2. Add 20 mL of concentrated HCl to the dissolved sample residue, rinsing the sides of the beaker. Add sufficient Nd-147 tracer to yield ~ 40 000 counts/min on the well counter. Evaporate to dryness.

9.2.3. Add 20 mL of concentrated HCl to the sample and evaporate to 4 mL. While the sample is still warm, dilute to 50 mL with water.

9.2.4. Cation exchange column preparation.

9.2.4.1. Pack a small glass wool plug loosely into the tip of the ion exchange tube.

9.2.4.2. Transfer AG 50 x 4, 100-200 mesh resin slurry into the tube to a settled height of 17 cm. Wash the resin with two 20-mL aliquots of 0.5 M HCl.

9.2.5. Filter the sample onto the column.

9.2.6. Wash the beaker and column with 10 mL of 0.5 M HCl.

9.2.7. Wash the column with four 25-mL aliquots of 2.0 M HCl. Let each addition drain to the resin before adding the next aliquot. Discard the column washes.

9.2.8. Place a 100-mL beaker under the column and elute Am with three 25-mL aliquots of 4 M HCl.

9.2.9. Add 5 mL of concentrated HNO_3 to the solution and evaporate until just dry. **DO NOT BAKE.**

9.2.10. Add 2 mL of 6 M HNO_3 to the sample and cover with plastic wrap and store until ready for the anion column.

9.3. Alcohol-nitric acid anion exchange.

9.3.1. Add 3 mL of ethanol saturated with $NaNO_2$ to each 2 mL of the sample from Step 9.2.10. Mix and let stand for 1 h.

9.3.2. Anion exchange column preparation.

9.3.2.1. Pack a small glass wool plug loosely into the tip of the ion exchange tube.

9.3.2.2. Transfer MP-1, 100-200 mesh resin slurry into the tube to a settled height of 9 cm. Place a beaker under the column.

9.3.2.3. Wash the resin with two 20-mL aliquots of fresh 60% ethanol • 40% 6 M HNO_3.

9.3.2.4. Cover the column with a watch glass to minimize alcohol evaporation.

9.3.3. Pour the sample through the column.

9.3.4. Wash the beaker and column with 5 mL of 60% ethanol • 40% 6 M HNO_3. Collect these and the next two washes in the beaker.

9.3.5. Wash the column with two 20-mL aliquots of 75% methanol • 25% 6 M HNO_3.

9.3.6. Wash the column with two 20-mL aliquots of 60% methanol • 40% 6 M HNO_3.

9.3.7. Add 200 mL H_2O to the beaker containing the washes. Evaporate the solution on low heat to 50 mL. Transfer the solution to a plastic bottle. Count the solution to determine the Nd-147 separation. If the $^{241}Am/^{147}Nd$ separation is adequate, ~40%, discard the wash.

9.3.8. Place a new 100-mL beaker under the column. Elute americium from the column with two 20-mL aliquots of 60% methanol • 40% 2.5 M HNO_3.

9.3.9. Place the beaker on a hot plate and evaporate to 2 mL using low heat.

9.3.10. Add 2 mL of concentrated HCl to the beaker and evaporate to dryness. **DO NOT BAKE.**

9.3.11. Add 5 mL of concentrated HNO_3 to the beaker and evaporate to dryness. **DO NOT BAKE.**

9.3.12. Add 5 mL of 1 M HNO_3 to the beaker. Cover the beaker with plastic wrap until all samples are ready for filtration.

9.4. Filtration.

9.4.1. If the sample is dry, add 5 mL of 1 M HNO_3.

9.4.2. Prepare a mounting planchet.

9.4.2.1. Engrave the sample number on the back of the planchet.

9.4.2.2. Cut a piece of two-sided tape to fit each planchet.

9.4.3. Add 50 μL of Nd to each sample.

9.4.4. Prepare wash for filters.

9.4.4.1. For each sample fill a centrifuge tube with 5 mL of 1 M HNO_3 • 1 M HF and 50 μL of Nd.

9.4.4.2. Pour this solution through the filter before the sample.

9.4.5. Prepare filters.

9.4.5.1. Place a stainless-steel screen in the tower.

9.4.5.2. Place a millipore filter on top of the screen and float with a little distilled water to seat the filter. Turn on the vacuum to complete seating.

9.4.5.3. Attach the funnel, making sure that it is tight.

9.4.5.4. Add approximately 5 mL of distilled water to check the system for leaks.

9.4.5.5. Add wash for the filter from Step 9.4.4.

9.4.5.6. Add 250 μL of HF to the sample **JUST BEFORE** filtering. Process one sample at a time and filter immediately.

9.4.5.7. Wash the beaker and tower with 5 mL of 1 M HNO_3 • 1 M HF.

9.4.5.8. Rinse the tower with 1 mL of 1 M HNO_3 • 1 M HF.

9.4.5.9. Rinse the tower with two 1-mL aliquots of isopropyl alcohol. Turn off the vacuum after the alcohol has passed through the filter.

NOTE: Do not rinse the filter with water.

9.4.6. Mount the sample.

9.4.6.1. Remove the top layer of the two-sided tape.

9.4.6.2. Place the filter on the planchet and center it. Check the edges for seal.

9.4.6.3. Place the filter in an Anaslide filter holder to transport to the count room.

10. Operation of Equipment

10.1. Refer to the operating manual for the alpha spectrometer.

11. Calculations

11.1. Count samples for 80,000 s. Determine the counts for ^{241}Am and ^{243}Am by integrating the counts in 14 channels for each energy region.

11.2. Counting efficiency determinations for ^{241}Am and ^{243}Am.

11.2.1. Counting efficiencies for the tracer peak (E_t) and the analyte (E_x) peak will be calculated separately, using the same equations. The counting efficiency of the counter for a standard run is given by

$$E = \frac{\left(\frac{C_s}{T_s} - \overline{B}_s\right)}{A_s} ,$$

where E = counting efficiency in the peak of interest (counts per disintegration),
C_s = gross counts for the standard,
T_s = counting time for the standard (min),
$\overline{B}_s$ = average background count rate in the peak of interest, and
A_s = activity of the standard (dis/min).

11.2.2. The average counting efficiency is calculated from a running average of the last n values of individual E determinations.

$$\overline{E} = \frac{\sum_{i=1}^{n} E_i}{n} ,$$

where $\overline{E}$ = the running average of the counting efficiency,
E_i = the individual counting efficiencies from Step 11.2.1, and
n = the number of measurements used for calculation.

11.2.3. The standard deviation of $\overline{E}$ is

$$SD(\overline{E}) = \sqrt{\frac{\sum_{i=1}^{n} (E_i - \overline{E})^2 + SD(\overline{B}_s)^2}{(n-1)\, n\, \overline{E}^{\,2}} + \frac{(\sigma_{A_s})^2}{A_s^2}} ,$$

where $SD(\overline{E})$ = standard deviation of the average efficiency,
$\overline{E}$ = average efficiency (counts per disintegration) from Step 11.2.2,
E_i = individual efficiencies from Step 11.2.1,
$SD(\overline{B}_s)$ = standard deviation of the average background in the peak of interest,
n = number of values of E used,
σ_{A_s} = stated standard deviation associated with the known value of A_s, and
A_s = activity of the standard (dis/min).

11.2.4 The standard deviation of an individual E is

$$SD\ (E) = \sqrt{\frac{\frac{C_s}{T_s^2} + \frac{C_{bs}}{T_{bs}^2}}{\left(\frac{C_s}{T_s} - \frac{C_{bs}}{T_{bs}}\right)^2} + \frac{(\sigma_{A_s})^2}{A_s^2}} ,$$

where SD (E) = standard deviation of E (counts per disintegration),
C_s = gross counts for the standard,
T_s = counting time for the standard,
C_{bs} = gross counts for the background,
T_{bs} = counting time for the background,
σA_s = standard deviation of standard activity, and
A_s = activity of the standard.

11.3. Background determination. There will be different backgrounds for the tracer (B_t), and the analyte (B_x) peaks, but the calculations will be the same.

11.3.1. The background count rate is

$$B = \frac{C_b}{T_b} ,$$

where B = background count rate (counts/min),
C_b = gross counts for the background, and
T_b = counting time for the background (min).

11.3.2. The running average background count rate is calculated by

$$\overline{B} = \frac{\sum_{i=1}^{n} B}{n} ,$$

where $\overline{B}$ = average background count rate,
B = background count rate, and
n = numbers of values used.

11.3.3. The standard deviation for the average background count rate is calculated by

$$SD(\overline{B}) = \sqrt{\frac{\sum_{i=1}^{n} (B - \overline{B})^2}{(n - 1)}} ,$$

where $SD(\overline{B})$ = standard deviation of the running average of the background,
$\overline{B}$ = average background from Step 11.3.2,
B = individual background count rate, and
n = number of values used.

11.3.4. The minimum detectable activity for low-background instruments is determined by

$$MDA = \frac{(4.65 \times SD(B_x)) + 3}{K \times T_x} ,$$

where MDA = minimum detectable activity (dis/min),
$SD(B_x)$ = standard deviation of the background count rate (counts/min),
K = constant in sample units,
T_x = counting time,
4.65 = constant, and
3 = constant.

11.4 Tracer recovery.

11.4.1. The tracer recovery is calculated from

$$R_t = \frac{C_t}{T_t \times E_t \times A_t} ,$$

where R_t = fraction of the tracer recovered,
C_t = total counts in the tracer peak,
T_t = counting time for the tracer (min),
E_t = counting efficiency for the tracer peak, and
A_t = activity of tracer added to the sample (dis/min).

11.4.2 The standard deviation of the tracer recovery is

$$SD(R_t) = \sqrt{\frac{\frac{C_t}{T_t^2} + SD(B_t)^2}{\left(\frac{C_t}{T_t} - \overline{B}_t\right)^2} + \frac{\sigma_{A_t}^2}{A_t^2}} \quad ,$$

where $SD(R_t)$ = standard deviation of the tracer recovery,
C_t = counts in the tracer peak,
T_t = counting time (min),
$SD(B_t)$ = standard deviation of the background in the tracer peak,
$\overline{B}_t$ = the average background in the tracer peak,
σ_{A_t} = standard deviation of the known value of A_t, and
A_t = activity of the standard.

11.5. Sample activity.

11.5.1. The activity of the sample is given by

$$A_x = \frac{\left(\frac{C_x}{T_x} - \overline{B}_x\right)}{\overline{E}_x \times R_t} \quad ,$$

where A_x = sample activity (dis/min),
C_x = gross counts for the sample,
T_x = counting time for the sample (min),
$\overline{B}_x$ = average background count rate (counts/min),
$\overline{E}_x$ = average counting efficiency, and
R_t = tracer recovery fraction.

11.5.2. The standard deviation of the activity of the sample is given by

$$SD\ (A_x) = \sqrt{\frac{\frac{C_x}{Tx^2} + SD^2\ (\overline{B}_x)}{\left(\frac{C_x}{T_x} - \overline{B}_x\right)^2}}$$

where $SD\ (A_x)$ = standard deviation of sample activity (dpm),

C_x = gross counts for the sample,
T_x = sample counting time,
$SD^2(\overline{B}_x)$ = standard deviation for the average background, and
$\overline{B}_x$ = average background count rate.

11.6. Calculation to put the radiometric measurement into the required form for final reporting.

11.6.1. Reported activity.

$$R_x = \frac{A_x}{K \times Q} ,$$

where R_x = sample activity in correct units for reporting (pCi/L),
A_x = sample activity (dis/min),
K = conversion factor (2.22 pCi per dis/min), and
Q = sample quantity analyzed.

11.6.2. The propagated uncertainty of the reported activity is calculated by

$$U_x = |R_x| \times \sqrt{SD\,(A_x)^2 + SD(\overline{E}_x)^2 + SD\,(\overline{E}_t)^2 + SD\,(R_t)^2 + \frac{SD\,(Q)^2}{Q^2}}$$

where U_x = propagated uncertainty of the reported activity,
R_x = reported activity,
$SD\,(A_x)$ = standard deviation of sample activity,
$SD\,(\overline{E}_x)$ = standard deviation of the average sample efficiency,
$SD\,(\overline{E}_t)$ = standard deviation of the average tracer efficiency,
$SD(R_t)$ = standard deviation of the tracer recovery fraction,
$SD\,(Q)$ = standard deviation of the sample quantity aliquoted,
Q = sample quantity aliquoted in reporting units.

12. Proper Waste Disposal Practices

12.1. Discard the acidic solutions from the cation column, Step 9.2.7, into the acid waste drain system.

12.2. Discard the low-level ^{147}Nd solution, Step 9.3.7, into the acid waste system.

12.3. Discard the filter washes into the acid waste system.

12.4. Return excess sample to the EM-9 Sample Management Section.

13. Source Materials

13.1. D. Knab, "A Procedure for the Determination of Americium in Complex Matrices," Los Alamos Scientific Laboratory report LA-7057 (February 1978).

13.2. D. Knab, "Determination of Americium in Small Environmental Samples," *Anal. Chem.* **51**, 1095-1097 (1979).

13.3. D. Knab, "Filtration and Alpha Spectrometric Determination of Am or Pu Coprecipitated with Neodymium Fluoride," Los Alamos Scientific Laboratory document LA-UR-80-2204 (1980).

13.4. M. A. Gautier, E. S. Gladney, and B. T. O'Malley, "Quality Assurance for Environmental Analytical Chemistry: 1985," Los Alamos National Laboratory report LA-10813-MS (1986).

13.5. E. Holm, "Review of Alpha-Particle Spectrometric Measurements of Actinides," *Int. J. Radiat. Isot.* **35**, 285-290 (1984).

13.6. R. L. Williams, "A Computerized Alpha-Particle Sepctrometry System for the Analysis of Low-Level Thorium, Uranium, Plutonium, and Americium Fractions," *Int. J. Radiat. Isot.* **35**, 271-277 (1984).

13.7. *EML Procedures Manual*, 26th ed., H. L. Volchok and G. de Planque, Eds. (Environmental Measurements Laboratory, US Department of Energy, New York, New York, HASL-300, 1986).

13.8. L. A. Currie, "Limits for Qualitative Detection and Quanititative Determination," *Anal. Chem.* **40** (3), 586 (1968).

13.9. "Chemical, Hazardous, and Mixed Waste," Administrative Requirement 10-3, in *Environment, Safety, and Health Manual*, Los Alamos National Laboratory Manual, Chapter 1 (most recent edition).

Revisions or additions to the procedure are marked (▒▒▒). Where a section heading is marked, the entire section has been revised.

TABLE I. ENERGY SPECTRUM FROM ALPHA SPECTROMETER

Channel	Counts	Channel	Counts
60	0	86	18
61	2	87	22
62	1	88	11*
63	1	89	8
64	1	90	2
65	2	91	6
66	3	92	2
67	6	93	5
68	7	94	1
69	17	95	2*
70	14	96	4
71	8	97	4
72	10	98	11
73	14	99	11
74	26	100	9
75	25*	101	20
76	32	102	22—Peak ^{241}Am
77	44	103	18 (5.5 MeV)
78	63	104	11
79	85	105	9
80	108	106	8
81	102	107	4
82	125—Peak ^{243}Am	108	4*
83	94 (5.3 MeV)	109	3
84	63	110	1
85	29	111	0

*Counts integrated over 14 channels, 7 to the left and 6 to the right of the energy peak.

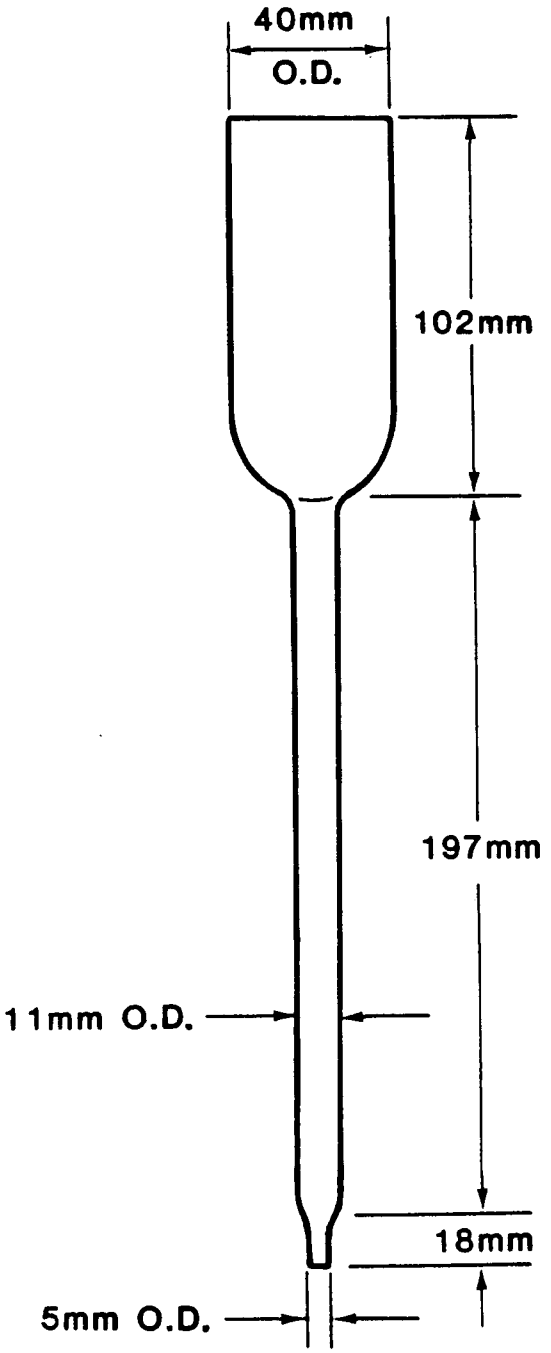

Fig. 1. Ion exchange column for americium.

GAMMA-RAY-EMITTING NUCLIDES IN ENVIRONMENTAL MATRICES — INSTRUMENTAL METHOD

Analyte: ^{7}Be, ^{51}Cr, ^{22}Na, ^{54}Mn, ^{57}Co, ^{60}Co, ^{106}Ru, ^{65}Zn, ^{134}Cs, ^{137}Cs, ^{131}I, ^{40}K, ^{241}Am, ^{152}Eu, ^{154}Eu, and others as required.	**Method No.:** ER130
Matrix: Geologicals, vegetation, or water	**Sensitivity:** variable
Procedure: Instrumental gamma-ray spectrometry using Ge(Li) or high-purity intrinsic Ge (HPGe) detectors	**Accuracy and Precision:** Matrix dependent
Effective Date: 01/01/84	**Authors:** George H. Brooks Daryl Knab Ernest S. Gladney

SAFETY NOTE: Before beginning this procedure, read all of the Material Safety Data Sheets for the chemicals listed in Sec. 7. Read Sec. 4.3 of the EM-9 Safety Manual for information on personal protective clothing and equipment. Read Sec. 12 of this procedure for proper waste disposal practices.

1. Principle of Method

1.1. Gamma-ray emitting nuclides are determined in almost any matrix, without employing chemical separations, by instrumental gamma-ray spectrometry using Ge(Li) or high-purity intrinsic Ge (HPGe) detectors.

1.2. Quantitative data are obtained by comparing net gamma-ray peak areas of the cleanest gamma-ray transition with matrix-based standards of known gamma-nuclide content.

2. Sensitivity

2.1. Sensitivity is limited by the counter background, sample self-absorption, and occasionally by direct gamma-ray interferences.

2.2. It is rare that any two Ge crystals have exactly the same gamma-ray sensitivity characteristics. Sensitivity must be determined individually for each crystal.

3. Accuracy and Precision

3.1. The accuracy for environmental matrices is limited by differences in the density, geometry, self-absorption characteristics of the sample, the isotope of

interest, and the specific detector used. Precision is primarily limited by the low peak/background ratios. By incorporating these factors, along with data from secondary standards, a minimum of 15% uncertainty was determined as a standard for routine analyses. Uncertainties for low-activity samples based on standard counting statistics are reported whenever they exceed 15%.

4. Interferences

4.1. Potential gamma-ray spectral interferences are found in Source Material 12.1.

4.2. Be aware of direct detector contamination from samples or improperly shielded high-level sources in or near the count room. These potential problem areas can be monitored by systematically counting detector backgrounds each week.

5. Collection and Storage of Samples

5.1. Filter and acidify water samples soon after collection. There are no special collection or storage requirements for other matrices.

6. Apparatus

6.1. Filter apparatus for 45 mm filters.

6.2. Pipettes: 5-mL, with disposable tips.

6.3. Gamma-ray spectrometer: equipped with Ge(Li) or HPGe detectors.

6.4. Bottles: 500-mL, polyethylene.

6.5. Analytical balance: 300-g capacity.

6.6. Graduated cylinder: 500-mL.

6.7. Filters: 0.45-μm, Millipore.

6.8. Grinding mill: Brinkman or Wiley.

7. Reagents

7.1. Nitric acid (concentrated, reagent-grade).

7.2. Hydrochloric acid (concentrated, reagent-grade).

7.3. Hydrochloric acid (0.1 M). Dilute 8.3 mL concentrated HCl to 1 L.

8. Calibration and Standards

8.1. Maintain National Institute of Standards and Technology (NIST) traceability throughout the calibration procedures. Radioactive standard solutions can be acquired directly from NIST, Environmental Protection Agency (EPA)-Las Vegas, Amersham, Isotope Products Laboratory, or any other commercial vendor of radioactive standards. In most cases the EPA (or the other vendors) can provide formal traceability to NBS for a minimal cost.

8.2. Counter efficiencies should be generated for each environmental matrix encountered by EM-9. This can be done in either of two ways: (1) generate efficiencies for each specific matrix from mono-isotopic sources (i.e., use a ^{7}Be standard for ^{7}Be efficiency in the matrix of choice), or (2) generate efficiencies for each specific matrix using a multi-isotopic standard (i.e., ^{152}Eu, ^{154}Eu, Sb-Sb-125 mixed solution).

8.2.1. Solutions: Mono-isotopic.

8.2.1.1. Add a weighed (gravimetric) amount of radioactive standard solution to commonly used containers of varying geometries and bring to volume with 0.1 M HCl. Cap tightly to minimize evaporation throughout the standard's lifetime.

8.2.1.2. Count the standards in each geometry that will be used for the samples. Reduce the spectral data using the EM-9 GAMS program on the VAX.

8.2.2. Solutions: Multi-isotopic.

8.2.2.1. Add a weighed (gravimetric) amount of radioactive standard solution to commonly used containers of varying geometries and bring to volume with 0.1 M HCl. Cap tightly to minimize evaporation throughout the standard's lifetime.

8.2.2.2. Count the multi-isotopic standards for each geometry encountered. Reduce the spectral data using the EM-9 GAMS data reduction program on the VAX. Since multipoint standards are being used for the efficiency determination, the correct branching ratios need to be utilized for each energy of each isotope. After the data have been reduced, plot the efficiency as a function of the energy. Determine the equation (linear, logarithmic, power, or exponential) giving the best fit to the data (based on statistical characteristics), and use this to characterize the efficiency for that specific matrix. The analyst need only know the energy and branching ratio of the isotope of

interest to determine the efficiency needed for final quantitative determination of the sample.

8.2.3. Solids: Mono- and Multi-isotopic.

8.2.3.1. Add a weighed amount of radioactive standard solution to the matrix. Dry at room temperature and ball-mill thoroughly to insure homogeneity.

8.2.3.2. Prepare separate containers for each geometry to be calibrated and for varying masses of the matrix (25, 50, and 100 g).

8.2.3.3. Count the standards in each geometry that will be used for the samples. Reduce the spectral data using the EM-9 GAMS program on the VAX.

8.2.4. Determine the absolute efficiencies for each detector annually. This will monitor the performance of each detector regardless of matrix or sample size. If the detector configuration changes, this operation will indicate whether there are any problems with the system.

8.3. Monitor the relative efficiency of each detector monthly using NIST Standard Reference Material (SRM) 4218-E, a ^{152}Eu point source.

8.4. Count backgrounds each week for 10,000 s.

8.5. Maintain detector energy calibrations at 1 keV/channel and check each week with either the NBS SRM 4215, a point-source mixed-nuclide gamma-ray standard, or NBS SRM 4218-E, a ^{152}Eu point source.

9. Procedure

9.1. Sample preparation.

9.1.1. Water samples, 500 mL.

9.1.1.1. Filter the sample using 0.45-μm Millipore filter material.

9.1.1.2. Measure 500 mL of sample into a graduated cylinder and pour into a 500-mL polyethylene bottle.

9.1.2. Water samples, 900 mL.

9.1.2.1. Place 900 mL of water and 5 mL of concentrated HNO_3 into a 1-L glass beaker. Evaporate the solution to dryness overnight on a hot plate, medium setting.

9.1.2.2. Dissolve the residue in approximately 10 mL of concentrated HNO_3. Wash down the sides of the beaker with HNO_3 and 6 drops of HF.

CAUTION: HF is extremely corrosive.

The amount of HNO_3 used is not as critical, but the sides of the beaker must be washed down thoroughly.

9.1.2.3. Boil the sample to dryness to volatilize any silica.

9.1.2.4. Dissolve the residue in approximately 10 mL of concentrated HNO_3 and treat the solution with 30% H_2O_2 until all organic material is destroyed and the sample residue is white or pale yellow and dry. Carefully add H_2O_2 to avoid spattering. Usually 1-2 mL of H_2O_2 are required.

9.1.2.5. Add 10-15 mL of concentrated HNO_3 and 5-10 mL of HCl to the sample. Heat until the evolution of NO_2 ceases and the sample is clear or pale yellow. Continue heating until 2-3 mL remain.

NOTE: Do not let the sample go to dryness.

9.1.2.6. Dissolve the residue in approximately 10 mL of 7.2 M HNO_3, washing down the sides of the beaker.

9.1.2.7. Proceed with Steps 9.1.4.5 through 9.1.4.10.

9.1.3. Soil samples, direct count.

9.1.3.1. Dry the samples for 48 h at 400°C.

9.1.3.2. Weigh 200 g of sample into a 500-mL polyethylene bottle. Add clean 1-in. ball bearings. Cap the bottle and ball-mill the sample for several hours.

9.1.3.3. Weigh 100 g of milled sample into a new 500-mL polyethylene bottle.

9.1.4 Soils, acid leach.

9.1.4.1 Place 2 g of dried soil into a 50-mL beaker.

9.1.4.2. Add 10 mL of concentrated HNO_3 and 5-10 drops of concentrated HCl to the beaker. Swirl carefully and allow to leach overnight at room temperature.

9.1.4.3. Heat the sample until the yellow-orange NO_2 fumes no longer appear.

9.1.4.4. Transfer the sample to a 40-mL glass centrifuge tube. Rinse the beaker with 5 to 10 mL of 7.2 M HNO_3 and add the rinse to the centrifuge tube. Centrifuge for 5 min.

9.1.4.5. Write the sample number on the bottom of a planchet. Record the sample number and planchet weight in a Laboratory notebook.

9.1.4.6. Carefully decant the acid mixture from the centrifuge tube to the preweighed planchet.

9.1.4.7. Rinse the centrifuge tube with approximately 5 mL of 7.2 M HNO_3 and decant the wash to the planchet.

9.1.4.8. Evaporate the solution on the planchet to dryness under a heat lamp. Control the heating rate so that the sample does not spatter.

9.1.4.9. Allow the planchet to cool, reweigh, and record the weight.

9.1.4.10. Cover the sample tightly with mylar film.

9.1.4. Vegetation.

9.1.4.1. Ash samples to a constant weight at 450°C.

9.1.4.2. Grind in Wiley mill, Brinkman mill, or similar device.

9.1.4.3. Weigh up to 100 g of the ground sample into a new 500-mL polyethylene bottle.

9.2. Nuclear counting.

9.2.1. Center the 500-mL sample bottles on the face of the Ge(Li) or HPGe detectors and accumulate a gamma-ray spectra for 10,000 s. Longer counting times may be used for samples of very low activity. Overnight counting (50,000 s) is the practical limit.

9.2.2. Transfer spectral data to the VAX for off-line data reduction. Record sample number, data file name, detector, matrix, and counting date in the Laboratory notebook provided. See count room Method No. CR400 for further information concerning data transfer of analysis.

10. Operation of Equipment

10.1. Refer to the operating manual for the gamma-ray spectrometer (see Method No. CR300).

11. Calculations

11.1. Calculate the concentration for each nuclide using the following formula:

$$R = \frac{(Cs - Cb)e^{-\lambda T}}{E \times CT \times Q} ,$$

where R = concentration of nuclide (pCi/L or pCi/g),
Cs = net counts in the nuclide's gamma-ray peak,
Cb = background counts in the same gamma region,
E = detector efficiency for the nuclide,
CT = count time (s),
Q = sample quantity (g or L),
λ = 0.693/(nuclide half-life in d), and
T = decay time (d).

11.2. Calculate the uncertainty in the nuclide result using the formula:

$$U = |R| \sqrt{\frac{Cs + Cb}{(Cs - Cb)^2} + SIGEFF^2} ,$$

where Cs = net counts in the nuclide's gamma-ray peak,
Cb = background counts in the same gamma region, and
SIGEFF = 0.15 (minimum reported uncertainty).

11.3. Isotope decay data are taken from the RADDECAY program. Use the correct reference date to decay NIST and Environmental Measurements Laboratory (EML) reference materials.

Sample No.	Decay Date
00.00502	01/01/75
00.00560	12/15/80
00.00640-42	04/01/80
00.00651	01/11/84
00.00742	09/09/81

12. Proper Waste Disposal Practices

12.1. Samples from this procedure are returned to Sample Management section.

13. Source Materials

13.1. E. S. Gladney, D. B. Curtis, D. R. Perrin, J. W. Owens, and W. E. Goode, "Nuclear Techniques for the Chemical Analysis of Environmental Materials," Los Alamos Scientific Laboratory report LA-8192-MS (1980).

13.2. M. A. Gautier, E. S. Gladney, and D. R. Perrin, "Quality Assurance for Health and Environmental Chemistry: 1984," Los Alamos National Laboratory report LA-10508-MS (November 1985).

13.3. D. Bowers, Grove Engineering, Radiation Shielding Information Center, Oak Ridge National Laboratory.

13.4. D. C. Kocher, "Radioactive Decay Data Tables," DOE/TIC-11026, Washington D.C., 1981.

Revisions or additions to the procedure are marked (▒▒▒). Where a section heading is marked, the entire section has been revised.

TABLE I. EFFICIENCY FACTORS FOR SOLUTIONS IN 25-ML GLASS SCINTILLATION VIALS (JUNE 1985)

Nuclide	Energy (keV)	Volume (mL)	Efficiency Factors Det #1	Det #2	Det #5	Det #6[a]
^{51}Cr	321	5	0.0118	0.0157	0.0118	0.0108
		10	0.0090	0.0124	0.0089	0.0082
^{60}Co	1173	10	—	0.0311	—	—
^{65}Zn	1115	5	0.0179	0.0156	0.0114	0.0111
		10	0.0139	0.0122	0.0089	0.0089
^{106}Ru	622	5	0.0051	0.0068	0.0051	0.0049
(^{106}Rh)		10	0.0041	0.0054	0.0041	0.0040
^{134}Cs	603	10	—	0.0510	—	—
^{137}Cs	661	10	—	0.0520	—	—

[a] Cap on.

TABLE II. EFFICIENCY FACTORS FOR SOLUTIONS IN 500-ML NALGENE WIDE-MOUTH POLYETHYLENE BOTTLES (MAY 1985)

Nuclide	Energy (keV)	Volume (mL)	Efficiency Factors Det #1	Det #2	Det #3	Det #6[a]
^{7}Be	477	50	0.0046	0.0064	0.0044	0.0048
		100	0.0035	0.0048	0.0034	0.0037
		200	0.0023	0.0031	0.0022	0.0025
		300	0.0017	0.0023	0.0016	0.0019
		400	0.0014	0.0019	0.0013	0.0015
		500	0.0011	0.0015	0.0011	0.0012
^{22}Na	1275	50	0.0151	0.0190	0.0141	0.0165
		100	0.0121	0.0152	0.0114	0.0133
		200	0.0086	0.0106	0.0079	0.0095
		300	0.0065	0.0081	0.0060	0.0073
		400	0.0052	0.0065	0.0049	0.0059
		500	0.0043	0.0053	0.0040	0.0049
^{51}Cr	321	50	0.0064	0.0091	0.0062	0.0065
		100	0.0048	0.0067	0.0047	0.0050
		200	0.0031	0.0043	0.0030	0.0033
		300	0.0023	0.0032	0.0022	0.0025
		400	0.0018	0.0025	0.0018	0.0020
		500	0.0015	0.0021	0.0014	0.0016
^{54}Mn	834	50	0.0261	0.0350	0.0248	0.0282
		100	0.0203	0.0295	0.0193	0.0220
		200	0.0137	0.0181	0.0129	0.0151
		300	0.0103	0.0135	0.0097	0.0114
		400	0.0082	0.0107	0.0077	0.0090
		500	0.0068	0.0087	0.0063	0.0075
^{57}Co	122	50	0.1231	0.1836	0.1072	—
		100	0.0919	—	0.0805	0.0917
		200	—	0.0862	—	—
		300	—	0.0638	0.0372	0.0431
		400	—	0.0497	0.0288	0.0331
		500	0.0266	0.0394	0.0233	0.0271

TABLE II. EFFICIENCY FACTORS FOR SOLUTIONS IN 500-ML NALGENE WIDE-MOUTH POLYETHYLENE BOTTLES (MAY 1985) (cont)

Nuclide	Energy (keV)	Volume (mL)	Efficiency Factors Det #1	Det #2	Det #5	Det #6[a]
^{57}Co	136	50	0.0145	0.0217	0.0130	0.0148
		100	0.0109	0.0162	0.0099	0.0111
		200	0.0070	0.0103	0.0064	0.0072
		300	0.0050	0.0077	0.0046	0.0051
		400	0.0039	0.0059	0.0036	0.0040
		500	0.0032	0.0048	0.0029	0.0033
^{60}Co	1173	50	0.0181	0.0234	0.0169	0.0193
		100	0.0141	0.0182	0.0133	0.0154
		200	0.0098	0.0125	0.0091	0.0108
		300	0.0074	0.0094	0.0069	0.0082
		400	0.0059	0.0075	0.0055	0.0066
		500	0.0049	0.0061	0.0045	0.0055
^{60}Co	1332	50	0.0159	0.0207	0.0150	0.0173
		100	0.0126	0.0162	0.0118	0.0138
		200	0.0087	0.0111	0.0081	0.0098
		300	0.0066	0.0084	0.0061	0.0074
		400	0.0053	0.0067	0.0049	0.0060
		500	0.0044	0.0055	0.0040	0.0049
^{65}Zn	1115	50	0.0103	0.0137	0.0097	0.0110
		100	0.0080	0.0105	0.0075	0.0087
		200	0.0054	0.0071	0.0051	0.0060
		300	0.0041	0.0053	0.0038	0.0046
		400	0.0032	0.0042	0.0030	0.0037
		500	0.0027	0.0034	0.0025	0.0030
^{106}Ru (^{106}Rh)	622	50	0.0030	0.0041	0.0029	0.0033
		100	0.0024	0.0032	0.0023	0.0026
		200	0.0017	0.0021	0.0016	0.0018
		300	0.0012	0.0016	0.0012	0.0013
		400	0.0010	0.0013	0.0009	0.0011
		500	0.0008	0.0010	0.0008	0.0009
^{131}I	364	500	—	0.0149	—	—

TABLE II. EFFICIENCY FACTORS FOR SOLUTIONS IN 500-ML NALGENE WIDE-MOUTH POLYETHYLENE BOTTLES (MAY 1985) (cont)

Nuclide	Energy (keV)	Volume (mL)	Efficiency Factors Det #1	Det #2	Det #5	Det #6[a]
^{134}Cs	603	50	0.0322	—	0.0304	0.0344
		100	0.0252	0.0331	0.0239	0.0270
		200	0.0172	0.0224	0.0163	0.0185
		300	0.0129	0.0169	0.0122	0.0141
		400	0.0101	0.0133	0.0095	0.0112
		500	0.0084	0.0110	0.0079	0.0092
^{134}Cs	795	50	0.0220	—	0.0210	0.0235
		100	0.0171	0.0224	0.0162	0.0185
		200	0.0118	0.0153	0.0110	0.0131
		300	0.0089	0.0115	0.0083	0.0098
		400	0.0071	0.0092	0.0066	0.0079
		500	0.0058	0.0075	0.0054	0.0065
^{137}Cs	661	50	0.0285	0.0388	0.0271	0.0320
		100	0.0220	0.0295	0.0209	0.0245
		200	0.0149	0.0197	0.0141	0.0162
		300	0.0111	0.0148	0.0105	0.0125
		400	0.0087	0.0116	0.0083	0.0080
		500	0.0071	0.0096	0.0069	0.0080

[a] Cap on.

TABLE III. EFFICIENCY FACTORS FOR SOLUTIONS IN MARINELLI BEAKERS (FEBRUARY 1986)

Nuclide	Energy (keV)	Volume (L)	Efficiency Factor Det #2
^{7}Be	477	1.0	0.0026
		3.8	0.0015
^{22}Na	1274	1.0	0.0086
		3.8	0.0047
^{51}Cr	321	1.0	0.0038
		3.8	0.0019
^{54}Mn	834	1.0	0.0140
		3.8	0.0072
^{57}Co	122	1.0	0.0656
		3.8	0.0054
^{60}Co	1173	1.0	0.0099
		3.8	0.0054
^{60}Co	1332	1.0	0.0088
		3.8	0.0048
^{65}Zn	1115	1.0	0.0057
		3.8	0.0029
^{106}Ru	622	1.0	0.0015
(^{106}Rh)		3.8	0.0008
^{131}I	364	1.0	0.0230
		3.8	0.0111
^{134}Cs	796	1.0	0.0131
		3.8	0.0070
^{137}Cs	662	1.0	0.0152
		3.8	0.0079

TABLE IV. EFFICIENCY FACTORS FOR SOILS IN 500-ML NALGENE WIDE-MOUTH POLYETHYLENE BOTTLES (DECEMBER 1985)

Nuclide	Energy (keV)	Weight (g)	Efficiency Factors Det #1	Det #2	Det #5	Det #6[a]
^{40}K	1461	50	0.0019	0.0023	0.0015	0.0010
		100	0.0018	—	—	—
^{137}Cs	662	100	0.0218	0.0304	0.0194	0.0245
^{241}Am	60	10	—	0.1343	—	0.0826
		20	—	0.1131	—	0.0725
		30	—	0.1056	—	0.0688
		40	—	0.1025	—	0.0661
		50	—	0.0927	—	0.0585
		60	—	0.0804	—	0.0522
		80	—	0.0723	—	0.0466
		100	—	0.0641	—	0.0414

[a] Cap on.

QUALITATIVE GAMMA-RAY SCAN OF ENVIRONMENTAL MATRICES

Analyte: Gamma-ray-emitting nuclides	**Method No.:** ER140
Matrices: All types	**Minimum Detectable Activity:** 0.5 cpm
Procedure: High-purity germanium (HPGe) gamma-ray spectrometry	**Accuracy and Precision:** Qualitative only
Effective Date: 07/26/90	**Authors:** George H. Brooks Ernest S. Gladney Daniel R. Perrin

SAFETY NOTE: **Before beginning this procedure, read all of the Material Safety Data Sheets for the chemicals listed in Sec. 7. Read Sec. 4.3 of the EM-9 Safety Manual for information on personal protective clothing and equipment. Read Sec. 12 of this procedure for proper waste disposal practices.**

1. Principle of Method

1.1. All environmental matrices that will fit into a 500-mL polyethylene bottle can be counted to qualitatively observe gamma-ray nuclides in the sample. Live snakes, lizards, and other animals have been assayed on this system.

2. Sensitivity

2.1. Approximately 0.5 cpm of gamma-emitting nuclides can be observed above the background for each detector. The absolute sensitivity varies somewhat among the detectors because of their individual physical properties.

3. Accuracy and Precision

3.1. This is a qualitative procedure and the accuracy is affected only by incorrect calibration of the spectrometer. Precision does not apply.

4. Interferences

4.1. None are known.

5. Collection and Storage of Samples

5.1. No special precautions are required. Submit samples in any of the following preapproved clean sample containers: 500-mL polyethylene bottles, standard AIRNET charcoal cartridges, or filters in the standard alpha/beta counting

configuration. There are some exceptions to these size constraints. Ask the count room manager whether a unique sample configuration can be accommodated.

5.2. Normal sample aliquots for a 500-mL polyethylene bottle are 100 g for soils and vegetation and 500 mL for waters. The charcoal cartridges and filters are standard units of 1 each. Any other matrix configuration may have specific requirements; ask the count room manager for additional information.

6. Apparatus

6.1. Gamma-ray spectrometer: equipped with large, high-resolution, high-efficiency, high-purity germanium (HPGe) detectors.

6.2. Polyethylene bottles: 500-mL, wide-mouth, screw-capped.

7. Reagents

7.1. None required.

8. Calibration and Standards

8.1. Each HPGe detector is multiplexed to a multichannel pulse height analyzer (PHA) and is individually energy calibrated using National Institute of Standards and Technology (NIST) Standard Reference Material (SRM) 4370-C, ^{152}Eu Radioactivity Solution Standard. Three-point calibration technique is used to achieve an energy calibration of approximately 1.0 keV per channel. This equates to 0-2000 keV in one-half memory (4096 channels).

8.2. Use the fine gain potentiometer on each linear amplifier to adjust the peak channel of the 779-keV ^{152}Eu gamma-ray line to channel 779 in the memory region of the analyzer for each detector.

8.3. Examine the location of the 122- and 1408-keV ^{152}Eu lines. Calculate the difference between the channel number and the location of the 1408 line. Adjust the dc level potentiometer for the number of channels (either plus or minus from the set channel) necessary to accommodate the change. Readjust the fine gain potentiometer so that the 779 line resides in the 779 channel. The system should now be set to a linear response within the 0-2 MeV range.

8.4. If the calibration is off by more than 5 channels, contact the count room manager and have the system properly calibrated.

9. Procedure

9.1. Manual counting.

9.1.1. Place a 500-mL polyethylene counting bottle (or any other approved matrix configuration) in the sample holding vessel. Place the vessel directly on the face of the HPGe detectors (counting caves 5 and 6 only).

9.1.2. Invoke the ADCAM program and set the preset counting time to 10,000 s. Begin counting the sample.

9.2. Automated counting.

9.2.1. Place the 500-mL polyethylene counting bottle (or any other approved matrix configuration) in the sample holding vessel. Place these sample vessels in the sample holding bays for each detector (detectors 7 and 11 only in caves 5 and 6).

9.2.2. Invoke the automated/robotics program on the PC by typing **MENU**. This will bring up the automated counting menu, from which the user can begin the sample loading, documentation, and counting procedures. Set the counting times to 10,000 s.

10. Operation of Equipment

10.1. See Method No. CR400 for operation of the gamma-ray spectrometer.

10.2. Robot operation. See the PRI/ADCAM manual for proper operation of the automated system.

11. Calculations

11.1. Calculations for both manual and automated count modes.

11.1.1. Invoke the multichannel analyzer (MCA) emulator on the PC. Call up the specific file(s) from storage using the **FILES** function, with the **RECALL** program. Perform a background subtraction (**STRIP**) with an appropriate background spectrum, using the **CALCULATE** function within the emulator.

11.1.2. Within the **CALCULATE** function, invoke the **PEAK SEARCH** function to identify possible peak centroids.

11.1.3. Invoke the **FILES** function. Initiate the **REPORT** function, whereby an appropriate report will be generated and sent to the printer. This report will give the program's "best estimate" of what the peak should

be. A report is shown in Fig. 1. The **REPORT** function also provides a variety of other information about the peak, such as its centroid, total counts within the peak, and a full-width-at-half-maximum (FWHM) determination. Check these reports of peak identification against any of the well known gamma-ray energy tables for inaccuracies that may be caused by the report generation program. See Source Materials 13.3, 13.4, or 13.5.

12. Proper Waste Disposal Practices

12.1. Return the samples to the Sample Management section for disposal when all results are complete.

13. Source Materials

13.1. E. S. Gladney, D. B. Curtis, D. R. Perrin, J. W. Owens, and W. E. Goode, "Nuclear Techniques for the Chemical Analysis of Environmental Materials," Los Alamos Scientific Laboratory report LA-8192-MS, pp. 55-89 (1980).

13.2. R. Gunnink, J. B. Niday, R. P. Anderson, and R. A. Meyer, "Gamma-Ray Energies and Intensities," Lawrence Radiation Laboratory, Livermore report UCID-15439 (1969).

13.3. *Table of Isotopes*, 7th ed., C. M. Lederer and V. S. Shirley, Eds., (John Wiley & Sons, Inc., New York, 1978).

13.4. W. W. Bowman and K. W. MacMurdo, "Radioactive-Decay Gammas, Ordered by Energy and Nuclide," *Atomic Data and Nuclear Data Tables* 13, 89-292 (1974).

13.5. *Chart of the Nuclides*, 13th ed., F. W. Walker, D. G. Miller, and F. Feiner, Eds., (General Electric Company, San Jose, California, 1984).

Revisions or additions to the procedure are marked (▒). Where a section heading is marked, the entire section has been revised.

```
MCB # 1        ACQ 09-27-89  AT 17:00:08   RT : 10901.2    LT : 10000.0
               No detector description was entered
               soil standard, det#7, 0.418709uci tot act

ROI #  1-1     RANGE :   64 =   32.48keV  to   96 =   48.49keV
               AREA : Gross = 866633    Net = 533077      +/- 1426
               CENTROID : 77.35   =   39.16keV
               SHAPE : Fwhm =   6.37keV    Fwtm =  12.66keV

               ID : CS-137  at    36.40keV
               Corrected Rate = 53.310        +/- 0.14

ROI #  1-2     RANGE :  160 =   80.51keV  to  172 =   86.52keV
               AREA : Gross = 365581    Net = 8083        +/- 652
               CENTROID : 166.66  =   83.85keV
               SHAPE : Fwhm =   2.00keV    Fwtm =   3.10keV

               ID : NP-237  at    86.50keV
               Corrected Rate = 0.808         +/- 0.07

ROI #  1-3     RANGE :  236 =  118.54keV  to  248 =  124.54keV
               AREA : Gross = 2692592   Net = 2296622    +/- 1661
               CENTROID : 242.49  =  121.79keV
               SHAPE : Fwhm =   1.05keV    Fwtm =   2.11keV

               ID : EU-152  at   121.78keV
               Corrected Rate = 229.662       +/- 0.17

ROI #  1-4     RANGE :  289 =  145.06keV  to  301 =  151.06keV
               AREA : Gross = 236370    Net = 4488        +/- 524
               CENTROID : 294.96  =  148.04keV
               SHAPE : Fwhm =   1.70keV    Fwtm =   3.44keV

               ID : CE-141  at   145.44keV
               Corrected Rate = 0.449         +/- 0.05

ROI #  1-5     RANGE :  316 =  158.57keV  to  328 =  164.57keV
               AREA : Gross = 225447    Net = 1825        +/- 513
               CENTROID : 321.90  =  161.52keV
               SHAPE : Fwhm =   0.86keV    Fwtm =   3.15keV

               ID : BA-140  at   162.64keV
               Corrected Rate = 0.183         +/- 0.05
```

Fig. 1. ADCAM report.

GROSS GAMMA IN ENVIRONMENTAL MATRICES

Analyte: All gamma-ray activities	**Method No.:** ER150
Matrix: Soil, biologicals, and water	**Minimum Detectable Activity:** Water 600 pCi/L Soil 3 pCi/g
Procedure: Instrumental gamma-ray NaI counting	**Accuracy and Precision:** Water 108% ± 53% Soil 104% ± 3%
Effective Date: 11/24/87	**Authors:** Ernest S. Gladney George H. Brooks

SAFETY NOTE: Before beginning this procedure, read all of the Material Safety Data Sheets for the chemicals listed in Sec. 7. Read Sec. 4.3 of the EM-9 Safety Manual for information on personal protective clothing and equipment.

1. Principle of Method

1.1. Samples are packaged in 500-mL (16-oz Nalgene) plastic bottles and are counted in a NaI[Tl] well-type scintillation detector for 5 min without chemical processing.

1.2. The sample size is 500 mL for liquids and 100 g for solids.

2. Sensitivity

2.1. The limits of detection are 600 pCi/L for aqueous solutions and 3 pCi/g for solids at the 661-keV ^{137}Cs line.

3. Accuracy and Precision

3.1. This method is intended as a qualitative assessment of gross gamma activity, but the accuracy and precision have been assessed using ^{137}Cs standards. For 0.5-L water samples the accuracy at 1400 pCi/L is 108% ± 53%. For 100-g soil samples at 220 pCi/g the accuracy is 104% ± 3%.

3.2. Samples showing activity levels significantly above background may be subjected to further analysis to determine the exact source of the activity.

4. Interferences

4.1. Although the method is intended to measure gamma-emitting isotopes, the wall thickness of the detector is such that high-energy beta particles from the sample will also be counted.

5. Collection and Storage of Samples

5.1. There are no special collection and storage requirements.

6. Apparatus

6.1. Gamma counter: Model No. 550 EG&G Ortec, equipped with a 4-in. diam × 6-in. NaI[Tl] well-type scintillation detector, with a 3-in. diam × 5.5-in. well and a single-channel analyzer. The system window is adjusted to observe 0- to 2-MeV gamma rays.

6.2. Amplifier: Model No. 572, EG&G Ortec.

6.3. Timer/counter: Model No. 871, EG&G Ortec.

6.4. Bias supply: Model No. 459 EG&G Ortec.

6.5. Bottles: 500-mL, polyethylene, Nalgene, catalog no. 20002-0016.

6.6. Analytical balance: 300-g minimum capacity.

6.7. Bags: Low-density polyethylene (LDPE) clear bags (0.002-in.-thick) sized to fit 500-mL bottles. The bags protect the detector from surface contamination on the bottles.

6.8. Funnel: polyethylene.

7. Reagents

7.1. No reagents are required.

8. Calibration and Standards

8.1. Prepare all standards from National Bureau of Standards (NBS) Standard Reference Material (SRM) 4233-B, ^{137}Cs Burn-up standard.

8.1.1. Prepare the liquid standard by diluting an aliquot of the stock solution to 500 mL with distilled water. Place the standard in a 500-mL polyethylene bottle.

8.1.2. Prepare the soil standard by evaporating an aliquot of the stock solution on 100 g of blank soil under an infrared lamp. The solution must not contact the walls or bottom of the container. Thoroughly blend the dry standard with a stainless steel spatula and transfer it to a polyethylene bottle with the aid of a polyethylene powder funnel and a small brush.

8.2. Count an appropriate quality control material with each sample set to record detector system performance.

8.3. The liquid blank is 500 mL of distilled water and the soil blank is 100 g of washed deep-well sand.

8.3.1. Count the appropriate blank with each sample set. Use the data to calculate the background count of the counter.

9. Procedure

9.1. Soils.

9.1.1. Weigh 100 g of a dried soil sample into a polyethylene bottle.

9.1.2. Tightly cap the bottle and clean off any exterior contamination.

9.1.3. Place the sample into a plastic bag and insert it into the NaI[Tl] detector well.

9.1.4. Count the sample for 5 min.

9.1.5. Record the total counts and count time in minutes on the gross gamma analysis sheet accompanying the sample from the radiochemistry laboratory.

9.1.6. Count a soil quality control sample, a soil blank, and a soil standard for 5 min each. Record the counts of the quality control sample, blank sample, and soil standard on the gross gamma analysis sheet (Fig. 1).

9.2. Water.

9.2.1. Place 500 mL of a filtered water sample into a polyethylene bottle.

9.2.2. Proceed with Steps 9.1.2 through 9.1.5.

9.2.3. Count a water quality control sample, a water blank, and a water standard for 5 min each. Record the counts of the quality control sample, the blank sample, and the water standard on the gross gamma analysis sheet (Fig. 1).

10. Operation of Equipment

10.1. Check the EG&G Ortec Model No. 871 Timer/Counter parameters before each counting session. The timer display should read **5.0**, and the **Time Base** select light should read **Min**. Push the appropriate switches to modify the parameters to the correct setting. The counter display should read **Counter**. Use the Counter/Timer select switch to adjust to the correct setting.

10.2. The EG&G Ortec Model No. 459 Bias Supply should be set at 1000 V. If the bias supply is not at the correct setting, adjust the potentiometer to provide the correct voltage.

NOTE: If the voltage is incorrectly set, adjust to the correct voltage with increments no larger than 100 V/s.

11. Calculations

11.1. Calculations of radiometric counting data for determinations are made without a radiotracer. Most data values are assumed to have Poisson distributions and all time-measurement errors are assumed to be insignificant.

11.2. Counting efficiency.

11.2.1. The counting efficiency of the counter for a single standard run is calculated using the following equation:

$$E = \frac{\left(\frac{C_s}{T_s} - \overline{B}\right)}{A_s} ,$$

where E = efficiency (counts per disintegration),
C_s = gross counts for the standards,
T_s = counting time for standard (min),
$\overline{B}$ = average background count rate, and
A_s = activity of the standard (dpm).

11.2.2. The average counter efficiency is calculated from a running average of the last n values of individual E determinations using the following equation:

$$\bar{E} = \frac{\sum_{i=1}^{n} E_i}{n} ,$$

where $\bar{E}$ = the running average of the counting efficiency,
E_i = the individual counting efficiencies from Step 11.2.1, and
n = the number of measurements used for calculation.

11.2.3. The standard deviation of $\bar{E}$ is calculated as follows:

$$SD(\bar{E}) = \bar{E} \times \sqrt{\frac{\sum_{i=1}^{n} (E_i - \bar{E})^2}{(n-1)\, n\, \bar{E}^2} + \frac{(\sigma_{A_s})^2}{A_s^2}} ,$$

where $SD(\bar{E})$ = standard deviation of the average efficiency,
$\bar{E}$ = average efficiency (counts per disintegration) from Step 11.2.2,
E_i = individual efficiencies from Step 11.2.1,
n = number of values of E used,
A_s = activity of the standard (dpm), and
σA_s = stated standard deviation associated with the known value of A_s.

11.2.4. The standard deviation of an individual E is calculated as follows:

$$SD(E) = E \times \sqrt{\frac{\frac{C_s}{T_s^2} + \frac{C_b}{T_b^2}}{\left(\frac{C_s}{T_s} - \frac{C_b}{T_b}\right)^2} + \frac{(\sigma_{A_s})^2}{A_s^2}} ,$$

where $SD(E)$ = standard deviation of E (counts per disintegration),
E = counting efficiency from Step 11.2.1,
C_s = gross counts for the standard,
T_s = counting time for the standard,
C_b = gross counts for the background,
T_b = counting time for the background (min),
A_s = activity of the standard (dpm), and
σA_s = standard deviation of standard activity.

11.3. Background.

11.3.1. The background count rate is calculated as follows:

$$B = \frac{C_b}{T_b} ,$$

where B = background count rate (cpm),
C_b = gross counts of background, and
T_b = counting time of the background (min).

11.3.2. A running average of the background count rate is calculated using the following equation:

$$\overline{B} = \frac{\sum_{i=1}^{n} B}{n} ,$$

where $\overline{B}$ = average background count rate,
B = background count rate, and
n = number of values used.

11.3.3. The standard deviation of the average background count rate is calculated using the following equation:

$$SD(\overline{B}) = \overline{B} \times \sqrt{\frac{\sum_{i=1}^{n} (B - \overline{B})^2}{(n-1) \times n \times \overline{B}^2}} ,$$

where $SD(\overline{B})$ = standard deviation of the running average of the background,
$\overline{B}$ = average background from Step 11.3.2,
B = individual background count rate, and
n = number of values used.

11.4. Sample activity.

11.4.1. The activity in the samples is calculated as follows:

$$A_x = \frac{\left(\frac{C_x}{T_x} - \overline{B}\right)}{\overline{E}} ,$$

where A_x = sample activity (dpm),
C_x = gross counts for the sample,
T_x = counting time for the sample (min),
$\overline{B}$ = average background count rate (cpm), and
$\overline{E}$ = average counting efficiency.

11.4.2. The standard deviation of the activity in the sample is calculated as follows:

$$SD\ (A_x) = |A_x| \times \sqrt{\frac{\frac{C_x}{T_x^2}}{\left(\frac{C_x}{T_x} - \overline{B}\right)^2}} ,$$

where $SD\ (A_x)$ = standard deviation of sample activity (dpm),
$|A_x|$ = absolute value of A_x from Step 11.4.1,
C_x = gross counts of sample,
T_x = sample counting time, and
$\overline{B}$ = average background count rate.

11.4.3. The minimum detectable activity for high-background instruments is determined to be three times the standard deviation of the background.

$$MDA = \frac{3 \times SD\ (B)}{K} ,$$

where MDA = minimum detectable activity (dpm),
SD (B) = standard deviation of the background count rate (cpm), and
K = constant in sample units.

11.5. Calculation to put the radiometric measurement into the required form for final reporting.

11.5.1. The reported activity is calculated as follows:

$$R_x = \frac{A_x}{K \times Q} ,$$

where R_x = sample activity in correct units for reporting (pCi/L),
A_x = sample activity (dpm),
K = conversion factor (2.22 pCi/dpm), and
Q = sample quantity analyzed (0.5 L or 100 g).

11.5.2. The propagated uncertainty of the reported activity is calculated using the following equation:

$$U_x = |R_x| \times \sqrt{SD\,(A_x)^2 + SD\,(\overline{B})^2 + SD\,(\overline{E})^2 + \frac{SD\,(Q)^2}{Q^2}} ,$$

where U_x = propagated uncertainty of the reported activity,
$|R_x|$ = absolute value of the reported activity,
$SD(A_x)$ = standard deviation of sample activity,
$SD(\overline{B})$ = standard deviation of the average background,
$SD(\overline{E})$ = standard deviation of the average efficiency,
$SD(Q)$ = standard deviation of the sample quantity aliquoted, and
Q = sample quantity aliquoted in reporting units.

12. Source Materials

12.1. M. A. Gautier, E. S. Gladney, and B. T. O'Malley, "Quality Assurance for Health and Environmental Chemistry: 1985," Los Alamos National Laboratory report LA-10813-MS (1986).

12.2. "American National Standard for Performance Criteria for Radiobioassay," draft, American National Standards Institute, ANSI N13.30 (1989).

12.3. L. A. Currie, "Limits for Qualitative Detection and Quantitative Determination," *Analytical Chemistry* **40**, 586-593 (1968).

ANALYSIS _____ ANALYST _____ DATE _____

SAMPLE NO.	REQUEST NO.	OWNER	WEIGHT OR VOLUME	RESIDUE WEIGHT	SAMPLE TYPE	GROSS COUNTS

Fig. 1. Gross gamma analysis data sheet.

PLUTONIUM IN ENVIRONMENTAL MATRICES — ALPHA SPECTROMETRY

Analyte: ^{238}Pu, $^{239+240}Pu$	**Method No.:** ER160
Matrix: Soils, water, air particulates, and biologicals	**Minimum Detectable Activity:** 0.02 pCi/sample
Procedure: Ion exchange and alpha spectrometry	**Accuracy and Precision:** See Step 3.1.
Effective Date: 01/01/84	**Authors:** Richard J. Peters Daryl Knab Wanita Eberhardt

SAFETY NOTE: Before beginning this procedure, read all of the Material Safety Data Sheets for the chemicals listed in Sec. 7. Read Sec. 4.3 of the EM-9 Safety Manual for additional information on personal protective clothing and equipment. Read Sec. 12 of this procedure and Source Material 13.8 for proper waste disposal practices.

1. Principle of Method

1.1. Environmental samples are wet or dry ashed. Plutonium is isolated by ion exchange and electrodeposited on stainless-steel planchets for alpha spectroscopy.

1.2. All samples are traced with either ^{242}Pu or ^{236}Pu before being wet ashed.

1.3. Americium-241 may also be determined on the same sample fraction if ^{243}Am tracer is added to the sample before wet ashing.

2. Sensitivity

2.1. Sensitivity is limited by the counter background.

2.2. For routine measurements with an 80,000-s counting period and a counting efficiency of 25%, the minimum detection limit (the 95th percentile of the background distribution) is 0.02 pCi per sample.

3. Accuracy and Precision

3.1. The National Institute for Standards and Technology (NIST), the Environmental Protection Agency, and the DOE Environmental Measurements Laboratory all produce and distribute certified reference materials for plutonium analysis in several matrices. We prepare in-house QC materials by pipetting known amounts of plutonium standards onto blank environmental materials. The mean

recoveries of plutonium in various matrices over a 3-year period are tabulated below (number of determinations in parentheses):

Matrix	% ^{238}Pu				% ^{239}Pu			
Biologicals	93	±	11	(6)	86	±	14	(19)
Filters	88	±	9	(21)	92	±	10	(27)
Silicates	95	±	30	(12)	110	±	20	(27)
Waters	90	±	12	(56)	95	±	13	(133)

4. Interferences

4.1. Interference is caused by alpha activity with energies in the range of 4.8 to 5.6 MeV.

5. Collection and Storage of Samples

5.1. Acidify water samples with 10 mL of concentrated HNO_3 in the field at the time of collection. Filter, spike with tracer(s), and reacidify samples within 24 h of receipt in the laboratory and before sample storage.

5.2. There are no special collection or storage requirements for environmental matrices.

6. Apparatus

6.1. Bottles: 500-mL, linear polyethylene, Nalgene.

6.2. Beakers: Teflon, 600-mL, flat-bottom.

6.3. Beakers: 100-, 250-, 400-, 600-, and 1000-mL, Pyrex.

6.4. Filters: 9-cm, glass-fiber, Whatman GF/A.

6.5. Filter funnels: glass, 75-mm.

6.6. Crucibles: 30-mL, platinum, with covers.

6.7. Ion-exchange columns: glass, typically around 197 mm long by 7 mm i.d. with a 100-mL reservoir at the top and a tip tapered to 2 mm i.d. (see Fig. 1).

6.8. Electrodeposition apparatus: equipped with a dc power supply to provide 1 A of regulated current to each electrolytic cell.

6.9. Electrolytic cell: glass cell body 2.22-cm-o.d. by 1.9-cm-i.d., 5.2 cm long.

6.9.1. The 2.22-cm-diam stainless-steel plate is held in place on one end of the glass cell body by a rubber band created by removing approximately 1.5 cm of the closed end of a rubber finger cot and cutting a 0.5-cm hole in it. This band is stretched over the plate and up onto the glass cell body, holding the plate tightly in place with a liquid-tight seal.

6.9.2. A platinum electrode of 1.9-cm diam is press-fitted into the top of the glass cell body.

6.10. Alpha spectrometer: equipped with a 1024-channel analyzer using 300-mm^2 silicon-surface barrier detectors.

6.11. Proportional counter: 2-pi, windowless, gas-flow.

6.12. Hot plates: magnetic stirring, Corning model no. PC-351.

6.13. Stainless-steel disks: 1.59-cm (5/8-in.) disk fabricated from 15- to 20-mil 316 stainless steel, cold-rolled or No. 4 finish.

6.14. Stirring bars: 1.5-in., Teflon-coated.

6.15. Fume hood.

6.16. Glass wool.

6.17. Plastic wrap: 5-mil polyvinyl chloride film.

6.18. Graduated cylinders: 10-, 100-, and 500-mL.

6.19. Pipettes: 1-mL.

6.20. Eyedroppers: disposable, glass.

6.21. Ashing oven.

6.22. Muffle furnace.

6.23. Wash bottles: 1-L, polyethylene.

7. Reagents

7.1. Tracers.

7.1.1. Plutonium-242 tracer (99.98% isotopic purity). Dilute to 10 dpm/mL. Lawrence Livermore National Laboratory, Radiochemistry Division.

7.1.2. Plutonium-236 tracer (approximately 98% purity). Dilute to 10 dpm/mL. Oak Ridge National Laboratory, Isotope Sales Department.

7.1.3. Americium-243 tracer (99.9% isotopic purity). Dilute to 10 dpm/mL. Lawrence Livermore National Laboratory, Radiochemistry Division.

7.2. Hydrogen peroxide (30% solution).

7.3. Anion exchange resin. AG-1X4, 50-100 mesh, chloride form. Bio-Rad Laboratories, Richmond, CA.

7.4. Nitric acid (concentrated, reagent-grade).

7.5. Nitric acid (7.2 M). Dilute 2750 mL of concentrated HNO_3 with distilled water to a total volume of 6000 mL.

7.6. Hydrofluoric acid (concentrated, 48%, reagent-grade).

7.7. Boric acid (crystalline).

7.8. Boric acid (saturated). Add enough H_3BO_3 crystals (approximately 6 g at room temperature) to 100 mL of distilled water so that some of the crystals remain undissolved.

7.9. Sodium nitrite (1 M). Dissolve 69 g of crystalline $NaNO_2$ in 1000 mL distilled water.

7.10. Hydrochloric acid (concentrated, reagent-grade).

7.11. Hydrochloric acid (8 M). Dilute 1333 mL of concentrated HCl with distilled water to a total volume of 2000 mL.

7.12. Hydrochloric acid (1 M). Dilute 500 mL of concentrated HCl with distilled water to a total volume of 6000 mL.

7.13. Hydrochloric acid (0.1 M). Dilute 8 mL of concentrated HCl with distilled water to a total volume of 1000 mL.

7.14. Ammonium iodide (analytical reagent-grade).

7.15. Hydrochloric acid • sodium iodide solution (1 M). Dissolve 2 g of NaI in 2000 mL of 1 M HCl. This solution will process 24 columns. Prepare fresh before each use.

7.16. Ammonium oxalate (4%). Dissolve 40 g of ammonium oxalate crystals in 1000 mL of distilled water. This solution is stable for one month.

7.17. Methyl alcohol.

7.18. Ammonium hydroxide (1%). Dilute 15 mL of concentrated NH_4OH with distilled water to a total volume of 500 mL.

8. Calibration and Standards

8.1. All samples are traced with ^{243}Am and ^{242}Pu tracer solutions that have been standardized by electrodeposition and gross alpha counting. The values for the plutonium tracers are cross-checked yearly by tracing with a certified secondary ^{239}Pu solution and alpha counting.

8.2. Calibration of the alpha spectrometer.

8.2.1. The alpha secondary standard (No. 5) contains the isotopes ^{238}Pu, ^{239}Pu, and ^{242}Pu and is standardized in a gas-flow proportional counter using the NIST Standard Reference Material (SRM) 4906-B17, the ^{238}Pu primary standard.

8.2.2. Calibration counts are made for 1020 s. The efficiency of each detector is determined by integrating the counts in 20 channels (13 channels to the left of the peak and 6 channels to the right of the peak) of the energy spectrum of each of the three isotopes.

8.2.3. Background counts are accumulated for each energy spectrum for each detector for 60,000 s.

9. Procedure

9.1. Sample preparation.

9.1.1. Soil dissolution.

9.1.1.1. Weigh a 10-g aliquot of a dry soil sample into a 500-mL polyethylene bottle.

9.1.1.2. Add 1.00 mL of appropriate tracer(s) to the sample.

9.1.1.3. **Carefully** add approximately 300 mL of concentrated HNO_3. Carbonate soils can react vigorously. Add 200 mL of 48% HF.

CAUTION: HF is extremely hazardous. Wear rubber gloves, eye protection, and a lab coat. Completely clean up all spills and wash thoroughly after using HF. Make all HF transfers in an exhaust fume hood to avoid toxic fumes.

9.1.1.4. Place a 1.5-in. Teflon-coated stirring bar in the bottle and cap loosely. The cap must be loose enough to permit generated gases (principally SiF_4 and nitrous oxides) to escape to prevent pressure buildup.

9.1.1.5. Place the bottle in a hot water bath on a magnetic stirring hot plate and stir the sample overnight while heating. Cover the bottle and beaker with plastic wrap to keep the water from evaporating from the water bath.

NOTE: A 1-L beaker on a Corning model PC-351 hot plate set at "2" can be left unattended for 15 h (overnight).

9.1.1.6. Allow the mixture to settle for 10 min and decant into a 600-mL Teflon beaker.

9.1.1.7. A second leach with HF or HF • HNO_3 may be needed if large quartz crystals are present. Finely suspended material generally will be dissolved in the subsequent boildown. Large amounts of certain mineral crystals, like magnetite, zircons, etc., may require special treatment.

9.1.1.8. Evaporate the mixture to dryness.

9.1.1.9. Add approximately 200 mL of concentrated HCl and 5 g of H_3BO_3 to the polyethylene bottles containing the soil residue. Cap the bottles and shake well.

9.1.1.10. Pour the HCl • H_3BO_3 mixture into the Teflon beaker. Rinse the bottle with a little distilled water and transfer the water rinse to the Teflon beaker. Retrieve the stirring bar and discard the bottle.

9.1.1.11. Heat the mixture in the Teflon beaker until approximately 10 mL remains. Add approximately 100 mL of concentrated HNO_3 and boil to remove the HCl.

9.1.1.12. **Cautiously** add 30% H_2O_2 a few drops at a time from a squeeze bottle to oxidize any organic residues. Continue adding HNO_3 and H_2O_2 until the solution is light yellow and clear.

9.1.1.13. Evaporate the solution until the first salts appear.

9.1.1.14. Dissolve the residue in 100 mL of 7.2 M HNO_3. Add 1 g of H_3BO_3 and allow the solution to cool.

9.1.1.15. Filter the solution through a Whatman GF/A glass-fiber filter into a 600-mL glass beaker.

9.1.1.16. Wash the residue on the filter (mainly excess H_3BO_3) with enough 7.2 M HNO_3 to give a final volume (filtrate plus washings) of 200 mL.

NOTE: For samples that requrie total uranium by kinetic phosphorimetric analysis, transfer a 1% aliquot of this solution into a plastic centrifuge tube.

9.1.1.17. Cover the beaker with plastic wrap until ready for ion-exchange separation.

9.1.2. Water samples.

9.1.2.1. Measure a 500-mL aliquot of the water sample into a 600-mL Pyrex beaker.

9.1.2.2. Add 1.00 mL of the appropriate tracer(s).

9.1.2.3. Add 10 mL of concentrated HNO_3 and evaporate the solution to dryness.

NOTE: A 1-L beaker on a Corning Model PC-351 hot plate set at "2" can be left unattended for 15 h (overnight).

9.1.2.4. Add 10 mL of concentrated HNO_3 and heat to boiling. When the sample begins steaming, **Carefully** add 6 drops of 48% HF while swirling the sample. Evaporate to dryness.

CAUTION: HF is extremely hazardous. Wear rubber gloves, eye protection, and a lab coat. Completely clean up all spills and wash thoroughly after using HF. Make all HF transfers in an exhaust fume hood to avoid toxic fumes.

9.1.2.5. Carefully wash down the sides of the beaker with about 10 mL of concentrated HNO_3.

9.1.2.6. While heating the sample, add 30% H_2O_2 by drops to decompose any organic material. Repeated additions of concentrated HNO_3 and of H_2O_2 may be required to completely ash some samples. The wet ashing is complete when the residue is white or very light yellow, and dry.

9.1.2.7. Dissolve the residue in approximately 20 mL of concentrated HNO_3, carefully washing down the sides of the beaker.

9.1.2.8. Add 5 mL of concentrated HCl to the beaker and evaporate to approximately 10 mL. Remove the beaker from the hot plate and cool.

9.1.2.9. Add 100 mL of 7.2 M HNO_3 and 1 mL of saturated H_3BO_3 solution to the sample.

9.1.2.10. Cover the beaker with plastic wrap and store until ready for ion-exchange separation.

9.1.3. Vegetation dissolution.

9.1.3.1. Large samples are dried at 60°C in tared glass beakers (up to 4 L) until a constant weight is obtained on successive days.

9.1.3.2. Add 50 mL of distilled water to the beaker. Cover with perforated aluminum foil. Ash at 100-200°C for 8 h.

9.1.3.3. Ash at 300°C overnight.

9.1.3.4. Ash at 400°C for 8 h.

9.1.3.5. Ash at 500°C until the sample ash is completely white.

9.1.3.6. Cool and weigh the sample. Record the ash weight.

9.1.3.7. Repeat Steps 9.1.3.5 and 9.1.3.6 until a constant weight is achieved.

NOTE: The entire ash sample is frequently transferred to a 500-mL polyethylene bottle for gamma-emitting radionuclide analysis using Ge(Li) gamma-ray spectroscopy.

9.1.3.8. Dissolve the entire sample (up to 10 g) in approximately 200 mL of HNO_3. Add 1.00 mL of tracer(s) solution before continuing the dissolution.

9.1.3.9. Heat the sample on a hot plate and add 30% H_2O_2 in small amounts until the sample dries to a clear residue. The color may vary from pure white to deep lilac.

NOTE: Attention to the temperature is important because samples can bump violently if too hot.

9.1.3.10. Dissolve the residue in a mixture of 50 mL of concentrated HNO_3 and 25 mL of concentrated HCl. Boil to approximately 25 mL to remove the HCl.

9.1.3.11. Remove the sample from the hot plate and cool. Dilute to 100 mL with 7.2 N HNO_3. Let the sample stand overnight.

9.1.3.12. Filter the sample through a Whatman No. 42 filter paper. Rinse the beaker with 7.2 N HNO_3 to transfer all residue onto the filter paper. Save the filtrate for Step 9.1.3.17.

9.1.3.13. Return the filter paper and the residue to a 200-mL Teflon beaker. Add 100 mL of concentrated HF and 100 mL of concentrated HNO_3. Evaporate to dryness overnight on a hot plate set on low.

9.1.3.14. Dissolve the residue in 50 mL of concentrated HNO_3 and treat with 30% H_2O_2 as in Step 9.1.3.9.

9.1.3.15. Dissolve the residue in a mixture of 50 mL of concentrated HNO_3 and 25 mL of concentrated HCl. Boil to approximately 25 mL (all HCl is expelled). Add 5 g H_3BO_3.

9.1.3.16. Cool the sample and dilute to 100 mL with 7.2 N HNO_3. Let the sample stand overnight.

9.1.3.17. Filter the sample through a Whatman GF/A glass-fiber filter into the beaker containing the filtrate from Step 9.1.3.12. Wash the filter to give a final volume (filtrate plus washings) of 300 mL.

9.1.3.18. Cover the beaker with plastic wrap until ready for ion-exchange separation.

9.1.4. Tissue dissolution (including bone).

9.1.4.1. Weigh a 10-g aliquot of wet soft tissue or bone, excluding feathers and hide, into a 600-mL glass beaker.

9.1.4.2. Add 1.00 mL of the appropriate tracer(s).

9.1.4.3. Wet-ash the sample with concentrated HNO_3 and 30% H_2O_2 until a clear or light yellow solution is obtained.

NOTE: Do not use HF because CaF_2 will precipitate.

9.1.4.4. Evaporate the solution until just dry.

9.1.4.5. Continue the procedure for water samples from Step 9.1.2.7 to 9.1.2.10.

9.1.5. Filter dissolution (air-particulate, industrial hygiene swipe).

9.1.5.1. Place the air-particulate filter in a 30-mL platinum crucible.

9.1.5.2. Record the crucible and sample number.

9.1.5.3. Place the crucible in a cold muffle furnace. Turn the furnace to 500°C and dry-ash for 4 h. Turn the furnace off and remove the crucible. Allow to cool for 0.5 h.

9.1.5.4. Ashing will not be complete if glass-fiber filters are used. After cooling, add 5 to 10 mL of concentrated HF a few drops at a time. Cover the crucible with a platinum lid.

9.1.5.5. Evaporate the sample to dryness on medium heat.

9.1.5.6. Repeat Steps 9.1.5.4 and 9.1.5.5. Remove the sample from the hot plate and allow to cool.

9.1.5.7. Carefully wash down the cover and sides of the crucible with approximately 5 mL of concentrated HNO_3.

9.1.5.8. **Cautiously** add 1-2 drops 30% H_2O_2 to the crucible. When the vigorous reaction subsides, repeat the addition of H_2O_2 until the solution is clear or straw-colored.

9.1.5.9. Evaporate the solution in the crucible to approximately 1 mL.

9.1.5.10. Add 2 mL of saturated H_3BO_3 solution and heat to dissolve the sample.

9.1.5.11. Transfer the sample to a **new** 250-mL beaker using approximately 10 mL of concentrated HNO_3. Add 5 mL of concentrated HNO_3 to the platinum crucible. Repeat Steps 9.1.5.10 and 9.1.5.11 once.

9.1.5.12. Add the appropriate tracer(s) and 10 mL of concentrated HCl to the sample. Boil down the solution to approximately 5 mL. Add tracer(s) at this step, for two reasons: (1) platinum crucibles are dissolved by the HCl in the tracer solution, and (2) the polystyrene filters usually submitted are

hydrophobic. Addition of tracer at this time introduces a consistent low bias in our data of about 5-7%.

9.1.5.13. Add enough 7.2 M HNO_3 to bring the sample to approximately 100 mL.

9.1.5.14. Cover the sample and store until ready for ion-exchange separation.

9.2. Ion-exchange separation.

9.2.1. Add 1 mL of 1 M $NaNO_2$ solution per 100 mL of sample solution to the sample and mix thoroughly. Allow the sample to stand at room temperature for approximately 1 h.

9.2.2. Prepare a slurry of anion-exchange resin with distilled water. Transfer the resin to a 1-L polyethylene wash bottle and fill with distilled water.

9.2.3. Anion-exchange column preparation.

9.2.3.1. Pack a small glass wool plug tightly into the tip of the ion exchange tube, filling only the tapered tip.

9.2.3.2. Transfer the resin slurry into the ion-exchange tube until the settled resin bed reaches **just to the bottom** of the reservoir. Use distilled water from a wash bottle when transferring the resin slurry to prevent air bubbles from forming in the resin.

9.2.3.3. Place a 600-mL glass beaker, 400-mL for Am fraction, under the column. Wash the resin bed with three 20-mL aliquots of 7.2 M HNO_3. The final wash should be done with a wash bottle making sure **all** resin is washed from the reservoir into the column proper.

9.2.3.4. Gently place a glass wool plug on top of the column to contain the resin while part of the third 20-mL aliquot of 7.2 M HNO_3 remains in the reservoir.

9.2.4. Pour the sample solution through the resin column, keeping the reservoir filled with approximately 40 mL of solution.

9.2.4.1. If the ^{241}Am content of the sample is also to be determined, save the recovered sample solution from Step 9.2.4 and the first 20-mL aliquot of 7.2 M HNO_3 wash **only**.

9.2.4.2. Store this solution for future analysis using the americium procedure, Method No. ER120, Step 9.2.1. The sample must have been traced with ^{243}Am in addition to one of the plutonium tracers.

9.2.5. Wash the beaker twice with 20 mL of 7.2 M HNO_3, passing the wash through the column. Wash the column with two 40-mL aliquots of 7.2 M HNO_3.

9.2.6. Wash the column with two 20-mL aliquots of 8 M HCl. Allow each aliquot to drain to the top of the glass wool plug. Retain the washes in a beaker.

9.2.7. Elute the plutonium from the column into a new 100-mL beaker with four 20-mL aliquots of a freshly prepared solution containing 1 g/L of NH_4I in 1 M HCl.

9.2.8. Cover the beaker with plastic wrap and store until ready for electrodeposition.

9.3. Electrodeposition preparation.

9.3.1. Add 1 mL of concentrated HNO_3 to the 80-mL plutonium eluate and evaporate to dryness. The solution may be evaporated on a hot plate set on low and left overnight.

9.3.2. Add 1 mL of concentrated HNO_3 and 5 mL of concentrated HCl to the residue and evaporate until just dry. Let the last few drops air dry (remove from the hot plate) to avoid baking the sample. A high percentage of the sample is lost if baked. Repeat this step if a visible residue remains.

9.3.3. Add 5 mL of concentrated HCl and evaporate using low heat until the first dry spots appear. Avoid baking the sample.

9.3.4. Wash down the sides of the beaker with approximately 5 mL of concentrated HCl.

9.3.5. Cover the sample with plastic wrap. Store for at least 24 h.

9.4. Electrodeposition.

9.4.1. Evaporate the sample solution on medium heat until a dry spot appears that cannot be covered by swirling the beaker. Allow the beaker to cool.

9.4.2. Electrodeposition cell preparation.

9.4.2.1. Clean a stainless-steel planchet with methyl alcohol.

9.4.2.2. Engrave the sample number on the back of the planchet.

9.4.2.3. Place the planchet on the bottom of an electrodeposition tower and hold in place with a rubber gasket. Rinse the cell with distilled water to check for leaks.

9.4.3. Add 3 mL of 4% ammonium oxalate solution to the beaker. Transfer this solution to an electrodeposition cell with 0.1 M HCl until the cell is approximately half filled.

9.4.4. Allow the current to flow for 30 min at 1 A.

9.4.5. While the current is still on, quench the reaction by filling the cell with 1% NH_4OH solution. Remove the cell from the electrodeposition apparatus.

9.4.6. Empty the cell and rinse the stainless-steel planchet with water followed by a rinse with methyl alcohol into the original beaker.

9.4.7. Heat the planchet to a dull red color in the flame of a bunsen burner.

9.4.8. Allow the planchet to cool, place in a labeled envelope, and submit for alpha counting.

10. Operation of Equipment

10.1. Refer to the operating manual for the alpha spectrometer and count room Method No. CR100.

11. Calculations

11.1. Count samples for 80,000 s. Determine the counts for each of the three isotopes by integrating the counts in 20 channels for each energy region.

11.2. Counting efficiency determination for ^{238}Pu, ^{239}Pu, ^{242}Pu. The efficiencies are determined independently, but using the same equations.

11.2.1. Counting efficiencies for the tracer peak (E_t) and the analyte peak (E_x) will be calculated separately, using the same equations. The counting efficiency of the counter for a standard run is given by

$$E = \frac{\left(\frac{C_s}{T_s} - \overline{B}_s\right)}{A_s} ,$$

where E = counting efficiency in the peak of interest (counts per disintegration),
C_s = gross counts for the standard,
T_s = counting time for the standard (min),
$\overline{B}_s$ = average background count rate in the peak of interest, and
A_s = activity of the standard (dpm).

11.2.2. The average counter efficiency is calculated from a running average of the last n values of individual E determination:

$$\overline{E} = \frac{\sum_{i=1}^{n} E_i}{n} ,$$

where $\overline{E}$ = the running average of the counting efficiency,
E_i = the individual counting efficiencies from Step 11.2.1, and
n = the number of measurements used for calculation.

11.2.3. The standard deviation of $\overline{E}$ is

$$SD(\overline{E}) = \overline{E} \times \sqrt{\frac{\sum_{i=1}^{n} (E_i - \overline{E})^2 + SD(\overline{B}_s)^2}{(n-1)\, n\, \overline{E}^{\,2}} + \frac{(\sigma_{A_s})^2}{A_s^{\,2}}} ,$$

where $SD(\overline{E})$ = standard deviation of the average efficiency,
$\overline{E}$ = average efficiency (counts per disintegration) from Step 11.2.2,
E_i = individual efficiencies from Step 11.2.1,
$SD(\overline{B}_s)$ = standard deviation of the average background in the peak of interest,
n = number of values of E used,
A_s = activity of the standard (dpm), and
σ_{A_s} = stated standard deviation associated with the known value of A_s.

11.2.4. The standard deviation of an individual E is

$$SD\ (E) = E \times \sqrt{\frac{\frac{C_s}{T_s^2} + \frac{C_{bs}}{T_{bs}^2}}{\left(\frac{C_s}{T_s} - \frac{C_{bs}}{T_{bs}}\right)^2} + \frac{(\sigma_{A_s})^2}{A_s^2}} ,$$

where SD (E) = standard deviation of E (counts per disintegration),
E = counting efficiency from Step 11.2.1,
C_s = gross counts for the standard,
T_s = counting time for the standard,
C_{bs} = gross counts for the background,
T_{bs} = counting time for the background,
A_s = activity of the standard, and
σ_{A_s} = standard deviation of standard activity.

11.3. Background determination. There will be different backgrounds for the tracer (B_t) and the analyte (B_x) peaks, but the calculations will be the same.

11.3.1. The background count rate is

$$B = \frac{C_b}{T_b} ,$$

where B = background count rate (cpm),
C_b = gross counts for the background, and
T_b = counting time for the background (min).

11.3.2. A running average background count rate is calculated by

$$\overline{B} = \frac{\sum_{i=1}^{n} B}{n} ,$$

where $\overline{B}$ = average background count rate,
B = background count rate, and
n = number of values used.

11.3.3. The standard deviation of the average background count rate is calculated by

$$SD(\overline{B}) = \overline{B} \times \sqrt{\frac{\sum_{i=1}^{n} (B - \overline{B})^2}{(n - 1)}} ,$$

where $SD(\overline{B})$ = standard deviation of the running average of the background,
$\overline{B}$ = average background from Step 11.3.2,
B = individual background count rate, and
n = number of values used.

11.3.4. The minimum detectable activity for low-background instruments is determined by

$$MDA = \frac{(4.65 \times SD(B_x)) + 3}{K \times T_x} ,$$

where MDA = minimum detectable activity (dpm),
$SD(B_x)$ = standard deviation of the background count rate (cpm),
K = constant in sample units,
T_x = counting time,
4.65 = constant, and
3 = constant.

11.4 Tracer recovery.

11.4.1. The tracer recovery is calculated from:

$$R_t = \frac{C_t}{T_t \times E_t \times A_t} ,$$

where R_t = fraction of the tracer recovered,
C_t = total counts in the tracer peak,
T_t = counting time for the tracer (min),
E_t = counting efficiency for the tracer peak, and
A_t = activity of tracer added to the sample (dpm).

11.4.2. The standard deviation of the tracer recovery is

$$SD(R_t) = R_t \times \sqrt{\frac{\frac{C_t}{T_t^2} + SD(B_t)}{\left(\frac{C_t}{T_t} - \overline{B}_t\right)^2} + \frac{\sigma_{A_t}^2}{A_t^2}} \quad ,$$

where $SD(R_t)$ = standard deviation of the tracer recovery fraction,
R_t = tracer recovery fraction,
C_t = total counts in the tracer peak,
T_t = counting time (min),
$SD(B_t)$ = standard deviation of the background in the tracer peak,
B_t = the background in the tracer peak,
σ_{A_t} = standard deviation of the known value of A_t, and
A_t = activity of the standard.

11.5. Sample activity.

11.5.1. The activity in the samples is given by

$$A_x = \frac{\left(\frac{C_x}{T_x} - \overline{B}_x\right)}{\overline{E}_x \times R_t} \quad ,$$

where A_x = sample activity (dpm),
C_x = gross counts for the sample,
T_x = counting time for the sample (min),
$\overline{B}_x$ = average background count rate (cpm),
$\overline{E}_x$ = average counting efficiency, and
R_t = tracer recovery fraction.

11.5.2. The standard deviation of the activity in the sample is given by

$$SD\ (A_x) = |A_x| \times \frac{\sqrt{\frac{C_x}{T_x^2} + SD^2\ (\overline{B}_x)}}{\left(\frac{C_x}{T_x} - \overline{B}_x\right)^2} \quad ,$$

where $SD\ (A_x)$ = standard deviation of sample activity (dpm),
$|\ A_x|$ = absolute value of A_x from Step 11.5.1,

C_x = gross counts for the sample,
T_x = sample counting time,
$\overline{B}_x$ = average background count rate, and
$SD(\overline{B}_x)$ = standard deviation of the average background.

11.6. Calculation to put the radiometric measurement into the required form for final reporting.

11.6.1. Reported activity.

$$R_x = \frac{A_x}{K \times Q} ,$$

where R_x = sample activity in correct units for reporting (pCi/L),
A_x = sample activity (dpm),
K = conversion factor (2.22 pCi/dpm), and
Q = sample quantity analyzed.

11.6.2. The propagated uncertainty of the reported activity is calculated by

$$U_x = |R_x| \times \sqrt{\frac{SD\,(A_x)^2}{A_x^2} + \frac{SD\,(\overline{E}_x)^2}{\overline{E}_x^{\,2}} + \frac{SD\,(\overline{E}_t)^2}{\overline{E}_t^{\,2}} + \frac{SD\,(R_t)^2}{R_t^{\,2}} + \frac{SD\,(Q)^2}{Q^2}} ,$$

where U_x = propagated uncertainty of the reported activity,
R_x = reported activity,
$SD\,(A_x)$ = standard deviation of sample activity,
$SD\,(\overline{E}_x)$ = standard deviation of the average sample efficiency,
$SD\,(\overline{E}_t)$ = standard deviation of the average tracer efficiency,
$SD(R_t)$ = standard deviation of the tracer recovery fraction,
$SD\,(Q)$ = standard deviation of the sample quantity aliquoted,
A_x = sample activity,
$\overline{E}_x$ = average count efficiency in the sample peak,
$\overline{E}_t$ = average count efficiency in the tracer peak,
R_t = tracer recovery fraction, and
Q = sample quantity aliquoted in reporting units.

12. Proper Waste Disposal Practices

12.1. Discard the column washes from Step 9.2.6 into the acid drain system.

12.2 Discard the plating solution from Step 9.4.6 into the acid drain system.

12.3. Discard the plates into the radioactive waste container.

12.4. Waste pickup.

12.4.1. See AR 10-3 for the general Laboratory policy on waste disposal.

12.4.2. Fill out the waste Profile Request Form (PRF) and send it to EM-8 along with all pertinent MSDS sheets. The form will be returned to the group Waste Management coordinator, who will return it to the waste generator.

12.4.3. After the PRF is signed off and returned by EM-8 with a reference number, fill out the Radioactive Solid Waste Disposal (RSWD) request form. Send this form and the original PRF(s) to EM-7.

12.4.4. After the RSWD is returned, call HS-1 to monitor and tag the container.

12.4.5. After the container has been tagged by the monitor, call EM-7 to arrange for pickup of the container.

13. Source Materials

13.1. I. K. Kressin and G. R. Waterbury, "The Quantitative Separation of Plutonium from Various Ions by Anion Exchange," *Anal. Chem.* **34**, 1598-1601 (1962).

13.2. C. W. Sill and F. D. Hindman, "Preparation and Testing of Standard Soils Containing Known Quantities of Radionuclides," *Anal. Chem.* **46**, 113-118 (1974).

13.3. M. A. Gautier, E. S. Gladney, and B. T. O'Malley, "Quality Assurance for Environmental Analytical Chemistry: 1985," Los Alamos National Laboratory report LA-10813-MS (1986).

13.4. R. L. Williams, "A Computerized Alpha-Particle Spectrometry System for the Analysis of Low-Level Thorium, Uranium, Plutonium and Americium Fractions," *Int. J. Appl. Radiat. Isot.* **35**, 271-277 (1984).

13.5. E. Holm, "Review of Alpha-Particle Spectrometric Measurements of Actinides," *Int. J. Appl. Radiat. Isot.* **35**, 285-290 (1984).

13.6. *EML Procedures Manual*, 26th ed., H. L. Volchok and G. de Planque, Eds. (Environmental Measurements Laboratory, US Department of Energy, New York, New York, HASL-300, 1986).

13.7. L. A. Currie, "Limits for Qualitative Detection and Quantitative Determination," *Anal. Chem.* **40**, 586 (1968).

13.8. "Chemical, Hazardous, and Mixed Waste," Administrative Requirement 10-3, in *Environment, Safety, and Health Manual*, Los Alamos National Laboratory Manual, Chapter 1 (most recent edition).

Revisions or additions to the procedure are marked (▒▒▒▒). Where a section heading is marked, the entire section has been revised.

TABLE I. ENERGY SPECTRUM FROM ALPHA SPECTROMETER

Channel	Counts	Channel	Counts
30	1	71	360—Peak ^{239}Pu
31	4	72	279 (5.15 MeV)
32	2	73	154
33	7	74	76
34	5*	75	16
35	5	76	3
36	7	77	1*
37	11	78	1
38	12	79	0
39	30	80	0
40	35	81	0
41	58	82	0
42	71	83	0
43	130	84	0
44	127	85	1
45	171	86	0
46	181—Peak ^{242}Pu	87	0
47	133 (4.9 MeV)	88	0
48	66	89	0
49	25	90	1
50	2	91	3*
51	1	92	0
52	4*	93	0
53	1	94	1
54	1	95	1
55	0	96	3
56	6	97	5
57	5	98	7
58	7	99	9
59	7*	100	19
60	12	101	21
61	21	102	28
62	24	103	50—Peak ^{238}Pu
63	31	104	32 (5.5 MeV)
64	50	105	31
65	81	106	27
66	109	107	22

TABLE I. ENERGY SPECTRUM FROM ALPHA SPECTROMETER (Cont.)

Channel	Counts	Channel	Counts
67	145	108	4
68	215	109	0*
69	270	110	0
70	335	111	0

*Counts integrated over 19 channels, 12 to the left and 6 to the right of the energy peak.

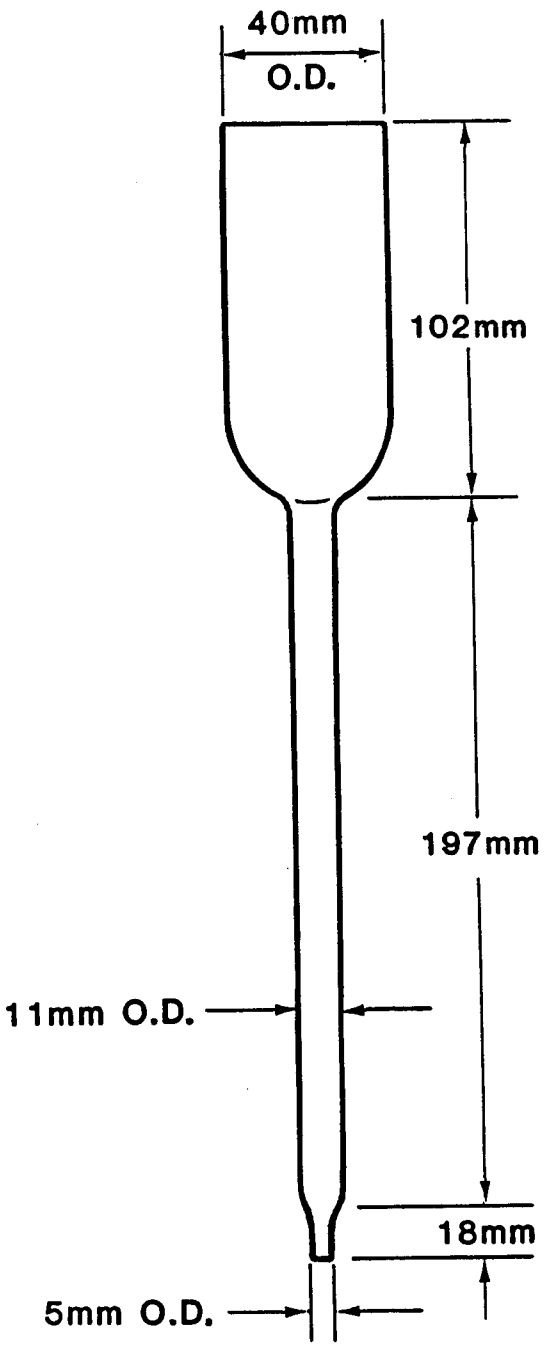

Fig. 1. Ion exchange column for plutonium.

RADIUM-226 IN GEOLOGICALS — GAMMA-RAY SPECTROMETRY

Analyte: Radium-226	**Method No.:** ER170
Matrices: All geologicals (soils, rocks, sediments, ores)	**Minimum Detectable Concentration:** 1 pCi/g
Procedure: Instrumental gamma-ray spectrometry	**Accuracy and Precision:** 100% ± 6% above 10 pCi/g
Effective Date: 01/01/84	**Authors:** Ernest S. Gladney Richard J. Peters Wanita Eberhardt

SAFETY NOTE: Before beginning this procedure, read all of the Material Safety Data Sheets for the chemicals listed in Sec. 7. Read Sec. 4.3 of the EM-9 Safety Manual for further information on personal protective clothing and equipment.

1. Principles of Method

1.1. Silicate materials from almost any source contain some ^{226}Ra from the decay of naturally occurring uranium.

1.2. Radium-226 has a variety of decay products, some of which emit gamma radiation. Some of these daughter nuclides are gases and must be contained to assure complete establishment of radioactive decay equilibrium.

1.3. Quantitative data on ^{226}Ra concentrations are obtained by instrumental gamma-ray spectrometry following a 30-d ingrowth period for reestablishment of radioactive equilibrium on samples that have been packaged in gas-tight containers.

2. Sensitivity

2.1. A detection limit of approximately 1 pCi/g can be achieved in our laboratory. The detection limit is influenced primarily by the uncertainty of the background determination.

3. Accuracy and Precision

3.1. The Canadian Certified Reference Materials Project (CCRMP) has a number of well-characterized uranium ores with certified ^{226}Ra concentrations. Results from the analysis of these materials are shown in the following table:

CCRMP No.	EM-9 (pCi/g)			CCRMP Certified Value (pCi/g)		
BL-1	72	±	3	75	±	4
BL-2	1510	±	60	1490	±	30
BL-3	3320	±	150	3350	±	70
BL-4	560	±	25	566	±	12
BL-5	21200	±	1000	23400	±	520
DL-1	12.2	±	1.3	13.2	±	0.7
DL-1A	35	±	3	38.2	±	1.1
DH-1	594	±	30	578	±	12
DH-1A	790	±	40	859	±	30

4. Interferences

4.1. Direct spectral interference is experienced from ^{226}Ra daughter products in materials surrounding the detectors. Cement block walls and concrete floors commonly have several pCi/g of ^{226}Ra. Careful assessment of the size and stability of the counting system background is essential for quantitative work.

5. Collection and Storage of Samples

5.1. There are no special collection and storage requirements.

6. Apparatus

6.1. Gamma-ray spectrometer: equipped with large, high-resolution, high-efficiency hyper-pure geranium (HPGE) detectors.

6.2. Seamless metal cans: 20- to 100-g capacity. Ellisco, Inc., Pennsauken, New Jersey.

6.3. Tape with low gas permeability (black plastic electrician's tape is adequate).

6.4. Analytical balance: top-loading, 100-g capacity.

6.5. Ball mill.

6.6. Bottles: polyethylene, 500-mL.

6.7. Pipettes: disposable, 1-mL.

6.8. Hammer.

6.9. Steel ball bearings: 1-in.-diam.

7. Reagents

7.1. Silicone dioxide or sea sand (powdered, $^{226}Ra < 0.001$ pCi/g).

8. Calibration and Standards

8.1. Maintain National Bureau of Standards (NBS) traceability throughout the calibration procedure. The concentration of ^{226}Ra in reference materials is standardized against NBS Standard Reference Material (SRM) 4958, (Radium-226 Gamma-ray Standard).

8.1.1. Fill seamless cans half full with SiO_2.

8.1.2. Pipette 1 mL of NBS SRM 4958 on the SiO_2 surface, spreading the droplets evenly over the entire surface.

8.1.3. Fill the can with SiO_2 and tape shut for the 30-d ingrowth of ^{226}Ra decay products.

8.1.4. Two different sample geometries are currently employed. Prepare a set of calibration standards for each geometry.

8.2. Standardize routine samples against CCRMP or other geological reference materials with well-established ^{226}Ra contents. Package samples and reference materials in identical cans so that constant counting geometry is maintained on the gamma-ray spectrometer.

8.3. Take 10,000-s background counts in conjunction with each sample set.

8.4. Maintain detector energy calibrations at 1 keV/channel and check each week with NBS SRM 4218-E, ^{152}Eu Point-Source Standard.

9. Procedure

9.1. Sample preparation.

9.1.1. Break the sample into pea-sized chunks in the original sample bag using a hammer or other convenient implement.

9.1.2. Place approximately 200 g of sample into a 500-mL polyethylene bottle. Add several steel ball bearings. Close the bottles, tape on the caps, and ball-mill until a uniform powder is obtained (usually overnight).

9.1.3. Weigh each seamless can. Fill the seamless cans completely with powdered sample and seal with electrical tape. Hold the samples at least 30-d to allow for daughter nuclide ingrowth.

9.2. Gamma-ray spectrometry.

9.2.1. After at least a 30-d ingrowth, count all samples and standards in the same position on the face of the same HPGE detector. Accumulate data for 1,000 to 50,000 s depending upon the ^{226}Ra content.

9.2.2. Transfer the spectral data to a VAX disc for off-line data reduction. Record the sample number, data filename, detector number, matrix, and counting date in a Laboratory notebook.

10. Operation of Equipment

10.1. See the operator's manual for operation of the gamma-ray spectrometer.

11. Calculations

11.1. Calculate the ^{226}Ra result using the following equation:

$$R = \frac{C_s - C_b}{E \times CT \times Q} ,$$

where R = ^{226}Ra concentration (pCi/g),
C_s = net counts in the 609-keV peak of ^{214}Bi,
C_b = background counts,
E = detector efficiency,
CT = counting time (s), and
Q = sample weight (g).

NOTE: No decay corrections are required because both sample and standard are in radioactive equilibrium.

11.2. Calculate the uncertainty in the ^{226}Ra result using the following equation:

$$U = |R| \times \sqrt{\left(\frac{\sqrt{(C_s + C_b)}}{C_s + C_b}\right)^2 + (S_e)^2} ,$$

where U = uncertainty (pCi/g),
R = ^{226}Ra concentration (pCi/g),
C_s = net counts in the 609-keV peak of ^{214}Bi,
C_b = background counts, and
S_e = 0.05 (minimum reported uncertainty).

12. Source Materials

12.1. E. S. Gladney, W. Eberhardt, and R. J. Peters, "Determination of ^{226}Ra in CCRMP Reference Samples by Independent Nuclear Methods," *Geostandards Newsletter* **6**, 5-6 (1982).

12.2. H. F. Steger, "Certified Reference Materials," CANMET report CM84-14E (1984).

RADIUM-226 IN WATER — RADON EMANATION

Analyte: Radium-226	**Method No.:** ER180
Matrix: Water	**Minimum Detectable Concentration:** 0.05 pCi/sample
Procedure: Gas phase separation of ^{222}Rn with alpha scintillation counting of daughter nuclides	**Accuracy and Precision:** 97% ± 6%
Effective Date: 01/01/84	**Authors:** Richard J. Peters Bob B. Bates Daryl Knab

SAFETY NOTE: Before beginning this procedure, read all of the Material Safety Data Sheets for the chemicals listed in Sec. 7. Read Sec. 4.3 of the EM-9 Safety Manual for information on personal protective clothing and equipment. Read Sec. 12 of this procedure and Source Material 13.6 for proper waste disposal practices.

1. Principle of Method

1.1. The ^{226}Ra in the sample is concentrated and separated by coprecipitation with barium sulfate.

1.2. The concentrated sample is redissolved and sealed in a purged flask (bubbler).

1.3. After 21 d of ingrowth of the ^{222}Rn daughter into the sample, the ^{222}Rn is transferred to a scintillation cell using helium as the carrier and counted on an alpha scintillation radon counter.

2. Sensitivity

2.1. The method has a detection limit of ~0.05 pCi/sample when counted for 1000 minutes.

2.2. The detection limit is strongly influenced by individual scintillation cell backgrounds.

3. Accuracy and Precision

3.1. The National Institute for Standards and Technology (NIST) has no dilute radium-in-water Standard Reference Materials (SRMs). Accuracy and precision for waters are evaluated by our results from EPA Radium in Water

intercomparison samples and from in-house QC samples using EPA solution no. 1617. Over a period of 5 years, the determination of radium in water in these materials had a mean recovery of 97% ± 6% on 48 measurements.

4. Interference

4.1. Interference by other radioisotopes is highly unlikely in water samples. Only ^{226}Ra produces ^{222}Rn, a noble gas, which is readily separated by bubbling helium through the aqueous sample.

5. Collection and Storage of Samples

5.1. Filter and acidify water samples as soon after collection as possible.

6. Apparatus

6.1. Drying tube (see Fig. 1).

6.2. Radon emanation apparatus (see Fig. 2).

6.3. Scintillation cells (see Fig. 3): Rocky Mountain Scientific Glass Blowing Co.

6.4. Beakers: 1-L.

6.5. Radon bubbler (see Fig. 4).

6.6. Filtration system.

6.7. Filter: 0.45-μm, Millipore.

6.8. Crucible: platinum, 100-mL.

6.9. De Khotinsky cement.

6.10. Analytical balance: top-loading, 300-g capacity.

6.11. Graduated cylinder: 50-mL.

6.12. Glass wool.

6.13. Pipettes: Pasteur, disposable, 5.75 in. long by 7.0 mm o.d.

7. Reagents

7.1. Barium carrier. Dissolve 3.0 g of $Ba(NO_3)_2$ in 1000 mL of distilled water.

7.2. Hydrochloric acid (concentrated, reagent-grade).

7.3. Hydrochloric acid (1 M). Dilute 83 mL of concentrated HCl to 1 L with distilled water.

7.4. Hydrochloric acid (4 M). Dilute 333 mL of concentrated HCl to 1 L with distilled water.

7.5. Hydrochloric acid (2.4 M). Dilute 200 mL of concentrated HCl to 1 L with distilled water.

7.6. Sulfuric acid (concentrated, reagent-grade).

7.7. Sulfuric acid (0.5 M). Dilute 14 mL of concentrated H_2SO_4 to 500 mL with distilled water.

7.8. Phosphoric acid (concentrated, reagent-grade).

7.9. Hydrofluoric acid (concentrated, reagent-grade).

7.10. Ascarite (drying reagent, 8-20 mesh).

7.11. Magnesium perchlorate (reagent-grade).

7.12. Helium gas.

8. Calibration and Standards

8.1. Calibrate all determinations against NIST SRM 4958, Radium-226 Gamma-ray Standard.

8.2. Working standards should contain approximately 0.5 to 50 pCi of total radium.

9. Procedure

9.1. Radium separation by coprecipitation on barium sulfate.

9.1.1. Add 20 mL of HCl to a 900-mL water sample and stir.

9.1.2. Add 20 mL of Ba carrier solution to the sample while stirring.

9.1.3. Add 20 mL of concentrated H_2SO_4 to the sample while stirring.

9.1.4. Cover the beaker with a watch glass and let stand overnight.

9.1.5. Filter the sample through a 0.45-μm filter. Rinse the beaker and funnel several times with distilled water.

9.1.6. Rinse the beaker and funnel with 0.5 M H_2SO_4.

9.1.7. Fold the filter carefully and transfer it to a platinum crucible.

9.2. Barium sulfate dissolution.

9.2.1. Hold the crucible over a flame and heat slowly to prevent the filter from bursting into flame. Continue ashing until all of the material is white.

9.2.2. Cool the crucible. Add 1.2 mL of H_3PO_4 and 2.5 mL of HF. Place the crucible on a hot plate set on low (approximately 200°C) for 3-4 h.

9.2.3. Raise the temperature to approximately 300°C (medium setting) for 20 min.

9.2.4. Raise the temperature to approximately 400°C (high setting) for 20 min.

9.2.5. Hold the crucible over an open flame and heat below redness to dissolve the precipitate. When the solution is clear, carefully manipulate the crucible so that the H_3PO_4 covers all areas of the crucible including the lip. Heat again and swirl several times.

9.2.6. Remove the crucible from the flame and allow to cool. Fill the crucible with 4 M HCl and place on a hot plate set at approximately 200°C overnight.

9.2.7. Add 6 mL of 2.4 M HCl to the crucible. Warm the sample and swirl until the precipitate is in solution.

9.2.8. Transfer the sample to a de-emanation bubbler, rinsing the crucible several times with distilled water (see Fig. 4).

9.2.9. Heat the ground-glass portion of the upper stopcock and the bubbler. Join the two parts using De Khotinsky cement.

9.2.10. With both stopcocks open, place the bubbler on the de-emanation stand. Attach the helium line to the lower stopcock and open the helium tank valve (see Fig. 2).

9.2.11. Slowly open the helium control valve until bubbles start to rise above the bottom frit (see Fig. 2). De-emanate for 10 min.

9.2.12. At the end of 10 min, close both stopcocks and record the time on the calculation sheet (see Fig. 5, T_1). Store the bubbler for 21 d for ingrowth of ^{222}Rn.

9.2.13. When all samples have been de-emanated, close the helium control valve and the helium tank valve.

9.3. De-emanation.

9.3.1. Prepare fresh drying tubes (see Fig. 1).

9.3.1.1. File off the narrow tip of a Pasteur pipette.

9.3.1.2. Pack a small amount of glass wool into the tip of the tube.

9.3.1.3. Fill the lower half of the tube with ascarite and the upper half of the tube with magnesium perchlorate.

9.3.1.4. Place a small amount of glass wool into the top of the tube.

9.3.2. Select a scintillation cell (see Fig. 3). Connect the cell and the bubbler to the de-emanation stand as shown in Fig. 2. Place a cap on the window of the cell to prevent the activation of zinc sulfide by light.

9.3.3. Turn on the vacuum pump.

9.3.4. Open the helium valve on the tank.

9.3.5. Open the stopcock on the cell and alternate helium and vacuum several times to flush the line between the cell and the bubbler.

9.3.6. Leave vacuum on and check for leaks.

9.3.6.1. The mercury column should hold pressure without dropping while the vacuum is turned on.

9.3.6.2. Turn the vacuum valve to the **off** position. The mercury column should continue to hold pressure.

9.3.6.3. Turn the vacuum pump off. The mercury column should continue to hold pressure, indicating the absence of leaks.

9.3.7. Carefully open the upper stopcock on the bubbler.

NOTE: Open the upper stopcock slowly, so that liquid will not rise into the stopcock.

9.3.8. Gradually open the lower stopcock on the bubbler attached to the helium line.

9.3.9. Gradually open the helium control valve attached to the stand until helium is bubbling through the frit. Adjust the He flow until a steady bubbling rate is obtained.

9.3.10. Observe the mercury column. When the two legs are equal in height (approximately 10-15 min), (1) close the stopcock on the cell, (2) close the two stopcocks on the bubbler, and (3) close the helium control valve. Record the time (see Fig. 5, T_2).

9.3.11. When all samples are complete, close the helium tank valve.

9.4. Radon scintillation counting.

9.4.1. Place the cell in the counting chamber immediately after de-emanation and leave it in the chamber for a minimum of 4 h. This allows the radon daughters to come into equilibrium.

9.4.2. At the end of holding time, record the time on the calculation sheet (see Fig. 5, T_3) and turn on the counter.

9.4.3. Count the sample for 1000 min (overnight).

NOTE: After each analysis, flush the cell three times by evacuation and filling with helium. Store the cell filled with helium at atmospheric pressure. This procedure removes radon from the cell and prevents the buildup of radon daughter products.

9.5. Carefully clean the bubblers between each use. Regrease all stopcocks after each cleaning to minimize leakage.

10. Operation of Equipment

10.1. Instrument description for scintillation cell counting.

10.1.1. The radon counting system is composed of commercially available instrumentation modules. It consists of a 3-in. photomultiplier (PM) tube optically coupled with a 0.5-in. quartz light pipe, PM tube base, scintillation type preamplifier, linear amplifier, and timer/counter. Each of the four systems is powered by a separate high-voltage power supply.

10.1.2. The photomultiplier tube and base assembly have been modified to fit within a 16.5- by 16.5- by 22.9-cm light-tight aluminum enclosure. The photomultiplier tube housing is also covered by a Mumetal sheet to minimize the interference from magnetic fields generated by any of the counting equipment. Access to the top of the detector is gained by

removing the cylindrical cover on the top of the chamber. The entire assembly is light-tight, minimizing signal response from thermalization.

10.2. For complete operating instructions refer to Method No. CR190, Radium-226 Counting System Operating Procedure, in the EM-9 analytical procedure manual, LA-10300-M.

10.2.1. Remove the cylindrical cover from the detector chamber and carefully place the scintillation cell on the quartz light pipe. Replace the cover before counting.

10.2.2. Set the high voltage to the appropriate level as noted on the high-voltage supply for each counter (the required voltage varies from 1100 to 1450 volts positive).

10.2.3. Set the timer on the timer/counter module for the required 16.7-h counting period. For this model timer/counter, a time of M = 1 and N = 3 minutes should be set (time = 1000 min).

10.2.4. Clear the counter by pressing the **STOP** button and then the **RESET** button on the front panel of the counter.

10.2.5. Initiate the counting sequence by pressing the **COUNT** button next to the **RESET** button.

10.2.6. Record the start count time on the data sheet (see Fig. 5).

10.2.7. After the counting period has ended, record the total number of counts on the data sheet.

10.2.8. Record the date and time that the count was completed on the data sheet (see Fig. 5).

10.2.9. TURN OFF the high-voltage supply before removing the lid to the counter. Exposing a fully biased PM tube to direct light damages the tube and will significantly shorten its lifetime.

11. Calculations

11.1. This section gives calculations of radiometric counting data for determinations made without a radiotracer. Most data values are assumed to have Poisson distributions and all time-measurement errors are assumed to be insignificant. Actual sample calculations are done by the Symphony radium calculation program on the IBM computer in room 180 or by the hand calculation method in 11.4.

11.2. Counting efficiency.

11.2.1. The counting efficiency of the counter for single-background and standard runs is given by

$$E = \frac{\left(\frac{C_s}{T_s} - \overline{B}\right) \times D_c}{A_s \times G \times D_g} ,$$

where E = efficiency (counts per disintegration),
C_s = gross counts for the standard,
T_s = counting time for standard (min),
$\overline{B}$ = average background count rate,
D_c = correction for decay during counting,
A_s = activity of the standard (dpm),
G = correction for daughter growth to equilibrium, and
D_g = decay correction from final separation until start of count.

11.2.2. The average counter efficiency is calculated from a running average of the last n values of individual E determinations.

$$\overline{E} = \frac{\sum_{(i=1)}^{n} E_i}{n} ,$$

where $\overline{E}$ = the running average of the counting efficiency,
n = the number of measurements used for calculation, and
E_i = the individual counting efficiencies.

11.2.3. Standard deviation of $\overline{E}$.

$$SD(\overline{E}) = \overline{E} \times \sqrt{\frac{\sum_{i=1}^{n} (E_i - \overline{E})^2}{(n-1)\, n\, \overline{E}^2} + \frac{(\sigma_{A_s})^2}{A_s^2}} ,$$

where $SD(\overline{E})$ = standard deviation of the average efficiency,
$\overline{E}$ = average efficiency (counts per disintegration) from 11.2.2,
E_i = individual efficiencies from 11.2.1,

n = number of values of E used,
A_s = activity of the standard (dpm), and
σ_{A_s} = stated standard deviation associated with the known value of A_s.

11.3. Background.

11.3.1. Background count rate for each cell is

$$B = \frac{C_b}{T_b} ,$$

where B = background count rate (cpm),
C_b = gross counts for the background, and
T_b = counting time for the background (min).

11.3.2. A running average of the background count rate is calculated by

$$\overline{B} = \frac{\sum_{i=1}^{n} B_i}{n} ,$$

where $\overline{B}$ = average background count rate,
B_i = individual background count rates, and
n = number of values used.

11.3.3. The standard deviation of the average background count rate is calculated by

$$SD(\overline{B}) = \sqrt{\frac{\sum_{(i=1)}^{n} (B_i - \overline{B})^2}{(n-1) \times n \times \overline{B}^2}} ,$$

where $SD(\overline{B})$ = standard deviation of the running average of the background,
$\overline{B}$ = average background,
B_i = individual background count rates, and
n = number of values used.

11.4. Sample activity.

11.4.1. The activity in the sample is given by

$$A_x = \frac{\left(\frac{C_x}{T_x} - \overline{B}\right)}{\overline{E}} ,$$

where A_x = sample activity (dpm),
C_x = gross counts for the sample,
T_x = counting time for the sample (min),
$\overline{B}$ = average background count rate (cpm), and
$\overline{E}$ = average counting efficiency.

11.4.2. The standard deviation of the activity in the sample is given by

$$SD(A_x) = |A_x| \sqrt{\frac{\frac{C_x}{T_x^2} + SD(\overline{B})^2}{\left(\frac{C_x}{T_x} - \overline{B}\right)^2}} ,$$

where $SD(A_x)$ = standard deviation of sample activity (dpm),
$|A_x|$ = absolute value of sample activity,
C_x = gross counts for the sample,
T_x = sample counting time,
$\overline{B}$ = background count rate, and
$SD(\overline{B})$ = standard deviation of the average background count rate.

11.4.3. The minimum detectable activity for low-background instruments is calculated by

$$MDA = \frac{4.6 \times SD(B) + 3}{K \times T_b} ,$$

where MDA = minimum detectable activity (dpm),
SD(B) = standard deviation of the background count rate,
K = constant in sample units, and
T_b = counting time for the background.

11.5. Growth and decay times.

11.5.1. Use the calculation sheet (Fig. 5).

11.5.2. Record the first de-emanation time, T_1.

11.5.3. Record the second de-emanation time, T_2.

11.5.4. Calculate the radon daughter growth:

$$C_g = 1 - e^{-\ln 2\,(T_2 - T_1)/T_{1/2}} ,$$

where C_g = the growth correction factor,
$T1/2$ = the half-life of ^{222}Rn (3.825 d),
T_2 = second de-emanation time in d, and
T_1 = first de-emanation time in d.

11.5.5. Record the count start time plus one-half the count time, T_3.

11.5.6. Correct for the radon decay after the last separation:

$$C_d = e^{-\ln 2(T_3 - T_2)/T_{1/2}} ,$$

where C_d = the radon decay correction factor after the second de-emanation,
$T_{1/2}$ = the half-life of ^{222}Rn 3.825 d,
T_2 = second de-emanation time in d, and
T_3 = midtime of the counting time in d.

11.5.7. Correct for the radon decay and daughter growth during counting:

$$C_c = \frac{\frac{\ln 2}{T_{1/2}} \times T_c}{1 - e^{-\ln 2 \times T_c/T_{1/2}}} ,$$

where C_c = the radon decay during counting,
T_c = count time in d, and
$T_{1/2}$ = the half-life of ^{222}Rn (3.825 d).

11.6. Calculation for converting counting results to proper units for reporting.

11.6.1. Reported sample activity.

$$ACT_x = \frac{A_x \times C_c}{C_d \times C_g \times Q \times 2.22} ,$$

where ACT_x = sample activity in reporting units,
A_x = calculated activity (dpm),
C_c = radon decay during counting,
C_d = radon decay after second de-emanation,
C_g = growth of radon after first de-emanation,
Q = sample aliquot in reporting units, and
2.22 = constant.

11.6.2. Uncertainty of reported sample activity.

$$U_x = |ACT_x| \times \sqrt{SD(A_x)^2 + SD(\bar{E})^2 + SD(Q)^2} ,$$

where U_x = standard deviation of the reported sample activity,
ACT_x = reported sample activity,
$SD(A_x)$ = standard deviation of sample activity,
$SD(\bar{E})$ = standard deviation of average efficiency, and
$SD(Q)$ = standard deviation of sample quantity measurement.

12. Proper Waste Disposal Practices

12.1. Discard the filtrate from Step 9.1.6 into the acid waste system.

12.2. Discard the solution from Step 9.5 into the acid waste system.

13. Source Materials

13.1. D. E. Rushing, "The Analysis of Effluents and Environmental Samples from Uranium Mills and of Biological Samples for Uranium, Radium, and Polonium," United States Department of Health, Education and Welfare, Division of Water Supply and Pollution Control, Colorado River Basin Water Quality Control Project Laboratory, report no. SM-41-44 (1963).

13.2. E. S. Gladney, W. Eberhardt, and R. J. Peters, "Determination of Ra-226 in CCRMP Reference Samples by Independent Nuclear Methods," *Geostandards Newsletter* **6**, 5-6 (1982).

13.3. M. A. Gautier, E. S. Gladney, and B. T. O'Malley, "Quality Assurance for Health and Environmental Chemistry: 1985," Los Alamos National Laboratory report LA-10813-MS (1986).

13.4. "American National Standard for Performance Criteria for Radiobioassay," draft, American National Standards Institute, ANSI N13.30 (1989).

13.5. L. A. Currie, "Limits for Qualitative Detection and Quantitative Determination," *Anal. Chem.* **40**, 586-593 (1968).

13.6. "Chemical, Hazardous, and Mixed Waste," Administrative Requirement 10-3, in *Environment, Safety, and Health Manual*, Los Alamos National Laboratory Manual, Chapter 1 (most recent edition).

Revisions or additions to the procedure are marked (▒▒▒). Where a section heading is marked, the entire section has been revised.

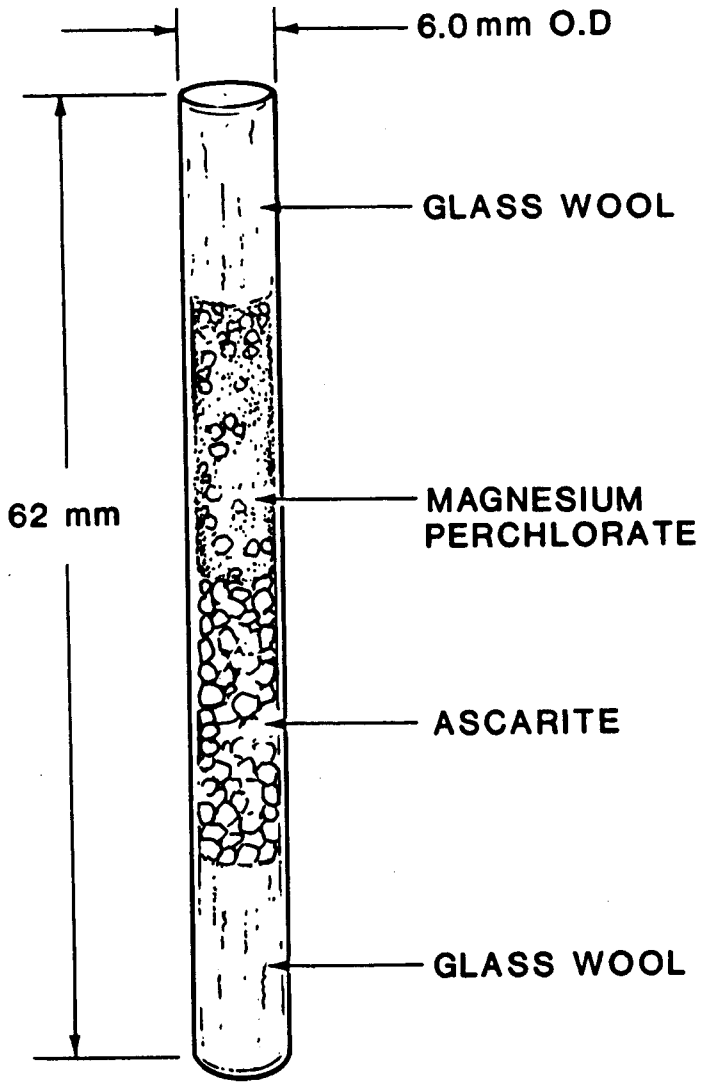

Fig. 1. Drying tube.

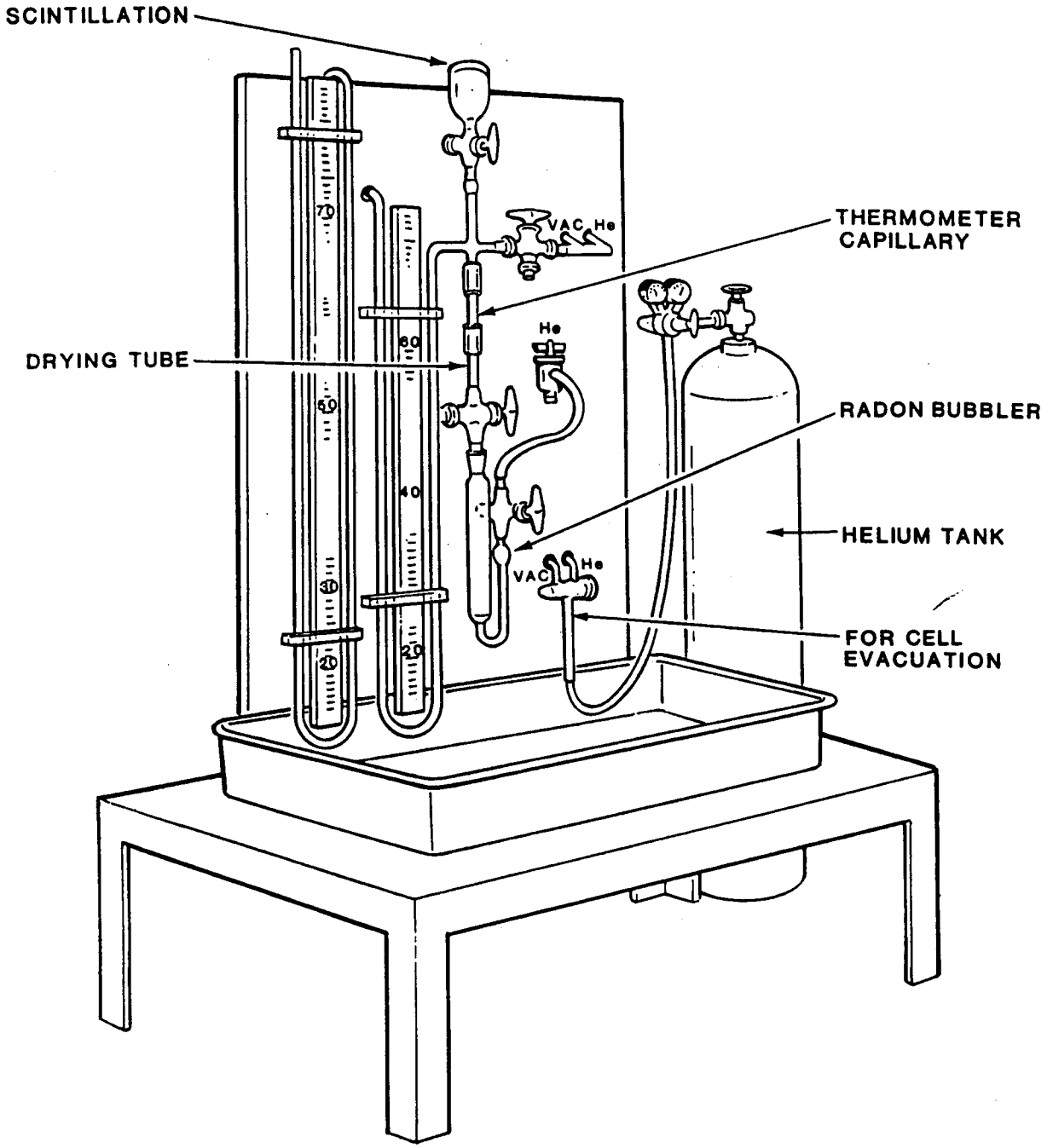

Fig. 2. Radon emanation apparatus.

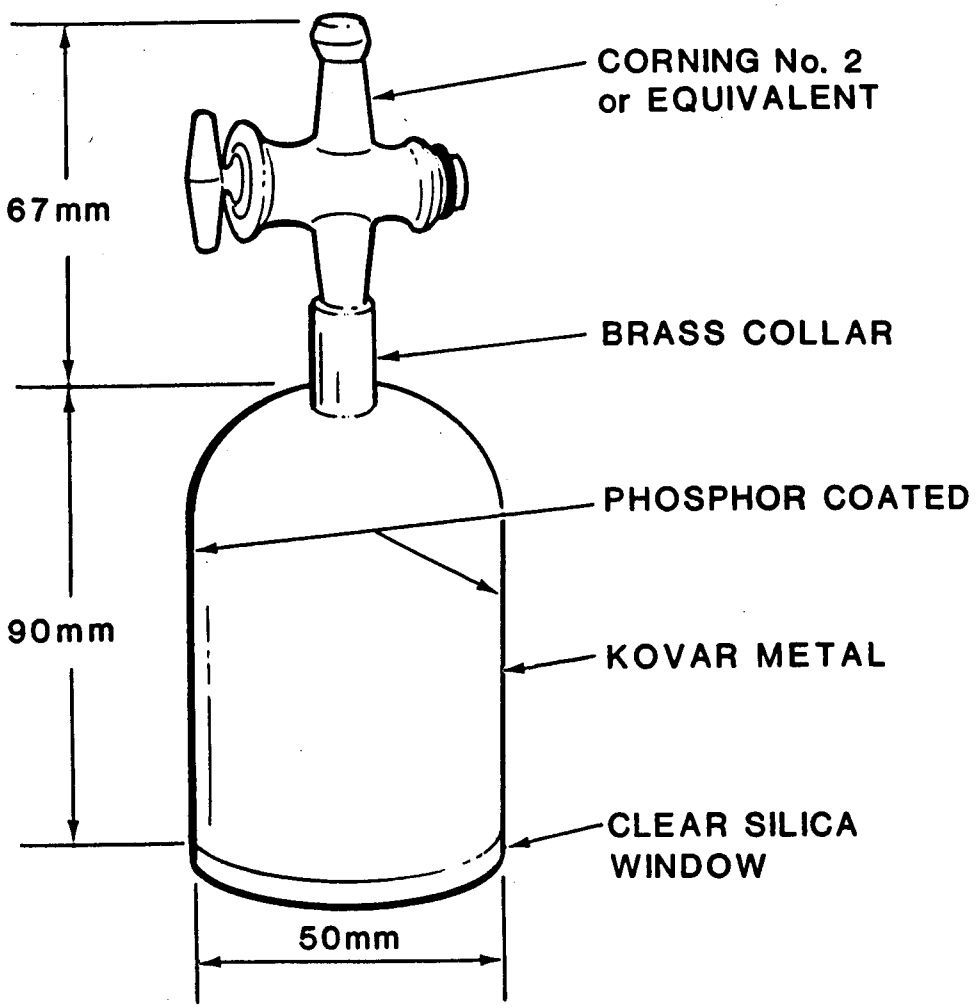

Fig. 3. Scintillation cell for radon counting.

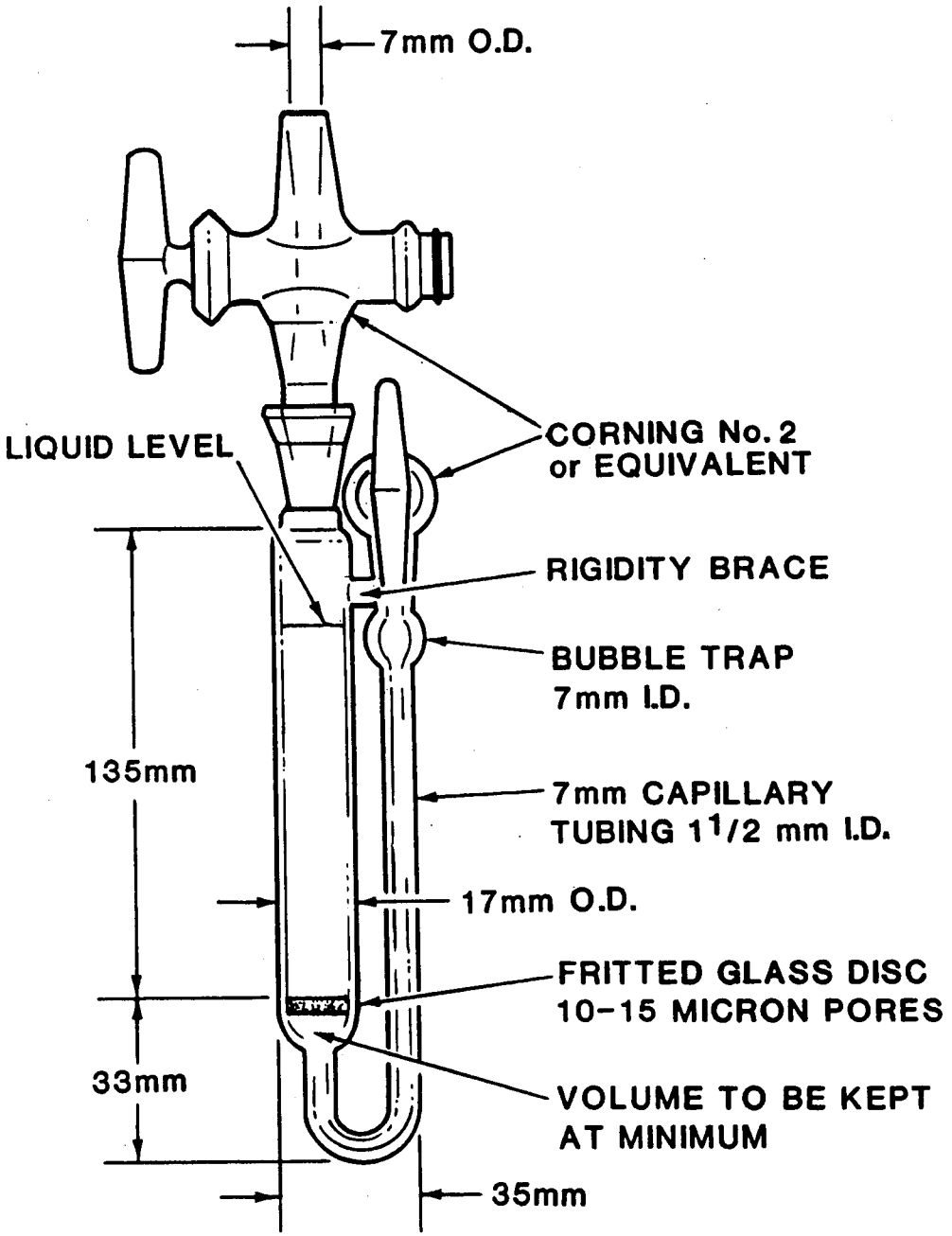

Fig. 4. Radon bubbler.

RADIUM-226 CALCULATION SHEET

Request Number _____ Date _____

Owner _____ Technician _____

	Detector Number			
	1	2	3	4
Sample No.				
Aliquot (A)				
Cell No.				
Cell Bkg.(B)				
Cell Eff.(E)				
First Deemanation(T_1) Date (Julian)				
Time (2400 Clock)				
Second Deemanation(T_2) Date (Julian)				
Time (2400 Clock)				
Radon Ingrowth Factor(G)				
Count Times (T_3) Start Date (Julian)				
Start Time (2400 Clock)				
Count Time (minutes)(T)				
Decay Factor (T_2 to T_3)(D_f)				
Decay during count (D_c)				
Total Counts (C)				
Activity (pCi/aliquot)				

$$\text{Activity (pCi)} = \frac{\left[\frac{C}{T} - B\right] \times D_c}{E \times 2.22 \times G \times D_f \times A}$$

Fig. 5. Radium calculation sheet.

STRONTIUM-90 IN ENVIRONMENTAL MATRICES

Analyte: Strontium-90	**Method No.:** ER190
Matrix: Biologicals, soils, air filters, and waters	**Lower Limit of Detection:** 2.0 pCi/sample
Procedure: Beta counting of ^{90}Y	**Accuracy and Precision:** 99% ± 10%
Effective Date: 09/15/89	**Authors:** Bob B. Bates Richard J. Peters Daryl Knab

SAFETY NOTE: Before beginning this procedure, read all of the Material Safety Data Sheets for the chemicals listed in Sec. 7. Read Sec. 4.3 of the EM-9 Safety Manual for information on personal protective clothing and equipment. Read Sec. 12 of this procedure and Source Material 13.9 for proper waste disposal practices.

1. Principle of Method

1.1. Yttrium-90, the daughter product of ^{90}Sr decay, is removed from the sample by solvent extraction with bis(2-ethylhexyl) hydrogen phosphate (B_2EHHP).

1.2. After an ingrowth period, ^{90}Y is again extracted in B_2EHHP, back-extracted into an aqueous phase, precipitated as an oxalate, and beta counted.

2. Sensitivity

2.1. Detection limits of 2.0 pCi/sample can be achieved. This translates into the following detection limits for our standard sample sizes:

1 pCi/g in soils (2.0-g aliquot),

0.2 pCi/g in biologicals (10-g vegetation ash or 10-g soft tissue aliquot), and

3.0 pCi/L in water (500-mL aliquot).

2.2 Lower limit of detection.

$$L_D = \frac{3 \times \sqrt{C_B}}{T_B \times 2.22 \times E \times Q \times R \times D \times G},$$

where L_D = "a priori" lower limit of detection,
C_B = counts for the blank sample,
T_b = time of the blank count,
2.22 = factor to convert dis/min to pCi,
E = counting efficiency,
Q = sample size (g or L),
R = fractional radiochemical yield for Y carrier,
D = correction for ^{90}Y decay before counting, and
G = correction for ^{90}Y growth after the first separation.

3. Accuracy and Precision

3.1. Water samples are spiked with known quantities of National Institute of Standards and Technology (NIST) Standard Reference Material (SRM) 4919-D ($^{90}Sr/^{90}Y$) and are periodically run through the entire chemical procedure.

3.2. There are no NIST SRMs for ^{90}Sr in water, biologicals, or air filters. NIST has several soil materials characterized for ^{90}Sr, but the concentrations are at fallout levels. The Environmental Protection Agency (EPA) circulates SRMs for ^{90}Sr in water, air filters, and foodstuffs as part of their radioactivity quality check program. The DOE Environmental Measurements Laboratory provides ^{90}Sr at elevated levels on all four matrices twice a year as part of their quality assurance program. Over a period of 2 years the determination of ^{90}Sr in these reference materials exhibited the following mean recoveries:

Matrix	Mean ± std dev	(n)
Biological	1.01 ± 0.23	33
Filters	1.02 ± 0.0	2
Soils	1.01 ± 0.18	18
Waters	0.93 ± 0.17	43

4. Interferences

4.1. Any beta-emitting nuclide is a potential interference.

5. Collection and Storage of Samples

5.1. No special precautions are required for soils, biologicals, and air filters. Filter and acidify water samples upon collection.

6. Apparatus

6.1. Separatory funnels: 250- or 125-mL, glass, with stopper.

6.2. Centrifuge.

6.3. Centrifuge tubes: 50-mL, glass.

6.4. Filter paper: Whatman No. 42 (7.0-cm) and No. 542 (2.4-cm).

6.5. Crucibles: Coors "0" size.

6.6. Millipore filtering apparatus: for 2.4-cm filters.

6.7. Nylon planchet: 1-in., with 6.8 Mylar covering to fit nylon planchet.

6.8. Tennelec low-beta counter: Model No. LB-4000.

6.9. Hot plate: with magnetic stirring capability, Corning Model No. PC-351.

6.10. Magnetic stirring bars.

6.11. Muffle furnace.

6.12. Platinum crucibles: 30-mL, with cover.

6.13. Analytical balance: with weights to 0.1 mg.

6.14. Drying oven.

6.15. Desiccator.

6.16. Beakers: 250-, 600-, and 1000-mL, Pyrex.

6.17. Beakers: 200-mL, Teflon.

6.18. Graduated cylinders: 10-, 100-, and 500-mL (use plastic when measuring HF).

6.19. Flasks: 500-mL, volumetric.

7. Reagents

7.1. B_2EHHP (20%). Dissolve 200 mL of bis(2-ethylhexyl) hydrogen phosphate in 800 mL of dodecane. Work in a fume hood. Store in glass.

7.2. B_2EHHP (5%). Dissolve 50 mL of bis(2-ethylhexyl) hydrogen phosphate in 950 mL of dodecane. Work in a fume hood. Store in glass.

7.3. Yttrium carrier (24 mg of Y_2O_3/mL). Dry Y_2O_3 at 100°C overnight. Cool and weigh 12.0 g into a 500-mL volumetric flask. Dissolve in approximately 26 mL of HCl. Dilute to 500-mL with distilled water, and allow to stand overnight. Calibrate according to Step 8.3.

7.4. Hydrochloric acid (concentrated, reagent-grade).

7.5. Hydrochloric acid (2 M). Add 166 mL of concentrated HCl to 834 mL of distilled water.

7.6. Hydrochloric acid (0.08 M). Dilute 6.7 mL of concentrated HCl to 1 L with distilled water.

7.7. Ammonium hydroxide (concentrated, reagent-grade).

7.8. Ammonium hydroxide (6 M). Add 396 mL of concentrated NH_4OH to 604 mL of distilled water.

7.9. Nitric acid (concentrated, reagent-grade).

7.10. Nitric acid (3 M). Add 192 mL of concentrated HNO_3 to 808 mL of distilled water.

7.11. Ammonium oxalate solution (saturated). Add 50 g of ammonium oxalate to 1000 mL of distilled water.

7.12. Hydrogen peroxide (30%).

7.13. Hydrofluoric acid (concentrated, reagent-grade).

7.14. Boric acid, dry salt.

7.15. Boric acid solution (saturated).

8. Calibration and Standards

8.1. A New England Nuclear Pa-234m standard, 0.0164 μCi, February 1972, has been used for a calibration check of the Tennelec LB-4000 low-beta counter. The standard is counted for 2 min each week whenever the counter is to be used.

8.2. Background counts of 200 min are taken every day the counter is in use.

8.3. Standardization of yttrium carrier.

8.3.1. Yttrium carrier should be calibrated monthly and/or at the time a new carrier solution is made.

8.3.2. Add 25 mL of 3 M HNO_3 and 1 mL of yttrium carrier to four 50-mL centrifuge tubes.

8.3.3. Add 10 mL of concentrated NH_4OH to precipitate the yttrium as a hydroxide.

8.3.4. Centrifuge for 5 min and discard the supernate.

8.3.5. Dissolve the precipitate in 5 mL of 2 M HCl. Allow time for complete dissolution.

8.3.6. Add 20 mL of distilled water and adjust the pH to between 1.4 and 1.7 (approximately 10 drops of concentrated NH_4OH).

8.3.7. Heat the samples in a hot water bath for at least 10 min. Add 2 mL of saturated ammonium oxalate. A precipitate should form.

8.3.8. Cool the samples and filter through tared 2.4-cm Whatman No. 542 filters. Using wash bottles, wash the sample with a minimum of distilled water and then alcohol.

8.3.9. Remove the samples from the filter tower, and place in a preheated drying oven. Dry the samples at ~80°C for 30 min. Cool the samples for 20 min. Place the filters on an analytical balance and obtain the gross weight of the filter and precipitate. Record the weight.

8.3.10. Calculation. Calculate the average net weight ($\overline{X}$) of yttrium carrier using the table below.

Filter No.	Tare Wt.	Gross Wt.	Net Wt.	
1 _____	_____	_____	_____	
2 _____	_____	_____	_____	
3 _____	_____	_____	_____	
4 _____	_____	_____	_____	
		$\overline{X}$ =	_____	mg of yttrium carrier

9. Procedure

9.1. Begin using the ^{90}Sr data sheet (Fig. 1) as soon as sample analysis begins. Keep the data sheet up to date throughout the entire procedure; accurate times are necessary for the calculations.

9.2. Sample dissolution.

9.2.1. Soil dissolution.

9.2.1.1. Weigh a 2-g aliquot of a dry soil sample into a 200-mL Teflon beaker.

9.2.1.2. **CAUTIOUSLY** add approximately 100 mL of concentrated HNO_3. Carbonate soils can react vigorously. Add 100 mL of 48% HF.

CAUTION: HF is extremely hazardous. Refer to SOP 11, Handling Hydrofluoric Acid, for the detailed safety policy. Wear rubber gloves, eye protection, and a lab coat. Completely clean up all spills and wash thoroughly after using HF. Make all HF transfers in an exhaust fume hood to avoid toxic fumes.

9.2.1.3. Boil the mixture to dryness.

9.2.1.4. Add 10 mL of concentrated HNO_3. **CAUTIOUSLY** add 30% H_2O_2 a few drops at a time from a squeeze bottle to oxidize any organic residues.

9.2.1.5. Evaporate the solution until the first salts appear. Repeat Step 9.2.1.4 until the solution is light yellow and clear.

9.2.1.6. Add 5 mL of HCl. Add 1 g of H_3BO_3 if any HF was used.

9.2.1.7. Evaporate the solution until the first salts appear. Add 5 mL of 2 M HCl.

9.2.1.8. Evaporate the solution until the first salts appear. Dilute to 25 mL with distilled water. Cover the beaker with plastic wrap until ready for solvent extraction.

9.2.2. Water samples.

9.2.2.1. Measure a 500-mL aliquot of the water sample into a 1-L Pyrex beaker.

9.2.2.2. Add 10 mL of concentrated HNO_3 and evaporate the solution to approximately 10 mL.

NOTE: A 1-L beaker on a Corning Model No. PC-351 hot plate set at "2" can be left unattended for 15 h (overnight).

9.2.2.3. Add 10 mL of concentrated HNO_3 and heat to boiling. When the sample begins steaming, **CAREFULLY** add 6 drops of 48% HF while swirling the sample. Evaporate until the first dry spots appear.

9.2.2.4. Carefully wash down the sides of the beaker with approximately 10 mL of concentrated HNO_3.

9.2.2.5. While heating the sample, add 30% H_2O_2 by drops to decompose any organic material. Repeated additions of concentrated HNO_3 and H_2O_2 may be required to completely ash some samples. The wet ashing is complete when the residue is white or very light yellow, and dry.

9.2.2.6. Continue with Steps 9.2.1.5 to 9.2.1.8.

9.2.3. Vegetation dissolution.

9.2.3.1. Dry-ash the dried vegetation sample in a porcelain crucible at 300°C for 12 h in an ashing oven.

9.2.3.2. Raise the temperature to 500°C for 12 h or until the ash is white. Remove the sample from the oven and cool.

9.2.3.3. Weigh a 10-g sample of the ash into a 200-mL Teflon beaker. Continue with Steps 9.2.1.2 to 9.2.1.8.

9.2.4. Tissue dissolution (including bone).

9.2.4.1. Weigh a 10-g aliquot of wet soft tissue or bone, excluding feathers or hide, into a 600-mL glass beaker.

9.2.4.2. Wet-ash with concentrated HNO_3 and 30% H_2O_2 until a clear or light yellow solution is obtained. Do not use HF.

9.2.4.3. Evaporate the solution until just dry.

9.2.4.4. Continue with Steps 9.2.1.6 to 9.2.1.8.

9.2.5. Air particulate filter dissolution.

9.2.5.1. Place the air particulate filter in a 30-mL platinum crucible.

9.2.5.2. Record the crucible and sample number.

9.2.5.3. Place the crucible in a cold muffle furnace. Turn the furnace to 500°C and dry ash for 4 h. Turn off the furnace. Remove the crucible and allow to cool for 1/2 h.

9.2.5.4. Add 5-10 mL of concentrated HF a few drops at a time to start. Cover with a platinum lid and let stand overnight.

NOTE: If glass fiber filters are used, ashing will not be complete.

9.2.5.5. Evaporate to dryness on medium heat.

9.2.5.6. Repeat the addition of HF followed by evaporation. Allow the sample to cool.

9.2.5.7. Carefully wash down the cover and sides of the crucible with approximately 5 mL of concentrated HNO_3.

9.2.5.8. **CAUTIOUSLY** add 1-2 drops of 30% H_2O_2 to the crucible. When the vigorous reaction subsides, repeat the addition of H_2O_2 until the solution is clear or straw-colored.

9.2.5.9. Evaporate the solution to approximately 1 mL.

9.2.5.10. Add 2 mL of saturated H_3BO_3 solution. Heat to dissolve the sample.

9.2.5.11. Transfer the solution to a 250-mL beaker with approximately 10 mL of concentrated HCl. Continue with Steps 9.2.1.7 to 9.2.1.8.

9.3. First extraction procedure.

9.3.1. Adjust the pH of the sample to approximately 1.4, determined by short-range pH paper, using 6 M NH_4OH or 2 M HCl. Transfer the sample to a separatory funnel.

9.3.2. Add 25 mL of 20% B_2EHHP solution to the sample and shake for 2 min.

9.3.3. **Record the extraction time (T_1)** for later use in the calculations. Allow the phases to separate for at least 10 min.

9.3.4. Drain the aqueous (bottom) phase into the original beaker. Discard the organic (top) phase.

9.3.5. Add an additional 25 mL of 20% B_2EHHP to the sample. Pour the sample into the separatory funnel, shake for 2 min, and allow the phases to separate for at least 10 min. Drain and discard the organic phase.

9.3.6. Drain the aqueous (bottom) phase into a clean 250-mL glass beaker. Adjust the pH to approximately 1.4 and add 1.0 mL of ytrrium carrier.

9.3.7. Cover the beaker with plastic wrap and store the sample for at least 2 weeks to await ^{90}Y ingrowth.

9.4. Second extraction procedure.

9.4.1. If necessary, adjust the pH of the sample to approximately 1.4 using 6 M NH_4OH or 2 M HCl.

9.4.2. Add 25 mL of 5% B_2EHHP to the sample. Transfer to a separatory funnel and shake for 2 min.

9.4.3. Allow the phases to separate for at least 10 min. **Record the extraction time (T_2)** for later use in the calculations.

9.4.4. Drain the aqueous (bottom) phase into the original beaker and discard.

9.4.5. Add 25 mL of 0.08 M HCl to the organic phase in the separatory funnel. Shake for 1 min. Allow the phases to separate for at least 10 min. Drain the aqueous (bottom) phase and discard.

9.4.6. Add 25 mL of 3 M HNO_3 to the organic phase and shake for 2 min to extract the ^{90}Y. Allow the phases to separate for at least 10 min.

9.4.7. Drain the aqueous (bottom) phase into a 50-mL centrifuge tube. Add 10 mL of concentrated NH_4OH to precipitate the yttrium as a hydroxide.

9.4.8. Centrifuge the sample for 5 min and discard the supernate.

9.4.9. Dissolve the precipitate in 5 mL of 2 M HCl. Add 20 mL of distilled water. Adjust the pH between 1.4 and 1.7 for uniform hydrate precipitation (approximately 10 drops of concentrated NH_4OH).

NOTE: If a precipitate is present, filter the sample through Whatman No. 42 filter paper into a clean test tube and rinse with 0.08 M HCl.

9.4.10. Heat the sample in a hot water bath for 20 min. Add 2 mL of saturated ammonium oxalate to precipitate the yttrium as an oxalate.

9.4.11. Cool the sample and filter onto tared 2.4-cm Whatman No. 542 filters.

9.4.11.1. Wash the precipitate with a small amount of distilled water and followed by a small amount of alcohol.

9.4.11.2. While maintaining the vacuum, remove the chimney and air dry for 2 min to prevent curling of the filter paper.

9.4.12. Dry the samples in a drying oven for 20 min at approximately 80°C. Cool the samples for 20 min. Weigh the filter on an analytical balance to obtain the gross weight of the oxalate.

9.4.13. Mount the sample on a 1-in. nylon planchet with a Mylar covering.

9.4.14. Count the sample in a gas-flow proportional beta counter for 200 min (see Section 10).

9.4.15. **Record the midtime of counting (T_3)** for later use in the calculations.

9.4.16. Count the samples on the same day as they are precipitated for a minimum of ^{90}Y decay.

10. Counting Protocol for Strontium-90 Samples

10.1. Samples are to be counted within 24 h of the time they were precipitated to lessen the degree of ^{90}Y decay.

NOTE: Samples should not be counted within the first 7 h after the final extraction (T-2) to allow short-lived beta emitters to decay.

10.2. Samples are loaded into the Tennelec LB-4000 four at a time and counted for 200 min.

10.3. If sample activity is twice that of the background, the samples should be recounted 12 - 72 h later for an additional 200 min. Repeat once more if sample counts are again more than twice the background. This checks for contamination in the sample.

10.4. Instrument QA/QC requirements.

10.4.1. Each weekday, run a 200-min background count.

10.4.2. Check instrument efficiency at the beginning of each work week.

10.5. Verify the instrument settings for the Tennelec LB-4000.

- Timer: 200 min.
- HV switches: set at 1350 V. HV is software controlled and should not be applied through the potentiometer on the front of the HV module.
- Power: ON.
- Flow rate of P-10 gas: set between 0.1 and 0.2.

Press the F1 key to start the counters.

10.6. Refer to the Tennelec LB-4000 manual and to count room Method No. CR230 for detailed counting instructions.

11. Calculations

The following calculations of radiometric counting data are performed for determinations made without a radiotracer. Most data values are assumed to have Poisson distributions and all time-measurement errors are assumed to be insignificant.

11.1. Counting efficiency is a function of self absorption of the beta particles in the precipitated sample. A series of 24 Sr-90 samples is prepared with varying amounts of yttrium carrier. The calculated efficiency of the mounted samples is plotted against the mass of the precipitate to construct an efficiency curve as a function of yttrium recovery. A least-squares equation is calculated from the plotted data.

11.1.1. The counting efficiency of the counter for a single background and standard is given by

$$E = \frac{\left(\frac{C_s}{T_s} - B\right)}{A_s \times K} ,$$

where E = efficiency (counts per disintegration),
C_s = gross counts for the standards,
T_s = counting time for standard (min),
B = background count rate (counts/min),
A_s = activity of the standard (dis/min), and
K = the ^{90}Y growth factor times the ^{90}Y decay factor times the Y recovery.

11.1.2. Average efficiency.

$$\overline{E} = \frac{\sum_{i=1}^{n} E_i}{n} ,$$

where $\overline{E}$ = average efficiency,
E_i = individual efficiencies, and
n = number of E_i values.

11.1.3. The standard deviation of $\overline{E}$ is

$$SD(\overline{E}) = \sqrt{\frac{\sum_{i=1}^{n} (E_i - \overline{E})^2}{(n-1)n\overline{E}^2} + \frac{SD(A_S)^2}{(A_S)^2}} ,$$

where $SD(\overline{E})$ = standard deviation of $\overline{E}$ (counts per disintegration),
E_i = counting efficiency,
$\overline{E}$ = average efficiency,
n = number of values used for the efficiency calculation,
A_S = activity of the added standard, and
$SD(A_s)$ = standard deviation of the standard solution activity.

11.2. Background.

11.2.1. The background count rate is

$$B = \frac{C_b}{T_b} ,$$

where B = background count rate (counts/min),
C_b = gross counts for the background, and
T_b = counting time for the background (min).

11.2.2. The standard deviation for the background count rate is calculated by

$$SD\ (B) = \frac{\sqrt{C_b}}{C_b} ,$$

where $SD(B)$ = standard deviation of the background and
C_b = individual background count.

11.3. Sample activity.

11.3.1. The activity of the samples is given by

$$A_x = \frac{\left(\frac{C_x}{T_x} - B\right)}{\overline{E}} ,$$

where A_x = sample activity (dis/min),
C_x = gross counts for the sample,
T_x = counting time for the sample (min),
B = background count rate (counts/min), and
$\overline{E}$ = average counting efficiency.

11.3.2. The standard deviation of the activity of the sample is given by

$$SD\ (A_x) = \frac{\sqrt{C_x}}{C_x} ,$$

where $SD(A_x)$ = standard deviation of sample activity (dis/min) and
C_x = gross counts for the sample,

11.3.3. The lower limit of detection of the activity for high-background instruments is determined to be three times the standard deviation of the background.

$$L_D = \frac{3 \times SD(B)}{K \times T_B} ,$$

where L_D = lower limit of detection,
$SD(B)$ = standard deviation of the background count,
K = constant in sample units corrected for growth and decay, and
T_B = time of the background count.

11.4. Calculation to put the radiometric measurement into the required form for final reporting.

11.4.1. Reported activity.

$$ACT_x = \frac{A_x}{K \times Q \times Y \times D \times G} ,$$

where ACT_x = sample activity in correct units for reporting (usually pCi/L or pCi/g),

A_x = sample activity (dis/min),
K = conversion factor (2.22 pCi per dis/min),
Q = sample quantity analyzed (0.005 L),
Y = yttrium carrier recovery,
D = ^{90}Y decay, and
G = ^{90}Y ingrowth.

11.4.1.1. The ^{90}Y decay is given by

$$D = e^{-\ln 2 (T_3 - T_2) / T_{1/2}} ,$$

where T_3 = midpoint of count time in days,
T_2 = second separation time in days, and
$T_{1/2}$ = half-life of ^{90}Y (days).

11.4.1.2. The ^{90}Y ingrowth is given by

$$G = 1 - e^{-\ln 2 (T_2 - T_1) / T_{1/2}} ,$$

where T_2 = second separation time in days,
T_1 = first separaton time in days, and
$T_{1/2}$ = half-life of ^{90}Y (days).

11.4.2. The propagated uncertainty of the reported activity is

$$U_x = |ACT_x| \times \sqrt{SD(A_x)^2 + SD(E)^2 + SD(Q)^2 + SD(R)^2 + SD(B)^2} ,$$

where U_x = propagated uncertainty of the reported activity,
ACT_x = reported activity;
$SD(A_x)$ = standard deviation of sample activity,
SD(B) = standard deviation of the background,
SD(E) = standard deviation of the efficiency,
SD(Q) = standard deviation of the sample quantity, and
SD(Y) = standard deviation of the yttrium carrier recovery.

11.5. Computer listing. The actual data calculations are calculated by a FORTRAN program within the VAX computer.

12. Proper Waste Disposal Practices

12.1. Liquid waste.

12.1.1. Collect the dodecane-HDEHP solution from Step 9.3.4 and 9.4.7 in a loosely sealed glass bottle, labeled as organic waste.

12.1.2. Discard the acid solution from Step 9.4.4 into the acid waste system.

12.1.3. Discard the supernate from Step 9.4.8 into the acid waste system.

12.1.4. Discard the filtrate from Step 9.4.11.2 into the acid waste system.

12.2. Discard the mounted ^{90}Y sample in the normal waste after two weeks.

12.3. Waste pickup.

12.3.1. Fill out the Waste Profile Request form and send it to EM-7.

12.3.2. Give the approved Waste Profile Request form and waste container to the EM-9 waste coordinator.

12.3.3. The Waste Management Group, EM-7, picks up the waste for disposal in accordance with Laboratory policy in AR 10-3.

13. Source Materials

13.1. *EML Procedures Manual*, 26th ed., H. L. Volchok and G. de Planque, Eds. (Environmental Measurements Laboratory, US Department of Energy, New York, N. Y., HASL-300, 1986).

13.2. M. A. Gautier, E. S. Gladney, and B. T. O'Malley, "Quality Assurance for Health and Environmental Chemistry: 1985," Los Alamos National Laboratory report LA-10813-MS (1986).

13.3. "Prescribed Procedures for Measurement of Radioactivity in Drinking Water," US Environmental Protection Agency, EPA 600-4-80-032, pp. 58-74 (August 1980).

13.4. American Public Health Association, American Waterworks Association, and Water Pollution Control Federation, *Standard Methods for the Examination of Water and Waste Water*, 16th ed. (American Public Health Association, Washington, D.C., 1985).

13.5. Branch Technical Position, Revision I, Regulatory Guide 4.8, Radiological Assessment Branch, Nuclear Regulatory Commission (November 1979).

13.6. "American National Standard for Performance Criteria for Radiobioassay," draft, American National Standards Institute, ANSI N13.30 (1989).

13.7. L. A. Currie, "Limits for Qualitative Detection and Quantitative Determination," *Anal. Chem.* **40**, 586-593 (1968).

13.8. "Standard Methods for the Examination of Water and Waste Water," R. Popper, Ed. (American Public Health Association, 1976).

13.9. "Chemical, Hazardous, and Mixed Waste," Administrative Requirement 10-3, in *Environment, Safety, and Health Manual*, Los Alamos National Laboratory Manual, Chapter 1 (most recent edition).

Revisions or additions to the procedure are marked (▒). Where a section heading is marked the entire section has been revised.

STRONTIUM-90 DATA SHEET

Request No._____ T-1_____(date/time) Y Carrier (mg)_____

Owner_____ T-2_____(date/time)

Matrix_____ Ingrowth Factor_____ Technician_____

Sample No.	Aliq. (g or l)	Eff	Y Carrier Rec		Filters (mg) Gross	Tare	Net	Sample Count	Sample cpm	Blank cpm	T-3 (date/time)	Decay Factor	Count Time(min)	Activity(pCi)
								First						
								Second						
								Third						
								First						
								Second						
								Third						
								First						
								Second						
								Third						
								First						
								Second						
								Third						

Data File _____

Control File _____

Storage Disk No. _____

Log Book Page No._____

Fig. 1. Strontium-90 data sheet

THORIUM-230 IN GEOLOGICALS — ALPHA SPECTROMETRY

Analyte: Thorium-230	**Method No.:** ER200
Matrix: Soils, rocks, sediments, and ores	**Minimum Detectable Concentration:** 0.02 pCi/sample
Procedure: Anion exchange and alpha spectrometry	**Accuracy and Precision:** 100% ± 8% above 10 pCi/g
Effective Date: 01/01/85	**Authors:** Richard J. Peters Ernest S. Gladney

SAFETY NOTE: Before beginning this procedure, read all of the Material Safety Data Sheets for the chemicals listed in Sec. 7. Read Sec. 4.3 of the EM-9 Safety Manual for information on personal protective clothing and equipment.

1. Principle of Method

1.1. Thorium is chemically separated from geological matrices by anion exchange. Separated samples are electroplated and counted by alpha spectrometry.

2. Sensitivity

2.1. Alpha spectrometry detection limits are approximately 0.02 pCi/sample. Detection limits for this procedure are about 0.002 pCi/g using a 10-g sample.

3. Accuracy and Precision

3.1. Performance data for ^{230}Th in geological materials are listed below. No certified values have yet been proposed by the Canadian Certified Reference Materials Project (CCRMP). It is reasonable to assume that ^{230}Th should be near equilibrium with the ^{226}Ra, and this is used as our basis of comparison for establishing the validity of our data.

Reference Material	^{230}Th (pCi/g) EM-9			^{226}Ra (pCi/g) CCRMP Certified		
BL-1	79	±	3	75	±	4
BL-2	1560	±	70	1490	±	30
BL-3	3400	±	200	3330	±	70
BL-4	596	±	14	566	±	12
BL-5	25000	±	2000	23400	±	520
DH-1	430	±	25	578	±	12
DH-1a	660	±	50	859	±	30
DL-1	14.1	±	1.5	13.2	±	0.7
DL-1a	40	±	3	38.2	±	1.1

Reference materials DH-1 and DH-1a are thorium ores and all other materials are uranium ores. It is extremely important to correct the ^{228}Th tracer activity for naturally occurring ^{228}Th. This correction was not done for the data shown above, resulting in underestimation of the ^{230}Th concentrations in the two thorium ores that have substantial levels of ^{228}Th.

4. Interferences

4.1. Radium-224 provides a direct alpha interference with the ^{228}Th tracer peak. Samples should be electroplated as soon after anion exchange as possible and then counted as soon after electroplating as possible to minimize this interference.

4.2. Thorium-228 is formed naturally in the ^{232}Th decay chain. It will cause a positive interference with the tracer peak, resulting in an underestimate of the ^{230}Th content of the sample. It is especially important to measure the natural ^{228}Th content before adding tracer to samples that have high levels of total thorium.

5. Collection and Storage of Samples

5.1. There are no special collection or storage requirements.

6. Apparatus

6.1. Graduated cylinders: 25-, 1000-, and 2000-mL.

6.2. Bottles: 500-mL, polyethylene.

6.3. Stirring bars: 1.5-in., Teflon-coated.

6.4. Beakers: 100-, 250-, and 1000-mL, Pyrex.

6.5. Hot plates: magnetic stirring, Corning Model No. PC-351.

6.6. Beakers: 600-mL, Teflon.

6.7. Transfer pipettes.

6.8. Wash bottles: 16-oz, polyethylene.

6.9. Plastic wrap for covering beakers.

6.10. Ion exchange columns: glass, typically around 197 mm long by 7 mm i.d. with a 100-mL reservoir at the top and a tip tapered to 2 mm i.d. (see Fig. 1).

6.11. Rack for holding several columns.

6.12. Glass wool.

6.13. Fume hood.

6.14. Tongs.

6.15. Filters: glass fiber, Whatman GF/A.

6.16. Crucibles: 30-mL, platinum with covers.

6.17. Electrodeposition apparatus: equipped with a dc power supply to provide up to 500 mA of regulated current to each electrolytic cell.

6.18. Electrolytic cell: glass cell body 2.22-cm-o.d. by 1.9-cm-i.d., 5.2-cm-long. A 2.22-cm-diam stainless steel plate is held in place on one end of the glass cell body by a "rubber band" created by removing approximately 1.5 cm of the closed end of a rubber "finger-cot" and cutting a 0.5-cm hole in it. This is then stretched over the plate and up onto the glass cell body, holding the plate tightly in place with a liquid-tight seal. A platinum electrode of 1.9-cm-diam is press-fitted into the top of the glass cell body.

6.19. Alpha spectrometer: equipped with a 1024 channel analyzer using 300-mm^2 silicon-surface barrier detectors.

6.20. Stainless steel disks: 2.20-cm (7/8-in.) disk fabricated from 15 to 20-mil 316 stainless steel, cold rolled or No. 4 finish. Plating area is 1.59-cm (5/8-in.).

7. Reagents

7.1. Nitric acid (concentrated, reagent-grade).

7.2. Nitric acid (7.2 M). Dilute 2750 mL of concentrated HNO_3 to 6 L with deionized water.

7.3. Methyl alcohol.

7.4. Hydrofluoric acid (concentrated 48%, reagent-grade).

7.5. Hydrochloric acid (concentrated, reagent-grade).

7.6. Hydrochloric acid (8 M). Dilute 333 mL of concentrated HCl to a total volume of 1000 mL with distilled water.

7.7. Hydrochloric acid (0.1 M). Dilute 8 mL of concentrated HCl to a total volume of 1000 mL with distilled water.

7.8. Perchloric acid (concentrated 70%, reagent-grade).

7.9. Hydrogen peroxide (30%).

7.10. Anion exchange resin. AG 1-X8, 50-100 mesh, chloride form, Bio-Rad Laboratories, Richmond, California. Prepare resin for use by soaking the resin with distilled water and storing it in a squeeze bottle.

7.11. Ammonium hydroxide (1%). Dilute 15 mL of concentrated NH_4OH with distilled water to a total volume of 500 mL.

7.12. Ammonium oxalate (4% solution). Dissolve 40 g of ammonium oxalate crystals in 1000 mL of distilled water. This solution is stable for one month.

8. Calibration and Standards

8.1. Calibration of the alpha spectrometer.

8.1.1. The alpha secondary standards contain the isotopes ^{238}Pu, ^{239}Pu, and ^{241}Am and are standardized in a gas-flow proportional counter using the National Bureau of Standards (NBS) Standard Reference Material (SRM) 4906-B17, the ^{238}Pu primary standard.

8.1.2. Calibration counts are made for 1020 s. Determine the efficiency of each detector by integrating the counts in 19 channels (12 channels to the left of the peak and 6 channels to the right of the peak) of the energy spectrum of each of the three isotopes.

8.1.3. Background counts are accumulated for each energy spectrum for each detector for 60,000 s.

8.2. The thorium-230 standard is obtained from the Environmental Protection Agency (EPA). Dilute to 100 dpm.

8.3. The thorium-228 tracer solution is obtained from Amersham. Dilute to 100 dpm.

9. Procedure

9.1. Sample preparation.

9.1.1. Evaluation of natural ^{228}Th interference.

9.1.1.1. Dry and grind 100 g of sample to produce a homogenous mixture.

9.1.1.2. Weigh 100 g of sample into a 500-mL polyethylene bottle and submit for gamma-ray counting. Determine the natural ^{228}Th from its 2614-keV line.

9.1.2. Geological sample dissolution.

9.1.2.1. Weigh a 10-gm aliquot of the soil sample into a 500-mL polyethylene bottle. Add 1 mL of ^{228}Th tracer solution.

9.1.2.2. Add 200 mL of concentrated HNO_3 to the soil sample.

CAUTIOUSLY add the first few drops because carbonate soils react vigorously.

9.1.2.3. Add 200 mL of 48% HF.

CAUTION: Hydrofluoric acid is extremely hazardous. Wear rubber gloves, eye protection, and a lab coat. Completely clean up all spills and wash thoroughly after using HF. Make all HF transfers in an exhaust fume hood to avoid toxic fumes.

9.1.2.4. Place a 1.5-in. Teflon-coated stirring bar in the bottle and loosely cap. The cap must be loose enough to permit generated gases to escape (principally SiF_4 and nitrous oxides) and prevent pressure build-up.

9.1.2.5. Place the bottle in a 1-L beaker of water on a magnetic stirring hot plate and stir the sample overnight with heating.

NOTE: A 1-L beaker on a Corning Model No. PC-351 hot plate set at "2" can be left unattended for 15 h (overnight).

9.1.2.6. Transfer the contents of the polyethylene bottle into a 600-mL Teflon beaker and boil the mixture to dryness.

9.1.2.7. While the sample is drying, rinse the bottle with 200 mL of concentrated HCl. Save the HCl rinse until Step 9.1.2.6 is completed.

9.1.2.8. Pour the HCl rinse into the Teflon beaker after the HNO_3 has been evaporated off. Retrieve the stirring bar and discard the bottle.

9.1.2.9. Evaporate the mixture in the Teflon beaker to approximately 10 mL.

9.1.2.10. Add 100 mL of concentrated HNO_3 and boil to remove the HCl.

9.1.2.11. **CAUTIOUSLY** add 30% H_2O_2 a few drops at a time to oxidize any organic residue. Add HNO_3 and H_2O_2 until the solution is light yellow and clear.

9.1.2.12. Evaporate the sample until the first sign of precipitation appears (about 25-50 mL depending on the sample).

9.1.2.13. Oxidize the sample by adding 35-50 mL of concentrated $HClO_4$.

9.1.2.14. Take the mixture to dryness on high heat.

CAUTION: This step requires CONSTANT attention.

9.1.2.15. Add a few drops of concentrated HCl and 100 mL of 7.2 N HNO_3 to the beaker to dissolve the residue. Cover the beaker with plastic wrap until ready for anion exchange separation.

9.2. Anion exchange separation.

9.2.1. Place a plug of glass wool into the bottom of the labeled anion exchange column. Fill the column with 1 to 2 in. of AG 1-X8 anion exchange resin (50-100 mesh, chloride form).

9.2.2. Wash the column reservoir with 2 to 3 column volumes of 7.2 M HNO_3.

9.2.3. When the liquid is approximately 0.5 cm above the resin bed, gently pour the sample into the column and let the solution drain to the top of the resin bed into a clean, labeled, 100-mL beaker.

9.2.4. Rinse the sample beaker with approximately 1 column volume of 7.2 M HNO_3. Pour the rinse into the column reservoir, and let it drain to the top of the resin bed.

9.2.5. Rinse the column with 1 to 2 column volumes of 7.2 M HNO_3 and drain. Discard the column eluent.

9.2.6. Place a clean beaker under the column and elute the thorium with 20 mL of 8 M HCl.

9.2.7. Proceed to the electrodeposition step as soon as possible to minimize interference from ^{224}Ra.

9.3. Electrodeposition.

9.3.1. Evaporate the sample solution on medium heat until a dry spot appears that cannot be covered by swirling the beaker. Allow the beaker to cool.

9.3.2. Electrodeposition cell preparation.

9.3.2.1. Clean a stainless steel planchet with methyl alcohol.

9.3.2.2. Engrave the sample number on the back of the planchet.

9.3.2.3. Place the planchet on the bottom of an electrodeposition tower and hold it in place with a rubber gasket. Rinse the cell with distilled water to check for leaks.

9.3.3. Add 3 mL of 4% ammonium oxalate solution to the beaker. Transfer this solution to an electrodeposition cell with 0.1 M HCl until the cell is approximately half filled.

9.3.4. Allow the current to flow for 30 min at 1 A.

9.3.5. With the current still on, quench the reaction by filling the cell with 1% NH_4OH solution. Remove the cell from the electrodeposition apparatus.

9.3.6. Empty the cell and rinse the stainless steel planchet with water followed by a rinse with methyl alcohol.

9.3.7. Heat the planchet to a dull red color in the flame of a bunsen burner.

9.3.8. Allow the planchet to cool, place in a labeled envelope, and submit for alpha counting.

9.3.9. Count as soon as possible after electroplating to minimize interference from ^{224}Ra.

10. Operation of Equipment

10.1. Refer to the operating manual for the alpha spectrometer.

11. Calculations

11.1. Count the samples for 80,000 s. Determine the counts for each of the three isotopes by integrating the counts in 19 channels for each energy region.

11.2. Calculate the thorium concentration of the sample.

11.2.1. Correct the tracer for naturally occuring ^{228}Th in the sample.

$$X = \frac{S}{S + R} ,$$

where X = fraction of ^{228}Th gamma activity due to the tracer,
S = net counts in standard 2614-keV ^{228}Th gamma-ray, and
R = net counts in sample's 2614-kev ^{228}Th gamma-ray.

11.2.2. Determine the chemical recovery.

$$RF = \frac{(Cs - Cb) \times X}{T \times D \times S} ,$$

where RF = recovery factor for the ^{228}Th tracer,
Cs = ^{228}Th sample counts,
Cb = ^{228}Th background counts,
X = ^{228}Th fraction from tracer (corrected for sample contribution),
T = count length (min),
D = detector counting efficiency, and
S = concentration of the ^{228}Th standard (dpm).

URANIUM IN BIOLOGICAL MATRICES — DNA

Analyte: Uranium	**Method No.:** ER250
Matrix: Wet or dry biologicals	**Minimum Detectable Concentration:** 0.5 ng/g
Procedure: Instrumental delayed neutron activation (DNA) analysis	**Accuracy and Precision:** 102% ± 11%
Effective Date: 01/01/84	**Authors:** Ernest S. Gladney Daniel R. Perrin George Brooks

SAFETY NOTE: Before beginning this procedure, read all of the Material Safety Data Sheets for the chemicals listed in Sec. 7. Read Sec. 4.3 of the EM-9 Safety Manual for information on personal protective clothing and equipment.

1. Principle of Method

1.1. Biological materials of almost any type can be analyzed for uranium. Dried vegetation, wet tissue, ashed tissue, and foods have been subjected to delayed neutron activation (DNA) at Los Alamos. Certain uranium fission products (primarily from ^{235}U) emit neutrons as their primary decay mode, with a "group" half-life of about 54 s. The neutrons from the samples are counted in ^{3}He detectors following a short thermal neutron irradiation.

1.2. Quantitative data on uranium concentrations are obtained by concurrent measurements of biological standards of known uranium content and isotopic ratio. Some assumptions concerning the uranium isotopic ratio of the samples must be made.

1.3. It is important to employ standards in the same matrix as the samples. Differences in neutron thermalization have been observed among waters, air filters, and biologicals, necessitating the use of matrix-based standards.

2. Sensitivity

2.1. Ten nanograms can normally be detected in 20-g samples in the DNA system for liquid samples. The detection limit is strongly influenced by the precision of the system blank and can increase to 40 ng. Saturation effects in the detector are insignificant at the 10,000-ng uranium level.

3. Accuracy and Precision

3.1. The method is independent of sample size or shape (geometry) for 25-mL rabbits.

3.2. There are several National Institute of Standards and Technology (NIST) Standard Reference Materials (SRMs) with certified or informational values for uranium in dry vegetation, foods, oyster tissue, and bovine liver. Our results for these materials are consistently within 1 standard deviation of the certified mean concentrations, which range from 1 to 500 ng/g of natural isotopic uranium. Over a period of 5 y the determination of uranium in these reference materials had a mean recovery of 102% ± 11% on 98 measurements. Uranium concentrations in NIST biological SRMs determined by DNA are listed below.

NIST SRM	EM-9 Value (ng/g)	NIST Certified Value (ng/g)
1570 Spinach	45.0 ± 0.8	46 ± 9
1571 Orchard Leaves	30.6 ± 0.6	29 ± 5
1573 Tomato Leaves	63 ± 3	61 ± 3
1575 Pine Needles	18 ± 6	20 ± 4
1577 Bovine Liver	0.99 ± 0.25	0.8
1567 Wheat Flour	0.95 ± 0.24	—
1568 Rice Flour	0.89 ± 0.22	—
1569 Brewers Yeast	470 ± 20	490 ± 20[a]

[a]Consensus value.

4. Interferences

4.1. Very high concentrations of fissionable Pu will create positive interference, but this has never been observed in routine biologicals.

4.2. High concentrations of Th relative to U can create positive interferences since thorium fission is induced by fast neutrons. The degree of flux thermalization is very important in minimizing this source of interference. Thorium/uranium ratios of 100:1 are needed before the impact can be observed in our DNA system. This is an unlikely source of interference since thorium is normally not abundant in biological materials.

4.3. Departure of the U isotopic ratio from that assumed can create either positive or negative interferences. Uranium-238 fissions by fast neutron capture while ^{233}U fissions by thermal neutron capture, which has a different yield of delayed-neutron-emitting products. Some assumptions concerning the isotopic abundance in the samples must be made in order to calculate the total uranium

concentration. Uranium-235 may be reported directly with no such assumptions required.

4.4. Very large concentrations of high-cross-section isotopes with short-lived activation products can also interfere with uranium determination. High levels of Al, Na, or Cl produce intense gamma-ray fluxes in the detectors that can eventually overwhelm the neutron peak by gamma-pulse pile-up. The problem cannot be corrected for, but the spectrum can be monitored for its occurrence and data thus affected can be rejected. Smaller masses of the sample can be rerun in an effort to reduce the pulse pile-up to manageable levels.

4.5. Detector saturation will occur at high uranium concentrations. This effect is 1% at natural uranium concentrations up to 10 μg/g.

5. Collection and Storage of Samples

5.1. Freeze wet biologicals upon collection to prevent deterioration due to natural decomposition processes. Samples may also be ashed. Vegetations and foods may be oven dried.

5.2. Store samples in containers that avoid contamination of the biological materials.

6. Apparatus

6.1. Irradiation rabbits: 25-mL, screw-cap, polyethylene, scintillation vials, Packard.

6.2. Nuclear reactor: equipped with a "liquid" delayed neutron facility. The characteristics of the Los Alamos facility are described in detail in Source Material 12.5.

6.3. Drying and ashing ovens.

6.4. Hot plate.

6.5. Flasks: 100-mL, glass, volumetric, new.

6.6. Beakers: 50-mL, Pyrex, new.

6.7. Pipettes with disposable tips: 50- and 100-μL, 1- and 5-mL.

6.8. Freezer for wet biological storage.

7. Reagents

7.1. Nitric acid (concentrated, highest purity available).

7.2. Distilled water (highest purity available).

7.3. Calcium nitrate (uranium-free).

8. Calibration and Standards

8.1. Calibrate the DNA facility by concurrent analysis of known quantities of uranium added to distilled water, of known quantities of uranium added to dry vegetation, or of weighed amounts of NIST SRM 1569 (Brewers Yeast), which has an unusually high uranium content for a biological material. Use the standard matrix that best matches the samples (e.g. water for wet tissue, etc.).

8.2. Standard preparation.

8.2.1. Exclusively use NIST Uranium Isotopic Standards U-0002 through U-970 and NBS SRM 950b (Uranium Oxide, U_3O_8) for the preparation of standard solutions.

8.2.2. Dissolve 117-mg portions of U_3O_8 of the various isotopic compositions in 10 mL of concentrated HNO_3 in a 50-mL beaker on a hot plate. Dilute to 100 mL in volumetric flasks with high-purity distilled water. Stock solutions are now 1,000 μg/g total uranium. Discard beakers in radioactive waste to avoid any possibility of isotopic cross-contamination.

8.2.3. Raw tissue and many foodstuffs contain as much as 90% water by weight. Analyze these materials against water standards.

8.2.4. Biological materials may be dried by oven, freeze-dryer, low-temperature ashing, or high-temperature dry ashing. Standardize materials prepared in any of these fashions by standard addition of small amounts of uranium solutions onto dry vegetation or by running known amounts of NIST SRM 1569 as the standard. If the method of standard additions is to be used, prepare additional dilutions of the concentrated stock just before actual standard preparation.

8.2.5. Dilute 100 μL of concentrated stock to 100 mL with distilled water. This solution is 1,000 μg/L. Pipet 50-, 100-, 250-, and 500-μL quantities onto 2 g of dry vegetation that has already been weighed into the 25-mL irradiation rabbits. Mix thoroughly. This provides standards at the 50-, 100-, 250-, and 500-ng/sample levels.

9. Procedure

9.1. Sample preparation.

9.1.1. Dry biological materials to constant weight in a standard laboratory drying oven at 60-70°C to minimize charring.

9.1.2. An alternative method is to freeze-dry the samples to constant weight.

9.2. Quality control sample preparation.

9.2.1. Use EPA-prepared water samples for wet biologicals.

9.2.2. Weigh 5.0 g of any of the following NIST SRMs into 25-mL irradiation rabbits for use with wet biological materials: 1566, 1570, 1571, 1573, 1575, 1577, 1577a. All materials have certified uranium concentrations in the 0.8 - 120 ng/g range.

9.2.3. Quality control samples should equal approximately 10% of the total number of samples analyzed.

9.3. Blank preparation.

9.3.1. Fill at least five 25-mL irradiation rabbits with uranium-free distilled water and screw lids on tight for use with wet biological materials.

9.3.2. Use empty irradiation rabbits for dry biological materials.

9.4. Sample submission and irradiation.

9.4.1. Stagger the blanks, QCs, and standards evenly throughout the sample set.

9.4.2. Transport the sample set to the Omega West Reactor (TA-2) and submit them directly to the DNA facility operator in Group INC-5. List any special instructions, program code, number of samples, etc. Provide a listing of actual sample weights, since the 25-mL rabbits are not sufficiently uniform in weight to make the assumption of constant tare valid when only a few grams of material are being analyzed.

9.4.3. Sample irradiation and counting are conducted by INC-5 in the "liquid" DNA facility as described in more detail in Source Material 12.5. All data reduction is done on-line by INC-5's PDP 11/60. Data are mailed to us.

9.4.4. Return the samples to our laboratory after they have been allowed to decay for two weeks. Discard the blanks in radioactive waste. Save the samples until the customer has accepted the data.

9.4.5. Standards and quality assurance samples may be reused. A two-week decay is recommended to minimize personnel radiation exposure, but there is no nuclear chemical barrier to immediate reuse if necessary.

10. Operation of Equipment

10.1. Equipment operation is the responsibility of INC-5.

11. Calculations

11.1. The general form of the data received from INC-5 is shown below. The stated result must be recalculated due to highly variable system blanks and the absence of daily standardization or quality control. Accurate daily determination of the system blank is required since this becomes an especially important source of error as the detection limit is approached. Many biological samples have uranium concentrations near the system detection limit.

OUTPUT FROM INC-5

Sample	Weight	Peak	Valley	Flux	ng/g
632a	2.00	882.	11.	5174	299.8
632b	2.00	966.	23.	5311	322.2
632c	2.00	1094.	20.	5264	371.6
97111a	7.01	255.	6.	5252	19.2
97112a	10.20	5449.	1127.	5238	384.6

11.2. The peak/valley ratio from the INC-5 data must be calculated for each sample. Ratios that fall below 5.0 indicate excessive gamma-pulse pile-up. Such samples will have to be either diluted and rerun or measured by another analytical technique. Data with ratios between 5.0 and 10.0 will have a cautionary note placed in the comment field of the database indicating that the results may be suspect. Data with ratios greater than 10.0 should be accurate.

11.3. Calculate the system calibration factor from the following equation:

$$K = \frac{A \times W \times F}{(P - B)} ,$$

where K = calibration factor (an average K will usually be calculated using multiple standards),
A = concentration of U standard (μg/g),
W = weight of standard (g),
F = reactor flux during irradiation of the standard,
P = gross counts in neutron peak of the standard, and
B = average gross counts in neutron peak of blanks.

11.4. Final U results are calculated by INC-5 using the following formula:

$$U = \frac{(P - B) \times K}{W \times F} ,$$

where U = concentration of uranium in the sample (μg/g),
P = gross counts in neutron peak of sample,
B = average gross counts in neutron peak of blanks,
W = sample weight (g),
F = reactor flux during irradiation of the sample, and
K = system calibration factor from Step 11.3.

11.5. Overall uncertainty is reported as the propagated sum of uncertainties from individual parts of the calculation process.

11.5.1. Calculate the counting uncertainty as follows:

$$D = \sqrt{P + B} ,$$

where D = counting uncertainty in total counts,
P = gross counts in the neutron peak of sample, and
B = average gross counts in the neutron peak of blanks.

11.5.2. Calculate the uncertainty in the calibration factor as follows:

E = standard deviation among all K factors for the same run,

where E = calibration uncertainty and
K = calibration factors from Step 11.3.

11.5.3. Calculate the uncertainty in sample weight as follows:

$$G = \frac{X}{W} ,$$

where G = uncertainty in sample weight,
X = minimum weight that the analytical balance can sense (g), and
W = sample weight (g).

11.5.4. Calculate the uncertainty in the reactor flux as follows:

$$H = \frac{1}{\sqrt{F}} ,$$

where H = uncertainty in reactor flux, and
F = reactor flux.

11.5.5. The final propagated uncertainty is calculated as follows:

$$V = U \times \sqrt{D^2 + E^2 + G^2 + H^2} ,$$

where V = overall uncertainty (μg/g),
U = result from Step 11.4 (μg/g),
D = counting uncertainty,
E = calibration factor uncertainty,
G = sample weight uncertainty, and
H = reactor flux uncertainty.

11.6. All sample calculations assume natural uranium isotopic abundance unless otherwise specified by the customer. In the latter case, the $^{235}U/^{238}U$ ratio must be determined by another analytical method and the data adjusted as follows:

$$T = \frac{I}{R} \times U ,$$

where T = adjusted total uranium concentration in the sample (μg/g),
I = $^{235}U/^{238}U$ ratio in natural materials (0.0072),
R = $^{235}U/^{238}U$ ratio measured in the sample, and
U = uranium concentration in the sample from Step 11.4 (μg/g).

12. Source Materials

12.1. S. Amiel, "Analytical Applications of Delayed Neutron Emission in Fissionable Elements," *Anal. Chem.* **34**, 1683-1692 (1962).

12.2. S. Amiel, J. Gilet, and D. Heymann, "Uranium Content of Chondrites by Thermal Neutron Activation and Delayed Neutron Counting," *Geochim. Cosmochim. Acta* **31**, 1499-1503 (1967).

12.3. G. R. Keepin, T. F. Wimett, and R. K. Zeigler, "Delayed Neutrons from Fissionable Isotopes of Uranium, Plutonium, and Thorium," *Phys. Rev.* **107**, 1044-1049 (1957).

12.4. S. J. Balestrini, J. P. Balagna, and H. O. Menlove, "Two Specialized Delayed Neutron Detector Designs for Assays of Fissionable Elements in Water and Sediment Samples," *Nucl. Instru. Methods* **136**, 521-524 (1976).

12.5. E. S. Gladney, D. B. Curtis, D. R. Perrin, J. W. Owens, and W. E. Goode, "Nuclear Techniques for the Chemical Analysis of Environmental Materials," Los Alamos Scientific Laboratory report LA-8192-MS (1980).

12.6. M. A. Gautier, E. S. Gladney, and B. T. O'Malley, "Quality Assurance for Health and Environmental Chemistry: 1985," Los Alamos National Laboratory report LA-10813-MS (1986).

12.7. E. S. Gladney, D. R. Perrin, and W. K. Hensley, "Determiation of Uranium in NBS Biological Standard Reference Materials by Delayed Neutron Assay," *J. Radioanal. Chem.* **59**, 249-251 (1980).

URANIUM IN GEOLOGICALS — DNA

Analyte: Uranium	**Method No.:** ER260
Matrices: Soils, rocks, sediments, and ores	**Minimum Detectable Concentration:** 0.1 ppm
Procedure: Instrumental delayed neutron activation (DNA) analysis	**Accuracy and Precision:** 100% ± 6%
Effective Date: 01/01/84	**Authors:** Ernest S. Gladney Daniel R. Perrin George H. Brooks

SAFETY NOTE: Before beginning this procedure, read all of the Material Safety Data Sheets for the chemicals listed in Sec. 7. Read Sec. 4.3 of the EM-9 Safety Manual for information on personal protective clothing and equipment.

1. Principle of Method

1.1. Silicate materials from almost any source contain at least a small amount of uranium. Certain uranium fission products (primarily from ^{235}U) emit neutrons as their primary decay mode, with a "group" half-life of about 54 s. The neutrons from the samples are counted in ^{3}He detectors following a short thermal neutron irradiation.

1.2. Quantitative data on uranium concentrations are obtained by concurrent measurements of rocks or ores of known uranium content and isotopic ratio. Some assumptions concerning the uranium isotopic ratio of the samples must be made.

1.3. It is important to employ standards of the same matrix as the samples. Differences in neutron thermalization have been observed among silicates, waters, air filters, and biologicals, necessitating the use of matrix-based standards.

2. Sensitivity

2.1. Four hundred nanograms of uranium can normally be detected in the delayed neutron activation (DNA) system for silicate samples. The silicate system has much greater internal shielding than the liquid system to minimize gamma-ray pulse pile-up from ^{28}Al, a major short-lived activation product in rocks. This is the primary reason for the much higher detection limits observed with this system. The system blank is ordinarily not an important factor.

2.2. Saturation effects in the detector are an important consideration for samples with more than 1,000 μg total uranium of natural isotopic abundance (Fig 1). Higher concentrations of uranium may be handled by lowering the reactor power level.

3. Accuracy and Precision

3.1. The method is independent of sample size or shape (geometry) for 4-mL irradiation rabbits.

3.2. There are numerous National Institute of Standards and Technology (NIST), United States Geological Survey (USGS), and Canadian Certified Reference Materials Project (CCRMP) rock and ore reference materials with certified or well-established consensus values for uranium. Our results for these are consistently within ± 1 standard deviation of the certified mean concentrations, which range from 0.5 - 10,000 μg/g natural uranium (see Table I). Over a period of 5 years the determination of uranium in these reference materials had a mean recovery of 100% ± 6% on 800 measurements.

4. Interferences

4.1. Very high concentrations of fissionable Pu will create positive interference, but this has never been observed in routine samples.

4.2. High concentrations of Th relative to U can create positive interferences since thorium fission is induced by fast neutrons. The degree of flux thermalization is very important in minimizing this source of interference. Thorium/uranium ratios of 50:1 are needed before the impact can be observed in our silicate DNA system. This has been observed on the USGS GSP-1 reference material.

4.3. Departure of the U isotopic ratio from that assumed can create either positive or negative interferences. Uranium-238 fissions by fast neutron capture while ^{233}U fissions by thermal neutron capture, which has a different yield of delayed-neutron-emitting products. Some assumptions concerning the isotopic abundance in the samples must be made in order to calculate total uranium concentration. Uranium-235 may be reported directly with no such assumptions required.

5. Collection and Storage of Samples

5.1. There are no special collection requirements.

5.2. Store samples in containers that avoid contamination after collection.

6. Apparatus

6.1. Irradiation rabbits: 4-mL, screw-cap, polyethylene, manufactured in Los Alamos.

6.2. Nuclear reactor: equipped with a "silicate" delayed neutron facility. The characteristics of the Los Alamos facility are described in detail in Source Material 12.5.

6.3. Analytical balance: top loading.

7. Reagents

7.1. None required.

8. Calibration and Standards

8.1. Calibrate the DNA facility by concurrent analysis of National Bureau of Standards (NBS) Standard Reference Material (SRM) 1633a (Trace Elements in Coal Fly Ash) with a certified uranium content of 10.2 ± 0.1 ppm.

9. Procedure

9.1. Sample preparation.

9.1.1. Sample preparation is usually done by the customer and normally consists of drying and grinding the silicate material.

9.2. Quality control sample preparation.

9.2.1. Place 1-2 g of any of a number of certified reference materials into 4-mL irradiation rabbits. The water content of most materials is so low that they can be used without additional drying.

9.2.2. Quality control samples should equal approximately 10% of the total number of samples analyzed.

9.3. The activity of the system blank is far below the detection limits. No daily blanks are required.

9.4. Sample submission and irradiation.

9.4.1. Stagger the QCs and standards evenly throughout the sample set.

9.4.2. Transport the sample set to the Omega West Reactor (TA-2) and submit them directly to the DNA facility operator in Group INC-5. List any special instructions, program code, number of samples, etc. Samples

will be weighed by INC-5. For samples with weights less than 50 mg, preweighing is advised since the INC-5 balance gives only 2-decimal-place accuracy.

9.4.3. Sample irradiation and counting are conducted by INC-5 in the silicate DNA facility as described in more detail in Source Material 12.5. All data reduction is done on-line by INC-5's PDP 11/60 and is mailed to us.

9.4.4. Return the samples to our laboratory after they have been allowed to decay for two weeks. Save the samples until the customer has accepted the data.

9.4.5. Standards and quality control samples may be reused. A two-week decay is recommended to minimize personnel radiation exposure, but there is no nuclear chemical barrier to immediate reuse if necessary.

9.5. Samples with high concentrations of uranium may be analyzed with this system if advance arrangement is made with the reactor operations staff to run the reactor at lower power. The normal reactor power level is 8000 kW, but this can be reduced by up to a factor of 100, which extends the upper detector saturation limit by a factor of 100 to over 100,000 μg of total uranium of natural isotopic abundance (see Fig. 1).

10. Operation of Equipment

10.1. Equipment operation is the responsibility of INC-5.

11. Calculations

11.1. The general form of the data received from INC-5 is shown below. Check the results for the NIST 1633a standards. If they are within 10.0 - 10.4 ppm, the stated results for the run may be accepted without recalculation. If the results for NIST 1633a are outside this range, calculate a correction factor and multiply all stated results by the calculated factor: correction factor = $10.2/\overline{X}$, where $\overline{X}$ = concentration of U measured in 1633a.

11.2.3. Determine the concentration of ^{230}Th in the sample.

$$C = \frac{Cs - Cb}{T \times D \times RF \times W \times 2.22} ,$$

where C = concentration of ^{230}Th in the sample (pCi/g),
Cs = ^{230}Th sample counts,
Cb = ^{230}Th background counts,
T = counting time (min),
D = detector counting efficiency,
RF = recovery factor for the ^{228}Th tracer,
W = sample weight (g), and
2.22 = factor used to convert dpm to pCi.

11.2.4. Uncertainties are usually reported based only on counting statistics.

12. Source Materials

12.1. R. J. Peters and E. S. Gladney, "Determination of Thorium-230 in CCRMP Reference Samples by Alpha Spectroscopy," *Geostandards Newsletter* 7, 319-320 (1983).

12.2. M. A. Gautier, E. S. Gladney, and B. T. O'Malley, "Quality Assurance for Health and Environmental Chemistry: 1985," Los Alamos National Laboratory report LA-10813-MS (1986).

12.3. E. Holm, "Review of Alpha-Particle Spectrometric Measurements of Actinides," *Int. J. Radiat. Isot.* **35**, 285-290 (1984).

12.4. R. L. Williams, "A Computerized Alpha-particle Spectrometry System for the Analysis of Low-Level Thorium, Uranium, Plutonium, and Americium Fractions," *Int. J. Radiat. Isot.* **35**, 271-277 (1984).

12.5. *EML Procedures Manual*, 26th ed., H. L. Volchok and G. de Planque, Eds. (Environmental Measurements Laboratory, US Department of Energy, New York, New York, HASL-300, 1986).

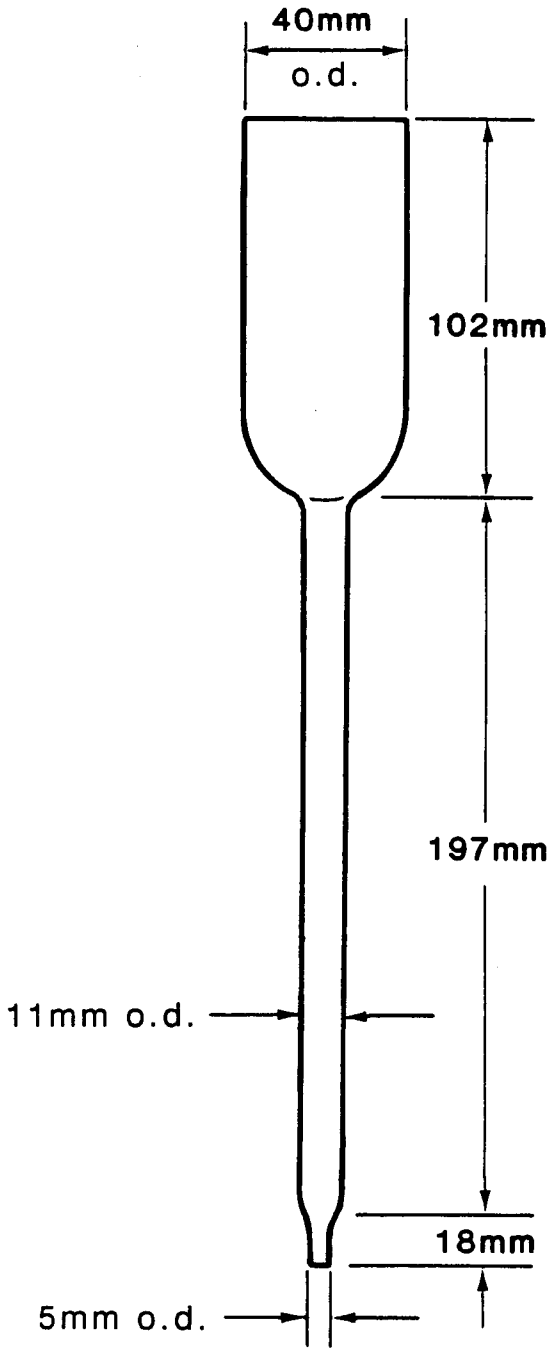

Fig. 1. Ion exchange column.

TRITIUM IN ENVIRONMENTAL MATRICES — DISTILLATION PROCEDURE

Analyte: ^3H as tritiated water	**Method No.:** ER210
Matrix: Air, soil, biologicals, and water	**Minimum Detectable Activity:** 2.5 pCi total activity, or 500 pCi/L per 5-mL sample
Procedure: Distillation and liquid scintillation counting	**Accuracy and Precision:** 97% ± 14%
Effective Date: 04/15/84	**Author:** Richard J. Peters George H. Brooks

SAFETY NOTE: Before beginning this procedure, read all of the Material Safety Data Sheets for the chemicals listed in Sec. 7. Read Sec. 4.3 of the EM-9 Safety Manual for information on personal protective clothing and equipment.

1. Principle of Method

1.1. Tritiated water is distilled from the sample and pipetted directly into a polyethylene liquid-scintillation vial to which a scintillation cocktail is added. Decay of ^3H is observed by liquid scintillation.

2. Sensitivity

2.1. Sensitivity is limited by count length and the detector background.

2.2. For routine measurements with a 60-min count length, the minimum detection limit (3 sigma above background) is 2.5 pCi of total activity. This equals 500 pCi/L for distilled 5-mL water samples. The minimum detectable level for air samples with a total air volume of 10.2 m^3 and a silica gel mass of 15 g equals 0.7 pCi/m^3.

3. Accuracy and Precision

3.1. There are no reference materials available from any agency for tritium in biological or silicate matrices.

3.2. There are no National Institute of Standards and Technology (NIST) Standard Reference Materials (SRMs) for dilute tritium in water. Both Environmental Protection Agency (EPA) and Environmental Measurements Laboratory (EML) quality assurance programs circulate intercomparison samples of tritium in water. We also prepare QC in-house materials for tritium in water and soil.

Over a period of six years the determination of tritium in these QC materials had a mean recovery of 97% ± 14% on 892 measurements.

4. Interferences

4.1. Low-energy activity from other isotopes in the sample may result in positive interference.

4.2. Light-absorbing or light-scattering materials may result in negative interference (quenching).

4.3. Interferences from Steps 4.1 and 4.2 are minimized as follows.

4.3.1. Distill samples that were previously analyzed without distillation.

4.3.2. Simple redistillation is probably not effective for samples that were previously distilled. Redistillation using an oxidizing agent such as potassium permanganate and refluxing may eliminate volatile organic codistillates.

4.3.3. The addition of standard known quantities of tritium to previously counted samples and recounting is another method.

4.4. Internal luminescence of the samples or cocktail may result in positive interference.

4.4.1. This interference is usually reduced by permitting samples to equilibrate in the chilled, dark counting chamber of the liquid scintillation counter for 2 h before actual counting.

4.4.2. Repetitive counting of samples to determine the half-life for "long-lived" luminescence and calculation of a correction factor is a second method for reducing this form of interference.

5. Collection and Storage of Samples

5.1. There are no special collection and storage requirements for water samples.

5.2. Water vapor from air samples is collected on silica gel and distilled by Group EM-8. Samples are received as 5-mL aliquots in scintillation vials containing 15 mL of cocktail.

5.3. Freeze biologicals and soils at the time of collection and thaw just before distillation.

NOTE: These samples must **NOT** be air or oven dried.

6. Apparatus

6.1. Beakers: 50-, 600-, and 1000-mL, Pyrex.

6.2. Scintillation counting vials: 25-mL, polyethylene, with plastic caps.

6.3. Pipette: Oxford Macro, with 5-mL disposable tips.

6.4. Hot plates.

6.5. Watch glasses.

6.6. Filter apparatus with 0.45-μm membrane.

6.7. Centrifuge tubes: 50-mL, glass.

6.8. Liquid scintillation counter: Packard Model 2200CA or 2500TR.

6.9. Kimwipes.

6.10. Heating mantles.

6.11. Round-bottom flasks: 250-mL.

6.12. Distillation apparatus.

7. Reagents

7.1. Liquid scintillation cocktail: Ultima-Gold or other similar commercial product. Evaluate each new lot number to assure reproducibility of results.

7.2. Low-tritium-background water.

7.3. Methanol.

7.4. Potassium permanganate.

8. Calibration, Quality Assurance Materials, and Blanks

8.1. Calibration

8.1.1. In order to provide accurate analysis for each type of matrix encountered, matrix-specific calibration curves must be established.

8.1.1.1. Prepare a set of 10 samples within the matrix-specific liquid scintillation cocktail (10 mL for the bioassay program, and 15 mL for the environmental program).

8.1.1.2. All samples will be overspiked with equal levels of H-3 standard (determine the amount that will provide adequate counting statistics within a reasonably short time).

8.1.1.3. Prepare a concentrated salt solution (5 gms NaI + 40 mL deionized H_2O); this is the quench agent.

8.1.1.4. Vary the amount of quench agent that is added to each of the 10 samples (usually ranging from 0 to 70 μL).

8.1.1.5. Count the samples in the liquid scintillation counting system. Use the appropriate counting protocol for the matrix of interest (i.e., Bioassay or Environmental program).

8.1.1.6. When initializing the liquid scintillation system, provide the appropriate input for the quench curve program. This will require the amount of standard added to the samples, the decay date of the standard, and any additional information that may be added to the comment field.

8.1.1.7. After the counting cycle is complete, the quench curve information may need to be copied to the counting protocols for the 2200CA counting system or the information is used automatically by the 2500TR counting system.

8.2. Quality Assurance Materials

8.2.1. Open Quality Assurance Materials

8.2.1.1. Prepare a set of samples that match the matrix of interest in the sample-to-cocktail load.

8.2.1.2. Make several sets of various overspikes utilizing a NIST H-3 standard, 4361B-57. Suitable activity ranges are 100 - 1000 pCi/L for the Environmental program and 1000 - 10,000 pCi/L for the Bioassay program.

8.2.1.3. Document the activity levels in the various QC's as a permanent marking upon the samples.

8.2.1.4. These samples can be run with any sample set. The information gathered from the analysis of these samples will provide the count room personnel with a high degree of confidence that the current set of samples that were analyzed were completed within acceptable analytical limits.

8.2.2. Blind Quality Assurance Materials

8.2.2.1. Blind QC samples are usually run with every set. These samples are provided by the sample receiving section within EM-9. The QCs are provided with the sample set; the specific samples are unknown to the analyst.

8.2.2.2. The samples are run with the routine samples. The exact nature of the samples are not known until the final data reduction and report generation has taken place.

8.3. Blanks

8.3.1. Matrix blanks should be run with every set.

8.3.1.1. Four sets of three blanks each should be generated for each matrix. Obtain some deep-well water for the blank substrate.

8.3.1.2. Run one set of three with each sample set, at the beginning of the set. These samples will then be utilized within the data reduction program.

9. Procedure

9.1. Soil samples (see Fig. 1).

9.1.1. Fill a 600-mL beaker to approximately 2/3 capacity with soil from which water is to be distilled.

9.1.2. Place a 50-mL beaker in the center of the soil so that about half the depth of the beaker is buried in the soil.

9.1.3. Place a clean watch glass on top of the 600-mL beaker and seal around the edge with plastic wrap.

9.1.4. Place ice in the watch glass and put the whole assembly on a hot plate. Set heat to maximium. Water will distill from the soil, condense on the under side of the watch glass, and drip into the 50-mL beaker.

9.1.4.1. Additional ice may be needed in the watch glass as the distillation proceeds.

9.1.4.2. If the soil is wet, use a lower heat setting on the hot plate to keep soil from spattering into the collected water.

9.1.5. Collect approximately 10 mL of water.

9.1.6. Pipet a 5-mL aliquot of the distillate into the counting vial.

9.1.7. Add 15 mL of scintillation cocktail to the vial and cap tightly. Shake the vial vigorously for a few seconds.

9.1.8. Label the cap of the scintillation vial with the sample number and submit to the counting facility for liquid scintillation counting.

9.2. Drinking water.

9.2.1. Filter the sample through a 0.45-μm membrane filter.

9.2.2. Pipette 5 mL of the filtrate into a 25-mL glass scintillation vial.

9.2.3. Proceed with Steps 9.1.7 to 9.1.8.

9.3. Sewage or turbid water.

9.3.1. If a gross alpha/beta determination has also been requested on these samples, measure 900 mL of the sample into a 1-L beaker. If only tritium is to be determined on these samples, use approximately 30 mL of sample in a 50-mL beaker.

9.3.2. Place the beaker on a hot plate.

NOTE: If several samples are treated at the same time, cover each beaker with plastic wrap to prevent cross contamination.

9.3.3. Place a large collection flask in a ring stand to one side of the hot plate turned so that the pouring spout of the collection flask is to the right of the beaker (Fig. 2). Cover the sample beaker and collection flask with plastic wrap except for a small section by the pouring spout.

9.3.4. Place a 50-mL beaker on a stand directly under the pouring spout of the collection flask to collect the water that will condense in the flask. Collect approximately 10 mL of water.

9.3.5. If the distillate is clear, proceed with Steps 9.1.6 to 9.1.8.

9.3.6. If the distillate is colored, redistill over potassium permanganate using reflux conditions. Note on the sample logsheet that this may be a problem sample requiring standard addition for quantitative analysis.

9.3.7. When the water collection is complete, rinse the collection flask with water and then with methanol. It is important that the collection flask be completely dry before using it for the next sample distillation.

9.3.8. If a gross alpha/beta determination has been requested, proceed with Step 9.4.1 of Method No. ER100.

9.4. Biological samples.

9.4.1. Analyze fresh or frozen samples that have **NOT** been air or oven dried. Fill a 600-mL beaker approximately 2/3 full with the biological sample from which water is to be distilled.

9.4.2. Proceed as in Steps 9.1.2 and 9.1.3.

9.4.3. Place ice in the watch glass and put the whole assembly on a hot plate (Fig. 1). Begin the distillation with a low heat setting (2) and increase the temperature slowly, being careful to minimize charring of the sample. The water will distill from the sample, condense on the underside of the watch glass, and drip into the 50-mL beaker. Additional ice may be needed in the watch glass as the distillation proceeds.

9.4.4. Collect at least 6 mL of water. Achieving the preferred minimum of 10 mL may be very difficult for some types of biological samples.

9.4.5. If the sample is clear, proceed with Steps 9.1.6 to 9.1.8.

9.4.6. If the distillate is colored, redistill the sample over potassium permanganate using reflux conditions. Note on the sample logsheet that this may be a problem sample requiring standard addition for quantitative analysis. Proceed with Step 9.1.6 to 9.1.8.

9.5. Silica Gel Cartridges.

9.5.1. Obtain the necessary number of centrifuge tubes. Mark the top of each tube with the sample number.

9.5.2. Weigh each centrifuge tube (with the cap on) to determine a tare weight of the tube. Use the styrofoam holders that the tubes come in as a stand to hold them on the balance.

9.5.3. Set up the distillation apparatus in the hood. This will require that the condenser be connected to the cold water supply. Raise the pressure of the water to provide an adequate flow through the condenser.

9.5.4. Carefully open the first silica gel cartridge. Empty the contents of the cartridge, through a funnel, into the round-bottom flask held in the heating mantle.

9.5.5. Replace the top of the condenser on the round bottom flask. Place the other end of the condenser in the centrifuge tube. All the condensate will collect in this tube.

9.5.6. Turn on the rheostat, then the switch.

NOTE: It is very important that the rheostat not be turned higher than 78% of the dial reading. The heating mantles are extremely susceptible to high voltages, which will cause the unit to fail prematurely.

9.5.7. It should take approximately 20-30 min for the mantle to reach the optimum temperature. You should notice a small amount of condensate within the condenser. If this is not seen, or the tube is cool to the touch, determine whether the unit is plugged in or the rheostat is working.

9.5.8. When the silica gel turns a deep blue (cobalt) in color, most (99%) of the moisture has been driven off and into the centrifuge tube. Turn off the rheostat and the switch.

9.5.9. Remove the condenser and pour the silica gel into a beaker. Let it cool before it is replaced in the cartridge.

9.5.10. Repeat Steps 9.5.4 to 9.5.9 for each successive sample.

9.5.11. Weigh each completed sample to determine the gross weight. Subtract the tare weight from the gross weight to determine the net weight of the sample. Record this weight; it will be required in the final report.

9.5.12. Proceed with Steps 9.1.6 to 9.1.8.

10. Operation of Instrument

10.1. Loading the liquid scintillation counter.

10.1.1. Tighten the lid on the scintillation vial and shake vigorously to ensure complete mixing of the sample and cocktail.

10.1.2. Wipe the outside of the vial with a tissue and place the vial in the scintillation counter sample tray.

10.1.3. Write the sample number in the appropriate position on the tritium counting data sheet (Fig. 3).

10.1.4. Repeat the above procedure with the tray containing the standards and blanks. This tray should have the appropriate program indicator.

10.1.5. Place the samples within the sample tray in the following order: The three blanks, two samples, then the open QC's, then the remaining samples.

10.1.6 Place the samples within the liquid scintillation instrument, and let cool for approximately 1/2 hour before beginning the count sequence. This will eliminate or at least minimize the effects of photoluminescent reactions.

10.2. To begin the counting sequence, depress the **F2** key on the 2200CA system, or the **GREEN** button on the 2500 TR system. This will automatically load and count the samples, providing both a hard copy and a disk file for later transferral to the VAX system.

10.3. Simultaneously press the **ENABLE** and **FORWARD** keys on the counter to begin counting.

10.4. For further information concerning the operation of the instrument systems, refer to the EM-9 Nuclear Counting Facilities Operating Procedures manual, procedure CR180.

11. Calculations

11.1. Calculations of radiometric counting data for determinations are made without a radiotracer. Most data values are assumed to have Poisson distributions and all time-measurement errors are assumed to be insignificant.

11.2 Counting efficiency.

11.2.1. The counting efficiency of the counter for a single standard run is calculated by the counter using an external standard and an established quench correction curve.

11.3. Background.

11.3.1 Background decompositions per minute are calculated by the counter. The calculation program averages three backgrounds for background.

11.3.2 The running average background count rate is calculated by

$$\overline{B} = \frac{\Sigma_1^3 B}{3} ,$$

where B = background count rate, and
$\overline{B}$ = average background count rate.

11.3.3. The standard deviation for the average background count rate is calculated by:

$$SD(B) = \frac{3 \times \sqrt{C_b}}{B} ,$$

where $SD(\overline{B})$ = standard deviation of the running average of the background,
$\overline{B}$ = average background from Step 11.3.2,
B = individual background count rate, and
n = number of values used.

11.4. Sample activity.

11.4.1. The activity in the samples is given by:

$$A_x = (A - \overline{B}) ,$$

where A_x = net sample activity (dis/min per sample), and
A = gross sample dis/min from the counter.

11.4.2. The standard deviation of the activity in the sample is given by:

$$\frac{3x \sqrt{A_x}}{A} ,$$

where $SD(A_x)$ = standard deviation of sample activity (dis/min), and
A = gross sample dis/min.

11.4.3. The minimum detectable activity for high-background instruments is determined to be three times the standard deviation of the background:

$$MDA = \frac{3 \times SD(B)}{K} ,$$

where MDA = minimum detectable activity (dis/min),
SD (B) = standard deviation of the background count rate (counts/min), and
K = constant in sample units.

11.5. Calculation to put the radiometric measurement into the required form for final reporting.

11.5.1. Reported activity.

$$R_x = \frac{A_x}{K \times Q} ,$$

where R_x = sample activity in correct units for reporting (pCi/L),
A_x = sample activity (dis/min),
K = conversion factor (2.22 pCi per dis/min), and
Q = sample quantity analyzed (0.005 L).

11.5.2. The propagated uncertainty of the reported activity is

$$U_x = |R_x| \times \sqrt{SD\,(A_x)^2 + SD\,(\overline{B})^2 + \frac{SD\,(Q)^2}{Q^2}} ,$$

where U_x = propagated uncertainty of the reported activity,
R_x = reported activity,
$SD\,(A_x)$ = standard deviation of sample activity,
$SD\,(\overline{B})$ = standard deviation of the average background,
$SD\,(Q)$ = standard deviation of the sample quantity aliquoted, and
Q = sample quantity aliquoted in reporting units.

12. Resources

12.1. M. A. Tamers, "Liquid Scintillation Counting of Low Level Tritium," Packard Technical Bulletin No. 12 (June 1964).

12.2. M. A. Gautier, E. S. Gladney, and B. T. O'Malley, "Quality Assurance for Health and Environmental Chemistry: 1985," Los Alamos National Laboratory report LA-10813-MS (1986).

12.3. "American National Standard for Performance Criteria for Radiobioassay," draft, American National Standards Institute, ANSI N13.30 (1989).

12.4 L. A. Currie, "Limits for Qualitative Detection and Quantitative Determination," *Anal. Chem.* **40**, 586-593 (1968).

Revisions or additions to the procedure are marked (▒▒▒). Where a section heading is marked, the entire section has been revised.

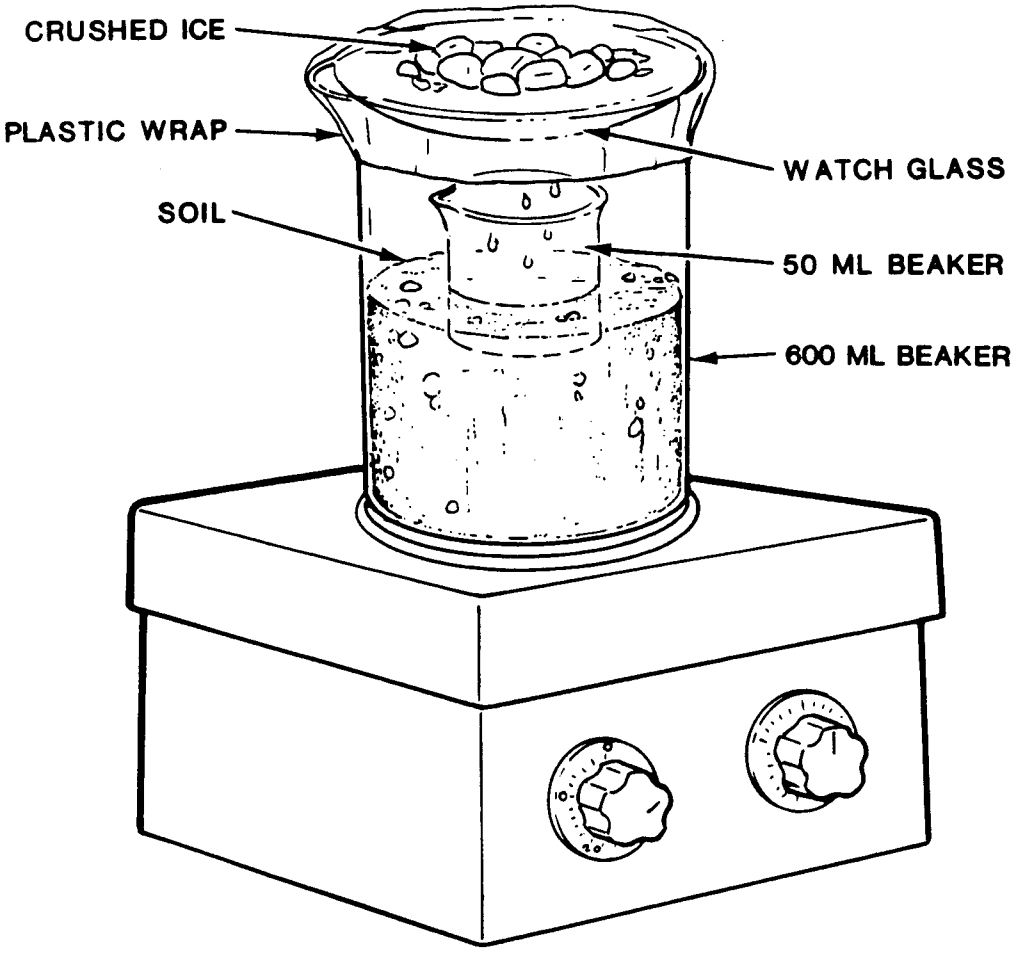

Fig. 1. Distillation apparatus for soil samples.

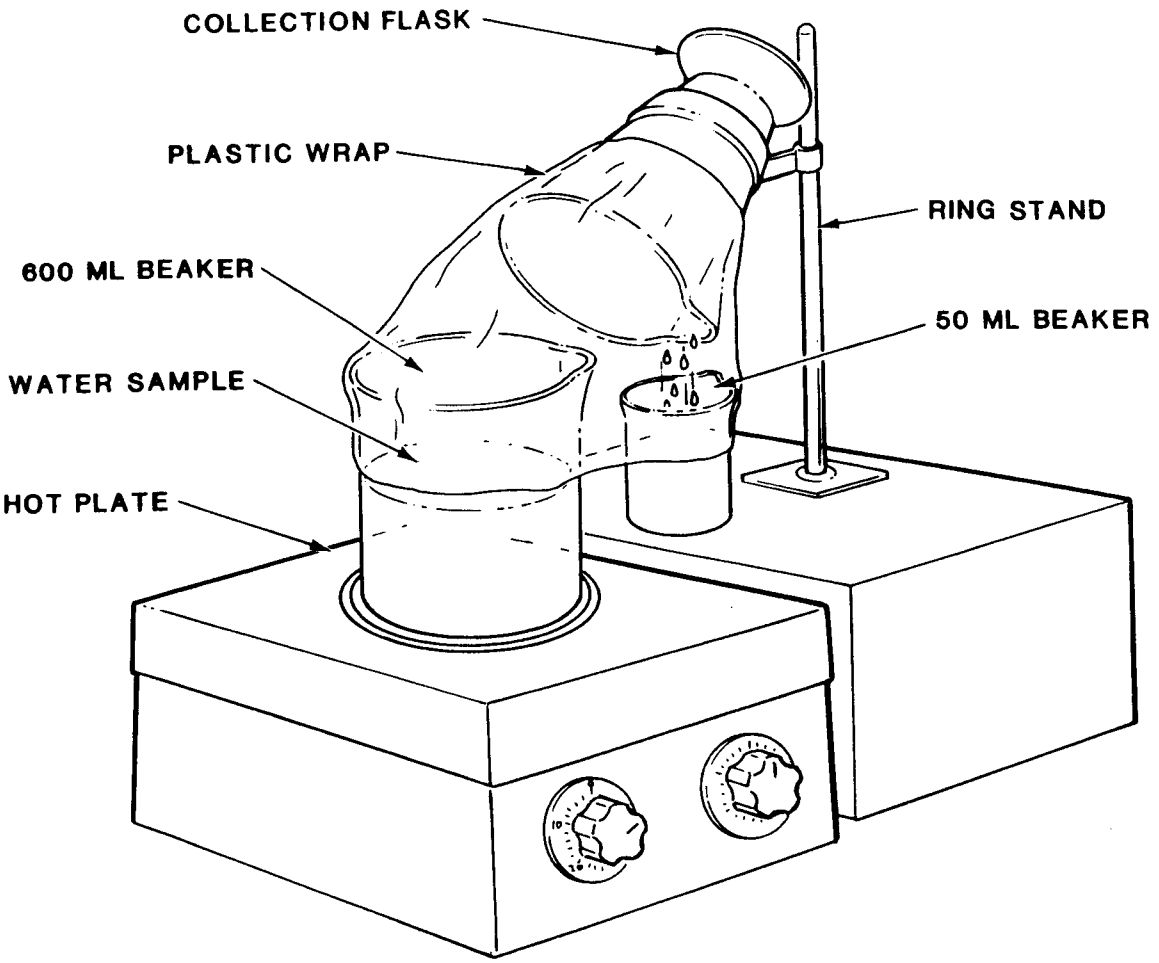

Fig. 2. Distillation apparatus for sewage or turbid water.

Program #= 5 01/05/90 13:21

REGION A: LL-UL= 0- 19 LCR= 0 BKG= .00 % 2 SIGMA= .0

REGION B: LL-UL= 2- 19 LCR= 0 BKG= .00 % 2 SIGMA= .0

REGION C: LL-UL= 0- 0 LCR= 0 BKG= .00 % 2 SIGMA= .0

TIME= 30.00 K= .033 QIP=SIE/AEC

P#	S#	Time	CPMA/K	%DEV	CPMB/K	%DEV	CPMC/K	%DEV	SIE	SIS	MIN
5	1	30.00	585.86	8.30	537.37	8.67	.00	.00	793.	26.121	32
5	2	30.00	585.86	8.30	549.49	8.57	.00	.00	789.	26.032	63
5	3	30.00	494.95	9.04	459.60	9.38	.00	.00	781.	27.242	94
5	4	30.00	429.29	9.70	416.16	9.85	.00	.00	557.	27.493	125
5	5	30.00	480.81	9.17	459.60	9.38	.00	.00	557.	27.316	157
5	6	30.00	469.70	9.27	445.45	9.52	.00	.00	558.	27.880	188
5	7	30.00	149783.	.52	137031.	.54	.00	.00	561.	13.092	219
5	8	30.00	1084.85	6.10	998.99	6.36	.00	.00	559.	20.483	250
5	9	30.00	1239.39	5.71	1149.50	5.93	.00	.00	558.	19.838	281
5	10	30.00	1144.44	5.94	1062.63	6.17	.00	.00	558.	20.602	312
5	11	30.00	487.88	9.10	463.64	9.34	.00	.00	575.	26.037	344
5	12	30.00	457.58	9.40	434.34	9.64	.00	.00	574.	26.943	375
5	13	30.00	443.43	9.55	415.15	9.87	.00	.00	576.	25.930	406
5	14	30.00	500.00	8.99	478.79	9.19	.00	.00	576.	26.611	437
5	15	30.00	454.55	9.43	428.28	9.71	.00	.00	572.	26.366	468
5	16	30.00	2546.46	3.98	2344.44	4.15	.00	.00	586.	16.822	500
5	17	30.00	458.59	9.39	439.39	9.59	.00	.00	574.	27.297	531
5	18	30.00	446.46	9.51	424.42	9.76	.00	.00	566.	27.158	562
5	19	30.00	505.05	8.94	486.87	9.11	.00	.00	573.	26.746	593
5	20	30.00	459.60	9.38	423.23	9.77	.00	.00	569.	26.180	624

Fig. 3. Tritium counting data sheet.

URANIUM-235/URANIUM-238 RATIO IN GEOLOGICALS AND NATURAL WATERS — RTNA

Analyte: $^{235}U/^{238}U$	**Method No.:** ER230
Matrices: Soils, rocks, sediments, ores, and natural waters	**Minimum Detectable Isotopic Ratio:** 0.0001
Procedure: Preirradiation separation of uranium, and thermal neutron activation analysis	**Accuracy and Precision:** ± 3% at natural isotopic abundance
Effective Date: 01/01/85 to 06/01/90	**Authors:** Ernest S. Gladney Richard J. Peters

SAFETY NOTE: Before beginning this procedure, read all of the Material Safety Data Sheets for the chemicals listed in Sec. 7. Read Sec. 4.3 of the EM-9 Safety Manual for information on personal protective clothing and equipment.

1. Principle of Method

1.1. Uranium of unknown isotopic composition is chemically separated from silicate or aqueous matrices by solvent extraction and ion exchange. Following thermal neutron irradiation, ^{235}U is measured by way of fission-product decay and ^{238}U by way of the decay of ^{239}Np formed from the complete decay of ^{239}U.

1.2. This procedure is intended to supplement, rather than replace, both mass spectrometry and alpha spectrometry for uranium ratio determination in environmental samples. It is more precise than alpha spectrometry, and more cost-effective for large numbers of samples than thermal ionization mass spectrometry. Recent development of inductively coupled plasma mass spectrometry may render this neutron-activation-based procedure less cost-effective.

2. Sensitivity

2.1. Uranium-235/Uranium-238 ratios in the range of 0.0001 to 190 can be measured.

2.2. About 20 μg of total uranium is required in the final separated sample for an accurate determination.

3. Accuracy and Precision

3.1. Accuracy and precision are a function of the isotopic ratio. At the extreme limits of the procedure's range, ± 10% can be maintained on certified standards. For $^{235}U/^{238}U$ ratios in the range of 0.004 to 100, ± 5% can be maintained on certified standards.

3.2. Performance data for $^{235}U/^{238}U$ in spiked water samples.

EM-9 Value			Certified Value
0.0036	±	0.0002	0.0036
0.0047	±	0.0001	0.0047
0.0071	±	0.0001	0.0073 (natural)
1.010	±	0.0060	1.014
11.77	±	0.35	11.36

3.3. Performance data for $^{235}U/^{238}U$ in silicate materials.

Material	EM-9 Value			Certified Value
NBS 610	0.0025	±	0.0002	0.00238
NBS 612	0.0023	±	0.0001	0.00239
USGS GXR-1	0.0073	±	0.0003	0.0073 (natural)
CCRMP SO-1	0.0074	±	0.0001	0.0073 (natural)
SO-2	0.0075	±	0.0001	0.0073 (natural)
SO-4	0.0074	±	0.0002	0.0073 (natural)
DL-1	0.0071	±	0.0005	0.0073 (natural)

4. Interferences

4.1. Both Na and Br have activation products with half-lives comparable to ^{239}Np and the ^{235}U fission products of interest. Both Na and Br are common in environmental materials. Bromine is not extracted during the solvent extraction and the sodium is not retained during anion exchange. It is important to minimize the Na and Br blanks in the material on which the preseparated uranium solution is evaporated for neutron irradiation.

5. Collection and Storage of Samples

5.1. Water samples should be immediately filtered and acidified to 1% with concentrated HCl.

5.2. There are no special collection and storage requirements for geologicals.

6. Apparatus

6.1. Graduated cylinders: 25-mL, 1- and 2-L.

6.2. Bottles: 500-mL, polyethylene.

6.3. Stirring bars: 1.5 in., Teflon-coated.

6.4. Beakers: 100-, 250-, and 1000-mL.

6.5. Hot plates: magnetic stirring, Corning Model No. PC-351.

6.6. Beakers: 600-mL, Teflon.

6.7. Separatory funnels: 250-mL, with extra stopcocks.

6.8. Rack: to hold 4 to 6 separatory funnels.

6.9. Timer: equipped with a second hand.

6.10. Transfer pipettes.

6.11. Wash bottles: 500-mL, polyethylene.

6.12. Plastic wrap: for covering beakers.

6.13. Ion exchange columns: glass, typically around 197 mm long by 7.0 mm i.d. with a 100-mL reservoir at the top and a tip tapered to 2 mm i.d. (see Fig. 1).

6.14. Rack for holding several columns.

6.15. Glass wool.

6.16. Polycarbonate film.

6.17. Micro weigh boats.

6.18. Automatic pipettor: 3-mL.

6.19. Pipettes: 20-μL, Eppendorf.

6.20. Fume hood.

6.21. Small irradiation containers: conical tip, size 00, polyethylene, Beem capsules, Ladd Research Industries, Burlington, VT.

6.22. Reactor irradiation rabbits: 4-mL, polyethylene.

6.23. Thermal neutron irradiation facility: Omega West Reactor.

6.24. Tongs.

6.25. Gamma-ray spectrometer: equipped with high-resolution Ge(Li) detector.

7. Reagents

7.1. Nitric acid (concentrated, reagent-grade).

7.2. Nitric acid (7.2 M). Dilute 2750 mL of concentrated HNO_3 to 6 L with deionized water.

7.3. Nitric acid (0.1 M). Dilute 13 mL of 7.2 M HNO_3 to 1000 mL with deionized water.

7.4. Acetic acid (concentrated, reagent-grade).

7.5. Ammonium acetate.

7.6. Anion exchange resin. Chelex-100, 100-200 mesh, sodium form, Bio-Rad Laboratories.

7.7. Hydrofluoric acid (concentrated 48%, reagent-grade).

7.8. Hydrochloric acid (concentrated, reagent-grade).

7.9. Hydrochloric acid (8 M). Dilute 667 mL of concentrated HCl to 1000 mL with deionized water.

7.10. Hydrochloric acid (1 M). Dilute 83 mL of concentrated HCl to 1 L with deionized water.

7.11. Perchloric acid (concentrated 70%, reagent-grade).

7.12. Hydrogen peroxide (30%).

7.13. Ammonium nitrate crystals.

7.14. Ammonium nitrate solution (saturated). Add a large excess of ammonium nitrate crystals to deionized water.

7.15. Hexone (4-methyl-2-pentanone).

7.16. Cleaning solution. Prepare a 50:50 mixture of concentrated HNO_3 and concentrated HCl.

NOTE: When preparing the acid cleaning solution, always add the densest liquid last (in this case HNO_3) and stir.

7.17. Anion exchange resin. AG 1-X8, 100-200 mesh, chloride form. Bio-Rad Laboratories. Prepare resin for use by soaking the resin with deionized water and storing in a squeeze bottle.

8. Calibration and Standards

8.1. Gamma-ray spectrometer calibration technique is described in Sec. 8 of Method No. ER130.

8.2. Standard preparation.

8.2.1. National Institute of Standards and Technology (NIST) Uranium Isotopic Standards U-0002 through U-970 and Standard Reference Material (SRM) 950b (Uranium Oxide) are used exclusively for the preparation of standard solutions. The isotopic ratios for these standards are listed below.

NIST SRM	$^{235}U/^{238}U$	NIST SRM	$^{235}U/^{238}U$
U-0002	0.000176	U-200	0.251
U-005	0.00492	U-350	0.546
NBS 950b	0.00725	U-500	0.9997
U-010	0.0101	U-750	3.166
U-015	0.0156	U-800	4.266
U-020	0.0208	U-850	6.148
U-030	0.0314	U-900	10.375
U-050	0.0528	U-930	17.349
U-100	0.1136	U-970	186.78
U-150	0.181		

8.2.2. Dissolve 117-mg portions of U_3O_8 of the various isotopic compositions in 10 mL of concentrated HNO_3 in new 50-mL beakers on a hot plate.

8.2.2.1. Dilute to 100 mL in volumetric flasks with high-purity distilled water. Stock solutions are now 1000 μg/g total uranium.

8.2.2.2. Discard beakers in the radioactive waste container to avoid any possibility of isotopic cross-contamination.

8.2.3. Isotopic standards intermediate to those available from NIST can be prepared by mixing known volumes of the stocks prepared in Step 8.2.2. For example, a depleted uranium standard with $^{235}U/^{238}U = 0.0018$ (typical of residue from DOE enrichment facilities) can be made by mixing 1 part NBS 950b stock with 3 parts NIST U-0002 stock.

8.2.4. Place 5- by 5-cm polycarbonate film squares (cut from rolls of "unpunched" Nuclepore filter film) in small polyethylene weighing boats and pipette 1 mL of high-purity distilled water onto the film. Add 25 μL of 1000-μg/g uranium isotopic standard solutions to the water and let dry.

8.2.5. Roll up each dry standard and insert it into a small Beem vial. Intersperse two standards of differing isotopics among each six samples. This yields two 4-mL rabbits for simultaneous irradiation. Each irradiation must have a set of standards.

9. Procedure

9.1. Quality control materials.

9.1.1. Most natural matrix materials from NIST, the United States Geological Survey (USGS), and the Canadian Certified Reference Materials Project (CCRMP) are assumed to be of natural isotopic composition and may be used directly.

9.1.2. NIST SRMs 610 to 616 (Trace Elements in Glass) contain depleted uranium. The isotopics are specified on the certificates. These make excellent QC materials for the depleted end of the spectrum.

9.2. Sample preparation.

9.2.1. Water samples.

9.2.1.1. Since most natural waters have uranium concentrations of less than 10 μg/L, a 30-L sample is required.

9.2.1.2. Uranium is preconcentrated from this 30-L volume by anion exchange of the UO_2 complex on Chelex-100.

9.2.1.3. Place a plug of glass wool into the bottom of a labeled anion exchange column. Slurry Chelex-100 with distilled water and fill the column with a 1- to 2-in. resin bed. Wash the column with 10 column volumes of high-purity distilled water to remove any extraneous uranium.

9.2.1.4. Buffer each water sample with 20 g of ammonium acetate and 25 mL of concentrated acetic acid.

9.2.1.5. Siphon water samples through Chelex-100 columns at approximately 2 mL/min. Siphoning provides for largely unattended operation.

9.2.1.6. Elute uranium from Chelex-100 columns with 100 mL of 1 N HCl. Cover the beaker and proceed to Step 9.4.

9.2.2. Geological sample dissolution.

9.2.2.1. Weigh a 10-g aliquot of the soil sample into a 500-mL polyethylene bottle.

9.2.2.2. Add 200 mL of concentrated HNO_3.

CAUTION: Carefully add the first few drops of HNO_3 because carbonate soils react vigorously.

9.2.2.3. Add 200 mL of 48% HF.

CAUTION: Work in a fume hood. Hydrofluoric acid is extremely hazardous. Wear rubber gloves, eye protection, and a lab coat. Completely clean up all spills and wash thoroughly after using HF.

9.2.2.4. Place a 1.5-in. Teflon-coated stirring bar in the bottle and cap loosely to permit generated gases to escape (principally SiF_4 and nitrous oxides).

9.2.2.5. Place the bottle in a 1-L beaker of water on a Corning Model No. PC-351 hot plate set at "2" to allow for overnight unattended operation. Stir the sample overnight while heating.

9.2.2.6. Transfer contents of the polyethylene bottle into a 600-mL Teflon beaker and boil the mixture to dryness.

9.2.2.7. While the sample is drying, rinse the bottle with 200 mL of concentrated HCl. Save the HCl rinse until Step 9.2.2.6 is completed.

9.2.2.8. Pour the HCl rinse into the Teflon beaker after the HNO_3 has been evaporated. Retrieve the stirring bar and discard the polyethylene bottle.

9.2.2.9. Evaporate the mixture in the Teflon beaker to approximately 10 mL.

9.2.2.10. Add 100 mL of concentrated HNO_3 and boil to remove the HCl.

9.2.2.11. Cautiously add 30% H_2O_2 a few drops at a time to oxidize any organic residue. Add HNO_3 and H_2O_2 until the solution is light yellow and clear.

9.2.2.12. Evaporate the solution until the first sign of precipitation appears. Depending on the sample, the precipitate forms when approximately 25-50 mL of solution remains.

9.2.2.13. Oxidize the sample by adding 35-50 mL of concentrated $HClO_4$.

9.2.2.14. Take the mixture to dryness on high heat.

CAUTION: Hot $HClO_4$ needs **constant** attention.

9.2.2.15. To dissolve the residue, add a few drops of concentrated HCl to the beaker followed by 100 mL of 7.2 N HNO_3.

9.2.2.16. After the solution cools, cover the beaker and set aside for the hexone extraction, Step 9.3.

9.3. Hexone extraction.

9.3.1. Fill a labeled 250-mL separatory funnel with ammonium nitrate crystals (enough to fill a 100-mL beaker about 3/4 full).

9.3.2. Transfer the preconcentrated or dissolved sample to the separatory funnel with enough washes of 7.2 M HNO_3 to bring the final volume to approximately 100 mL.

9.3.3. Add 50 mL of hexone and shake for 3 min, venting the funnel occassionally to release the vacuum which occurs as the solution cools.

If the ammonium nitrate dissolves completely, add more to keep the solution saturated.

9.3.4. Place the separatory funnel in a rack and allow the phases to separate.

9.3.5. Transfer the organic (top) phase containing the U to a clean, labeled, 250-mL separatory funnel using a transfer pipette.

9.3.6. Repeat Steps 9.3.3 to 9.3.5 twice, combining the hexone phases.

9.3.7. Discard the aqueous phase and drain off the additional aqueous phase that may have separated from the hexone.

9.3.8. Add 50 mL of saturated ammonium nitrate solution to the separatory funnel and shake for no more than 30 s. See note in Step 9.3.10.

9.3.9. Allow the phases to separate.

9.3.10. Quickly drain the aqueous (bottom) phase and discard.

NOTE: If the saturated ammonium nitrate is warmer than the hexone phase it is added to, the crystals will probably precipitate. If this happens, you will need to transfer the organic phase into another clean container with a transfer pipette, as was done in Step 9.3.5, instead of draining off the aqueous phase.

9.3.11. Add 50 mL of 0.1 M HNO_3 and shake for 3 min.

9.3.12. Allow the phases to separate.

9.3.13. Drain the aqueous phase containing the uranium into a clean, 250-mL beaker that has been labeled with the sample number.

9.3.14. Repeat Steps 9.3.11 to 9.3.13 twice, combining the aqueous phases.

9.3.15. Stabilize the solution by adding 10 mL of concentrated HCl.

9.3.16. Cover the beaker with plastic wrap and set aside until ready for Step 9.3.19.

9.3.17. Discard used hexone in a beaker reserved for the purpose and dispose of according to proper waste disposal practices.

9.3.18. Rinse the separatory funnels with methanol and deionized water prior to immersing for a few seconds in a 50:50 mix of HCl and HNO_3 cleaning solution. Rinse with deionized water.

9.3.19. Uncover the sample and evaporate to dryness.

9.3.20. Add 5-10 mL of concentrated HNO_3 and boil to remove the HCl.

CAUTIOUSLY add 30% H_2O_2 a few drops at a time to oxidize any organics. The presence of organics is indicated by a brown residue. Add HNO_3 and H_2O_2 until the solution is light yellow and clear.

9.3.21. Again evaporate the solution to dryness and bring the sample up in 5 mL of concentrated HCl. Cover the beaker with plastic wrap until ready for Step 9.4.

9.4. Anion exchange separation.

9.4.1. Place a plug of glass wool into the bottom of a labeled anion exchange column and fill the column with 1 to 2 in. of AG 1-X8 anion exchange resin (100-200 mesh, chloride form). Wash the column with 10 column volumes of high-purity distilled water to remove any extraneous uranium.

9.4.2. Wash the column reservoir with 2 to 3 column volumes of 8 M HCl.

9.4.3. When the liquid is approximately 0.5 cm above the resin bed, slowly pour the sample into the column and let the solution drain to the top of the resin bed into a clean, labeled, 100-mL beaker.

9.4.4. Rinse the sample beaker with approximately 1 column volume of 8 M HCl. Pour the solution into the column reservoir, and let the solution drain to the top of the resin bed into the beaker used in Step 9.4.3.

9.4.5. Rinse the column with 1 to 2 column volumes of 8 M HCl and drain. Save the eluent.

9.4.6. Place labeled 5- by 5-cm polycarbonate film squares over small polyethylene weighing boats and place under the columns to collect the column effluent.

9.4.7. Carefully, without stirring up the resin, add 3 mL of high-purity distilled water to elute the uranium from the column onto the polycarbonate film.

9.4.8. Set the polycarbonate film units aside to air dry.

9.4.9. Rinse the column with 2 to 3 column volumes of high-purity distilled water, rinsing the column reservoir thoroughly.

9.4.10. Relabel the columns and repeat Steps 9.4.2 to 9.4.9 until all samples are completed.

9.4.11. Discard the used resin.

9.4.12. Prepare the irradiation standards as described in Step 8.2.4. Do not perform any chemistry on these standards.

9.5. Sample packaging and irradiation.

9.5.1. Fold each square into halves, then thirds, roll up, and insert into labeled small Beem vials.

9.5.2. Place 3 samples or QCs and one standard into each rabbit so that when the rabbits are paired cap-to-bottom, the 2 standards will be next to each other in the center of the pair. Rabbits are inserted into the pneumatic irradiation tubes with the cap end out. Therefore, place one standard at the cap of the first rabbit in the pair, and the other standard at the bottom of the second rabbit. Indicate the pairing and order of irradiation on the reactor irradiation request form (Fig. 2).

9.5.3. Irradiate rabbits in pairs for 20 to 30 min in the thermal column facilites TCR-2 or TCR-4 at the Omega West Reactor.

9.5.4. Return the irradiated samples to the laboratory and unpack, placing each Beem vial into its own clean rabbit. Be sure to note which standard belonged to which irradiated rabbit. Handle all rabbits and Beem vials with tongs and plastic gloves.

9.6. Nuclear counting.

9.6.1. The samples must be counted within 24 h of irradiation.

9.6.2. Count all samples, QCs, and NIST standards that were irradiated together in the same geometry on the same crystal.

9.6.3. Count the samples for 1000 s each at a spectrometer energy calibration of 1 keV/channel. Check the analyzer dead time for each count. Ensure that it was less than 10%.

9.6.4. Store all gamma-ray spectra on VAX disc for off-line data reduction. Record the filename and all counting data in a Laboratory notebook.

10. Operation of Equipment

10.1. Reactor operation and sample irradiation are the responsibilities of Group INC-5.

10.2. See gamma-ray spectrometry instrument procedure (Method No. ER130).

11. Calculations

11.1. The 278-keV line from ^{239}Np and the 743-keV line from ^{97}Zr are used for quantitation. These gamma-ray peaks are numerically integrated and their peak areas are corrected for decay to the end of the irradiation. The ratio of the corrected areas is taken and compared to the corresponding ratios of the standards.

11.1.1. Integrate the 278- and 743-keV lines in both NIST standards and in all samples for a particular run.

11.1.2. Correct each gamma-ray peak for decay from beginning-of-count back to time-out-of-reactor using the following formula.

$$B = Ae^{\lambda(t1 - t2)} ,$$

where B = decay-corrected peak area,
A = integrated peak area,
λ = decay constant (0.693/half-life of isotope),
t1 = beginning-of-count time, and
t2 = time-out-of-reactor time.

No flux corrections are required since samples and standards are irradiated simultaneously.

11.1.3. Plot the calibration curve on linear graph paper with the known $^{235}U/^{238}U$ isotope ratio on the x-axis and the decay-corrected net peak area ratio R on the y-axis (Fig. 3). Draw a straight line between the two calibration points.

$$R = B1/B2 ,$$

where B1 = decay-corrected net peak area for 743-keV ^{97}Zr, and
B2 = decay-corrected net peak area for 278-keV ^{239}Np.

11.1.4. Read the sample $^{235}U/^{238}U$ ratio from the calibration curve using the decay-corrected net peak area ratio ($^{97}Zr/^{239}Np$). If the sample peak area ratio is outside the two calibration points, do not report a value based upon extrapolation. Rerun the sample with more appropriate standards.

11.2. The 293-keV line of ^{143}Ce can be substituted for the ^{97}Zr fission product. Recent experience indicates that the precision is somewhat poorer. It is important to use a ^{235}U fission product that is not volatile. Although ^{131}I is one of the most prominent fission products, varying quantities are lost during sample irradiation, resulting in nonreproducible isotope ratios.

12. Source Materials

12.1. E. S. Gladney, R. J. Peters, and D. R. Perrin, "Determination of Uranium-235/Uranium-238 Ratio in Natural Waters by Chelex-100 Ion Exchange and Neutron Activation," *Anal. Chem.* **55**, 976 (1983).

12.2. E. S. Gladney, D. B. Curtis, D. R. Perrin, J. W. Owens, and W. E. Goode, "Nuclear Techniques for the Chemical Analysis of Environmental Materials," Los Alamos Scientific Laboratory report LA-8192-MS (1980).

12.3. M. A. Gautier, E. S. Gladney, and B. T. O'Malley, "Quality Assurance for Health and Environmental Chemistry: 1985," Los Alamos National Laboratory report LA-10813-MS (1986).

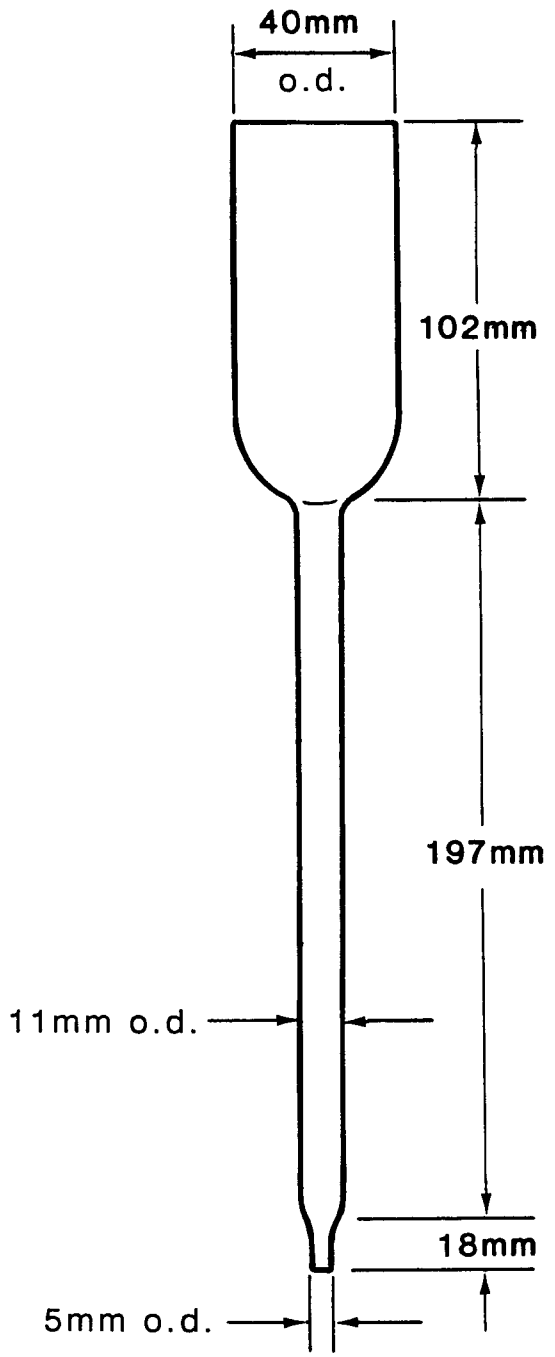

Fig. 1. Ion exchange column.

HSE-9 PROGRAM CODE:_____

MATERIAL:_____ ANALYSIS:_____ REQUESTOR:_____

LENGTH OF IRRADIATION:_____

RABBIT NUMBER	TIME IN	TIME OUT	DATE	REMARKS

Fig. 2. Reactor irradiation request form.

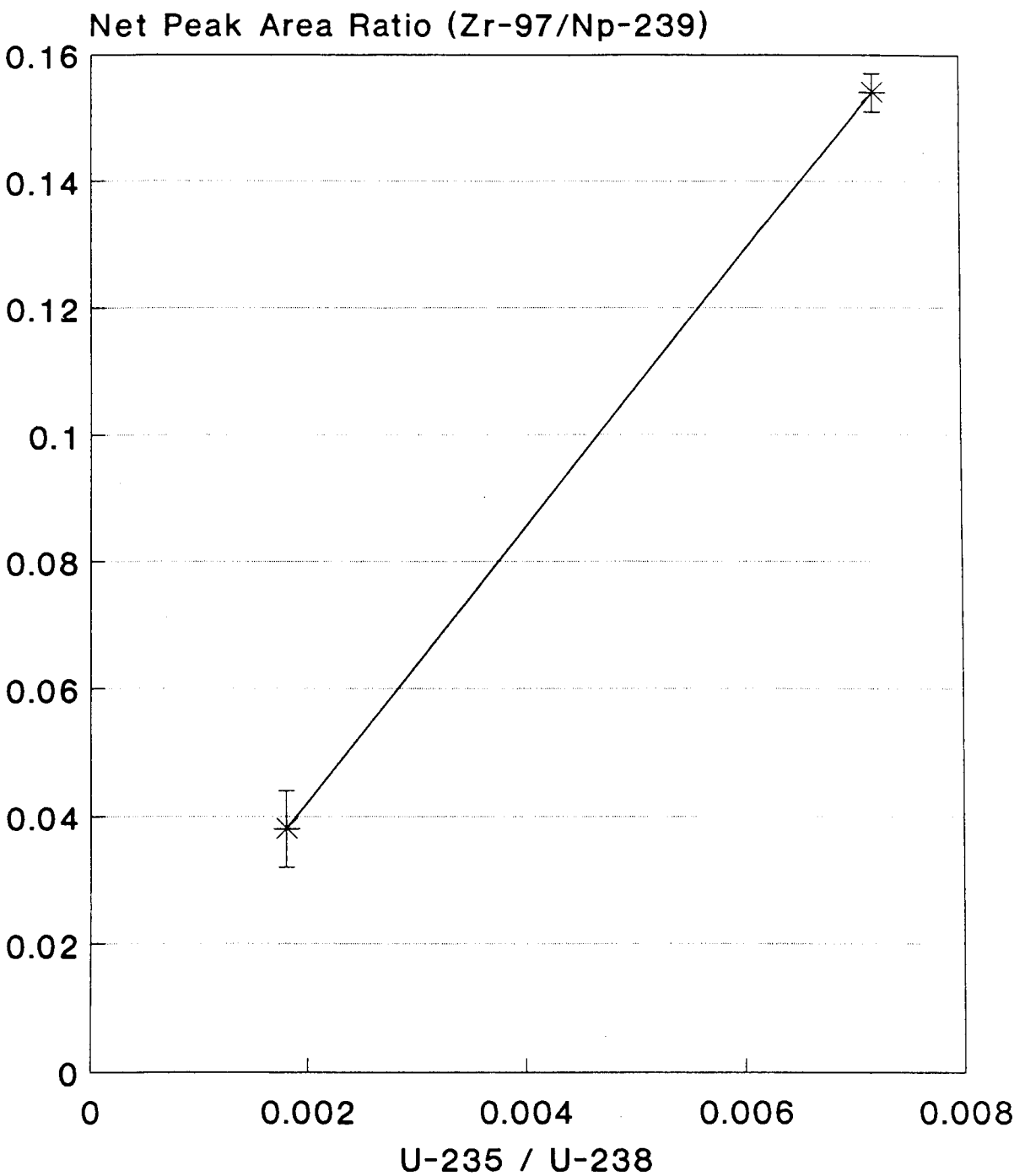

Fig. 3. Uranium isotopic ratio calibration chart.

URANIUM IN AIR FILTERS – DNA

Analyte: Uranium	**Method No.:** ER240
Matrix: Air filters	**Minimum Detectable Concentration:** 10 ng per filter
Procedure: Instrumental delayed neutron activation (DNA) analysis	**Accuracy and Precision:** 100% ± 6%
Effective Date: 01/01/84	**Authors:** Ernest S. Gladney George H. Brooks

SAFETY NOTE: Before beginning this procedure, read all of the Material Safety Data Sheets for the chemicals listed in Sec. 7. Read Sec. 4.3 of the EM-9 Safety Manual for information on personal protective clothing and equipment.

1. Principle of Method

1.1. Air particulates or industial hygiene swipe samples can be collected on almost any type of filter. Certain uranium fission products (primarily from ^{235}U) emit neutrons as their primary decay mode, with a "group" half-life of approximately 54 s. The neutrons from the samples are counted in ^{3}He detectors following a short thermal neutron irradiation.

1.2. Quantitative data on uranium concentrations are obtained by concurrent measurements of filters of known uranium content and isotopic ratio. Some assumptions concerning the uranium isotopic ratio of the samples must be made.

1.3. It is important to employ standards of the same matrix as the samples. Differences in neutron thermalization have been observed among waters, air filters, and biologicals, necessitating the use of matrix-based standards.

2. Sensitivity

2.1. Ten nanograms can normally be detected in the delayed neutron activation (DNA) system for liquid samples. The detection limit is strongly influenced by the precision of the system blank and can increase to 40 ng in the worst case observed. Saturation effects in the detector are insignificant at the 10,000-ng/filter level (see Fig. 1).

3. Accuracy and Precision

3.1. The National Institute of Standards and Technology (NIST) does not produce Standard Reference Materials (SRMs) for uranium on air filters that would permit a clear determination of the accuracy of the method. Since the detector used is geometry-independent for the 25-mL rabbit, small quantities of powdered silicates or NIST 1648 (Urban Particulate Matter) may be added to the filter substrate to produce in-house quality assurance materials. Analysis of replicate samples of this SRM (certified value of 5.5 ± 0.1 ppm) gave a mean value of 5.8 ± 0.8 ppm.

3.2. The Environmental Measurements Laboratory in New York circulates uranium air filter quality assurance materials as part of the Department of Energy Quality Assurance (DOE QA) Program. These samples cannot be accurately analyzed by DNA because they are prepared on glass fiber filters that have high levels of aluminium and sodium, which contribute to serious gamma-ray pulse pile-up losses in the neutron detector.

3.3. In-house quality assurance materials are prepared by pipetting known amounts of uranium standards onto Whatman or Millipore filters. Results for these analyses are consistently within one standard deviation of the spike concentration, which ranges from 0.1-1.0 μg/filter. Over a period of 2 y the determination of uranium in these materials had a mean recovery of 100% ± 6% on 33 measurements.

4. Interferences

4.1. Very high concentrations of fissionable Pu will create positive interference, but this has never been observed in routine air samples.

4.2. High concentrations of Th relative to U can create positive interferences since thorium fission is induced by fast neutrons. The degree of flux thermalization is very important in minimizing this source of interference. Thorium/uranium ratios of 100:1 are needed before the impact can be observed in our DNA system.

4.3. Departure of the U isotopic ratio from that assumed can create either positive or negative interferences. Uranium-238 fissions by fast neutron capture while ^{233}U fissions by thermal neutron capture, which has a different yield of delayed-neutron-emitting products. Some assumptions concerning the isotopic abundance in the samples must be made in order to calculate total uranium concentration. Uranium-235 may be reported directly with no such assumptions required.

4.4. Very large concentrations of high-cross-section isotopes with short-lived activation products can also interfere with uranium determination. High levels of Al, Na, or Cl produce intense gamma-ray fluxes in the detectors, which can

eventually overwhelm the neutron peak by gamma-pulse pile-up. The problem cannot be corrected for, but the spectrum can be monitored for its occurrence and affected data can be rejected. Certain types of air filters (e. g. glass fiber) cannot be analyzed by the DNA technique due to this phenomenon.

4.5. Detector saturation may occur at high concentrations of uranium. This effect is < 1% up to 10 μg/filter of natural isotopic uranium (see Fig. 1).

5. Collection and Storage of Samples

5.1. Use any collection technique that avoids using glass fiber filters. Whatman, Nuclepore, Millipore, or Microsorban filters have been analyzed successfully. Avoid fluoropore filters because the intense radiation from the short-lived fluorine in the filter will probably interfere.

5.2. Store filters in containers that avoid contamination of the filters after collection.

6. Apparatus

6.1. Screw-top lids from polyethylene bottles: 1.75-in. diam, used to support filters during preparation of standards.

6.2. Filter paper: 4.25-cm, Whatman No. 2, used for standard preparation.

6.3. Irradiation rabbits: 25-mL, screw-cap, polyethylene scintillation vials, Packard.

6.4. Nuclear reactor: equipped with a "liquid" delayed neutron facility. The characteristics of the Los Alamos facility are described in detail in Source Material 12.5.

6.5. Pipettes with disposable tips: 50-μL, 1- and 5-mL.

6.6. Hot plate.

6.7. Flasks: 100-mL, volumetric, new.

6.8. Beakers: 50-mL, Pyrex, new.

7. Reagents

7.1. Nitric acid (concentrated, highest purity available).

7.2. Distilled water (highest purity available).

8. Calibration and Standards

8.1. Calibrate the DNA facility by concurrent analysis of known quantities of uranium solution pipetted onto filter paper.

8.2. Standard preparation.

8.2.1. Exclusively use NIST Uranium Isotopic Standards U-0002 through U-970 and NBS SRM 950b (Uranium Oxide, U_3O_8) for the preparation of standard solutions.

8.2.2. Dissolve 117-mg portions of U_3O_8 of the various isotopic compositions in 10 mL of concentrated HNO_3 in new 50-mL beakers on a hot plate. Dilute to 100 mL in volumetric flasks with high-purity distilled water. Stock solutions are now 1,000 μg/g total uranium. Discard beakers in radioactive waste to avoid any possibility of isotopic cross-contamination.

8.2.3. Prepare additional dilutions of the concentrated stock just before actual filter standard preparation.

8.2.3.1. Dilute 2 mL of the stock solution to 100 mL with distilled water in a volumetric flask (2 μg/g total U).

8.2.3.2. Dilute 10 mL of the stock to 100 mL with distilled water in a volumetric flask (10 μg/g total U).

8.2.4. Place 4.25-cm Whatman No. 2 filter papers on 1.75-in. screw-top caps with only the outside portion of the filters touching the cap. Use at least 3 filters for each concentration of standard to be made.

8.2.5. Pipette 50 μL of 2-μg/g and of 10-μg/g isotopic uranium solutions evenly on separate filters. This aliquot is equal to 100 ng total U for the first set and 500 ng total U for the second set. Different isotopic ratios are prepared from different stock solutions of NIST uranium isotopic standards.

8.2.6. Dry the filters for at least 2 h.

8.2.7. Roll up each filter and place in a 25-mL irradiation rabbit.

9. Procedure

9.1. Sample preparation.

9.1.1. Roll up air filters and insert them into 25-mL irradiation rabbits.

9.2. Quality control sample preparation.

9.2.1. Weigh approximately 30 mg of NIST SRM 1648 (Urban Particulate Matter) onto a blank filter of the same type used for the samples.

9.2.2. Roll up the QC air filter and insert it into a 25-mL rabbit.

9.2.3. Quality control samples should equal approximately 10% of the total samples analyzed.

9.3. Blank preparation.

9.3.1. Run at least 3 filter blanks, of the type used for preparation of the standards, with each set of standards.

9.3.2. Run at least 5 filter blanks, of the type used for the samples, with each irradiation set in order to generate a limit of detection for that sample filter type.

9.3.3. Since the standards may be prepared on a different type of filter than the samples are taken on, the two different blank determinations suggested above may be required.

9.4. Sample submission and irradiation.

9.4.1. Stagger the blanks, QCs, and standards evenly throughout the sample set.

9.4.2. Transport the sample set to the Omega West Reactor (TA-2) and submit them directly to the DNA facility operator in Group INC-5. List any special instructions, program code, number of samples, etc. For filter analyses, request that the sample weights in the INC-5 DNA data reduction code be set to 1.00 g, rather than having the filters weighed by the operator.

9.4.3. Sample irradiation and counting are conducted by INC-5 in the "liquid" DNA facility as described in Source Material 12.5. All data reduction is done on-line by INC-5's PDP 11/60. Data are mailed directly to EM-9.

9.4.4. Return the samples to our laboratory after they have been allowed to decay for two weeks. Discard the blanks in radioactive waste. Save the samples until the customer has accepted the data.

9.4.5. Standards and quality control samples may be reused. A two-week decay period is recommended to minimize personnel radiation exposure, but there is no nuclear chemical barrier to immediate reuse if necessary.

10. Operation of Equipment

10.1. Equipment operation is the responsibility of INC-5.

11. Calculations

11.1. The general form of the data received from INC-5 is shown below. If a sample weight of 1.0 g is used, the final result is in ng/filter rather than ppb as stated. The result provided by INC-5 must be recalculated due to highly variable system blanks and the absence of either daily standardization or quality control. Accurate daily determination of the system blank is required because this becomes an important source of error as the detection limit is approached. Most sample filters have uranium concentrations near the system detection limit.

OUTPUT FROM INC-5

Sample	Weight	Peak	Valley	Flux	ppb
861069	1.00	947.	24.	5308	627.6
861070	1.00	1336.	29.	5415	889.6
861071	1.00	403.	120.	5408	231.7

11.2. The peak/valley ratio from the INC-5 data must be calculated for each sample. Ratios that fall below 5.0 indicate excessive gamma-pulse pile-up. Such samples will have to be either diluted and rerun or analyzed by another analytical technique. Data with ratios between 5.0 and 10.0 will have a cautionary note placed in the comment field of the database indicating that the results may be suspect. Data with ratios greater than 10.0 should be accurate.

11.3. Calculate the system calibration factor from the following equation:

$$K = \frac{A \times F}{(P - B)},$$

where K = calibration factor (an average K will usually be calculated using multiple standards),
A = concentration of U standard (μg/filter),
F = reactor flux during irradiation of the standard,
P = gross counts in neutron peak of the standard, and
B = average gross counts in neutron peak of blanks.

11.4. Final U results are calculated by INC-5 using the following formula:

$$U = \frac{(P - B) \times K}{W \times F},$$

where U = concentration of uranium in the sample (μg/L),
P = gross counts in neutron peak of sample,
B = average gross counts in neutron peak of blanks,
W = sample volume (L),
F = reactor flux during irradiation of the sample, and
K = system calibration factor from Step 11.3.

11.5. Overall uncertainty is reported as the propagated sum of uncertainties from individual parts of the calculation process.

11.5.1. Calculate the counting uncertainty as follows:

$$D = \frac{\sqrt{P + B}}{P},$$

where D = counting uncertainty in total counts,
P = gross counts in the neutron peak of sample, and
B = average gross counts in the neutron peak of blanks.

11.5.2. Calculate the uncertainty in the calibration factor as follows:

E = standard deviation among all K factors for the same run,

where E = calibration uncertainty, and
K = calibration factors from Step 11.3.

11.5.3. Calculate the uncertainty in the reactor flux as follows:

$$H = \frac{\sqrt{F}}{F},$$

where H = uncertainty in reactor flux, and
F = reactor flux.

11.5.4. The final propagated uncertainty is calculated as follows:

$$V = U \times \sqrt{D^2 + E^2 + H^2} \quad ,$$

where V = overall uncertainty (μg/L),
U = result from Step 11.4 (μg/L),
D = counting uncertainty,
E = calibration factor uncertainty, and
H = reactor flux uncertainty.

11.6. All sample calculations assume natural uranium isotopic abundance unless otherwise specified by the customer. In the latter case, the $^{235}U/^{238}U$ ratio must be determined by another analytical method and the data adjusted as follows:

$$T = \frac{I}{R} \times U \quad ,$$

where T = adjusted total uranium concentration in the sample (μg/g),
I = $^{235}U/^{238}U$ ratio in natural materials (0.0072),
R = $^{235}U/^{238}U$ ratio measured in the sample, and
U = uranium concentration in the sample from Step 11.4 (μg/L).

12. Source Materials

12.1. M. A. Gautier, E. S. Gladney, and B. T. O'Malley, "Quality Assurance for Health and Environmental Chemistry: 1985," Los Alamos National Laboratory report LA-10813-MS (1986).

12.2. "American National Standard for Performance Criteria for Radiobioassay," draft, American National Standards Institute, ANSI N13.30 (1989).

12.3. Currie, L. A., "Limits for Qualitative Detection and Quantitative Determination," *Anal. Chem.* **40**, 586-593 (1968).

12.4. S. Amiel, "Analytical Applications of Delayed Neutron Emission in Fissionable Elements," *Anal. Chem.* **34**, 1683-1692 (1962).

12.5. S. Amiel, J. Gilet, and D. Heymann, "Uranium Content of Chondrites by Thermal Neutron Activation and Delayed Neutron Counting," *Geochim. Cosmochim. Acta* **31**, 1499-1503 (1967).

12.6. G. R. Keepin, T. F. Wimett, and R. K. Zeigler, "Delayed Neutrons from Fissionable Isotopes of Uranium, Plutonium, and Thorium," *Phys. Rev.* **107**, 1044-1049 (1957).

12.7. S. J. Balestrini, J. P. Balagna, and H. O. Menlove, "Two Specialized Delayed Neutron Detector Designs for Assays of Fissionable Elements in Water and Sediment Samples," *Nucl. Instru. Methods* **136**, 521-524 (1976).

12.8. E. S. Gladney, D. B. Curtis, D. R. Perrin, J. O. Owens, and W. E. Goode, "Nuclear Techniques for the Chemical Analysis of Environmental Materials," Los Alamos Scientific Laboratory report LA-8192 MS (1980).

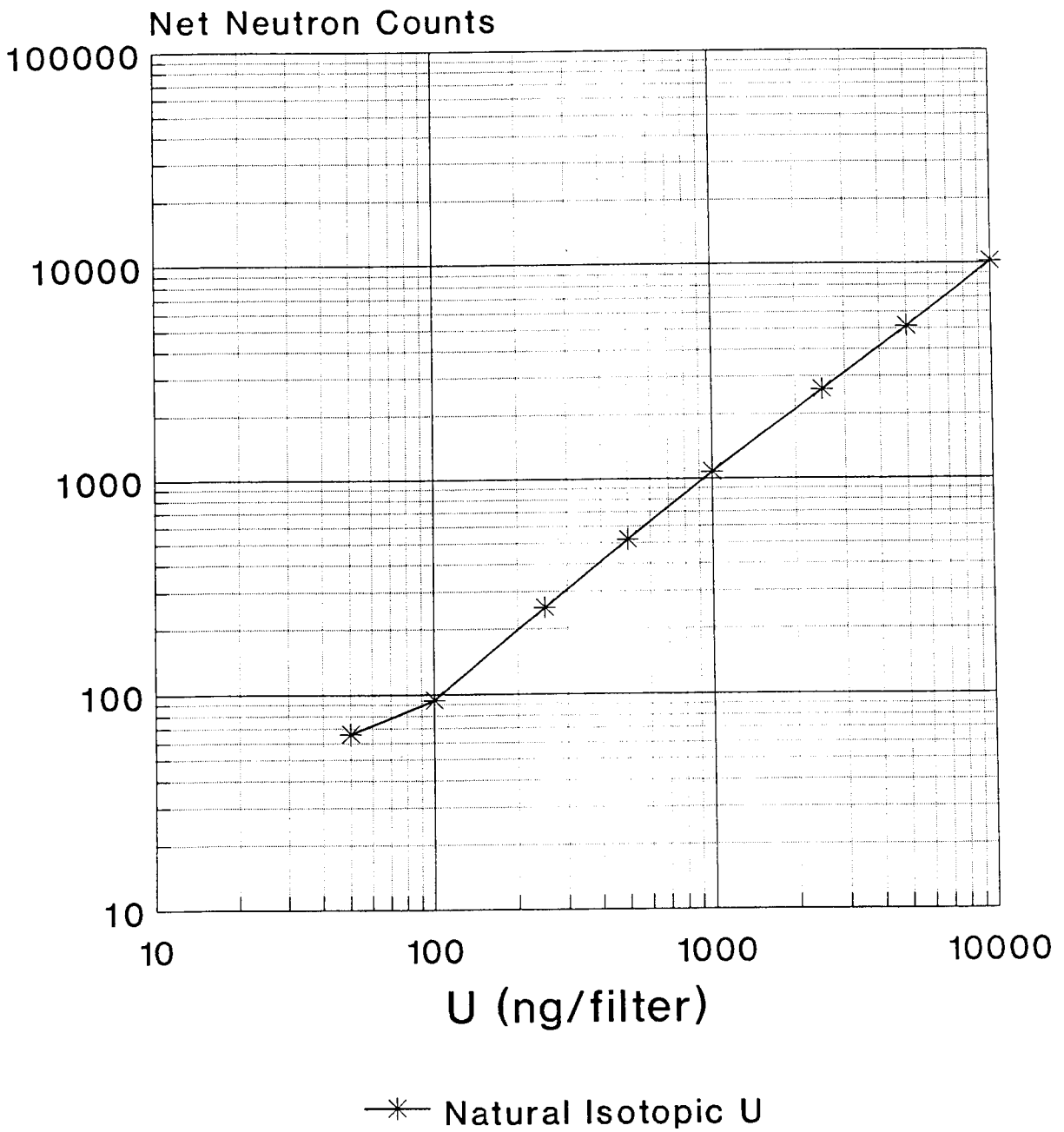

Fig. 1. Total delayed neutron counts vs uranium content of air filters.

OUTPUT FROM INC-5					
Run	Sample	Weight	Counts	Flux	ppb
1	1633a	1.88	8206.	1803.	10.32
2	1633b	2.16	9566.	1801.	10.49
3	1633c	2.32	10125.	1801.	10.34
4	11976	3.31	4850.	1806.	3.45
5	11977	3.36	4850.	1806.	3.40
6	11978	3.08	4126.	1805.	3.15

11.2. The peak/valley ratio from the INC-5 data must be calculated for each sample. Ratios that fall below 5.0 indicate excessive gamma-pulse pile-up. Such samples will have to be either diluted and rerun or measured by another analytical technique. Data with ratios between 5.0 and 10.0 will have a cautionary note placed in the comment field of the database indicating that the results may be suspect. Data with ratios greater than 10.0 should be accurate.

11.3. Calculate the system calibration factor from the following equation:

$$K = \frac{A \times W \times F}{(P - B)} ,$$

where K = calibration factor (an average K will usually be calculated using multiple standards),
A = concentration of U standard (μg/g),
W = weight of standard (g),
F = reactor flux during irradiation of the standard,
P = gross counts in neutron peak of the standard, and
B = average gross counts in neutron peak of blanks.

11.4. Final U results are calculated by INC-5 using the following formula:

$$U = \frac{(P - B) \times K}{W \times F} ,$$

where U = concentration of uranium in the sample (μg/g),
P = gross counts in neutron peak of sample,
B = average gross counts in neutron peak of blanks,

W = sample weight (g),
F = reactor flux during irradiation of the sample, and
K = system calibration factor from Step 11.3.

11.5. Overall uncertainty is reported as the propagated sum of uncertainties from individual parts of the calculation process.

11.5.1. Calculate the counting uncertainty as follows:

$$D = \sqrt{P + B} \quad ,$$

where D = counting uncertainty in total counts,
P = gross counts in the neutron peak of sample, and
B = average gross counts in the neutron peak of blanks.

11.5.2. Calculate the uncertainty in the calibration factor as follows:

E = standard deviation among all K factors for the same run,

where E = calibration uncertainty and
K = calibration factors from Step 11.3.

11.5.3. Calculate the uncertainty in sample weight as follows:

$$G = \frac{X}{W} \quad ,$$

where G = uncertainty in sample weight,
X = minimum weight that the analytical balance can sense (g), and
W = sample weight (g).

11.5.4. Calculate the uncertainty in the reactor flux as follows:

$$H = \frac{1}{\sqrt{F}} \quad ,$$

where H = uncertainty in reactor flux and
F = reactor flux.

11.5.5. The final propagated uncertainty is calculated as follows:

$$V = U \times \sqrt{D^2 + E^2 + G^2 + H^2} \quad ,$$

where V = overall uncertainty (μg/g),
U = result from Step 11.4 (μg/g),
D = counting uncertainty,
E = calibration factor uncertainty,
G = sample weight uncertainty, and
H = reactor flux uncertainty.

11.6. All sample calculations assume natural uranium isotopic abundance unless otherwise specified by the customer. In the latter case, the $^{235}U/^{238}U$ ratio must be determined by another analytical method and the data adjusted as follows:

$$T = \frac{I}{R} \times U \quad ,$$

where T = adjusted total uranium concentration in the sample (μg/g),
I = $^{235}U/^{238}U$ ratio in natural materials (0.0072),
R = $^{235}U/^{238}U$ ratio measured in the sample, and
U = uranium concentration in the sample from Step 11.4 (μg/g).

12. Source Materials

12.1. S. Amiel, "Analytical Applications of Delayed Neutron Emission in Fissionable Elements," *Anal. Chem.* **34**, 1683-1692 (1962).

12.2. S. Amiel, J. Gilet, and D. Heymann, "Uranium Content of Chondrites by Thermal Neutron Activation and Delayed Neutron Counting," *Geochim. Cosmochim. Acta* **31**, 1499-1503 (1967).

12.3. G. R. Keepin, T. F. Wimett, and R. K. Zeigler, "Delayed Neutrons from Fissionable Isotopes of Uranium, Plutonium, and Thorium," *Phys. Rev.* **107**, 1044-1049 (1957).

12.4. S. J. Balestrini, J. P. Balagna, and H. O. Menlove, "Two Specialized Delayed Neutron Detector Designs for Assays of Fissionable Elements in Water and Sediment Samples," *Nucl. Instru. Methods* **136**, 521-524 (1976).

12.5. E. S. Gladney, D. B. Curtis, D. R. Perrin, J. W. Owens, and W. E. Goode, "Nuclear Techniques for the Chemical Analysis of Environmental Materials," Los Alamos Scientific Laboratory report LA-8192-MS (1980).

12.6. E. S. Gladney, D. R. Perrin, W. K. Hensley, and M. E. Bunker, "Uranium Content of Twenty-five Silicate Reference Materials," *Geostandards Newsletter* **4**, 243-246 (1980).

12.7. H. F. Steger, "Certified Reference Materials," Canadian Certified Reference Materials Project, Mineral Sciences Laboratory, Energy, Mines, and Resources, Canada report CM84-14E (1984).

12.8. M. A. Gautier, E. S. Gladney, and D. R. Perrin, "Quality Assurance for Health and Environmental Chemistry: 1984," Los Alamos National Laboratory report LA-10508-MS (1985).

12.9. M. A. Gautier, E. S. Gladney, and B. T. O'Malley, "Quality Assurance for Health and Environmental Chemistry: 1985," Los Alamos National Laboratory report LA-10813-MS (1986).

12.10. E. S. Gladney, B. T. O'Malley, I. Roelandts, and T. E. Gills, "Standard Reference Materials: Compilation of Elemental Concentration Data for NBS Clinical, Biological, Geological, and Environmental Standard Reference Materials," NBS Special Publication 260-111 (1987).

12.11. E. S. Gladney and I. Roelandts, "1987 Compilation of Elemental Concentration Data for USGS BIR-1, DNC-1, and W-2," *Geostandards Newsletter* **12**, 63-118, (1988).

12.12. E. S. Gladney and I. Roelandts, "1987 Compilation of Elemental Concentration Data for USGS BHVO-1, MAG-1, QLO-1, RGM-1, SCo-1, SDC-1, SGR-1, and STM-1," *Geostandards Newsletter* **12**, 253-362 (1988).

12.13. M. A. Gautier, E. S. Gladney, W. Moss, M. Phillips, and B. T. O'Malley, "Quality Assurance for Health and Environmental Chemistry: 1986," Los Alamos National Laboratory report LA-11114-MS (1987).

12.14. M. A. Gautier, E. S. Gladney, M. Phillips, and B. T. O'Malley, "Quality Assurance for Health and Environmental Chemistry: 1988," Los Alamos National Laboratory report LA-11637-MS (1989).

12.15. E. S. Gladney and I. Roelandts, "1988 Compilation of Elemental Concentration Data for CCRMP Soils SO-1 to SO-4," *Geostandards Newsletter* **13**, 217-268 (1989).

12.16. E. S. Gladney and I. Roelandts, "1988 Compilation of Elemental Concentration Data for USGS Geochemical Exploration Reference Materials GXR-1 to GXR-6," *Geostandards Newsletter* (in press).

12.17. E. S. Gladney and I. Roelandts, "1988 Compilation of Elemental Concentration Data for CCRMP Reference Rock Samples SY-2, SY-3, and MRG-1," *Geostandards Newsletter* (in press).

12.18. "American National Standard for Performance Criteria for Radiobioassay," draft, American National Standards Institute, ANSI N13.30 (1989).

12.19. L. A. Currie, "Limits for Qualitative Detection and Quantitative Determination," *Analytical Chemistry* **40**, 586-593 (1968).

Total Delayed Neutron Counts vs Uranium Concentration in Geological Materials

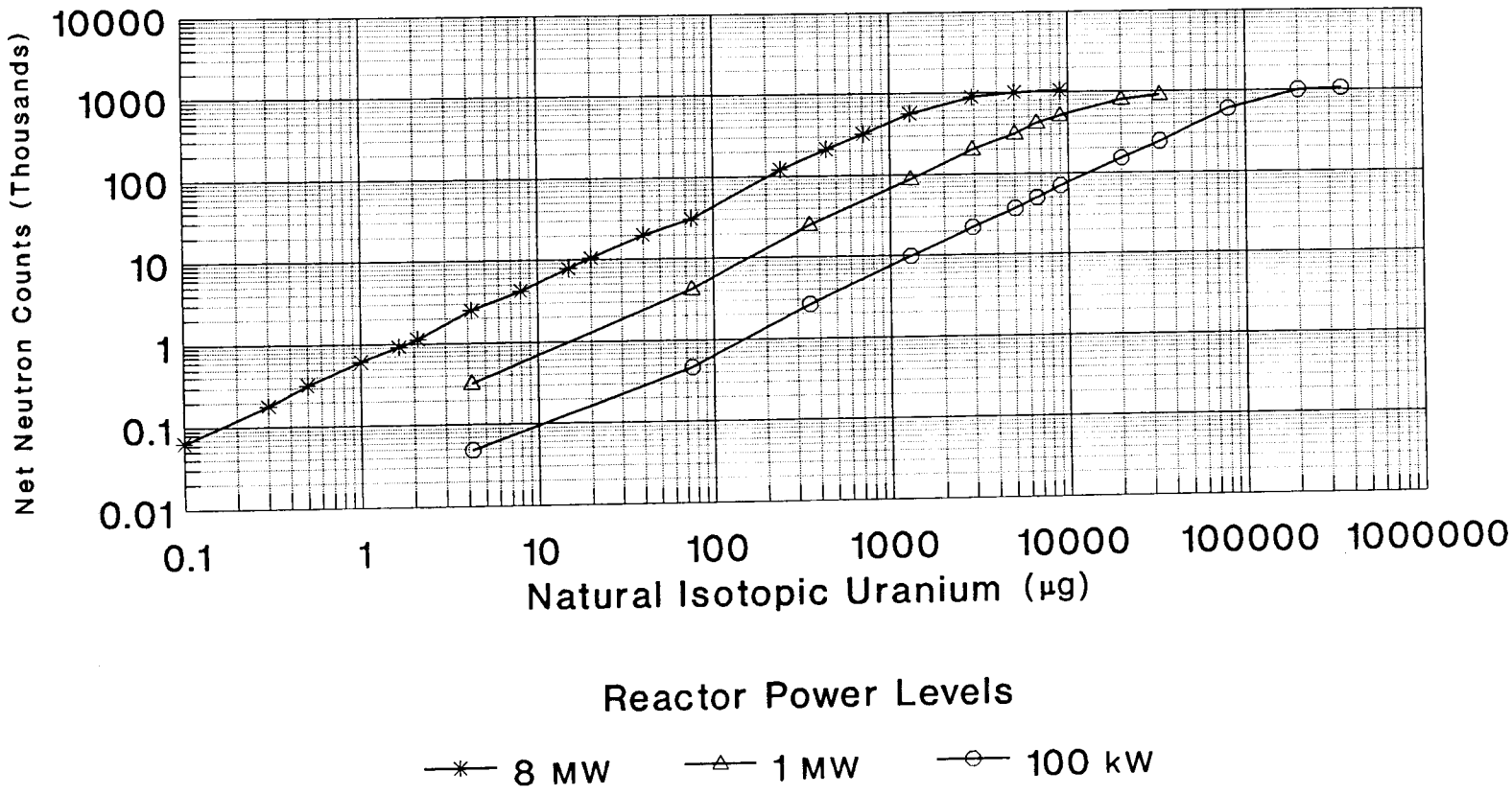

Fig. 1. Total delayed neutron counts vs uranium content of geological samples.

TABLE I. DNA MEASUREMENTS OF URANIUM IN GEOLOGICAL REFERENCE MATERIALS

Agency	Material	EM-9 (mg/g)			Certified or Consensus Value (mg/g)		
NBS	120B	125.7	±	0.6	128.4	±	0.5
	278	4.53	±	0.13	4.58	±	0.4
	688	0.32	±	0.02	0.31	±	0.02
	1633a	10.47	±	0.09	10.2	±	0.1
	1645	1.11	±	0.05	1.11	±	0.05
	1646	3.10	±	0.12	2.99	±	0.06
	4350b	2.43	±	0.05	2.4		
	4353	3.04	±	0.07	3.0		
	4355	2.75	±	0.09	3.0	±	0.5
CCRMP	DL-1	38.6	±	0.8	41	±	2
	BL-1	219	±	10	220	±	10
	BL-4	1750	±	25	1730	±	40
	BL-4A	1290	±	12	1248	±	7
	DH-1A	2610	±	46	2629	±	3
	DL-1A	112			116	±	3
	UTS-1	45	±	2	49	±	3
	UTS-2	49.2	±	0.6	56	±	2
	UTS-3	539	±	14	513	±	9
	UTS-4	1010	±	10	1010	±	19
	SY-2	284	±	8	284	±	9
	SY-3	705	±	72	650	±	55
	MRG-1	0.27	±	0.01	0.24	±	0.04
	SO-1	1.74	±	0.05	1.71	±	0.04

TABLE I. DNA MEASUREMENTS OF URANIUM IN GEOLOGICAL REFERENCE MATERIALS (cont)

Agency	Material	EM-9 (mg/g)			Certified or Consensus Value (mg/g)		
	SO-2	0.96	±	0.05	0.98	±	0.05
	SO-3	1.11	±	0.06	1.11	±	0.02
USGS	BHVO-1	0.44	±	0.07	0.42	±	0.06
	MAG-1	2.87	±	0.23	2.7	±	0.3
	QLO-1	1.93	±	0.12	1.94	±	0.12
	RGM-1	5.93	±	0.20	5.8	±	0.5
	SCo-1	3.20	±	0.15	3.0	±	0.2
	SDC-1	3.06	±	0.14	3.14	±	0.20
	SGR-1	5.52	±	0.29	5.4	±	0.4
	STM-1	8.99	±	0.16	9.06	±	0.13
	BIR-1	0.02	±	0.02	0.025		
	DNC-1	0.10	±	0.02	0.10		
	W-2	0.61	±	0.04	0.53	±	0.08
USGS	GXR-1	37.1	±	1.3	34.9	±	1.2
	GXR-2	3.34	±	0.08	2.90	±	0.06
	GXR-3	3.46	±	0.23	3.0	±	0.3
	GXR-4	6.94	±	0.30	6.20	±	0.13

URANIUM IN WATER — DNA

Analyte: Uranium	**Method No.:** ER270
Matrix: Natural and effluent waters	**Minimum Detectable Concentration:** 0.4 μg/L
Procedure: Instrumental delayed neutron activation (DNA) analysis	**Accuracy and Precision:** 100% ± 6%
Effective Date: 06/06/84	**Authors:** Ernest S. Gladney Daniel R. Perrin George H. Brooks

SAFETY NOTE: Before beginning this procedure, read all of the Material Safety Data Sheets for the chemicals listed in Sec. 7. Read Sec. 4.3 of the EM-9 Safety Manual for information on personal protective clothing and equipment.

1. Principle of Method

1.1. Aqueous samples of almost any type can be analyzed for uranium. Certain uranium fission products (primarily from ^{235}U) emit neutrons as their primary decay mode, with a "group" half-life of about 54 s. The neutrons from the samples are counted in ^{3}He detectors following a short thermal neutron irradiation.

1.2. Quantitative data on uranium concentrations are obtained by concurrent measurements of aqueous standards of known uranium content and isotopic ratio. Some assumptions concerning the uranium isotopic ratio of the samples must be made.

1.3. It is important to employ standards in the same matrix as the samples. Differences in neutron thermalization have been observed among waters, air filters, and biologicals, necessitating the use of matrix-based standards.

2. Sensitivity

2.1. Ten nanograms can normally be detected in 25-mL samples in the delayed neutron activation (DNA) system for liquid samples. The detection limit is strongly influenced by the precision of the system blank and can deteriorate to 40 ng. Saturation effects in the detector are insignificant up to the 10-mg/L (ppm) uranium level (Fig. 1).

3. Accuracy and Precision

3.1. The method is independent of sample size or shape (geometry) for 25-mL rabbits.

3.2. There are no National Institute of Standards and Technology (NIST) Standard Reference Materials (SRMs) for uranium in water. Both the Environmental Protection Agency (EPA) and the Department of Energy (DOE) Environmental Measurements Laboratory (EML) circulate uranium-in-water quality assurance intercomparison samples. Our results for these are consistently within ±1 standard deviation of the certified mean concentration, which ranges from 5 - 2000 ng/mL. Over a period of 5 y the determination of uranium in these reference materials had a mean recovery of 100% ± 6% on 340 measurements. Results on EPA Performance Evaluation samples are shown in the following table.

EPA Uranium in Water		
Date	EM-9 (pCi/L)	EPA (pCi/L)
September 1983	27.7 ± 1.4	26 ± 6
November 1983	18.2 ± 1.1	17 ± 4
February 1984	13.4 ± 1.2	15 ± 6
August 1984	23.6 ± 0.6	20 ± 6
September 1984	29.2 ± 1.0	31 ± 6
February 1985	11.9 ± 0.8	12 ± 6
August 1985	3.7 ± 0.5	4 ± 6
February 1986	9.1 ± 1.1	9 ± 6
August 1986	4.1 ± 0.6	4 ± 6
February 1987	8.2 ± 1.0	8 ± 6
August 1987	12.7 ± 0.7	13 ± 6
February 1988	3.3 ± 0.5	3 ± 6
August 1988	5.6 ± 0.4	6 ± 6

4. Interferences

4.1. Very high concentrations of fissionable Pu will create positive interference, but this has never been observed in routine water samples.

4.2. High concentrations of Th relative to U can create positive interferences since thorium fission is induced by fast neutrons. The degree of flux thermalization is very important in minimizing this source of interference. Thorium/uranium ratios of 100:1 are needed before the impact can be observed in our DNA system. Since thorium is much less soluble in water than uranium, this is an unlikely interference.

4.3. Departure of the U isotopic ratio from that assumed can create either positive or negative interferences. Uranium-238 fissions by fast neutron capture while ^{233}U fissions by thermal neutron capture, which has a different yield of delayed-neutron-emitting products. Some assumptions concerning the isotopic abundance in the samples must be made in order to calculate total uranium concentration. Uranium-235 may be reported directly with no such assumptions required.

4.4. Very large concentrations of high-cross-section isotopes with short-lived activation products can also interfere with uranium determination. High levels of Al, Na, or Cl produce intense gamma-ray fluxes in the detectors that can eventually overwhelm the neutron peak by gamma-pulse pile-up. The problem cannot be corrected for, but the spectrum can be monitored for its occurrence and data thus affected can be rejected. Samples can be diluted to eliminate this interference, but with corresponding loss of sensitivity.

5. Collection and Storage of Samples

5.1. Filter samples and acidify to 2% HNO_3 immediately after collection to preclude loss of U to container walls. If samples are collected directly in 25-mL irradiation rabbits, acidification is unnecessary. Avoid using HCl because Cl contributes to pulse pile-up.

5.2. Store samples in containers that avoid contamination of the water samples after collection.

6. Apparatus

6.1. Irradiation rabbits: 25-mL, screw-cap, polyethylene, scintillation vials, Packard.

6.2. Nuclear reactor: equipped with a "liquid" delayed neutron facility. The characteristics of the Los Alamos facility are described in detail in Source Material 12.5.

6.3. Standard water filtering apparatus for supporting 0.45-micron filters.

6.4. Hot plate.

6.5. Flasks: 100-mL, glass, volumetric, new.

6.6. Beakers: 50-mL, Pyrex, new.

6.7. Pipettes with disposable tips: 50- and 100-μL, 1- and 5-mL.

6.8. Heat-sealable pouches: Kaypak/Scotchpak.

6.9. Baking dishes: 9- by 14- by 2-in., Pyrex, lined with Teflon adhesive material.

7. Reagents

7.1. Nitric acid (concentrated, highest purity available).

7.2. Distilled water (highest purity available).

8. Calibration and Standards

8.1. Calibrate the DNA facility by concurrent analysis of known quantities of uranium added to distilled water.

8.2. Standard preparation.

8.2.1. NIST Uranium Isotopic Standards U-0002 thru U-970 and NBS SRM 950b (Uranium Oxide, U_3O_8) are used exclusively for the preparation of standard solutions.

8.2.2. Dissolve 117-mg portions of U_3O_8 of the various isotopic compositions in 10 mL of concentrated HNO_3 in 50-mL beakers on a hot plate. Dilute to 100 mL in volumetric flasks with high-purity distilled water. Stock solutions are now 1,000 ppm total uranium. Discard beakers in radioactive waste to avoid any possibility of isotopic cross-contamination.

8.2.3. Prepare additional dilutions of the concentrated stock just before actual water standard preparation.

8.2.3.1. Dilute 50 μL of concentrated stock to 100 mL with distilled water. Place into irradiation rabbits immediately. These standards are 500 μg/L (ppb).

8.2.3.2. Dilute 100 μL of concentrated stock to 100 mL with distilled water. This solution is 1,000 μg/L (ppb). Make two further dilutions of this dilute stock as described below.

8.2.3.3. Dilute 1 mL of dilute stock from Step 8.2.3.2 to 100 mL with distilled water. Immediately place into irradiation rabbits. These standards are 10 μg/L (ppb).

8.2.3.4. Dilute 10 mL of dilute stock from Step 8.2.3.2 to 100 mL with distilled water. Immediately place into irradiation rabbits. These standards are 100 μg/L (ppb).

9. Procedure

9.1. Sample preparation for the wet procedure.

9.1.1. Fill 25-mL irradiation rabbits with samples and screw the lids on tight.

9.1.2. Advantages of wet procedure.

9.1.2.1. Ease of sample preparation.

9.1.2.2. Minimization of sample contamination during handling.

9.1.3. Disadvantages of wet procedure.

9.1.3.1. Constantly leaking samples that often cause serious negative errors in the uranium concentration of samples.

9.1.3.2. The leaking samples cause a contaminated "liquid" system which must be cleaned after every sample run during which a leak occurs. This results in significant system down time and slow sample turnaround.

9.2. Sample preparation for the dry (evaporative) procedure.

9.2.1. Fill 25-mL irradiation rabbits with the samples and record the net wet weight of the samples in the notebook.

9.2.2. Transfer the 25-mL samples into Kaypak/Scotchpak heat-sealable pouches and place them in a 9- by 14- by 2-in. Pyrex baking dish for evaporation. Mark the pouches with the sample number.

9.2.3. Turn on the hot plate to approximately 60°C, and let the samples evaporate for 1-2 d or until dry.

9.2.4. Once all the liquid has evaporated, fold the pouches to a form that will fit into the irradiation rabbits (rolled usually works best) and secure the lid back on the vial.

9.2.5 The advantage of this preparation method is that it eliminates the problems enumerated under wet preparation. Disadvantages are that this method requires more analyst time and increases the risk of sample contamination during the evaporation.

9.3. Quality contol sample preparation.

9.3.1. The EPA Uranium-in-Water Performance Evaluation samples received 3-4 times per year are used to provide batch-to-batch quality assurance. Diltue the entire EPA stock received to 4 L using the EPA instructions. Immediately place all of this solution into 25-mL irradiation rabbits and store until needed.

9.3.2. Quality control samples should equal approximately 10% of the total samples analyzed.

9.4. Blank preparation.

9.4.1. Fill at least five 25-mL irradiation rabbits with uranium-free distilled water and screw lids on tight.

9.5. Sample submission and irradiation.

9.5.1. Stagger the blanks, QCs, and standards evenly throughout the sample set.

9.5.2. Transport the sample set to the Omega West Reactor (TA-2) and submit them directly to the DNA facility operator in Group INC-5. List any special instructions, program code, number of samples, etc. Samples will be individually weighed by INC-5 before irradiation, so volumetric manipulations of samples are not required. The 25-mL rabbits are sufficiently similar in weight that individual pretaring is not necessary for water samples.

9.5.3. Sample irradiation and counting are conducted by INC-5 in the "liquid" DNA facility as described in more detail in Source Material 12.5. All data reduction is done on-line by INC-5's PDP 11/60. Data are mailed to us.

9.5.4. Return the samples to our laboratory after they have been allowed to decay for two weeks. Discard the blanks in radioactive waste. Save the samples until the customer has accepted the data.

9.5.5. Standards and quality control samples may be reused. A two-week decay period is recommended to minimize personnel radiation exposure, but there is no nuclear chemical barrier to immediate reuse if necessary.

10. Operation of Equipment

10.1. Equipment operation is the responsibility of INC-5.

11. Calculations

11.1. The general form of the data received from INC-5 is shown below. If the actual weight of water in the sample is used, the final result is in μg/L (ppb). The result provided by INC-5 must be recalculated due to highly variable system blanks and the absence of either daily standardization or quality control. Accurate daily determination of the system blank is required because this becomes an especially important source of error as the detection limit is approached. Most natural water samples have uranium concentrations near the system detection limit.

OUTPUT FROM INC-5

Sample	Weight	Peak	Valley	Flux	ppb
861069	25.0	947.	24.	5308	25.10
861070	24.8	1336.	29.	5415	35.87
861071	23.9	403.	120.	5408	9.69

11.2. The peak/valley ratio from the INC-5 data must be calculated for each sample. Ratios that fall below 5.0 indicate excessive gamma-pulse pile-up. Such samples will have to be either diluted and rerun or analyzed by another analytical technique. Data with ratios between 5.0 and 10.0 will have a cautionary note placed in the comment field of the database indicating that the results may be suspect. Data with ratios greater than 10.0 should be accurate.

11.3. Calculate the system calibration factor from the following equation:

$$K = \frac{A \times W \times F}{(P - B)} ,$$

where K = calibration factor (an average K will usually be calculated using multiple standards),
A = concentration of U standard (μg/L),
W = volume of standard (L),
F = reactor flux during irradiation of the standard,
P = gross counts in neutron peak of the standard, and
B = average gross counts in neutron peak of blanks.

11.4. Final U results are calculated by INC-5 using the following formula:

$$U = \frac{(P - B) \times K}{W \times F} ,$$

where U = concentration of uranium in the sample (μg/L),
P = gross counts in neutron peak of sample,
B = average gross counts in neutron peak of blanks,
W = sample volume (L),
F = reactor flux during irradiation of the sample, and
K = system calibration factor from Step 11.3.

11.5. Overall uncertainty is reported as the propagated sum of uncertainties from individual parts of the calculation process.

11.5.1. Calculate the counting uncertainty as follows:

$$D = \frac{\sqrt{P + B}}{P} ,$$

where D = counting uncertainty in total counts,
P = gross counts in the neutron peak of sample, and
B = average gross counts in the neutron peak of blanks.

11.5.2. Calculate the uncertainty in the calibration factor as follows:

E = standard deviation among all K factors for the same run,

where E = calibration uncertainty and
K = calibration factors from Step 11.3.

11.5.3. Calculate the uncertainty in sample volume as follows:

$$G = \frac{X}{W} ,$$

where G = uncertainty in sample volume,
X = minimum volume that the pipette can measure (mL), and
W = sample volume (mL).

11.5.4. Calculate the uncertainty in the reactor flux as follows:

$$H = \frac{\sqrt{F}}{F} ,$$

where H = uncertainty in reactor flux, and
F = reactor flux.

11.5.5. The final propagated uncertainty is calculated as follows:

$$V = U \times \sqrt{D^2 + E^2 + G^2 + H^2} ,$$

where V = overall uncertainty (μg/L),
U = result from Step 11.4 (μg/L),
D = counting uncertainty,
E = calibration factor uncertainty,
G = sample volume uncertainty, and
H = reactor flux uncertainty.

11.6. All sample calculations assume natural uranium isotopic abundance unless otherwise specified by the customer. In the latter case, the $^{235}U/^{238}U$ ratio must be determined by another analytical method and the data adjusted as follows:

$$T = \frac{I}{R} \times U ,$$

where T = adjusted total uranium concentration in the sample (μg/g),
I = $^{235}U/^{238}U$ ratio in natural materials (0.0072),
R = $^{235}U/^{238}U$ ratio measured in the sample, and
U = uranium concentration in the sample from Step 11.4 (μg/L).

12. Source Materials

12.1. S. Amiel, "Analytical Applications of Delayed Neutron Emission in Fissionable Elements," *Anal. Chem.* **34**, 1683-1692 (1962).

12.2. S. Amiel, J. Gilet, D. Heymann, "Uranium Content of Chondrites by Thermal Neutron Activation and Delayed Neutron Counting," *Geochim. Cosmochim. Acta* **31**, 1499-1503 (1967).

12.3. G. R. Keepin, T. F. Wimett, R. K. Zeigler, "Delayed Neutrons from Fissionable Isotopes of Uranium, Plutonium, and Thorium," *Phys. Rev.* **107**, 1044-1049 (1957).

12.4. S. J. Balestrini, J. P. Balagna, H. O. Menlove, "Two Specialized Delayed Neutron Detector Designs for Assays of Fissionable Elements in Water and Sediment Samples," *Nucl. Instru. Methods* **136**, 521-524 (1976).

12.5. E. S. Gladney, D. B. Curtis, D. R. Perrin, J. W. Owens, and W. E. Goode, "Nuclear Techniques for the Chemical Analysis of Environmental Materials," Los Alamos Scientific Laboratory report LA-8192-MS (1980).

12.6. M. A. Gautier, E. S. Gladney, and B. T. O'Malley, "Quality Assurance for Health and Environmental Chemistry: 1985," Los Alamos National Laboratory report LA-10813-MS (1986).

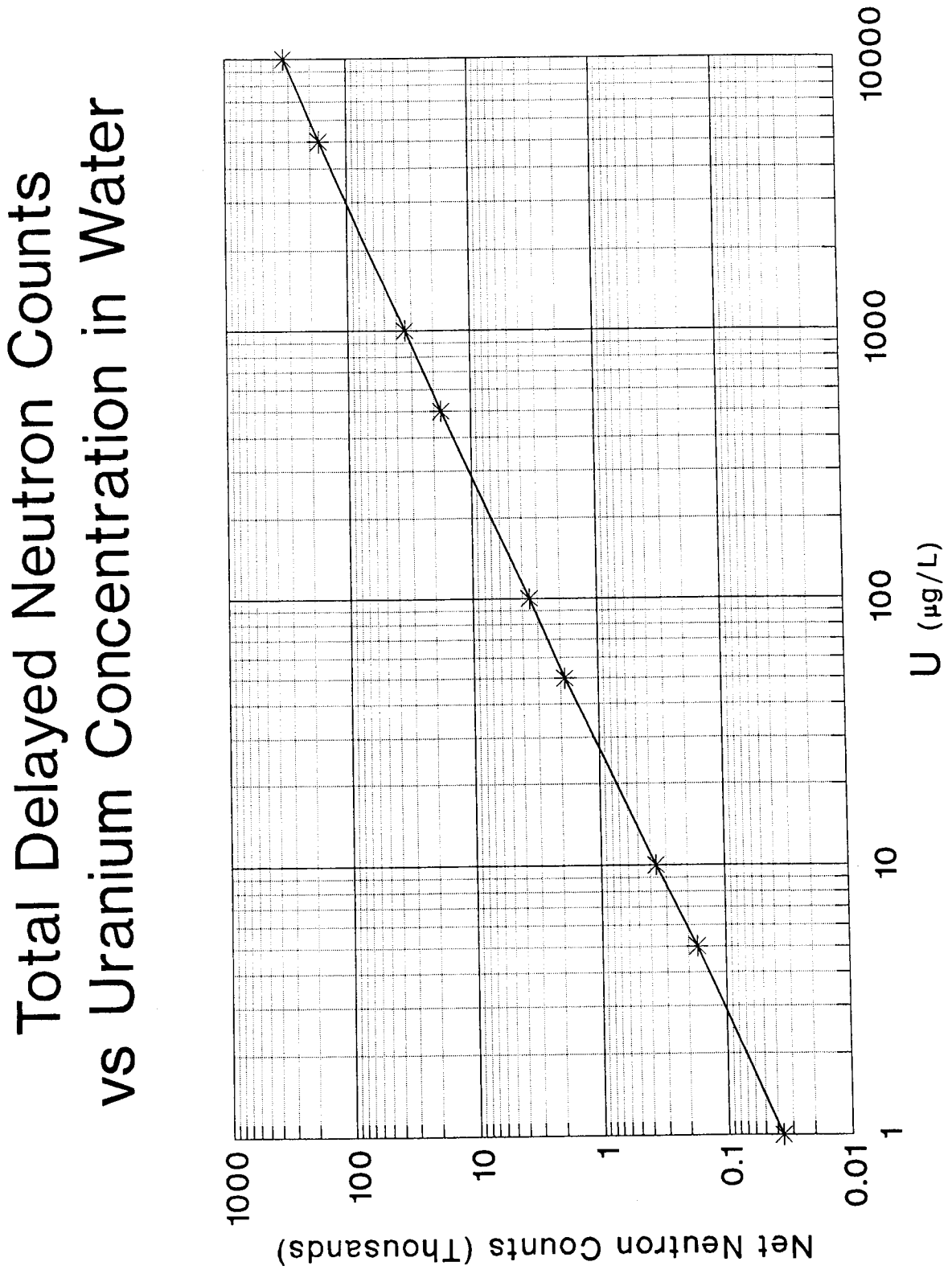

Fig. 1. Delayed neutron counts vs uranium concentration in water samples.

TOTAL URANIUM AND $^{235}U/^{238}U$ RATIO IN WATER — ICPMS

Analyte: Uranium	**Method No.:** ER290
Matrix: Natural and effluent waters	**Minimum Detectable Concentration:** 0.1 μg/L
Procedure: Inductively coupled plasma mass spectrometry (ICPMS)	**Accuracy and Precision:** 100% ± 5% at 10 μg/L
Effective Date: 10/01/86	**Authors:** Michael G. Bell Ernest S. Gladney

SAFETY NOTE: Before beginning this procedure, read all of the Material Safety Data Sheets for the chemicals listed in Sec. 7. Read Sec. 4.3 of the EM-9 Safety Manual for information on personal protective clothing and equipment.

1. Principle of Method

1.1. Aqueous samples of almost any type can be analyzed for uranium. Samples are aspirated into an inductively coupled argon plasma ionization source.

1.2. Ions from the plasma are drawn into a quadrupole mass spectrometer where they are filtered according to mass. The output of the quadrupole is detected by a continuous dynode electron multiplier operating in the ion counting mode. The output from the detector is amplified and stored on a conventional multichannel pulse-height analyzer.

1.3. The quadrupole mass filter may be scanned to examine the mass range of 208-241 amu to produce simultaneous results for uranium isotopes and internal standards.

1.4. Quantitative data on uranium concentrations and isotopic ratio are obtained by concurrent measurements of aqueous standards of known uranium content and isotopic ratio. A major advantage of this method is that no assumptions concerning the uranium isotopic ratio of the samples need to be made.

1.5. Simple chemical preconcentration is required for isotope ratio determination in samples that yield small ^{235}U peaks.

2. Sensitivity and Resolution

2.1. The sensitivity of this instrument is reported as (ion counts/s)/ppm of the mass of interest. This value varies daily, with typical results for masses above 80 amu of 0.5 - 1.0 million (counts/s)/ppm.

2.2. Sensitivity may sometimes be improved by changing any one or more of the following operating parameters: counting time, ion focusing lens potentials, nebulizer gas flow rate, sample flow rate, or the regularity and smoothness of the sampler and skimmer cone orifices.

2.3. The resolution of the inductively coupled plasma mass spectrometer (ICPMS) is based on the width of the peak at 5% of the peak height. A resolution of 1 amu between ^{207}Pb and ^{208}Pb at 5% of the peak height is usually obtained. Resolution may be increased when necessary, but with a corresponding loss in sensitivity.

2.4. The sensitivity of the isotope ratio measurement is determined by both abundance and statisitical considerations. Since many of the samples encountered originate from AEC/ERDA/DOE waste burial areas, altered isotopes are to be expected. Samples with ^{235}U enrichment high enough to require chemical preconcentration for observation of small ^{238}U mass peaks have not yet been encountered. Samples enriched in ^{238}U ("depleted uranium") are often observed, and preconcentration methods are directed towards this aspect of isotope ratio measurement.

3. Accuracy and Precision

3.1. Correct for instrumental drift by using ^{209}Bi or ^{232}Th as an internal standard. Spike concentrations of 100 μg/L are spiked into the samples before analysis.

3.2. The ICPMS is an ion counting system and is subject to normal "counting statistics" definitions of precision. Therefore, the square root of the number of counts is the minimum error. Account for other sources of uncertainty and mathematically propagate them to this minimum value.

3.3. There are no National Institute of Standards and Technology (NIST) Standard Reference Materials (SRMs) for urnanium in water. Both the Environmental Protection Agency (EPA) and the DOE Environmental Measurements Laboratory circulate uranium-in-water quality assurance samples. Our results for these are consistently within 1 standard deviation of the certified mean concentration. Results are shown below.

EPA Uranium in Water QA Materials (pCi/L)		
SAMPLE	EM-9 ICPMS (pCi/L)	EPA Value (pCi/L)
U in Water, Sept 1984	30.6 ± 2.1	31 ± 6
Alpha PE, April 1986	8.1 ± 0.2	5 ± 6
U in Water, August 1986	4.2 ± 0.4	4 ± 6
Alpha PE, October 1986	9.8 ± 0.4	10 ± 6
U in Water, February 1987	4.4 ± 0.1	8 ± 6
Alpha PE, April 1987	5.0 ± 0.1	5 ± 6
U in Water, August 1987	13 ± 2	13 ± 6
U in Water, February 1988	3.0 ± 0.1	3 ± 6
Alpha PE, April 1988	7.5 ± 0.2	6 ± 6
U in Water August 1988	6.4 ± 0.4	6 ± 6
Alpha PE, October 1988	9.6 ± 0.1	5 ± 6

3.4. ICPMS is not currently capable of delivering the isotope ratio precisions that can be routinely obtained by thermal ionization mass spectrometry (0.1% relative standard deviation or better). ICPMS vendors claim 0.5% relative standard deviation (RSD) capability, and we have observed 1.5% RSD for NIST U-500 in solution. A minimum of 500 counts of ^{235}U must be obtained in order to achieve 5% RSD for a $^{235}U/^{238}U$ ratio of 0.002 at an ion counting sensitivity of 500,000 (counts/s)/ppm. This equals 1 μg/L of ^{235}U or 500 μg/L total uranium with a $^{235}U/^{238}U$ ratio of 0.002.

3.5. There is a mass discrimination effect in ICPMS. Run uranium solutions of known isotopic ratio to evaluate the size of this effect and to develop a correction factor that must then be applied to all data. The correction factor on our current instrument is approximately 6% (multiply the measured $^{235}U/^{238}U$ ratio by 1.06 to correct for this mass discrimination effect).

3.6. There are no NIST SRMs for isotopic uranium in water. ICPMS performance has been evaluated by dissolving National Bureau of Standards (NBS) SRM 950b (Uranium Oxide, U_3O_8) and NBS SRM 960 (Uranium Metal), which are certified for their U^{235}/U^{238} ratio, and diluting with distilled water. Results are tabulated below.

U^{235}/U^{238} in Water			
Sample	Date	EM-9 ICPMS	NBS Value
NBS 950b	1988	0.0069 ± 0.0001	0.0073 ± 0.0001
NBS 960	1986	0.0072 ± 0.0004	0.0073 ± 0.0001
	1987	0.0070 ± 0.0003	0.0073 ± 0.0001
	1988	0.0071 ± 0.0002	0.0073 ± 0.0001

4. Interferences

4.1. High concentrations of dissolved solids can cause build-up and clogging of the nebulizer and torch. Dissolved solids also increase the probability of the combination of two ions to form molecular ion interferences. Include standard additions for unknown matricies to demonstrate the lack of interferences. Recoveries should be between 90% and 110%. Chemical separations may ultimately be required to remove matrix effects or increase sensitivity, especially for isotopic determination.

4.2. There are no solvent, oxide, or doubly charged peaks that interfere with this mass region.

4.3. There are no direct mass overlap interferences from ^{209}Bi, ^{232}Th, ^{235}U, or ^{238}U.

4.4. Direct observation of the $^{235}U/^{238}U$ ratio is required to establish whether calculation of uranium based on the ^{238}U peak alone is appropriate. Calibration standards must be of known uranium isotopics.

5. Collection and Storage of Samples

5.1. Filter and acidify samples with 3% HNO_3 immediately after collection to preclude loss of uranium to container walls.

5.2. Store samples in polyethylene containers.

6. Apparatus

6.1. Inductively coupled plasma mass spectrometer: VG Plasmaquad, equipped with a Gilson Model 221 Autosampler.

6.2. Bottles: 125-mL, polyethylene.

6.3. Pipettes: 100-, 500-, and 1000-μL Eppendorf with disposable tips.

6.4. Flasks: 100- and 1000-mL, volumetric.

6.5. Standard water filtering apparatus to support 0.45-micron filters.

6.6. Beakers: 50-mL, glass, new.

6.7. Hot plate.

6.8. Ion exchange columns: glass, typically around 197 mm long by 7 mm i.d. with a 100-mL top reservoir and a tip tapered to 2 mm i.d. (see Fig. 1).

6.9. Resin: Chelex-100.

6.10. pH paper: for 4 - 5 pH range.

7. Reagents

7.1. NIST SRM U_3O_8. Isotopically certified SRMs 950b, U-0002 thru U-970.

7.2. Thorium solution (100 mg/L). Spex Industries, Inc., Edison, New Jersey.

7.3. Bismuth solution (100 mg/L). Spex Industries, Inc., Edison, New Jersey.

7.4. Magnesuim solution (1000 mg/L). Spex Industries, Inc., Edison, New Jersey.

7.5. Indium solution (1000 mg/L). Spex Industries, Inc., Edison, New Jersey.

7.6. Lead solution (1000 mg/L). Spex Industries, Inc., Edison, New Jersey.

7.7. Nitric acid (concentrated, sub-boiling redistilled).

7.8. Distilled water (highest purity available).

7.9. Ammonium acetate (uranium-free).

7.10. Acetic acid (concentrated, uranium-free).

7.11. Hydrochloric acid (concentrated, uranium-free).

8. Calibration and Standards

8.1. Prepare a multielement instrument optimization solution. Combine 100 μL each of the 1000-mg/L Mg, In, and Pb Spex solutions in a 1000-mL volumetric flask and dilute to volume with 3% (vol/vol) redistilled HNO_3. The resulting optimization solution is 100 μg/L for each of the three metals.

8.2. Standard preparation.

8.2.1. NIST Uranium Isotopic Standards U-0002 through U-970 and NBS SRM 950b (Uranium Oxide, U_3O_8) are used exclusively for the preparation of standard solutions.

8.2.2. Dissolve 117-mg portions of U_3O_8 of the various isotopic compositions in 10 mL of concentrated HNO_3 in a 50-mL beaker on a hot plate. Dilute to 1000 mL in volumetric flasks with high-purity distilled water. Stock solutions are now 100 mg/L total uranium. Discard beakers in radioactive waste to avoid any possibility of isotopic cross-contamination.

8.2.3. Prepare additional dilutions of the concentrated stock just before actual water standard preparation.

8.2.3.1. Dilute 500 μL of concentrated stock to 100 mL with 3% HNO_3. This solution is 500 μg/L.

8.2.3.2. Dilute 100 μL of concentrated stock to 100 mL with 3% HNO_3. This solution is 100 μg/L.

8.2.3.3. Dilute 10 mL of the 500-μg/L uranium solution to 100 mL with 3% HNO_3. This solution is 50 μg/L.

8.2.3.4. Dilute 10 mL of the 100-μg/L uranium solution to 100 mL with 3% HNO_3. This solution is 10 μg/L.

8.2.3.5. Dilute 1.0 mL of the 100-μg/L uranium solution to 100 mL with 3% HNO_3. This solution is 1.0 μg/L.

8.2.3.6. Dilute 1.0 mL of the 100-μg/L uranium solution to 1000 mL with 3% HNO_3. This solution is 0.1 μg/L.

8.3. Internal standard.

8.3.1. Prepare a 0.1-mg/L Bi or Th solution by diluting 1.0 mL of the 100-mg/L Bi or Th Spex solution to volume in a 1000-mL volumetric flask with 3% (vol/vol) HNO_3.

9. Procedure

9.1. Preparation of samples and standards for total uranium determination.

9.1.1. Label and fill each sample tube for the autosampler with the sample or standard solutions spiked with the internal standard.

9.1.2. Place the sample tubes in the autosampler rack in the following order:

Sequence	I.D.
1	Blank
1	Blank
2	0.1-μg/L multielement standard
2	1.0-μg/L multielement standard
4	10.0-μg/L multielement standard
7	500-μg/L multielement standard

Sequence	I.D.
1	Blank
5	50.0-μg/L multielement standard
6	100-μg/L multielement standard
8	QA sample (A)
9	15 samples
23	QA sample (B)
14	Blank
15	1.0-μg/L multielement standard
17	10.0-μg/L multielement standard
16	50.0-μg/L multielement standard

9.2. Refer to the VG Plasmaquad operation manual (Source Material 12.1) for details of the start up procedure.

9.3. Check the instrument performance using the 100-μg/L multielement optimization solution of Mg, In, and Pb.

9.4. Set the ICPMS parameters as follows:

- Number sweeps 240.
- Dwell time 250 μs.
- Mass range 208 - 241.
- Number of channels 1024.

9.5. Select the following isotopes: ^{235}U, ^{238}U, and either ^{209}Bi or ^{232}Th, depending upon which was selected for spiking as the internal standard.

9.6. A rinse time of 60 s with 3% HNO_3 between samples is suitable for routine use.

9.7. Sample preconcentration for uranium isotope determination.

9.7.1. At least a 500-mL sample is required for natural waters with typical uranium concentrations of 1 μg/L .

9.7.2. Add 2 g of ammonium acetate and 5 mL of concentrated acetic acid to the 500-mL sample. Check pH with appropriate range pH paper to establish that the sample is in the range of 4.0 - 4.5. Add additional ammonium acetate and acetic acid (in same ratio as above) until this pH range is achieved. Chelex-100 has a high distribution coefficient for uranium at this pH.

9.7.3. Prepare a short ion exchange resin bed (4-cm by 1-cm) of Chelex-100 packed under water in the ion exchange columns described in Step 6.8.

9.7.4. Pour the sample through the column at flow rates of up to 15 mL/min (5 drops/s).

9.7.5. Elute the uranium with 10 mL of 1 M HCl.

9.8. Uranium isotopic analysis on ICPMS.

9.8.1. Set the ICPMS parameters as follows:

- Select isotopes 235 and 238.
- Mass range 230 - 240.
- Dead time 180 ns.
- Sweeps 500.
- Dwell time 200 ms.
- MCA 1024 channels.

10. Operation of Instrument

10.1. Details for operation of the VG Plasmaquad are documented in the instrument operting manual (Source Material 12.1).

10.2. Check the Ar gas gauge pressures for the ICPMS. The desired pressures are shown below.

Gas	Tank	Plasma	Aux	Nebulizer
Argon	>80psi	15 L/min	L/min	0.70 L/min

11. Calculations

11.1. Manual data reduction.

11.1.1. Calculate the percent change in the internal standard mass area for each sample and standard, and correct each mass area response by its corresponding change in internal standard mass area.

11.1.2. Construct calibration curves from counts/s versus concentration graphs from the standards.

11.1.3. The total uranium concentration in a sample is determined from those calibration curves by reading the concentration of the sample directly from the appropriate curve using the counts/s response of the sample.

11.1.4. The $^{235}U/^{238}U$ ratio is calculated using the following formula:

$$^{235}U/^{238}U = \frac{(A - B) \times F}{(C - D)} ,$$

where A = gross peak area for ^{235}U in sample,
B = gross peak area for ^{235}U in blank,
C = gross peak area for ^{238}U in sample,
D = gross peak area for ^{238}U in blank, and
F = mass discrimination correction (1.06).

11.2. Computer data reduction.

11.2.1. Enter data into a spreadsheet using LOTUS 1-2-3 for the calculations.

11.2.2. Construct a least squares linear calibration curve using the Lotus 1-2-3 spreadsheet linear least squares program (Data Regression Option).

11.2.3. Correct samples and standard counts for instrument drift using Bi (soil extracts) or Th (water) internal standard peak areas and then correct for blank contribution.

11.2.4. Calculate the isotopic ratio using corrected peak areas for ^{235}U and ^{238}U. The desired precision determines the minimum peak areas that are acceptable. One thousand counts in the smaller peak achieve ±3% RSD (equivalent to 500 ppb total uranium at natural isotopic abundance). Multiply these results by the mass discrimination factor (currently 1.06).

12. Source Materials

12.1. VG Isotopes Plasmaquad Operation Manual.

12.2. National Institute of Standards and Technology Certificates of Analysis, Standard Reference Materials U-0002 to U-970.

12.3. E. S. Gladney, R. J. Peters, and D. R. Perrin, "Determination of Uranium-235/Uranium-238 Ratio in Natural Waters by Chelex 100 Ion Exchange and Neutron Activation Analysis," *Analytical Chemistry* **55**, 976-977 (1983).

12.4. M. A. Gautier, E. S. Gladney, and D. R. Perrin, "Quality Assurance for Health and Environmental Chemistry: 1984," Los Alamos National Laboratory report LA-10508-MS (1985).

12.5. M. A. Gautier, E. S. Gladney, W. D. Moss, M. Phillips, and B. T. O'Malley, "Quality Assurance for Health and Environmental Chemistry: 1986," Los Alamos National Laboratory report LA-11114-MS (1987).

12.6. M. A. Gautier, E. S. Gladney, M. Phillips, and B. T. O'Malley, "Quality Assurance for Health and Environmental Chemistry: 1987," Los Alamos National Laboratory report LA-11454-MS (1988).

12.7. M. A. Gautier, E. S. Gladney, M. Phillips, and B. T. O'Malley, "Quality Assurance for Health and Environmental Chemistry: 1988," Los Alamos National Laboratory report, LA-11637-MS (1989).

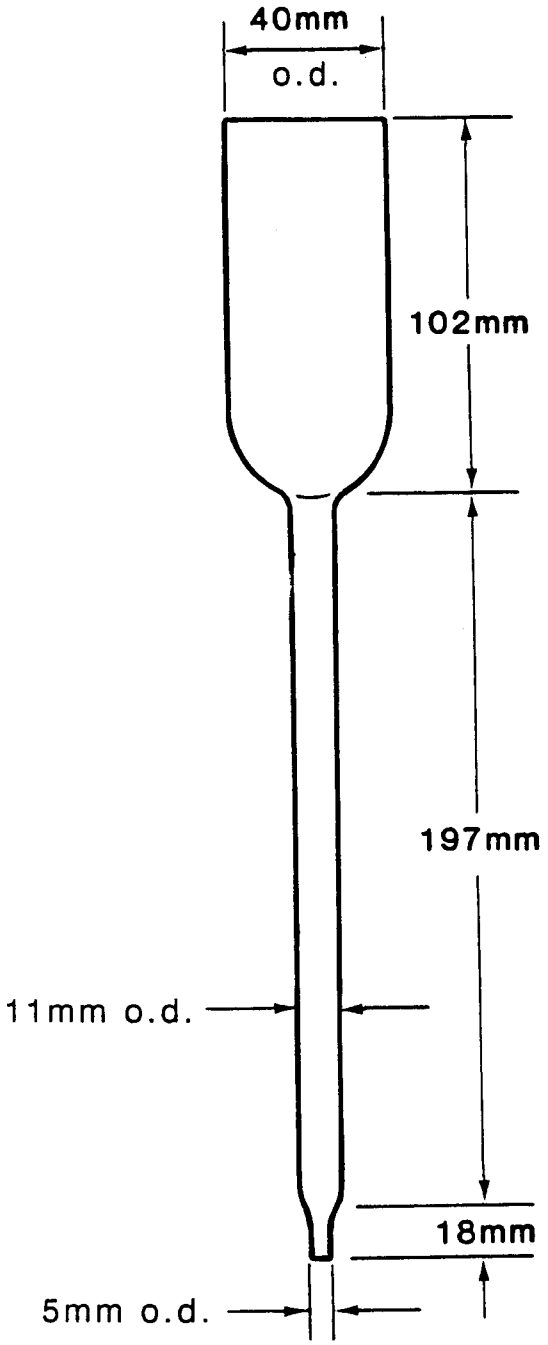

Fig. 1. Ion exchange column.

DEPLETED URANIUM IN SOILS — IENA

Analyte: Uranium	**Method No.:** ER300
Matrices: Soils	**Minimum Detectable Concentration:** 1.0 μg/g
Procedure: Instrumental epithermal neutron activation (IENA) analysis	**Accuracy and Precision:** 100% ± 5% at 50 μg/g total uranium
Effective Date: 01/01/77 to 08/01/92	**Author:** Ernest S. Gladney

SAFETY NOTE: Before beginning this procedure, read all of the Material Safety Data Sheets for the chemicals listed in Sec. 7. Read Sec. 4.3 of the EM-9 Safety Manual for information on personal protective clothing and equipment.

1. Principle of Method

1.1. Silicate materials (primarily soils) that may have been contaminated by uranium of altered isotopic abundance cannot be accurately analyzed by methods that focus on ^{235}U. If the potential contaminant is depleted uranium (lower ^{235}U content than natural abundance), the samples can readily be analyzed by nuclear methods that focus on ^{238}U because it constitutes at least 99.4% of the total uranium.

1.2. Epithermal neutron activation uses the $^{238}U(n,\gamma)^{239}U$ reaction, detecting the gamma ray emitted by either the 23.5-min ^{239}U or its 2.35-d ^{239}Np decay product. Samples are irradiated in the epithermal neutron flux of the Omega West Reactor to activate uranium. Induced radioactivity is observed on either low-energy photon detectors or on large Ge(Li) detectors multiplexed to 4096-channel, pulse-height analyzers. All determinations are performed instrumentally without the use of chemical separation. Quantitative data on uranium concentrations are obtained by concurrent measurement of rocks or ores of known uranium content and isotopic ratio. Either the 74.7-keV transition from the 23.5-min ^{239}U or the 278-keV gamma ray from the 2.35-d ^{239}Np may be used to produce quantitative results. The short-lived isotope allows rapid screening of larger numbers of samples, while the longer-lived isotope provides somewhat lower detection limits.

1.3. Epithermal neutron activation reduces the intense levels of activity observed in thermal neutron activation from a number of common major elements in rocks (Al, Mn, Na). This property provides an important advantage for the determination of certain elements that are preferentially activated by epithermal neutrons, those that possess significant neutron capture cross-sectional

resonances in the epithermal region. Uranium falls into this category. Interference from uranium fission product nuclides is also suppressed, since the uranium fission cross section is smaller for epithermal than for thermal neutrons.

2. Sensitivity

2.1. Normally 0.25 μg of uranium can be detected in a 250-mg sample (3σ above background).

3. Accuracy and Precision

3.1. The accuracy of the method is independent of the exact uranium isotope ratio, as long as ^{238}U is at least 99% abundant.

3.2. There are numerous National Institute of Standards and Technology (NIST), United States Geological Survey (USGS), Canadian Certified Reference Materials Project (CCRMP), and International Atomic Energy Agency (IAEA) rock and ore reference materials with certified or well-established consensus values for uranium.

Agency	No.	Certified Value (μg/g)	EM-9 Values ^{239}Np (μg/g)	EM-9 Values ^{239}U (μg/g)
CCRMP	SY-2	284	254 ± 10	291 ± 30
	SY-3	650	647 ± 10	617 ± 30
	MRG-1	0.24	<1	<1
	BL-1	220	213 ± 12	226 ± 7
	BL-2	4530	4200 ± 280	4510 ± 200
	BL-3	10200	9600 ± 220	10200 ± 100
	BL-4	1730	1700 ± 15	1730 ± 40
	DH-1	1770	1650 ± 50	1800 ± 140
	DL-1	41	43 ± 4	41 ± 2
IAEA	S-2	2660	2920 ± 150	2650 ± 20
	S-3	3540	3700 ± 160	3440 ± 170
	S-4	3180	3300 ± 30	3230 ± 60
Junta de Energia Nuclear, Madrid, Spain				
	25	1200	1230 ± 100	1150 ± 80
	33	4470	4440 ± 200	4190 ± 200
	463	339	330 ± 12	302 ± 8
	467	119	137 ± 20	129 ± 11

4. Interferences

4.1. Isotopes emitting X-rays in the 75-keV region will create positive interference, but this has not been observed in routine samples.

4.2. Uranium fission products interfere with many of the gamma rays from ^{239}Np. The 278-keV peak appears to be interference free.

5. Collection and Storage of Samples

5.1. There are no special collection and storage requirements.

6. Apparatus

6.1. Pipettes with disposable tips: 50-μL, Eppendorf.

6.2. Vials: polyethylene, snap-cap, Beem Size No. 3 (small), Ladd Research, Burlington, Vermont.

6.3. Vials: polyethylene, 4-mL, Omega West Reactor irradiation "rabbits."

6.4. Filter paper: 4.25-cm-diam, Whatman.

6.5. Filter supports: polyethylene caps from 250-mL Nalgene bottles.

6.6. Tweezers: stainless steel.

6.7. Polyethylene film: 1-mil-thick by 1.5-in.-wide flat tubing.

6.8. Nuclear reactor: Los Alamos Omega West Reactor, with boron-filtered epithermal irradiation facility.

6.9. Analytical balance: top loading with 1-mg sensitivity.

6.10. Gamma-ray spectrometry system.

7. Reagents

7.1. Nitric acid (concentrated, reagent-grade).

7.2. Uranium standard solution (1000 μg/g): Spex Industries, Inc., Metuchen, New Jersey.

7.3. Gold standard solution (1000 μg/g): Spex Industries, Inc., Metuchen, New Jersey.

7.4. Distilled water (highest purity available).

8. Calibration and Standards

8.1. Any silicate material with certified uranium concentration may be used, so long as the $^{235}U/^{238}U$ ratio is less than 0.01. Treat these materials in the same manner as the samples beginning with Step 9.2.1.

8.2. Preparation of filter standards.

8.2.1. Prepare at least three filter standards. Place 250-mL polyethylene bottle caps upside down and insert a new 4.25-cm Whatman filter into each cap. Carefully pipette 50 μL of the 1000 μg/g uranium standard solution onto separate filters, spotting the drops uniformly about the face of the filter. Be sure that no liquid touches the edge or the filter holders. Discard any filters where liquid touches the holder and wash the holder in 7 N nitric acid. Prepare several filter blanks to check for uranium background in the standards.

8.2.2. Air dry the standard filters, roll to fit the Beem vials, insert individually, and close the snap-cap lids.

8.3. Preparation of flux monitors.

8.3.1. Place 250-mL polyethylene bottle caps upside down and insert a new 4.25-cm Whatman filter into each cap. Carefully pipette 50 μL of concentrated gold stock solution onto separate filters, spotting the drops uniformly about the face of the filter. Be sure that no liquid touches the edge or the filter holders. Discard any filters where liquid touches the holder and wash the holder in 7 N nitric acid.

8.3.2. Air dry the flux monitor filters, roll to fit the Beem vials, insert individually, and close the snap-cap lids.

9. Procedure

9.1. Sample preparation is ordinarily done by the customer and usually consists of drying and grinding the silicate material.

9.2. Sample packaging.

9.2.1. Weigh samples individually into Beem vials. Be sure to tare each vial before filling. Number the outside of the Beem vials with a black "Sharpie" marker. This marker has a very low trace element background.

9.2.2. If the short-lived ^{239}U activity is to be used, insert only one sample into each irradiation rabbit, fill the remaining space with polyethylene film

or empty Beem vials, and screw on one gold flux monitor cap. If the longer-lived ^{239}Np activity is to be used, insert two samples into an irradiation rabbit, fill the remaining space with polyethylene film or empty Beem vials, and screw on one gold flux monitor cap. Since flux gradients in the epithermal irradiation facility can be severe (up to 10% over the length of the first rabbit alone), each irradiation position within the rabbit must be calibrated separately.

9.2.3. Package standards in the same manner as samples. Place a flux monitor in the same position in each rabbit.

9.3. Irradiate the rabbits one at a time in the epithermal facility of the Los Alamos Omega West Reactor for 15 min. Be sure to record the time at the end of irradiation. For best results, request that the operators push the samples completely into the irradiation facility with a plastic rod rather than use pneumatic insertion. This gives a much more reproducible positioning within the boron shield.

9.4. If the ^{239}U isotope is used, count all samples at the face of a low-energy photon Ge(Li) or Si(Li) detector after a 15-min decay period. If the ^{239}Np activity is used, count all samples the next day at the face of high-resolution Ge(Li) or intrinsic Ge gamma-ray detectors, multiplexed to 4096-channel, pulse-height analyzers. In either case, store the gamma-ray spectra on disc for off-line data reduction. Note the beginning-of-count time, detector, counting geometry, and computer file number in a Laboratory notebook.

NOTE: Data reduction is simplified if all samples from the first irradiation position are counted in the same geometry on the same detector and the samples from the second irradiation position are counted in the same geometry on the same detector.

9.5. Count all standards from the first irradiation position in the same geometry and detector as samples from the first position. Treat the standards from the second irradiation position in the same manner as the samples from the second irradiation position.

9.6. Flux monitors may be counted on any detector but they must ALL be counted in the SAME geometry on the SAME detector.

9.7. Counting times may vary with the activities of the samples. For the ^{239}U, 1000-s count times are used. For ^{239}Np, count until 10,000 counts are observed in the gamma-ray lines of interest, or for 1000 s, whichever is shorter. Flux monitors normally require only 5-min counts.

10. Operation of Equipment

10.1. See the gamma-ray spectrometry instrument procedure (Method No. CR400).

11. Calculations

11.1. Either the 74.7-keV gamma ray from ^{239}U or the 278-keV gamma ray from ^{239}Np (daughter of the decay of ^{239}U) are numerically integrated in each spectrum, using the EM-9 GAMS computer program for digital integration of the gamma-ray spectra. Quantitation may be approached in two ways.

11.2. Multipoint calibration method.

11.2.1. Correct each gamma-ray peak for decay from beginning-of-count back to time-out-of-reactor and for variations in neutron flux using the following equation:

$$B = \frac{Ae^{\lambda(t1 - t2)}}{F} ,$$

where B = decay-corrected peak area,
A = integrated peak area,
λ = decay constant (0.693/half-life of isotope),
t1 = beginning-of-count time,
t2 = time-out-of-reactor time, and
F = decay-corrected peak area from gold flux monitor.

11.2.2. Plot the standard curves on 3-cycle log-log graph paper with the element concentration on the x-axis and the net peak area on the y-axis. Fit the curve to the data using least-squares or linear regression techniques (see Fig. 1).

11.2.3. Read the sample concentrations from the calibration curve using the decay- and flux-corrected net peak areas.

11.3. Since neutron activation is linear over 3 to 4 orders of magnitude of concentration, single-point calibration methods may be used if one is careful to determine the range of linearity through experience.

11.3.1. All calculations may be performed in a single equation using only one standard concentration:

$$Z = \frac{B_1 \times C \times F_2}{B_2 \times F_1 \times W} ,$$

where Z = final elemental concentration (μg/g),
B_1 = decay-corrected sample peak area,
B_2 = decay-corrected standard peak area,
C = standard concentration (μg),
F_1 = decay-corrected sample flux from gold flux monitor,
F_2 = decay-corrected standard flux from gold flux monitor, and
W = sample weight (g).

11.3.2. To obtain decay corrections for B_1 and B_2, use the equations from Step 11.2.1.

12. Source Materials

12.1. E. S. Gladney, W. K. Hensley, and M. M. Minor, "Comparison of Three Techniques for the Measurement of Depleted Uranium in Soils," *Anal. Chem.* **50**, 652-653 (1978).

12.2. E. S. Gladney, J. W. Owens, and J. W. Starner, "Simultaneous Determination of Uranium and Thorium in Ores by Instrumental Epithermal Neutron Activation Analysis," *Analytica Chimica Acta* **104**, 121-127 (1979).

12.3. E. S. Gladney, D. B. Curtis, D. R. Perrin, J. W. Owens, and W. E. Goode, "Nuclear Techniques for the Chemical Analysis of Environmental Materials," Los Alamos Scientific Laboratory report LA-8192-MS (1980).

12.4. M. A. Gautier, E. S. Gladney, and B. T. O'Malley, "Quality Assurance for Health and Environmental Chemistry: 1985," Los Alamos National Laboratory report LA-10813-MS (1986).

12.5. E. S. Gladney, D. R. Perrin, J. P. Balagna, and C. L. Warner, "Evaluation of a Boron-Filtered Epithermal Neutron Irradiation Facility," *Anal. Chem.* **52**, 2128-2132 (1980).

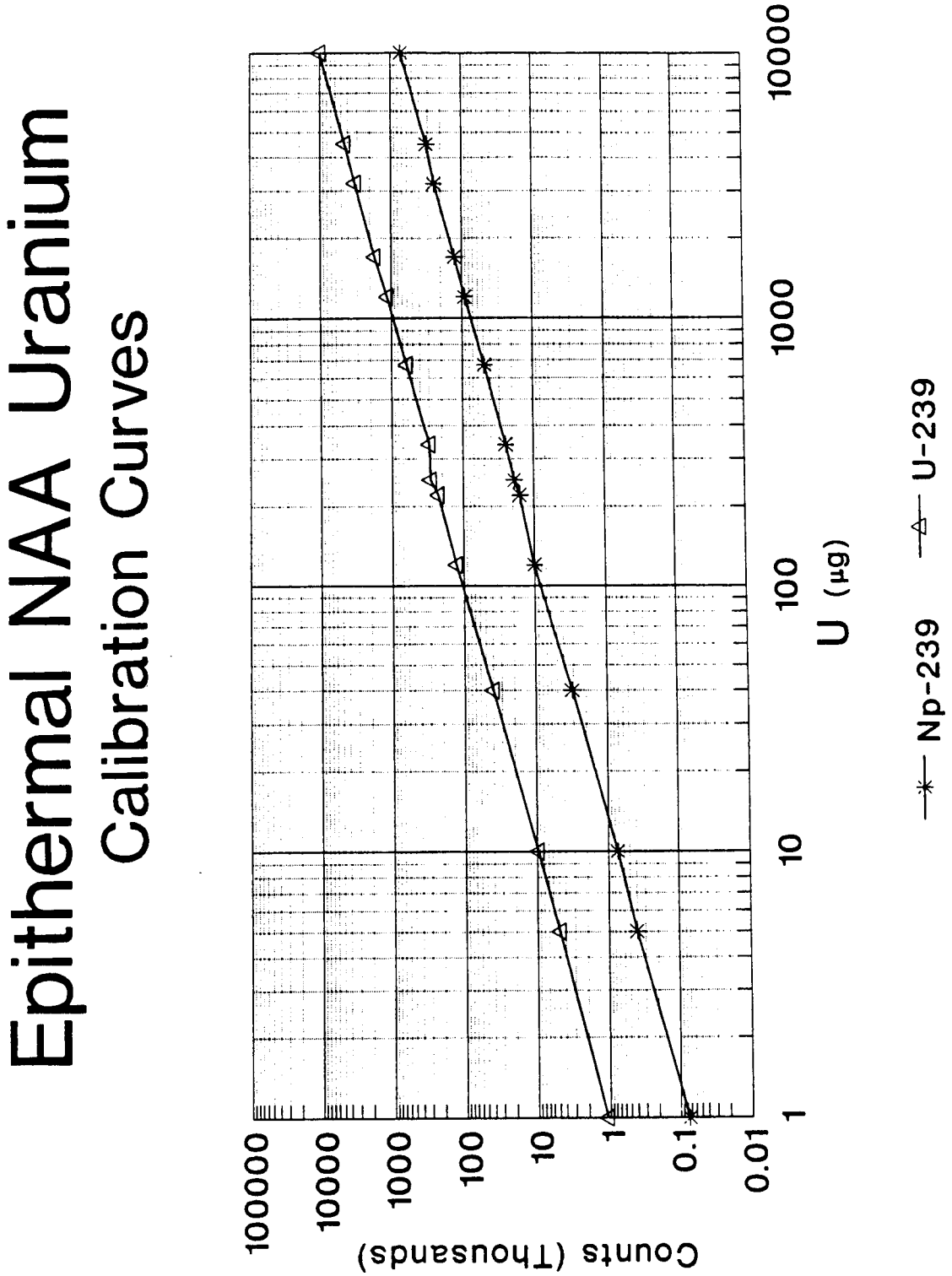

Fig. 1. Epithermal neutron activation analysis (NAA) uranium calibration curves.

PETROLEUM HYDROCARBONS, TOTAL RECOVERABLE IN SOIL
MOBILE LABORATORY METHOD

Analyte: Petroleum hydrocarbons	**Method No:** MLO274
Matrix: Soil	**Detection Limit:** 500 μg/kg
Procedure: Extraction with fluorocarbon-113 and infrared spectrophotometry	**Accuracy and Precision:** Unknown
Effective Date: 04/03/93	**Author:** Stuart D. Nielsen Matthew Monagle

SAFETY NOTE: Before beginning this procedure, read all of the Material Safety Data Sheets for the chemicals listed in Sec. 7. Read Sec. 4.3 of the EM-9 Safety Manual for information on personal protective clothing and equipment. Read Sec. 11 of this procedure and Source Material 12.2 for proper waste disposal practices.

1. Principle of Method

1.1. This method is a modification of EPA Method 418.1 (Storet No. 45501), which uses a water matrix instead of a soil matrix.

1.2. Hydrocarbons are extracted from a known weight of soil with fluorocarbon-113 (1,1,2-trichloro-1,2,2-trifluoroethane) or equivalent and the extract is analyzed by infrared spectrophotometry.

1.3. This method is applicable to the measurement of all types of aliphatic hydrocarbon mixtures, although significant amounts of the more volatile hydrocarbons may be lost during sample collection and manipulation.

2. Range and Detection Limit

2.1. With the sample diluted so that its absorbance is between 0.1 and 1.0 absorbance units, the method can detect from 0.6 μg of hydrocarbon in the sample to pure aliphatic hydrocarbon.

2.2. The lower limit of quantitation of this method was found to be 0.5 μg of hydrocarbon per milliliter of extract, which corresponds to 500 μg/kg of soil.

3. Accuracy and Precision

3.1. Accuracy and precision data are not currently available.

4. Interferences

4.1. Any compound that contains an aliphatic carbon-hydrogen bond interferes because the method measures the aliphatic carbon-hydrogen stretch band in the infrared spectrum of the analyte.

5. Advantages and Disadvantages

5.1. An advantage of the method is that it automatically measures the sum of all aliphatic hydrocarbons in the soil sample with one simple measurement.

5.2. A disadvantage of the method is that all compounds present containing aliphatic carbon-hydrogen bonds will be counted as aliphatic hydrocarbons.

6. Apparatus

6.1. Infrared spectrophotometer.

6.2. Analytical balance: capable of weighing to at least 100 g with an accuracy of at least four decimal places.

6.3. "VOA" vials: 45-mL, as received from the manufacturer (I-Chem or equivalent).

6.4. Glass pipettes.

6.5. Spectrometer cells: 1- or 5-cm-path-length, quartz.

7. Reagents

7.1. Fluorocarbon-113 (1,1,2-trichloro-1,2,2-trifluoroethane, reagent-grade) or equivalent.

7.2. Aliphatic hydrocarbon mixture to use as a standard. A light mineral oil is the preferred standard, although gasoline, kerosene, or diesel fuel can be used.

8. Calibration and Standards

8.1. Although the standard curve is theoretically linear from zero absorbance to infinite absorbance, precision and accuracy for any infrared determination are highest when the absorbance is between 0.1 and 1.0 absorbance units.

8.2. Calibration standards.

8.2.1. Stock standard. Weigh 2-5 mg of the standard hydrocarbon mixture into a tared VOA vial. Record the weight. Add 12.0 mL of fluorocarbon-113 to the vial.

8.2.2. Working standards. Dilute portions of the stock standard to give at least three standards with concentrations between 40 and 400 μg/mL. This should give a standard curve between approximately 0.1 and 0.9 absorbance units.

9. Procedure

9.1. Weigh 10-11 g of the soil sample into a tared VOA vial. Record the weight on the benchsheet.

9.2. Add 10 mL of fluorocarbon-113 to the vial. Cap the jar and shake vigorously. Shake the sample on a shaker table for 30 min to completely extract the hydrocarbons.

9.3. Allow the soil to settle. Fill a clean infrared cell with the supernatant liquid.

9.4. Determine the absorbance for each sample and standard over the range from 2700 cm^{-1} through 3100 cm^{-1} using pure fluorocarbon-113 as a reference.

9.5. If the absorbance exceeds 0.9, prepare an appropriate dilution and redetermine the absorbance.

10. Calculations

10.1. Measure the peak absorbance at approximately 2930 cm^{-1}. Measure background absorbances on both sides of the peak cluster at approximately 2800 cm^{-1} and 3010 cm^{-1}.

10.2. Calculate the background at 2930 cm^{-1} by interpolation between the absorbances measured on both sides.

10.3. Calculate the absorbance due to the sample by subtracting the calculated background at 2930 cm^{-1} from the peak absorbance.

10.4. Plot a standard curve from the data for the standards by plotting the absorbances vs. the concentrations in μg/mL.

10.5. Determine the concentration of petroleum hydrocarbons in the extract by comparing the absorbance against the standard curve.

10.6. Calculate the petroleum hydrocarbons in the sample using the following equation.

$$\mu g/g \text{ of soil} = \frac{(C \times V \times D)}{W} \quad ,$$

where C = concentration determined from standard curve,
V = volume of extractant solvent used,
D = extract dilution factor, if necessary, and
W = weight of soil used (g).

11. Proper Waste Disposal Practices

11.1. General waste management.

11.1.1. Each analyst within the section shall be given Waste Generator Training by EM-8 within 90 days of the date of hire.

11.1.2. Wherever possible, minimize the generation of waste through reduction, reuse, or recycling. Wherever possible, segregate containers to reflect the nature of the hazardous waste and the eventual waste disposal methods. For example, chlorinated solvent wastes should be segregated from flammable, nonchlorinated solvents and > 50-ppm contaminated waste should be segregated from <50-ppm PCB contaminated waste. This is especially important in analysis areas where the waste generated is considered to be mixed waste.

11.1.3. Categorize the waste using an EM-8 Waste Profile Form.

11.1.4. Upon completion of the Waste Profile Form, dispose of the waste by completing a Waste Disposal Request Form from EM-7. Approximately 30 days is required for the disposal of waste after the completion of the listed forms.

11.2. Solid waste.

11.2.1. Accumulate solid hazardous waste, such as contaminated paper towels, pipettes, spent syringes, and glass vials, in a covered plastic container lined with a plastic bag. Label the container with a hazardous waste label identifying the hazard, the type of material being stored (i.e., pipettes, paper towels, etc.), the accumulation start date, and the laboratory of origin.

11.2.2. Open the waste container only for the time necessary to add the waste.

11.3. Liquid waste.

11.3.1. Accumulate liquid wastes, such as spent samples and spent solvents that are not reusable, in glass or steel containers appropriate for the type of sample being stored. For example, store caustic materials in glass containers and spent solvents that are not to be recycled in metal containers.

11.3.2. Place all containers storing hazardous liquid materials within secondary containment. Label the container with a hazardous waste label which identifies the hazard, type of material being stored (i.e., pipettes, paper towels, etc.), the accumulation start date, and the laboratory of origin.

11.3.3. Open the waste container only for the time necessary to add the waste.

11.4. Unused samples.

11.4.1. Return unused environmental samples to the Sample Management section for disposal.

12. Source Materials

12.1. "Petroleum Hydrocarbons, Total Recoverable," EPA Method 418.1 (Spectrophotometric, Infrared), Storet No. 45501 (1978).

12.2. "Hazardous and Mixed Waste," Administrative Requirement 10-3 in *Environment, Safety, and Health Manual*, chapter 1 of Los Alamos National Laboratory Manual (most recent edition).

POLYCHLORINATED BIPHENYLS (PCBs) IN SOIL
MOBILE LABORATORY METHOD

Analyte: Polychlorinated biphenyls	**Method No.:** MLO410
Matrix: Soil and miscellaneous solids	**Minimum Detection Limit:** 0.06 μg/g
Procedure: Capillary gas chromatography with electron-capture detection.	
Effective Date: 08/01/91	**Author:** Matthew Monagle Jeff Roberts

SAFETY NOTE: Before beginning this procedure, read all of the Material Safety Data Sheets for the chemicals listed in Sec. 7. Read Sec. 4.3 of the EM-9 Safety Manual for information on personal protective clothing and equipment. Read Sec. 12 of this procedure and Source Material 13.1 for proper waste disposal practices.

1. Principle of Method

1.1. This method is applicable to the determination of the following analytes:

Analyte	Chemical Abstract Service Registry Number
Arochlor 1016	12674-11-2
Arochlor 1221	11104-28-2
Arochlor 1232	11141-16-5
Archolor 1242	53469-21-9
Arochlor 1248	12672-29-6
Archolor 1254	11097-69-1
Archolor 1260	11095-82-5
Archolor 1262	37324-23-5

1.2. The applicability of this method for the determination of analytes other than those listed above must be demonstrated by the analyst.

1.3. Actual detection limits may vary from those listed above because detection limits are highly dependent upon chromatographic conditions and the unique matrix of any given sample.

1.4. This method is restricted to use by or directly under the supervision of analysts experienced in the use of gas chromatography and the interpretation of chromatographic data.

1.5. Although this procedure is designed to be detailed and comprehensive, it must be understood that situations may arise that require deviation from this procedure. This is particularly true of interpretation of chromatographic data. These deviations will be made at the discretion of the analyst and his/her supervisor and must be thoroughly documented.

2. Summary of Method

2.1. Samples are extracted into a suitable solvent.

2.2. Sample are cleaned up and/or diluted as necessary.

2.3. Samples are analyzed using a gas chromatograph and data is reduced using the associated data system.

2.4. Collected data is reviewed by a qualified analyst and the Arochlor(s) are identified and quantitated.

2.5. Applicable work is documented according to accepted laboratory operating procedures, and must satisfy all regulatory compliance requirements.

3. Sample Collection, Preservation, and Storage

3.1. Soil samples are placed in clean glass bottles and sealed with Teflon-lined caps.

3.2. Each sample is placed in a separate sealed glass bottle.

3.3. No preservation is required if the samples are submitted within 2 h of collection; otherwise the samples must be kept at 4°C until extracted and analyzed.

4. Interferences

4.1. Interference may be caused by contaminants in solvents, reagents, glassware, and other sample-processing equipment that lead either to discrete artifacts or elevated baselines in gas chromatograms.

4.1.1. The use of high-purity solvents and other chemicals will help to minimize interference.

4.1.2. Scrupulous cleaning of glassware and other equipment will help to minimize interference.

4.1.3. Strict adherence to standard laboratory practices will help minimize analyst-generated interferences.

4.2. Matrix interferences pose a significant problem in PCB analyses. Each sample may be cleaned up and/or diluted before analysis as necessary.

5. Safety

5.1. The toxicity and carcinogenicity of chemicals used in this method have not been precisely defined. Each chemical should be treated as a potential health hazard, and exposure minimized. Each person using this procedure shall know where the Material Safety Data Sheets (MSDSs) are located and shall have read them before using the chemicals.

5.2. PCB products have been tentatively classified as known or suspected human or mammalian carcinogens. Pure standard materials and stock standard solutions of these compounds should be handled with gloves in a fume hood.

5.3. Since the chemical composition of the samples is unknown, all samples shall be considered potentially hazardous, and must be handled and extracted in a fume hood.

5.4. All gas cylinders shall be secured and fitted with the proper regulators and fittings.

5.5. Two waste containers shall be available for the disposal of PCB contaminated waste: one for waste containing <500 ppm PCBs, the other for waste containing >500 ppm PCBs. These containers shall be properly labeled and shall be disposed of by EM-7.

5.6. The laboratory will make safety glasses available for all persons present in the laboratory, including guests. Safety glasses must be worn at all times by every person in the laboratory whenever operations requiring safety glasses are being performed by anyone in the laboratory.

5.7. The laboratory will make protective gloves, suitable for the chemicals used, available for employees. These are to be worn whenever contact with samples or chemicals is possible.

5.8. The laboratory will provide employees with protective aprons or lab coats that. are suitable for the chemicals used.

5.9. No one is allowed to perform laboratory work unless there is at least one other person in the immediate vicinity who is aware that laboratory work is being performed.

6. Apparatus

6.1. Electronic balance: capable of measurement to three decimal places.

6.2. Nitrogen evaporation apparatus with multiple sample capacity: Organomation N-EVAP, Model 111 or equivalent.

6.3. Beakers: glass, 100-, 150-, 250-, 400-, and 600-mL capacity.

6.4. Microliter syringes: assorted sizes.

6.5. Volumetric flasks: 1- to 25-mL, with ground-glass stoppers.

6.6. Sonicator bath.

6.7. Automatic liquid sampler (ALS) vials: 1-mL, with Teflon-lined crimp-seal caps.

6.8. Capping and uncapping device for ALS vials.

6.9. Gas chromatography system including:

- heated injection port,
- temperature programming capabilities,
- appropriate detection system,
- electronically controlled autosampler, and
- complete data system.

7. Reagents

7.1. Methylene chloride (Baker Resi-analyzed).

7.2. Acetone (Baker Resi-analyzed).

7.3. Methanol (HPLC-grade).

7.4. Hexane (pesticide-grade).

7.5. Reagent water (deionized). Charcoal filtered and/or distilled water demonstrated to be free from interferences.

7.6. Sodium sulfate (granular). Muffle overnight at 400°C. Alternatively, it can be Soxhlet-extracted with methylene chloride prior to use. Store in a covered container.

7.7. Stock standard solutions.

7.7.1. Prepare stock standard solutions within a concentration range of 20-50 mg/L by dilution of a certified solution or by accurately weighing the neat material and diluting to volume with hexane or iso-octane. If the purity of the neat material is assayed to be 96% or greater, the

weight can be used without correction to calculate the concentration of the stock standard solution.

7.7.2. Transfer the stock standard solutions into Teflon-sealed screw-cap glass bottles and store at 4°C. These standards may be kept for up to one year.

7.8. Secondary (calibration, working) standards.

7.8.1. Prepare calibration standards at a minimum of three concentration levels for each parameter of interest by dilution of the stock standards with hexane. One of the concentrations should be at or near the method detection limit. The subsequent standards should define the working linear range of the GC. Add a surrogate, 2,4,5-tribromobiphenyl, to each secondary standard at a level of 260 μg/L.

7.8.2. Transfer the secondary standards to Teflon-sealed, screw-cap glass bottles and store at 4°C. Secondary standards may be kept for up to six months.

7.9. Surrogate standard.

7.9.1. The surrogate compound in use is 2,4,5-tribromobiphenyl. The surrogate will be added to every sample run to monitor the performance of the extraction, cleanup, and analytical system. The surrogate standard will be prepared at a level of 2.6 mg/L. The surrogate will be spiked in each matrix to give a final concentration of 260 mg/L.

7.10 Matrix spike standard.

7.10.1. Matrix spikes are composed of any one of the three Arochlor mixtures. The matrix spike solution should be made to deliver a recovery amount somewhere in the middle of the calibration range of the instrument. The matrix spike solution will be made using methanol as a solvent.

8. Analytical Conditions

8.1. Gas chromatographic conditions are established in accordance with the requirements of the individual analyst. The following criteria must be met:

- Sufficient resolution to allow accurate identification and quantitation.
- Sufficient sensitivity to allow accurate quantitation to the minimum detection limit.
- Sufficient ability for the system to thermally clean itself to minimize sample carryover and/or elevated baselines.

9. Quality Assurance and Data Interpretation Requirements

9.1. The Quality Control (QC) requirements are defined in a tiered structure as follows:

Tier 1: 1-point calibration every day.
1 method blank every day.

Tier 2: 3-point initial calibration, daily check standard.
BFB tune check every day.
1 method blank every day.

Tier 3: 5-point initial calibration, daily check standard.
BFB tune check every day.
1 method blank per analytical batch.
Blind QC samples at a rate of no more than 10%.
Matrix spike and matrix spike duplicate for each analytical batch.
12-h clock for tune check and daily check standard.

9.2. Under Tier 2 and Tier 3 QC requirements, blanks are analyzed at a frequency of one for every 20 samples of similar matrix, or whenever samples are extracted by the same procedure, whichever is more frequent. The method blank should contain less than the reporting limit of any Arochlor mixture, and should not contain extraneous peaks that could inhibit the accurate quantitation or identification of any Arochlor.

9.3. Matrix spike and matrix spike duplicate recovery are required for Tier 2 QC. In order to demonstrate the efficacy of the extraction procedure on any given matrix, the recovery of the spiking compound is monitored. The sample chosen to be spiked should be representative of the samples from a given project.

9.3.1. Under Tier 3 QC requirements, matrix spike and matrix spike duplicate data are generated for every 20 samples of a given matrix type prepared by the same method.

9.3.2. Matrix spike/matrix spike duplicates and the original unspiked sample must be concentrated to the same final volume and analyzed at the same dilution level. High levels of Arochlors in the matrix may cause the matrix spike and duplicate recoveries to become diluted out.

9.3.3. Spike recovery is evaluated in terms of percent recovery and the relative percent difference (RPD) between the recoveries obtained in the matrix spike and the matrix spike duplicate. Data generated by this methodology will be used to generate control limits for recoveries and RPDs.

10. Procedure

10.1. Cleaning of glassware and equipment.

10.1.1. Glassware and other equipment that will come into direct contact with samples, standards, or reagents must be scrupulously clean to minimize contamination and interferences.

10.1.2. Unused vials, glass bottles, caps, and lids do not need to be washed before use. Clean all previously used glassware and equipment immediately after use by thoroughly rinsing with hexane or with the last solvent used in the glassware. Follow this rinse by washing with hot water and detergent. Rinse thoroughly with tap water, distilled water, and then rinse generously with acetone. Allow glassware to dry in the hood, then dry in a 150°C oven for 1 h.

10.2. Sample extraction. Refer to Method MLO510 for the extraction procedure.

10.3. Identification of PCBs.

10.3.1. Compare sample chromatograms to standard Arochlor chromatograms to determine which, if any, of the Arochlors are present in the sample. Determine which Arochlor or combination of Arochlors, and in what proportion, will produce a chromatogram most similar to that of the sample.

PCBs tend to degrade with age. This may cause the loss of certain peaks, particularly the earlier-eluting peaks, which represent the lower-molecular-weight compounds. This phenomenon can make identification more difficult, particularly if the analyst is not aware of it.

Because of the difficulties involved in the identification of these multicomponent residues, final judgment should be made by an experienced analyst.

11. Quantitation

11.1. Separately quantitate each peak using the curve established earlier. Alternatively, the sum of the peak areas may be used to calculate the concentration of the compounds of interest.

11.2. Average the calculated values for each peak in a given Arochlor to give the extract concentration in μg/mL. Eliminate obvious outliers before averaging.

NOTE: If the calculated values for each peak appear to vary greatly, it may indicate that the Arochlor was incorrectly identified.

11.3. Multiply the resulting number by the volume of solvent used in the extraction procedure. Divide by the initial weight and adjust for dilution if necessary.

12. Proper Waste Disposal Practices

12.1. General waste management.

12.1.1. Each analyst in the section shall be given Waste Generator Training by EM-8 within 90 days of the date of hire.

12.1.2. Wherever possible, minimize the generation of waste through reduction, reuse, or recycling. Wherever possible, segregate containers to reflect the nature of the hazardous waste and the eventual waste disposal methods. For example, chlorinated solvent wastes should be segregated from flammable, nonchlorinated solvents and >50-ppm-contaminated waste should be segregated from <50-ppm PCB-contaminated waste. This is especially important in analysis areas where the waste generated is considered to be mixed waste.

12.1.3. Categorize the waste using an EM-8 Waste Profile Form.

12.1.4. Upon completion of the Waste Profile Form, dispose of the waste by completing a Waste Disposal Request Form from EM-7. Approximately 30 days is required for the disposal of waste after the completion of the listed forms.

12.2. Solid waste.

12.2.1. Accumulate solid hazardous waste, such as contaminated paper towels, pipettes, spent syringes, and glass vials, in a covered plastic container lined with a plastic bag. Label the container with a hazardous waste label identifying the hazard, the type of material being stored (i.e., pipettes, paper towels, etc.), the accumulation start date, and the laboratory of origin.

12.2.2. Open the waste container only for the time necessary to add the waste.

12.3. Liquid waste.

12.3.1. Accumulate liquid wastes, such as spent samples and spent solvents that are not reusable, in glass or steel containers appropriate for the type of sample being stored. For example, store caustic materials in glass containers and spent solvents that are not to be recycled in metal containers.

12.3.2. Place all containers storing hazardous liquid materials within secondary containment. Label the container with a hazardous waste label which

identifies the hazard, type of material being stored (i.e., pipettes, paper towels, etc.), the accumulation start date, and the laboratory of origin.

12.3.3. Open the waste container only for the time necessary to add the waste.

12.4. Unused samples.

12.4.1. Return unused environmental samples to the Sample Management section for disposal.

13. Source Materials

13.1. "Hazardous and Mixed Waste," Administrative Requirement 10-3, in *Environment, Safety, and Health Manual*, Los Alamos National Laboratory Manual, Chapter 1 (most recent edition).

13.2. Test Methods for Evaluating Solid Waste Physical/Chemical Methods, SW-846, 3d ed., 1988.

SEMIVOLATILE ORGANICS IN SOLID MATRICES: SOLVENT EXTRACTION - GC/MS MOBILE LABORATORY METHOD

Analytes: Base Neutral/Acid Extractables (BNAs) Refer to Table VIII	**Method No.:** MLO500
Matrix: Soil, sediment, and sludges	**Minimum Detection Limit:** 1.0-2.0 mg/kg nominal (matrix-dependent)
Procedure: Extraction and concentration of analytes with an appropriate solvent followed by capillary-column GC/MS analysis.	**Accuracy and Precision:** These parameters are analyte-dependent and are greatly influenced by the matrix.
Effective Date: 04/03/93	**Authors:** Martin W. Koby Matthew Monagle

SAFETY NOTE: **Before beginning this procedure, read all of the Material Safety Data Sheets for the chemicals listed in Sec. 5. Read Sec. 4.3 of the EM-9 Safety Manual for information on personal protective clothing and equipment. Read Sec. 13 of this procedure and Source Material 14.4 for proper waste disposal practices.**

1. Principle of Method

1.1. Analytes are extracted from various matrices using procedure MLO510. Extracts are then concentrated to a small volume (typically 0.3 mL) and analyzed by gas chromatography/mass spectrometry. The mass spectrometer is operated in a scanning, electron-impact (EI) ionization mode. The gas chromatograph is temperature-programmed to effectively separate the wide range of analytes.

Analytes from a wide variety of compound classes can be determined using this method. Table VIII lists the compounds in the current Hazardous Substance List which are analyzed routinely. Table IX contains the Appendix IX list of compounds that are analyzed on a non-routine basis. Table X provides a list of compounds which can be incorporated into an analysis if the need arises. (Tables VIII, IX, and X are found at the end of this procedure.)

1.2. Qualitative analysis is performed by comparing retention time and mass-spectral data of unknowns to those of a standard mix for which the analytical system has been calibrated. EPA-defined criteria are used to establish the validity of a compound identity.

1.3. Quantitation is achieved using the internal standard technique. Once the identity of a compound is determined, quantitation is based on the integrated abundance of a characteristic ion for that compound. This value is compared to the characteristic ion area of the internal standard nearest the retention time of the compound so that a ratio between the two can be determined. Additional factors taken into account include the response factor of the compound being measured, the final volume of extract, and the sample aliquot extracted.

2. Sensitivity

2.1. Practical limits of quantitation are generally in the range of 1 to 2 mg/kg for low-level solid matrices. Matrices that are relatively free of interferences have lower attainable limits of detection than those having large amounts of coextractible material, such as drum waste. Medium-level extracts have a nominal detection limit of 20 mg/kg.

2.2. The values in Step 2.1 are analyte-dependent and can be greatly influenced by matrix constituents, sample inlet conditions, and general analyte reactivity. Response factors tend to show linearity to 180 μg/mL; however, specific compounds may show decreasing chromatographic performance or detector saturation at this concentration.

3. Accuracy and Precision

3.1. Based upon fixed-based laboratory surrogate and spike data, analyte recoveries are typically in the 60-110% range. Recoveries can be expected to vary depending upon the analyte and matrix complexity.

3.2. Long-range precision data is based upon matrix spike and spike duplicate percent recovery and the relative percent difference between the two. Refer to Section 11, Table VII.

4. Interferences

4.1. Any material that will cause an increase in background signal or an elevated baseline or result in discrete chromatographic peaks that are not attributable to target compounds may interfere with the identification and quantitation of a given analyte. Examples are environmental matrices containing high concentrations of humic material, oils, hydrocarbons, lipids, sulfur, or polar material such as alcohols and carboxylic acids.

4.2. Excessive particulate matter in water, extreme alkalinity or acidity, reactive material, intense light, and high temperature can negatively effect analyte recovery.

5. Sample Collection and Storage

5.1. All sampling equipment should be free of introduced contaminants.

5.2. Soil or sediment samples are typically collected in amber or clear glass wide-mouth bottles. Caps should have Teflon liners; however, aluminum foil can be substituted for Teflon if necessary. Excessive headspace should be avoided.

5.3. Samples should be stored, unpreserved, in a refrigerator at 4°C until extraction is initiated.

6. Sample holding times

6.1. Soil or sediment samples must be extracted within 14 d of receipt.

6.2. Sample extracts must be analyzed within 40 d of extraction.

7. Apparatus

7.1. Gas chromatograph/mass spectrometer: GC capable of temperature programming from 25 to 300°C. The mass spectrometer, using electron-impact ionization, must be capable of scanning a mass range 35-500 AMU in 1.0 s or less.

7.2. Data system: capable of initiating and controlling data acquisition, storing spectral and chromatographic data, and performing mass-spectral library searches.

7.3. Chromatographic column: 5% methyl phenyl silicone, 30-m x 0.25-mm-i.d. x 0.5-mμ film thickness, J & W DB-5.625 or equivalent.

7.4. Glass vials: 1.8-mL crimp cap, 1.8-, 7-, 10-, 12-, 15-, and 40-mL capacity screw cap with septa.

7.5. Volumetric flasks: 1-, 2-, 5-, 10-, 25-, 50-, 100-, and 250-mL with stoppers.

7.6. Disposable glass pipettes: 1-, 2-, 5-, and 10-mL.

7.7. Adjustable low-volume pipettors: 10- and 250-μL capacity with disposable capillary tips. SMI brand or equivalent.

7.8. Syringes: glass, gas-tight, 10-, 25-, 50-, and 100-μL volume.

8. Reagents

8.1. Methylene chloride (Baker Resi-analyzed).

8.2. Acetone (Baker Resi-analyzed).

8.3. Methanol (HPLC-grade).

8.4. Hexane (pesticide-grade).

8.5. Reagent water (deionized). Charcoal filtered and/or distilled water demonstrated to be free from interferences.

9. Analytical Standards

9.1. All analytical standards are refrigerated at -20°C. Working standards typically have a shelf life of three months. Stock standards are considered usable for at least six months or until degradation becomes apparent.

The following analytical standards are specified by EPA protocol to be used in the analysis of base/neutral acid extractables. They are readily available from any number of chemical suppliers as neat standards or as stock solutions. Currently, we use standard mixes formulated by Ultra Scientific, Inc.

9.2. **Internal Standards** (ISs). The IS compounds are added to extracts immediately prior to instrumental analysis. They are used to facilitate both qualitative and quantitative analysis. Extracts are spiked with an IS mix so that a final concentration of 40 μg/mL of each component is obtained.

9.2.1. Internal standard mix (4000 μg/mL or 2000 μg/mL in CH_2Cl_2) depending on the supplier. This mix is used undiluted and spiked into the samples, blanks, and all calibration standards so that a final concentration of 40 μg/mL is obtained. Internal standards are:

1,4-Dichlorobenzene-d_4
Naphthalene-d_8
Acenaphthene-d_{10}
Phenanthrene-d_{10}
Chrysene-d_{12}
Perylene-d_{12}

9.3. **Decafluorotriphenylphosphine** (DFTPP). DFTPP is used to verify the performance of the mass spectrometer. The DFTPP spectrum must meet established EPA ion abundance criteria before instrument calibration and sample analysis are performed. The working standard DFTPP concentration is 50 μg/mL in methylene chloride.

9.4. **Initial calibration standards.** These standards contain all target compounds of interest at five different concentrations, typically 20.0, 50.0, 80.0, 120.0, and 160.0 μg/mL of each analyte. These standards are made by volumetric dilution

of 2000-μg/mL stock standards with methylene chloride. Appropriate amounts of internal standards and surrogate are included.

9.5. **Daily calibration standards.** These standards contain 50.0 μg/mL of all target compounds of interest in methylene chloride. This standard is used to demonstrate instrument stability in terms of analyte response (response factor) and relative retention time.

10. GC/MS Calibration

10.1. This application uses a slightly polar methyl silicone stationary phase bonded to a fused-silica capillary column, such as the J&W DB-5.625, Supelco SPB-5, or Quadrex 007-2. Column dimensions are nominally 30-m x 0.25-mm-id, 0.50-mμ film thickness.

10.2. The following gas chromatographic parameters are used for data acquisition:

Initial temp.: 50°C	Carrier: He
Initial time: 0.0 min	Flow: 1.0 mL/min
Final temp.: 315°C	Inlet temp.: 280°C
Final time: 20 min	Interface temp.: 300°C
Rate: 15°C/min	

Some variations are allowed for final temperature, final time, and flow rate when they improve the chromatography or analytical performance.

10.3. DFTPP tuning.

10.3.1. The quadrapole mass spectrometer is operated in a scanning electron-impact ionization mode. The spectrometer is tuned with the calibration compound perfluorotributylamine (PFTBA) so that a 50-ng injection of decafluorotriphenylphosphine (DFTPP) results in a spectrum which satisfies the key ion abundance and resolution criteria outlined in Table I.

TABLE I: KEY ION ABUNDANCE AND RESOLUTION CRITERIA

Mass	Ion Abundance Criteria
51	30.0-60.0% of mass 198
68	<2.0% of mass 69
70	<2.0% of mass 69
127	40.0-60.0% of mass 198
197	<1.0% of mass 198

10.4.4. Relative retention times of each compound from each standard should agree within 0.06 retention time units.

10.4.5. Under Tier Three QC requirements, if the % RSD for any CCC, or the minimum RF for any SPCC is not met, corrective action must be taken. An individual calibration point or the entire calibration curve may need reanalysis.

10.5. Continuing calibration.

On a daily basis, immediately after DFTPP criteria have been demonstrated, a continuing calibration standard containing 50 μg/mL of each target analyte is analyzed. The relative response factor for each analyte is compared with the corresponding average response factor obtained from the initial calibration.

10.5.1. Under Tier Two and Tier Three QC criteria, each continuing calibration must be evaluated for and meet the criteria listed below:

10.5.1.1. All SPCCs must have a minimum response factor not less than 0.050 (see Table IV).

TABLE IV. SYSTEM PERFORMANCE CHECK COMPOUNDS FOR WHICH AVERAGE RF MUST BE >0.05
N-nitroso-di-n-propylamine
Hexachlorocyclopentadiene
2,4-Dinitrophenol
4-Nitrophenol

10.5.1.2. The percent difference between the continuing calibration relative response factor and the average relative response factor and the average relative response from the initial calibration must not be greater than 25.0% for any CCC. Table III lists these analytes. If this requirement is met, the calibration is assumed to be valid.

The percent difference is calculated using the following equation:

$$\% \text{ Difference} = \frac{RFi - RFc}{RFi} \times 100 \quad ,$$

where RFi = average response factor from the initial calibration, and
RFc = response factor from the current continuing calibration.

10.5.1.3. Under Tier Three QC requirements, the percent difference between the continuing calibration relative response factor and the average relative response from the initial calibration should not be greater than 20.0% for any target compound for which the instrument is calibrated. If the percent difference exceeds this value it is considered as a warning limit.

10.5.2. If the preceding calibration criteria are not met, corrective action is taken and the continuing calibration standard is reanalyzed. If the criteria are still not met, a new three- or five-point initial calibration is performed.

10.5.3. Once all continuing calibration criteria have been met, the method ID file is updated with the current relative retention times (RRTs) and response factors (RFs) before acquiring and processing sample data.

10.5.4. The method ID file contains retention-time and mass-spectral data pertinent to a given target compound list. It is defined and edited by the user and resides on the GC/MS data system.

11. Quality Assurance and Data Interpretation Requirements

11.1. The Quality Control requirements are defined in a tiered structure as follows:

Tier 1: 1-point calibration every day.
1 method blank every day.

Tier 2: 3-point initial calibration, daily check standard.
BFB tune check every day.
1 method blank every day.

Tier 3: 5-point initial calibration, daily check standard.
BFB tune check every day.
1 method blank per analytical batch.

Blind QC samples at a rate of no more than 10%.
Matrix spike and matrix spike duplicate for each analytical batch.
12-h clock for tune check and daily check standard.

11.2. All calibration criteria listed in the previous section must be met before analyzing samples.

11.3. **Method blank analysis.** A method blank is a volume of reagent water or a purified solid material which is taken through the entire analytical procedure. The weight or volume of the blank must approximate that of the samples being analyzed.

11.3.1. Under Tier Two and Tier Three QC requirements, blanks are analyzed at a frequency of one for every 20 samples of similar matrix or whenever samples are extracted by the same procedure, whichever is more frequent. The following criteria are checked immediately after blank analysis:

- The method blank should contain less than five times the practical quantitation limit (PQL) of phthalate esters in the target compound list.

- All other analytes present on the target compound list should not be present at concentrations greater than the PQL.

- Recovery of all surrogate compounds must be within specified limits (Table V). If this criterion is not met, reanalyze or reextract another blank to determine whether the incident is isolated or an out-of-control status exists.

TABLE V. BNA SURROGATE SPIKE RECOVERY LIMITS IN PERCENT

Surrogate Compound	Water	Soil
Nitrobenzene-d_5	35-114	23-120
2-Fluorobiphenyl	43-116	30-115
Terphenyl-d_{14}	33-141	18-137
Phenol-d_5	10-94	24-113
2-Fluorophenol	21-100	25-121
2,4,6-Tribromophenol	10-123	19-122

11.3. **Surrogate spike requirements.** Each sample prepared and analyzed for semivolatile compounds is fortified with known amounts of base-neutral and acid extractable compounds. By evaluating their recovery, measured as a percentage, the analyst can draw conclusions concerning the analytical efficiency on a sample-by-sample basis.

11.3.1. Surrogate spike recoveries are considered to be acceptable if they fall within the range specified in Table V.

The following conditions indicate unacceptable surrogate recovery: (1) recovery of any one surrogate in either the base-neutral or acid fraction is less than 10%, and (2) recoveries of any two surrogate compounds in either base-neutral or acid fraction are out of recovery limits.

11.3.2. When surrogate spike recoveries are determined to be out of control the analyst needs to determine if the cause is matrix- or process-dependent. Reextraction should be requested when there is sufficient sample and holding time can be met. Whichever conclusion is reached needs to be addressed in the case narrative and/or anomaly summary. Corrective action will be implemented to alleviate the causes of the out-of-control condition.

11.4. **Matrix spike and matrix spike duplicate recovery requirements.** In order to evaluate the matrix effect of a sample upon the analytical methodology employed, known concentrations of base/neutral and acid target compounds are added to duplicates of a given sample (Table VI). The sample chosen to be spiked should be representative of the samples from a given project.

TABLE VI. BNA MATRIX SPIKE COMPOUNDS

Compound	Fraction	Amount added (μg)
1,2,4-Trichlorobenzene	BN	50
Acenaphthene	BN	50
2,4-Dinitrotoluene	BN	50
Pyrene	BN	50
N-nitroso-di-n-propylamine	BN	50
1,4-Dichlorobenzene	BN	50
Pentachlorophenol	Acid	100
Phenol	Acid	100

TABLE VI. (cont)		
Compound	Fraction	Amount added (μg)
2-Chlorophenol	Acid	100
4-Chloro-3-methylphenol	Acid	100
4-Nitrophenol	Acid	100

11.4.1. Under Tier Three QC requirements, matrix spike and matrix spike duplicate data are generated for every twenty samples of a given matrix type prepared by the same method.

11.4.2. Matrix spike/matrix spike duplicates and the original unspiked sample must be concentrated to the same final volume and analyzed at the same dilution level. If high levels of target compounds are detected that are not matrix spike compounds, the original sample only needs to be diluted to enable compound quantitation.

11.4.3. Spike recovery is evaluated in terms of percent recovery and the relative percent difference (RPD) between individual spike compounds in the MS and MSD. This data can be used to evaluate the long term precision and accuracy of the method. See Table VII for spike recovery limits.

TABLE VII. BNA MATRIX SPIKE RECOVERY LIMITS - SOIL

Compound	Percent recovered			RPD
1,2,4-Trichlorobenzene	38	-	107	23
Acenaphthene	31	-	137	19
2,4-Dinitrotoluene	28	-	89	47
Pyrene	35	-	142	36
N-nitroso-di-n-propylamine	41	-	126	38
1,4-Dichlorobenzene	28	-	104	27
Pentachlorophenol	17	-	109	47

TABLE VII. (cont)				
Compound	Percent recovered			RPD
Phenol	26	-	90	35
2-Chlorophenol	25	-	102	50
4-Chloro-3-methylphenol	26	-	103	33
4-Nitrophenol	11	-	114	50

11.5. Under Tier Three QC requirements, blind spikes are regularly extracted and analyzed as an independent check of method accuracy. Standard reference materials should resemble submitted matrices as closely as possible.

11.6. **Sample analysis.** Samples must be analyzed within 40 d of sample extraction.

11.6.1. Internal standard response from each sample injection must agree by a factor of two (-50% to 200%) with the internal standard response from the most recent continuing calibration standard.

11.6.2. Sample internal standard retention times must not differ by more than 30 s from the continuing calibration standard.

11.6.3. Each analytical run is checked for detector saturation for each target compound positively identified.

11.6.4. All data is evaluated for correctness of dilution. When compounds are detected at concentrations greater than 160 ppm, the sample extracts are diluted and reanalyzed.

11.6.5. Discrete chromatographic peaks that are not identified as target compounds are treated as tentatively identified compounds (TICs). These compounds may be identified if the customer requests this service. A tentative identification is made by comparison of the unknown spectra with a mass-spectral database.

11.7. Qualitative analysis.

11.7.1. Target compounds detected in sample injections are positively identified on the basis of relative retention time (RRT) and mass spectral criteria. See Table VIII for a list of analytes and their corresponding characteristic ions.

11.7.1.1. The sample component's relative retention time must agree within ±0.06 RRT units of that component in the continuing calibration standard.

11.7.1.2. Qualitative verification requires the following conditions to be met:

- All ions present in the standard mass spectrum at a relative intensity >10% must be present in the sample spectrum.

- The relative intensities of ions specified above must agree within 20%.

- Ions present at relative intensities >10% in the sample spectrum but not present in the standard spectrum must be accounted for by generating extracted ion current profiles (EICPs) for the relevant ions.

- Compounds present in samples but determined not to be target compounds are treated as TICs. A maximum of 20 discrete compounds may be identified (at customer's discretion) through comparison of unknown spectra with a mass-spectral library database. TICs will be searched only when their relative ion concentration (RIC) area is greater than 10% of the nearest internal standard RIC area.

11.8. **Quantitative analysis.** When a target compound has been positively identified, quantitation is based on the EICP of the primary characteristic ion using the internal standard technique. The internal standard used will be the one nearest the retention time of the analyte.

11.8.1. The following calculations are used to quantify target analytes:

Low level soil/sludge/sediment/waste

$$\text{conc. of analyte (ng/g)} = \frac{A_x \times I_s \times V_t}{A_{is} \times R_f \times W_s \times V_s \times D} ,$$

where A_x = area of the characteristic ion for the analyte being measured,
I_s = amount of internal standard injected (ng),
V_t = volume of total extract taking into account any dilutions,

A_{is} = area of characteristic ion for the internal standard,
R_f = response factor for the compound being measured,
W_s = weight of sample extracted or diluted in grams, and
V_s = volume of extract injected (μL).

$$D = \frac{(100 - \%\ \text{moisture in sample})}{100} ,$$

where D = 1.0 if the data will be reported on a wet-weight basis.

11.8.2. Calculation of response factors (RF).

$$RF = \frac{(Ax)\ (Cis)}{(Ais)\ (Cx)} ,$$

where Ax = area of the characteristic ion for the analyte being measured,
Cis = concentration of the specific internal standard (40 ng/μL),
Ais = area of the characteristic ion of the specific internal standard, and
Cx = concentration of the compound being measured (ng/μL).

11.8.3. Percent moisture determination. When sample concentrations are to be reported on a dry weight basis, percent moisture is calculated using the following equation:

$$\%\ M = \frac{Sw - Sd}{Sw} \times 100 ,$$

where Sw = wet weight of the soil aliquot less the container weight, and
Sd = dry weight of the soil aliquot less the container weight after oven drying at 105°C for 24 h.

12. Reporting

Analytical results are reported using one of two target compound lists (TCLs) depending on the requirements of the submitter. The Appendix IX TCL list (ground water monitoring) includes the Hazardous Substance List (HSL) plus 43 additional analytes. Table IX lists HSL target compounds while Table X lists the Appendix IX target compounds. Compounds on the HSL list are routinely analyzed for and reported. Appendix IX compounds are not routinely analyzed.

13. Proper Waste Disposal Practices

13.1. General waste management.

13.1.1. Each analyst within the section shall be given Waste Generator Training by EM-8 within 90 days of date of hire.

13.1.2. Wherever possible, the generation of waste shall be minimized through reduction, reuse, or recycling. Wherever possible, containers should be segregated to reflect the nature of the hazardous waste and the eventual waste-disposal methods. For example, chlorinated solvent wastes should be segregated from flammable, non-chlorinated solvents and >50-ppm PCB-contaminated waste should be segregated from <50-ppm PCB contaminated waste. This is especially important in analysis areas where the waste generated is considered to be mixed waste.

13.1.3. Categorized the waste using a Waste Profile Form from EM-8.

13.1.4. Upon completion of a Waste Profile Form, the waste is disposed of by completing a Waste Disposal Request Form from EM-7. Approximately 30 days is required for the disposal of waste after the completion of the listed forms.

13.2. Solid waste.

13.2.1. Solid hazardous waste, such as contaminated paper towels, pipettes, spent syringes, and glass vials, is accumulated in a covered plastic container lined with a plastic bag. The container is labeled with a hazardous waste label identifying the hazard, the type of material being stored (i.e., pipettes, paper towels, etc.), the accumulation start date, and the laboratory of origin.

13.2.2. The waste container is opened only for the time necessary to add the waste.

13.3. Liquid waste.

13.3.1. Liquid wastes, such as spent samples and spent solvents that are not reuseable, are accumulated in glass or steel containers appropriate for the type of sample being stored. For example, caustic materials should be stored in glass containers whereas spent solvents that are not to be recycled should be stored in metal containers.

13.3.2. All containers storing hazardous liquid materials must be secondarily contained. The container is labeled with a hazardous waste label identifying the hazard, the type of material being stored (i.e., pipettes, paper towels, etc.), the accumulation start date, and the laboratory of origin.

13.3.3. The waste container is opened only for the time necessary to add the waste.

13.4. Unused samples.

13.4.1. Return unused environmental samples to the Sample Management section for disposal.

14. Source Materials

14.1. USEPA Contract Laboratory Program, Statement of Work for Organic Analysis Multi-media, Multi-Concentration, 2/88.

14.2. Test Methods for Evaluating Solid Waste Physical/Chemical Methods, SW-846, ed. 1988.

14.3. Sorbent Extraction Technology, K.C. Van Horne, Analytical International, Inc. 1985.

14.4. "Hazardous and Mixed Waste," Administrative Requirement 10-3, in *Environment, Safety, and Health Manual*, Los Alamos National Laboratory Manual, Chapter 1 (most recent edition).

TABLE VIII. CHARACTERISTICS IONS FOR SEMIVOLATILE COMPOUNDS

Compound	Retention time (min)	Primary ion	Secondary ion(s)
2-Picoline	3.75[a]	93	66, 92
Aniline	5.68	93	66, 65
Phenol	5.77	94	65, 66
Bis(2-chloroethyl) ether	5.82	93	63,95
2-Chlorophenol	5.97	128	64, 130
1,3-Dichlorobenzene	6.27	146	148, 111
1,4-Dichlorobenzene-d_4 (I.S.)	6.35	152	150, 115
1,4-Dichlorobenzene	6.40	146	148, 111
Benzyl alcohol	6.78	108	79, 77
1,2-Dichlorobenzene	6.85	146	148, 111
N-Nitrosomethylethylamine	6.97	88	42, 88, 43, 56
Bis(2-chloroisopropyl) ether	7.22	45	77, 121
Ethyl carbamate	7.27	62	62, 44, 45, 74
Thiophenol (benzenethiol)	7.42	110	110, 66, 109, 84
Methyl methanesulfonate	7.48	80	80, 79, 65, 95
N-Nitrosodi-n-propylamine	7.55	70	42, 101, 130
Hexachloroethane	7.65	117	201, 199
Maleic anhydride	7.65	54	54, 98, 53, 44
Nitrobenzene	7.87	77	123, 65
Isophorone	8.53	82	95, 138
N-Nitrosodiethylamine	8.70	102	102, 42, 57, 44, 56
2-Nitrophenol	8.75	139	109, 65
2,4-Dimethylphenol	9.03	122	107, 121
p-Benzoquinone	9.13	108	54, 108, 82, 80
Bis(2-chloroethoxy) methane	9.23	93	95, 123
Benzoic acid	9.38	122	105, 77
2,4-Dichlorophenol	9.48	162	164, 98

TABLE VIII. (cont)

Compound	Retention time (min)	Primary ion	Secondary ion(s)
Trimethyl phosphate	9.53	110	110, 79, 95, 109, 140
Ethyl methanesulfonate	9.62	79	79, 109, 97, 45, 65
1,2,4-Trichlorobenzene	9.67	180	182, 145
Naphthalene-d_8 (I.S.)	9.75	136	68
Naphthalene	9.82	128	129, 127
Hexachlorobutadiene	10.43	225	223, 227
Tetraethyl pyrophosphate	11.07	99	99, 155, 127, 81, 109
Diethyl sulfate	11.37	139	139, 45, 59, 99, 111, 125
4-Chloro-3-methylphenol	11.68	107	144, 142
2-Methylnaphthalene	11.87	142	141
2-Methylphenol	12.40	107	107, 108, 77, 79 90
Hexachloropropene	12.45	213	213, 211, 215, 117, 106, 141
Hexachlorocyclopentadiene	12.60	237	235, 272
N-Nitrosopyrrolidine	12.65	100	100, 41, 42, 68, 69
Acetophenone	12.67	105	71, 105, 51, 120
4-Methylphenol	12.82	107	107, 108, 77, 79 90
2,4,6-Trichlorophenol	12.85	196	198, 200
o-Toluidine	12.87	106	106, 107, 77, 51, 79
3-Methylphenol	12.93	107	107, 108, 77, 79, 90
2-Chloronaphthalene	13.30	162	127, 164
N-Nitrosopiperidine	13.55	114	42, 114, 55, 56,41
1,4-Phenylenediamine	13.62	108	108, 80, 53, 54, 52
1-Chloronaphthalene	13.65[a]	162	127, 164
2-Nitroaniline	13.75	65	92, 138
5-Chloro-2-methylaniline	14.28	106	106, 141, 140, 77, 89
Dimethyl phthalate	14.48	163	194, 164

TABLE VIII. (cont)

Compound	Retention time (min)	Primary ion	Secondary ion (s)
Acenaphthylene	14.57	152	151, 153
2,6-Dinitrotoluene	14.62	165	63, 89
Phthalic anhydride	14.62	104	104, 76, 50, 148
o-Anisidine	15.00	108	80, 108, 123, 52
3-Nitroaniline	15.02	138	108, 92
Acenaphthene-d_{10} (I.S.)	15.05	164	162, 160
Acenaphthene	15.13	154	153, 152
2,4-Dinitrophenol	15.35	184	63, 154
2,6-Dinitrophenol	15.47	162	162, 164, 126, 98, 63
4-Chloroaniline	15.50	127	127, 129, 65, 92
Isosafrole	15.60	162	162, 131, 104, 77, 51
Dibenzofuran	15.63	168	139
2,4-Diaminotoluene	15.78	121	121, 122, 94, 77, 104
2,4-Dinitrotoluene	15.80	165	63, 89
4-Nitrophenol	15.80	139	109, 65
2-Naphthylamine	16.00[a]	143	115, 116
1,4-Naphthoquinone	16.23	158	158, 104, 102, 76, 50, 130
p-Cresidine	16.45	122	122, 94, 137, 77, 93
Dichlorovos	16.48	109	109, 185, 79, 145
Diethyl phthalate	16.70	149	177, 150
Fluorene	16.70	166	165, 167
2,4,5-Trimethylaniline	16.70	120	120, 135, 134, 91, 77
N-Nitrosodibutylamine	16.73	84	84, 57, 41, 116, 158
4-Chlorophenyl phenyl ether	16.78	204	206, 141
Hydroquinone	16.93	110	110, 81, 53, 55
4,6-Dinitro-2-methylphenol	17.05	198	51, 105

TABLE VIII. (cont)

Compound	Retention time (min)	Primary ion	Secondary ion (s)
Resorcinol	17.13	110	110, 81, 82, 53, 69
N-Nitrosodiphenylamine	17.17	169	168, 167
Safrole	17.23	162	162, 162, 104, 77, 103, 135
Hexamethyl phosphoramide	17.33	135	135, 44, 179, 92, 42
3-(Choromethyl)pyridine hydrochloride	17.50	92	92, 127, 129, 65, 39
Diphenylamine	17.54[a]	169	168, 167
1,2,4,5-Tetrachlorobenzene	17.97	216	216, 214, 179, 108, 143, 218
1-Naphthylamine	18.20	143	143, 115, 89, 63
1-Acetyl-2-thiourea	18.22	118	43, 118, 42, 76
4-Bromophenyl phenyl ether	18.27	248	250, 141
Toluene diisocyanate	18.42	174	174, 145, 173, 146, 132, 91
2,4,5-Trichlorophenol	18.47	196	196, 198, 97, 132, 99
Hexachlorobenzene	18.65	284	142, 249
Nicotine	18.70	84	84, 133, 161, 162
Pentachlorophenol	19.25	266	264, 268
5-Nitro-2-methylaniline	19.27	152,	77, 152, 79, 106, 94
Thionazine	19.35	107	96, 107, 97, 143, 79, 68
4-Nitroaniline	19.37	138	138, 65, 108, 92, 80, 39
Phenanthrene-d_{10} (I.S.)	19.55	188	94, 80
Phenanthrene	19.62	178	179, 176
Anthracene	19.77	178	176, 179
1,4-Dinitrobenzene	19.83	168	168, 75, 50, 76, 92, 122
Mevinphos	19.90	127	127, 192, 109, 67, 164
Naled	20.03	109	109, 145, 147, 301, 79, 189
1,3-Dinitrobenzene	20.18	168	168, 76, 50, 75, 92, 122
Diallate (cis or trans)	20.57	86	86, 234, 43, 70

TABLE VIII. (cont)

Compound	Retention time (min)	Primary ion	Secondary ion (s)
1,2-Dinitrobenzene	20.58	168	168, 50, 63, 74
Diallate (trans or cis)	20.78	86	86, 234, 43, 70
Pentachlorobenzene	21.35	250	250, 252, 108, 248, 215, 254
5-Nitro-2-methoxyaniline	21.50	168	168, 79, 52, 138, 153, 77
Pentachloronitrobenzene	21.72	237	237, 142, 214, 249, 295, 265
4-Nitroquinoline-1-oxide	21.73	174	174, 101, 128, 75, 116
Di-n-butyl phthalate	21.78	149	150, 104
2,3,4,6-Tetrachlorophenol	21.88	232	232, 131, 230, 166, 234, 168
Demeton-o	22.72	88	88, 89, 60, 61, 115, 171
Fluoranthene	23.33	202	101, 203
1,3,5-Trinitrobenzene	23.68	75	75, 74, 213, 120, 91, 63
Dicrotophos	23.82	127	127, 67, 72, 109, 193, 237
Benzidine	23.87	184	92, 185
Trifluralin	23.88	306	306, 43, 264, 41, 290
Bromoxynil	23.90	277	277, 279, 88, 275, 168
Pyrene	24.02	202	200, 203
Monocrothophos	24.08	127	127, 192, 67, 97, 109
Phorate	24.10	75	75, 121, 97, 93, 260
Sulfallate	24.23	188	188, 88, 72, 60, 44
Demeton-s	24.30	88	88, 60, 81, 89, 114, 115
Phenacetin	24.33	108	180, 179, 109, 137, 80
Dimethoate	24.70	87	87, 93, 125, 143, 229
Phenobarbital	24.70	204	204, 117, 232, 146, 161
Carbofuran	24.90	164	164, 149, 131, 122
Octamethyl pyrophosphoramide	24.95	135	135, 44, 199, 286, 153, 243
4-Aminobiphenyl	25.08	169	169, 168, 170, 115
Terbufos	25.35	231	231, 57, 97, 153, 103

TABLE VIII. (cont)

Compound	Retention time (min)	Primary ion	Secondary ion (s)
Pronamide	25.48	173	173, 175, 145, 109, 147
Aminoazobenzene	25.72	197	92, 197, 120, 65, 77
Dichlone	25.77	191	191, 163, 226, 228, 135, 193
Dinoseb	25.83	211	211, 163, 147, 117, 240
Disulfoton	25.83	88	88, 97, 89, 142, 186
Fluchloralin	25.88	306	306, 63, 326, 328, 264, 65
Mexacarbate	26.02	165	165, 150, 134, 164, 222
4.4'-Oxydianiline	26.08	200	200, 108, 171, 80, 65
Butyl benzyl phthalate	26.43	149	91, 206
4-Nitrobiphenyl	26.55	199	199, 152, 141, 169, 151
Phosphamidon	26.85	127	127, 264, 72, 109, 138
2-Cyclohexyl-4,6-dinitrophenol	26.87	231	231, 185, 41, 193, 266
Methyl parathion	27.03	109	109, 125, 263, 79, 93
Carbaryl	27.17	144	144, 115, 116, 201
Dimethylaminoazobenzene	27.50	225	225, 120, 77, 105, 148, 42
Propylthiouracil	27.68	170	170, 142, 114, 83
Benz(a)anthracene	27.83	228	229, 226
Chrysene-d_{12} (I.S.)	27.88	240	120, 236
3,3'-Dichlorobenzidine	27.88	252	254, 126
Chrysene	27.97	228	226, 229
Malathion	28.08	173	173, 125, 127, 93, 158
Kepone	28.18	272	272, 274, 237, 178, 143, 270
Fenthion	28.37	278	278, 125, 109, 169, 153
Parathion	28.40	109	109, 97, 291, 139, 155
Anilazine	28.47	239	239, 241, 143, 178, 89

TABLE VIII. (cont)

Compound	Retention time (min)	Primary ion	Secondary ion (s)
Bis(2-ethylhexyl) phthalate	28.47	149	167, 279
3,3'-Dimethylbenzidine	28.55	212	212, 106, 196, 180
Carbophenothion	28.58	157	157, 97, 121, 342, 159, 199
5-Nitroacenaphthene	28.73	199	199, 152, 169, 141, 115
Methapyrilene	28.77	97	97, 50, 191, 71
Isodrin	28.95	193	193, 66, 195, 263, 265, 147
Captan	29.47	79	79, 149, 77, 119, 117
Chlorfenvinphos	29.53	267	267, 269, 323, 325 295
Crotoxyphos	29.73	127	127, 105, 193, 166
Phosmet	30.03	160	160, 77, 93, 317, 76
EPN	30.11	157	157, 169, 185, 141, 323
Tetrachlorvinphos	30.27	329	109, 329, 331, 79, 333
Di-n-octyl phthalate	30.48	149	167, 43
2-Aminoanthraquinone	30.63	223	223, 167, 195
Barban	30.83	222	222, 51, 87, 224, 257, 153
Aramite	30.92	185	185, 191, 319, 334, 197, 321
Benzo(b)fluoranthene	31.45	252	253, 125
Nitrofen	31.48	283	283, 285, 202, 139, 253
Benzo(k)fluoranthene	31.55	252	253, 125
Chlorobenzilate	31.77	251	251, 139, 253, 111, 141
Fensulfothion	31.87	293	293, 97, 308, 125, 292
Ethion	32.08	231	231, 97, 153, 125, 121
Diethylstilbestrol	32.15	268	268, 145, 107, 239, 121, 159
Famphur	32.67	218	218, 125, 93, 109, 217
Tri-p-tolyl phosphate[b]	32.75	368	368, 367, 107, 165, 198
Benzo(a)pyrene	32.80	252	253, 125
Perylene-d_{12} (I.S.)	33.05	264	260, 265

TABLE VIII. (cont)

Compound	Retention time (min)	Primary ion	Secondary ion (s)
7,12-Dimethylbenz(a)anthracene	33.25	256	256, 241, 239, 120
5,5-Diphenylhydantoin	33.40	180	180, 104, 252, 223, 209
Captafol	33.47	79	79, 77, 80, 107
Dinocap	33.47	69	69, 41, 39
Methoxychlor	33.55	227	227, 228, 152, 114, 274, 212
2-Acetylaminofluorene	33.58	181	181, 180, 223, 152
4,4'-Methylenebis-(2-chloroaniline)	34.38	231	231, 266, 268, 140, 195
3,3'-Dimethoxybenzidine	34.47	244	244, 201, 229
3-Methylcholanthrene	35.07	268	268, 252, 253, 126, 134, 113
Phosalone	35.23	182	182, 184, 367, 121, 379
Azinphos-methyl	35.25	160	160, 132, 93, 104, 105
Leptophos	35.28	171	171, 377, 375, 77, 155, 379
Mirex	35.43	272	272, 237, 274, 270 239, 235
Tris(2,3-dibromopropyl) phosphate	35.68	201	137, 201, 119, 217, 219, 199
Dibenz(a,j)acridine	36.40	279	279, 280, 277, 250
Mestranol	36.48	277	277, 310, 174, 147, 242
Coumaphos	37.08	362	362, 226, 210, 364, 97, 109
Indeno(1,2,3-cd)pyrene	39.52	276	138, 227
Dibenz(a,h)anthracene	39.82	278	139, 279
Benzo(g,h,i)perylene	41.43	276	138,277
1,2:4,5-Dibenzopyrene	41.60	302	302, 151, 150, 300
Strychnine	45.15	334	334, 335, 333
Piperonyl sulfoxide	46.43	162	162, 135, 105, 77
Hexachlorophene	47.98	196	196, 198, 209, 211, 406, 408

TABLE VIII. (cont)

Compound	Retention time (min)	Primary ion	Secondary ion (s)
Aldrin		66	263, 220
Aroclor-1016		222	260, 292
Aroclor-1221		190	224, 260
Aroclor-1232		190	224, 260
Aroclor-1242		222	256, 292
Aroclor-1248		292	362, 326
Aroclor-1254		292	362, 326
Aroclor-1260		360	362, 394
α-BHC		183	181, 109
β-BHC		181	183, 109
4,4'-DDD		235	237, 165
4,4'-DDE		246	248, 176
4,4'-DDT		235	237,165
Dieldrin		79	263, 279
1,2-Diphenylhydrazine		77	105, 182
Endosulfan I		195	339, 341
Endosulfan II		337	339, 341
Endosulfan sulfate		272	387, 422
Endrin		263	82, 81
Endrin aldehyde		67	345, 250
Endrin ketone		317	67, 319
2-Fluorobiphenyl (surr.)		172	171
2-Fluorophenol (surr.)		112	64
Heptachlor		100	272, 274
Heptachlor epoxide		353	355, 351

TABLE VIII. (cont)

Compound	Retention time (min)	Primary ion	Secondary ion (s)
Nitrobenzene-d_5 (surr.)		82	128, 54
N-Nitrosodimethylamine		42	74, 44
Phenol-d_6 (surr.)		99	42, 71
Terphenyl-d_{14} (surr.)		244	122, 212
2,4,6-Tribromophenol (surr.)		330	332, 141
Toxaphene		159	231, 233

I.S. = internal standard.
surr. = surrogate.
[a]Estimated retention times; this value depends substantially on the final chromatographic conditions.
[b]Substitute for the non-specific mixture, tricresyl phosphate.

TABLE IX. LIMIT OF QUANTITATION FOR HAZARDOUS SUBSTANCE LIST OF SEMIVOLATILE ORGANIC ANALYTES IN SOIL

Compound	CAS Number	LOQ mg/Kg
Acenaphthene	83-32-9	1.0
Acenaphthylene	208-96-2	1.0
Anthracene	120-12-7	1.0
Aniline	62-53-3	1.0 *
Azobenzene	103-33-3	1.0
Benzidine	92-87-5	1.0*,a
Benz(a)anthracene	56-55-3	1.0
Benzo(b)fluoranthene	205-99-2	1.0
Benzo(k)fluoranthene	207-88-9	1.0
Benzoic Acid	65-85-0	1.0 *,c
Benzo(g,h,i)perylene	191-24-2	1.0
Benzo(a)pyrene	50-32-8	1.0
Benzyl alcohol	100-51-6	1.0
Bis(2-chloroethoxy)methane	111-91-1	1.0
Bis(2-chloroethyl)ether	111-44-4	1.0
Bis(2-chloroisopropyl)ether	108-60-1	1.0
4-Bromophenyl phenyl ether	101-55-3	1.0
Butylbenzyl phthalate	85-68-7	1.0 *
4-Chloroaniline	106-47-8	1.0 *,c
4-Chloro-3-methylphenol	59-50-7	1.0
2-Chloroanaphthalene	91-58-7	1.0
2-Chlorophenol	95-57-8	1.0
4-Chlorophenyl phenyl ether	7005-72-3	1.0
Chrysene	218-01-9	1.0
Dibenz(a,h)anthracene	53-70-3	1.0
Dibenzofuran	132-64-9	1.0

TABLE IX. (cont)

Compound	CAS Number	LOQ mg/Kg
Di-n-butylphthalate	84-74-2	1.0 *
1,2-Dichlorobenzene	95-50-1	1.0
1,3-Dichlorobenzene	541-73-1	1.0
1,4-Dichlorobenzene	106-46-7	1.0
3,3'-Dichlorobenzidine	91-94-1	1.0 *
2,4-Dichlorophenol	120-83-2	1.0
Diethylphthalate	84-66-2	1.0 *
2,4-Dimethylphenol	105-67-9	1.0 *,c
Dimethylphthalate	131-11-3	1.0 *
4,6-Dinitro-2-methylphenol	534-52-1	1.0
2,4-Dinitrophenol	51-28-5	1.0 *,c
2,4-Dinitrotoluene	121-14-2	1.0
2,6-Dinitrotoluene	606-20-2	1.0
Di-n-octyl phthalate	117-84-0	1.0
Bis(2-ehtylhexyl)phthalate	117-81-7	1.0
Fluoranthene	206-44-0	1.0
Fluorene	86-73-7	1.0
Hexachlorobenzene	118-74-1	1.0
Hexachlorobutadiene	87-68-3	1.0
Hexachlorocyclopentadiene	77-47-4	1.0*,d
Hexachloroethane	67-72-1	1.0
Indeno(1,2,3-cd)pyrene	193-39-5	1.0
Isophorone	78-59-1	1.0
2-Methylnaphthalene	91-57-6	1.0
2-Methylphenol	95-48-7	1.0 *,c
4-Methylphenol	6-44-5	1.0 *,c
Naphthalene	91-20-3	1.0
2-Nitroaniline	88-74-4	1.0

TABLE IX. (cont)

Compound	CAS Number	LOQ mg/Kg
3-Nitroaniline	99-09-2	1.0 *,c
4-Nitroaniline	100-01-6	1.0 *,c
Nitrobenzene	98-95-3	1.0
2-Nitrophenol	88-75-5	1.0
4-Nitrophenol	100-02-7	1.0 *,c
N-nitrosodimethylamine	62-75-9	1.0 *,c
N-nitrosodiphenylamine	86-30-6	1.0
N-Nitroso-di-n-propylamine	621-64-7	1.0 *
Pentachlorophenol	87-86-5	1.0 *,c
Phenanthrene	85-01-8	1.0
Phenol	108-95-2	1.0
Pyrene	129-00-0	1.0
1,2,4-Trichlorobenzene	120-82-1	1.0
2,4,5-Trichlorophenol	95-95-4	1.0
2,4,6-Trichlorophenol	88-06-2	1.0

* The limit of quantitation has not been verified for these analytes based upon a Method Detection Limit study. All other analytes averaged better than 70% recovery based upon seven repetitions. The amount of each analyte spiked was 1.0 μg into 1.0 L.

a Exhibits nonreproducible chromatography and oxidative loss during concentration.

c These analytes are subject to erratic chromatographic performance and/or thermal decomposition in the gas chromatograph inlet.

d Subject to thermal decomposition in the chromatographic inlet, chemical reaction with acetone in solution, and photochemical decomposition.

Limits of Quantitation (LOQ) will be two times greater for soil/sediment matrices which have been GPC cleaned.

TABLE X. APPENDIX IX TARGET COMPOUND LIST OF SEMIVOLATILE ORGANIC ANALYTES IN SOIL LIMIT OF QUANTITATION

Compound	CAS number	LOQ µg/Kg
Acenaphthene	83-32-9	1.0
Acenaphthylene	208-96-2	1.0
Acetophenone	98-86-2	ND
Anthracene	120-12-7	1.0
Aniline	62-53-3	1.0 *
Aramite	140-57-8	ND
Azobenzene	3-33-3	1.0
Benzidine	92-87-5	1.0 *,a
Benz(a)anthracene	56-55-3	1.0
Benzo(b)fluoranthene	205-99-2	1.0
Benzo(k)fluoranthene	207-88-9	1.0
Benzoic acid	65-85-0	1.0 *,c
Benzo(g,h,i)perylene	191-24-2	1.0
Benzo(a)pyrene	50-32-8	1.0
Benzyl alcohol	0-51-6	1.0
Bis(2-chloroethoxy)methane	111-91-1	1.0
Bis(2-chloroethyl) ether	111-44-4	1.0
Bis(2-chloroisopropyl) ether	108-60-1	1.0
4-Bromophenyl phenyl ether	101-55-3	1.0
Butyl benzyl phthalate	85-68-7	1.0 *
4-Chloroaniline	106-47-8	1.0 *,c
Chlorobenzilate	510-15-6	ND
4-Chloro-3-methylphenol	59-50-7	1.0

TABLE X. (cont)

Compound	CAS number	LOQ µg/Kg
2-Chloroanaphthalene	91-58-7	1.0
2-Chlorophenol	95-57-8	1.0
4-Chlorophenyl phenyl ether	7005-72-3	1.0
Chrysene	218-01-9	1.0
Diallate	2303-16-4	ND
Dibenz(a,h)anthracene	53-70-3	1.0
Dibenzofuran	132-64-9	1.0
Di-n-butyl phthalate	84-74-2	1.0 *
1,2-Dichlorobenzene	95-50-1	1.0
1,3-Dichlorobenzene	541-73-1	1.0
1,4-Dichorobenzene	6-46-7	1.0
3,3'-Dichlorobenzidine	91-94-1	1.0 *
2,4-Dichlorophenol	120-83-2	1.0
Diethyl phthalate	84-66-2	1.0 *
Dimethoate	60-51-5	ND
7,12-Dimethylbenz(a)-anthracene	57-97-6	ND
2,4-Dimethylphenol	5-67-9	1.0 *,c
Dimethyl phthalate	131-11-3	1.0 *
4,6-Dinitro-2-methylphenol	534-52-1	1.0
2,4-Dinitrophenol	51-28-5	1.0 *,c
2,4-Dinitrotoluene	121-14-2	1.0
2,6-Dinitrotoluene	606-20-2	1.0
Di-n-octyl phthalate	117-84-0	1.0
Diphenylamine	122-39-4	ND
Dinoseb (DNBP)	88-85-7	ND

TABLE X. (cont)

Compound	CAS number	LOQ µg/Kg
Disulfoton	298-04-4	ND
Bis(2-ethylhexyl) phthalate	117-81-7	1.0
Ethyl methacrylate	97-63-2	ND
Ethyl methanesulfonate	62-50-0	ND
Famphur	52-85-7	ND
Fluoranthene	206-44-0	1.0
Fluorene	86-73-7	1.0
Hexachlorobenzene	118-74-1	1.0
Hexachlorobutadiene	87-68-3	1.0
Hexachlorocyclopentadiene	77-47-4	1.0*,d
Hexachloroethane	67-72-1	1.0
Hexachlorophene	70-30-4	ND
Hexachloropropene	1888-71-7	ND
Indeno(1,2,3-cd)pyrene	193-39-5	1.0
Isodrin	465-73-6	ND
Isosafrole	120-58-1	ND
Isophorone	78-59-1	1.0
Kepone	143-50-0	ND
3-Methylcholanthrene	56-49-5	ND
2-Methylnaphthalene	91-57-6	1.0
2-Methylphenol	95-48-7	1.0 *,c
4-Methylphenol	106-44-5	1.0 *,c
Methapyrilene hydrochloride	91-80-5	ND
Methyl methacrylate	80-62-6	ND
Methyl methanesulfonate	66-27-3	ND
Methyl Parathion	296-00-0	ND
Naphthalene	91-20-3	1.0
2-Nitroaniline	88-74-4	1.0

TABLE X. (cont)

Compound	CAS number	LOQ µg/kg
3-Nitroaniline	99-09-2	1.0 *,c
4-Nitroaniline	0-01-6	1.0 *,c
Nitrobenzene	98-95-3	1.0
2-Nitrophenol	88-75-5	1.0
4-Nitrophenol	100-02-7	1.0 *,c
4-Nitroquinoline-1-oxide	56-57-5	ND
5-Nitro-2-methylaniline	99-55-8	ND
N-Nitrosodiethylamine	55-18-5	ND
N-Nitrosomethylethylamine	10595-95-6	ND
N-Nitroso-di-n-butylamine	924-16-3	ND
N-Nitrosodimethylamine	62-75-9	1.0 *,c
N-Nitrosodiphenylamine	86-30-6	1.0
N-Nitroso-di-n-propylamine	621-64-7	1.0 *
o-Toluidine	95-53-4	ND
Parathion	56-38-2	ND
Pentachloroethane	76-01-7	ND
Pentachloronitrobenzene	82-68-8	ND
Pentachlorophenol	87-86-5	1.0 *,c
Phenacetin	62-44-2	ND
Phenanthrene	85-01-8	1.0
Phenol	8-95-2	1.0
Phorate	298-02-2	ND
2-Picoline	109-06-8	ND
Pronamide	23950-58-5	ND
Pyridine	110-86-1	ND
Pyrene	129-00-0	1.0

TABLE X. (cont)

Compound	CAS number	LOQ µg/Kg
Safrole	94-59-7	ND
2,3,4,6-Tetrachlorophenol	58-90-2	ND
1,2,4-Trichlorobenzene	120-82-1	1.0
2,4,5-Trichlorophenol	95-95-4	1.0
O,O,O-Triethyl phosphorate	126-68-1	ND
2,4,6-Trichlorophenol	88-06-2	1.0
sym-Trinitrobenzene	99-35-4	ND
Tetraethyl dithiophosphate	3689-24-5	ND

* = The limit of quantitation has not been verified for these analytes based upon a Method Detection Limit study. All others averaged better than 70% analyte recovery based upon seven repetitions. The amount of each analyte spiked was 1.0 µg into 1.0 L.

a = Exhibits nonreproducible chromatography and oxidative loss during concentration.

c = These analytes are subject to erratic chromatographic performance and/or thermal decomposition in the gas chromatograph inlet.

d = Subject to thermal decomposition in the chromatographic inlet, chemical reaction with acetone in solution, and photochemical decomposition.

ND = not determined for these analytes.

Limits of Quantitation (LOQ) will be two times greater for soil/sediment matrices which have been GPC cleaned.

EXTRACTION OF SEMIVOLATILE ORGANIC ANALYTES IN SOLID MATRICES BY GC/MS MOBILE LABORATORY METHOD

Analytes: Base Neutral/Acid Extractables (BNAs)	**Method No.:** MLO510
Matrix: Soil, sediment, and sludges	**Minimum Detection Limit:** 1.0 - 2.0 μg/mg nominal (matrix-dependent)
Procedure: Extraction of analytes in the field using appropriate solvents and rotary table agitation. Analysis is by a field screening GC/MS method.	**Accuracy and Precision:** These parameters are analyte-dependent and are greatly influenced by the matrix.
Effective Date: 04/03/93	**Authors:** Martin W. Koby Matthew Monagle

SAFETY NOTE: Before beginning this procedure, read all of the Material Safety Data Sheets for the chemicals listed in Sec. 5. Read Sec. 4.3 of the EM-9 Safety Manual for information on personal protective clothing and equipment. Read Sec. 13 of this procedure and Source Material 14.4 for proper waste disposal practices.

1. Principle of Method

1.1. Depending on the analysis required, semivolatile constituents are extracted from various solid matrices using a rotary action shaker table. Extracts are then concentrated to a small volume (typically 0.5 mL or less) and analyzed by gas chromatography/mass spectrometry.

Analytes from a wide variety of compound classes can be determined using this method. Table IV lists the compounds in the current Hazardous Substance List which are analyzed routinely. Table V contains the Appendix IX list of compounds that are not routinely analyzed. (Tables IV and V are found at the end of this procedure.)

2. Sensitivity

2.1. Practical limits of quantitation are generally in the range of 1.0 mg/kg to 2.0 mg/kg for low-level solid matrices. Matrices which are relatively free of interferences have lower attainable limits of detection than those having large amounts of coextractable material, such as drum waste. Medium-level extracts have a nominal detection limit of 20,000 μg/kg.

2.2. Factors affecting sensitivity include the response factor of the compound being measured, the final volume of extract, the sample aliquot extracted, and the level of coextracted material.

3. Accuracy and Precision

3.1. Based upon fixed-based laboratory surrogate and spike data, analyte recoveries are typically in the 60-110% range. Recoveries can be expected to vary depending on the given analyte and matrix complexity.

3.2. Long-range precision data is currently based upon fixed-base laboratory matrix spike and spike duplicate percent recovery and the relative percent difference between the two. Refer to Section 11, Table III.

4. Interferences

4.1. Any material which will cause an increase in background signal or elevated baseline or result in discrete chromatographic peaks which are not attributable to target compounds may interfere with the identification and quantitation of a given analyte. Examples are environmental matrices containing high concentrations of humic material, oils, hydrocarbons, lipids, sulfur, or polar materials such as alcohols and carboxylic acids.

4.2. Excessive particulate matter in water, extreme alkalinity or acidity, reactive material, intense light, and high temperature can negatively effect analyte recovery.

5. Sample Collection and Storage

5.1. All sampling equipment should be free of introduced contaminants.

5.2. Soil or sediment samples are typically collected in amber or clear glass wide-mouth bottles. Caps should have Teflon liners; however, aluminum foil can be substituted for Teflon if necessary. Excessive headspace should be avoided.

5.3. Samples should be stored, unpreserved, in a refrigerator at 4°C until extraction is initiated.

6. Sample holding times

6.1. Soil or sediment samples must be extracted within 14 d of receipt.

6.2. Sample extracts must be analyzed within 40 d of extraction.

7. Apparatus

7.1. Electronic balance: capable of measurement to three decimal places.

7.2. Nitrogen evaporation apparatus with multiple sample capacity: Organomation N-EVAP, Model 111 or equivalent.

7.3. Beakers: glass, 100-, 150-, 250-, 400-, and 600-mL capacity.

7.4. Glass vials: 1.8-mL crimp cap, 1.8-, 7-, 10-, 12-, 15-, and 40-mL capacity screw cap with septa.

7.5. Volumetric flasks: 1-, 2-, 5-, 10-, 25-, 50-, 100-, and 250-mL with stoppers.

7.6. Disposable glass pipettes: 1-, 2-, 5-, and 10-mL.

7.7. Adjustable low-volume pipettors: 10- and 250-μL capacity with disposable capillary tips. SMI brand or equivalent.

7.8. Syringes: glass, gas-tight, 10-, 25-, 50-, and 100-μL volume.

7.9. Aluminum foil.

8. Reagents

8.1. Methylene chloride (Baker Resi-analyzed).

8.2. Acetone (Baker Resi-analyzed).

8.3. Methanol (HPLC-grade).

8.4. Hexane (pesticide-grade).

8.5. Reagent water (deionized). Charcoal filtered and/or distilled water demonstrated to be free from interferences.

8.6. Sodium sulfate (granular). Muffle overnight at 400°C. Alternatively, it can be Soxhlet-extracted with methylene chloride before use. Store in a covered container.

9. Analytical Standards

9.1. All analytical standards are refrigerated at -20°C. Working standards typically have a shelf life of three months. Stock standards are considered usable for at least six months or until degradation becomes apparent.

The following analytical standards are specified by EPA protocol to be used in the analysis of base/neutral acid extractables. They are readily available from any number of chemical suppliers as neat standards or as stock solutions. Currently, we use standard mixes formulated by Ultra Scientific, Inc.

9.2. **Surrogate compounds.** The surrogates closely resemble target compounds chemically but are not normally encountered in nature. Before extraction, each sample is fortified with a known concentration of surrogate mix. Evaluating surrogate recoveries give a measure of the method's efficiency for any given matrix.

9.2.1. Base/Neutral Surrogate Standard Mix (1000 μg/mL in CH_2Cl_2). This formulation contains the following compounds:

Nitrobenzene-d_5
2-Fluorobiphenyl
Terphenyl-d_{14}

9.2.2. Acid Surrogate Standard Mix (2000 μg/mL in methanol). This formulation contains the following compounds:

2-Fluorophenol
Phenol-d_5
2,4,6-Tribromophenol

9.2.3. BNA surrogate working standards are prepared by diluting each mix 1:20 with methanol in the same volumetric flask. This results in a final concentration of 50 or 100 ppm of base neutral/acid components, respectively.

9.3. **Matrix spike compounds.** These compounds (see Table I) are used to document analytical precision and accuracy, the objective being to identify both long-term and short-term trends in method performance. Known concentrations of spike material are added, to duplicate representative samples before extraction. Under Tier Three QC requirements, matrix spike and matrix spike duplicate data are generated once for every 20 samples analyzed.

TABLE I. BNA MATRIX SPIKE COMPOUNDS

Compound	Fraction	Amount added (μg)
1,2,4-Trichlorobenzene	BN	50
Acenaphthene	BN	50
2,4-Dinitrotoluene	BN	50
Pyrene	BN	50
N-nitroso-Di-n-propylamine	BN	50
1,4-Dichlorobenzene	BN	50
Pentachlorophenol	Acid	100

TABLE I. BNA MATRIX SPIKE COMPOUNDS (cont)		
Compound	Fraction	Amount added (μg)
Phenol	Acid	100
2-Chlorophenol	Acid	100
4-Chloro-3-methylphenol	Acid	100
4-Nitrophenol	Acid	100

9.3.1. Base/neutral matrix spike solution (1000 μg/mL in CH_2Cl_2). This formulation contains the following components:

Acenaphthene
1,4-Dichlorobenzene
2,4-Dinitrophenol
N-Nitroso-di-n-propylamine
Pyrene
1,2,4-Trichlorobenzene

9.3.2. Acid matrix spike solution (2000 μg/mL in methanol). This formulation contains the following components:

4-Chloro-3-methylphenol
2-Chlorophenol
4-Nitrophenol
Pentachlorophenol
Phenol

9.3.3. Working standards of matrix spiking solutions are made by diluting each stock 1:20 with methanol in the same volumetric flask. Final concentrations are 50/100 ppm base neutral/acid respectively.

10. Sample Extraction

10.1. Extracting low-level BNAs from soils, sediments, and other solid matrices using the rotary action table shaker.

10.1.1. Rinse all glassware with methylene chloride and air dry before use.

10.1.2. If any standing water is present in the sample container, decant it before homogenizing the sample. If the quantity of water is sufficient it may be treated as a separate sample, depending on the needs of the customer.

10.1.3. Avoiding rocks >2-mm-diam, grass, twigs, and other interfering material, weigh 10.0 g of homogenized sample into a 40-mL VOA vial. Record the sample weight in the benchsheet. Add about 10.0 g of granular sodium sulfate and mix thoroughly with a stainless-steel spatula. If the sample has significant moisture, additional Na_2SO_4 should be added. The sample should flow readily and have a grainy texture when sufficient sodium sulfate has been added.

10.1.4. If the sample has an oily appearance or strong organic/petroleum odor, extract a reduced aliquot. This will result in higher reported limits of quantitation.

10.1.5. If the analyte concentrations are to be reported on a dry-weight basis, determine the percent moisture. Tare an aluminum weigh boat or pan, add approximately 10 g of moist soil, and dry overnight at 105°C. Reweigh the samples and calculate the percent moisture from the weight loss on drying.

10.1.6. Add 1.0 mL of BNA surrogate standard mix directly to the surface of all samples, blanks, and matrix spikes. Similarly add 1.0 mL of BNA spike mix to the matrix spike and matrix spike duplicate samples.

10.1.7. Add exactly 10 mL of CH_2Cl_2 to the sample. Cap the vial and secure it to the sample shaker. Shake the vial vigorously for 30 min to thoroughly mix the sample and the solvent.

10.1.8. Pipette exactly 5 mL of the extract into an volumetric flask. Direct a gentle stream of dry nitrogen over the surface of the solvent. Periodically rinse the inside walls of the receiver tube with methylene chloride to prevent loss of analyte. Allow the extract to dry to an apparent volume of 0.5 mL, then remove from the bath. Occasionally an extract will not evaporate below 5.0 mL. In these instances the extract should be maintained at 5.0 mL and analyzed by GC/MS.

If the sample is to be analyzed for PCBs, pesticides, and semivolatile constituents, another 1-mL aliquot should be placed into a volumetric flask for solvent exchange. This extract is solvent-exchanged to hexane or iso-octane and analyzed for organochlorine pesticides and PCBs by GC/ECD.

11. Quality Assurance and Data Interpretation Requirements

11.1. The Quality Control (QC) requirements are defined in a tiered structure as follows:

Tier 1: 1-point calibration every day.
1 method blank every day.

Tier 2: 3-point initial calibration, daily check standard.
BFB tune check every day.
1 method blank every day.

Tier 3: 5-point initial calibration, daily check standard.
BFB tune check every day.
1 method blank per analytical batch.
Blind QC samples at a rate of no more than 10%.
Matrix spike and matrix spike duplicate for each analytical batch.
12-h clock for tune check and daily check standard.

11.2. A method blank is a volume of reagent water or a purified solid material which is taken through the entire analytical scheme. The weight or volume of the blank must approximate that of the samples being analyzed.

11.3. Under Tier 2 and Tier 3 QC requirements, blanks are analyzed at a frequency of one for every 20 samples of similar matrix, or whenever samples are extracted by the same procedure, whichever is more frequent. The following criteria are checked immediately after blank analysis:

- The method blank should contain less than five times the practical quantitation limit (PQL) of phthalate esters in the target compound list.
- All other analytes on the target compound list should not be present at concentrations greater than the PQL.
- Recovery of all surrogate compounds must be within specified limits (see Table II). If this criterion is not met, reanalyze or reextract another blank to determine whether the incident is isolated or an out-of-control status exists.

TABLE II. BNA SURROGATE SPIKE RECOVERY LIMITS IN PERCENT		
Surrogate Compound	Water	Soil
Nitrobenzene-d_5	35-114	23-120
2-Fluorobiphenyl	43-116	30-115
Terphenyl-d_{14}	33-141	18-137
Phenol-d_5	10-94	24-113
2-Fluorophenol	21-100	25-121
2,4,6-Tribromophenol	10-123	19-122

11.4. **Surrogate spike requirements.** Each sample which is prepared and analyzed for semivolatile compounds is fortified with known amounts of base-neutral and acid extractable compounds. Evaluating their recovery, measured as a percentage, allows conclusions to be derived concerning the analytical efficiency on a sample-by-sample basis.

11.4.1. Surrogate spike recoveries are considered to be acceptable if they fall within the ranges specified in Table II.

The following conditions indicate unacceptable surrogate recovery:

- Recovery of any one surrogate in either the base-neutral or acid fraction is less than 10%.

- Recoveries of any two surrogate compounds in either base-neutral or acid fraction are out of recovery limits.

11.4.2. When surrogate spike recoveries are determined to be out of control, the analyst needs to determine if the cause is matrix- or process-dependent. Re-extraction should be requested when there is sufficient sample and holding times can be met. Whichever conclusion is reached needs to be addressed in the case narrative and/or anomaly summary. Corrective action will be implemented to alleviate the causes of the out-of-control condition.

11.5. Matrix spike and matrix spike duplicate recovery requirements. In order to evaluate the matrix effect of a sample on the analytical methodology employed, known concentrations of base/neutral and acid target compounds are added to duplicates of a given sample. See Table III for a list of spike compounds. The sample chosen to be spiked should be representative of the samples from a given project.

11.5.1. Under Tier Three QC requirements, matrix spike and matrix spike duplicate data are generated for every 20 samples of a given matrix type prepared by the same method.

11.5.2. Matrix spike/matrix spike duplicates and the original unspiked sample must be concentrated to the same final volume and analyzed at the same dilution level. If high levels of target compounds are detected that are not matrix spike compounds, the original sample only needs to be diluted to enable compound quantitation.

11.5.3. Spike recovery is evaluated in terms of percent recovery and the relative percent difference (RPD) between individual spike compounds in the MS and MSD. This data can be used to evaluate the long-term precision and accuracy of the method. See Table III for spike recovery limits.

TABLE III. BNA MATRIX SPIKE RECOVERY LIMITS - SOIL

Compound	Percent recovered			RPD
1,24-Trichlorobenzene	38	-	107	23
Acenaphthene	31	-	137	19
2,4-Dinitrotoluene	28	-	89	47
Pyrene	35	-	142	36
N-nitroso-Di-n-propylamine	41	-	126	38
1,4-Dichlorobenzene	28	-	104	27
Pentachlorophenol	17	-	109	47
Phenol	26	-	90	35
2-Chlorophenol	25	-	102	50
4-Chloro-3-methylphenol	26	-	103	33
4-Nitrophenol	11	-	114	50

11.6. Under Tier Three QC requirements, blind spikes are extracted and analyzed on a regular basis as an independent check of method accuracy. Standard reference materials resemble submitted matrices as closely as possible.

11.7. Percent moisture determination. When sample concentrations are to be reported on a dry weight basis, percent moisture is calculated using the following equation:

$$\% M = \frac{Sw - Sd}{Sw} \times 100 ,$$

where SW = wet weight of the soil aliquot less the container weight, and
Sd = dry weight of the soil aliquot after oven drying at 105°C for 24 h less the container weight.

12. Reporting

Extraction data are recorded in a bound extraction benchsheet notebook. Nonroutine amendments to the procedure are also documented in this notebook in the amendments section at the back of the notebook.

13. Proper Waste Disposal Practices

13.1. General waste management.

13.1.1. Each analyst within the section shall be given Waste Generator Training from EM-8 within 90 days of the date of hire.

13.1.2. Wherever possible, minimize the generation of waste through reduction, reuse, or recycling. Wherever possible, segregate containers to reflect the nature of the hazardous waste and the eventual waste disposal methods. For example, chlorinated solvent wastes should be segregated from flammable, nonchlorinated solvents and >50-ppm PCB-contaminated waste should be segregated from <50-ppm PCB-contaminated waste. This is especially important in analysis areas where the waste generated is considered to be mixed waste.

13.1.3. Categorize the waste using an EM-8 Waste Profile Form.

13.1.4. Upon completion of the Waste Profile Form, dispose of the waste by completing a Waste Disposal Request Form from EM-7. Approximately 30 days is required for the disposal of waste after the completion of the listed forms.

13.2. Solid waste.

13.2.1. Accumulate hazardous wastes such as contaminated paper towels, pipettes, spent syringes, and glass vials in a covered plastic container lined with a plastic bag. Label the container with a hazardous waste label which identifies the hazard, type of material being stored (i.e., pipettes, paper towels, etc.), the accumulation start date, and the laboratory of origin.

13.2.2. Open the waste container only for the time necessary to add the waste.

13.3. Liquid waste.

13.3.1. Accumulate liquid waste, such as spent samples and spent solvents that are not reusable, in glass or steel containers appropriate for the type of sample being stored. For example, store caustic materials in glass containers and spent solvents that are not bound for recycling in metal containers.

13.3.2. Place all containers storing hazardous liquid materials within secondary containment. Label the container with a hazardous waste label which identifies the hazard, type of material being stored (i.e., pipettes, paper towels, etc.), the accumulation start date, and the laboratory of origin.

13.3.3. Open the waste container only for the time necessary to add the waste.

13.4. Unused samples.

13.4.1. Return unused environmental samples to the Sample Management section for disposal.

14. Source Materials

14.1. USEPA Contract Laboratory Program, Statement of Work for Organic Analysis Multi-media, Multi-Concentration, 2/88.

14.2. Test Methods for Evaluating Solid Waste, Physical/Chemical Methods, SW-846, 3rd ed., 1988.

14.3. Sorbent Extraction Technology, K.C. Van Horne, Analytical International, Inc. 1985.

14.4. "Hazardous and Mixed Waste," Adminisrative Requirement 10-3, in *Environment, Safety, and Health Manual*, Chapter 1 of Los Alamos National Lboratory Manual (most recent editon).

TABLE IV. HAZARDOUS SUBSTANCE LIST OF SEMIVOLATILE ORGANIC ANALYTES LIMIT OF QUANTITATION

Compound	CAS number	LOQ mg/kg
Acenaphthene	83-32-9	1.0
Acenaphthylene	208-96-2	1.0
Anthracene	120-12-7	1.0
Aniline	62-53-3	1.0 *
Azobenzene	3-33-3	1.0
Benzidine	92-87-5	1.0 *,a
Benz(a)anthracene	56-55-3	1.0
Benzo(b)fluoranthene	205-99-2	1.0
Benzo(k)fluoranthene	207-88-9	1.0
Benzoic acid	65-85-0	1.0 *,c
Benzo(g,h,i)perylene	191-24-2	1.0
Benzo(a)pyrene	50-32-8	1.0
Benzyl alcohol	0-51-6	1.0
Bis(2-chloroethoxy)methane	111-91-1	1.0
Bis(2-chloroethyl) ether	111-44-4	1.0
Bis(2-chloroisopropyl) ether	8-60-1	1.0
4-Bromophenyl phenyl ether	1-55-3	1.0
Butyl benzyl phthalate	85-68-7	1.0 *
4-Chloroaniline	6-47-8	1.0 *,c
4-Chloro-3-methylphenol	59-50-7	1.0
2-Chloroanaphthalene	91-58-7	1.0
2-Chlorophenol	95-57-8	1.0
4-Chlorophenyl phenyl ether	7005-72-3	1.0
Chrysene	218-01-9	1.0
Dibenz(a,h)anthracene	53-70-3	1.0
Dibenzofuran	132-64-9	1.0

TABLE IV. (cont)

Compound	CAS number	LOQ mg/kg
Di-n-butylphthalate	84-74-2	1.0 *
1,2-Dichlorobenzene	95-50-1	1.0
1,3-Dichlorobenzene	541-73-1	1.0
1,4-Dichlorobenzene	6-46-7	1.0
3,3'-Dichlorobenzidine	91-94-1	1.0 *
2,4-Dichlorophenol	120-83-2	1.0
Diethyl phthalate	84-66-2	1.0 *
2,4-Dimethylphenol	5-67-9	1.0 *,c
Dimethyl phthalate	131-11-3	1.0 *
4,6-Dinitro-2-methylphenol	534-52-1	1.0
2,4-Dinitrophenol	51-28-5	1.0 *,c
2,4-Dinitrotoluene	121-14-2	1.0
2,6-Dinitrotoluene	606-20-2	1.0
Di-n-octyl phthalate	117-84-0	1.0
Bis(2-ethylhexyl) phthalate	117-81-7	1.0
Fluoranthene	206-44-0	1.0
Fluorene	86-73-7	1.0
Hexachlorobenzene	118-74-1	1.0
Hexachlorobutadiene	87-68-3	1.0
Hexachlorocyclopentadiene	77-47-4	1.0*,d
Hexachloroethane	67-72-1	1.0
Indeno(1,2,3-cd)pyrene	193-39-5	1.0
Isophorone	78-59-1	1.0
2-Methylnaphthalene	91-57-6	1.0
2-Methylphenol	95-48-7	1.0 *,c
4-Methylphenol	6-44-5	1.0 *,c
Naphthalene	91-20-3	1.0
2-Nitroaniline	88-74-4	1.0

TABLE IV. (cont)

Compound	CAS number	LOQ mg/kg
3-Nitroaniline	99-09-2	1.0 *,c
4-Nitroaniline	0-01-6	1.0 *,c
Nitrobenzene	98-95-3	1.0
2-Nitrophenol	88-75-5	1.0
4-Nitrophenol	0-02-7	1.0 *,c
N-nitrosodimethylamine	62-75-9	1.0 *,c
N-nitrosodiphenylamine	86-30-6	1.0
N-Nitroso-di-n-propylamine	621-64-7	1.0 *
Pentachlorophenol	87-86-5	1.0 *,c
Phenanthrene	85-01-8	1.0
Phenol	8-95-2	1.0
Pyrene	129-00-0	1.0
1,2,4-Trichlorobenzene	120-82-1	1.0
2,4,5-Trichlorophenol	95-95-4	1.0
2,4,6-Trichlorophenol	88-06-2	1.0

* = The limit of quantitation has not been verified for these analytes based upon a Method Detection Limit study. All others averaged better than 70% analyte recovery based upon seven repetitions. The amount of each analyte spiked was 330 µg into 1.0 L.

a = Exhibits nonreproducible chromatography and oxidative loss during concentration.

c = These analytes are subject to erratic chromatographic performance and/or thermal decomposition in the gas chromatograph inlet.

d = Subject to thermal decomposition in the chromatographic inlet, chemical reaction with acetone in solution, and photochemical decomposition.

Limits of quantitation (LOQ) will be two times greater for soil/sediment matrices which have been GPC cleaned.

TABLE V. APPENDIX IX TARGET COMPOUND LIST OF SEMIVOLATILE ORGANIC ANALYTES LIMIT OF QUANTITATION

Compound	CAS number	LOQ mg/kg
Acenaphthene	83-32-9	1.0
Acenaphthylene	208-96-2	1.0
Acetophenone	98-86-2	ND
Anthracene	120-12-7	1.0
Aniline	62-53-3	1.0 *
Aramite	140-57-8	ND
Azobenzene	3-33-3	1.0
Benzidine	92-87-5	1.0 *,a
Benz(a)anthracene	56-55-3	1.0
Benzo(b)fluoranthene	205-99-2	1.0
Benzo(k)fluoranthene	207-88-9	1.0
Benzoic acid	65-85-0	1.0 *,c
Benzo(g,h,i)perylene	191-24-2	1.0
Benzo(a)pyrene	50-32-8	1.0
Benzyl alcohol	0-51-6	1.0
Bis(2-chloroethoxy)methane	111-91-1	1.0
Bis(2-chloroethyl) ether	111-44-4	1.0
Bis(2-chloroisopropyl) ether	108-60-1	1.0
4-Bromophenyl phenyl ether	101-55-3	1.0
Butyl benzyl phthalate	85-68-7	1.0 *
4-Chloroaniline	106-47-8	1.0 *,c
Chlorobenzilate	510-15-6	ND
4-Chloro-3-methylphenol	59-50-7	1.0
2-Chloroanaphthalene	91-58-7	1.0
2-Chlorophenol	95-57-8	1.0
4-Chlorophenyl phenyl ether	7005-72-3	1.0

TABLE V. (cont)

Compound	CAS number	LOQ mg/kg
Chrysene	218-01-9	1.0
Diallate	2303-16-4	ND
Dibenz(a,h)anthracene	53-70-3	1.0
Dibenzofuran	132-64-9	1.0
Di-n-butyl phthalate	84-74-2	1.0 *
1,2-Dichlorobenzene	95-50-1	1.0
1,3-Dichlorobenzene	541-73-1	1.0
1,4-Dichorobenzene	6-46-7	1.0
3,3'-Dichlorobenzidine	91-94-1	1.0 *
2,4-Dichlorophenol	120-83-2	1.0
Diethyl phthalate	84-66-2	1.0 *
Dimethoate	60-51-5	ND
7,12-Dimethylbenz(a)-anthracene	57-97-6	ND
2,4-Dimethylphenol	5-67-9	1.0 *,c
Dimethyl phthalate	131-11-3	1.0 *
4,6-Dinitro-2-methylphenol	534-52-1	1.0
2,4-Dinitrophenol	51-28-5	1.0 *,c
2,4-Dinitrotoluene	121-14-2	1.0
2,6-Dinitrotoluene	606-20-2	1.0
Di-n-octyl phthalate	117-84-0	1.0
Diphenylamine	122-39-4	ND
Dinoseb (DNBP)	88-85-7	ND
Disulfoton	298-04-4	ND
Bis(2-ethylhexyl) phthalate	117-81-7	1.0
Ethyl methacrylate	97-63-2	ND
Ethyl methanesulfonate	62-50-0	ND
Famphur	52-85-7	ND

TABLE V. (cont)

Compound	CAS number	LOQ mg/kg
Fluoranthene	206-44-0	1.0
Fluorene	86-73-7	1.0
Hexachlorobenzene	118-74-1	1.0
Hexachlorobutadiene	87-68-3	1.0
Hexachlorocyclopentadiene	77-47-4	1.0*,d
Hexachloroethane	67-72-1	1.0
Hexachlorophene	70-30-4	ND
Hexachloropropene	1888-71-7	ND
Indeno(1,2,3-cd)pyrene	193-39-5	1.0
Isodrin	465-73-6	ND
Isosafrole	120-58-1	ND
Isophorone	78-59-1	1.0
Kepone	143-50-0	ND
3-Methylcholanthrene	56-49-5	ND
2-Methylnaphthalene	91-57-6	1.0
2-Methylphenol	95-48-7	1.0 *,c
4-Methylphenol	106-44-5	1.0 *,c
Methapyrilene hydrochloride	91-80-5	ND
Methyl methacrylate	80-62-6	ND
Methyl methanesulfonate	66-27-3	ND
Methyl Parathion	296-00-0	ND
Naphthalene	91-20-3	1.0
2-Nitroaniline	88-74-4	1.0
3-Nitroaniline	99-09-2	1.0 *,c
4-Nitroaniline	0-01-6	1.0 *,c
Nitrobenzene	98-95-3	1.0
2-Nitrophenol	88-75-5	1.0
4-Nitrophenol	100-02-7	1.0 *,c

TABLE V. (cont)

Compound	CAS number	LOQ mg/kg
4-Nitroquinoline-1-oxide	56-57-5	ND
5-Nitro-2-methylaniline	99-55-8	ND
N-Nitrosodiethylamine	55-18-5	ND
N-Nitrosomethylethylamine	10595-95-6	ND
N-Nitroso-di-n-butylamine	924-16-3	ND
N-nitrosodimethylamine	62-75-9	1.0 *,c
N-nitrosodiphenylamine	86-30-6	1.0
N-Nitroso-di-n-propylamine	621-64-7	1.0 *
o-Toluidine	95-53-4	ND
Parathion	56-38-2	ND
Pentachloroethane	76-01-7	ND
Pentachloronitrobenzene	82-68-8	ND
Pentachlorophenol	87-86-5	1.0 *,c
Phenacetin	62-44-2	ND
Phenanthrene	85-01-8	1.0
Phenol	8-95-2	1.0
Phorate	298-02-2	ND
2-Picoline	109-06-8	ND
Pronamide	23950-58-5	ND
Pyridine	110-86-1	ND
Pyrene	129-00-0	1.0
Safrole	94-59-7	ND
2,3,4,6-Tetrachlorophenol	58-90-2	ND
1,2,4-Trichlorobenzene	120-82-1	1.0
2,4,5-Trichlorophenol	95-95-4	1.0

TABLE V. (cont)

Compound	CAS number	LOQ mg/kg
O,O,O-Triethyl phosphorate	126-68-1	ND
2,4,6-Trichlorophenol	88-06-2	1.0
sym-Trinitrobenzene	99-35-4	ND
Tetraethyl dithiophosphate	3689-24-5	ND

* = The limit of quantitation has not been verified for these analytes based upon a Method Detection Limit study. All others averaged better than 70% analyte recovery based upon seven repetitions. The amount of each analyte spiked was 330 μg into 1.0 L.

a = Exhibits nonreproducible chromatography and oxidative loss during concentration.

c = These analytes are subject to erratic chromatographic performance and/or thermal decomposition in the gas chromatograph inlet.

d = Subject to thermal decomposition in the chromatographic inlet, chemical reaction with acetone in solution, and photochemical decomposition.

ND = not determined for these analytes.

Limits of quantitation (LOQ) will be two times greater for soil/sediment matrices which have been GPC cleaned.

VOLATILE ORGANIC COMPOUNDS IN SOIL AND SEDIMENT: CAPILLARY COLUMN TECHNIQUE—GC/MS MOBILE LABORATORY METHOD

Analyte: Volatile organic compounds	**Method No.:** MLO720
Matrix: Soil or sediment	**Procedure:** Purge/trap GC/MS, capillary column
Effective Date: 02/01/90	**Author:** Laura Kelly Matthew Monagle

SAFETY NOTE: Before beginning this procedure, read all the Material Safety Data Sheets for the chemicals listed in Sec. 6. Read Sec. 4.3. of the EM-9 Safety Manual for information on personal protective clothing and equipment. Read Sec. 11 of this procedure and Source Materials 12.3 and 12.4 for proper waste disposal practices.

1. Principle of Method

1.1. Volatile organic compounds are purged from the sample onto a sorbent material. These analytes are then desorbed into a gas chromatograph (GC). The column is temperature-programmed and analytes are separated and detected with a mass spectrometer (MS).

1.2. Qualitative identification is performed by analyzing standards under the same conditions used for samples and comparing resultant mass spectra and GC retention times. Each identified component is quantified by relating the MS response for an appropriately selected ion produced by that compound to the MS response for another ion produced by an internal standard.

2. Analytes and Limit of Quantitation

Internal Standards	Surrogates
Pentafluorobenzene	1,2-Dichloroethane-d_4
1,4-Difluorobenzene	Toluene-d_8
1,4-Difluorobenzene-d_4	4-Bromofluorobenzene
Chlorobenzene-d_5	

2.1. Table I is a list of volatile organic compounds and their reporting limits of quantitation (LOQs). (Tables I-IV are found at the end of this procedure.)

2.2. Table II lists the purgeable organic compounds and their characteristic masses. The volatile internal standards with the corresponding analytes are listed in Table III.

3. Interferences

3.1. Impurities in the purge gas and solvent vapors in the laboratory can contaminate samples. The analytical system must be demonstrated to be free from contamination under the condition of the analysis by running laboratory reagent blanks (i.e., method blanks). The use of non-TFE tubing, non-TFE thread sealants, or flow controllers with rubber components in the purging device must be avoided.

3.2. Samples can be contaminated by diffusion of volatile organics (particularly fluorocarbons and methylene chloride) through the septum seal into the sample during storage and handling. A trip blank, prepared from reagent water and carried through the holding period and the analysis protocol, serves as a check on such contamination. One trip blank per request group should be analyzed.

3.3. Contamination by carryover can occur whenever high-level and low-level samples are sequentially analyzed. Whenever an unusually concentrated sample is encountered, all following samples must be reanalyzed if carryover is suspected, or a method blank should follow until the contamination has been eliminated.

4. Collection and Storage of Samples

4.1. Soil samples are collected in 40-mL screw-cap VOA vials with Teflon-lined silicone septa. The vials and septa should be washed with soap and water, rinsed with distilled deionized water, placed in a muffle furnace or oven, and dried at 70°C for approximately 1 h.

4.2. VOA vials for samples with solid or semisolid (sludges) matrices should be filled as completely as possible. The vials should be tapped lightly as they are filled to try to eliminate as much free air space as possible. Two VOA vials should be filled at each sample location.

4.3. All samples must be refrigerated between 0 and 4°C.

4.4. The holding time for soil samples is 14 days from the date of collection.

5. Apparatus

5.1 Purge and trap configuration.

5.1.1. A purge-and-trap apparatus as detailed in SW-846 Method 5030 is used. Applicable operating parameters are determined by the analyst (adsorbent trap selection, purge time, desorb time and temperature, and bake time and temperature).

5.2. Gas chromatograph/mass spectrometer/data system.

5.2.1. The GC must be temperature-programmable and should be equipped with adjustable differential flow controllers so that the column flow rate will be reproducible throughout desorption and temperature program operation. The GC is interfaced to the MS with a jet separator or is directly coupled.

5.2.2. Gas chromatographic column: Supelco VOCOL, 105-m x 0.53-mm x 3.0-μm film thickness or equivalent.

5.2.3. Mass spectrometer: Mass-spectral data are obtained with electron-impact ionization at a nominal electron energy of 70 eV. The mass spectrometer scans from 35 to 300 amu every 1 s or less and must produce a mass spectrum that meets all criteria in Step 7.2.1 when 50 ng of 4-bromofluorobenzene is introduced into the GC.

5.2.4. Data system: A computer system that allows the continuous acquisition and storage on machine-readable media of all mass spectra obtained throughout the duration of the chromatographic program must be interfaced to the mass spectrometer. The computer must have software that allows searching any GC/MS data file for ions of a specified mass and plotting such ion abundances versus time or scan number. This type of plot is defined as an extracted ion current profile (EICP). Software must also be available that allows integrating the abundances in any EICP between NIST and/or EPA mass-spectral libraries.

5.3. Microsyringes: 10-, 25-, 100-, and 500-μL, for injecting the appropriate standards into the reagent water.

5.4. Syringes: 5- or 25-mL, for measuring the required aliquot of reagent water.

5.5. Balance: analytical, capable of accurately weighing 0.001 g.

5.6. Micro reaction vessels: 2- or 3-mL with Teflon-lined miniert valves, for the storage of stock or secondary standard solutions.

5.7. Disposable Pasteur pipettes: used for transferring stock or secondary standard solution from the volumetric flask to the micro reaction vessels.

6. Reagents/Standards

6.1. Methanol (CH_3OH). Pesticide quality or equivalent, demonstrated to be free of analytes. Must be stored apart from other solvents.

6.2. Reagent water. Must be purged with nitrogen for at least 30 min before use. Water must be free of interferents at the limit of quantitation (LOQ).

Alternatively, HPLC grade water may be purchased. Purity of water used must be verified by GC/MS analysis.

6.3. Stock solutions. All instructions for preparation of stock solutions and dilutions are in the VOA standard preparation notebook located in Room 115, TA-59. See Table IV.

6.4. Instructions for storage of all standards, and expiration dates are found in the VOA standards preparation notebook. Expiration dates are to be strictly enforced.

6.5. Surrogate standards. The surrogates used are 1,2-dichloroethane-d_4, toluene-d_8, and 4-bromofluorobenzene.

6.6. Internal standards. The internal standards used are chlorobenzene-d_5, 1,4-difluorobenzene, 1,4-dichlorobenzene-d_4, and pentafluorobenzene.

6.7. 4-Bromofluorobenzene (BFB) standard. A standard solution containing 50 ng/μL of BFB in methanol is used for verifying the tune of the MS.

6.8. Calibration standards. Secondary calibration standards are prepared from calibration stock standards. The solutions are prepared in 5- or 25-mL aliquots of reagent water.

6.9. Matrix spiking standards. Matrix spiking standard is prepared from volatile organic compounds which are representative of the compounds being investigated. The compounds used are 1,1-dichloroethene, benzene, trichloroethene, toluene, and chlorobenzene. A 10-μL aliquot of the matrix spiking standard is used for 5-mL samples (50-μL aliquot for 25-mL aqueous samples).

7. Calibration

7.1. See Step 9.1 for explanation of Quality Control requirements in the tiered structure.

7.2. Initial calibration, Tiers 2 and 3.

7.2.1. Each GC/MS system must be hardware-tuned to meet the criteria listed below for a direct injection or purging of 50 ng of 4-bromofluorobenzene. Analyses can not proceed until the criteria are met.

Mass	Relative Abundance Criteria
50	15 to 40% of mass 95
75	30 to 60% of mass 95
95	base peak, 100% relative abundance
96	5 to 9% of mass 95
173	<2% of mass 174
174	>50% of mass 95
175	5 to 9% of mass 174
176	≥95% but ≤101% of mass 174
177	5 to 9% of mass 176

7.2.2. Five system performance check compounds (SPCCs) are checked for a minimum average response factor (RF): chloromethane, 1,1-dichloroethane, bromoform, 1,1,2,2-tetrachloroethane, and chlorobenzene. The minimum acceptable average RF for these compounds should be 0.300 (0.250 for bromoform). These compounds typically have RFs of 0.4-0.6 and are used to check overall instrument performance and/or degradation caused by contaminated lines or active sites in the system.

7.2.2.1. Chloromethane. This compound is easily lost as a result of fast purge flow, or because the stock or working calibration standard (VOC #6 mix only) is degrading. The purge gas (helium) flow rate should be 25-40 mL/min on the purge-and-trap device. Optimize the flow rate to provide the best response for chloromethane and bromoform.

7.2.2.2. Bromoform. This compound will most likely be purged very poorly if the purge flow is too slow. Cold spots and/or active sites in the transfer line may adversely affect response.

7.2.2.3. Tetrachloroethane and 1,1-dichloroethane. These compounds are degraded by contaminated transfer lines in purge-and-trap systems and/or active sites in trapping materials.

7.2.3. Continuing calibration check (CCC) compounds are used as a measure of the linearity of the response factors. The percent relative standard deviation (%RSD) is checked for the CCCs. These compounds are 1,1-dichloroethene, chloroform, 1,2-dichloropropane, toluene, ethylbenzene, and vinyl chloride. The maximum %RSD for these compounds is 30%. The %RSD for all analytes should be < 30%.

7.3. Continuing daily calibration, Tiers 1, 2 and 3.

7.3.1. Before samples are analyzed, inject or purge 50 ng of the 4-bromofluorobenzene (BFB) standard (1 μL of the 25-μg/mL

4-bromofluorobenzene solution for direct injection and 10 μL of the 25-μg/mL 4-bromofluorobenzene into 5 mL of reagent water for purging). The resultant mass spectra for BFB must meet all the criteria given in Step 7.1.1. This procedure must be performed every 12 h of analysis.

7.3.2. Before samples are analyzed, the initial calibration curve for each compound must be checked and verified once every 12 h by analyzing a 50-ng/mL continuing calibration standard and checking the SPCCs and CCCs.

7.3.3. The minimum response factor for the SPCCs must be 0.300 (0.250 for bromoform). Some possible problems are standard mixture degradation, contamination at the front end of the analytical column, and active sites in the column or chromatographic system.

7.3.4. The CCCs are used to check the validity of the initial calibration by calculating the percent difference between the average response factor from the initial calibration and the response factor from the current verification check standard. If the percent difference for any compound is 20%, the laboratory should consider this a warning limit. If the percent difference for each CCC is <25%, the initial calibration is assumed to be valid. If this criterion is not met (>25% difference) for any one CCC, corrective action must be taken. The percent difference for all analytes should be less than or equal to 25%. Corrective action can include, but is not limited to, reanalysis of the verification check standard, cutting a portion of the column, or using a new working calibration standard. If a source of the problem cannot be determined after corrective action has been taken, a new five-point calibration (initial calibration) must be generated. See Step 7.1. Both SPCC and CCC criteria **must** be met before quantitative sample analysis begins.

8. Procedure

8.1. Low- level soil analysis.

8.1.1. BFB tuning criteria and continuing calibration criteria must be met before analysis of samples can begin.

8.1.2. Parameters.

Precision Autosampler	O I Sample Concentrator
Purge flow: 35 mL/min	Purge time: 8-10 min
Purge temp: 40°C	Desorb preheat: 20°C
Soil program for all samples	Desorb time: 2.00 min
Standard: Yes	Desorb temp: 180°
Line heat: 100	Trap bake time: 14.0 min

Sample heat: 40
Preheat: 30 sec.
Water volume: 5 mL
Pre-purge: 0
Purge time: 8.0 min
Flushes: 1
Soil stir: Yes
Desorb time: 2.0 min
Water trap volume: 0

Bake temp: 215
Transfer line: 135
Valve temp: 125

8.1.3. A sample batch typically consists of a BFB, continuing calibration, reagent water blank, and samples up to the 12-h limit on BFB tune. Samples are set up as described in the following sections.

8.1.4. Assemble the bottom portion of the autosampler vial. Place 5 g of soil or sludge on top of the frit of the autosampler vial. Weigh the vial. Record the exact weight. Add a stirring bar and seal the vial. If percent moistures have not been done, see Section 8.3 for instructions on percent moisture determinations. All data is to be recorded on the VOA benchsheet.

8.1.5. For each sample analyzed, including BFB and continuing calibrations, an entry must be made in the sample injection log associated with each instrument. This entry must be made within 24 h of data acquisition. This entry includes factors such as date and time sample was run, internal standard values, and surrogate recovery.

8.1.6. If the initial analysis of a sample shows a concentration of analytes that exceeds the initial calibration range (higher than 200 μg/kg), the sample will need to be reanalyzed using an aliquot of <5 g but not <1 g. If compound saturation still occurs with a 1-g aliquot, a medium-level analysis is necessary (see Section 8.2). Secondary-ion quantitation is allowed only when there are sample interferences with the primary ion. When a sample is analyzed that has saturated ions from a compound, the analysis must be followed by a blank water analysis. Sample analysis may not resume until a blank can be analyzed and found free of interferences. If this occurs during an automated run, reanalyze all following samples if carryover from the saturated compound is suspected.

8.1.7. If one or more of the surrogate spiking compounds are not within the control limits and/or the internal standard areas are +100%/-50% of the continuing calibration in a sample, that sample should be reanalyzed. See Section 9.2 for details.

8.1.8. A matrix spike (MS), matrix spike duplicate (MSD), and matrix spike control (MSC) may be analyzed with every analytical batch, depending

upon which QC Tier is being used. A sample submitted by a customer will be used as the matrix medium. Ten microliters of the matrix spike mixture is injected into 5 mL of reagent water and then added to a 5-g sample. See Step 8.1.5.

8.1.9. If a trip, field, or holding blank is submitted with the soil samples, the sample should be prepared and analyzed as a method blank. The sample is analyzed with the associated soil samples using the same initial and continuing calibration. The surrogate recoveries for the trip, field, or holding blank should meet the control limits set for soil analysis.

8.2. Medium-level soil analysis.

8.2.1. The medium-level soil method is based on extracting the soil or sediment sample with methanol. An aliquot of the methanol extract is added to reagent water containing the surrogate and internal standard. This method is used when saturation occurs or would occur during analysis of a 1-g sample.

NOTE: Steps 8.2.2 and 8.2.3 must be performed rapidly to avoid loss of volatile organics.

8.2.2. To avoid the possible loss of volatile compounds, gently mix the contents of the sample container including any supernatant liquids with a narrow metal spatula. Using a top-loading balance, weigh 5 g of sample (wet weight) into a tared 40-mL vial. Record the actual weight to the nearest 0.1 g.

8.2.3. Quickly add 5.0 mL of methanol to the vial. Cap and shake for 2 min.

8.2.4. If the initial analysis of a sample shows a concentration of analytes that exceeds the initial calibration range (higher than 200 μg/kg), the sample will need to be diluted and reanalyzed. Secondary-ion quantitation is allowed only when there are sample interferences with the primary ion. If a primary-ion saturation occurs during an automated run, all following samples should be reanalyzed if carryover from the saturated compound is suspected.

8.2.5. For a matrix spike in the medium-level sediment or soil samples, add 10.0 μL of matrix spike solution to the 5-mL syringe containing the methanol extract.

8.3. Determine percent moisture on all samples that are not radioactive or biohazards or where an insufficient quantity of sample was submitted. If a hazard prevents this determination, document this and include in the data packet. Determine percent moisture as follows:

8.3.1. Weigh an empty aluminum weighing pan. Record weight.

8.3.2. Add approximately 5 g of sample and reweigh. Record weight.

8.3.3. Place in a drying oven at 80-100°C for at least 24 h. Cool and reweigh, recording dry weight.

8.3.4. Percent moisture is calculated by:

$$\frac{\text{wet weight} - \text{dry weight}}{\text{dry weight}} \times 100$$

9. Quality Control

9.1. The Quality Control (QC) requirements are defined in a tiered structure as follows:

Tier 1: 1-point calibration every day.
1 method blank every day.

Tier 2: 3-point initial calibration, daily check standard.
BFB tune check every day.
1 method blank every day.

Tier 3: 5-point initial calibration, daily check standard.
BFB tune check every day.
1 method blank per analytical batch.
Blind QC samples at a rate of no more than 10%.
Matrix spike and matrix spike duplicate for each analytical batch.
12-h clock for tune check and daily check standard.

9.2. Control limits.

9.2.1. The control limits that follow are applicable only to the QC Tier requested for each analysis.

9.2.2. The method blank must be free of any target volatile organic components at or above the limit of quantitation (LOQ) with the exception of acetone, methylene chloride, 2-butanone, and toluene. These compounds can be detected in the method blank up to 5 times their LOQ.

9.2.3. The following surrogates are spiked into each sample and analyzed as a measure of analyte recovery: 1,2-dichloroethane-d_4, toluene-d_8, and

4-bromofluorobenzene. If one or more of the surrogate spiking compounds are not within the control limits, those samples should be reanalyzed. If the reanalysis demonstrates similar results and the surrogate recoveries in the associated method blank are within the control limits, the out-of-control situation could be attributed to matrix effect and the results from the initial analysis should be reported. If the reanalysis of the sample has surrogate recoveries within the control limits, the out-of-control condition could be due to analyst error or to a degradation of the surrogate spiking mix. In this case the results from the reanalysis should be reported.

SURROGATE RECOVERY CONTROL LIMITS

1,2-Dichloroethane-d_4	70-121%
Toluene-d_8	81-117%
4-Bromofluorobenzene	74-121%

9.2.4. A matrix spike and a matrix spike duplicate are analyzed under Tier 3 QC requirments. Spikes are run at a frequency of 10% for each respective matrix. The data is interpreted in terms of percent recovery and relative percent difference (RPD). The control limits for percent recovery and RPD are generated from the historical data of each respective matrix.

9.2.5. "Blind" QC samples are analyzed as required under the tier structure. Those analyses requiring blind QCs must be run at a frequency of 10% of the total samples analyzed per matrix. These samples are analyzed in exactly the same manner as submitted samples.

10. Data Interpretation

10.1. Qualitative analysis.

10.1.1. An analyte is identified by comparison of the sample mass spectrum with the mass spectrum of the compound from a standard (standard reference spectrum). The standard reference spectrum is obtained through analysis of a calibration standard. Two criteria must be satisfied to verify identification: (1) elution of the sample component at the same GC relative retention time (RRT) as that component in the daily standard; and (2) correspondence of the mass spectra of the sample component and the standard component.

10.1.1.1. The sample component RRT must compare within ±0.06 units of the RRT of the standard component in the daily calibration. If coelution of interfering components prohibits accurate assignment of the sample component RRT from the total ion chromatogram, the RRT should be assigned by

using extracted ion current profiles (EIPCs) for ions unique to the component of interest.

10.1.1.2. All ions present in the standard mass spectrum at a relative intensity >10% must be present in the sample spectrum. The relative intensities of these ions must agree within ±20% between the standard and sample spectra.

EXAMPLE. For an ion with an abundance of 50% in the standard spectra, the corresponding sample ion abundance must be between 30% and 70%.

10.1.2. For samples containing components not associated with the calibration standards (non-target volatile organic components), a library search may be made for the purpose of tentative identification. Ten organic compounds of greatest concentration which are not identified as part of the calibration standard may be identified. Non-target volatile organic components with a response of <10% of the nearest internal standard are not required to be searched. Comparison of sample spectra with the spectra from the library searches will assign a tentative identification.

10.1.2.1. Relative intensities of major ions in the reference spectrum (ions >10% of the most abundant ion) should be present in the sample spectrum.

10.1.2.2. The relative intensities of the major ions should agree within ±20%.

EXAMPLE. For an ion with an abundance of 50% in the standard spectrum, the corresponding sample ion abundance must be between 30 and 70%.

10.1.2.3. Molecular ions present in the reference spectrum should be present in the sample spectrum.

10.1.2.4. Ions present in the sample spectrum but not in the reference spectrum should be reviewed for possible background contamination or presence of coeluting compounds.

10.1.2.5. Ions present in the reference spectrum but not in the sample spectrum should be reviewed for possible subtraction from the sample spectrum because of background contamination of coeluting peaks.

If the compound does not meet the identification criteria listed above, the compound shall be reported as unknown.

10.2. Quantitative analysis.

10.2.1. When a compound has been identified, the quantitation of that compound will be based on the integrated abundance from the EICP of the primary characteristic ion (see Table II). The compound will be quantitated using an internal standard technique. The internal standard used will be the one nearest the retention time of that of a given analyte.

10.2.1.2. The concentration of each identified analyte in the sample is calculated as follows:

$$\text{concentration } (\mu g/kg) = \frac{(Ax)\ (Is)}{(Ais)\ (RF)\ (W_s)\ (D)} ,$$

where Ax = area of characteristic ion for compound being measured,

Is = amount of internal standard injected (ng),

Ais = area of characteristic ion for the internal standard,

RF = response factor for compound being measured,

W_s = weight of sample extracted (g) or purged, and

$D = \frac{100 - \%\ \text{moisture}}{100}$.

10.2.2. Where applicable, an estimate of concentration for non-target volatile organic components in the sample should be made. The areas Ax and Ais (defined in Step 10.2.1.2) should be from the total ion chromatogram, and the RF for the compound should be assumed to be 1. The concentration obtained should be reported indicating (1) that the value is an estimate and (2) which internal standard was used to determine concentration. The nearest internal standard free of interferences is used.

10.2.3. Results are reported without method blank correction. Method blanks will be reported as discrete samples.

11. Proper Waste Disposal Practices

11.1. General waste management.

11.1.1. Each analyst within the section shall be given Waste Generator Training by EM-8 within 90 days of date of hire.

11.1.2. Wherever possible, the generation of waste shall be minimized through reduction, reuse, or recycling. Wherever possible, containers should be segregated to reflect the nature of the hazardous waste and the eventual waste-disposal methods. For example, chlorinated solvent wastes should be segregated from flammable, nonchlorinated solvents and >50-ppm PCB-contaminated waste should be segregated from <50-ppm PCB-contaminated waste. This is especially important in analysis areas where the waste generated is considered to be mixed waste.

11.1.3. Categorize the waste using a Waste Profile Form from EM-8.

11.1.4. Upon completion of a Waste Profile Form, the waste is disposed of by completing a Waste Disposal Request Form from EM-7. Approximately 30 days is required for the disposal of waste after the completion of the listed forms.

11.2. Solid waste.

11.2.1. Solid hazardous waste, such as contaminated paper towels, pipettes, spent syringes, and glass vials, is accumulated in a covered plastic container lined with a plastic bag. The container is labeled with a hazardous waste label identifying the hazard, the type of material being stored (i.e., pipettes, paper towels, etc.), the accumulation start date, and the laboratory of origin.

11.2.2. The waste container is opened only for the time necessary to add the waste.

11.3. Liquid waste.

11.3.1. Liquid wastes, such as spent samples and spent solvents that are not reuseable, are accumulated in glass or steel containers appropriate for the type of sample being stored. For example, caustic materials should be stored in glass containers whereas spent solvents that are not to be recycled should be stored in metal containers.

11.3.2. All containers storing hazardous liquid materials must be secondarily contained. The container is labeled with a hazardous waste label identifying the hazard, the type of material being stored (i.e., pipettes, paper towels, etc.), the accumulation start date, and the laboratory of origin.

11.3.3. The waste container is opened only for the time necessary to add the waste.

11.4. Unused samples.

11.4.1. Return unused environmental samples to the Sample Management section for disposal.

12. Source Materials

12.1. "Test Methods for Evaluating Solid Waste, Physical/Chemical Methods," Laboratory Manual Vol. 1B Method 8260, report no. SW-846 (November 1986).

12.2. "Statement of Work for Organics Analysis," USEPA Contract Laboratory Program (October 1986).

12.3. "Hazardous and Mixed Waste," Administrative Requirement 10-3, in *Environment, Safety, and Health Manual*, Los Alamos National Laboratory Manual, Chapter 1 (most recent edition).

12.4. "Low-Level Radioactive Solid Waste," Administrative Requirement 10-2, in *Environment, Safety, and Health Manual*, Los Alamos National Laboratory Manual, Chapter 1 (most recent edition).

TABLE I. VOLATILE ORGANIC COMPOUNDS

Analyte	CAS No.	LOQ µg/kg
Chloromethane	74-87-3	20
Vinyl chloride	75-01-4	20
Bromomethane	74-83-9	20
Chloroethane	75-00-3	20
Acetone	67-64-1	20
Acrolein	107-02-8	200
Acrylonitrile	107-13-1	200
2-Chloroethyl vinyl ether	110-75-8	200
Dichlorodifluoromethane	75-71-8	10
Iodomethane	74-88-4	5.0
Trichlorotrifluoroethane	76-13-1	5.0
Trichlorofluoromethane	75-69-4	5.0
Methylene chloride	75-09-2	5.0
1,1-Dichloroethene	75-35-4	5.0
Carbon disulfide	75-15-0	5.0
trans-1,2-Dichloroethene	156-60-5	5.0
1,1-Dichloroethane	75-34-3	5.0
cis-1,2-Dichloroethene	156-59-2	5.0
Bromochloromethane	74-97-5	5.0
Chloroform	67-66-3	5.0
1,2-Dichloroethane	107-06-2	5.0
1,1-Dichloropropane	563-58-6	5.0
Vinyl acetate	108-05-4	10
2-Butanone	78-93-3	20
2,2-Dichloropropane	594-20-7	5.0
1,1,1-Trichloroethane	71-55-6	5.0
Carbon tetrachloride	56-23-5	5.0
Benzene	71-43-2	5.0

TABLE I. VOLATILE ORGANIC COMPOUNDS (cont)

Analyte	CAS No.	LOQ µg/kg
1,2-Dichloropropane	78-87-5	5.0
Trichloroethene	79-01-6	5.0
Dibromomethane	74-95-3	5.0
Bromodichloromethane	75-27-4	5.0
trans-1,3-Dichloropropene	1006-10-26	5.0
cis-1,3-Dichloropropene	1006-10-15	5.0
1,1,2-Trichloroethane	79-00-5	5.0
1,3-Dichloropropane	142-28-9	5.0
Chlorodibromomethane	124-48-1	5.0
4-Methyl-2-pentanone	10-81-01	20
Toluene	108-88-3	5.0
2-Hexanone	59-17-86	20
1,2-Dibromoethane	106-93-4	5.0
Tetrachloroethene	127-18-4	5.0
Chlorobenzene	108-90-7	5.0
1,1,1,2-Tetrachloroethane	630-20-6	5.0
Ethylbenzene	100-41-4	5.0
o,m,p-Xylene (mixed)	133-020-7	5.0
Styrene	100-42-5	5.0
Bromoform	75-25-2	5.0
1,1,2,2-Tetrachloroethane	79-34-5	5.0
1,2,3-Trichloropropane	96-18-4	5.0
Isopropylbenzene	98-82-8	5.0
Bromobenzene	108-86-1	5.0
n-Propylbenzene	103-65-1	5.0
2-Chlorotoluene	95-49-8	5.0
4-Chlorotoluene	106-43-4	5.0
1,3,5-Trimethylbenzene	108-67-8	5.0

TABLE I. VOLATILE ORGANIC COMPOUNDS (cont)

Analyte	CAS No.	LOQ µg/kg
tert-Butylbenzene	98-06-6	5.0
1,2,4-Trimethylbenzene	95-63-6	5.0
sec-Butylbenzene	135-98-8	5.0
1,3-Dichlorobenzene	541-73-1	5.0
1,4-Dichlorobenzene	106-46-7	5.0
p-Isopropyltoluene	99-87-6	5.0
1,2-Dichlorobenzene	95-50-1	5.0
n-Butylbenzene	104-51-8	5.0
1,2-Dibromo-3-chloropropane	96-12-8	100
Hexachlorobutadiene	87683	5.0
Napthalene	91203	5.0
1,2,3-Trichlorobenzene	87616	5.0

TABLE II. CHARACTERISTIC MASSES (M/Z) FOR PURGEABLE ORGANIC COMPOUNDS

Analyte	Primary Characteristic Ion	Secondary Characteristic Ion(s)
Acetone	43	58
Acrylonitrile	53	52
Acrolein	57	56,55
Benzene	78	-
Bromobenzene	156	77,158
Bromochloromethane	128	49,130
Bromodichloromethane	83	85,127
Bromoform	173	175,254
Bromoethane	94	96
2-Butanone	43	72
n-Butylbenzene	91	92,134
sec-Butylbenzene	105	134
tert-Butylbenzene	119	91,134
Carbon tetrachloride	117	119
Chlorobenzene	112	77,114
Chloroethane	64	66
Chloroethyl vinyl ether	63	65,106
Chloroform	83	85
Chloromethane	50	52
2-Chlorotoluene	91	126
4-Chlorotoluene	91	126
1,2-Dibromo-3-chloropropane	75	155,157
Dibromochloromethane	129	127
1,2-Dibromoethane	107	109,188
Dibromoethane	93	95,174
1,2-Dichlorobenzene	146	111,148
1,3-Dichlorobenzene	146	111,148
1,4-Dichlorobenzene	146	111,148
Dichlorodifluoromethane	85	87
1,1-Dichloroethane	63	65,83
1,2-Dichloroethane	62	98
1,1-Dichloroethene	96	61,63
cis-1,2-Dichloroethene	96	61,98
trans-1,2-Dichloroethene	96	61,98
1,2-Dichloropropane	63	112
1,3-Dichloropropane	76	78

TABLE II. CHARACTERISTIC MASSES (M/Z) FOR PURGEABLE ORGANIC COMPOUNDS (cont)

Analyte	Primary Characteristic Ion	Secondary Characteristic Ion(s)
2,2-Dichloropropane	77	97
1,1-Dichloropropene	75	110,77
cis-1,3-Dichloropropene	75	77,39
trans-1,3-Dichloropropene	75	77,39
Ethylbenzene	91	106
2-Hexanone	43	58,85,100
Isopropylbenzene	105	120
p-Isopropyltoluene	119	134,91
Methylene chloride	84	86,49
4-Methyl-2-penatone	43	58,85,100
n-Propylbenzene	91	120
Styrene	104	78
1,1,1,2-Tetrachloroethane	131	133,119
1,1,2,2-Tetrachloroethane	83	131,85
Tetrachloroethene	166	168,129
Toluene	92	91
1,1,1-Trichloroethane	97	99,61
1,1,2-Trichloroethane	83	97,85
Trichloroethene	95	130,132
Trichlorofluoromethane	101	103
1,2,3-Trichloropropane	75	77
1,2,4-Trimethylbenzene	105	120
1,3,5-Trimethylbenzene	105	120
Vinyl chloride	62	64
o-Xylene	106	91
m,p-Xylene	106	91
INTERNAL STANDARDS/SURROGATES		
Pentafluorobenzene	168	
1,4-Difluorobenzene	114	
Chlorobenzene-d_5	117	
1,4-Dichlorobenzene	152	
4-Bromofluorobenzene	95	174,176
Toluene-d_8	98	
1,2-Dichloroethane-d_4	65	

TABLE III. VOLATILE INTERNAL STANDARDS WITH CORRESPONDING ANALYTES ASSIGNED FOR QUANTITATION

Pentafluorobenzene

Acetone
Acrolein
Acrylonitrile
Benzene
Bromochloromethane
Bromomethane
2-Butanone
Carbon disulfide
Carbon tetrachloride
Chloroethane
Chloroform
Chloromethane
Dichlorodifluoromethane
1,2-Dichloroethane
1,1-Dichloroethane
1,1-Dichloroethene
1,2-Dichloroethane-d_4 [a]
cis-1,2-Dichloroethene
trans-1,2-Dichloroethene
2,2-Dichloropropane
1,1-Dichloropropene
Iodomethane
Methylene chloride
1,1,1-Trichloroethane
Trichlorofluoromethane
Trichlorotrifluoroethane
Vinyl acetate
Vinyl chloride

1,4-Difluorobenzene

Bromodichloromethane
2-Chloroethyl vinyl ether
1,2-Dibromoethane
Dibromomethane
trans-1,3-Dichloropropene
Toluene-d_8 [a]
Trichloroethene

Chlorobenzene

Bromoform
Chlorodibromomethane
Chlorobenzene
1,2-Dibromoethane
1,3-Dichloropropane
cis-1,3-Dichloropropene
Ethylbenzene
2-Hexanone
4-Methyl-2-pentanone
Styrene
Toluene
1,1,2-Trichloroethane
Tetrachloroethane
1,1,1,2-Tetrachloroethane
o,m,p-Xylenes

1,4-Dichlorobenzene-d_4

Bromobenzene
n-Butylbenzene
sec-Butylbenzene
tert-Butylbenzene
2-Chlorotoluene
4-Chlorotoluene
1,2-Dibromo-3-chloropropane

TABLE III. VOLATILE INTERNAL STANDARDS WITH CORRESPONDING ANALYTES ASSIGNED FOR QUANTITATION (cont)

1,4-Dichlorobenzene-d_4 (cont)

1,2-Dichlorobenzene
1,3-Dichlorobenzene
1,4-Dichlorobenzene
n-Propylbenzene
1,1,2,2-Tetrachloroethane
1,2,3-Trichloropropane
1,2,4-Trimethylbenzene
1,3,5-Trimethylbenzene
4-Bromofluorobenzene [a]

[a] Surrogate

TABLE IV. STOCK AND WORKING CALIBRATION SOLUTIONS

Chemical name/concentration	Final concentration Stock (μg/mL)	Working std. (μg/mL)
INTERNAL STANDARD MIX		
Pentafluorobenzene (1000 μg/mL)	50	NA
Chlorobenzene-d_5 (1000 μg/mL)	50	NA
1,4-Difluorobenzene (1000 μg/mL)	50	NA
1,4-Dichlorobenzene-d_4 (1000 μg/mL)	50	NA
CALIBRATION STANDARD MIX		
HSL Custom standard		
Acetone (1000 μg/mL)	100	25
Methyl ethyl ketone (1000 μg/mL)	100	25
Carbon disulfide (1000 μg/mL)	100	25
4-methyl-2-pentanone (1000 μg/mL)	100	25
Vinyl acetate (1000 μg/mL)	100	25
2-Chloroethyl vinyl ether (1000 μg/mL)	100	25
2-Hexanone (1000 μg/mL)	100	25
Acrolein (1000 μg/mL)	100	25
Acrylonitrile (1000 μg/mL)	100	25
Iodomethane (1000 μg/mL)	100	25
Freon 113 (1000 μg/mL)	100	25
Purgeable Surrogate Standard Mix - CLP		
Bromofluorobenzene (250 μg/mL)	50	NA
1,2-Dichloroethane-d_4 (250 μg/mL)	50	NA
Toluene-d_8 (250 μg/mL)	50	NA

TABLE IV. (cont)

Chemical name/concentration	Final concentration Stock (μg/mL)	Working std. (μg/mL)
Volatile Organic Compounds Mix #1		
sec-Butylbenzene (2000 μg/mL)	100	25
tert-Butylbenzene (2000 μg/mL)	100	25
Chlolorobenzene (2000 μg/mL)	100	25
2-Chlorotoluene (2000 μg/mL)	100	25
4-Chlorotoluene (2000 μg/mL)	100	25
1,2-Dichlorobenzene (2000 μg/mL)	100	25
1,3-Dichorobenzene (2000 μg/mL)	100	25
1,4-Dichlorobenzene (2000 μg/mL)	100	25
Isopropylbenzene (2000 μg/mL)	100	25
n-Propylbenzene (2000 μg/mL)	100	25
o-Xylene (2000 μg/mL)	100	25
p-Xylene (2000 μg/mL)	100	25
Volatile Organic Compounds Mix #2		
Benzene (2000 μg/mL)	100	25
Bromobenzene (2000 μg/mL)	100	25
n-Butylbenzene (2000 μg/mL)	100	25
Ethylbenzene (2000 μg/mL)	100	25
p-Isopropyltoluene (2000 μg/mL)	100	25
Naphthalene (2000 μg/mL)	100	25
Styrene (2000 μg/mL)	100	25
Toluene (2000 μg/mL)	100	25
1,2,3-Trichlorobenzene (2000 μg/mL)	100	25
1,2,4-Trichlorobenzene (2000 μg/mL)	100	25

TABLE IV. (cont)

Chemical name/concentration	Final concentration Stock (μg/mL)	Working std. (μg/mL)
Volatile Organic Compounds Mix #2 (cont)		
1,2,4-Trimethylbenezne (2000 μg/mL)	100	25
1,2,5-Trimethylbenzene (2000 μg/mL)	100	25
m-Xylene (2000 μg/mL)	100	25
Volatile Organic Compounds Mix #3		
1,2-Dibromo-3-chloropropane (2000 μg/mL)	100	25
1,2-Dibromomethane (2000 μg/mL)	100	25
1,2-Dichloroethane (2000 μg/mL)	100	25
1,2-Dichloropropane (2000 μg/mL)	100	25
1,3-Dichloropropane (2000 μg/mL)	100	25
1,1-Dichloropropene (2000 μg/mL)	100	25
1,3-Dichloropropene (4000 μg/mL) *	400	50
Hexachlorobutadiene (2000 μg/mL)	100	25
1,1,1,2-Tetrachloroethane (2000 μg/mL)	100	25
1,1,2,2-Tetrachloroethane (2000 μg/mL)	100	25
1,1,2-Trichloroethane (2000 μg/mL)	100	25
Trichloroethene (2000 μg/mL)	100	25
1,2,3-Trichloropropane (2000 μg/mL)	100	25
Volatile Organic Compounds Mix #4		
Bromochloromethane (2000 μg/mL)	100	25
Bromoform (2000 μg/mL)	100	25
Carbon tetrachlororide (2000 μg/mL)	100	25
Chloroform (2000 μg/mL)	100	25
Dibromomethane (2000 μg/mL)	100	25

TABLE IV. (cont)

Chemical name/concentration	Final concentration Stock (μg/mL)	Working std. (μg/mL)
Volatile Organic Compounds Mix #4 (cont)		
1,1-Dichloroethane (2000 μg/mL)	100	25
2,2-Dichloropropane (2000 μg/mL)	100	25
Tetrachloroethene (2000 μg/mL)	100	25
1,1,1-Trichloroethane (2000 μg/mL)	100	25
Volatile Organic Compounds Mix #5		
Bromodichloromethane (2000 μg/mL)	100	25
Dibromochloromethane (2000 μg/mL)	100	25
1,1-Dichloroethene (2000 μg/mL)	100	25
cis-1,2-Dichloroethene (2000 μg/mL)	100	25
trans-1,2-Dichloroethene (2000 μg/mL)	100	25
Methylene chloride (2000 μg/mL)	100	25
VOC #6 CALIBRATION STANDARD MIX		
Volatile Organic Compounds Mix #6		
Bromomethane (2000 μg/mL)	100	25
Chloromethane (2000 μg/mL)	100	25
Chloroethane (2000 μg/mL)	100	25
Dichlorodifluoromethane (2000 μg/mL)	100	25
Trichlorofluoromethane (2000 μg/mL)	100	25
Vinyl chloride (2000 μg/mL)	100	25

GROSS ALPHA/BETA SCREENING OF SILICATES IN A MOBILE RADIOLOGICAL LABORATORY

Analyte: Alpha- and beta-emitting nuclides	**Method No.:** MLR100
Matrix: Silicates	**Minimum Detectable Activity:** Alpha: 60 pCi/g Beta: 24 pCi/g
Procedure: Gas flow proportional counting	**Accuracy and Precision:** Alpha: 94 ± 16% Beta: 111 ± 14%
Effective Date: 05/28/92	**Author:** George Brooks

SAFETY NOTE: Before beginning this procedure, read all of the Material Safety Data Sheets for the chemicals listed in Sec. 7. Read Sec. 4.3 of the EM-9 Safety Manual for information on personal protective clothing and equipment. Read Sec. 12 of this procedure and Source Material 13.5 and 13.6 for proper waste disposal practices.

1. Principle of Method

1.1. Samples are mounted directly on stainless steel planchets without chemical dissolution or evaporation.

1.2. Samples are counted for 5 min on a low-background, gas-flow proportional counting system.

2. Sensitivity

2.1. The sensitivity will vary greatly for alpha activity and to a lesser degree for beta activity. The variance of the alpha activity is more than for conventional wet chemistry techniques. This is largely due to the problem of variant self-absorption from the 1 g of silicate within the plate.

2.2. The minimum detectable limit for alpha is 60 pCi/g and for beta 24 pCi/g, based on a 1-g sample and a 5-min count.

3. Accuracy and Precision

3.1. In a gas flow proportional counter the efficiency and crosstalk between the alpha and beta counts may vary greatly, depending on the energy of the alpha or beta emitter. A ^{239}Pu and a ^{137}Cs point source are used as the basis for all crosstalk and relative efficiency examinations. The accuracies of a given measurement will depend on the actual energies of the unknown nuclides.

3.2. The following accuracy and precision measurements were derived from a set of ^{241}Am and ^{137}Cs quality control (QC) samples examined to determine the initial instrument performance characteristics. The solutions used to make the QC samples are NIST traceable:

Water Samples:
Alpha = 94 ± 16% (N = 15)
Beta = 111 ± 14% (N = 9)

4. Interferences

4.1. The crosstalk correction method may not adequately protect from incorrect identification of radiation from samples containing very low-energy alpha or high-energy beta activities.

4.2. Moderate to high levels of gamma radiation can be misinterpreted as alpha/beta counts by the gas-flow proportional counter.

4.3. Because of self-absorption within the sample (especially when soils are counted directly), it must be assumed that ***the activity is evenly dispersed within the sample matrix, and that the counting process is adequately measuring the average activity within the sample.*** In nonhomogenous samples with low levels of alpha activity, the actual sample activity may be underestimated.

4.4. The addition of a thin Mylar sheet covering the planchet increases self-absorption in samples containing low-energy alpha and beta activities. This may result in an under estimation of the sample activity.

5. Collection and Storage of Samples

5.1. There are no special collection and storage requirements.

6. Apparatus

6.1. Low-level alpha/beta planchet counting instrument, Protean Instrument Corporation Model IPC 9025, run in a windowless mode. The system also integrates a 50-sample automatic sample changer within its mechanical structure.

6.2. P-10 (argon/methane) gas cylinder, 2000 psi.

6.3. Planchets: stainless steel, 2.0- × 0.25-in., Model No. 129-021, Atomic Products Corp., Shirley, New York.

6.4. Mylar sheet: 0.00025 in. thick.

6.5. Photo mount spray adhesive: Scotch brand, catalog no. 6094.

6.6. Plastic weight boats: 2- x 2-in. and 4- x 4-in.

6.7. Infrared heating lamps: dual lamp assembly, Fischer.

6.8. Plastic jig holder and ring for attachment of Mylar surface film to the sample planchet.

6.9. Mortar and pestle.

7. Reagents

7.1. No reagents are used in this technique.

8. Calibration and Standards

8.1. Determine the ionization plateau for both alpha and beta energies. This process should be completed during the initial system setup, or when the P-10 gas cylinder is changed. This step is critical for the proper and accurate operation of the instrument.

8.1.1. Use the plated sources that are kept with the instrument. The alpha source is a plated ^{239}Pu stainless steel 0.5-in. plate, while the beta source is a ^{137}Cs plated source.

8.1.2. Load the alpha source in the sample holder. Start the calibration routine by depressing the **CAL** button on the console.

8.1.2.1. This will access the submenus under this function, Calibration Selection Determination. Use the arrow keys to mark the **DETECTOR VOLTAGE DETERMINATION** function.

8.1.2.2. Depress the **ENTER** key to start the process. Pick the **ACQUIRE PLATEAU DATA** function. This process is automatic, and will step the counter through a series of voltages (30-V increments from 500 to 1800 V). A printout will be generated that shows the counts versus the voltage applied, along with a value of percent counts per voltage step. The plateau should be set at a point 10% beyond the knee of the ionization plateau. The percent counts per voltage step provides the user with additional information for accurate determination of the ionization plateau. For more information, refer to the IPC instrument manual.

8.1.3. Using the beta source, repeat the above process for the beta plateau determination.

8.2. Generate detector efficiencies for the determination of alpha and beta activities in the silicate sample, using a NIST traceable IPL ^{241}Am standard and a NIST SRM 4233-B ^{137}Cs solution.

8.2.1. Prepare a series of standards (3 sets of activity levels, 100, 500, and 1000 dis/min, in duplicate using 1-g soil matrix blanks) that will give a wide range of activity levels for both the alpha and beta components. This will provide statistically significant data points.

8.2.2. Generate a mean value of counts for each of the duplicate sets, for both alpha and beta activities. Determine the efficiency of each set by dividing the count rate (counts/min) by the known activity added to each standard. Examine the data sets for nonlinearity between the different levels. The generated efficiency values should not be significantly different between the sets.

8.2.3. Enter these values into the instrument's calibration file. The menu will ask for the efficiency value and the associated error for these data points. Most gross alpha/beta systems use precipitation curves to derive the efficiency values, but this type of analysis is different. Because the mass of the sample remains constant, only one efficiency point is needed. The menu also requires information on the alpha/beta crosstalk factors. This information will be present on the hardcopy output from the standard runs.

8.3. Determine and track the instrument performance assessment parameters using a ^{239}Pu and a ^{137}Cs point source, a soil blank, and a blank planchet.

8.3.1. Load the samples into the sample holder tubes in the order described in Step 8.3.

8.3.2. Start the calibration by depressing the **CAL** button on the instrument panel.

8.3.2.1. This will bring up the submenu **CONTROL CHART ROUTINES.** Initiate this submenu to bring up the choices: PU-239 STANDARD, CS-137 STANDARD, SOIL BLANK, BLANK PLANCHET, AUTO SEQUENCE ALL. Pick the **AUTO SEQUENCE ALL** function. This will run all the samples for instrument performance assessment routine.

8.3.3. After counting is completed for each sample, the system will notify the user if the sample counts are within acceptable limits. If other messages appear, such as the system is out of limits, notify the Radiological Analysis Van manager. The system should also provide a hard copy of the latest sample counts and a chart displaying the trend in the data.

This information should be signed and appended to the alpha/beta notebook.

8.3.4. For more information concerning any of the above procedures, consult the Protean IPC Instrument Manual, Section 7.

9. Procedure

9.1 Silicates.

9.1.1. Obtain the sample aliquot from the cooler holding the samples.

9.1.2. Remove approximately 1.5 g of soil from the sample bag and place in a 4- × 4-in. plastic weigh boat.

9.1.3. Place the sample (in the weigh boat) under a heat lamp to remove any excess moisture that may remain. Dry until the soil seems friable.

9.1.4 If the sample consists of large chunks of soil and aggregate, place it in the mortar and pulverize it until the soil particles are a uniform size.

9.1.5. Write the sample number on the bottom of the planchet.

9.1.6. Spray a light film of photo mount adhesive on the inside of the planchet for the soil to adhere to.

9.1.7. Weigh 1.0 g (±0.05g) of soil in the small (2- × 2-in.) weigh boat.

9.1.8. Transfer the 1.0 g of soil to the prepared planchet. Spread the soil around within the planchet to disperse it evenly in the sample container.

9.1.9. Let the adhesive dry for 1-2 min before covering the sample.

9.1.10. Obtain a 3.0-in. circle of 0.00025-in. Mylar to adhere to the top of the sample planchet.

9.1.11. Place the prepared planchet on the plastic sample holder jig. Center the mylar circle on the sample planchet. There should be some adhesive remaining on the rim of the planchet for the Mylar to attach to. If not, apply some glue stick around the rim.

9.1.12. Move the plastic centering tool down over the planchet to affix the sides of the mylar sheet to the planchet. This should provide adequate adhesion of the mylar to the planchet. The sample is now ready to count.

10. Operation of the Instrument

10.1. Loading the proportional counter.

10.1.1. Place the QC samples in the sample holder assemblies. The QC samples (9 alpha and 6 beta QC's), made from various activity levels of ^{241}Am and ^{137}Cs on soils, should equal approximately 10% of the total number of samples to be analyzed. These samples should be interspersed in the sample set to adequately characterize the samples. The exact QC sample used does not matter, as long as the appropriate information is logged on the sample sheet so that the activity of that QC can be examined later.

10.1.2. Load the samples and QCs in their sample holder assemblies, using the sample loading tool provided by Protean. Place the sample holding tube on this loading tool and then place the sample holder assemblies in the tube. After all the samples have been loaded, lift the sample holding tube off the loading tool.

10.1.3. Load the holding tube on the tube receiver closest to the operator. When loading the tube within this assembly, be careful not to jar the holding tube. Excess motion will cause the sample assemblies to fall out of the holding tube inside the instrument. If this occurs, see the Mobile Radiological Analysis Van manager.

10.1.4. Record the sample position, number, type, and weight, along with other associated information on the alpha/beta sample sheet (Fig. 1).

10.2. Sample counting.

10.2.1. Sign onto the Protean instrument with the appropriate user password. This will bring up the initial software layout.

10.2.2. Depress the **COUNT** key.

10.2.2.1. This will bring up the **Acquisition Selection Menu**. Select the **Menu Selected Batch** mode. This selection is used for general counting of samples for routine gross alpha/beta counting. This will bring up one selection only, **RADVAN*GROSS/A/B**.

10.2.3. This selection will lead into the following sequence:

10.2.3.1. **Preparing Sample Changer**

10.2.3.2. **Load Magazine 1 and Press ENTER**

10.2.4. After loading the sample tube holder, depress the **ENTER** key. This will give a **Clearing Sample Buffer** message, followed by display of a field of data that the user can examine and change, if necessary. At this point, the user can either use the default values in the block or define the specific information needed for the system. Since this procedure is using an efficiency based on one point, there is no need to elaborate on the information within the block. To use the default information, press the **ENTER** key. This will initiate the next sequence:

10.2.4.1. **Accessing Sample Number 01**

10.2.4.2. **Low Gas Flow to Good Gas Flow**

10.2.4.3. **Good Gas Flow, Purging Detector, Seconds Remaining XXX**

10.2.5. The system has begun to count the samples and will print out the first data after the sample count has completed.

11. Calculations

11.1. Since the efficiency factor is calculated within the software of the Protean Instrument, the external algorithm simply converts the activity from disintegrations per minute to pCi, per sample units. In this case, the sample unit is gram per sample, so the activity is expressed as pCi/g.

11.1.1. This conversion uses the following algorithm:

$$\left(\frac{SA}{2.22}\right) = \text{pCi/sample} \quad ,$$

where SA = sample activity in dis/min,
2.22 = conversion unit to Ci.
(In this case, the sample = 1 g, so the sample activity = pCi/g)

11.2. The Protean Instrument provides a report (Fig. 2). The data is transferred from the report to the alpha/beta sample sheet. The raw data is attached to this alpha/beta sample sheet, initialed, and stored in the alpha/beta sample analysis notebook.

11.3. The information from the alpha/beta sample sheet is entered into a "basic" program that will provide the final data analysis. The program is accessed by the following steps:

11.3.1. Unlock the keyboard on the Mobile Radiological Analysis Laboratory (MRAL) computer.

11.3.2. Type **RAD** to initiate the program.

11.3.3. The program will query the user for the number of samples to be run, the type of analysis that is requested, and sample activity (in dis/min) and associated uncertainty.

11.3.4. Type in the appropriate information as the program requests it. After one sample has been completed, the result and uncertainty will be displayed on the screen. A secondary file is also created that provides another hard copy of the same information. This file is called **ALPHA.DAT**, within the DOS file structure. This file can be printed using the standard print utility from the DOS level.

11.3.5. The information can then be transferred to the MRAL database for the final data report and archiving.

12. Proper Waste Disposal Practices

12.1. Solid waste.

12.1.1. Sample-contaminated waste.

12.1.1.1. Sample-contaminated waste includes plastic weigh boats, spatulas, used planchets, Mylar, syringes, centrifuge tubes, filter disks, and gloves. The waste is accumulated in a plastic bag on a daily basis, sealed, and placed within a 1- × 2- × 2-ft cardboard box kept within the van.

12.1.1.2. The box is labeled as compactible waste. The box is opened only for the period of time necessary to add waste.

12.1.1.3. When the box is full, it is sealed with tape, removed from the mobile lab, and returned to TA-59. A new box is prepared (tape the end of the box and line with a new plastic bag) and placed in the mobile lab.

12.1.1.4. The box is stored at TA-59 until the remainder of the analytical results characterizing the waste are obtained.

12.1.1.5. Once the above process is complete, the Waste Disposal Group (EM-7) is notified and waste disposal procedure is initiated.

12.1.2. Sample waste.

12.1.2.1. The sample waste is the sample after the counting process has been completed. This includes the 100-g sample from the NaI(Tl) counter, the 1-g sample from the gross alpha/beta instrument, the 15 g from the extraction for tritium analysis, and the 5-g sample for the soil moisture analysis.

12.1.2.2. The waste is accumulated on a daily basis and placed within a smaller bag. This bag is then sealed and appropriately marked with the date the waste was accumulated and the sample range within the bag (this is for later sample retrieval, if necessary).

12.1.2.3. The box is labeled as compactible waste. The box is opened only for the period of time necessary to add waste.

12.1.2.4. When the box is full, it is sealed with tape, removed from the mobile lab, and returned to TA-59. A new box is prepared (tape the end of the box and line with a new plastic bag) and placed in the mobile lab.

12.1.2.5. The box is stored at TA-59 until the remainder of the analytical results characterizing the waste are obtained.

12.1.2.6. Once the above process is complete, the Waste Disposal Group (EM-7) is notified and waste disposal procedure is initiated.

12.2. Liquid waste.

12.2.1. Liquid waste is generated from the process of liquid scintillation analysis. After the samples have been counted, the samples are returned to EM-9 at TA-59, and accumulated with the routine tritium analysis sample vials.

12.3. Waste pickup.

12.3.1. The surface exposure rate of the sealed box is determined by a radiation protection technician and is recorded on the Radioactive Solid Waste Disposal (RSWD) Record form.

12.3.2. Pickup by the Waste Management group of the full boxes of waste is requested using the current Chemical Waste Disposal Request (CWDR) form. The current Waste Profile form

(WPRF) that describes the waste is referenced on both disposal request forms.

12.3.3. The Waste Management Group picks up the waste for disposal according to Laboratory policy.

13. Source Materials

13.1. Instruction Manual for the IPC 9025 Low Level Alpha/Beta Counting Instrument, IPC-9025-1.1, Protean Instrument Corporation, P.O. Box 910, Oak Ridge, TN (1991).

13.2. Environmental Protection Agency, "Tentative Reference Method for the Measurement of Gross Alpha and Gross Beta Radioactivities in Environmental Waters," Quality Assurance Branch, Technical Support Laboratory, National Environmental Research Center, Las Vegas, NV, ROAP Number 22 ACW, EPA-680/4-75-005 (1975).

13.3. EML Procedures Manual, 26th ed., H. L. Volchock and G. de Planque, Eds., Environmental Measurements Laboratory, U.S. Department of Energy, New York, NY, HASL-300 (1986).

13.4. G. Brooks, "Data Reduction Program for the MRAL," in progress, Environmental Chemistry Group, Los Alamos National Laboratory (1992).

13.5. "Low-Level Radioactive Solid Waste," Administrative Requirement 10-2, in *Environment, Safety, and Health Manual*, Los Alamos National Laboratory Manual, Chapter 1 (most recent edition).

13.6. "Chemical, Hazardous, and Mixed Waste," Administrative Requirement 10-3, in *Environment, Safety, and Health Manual*, Los Alamos National Laboratory Manual, Chapter 1 (most recent edition).

EM-9 Gross Alpha/Beta Sample Sheet

Date:_____ Analyst:_____

RN:_____

Pos	Samp Num	Analysis	Result	Unc.
		Alpha		
		Beta		
		Alpha		
		Beta		
		Alpha		
		Beta		
		Alpha		
		Beta		
		Alpha		
		Beta		
		Alpha		
		Beta		

Figure 1.

```
RADVAN*GROSS/A/B          MOBILE-RAD-VAN        B. LOCKHART   α 3124.2 ± 790.8
ID: 00000000    07-27-92    11:41:44          α QC 1-1        β LMDA
Net Wt mg:    1.00  sd:    0.00
  : 001  Repeat: 00    BG TIME (min):    5.00    SAMPLE TIME (min):    5.00
 pha to Beta cpm:  60.05  sd:   5.28
---:- COUNTS -:--- CPM ---:-BG CPM-:- NET CPM -:- %EFF-:--- DPM ---:- LLD dpm-
 A :       561 :    112.20 :    1.00 :    111.20 : 1.60 :   6935.70 :    129.78
sd :     23.69 :      4.74 :    0.47 :      4.76 : 0.40 :   1753.64 :
 B :       215 :     43.00 :   14.60 :    -31.65 : 18.60 :   -170.15 :     42.75
sd :     14.66 :      2.93 :    2.48 :      6.53 : 2.50 :     41.91 :
```

```
RADVAN*GROSS/A/B          MOBILE-RAD-VAN        B. LOCKHART   α 123.6 ± 44.5
ID: 00000000    07-27-92    11:48:45          β std #6        β 2592.3 ± 350.3
Net Wt mg:    1.00  sd:    0.00
SN: 002  Repeat: 00    BG TIME (min):    5.00    SAMPLE TIME (min):    5.00
Alpha to Beta cpm:    2.38  sd:    0.64
---:- COUNTS -:--- CPM ---:-BG CPM-:- NET CPM -:- %EFF-:--- DPM ---:- LLD dpm-
 A :        27 :      5.40 :    1.00 :      4.40 : 1.60 :    274.43 :    129.78
sd :      5.20 :      1.04 :    0.47 :      1.14 : 0.40 :     98.76 :
 B :      5437 :   1087.40 :   14.60 :   1070.42 : 18.60 :   5754.97 :     42.75
sd :     73.74 :     14.75 :    2.48 :     14.97 : 2.50 :    777.69 :
```

```
RADVAN*GROSS/A/B          MOBILE-RAD-VAN        B. LOCKHART
ID: 00000000    07-27-92    12:12:13          1317            LMDA
Net Wt mg:    1.00  sd:    0.00
  : 001  Repeat: 00    BG TIME (min):    5.00    SAMPLE TIME (min):    5.00
 pha to Beta cpm:    0.00  sd:    0.00
---:- COUNTS -:--- CPM ---:-BG CPM-:- NET CPM -:- %EFF-:--- DPM ---:- LLD dpm-
 A :         2 :      0.40 :    1.00 :     -0.60 : 1.60 :    -37.42 :    129.78
sd :      1.41 :      0.28 :    0.47 :      0.55 : 0.40 :     35.54 :
 B :        64 :     12.80 :   14.60 :     -1.80 : 18.60 :    -9.68 :     42.75
sd :      8.00 :      1.60 :    2.48 :      2.95 : 2.50 :     15.93 :
```

```
RADVAN*GROSS/A/B          MOBILE-RAD-VAN        B. LOCKHART
ID: 00000000    07-27-92    12:19:15          1318            LMDA
Net Wt mg:    1.00  sd:    0.00
SN: 002  Repeat: 00    BG TIME (min):    5.00    SAMPLE TIME (min):    5.00
Alpha to Beta cpm:    0.00  sd:    0.00
---:- COUNTS -:--- CPM ---:-BG CPM-:- NET CPM -:- %EFF-:--- DPM ---:- LLD dpm-
 A :         1 :      0.20 :    1.00 :     -0.80 : 1.60 :    -49.90 :    129.78
sd :      1.00 :      0.20 :    0.47 :      0.51 : 0.40 :     34.28 :
 B :        28 :      5.60 :   14.60 :     -9.00 : 18.60 :   -48.39 :     42.75
sd :      2.29 :      1.06 :    2.48 :      2.70 : 2.50 :     15.90 :
```

```
RADVAN*GROSS/A/B          MOBILE-RAD-VAN        B. LOCKHART
ID: 00000000    07-27-92    12:26:18          1319            LMDA
Net Wt mg:    1.00  sd:    0.00
SN: 003  Repeat: 00    BG TIME (min):    5.00    SAMPLE TIME (min):    5.00
Alpha to Beta cpm:    0.00  sd:    0.00
  :- COUNTS -:--- CPM ---:-BG CPM-:- NET CPM -:- %EFF-:--- DPM ---:- LLD dpm-
 A :         2 :      0.40 :    1.00 :     -0.60 : 1.60 :    -37.42 :    129.78
sd :      1.41 :      0.28 :    0.47 :      0.55 : 0.40 :     35.54 :
 B :        [illegible] : [illegible] : [illegible] : [illegible] : [illegible] : [illegible] : [illegible]
```

Figure 2. Example of Report from Protean Instrument

GROSS GAMMA SCREENING OF SILICATES IN A MOBILE RADIOLOGICAL LABORATORY

Analyte: All gamma-emitting nuclides	**Method No.:** MLR200
Matrix: Silicates	**Minimum Detectable Activity:** Silicates: 4.0 pCi/g
Procedure: Instrumental gamma-ray (NaI) counting	**Accuracy and Precision:** Soils: 97.7 ± 3.0 %
Effective Date: 05/12/92	**Author:** George Brooks

SAFETY NOTE: Before beginning this procedure, read all of the Material Safety Data Sheets for the chemicals listed in Sec. 7. Read Sec. 4.3 of the EM-9 Safety Manual for information on personal protective clothing and equipment. Read Sec. 13 of this procedure and Source Material 14.4 and 14.5 for proper waste disposal practices.

1. Principle of Method

1.1. Samples are packaged in 500-mL (16-oz) Nalgene HDPE plastic bottles and are counted in a NaI(Tl) well scintillation counting system for 5 min. This procedure is completed without chemical processing.

1.2. The sample size for silicates is 100 g.

2. Sensitivity

2.1. The limits of detection for silicates in this system is 4.0 pCi/g, based on the 662-keV ^{137}Cs energy line and a 5-min count.

3. Accuracy and Precision

3.1. This method is intended as a qualitative assessment of gross gamma activity. The accuracy and precision have been assessed using ^{137}Cs (NIST SRM 4233B) quality assurance samples. The following represents the accuracy and precision of the NaI(Tl) counting system used to count these samples:

Silicate Samples:
Gamma = 97.7 ± 3.0 % (N = 86)

3.2. Samples showing a positive response (usually 3 sigma above background is indicative of a positive signal) should be submitted to further analysis to determine the exact source of the elevated activity.

4. Interferences

4.1. Although the method is intended to measure the gamma-emitting isotopes in the sample, the wall thickness of the detector and the detector housing assembly is such that high-energy beta particles will also be counted.

5. Collection and Storage of Samples

5.1. There are no special collection and storage requirements for these types of samples.

6. Apparatus

6.1. Bicron Model No. 5MW7Q/5, 5- × 7-in. NaI(Tl) well-type scintillation detector. The well dimensions are 3.0 in. diameter by 5.5 in. depth. The system is set in the "NORMAL" window mode, with an active energy range of 0.2 to 2.5 MeV.

6.2. Photomultiplier tube base with preamplifier: EG&G Ortec Model 276.

6.3. Amplifier: EG&G Ortec Model No. 572 amplifier.

6.4. Single-channel analyzer (SCA): EG&G Ortec Model No. 550A.

6.5. Counter/timer: EG&G Ortec Model 776 counter/timer.

6.6. Printer: EG&G Ortec Model No. 777A line printer.

6.7. High voltage power supply: EG&G Ortec Model No. 556.

6.8. Standard NIM rack assembly with ±12 and 24 V.

6.9. Bottles: 500-mL, HDPE polyethylene, Nalgene, catalog no. 20002-0116.

6.10. Analytical balance: 300-g minimum capacity.

6.11. Bags: clear, low-density, polyethylene bags (0.002 in. thick) sized to fit 500-mL bottles. The bags protect the detector from surface contamination on the bottles.

6.12. Spatula and permanent ink marker.

6.13 Funnel: polyethylene.

7. Reagents

7.1. No reagents are required for this procedure.

8. Calibration and Standards

8.1. Prepare all standards and quality assurance materials from a NBS SRM 4233-B ^{137}Cs solution.

8.1.2. Standards.

8.1.2.1. Prepare the soil standard by overspiking a known aliquot of the stock standard solution on 100 g of blank soil in the sample bottle and evaporating under an infrared heat lamp. The solution must not come in contact with the walls or bottom of the container when preparing the overspike.

8.1.2.2. Thoroughly blend the dry standard and cap the bottle. Additional mixing may be provided by gently shaking the sealed bottle.

8.1.2.3. Mark the bottle with the appropriate information: isotope, activity level, SRM used, date prepared, preparer, notebook number, etc. Mark the bottle with tape denoting that it is a radioactive material.

8.1.3. Quality Control Materials (open).

8.1.3.1. Prepare quality control (QC) materials in 3 activity levels. Repeat steps outlined in section 8.1.2.1 and 8.1.2.2. To create 3 levels of activity, adjust the amount of standard added to each soil blank.

8.1.3.2. Repeat Step 8.1.2.3.

8.1.4. Blank.

8.1.4.1. Prepare a blank soil sample by treating 100 g of dried, "clean" soil, as outlined in Step 8.1.2.2 and 8.1.2.3.

9. Procedure

9.1. Weigh 100 g of a dried soil sample into the 500-mL polyethylene bottle.

9.2. Tightly cap the bottle and clean off any exterior contamination.

9.3. Place the sample in a plastic bag.

9.4. Because the detector efficiency and background are to be determined for each run, triplicate standards and blanks should be counted with each sample set.

9.4.1. Place the standard in a plastic bag and insert it into the well counter.

9.4.2. Count the standard three times for 5 min each count. Multiple counting of the sample provides adequate counting statistics. Record each count on the NaI(Tl) Counting Log Sheet (see Fig. 1).

9.4.3. Remove the standard and insert the soil blank into the well. Count the blank soil three times for 5 min each count. Record each count on the log sheet.

9.5. Place the sample in the well counter.

9.6. Count the sample for 5 min.

9.7. Record the counts, sample number, weight of sample, date counted, and any other distinguishing information on the NaI(Tl) counting log sheet.

9.8. Count a quality-control sample at the end of each set. Count a number of QCs equal to 10% of the total number of samples that will be counted. Record this information on the sample counting log sheet.

10. Operation of the Instrument

10.1. Turn on the voltage to the NIM bin.

10.2. Turn on the high-voltage supply for the NaI(Tl) detector, usually at 1000 volts, positive. The readout on the HV supply will read **1.0**.

10.3 Check that the timer/counter is set properly. The thumbwheel for the timer should read **5 0**; the time increment is already set at 1.0 min intervals by a jumper inside the unit. The dwell time knob should be **off**, the timer/counter switch should be at **Count (A)**, and the discriminator potentiometer should be at **0.2 V**.

10.4. The line printer should be switched on, and the cycle switch should be at **ONE CYCLE**.

10.5. To initiate the counter, proceed with the following:

10.5.1. Depress the **STOP** button to complete any counting cycle that may be in progress.

10.5.2. Depress the **RESET** button to reset the counter to the first part of the counting cycle.

10.5.3. Depress the **COUNT** button to start the counting sequence.

10.6. After the count has been completed, the line printer will print the time of the count and the total counts for that sample. The display on the timer/counter will also display this information.

10.7. Record this information on the NaI(Tl) counting log sheet.

10.8. If any of the operations above produce suspicious results, or none at all, contact the Rad Van manager immediately.

11. Calculations

11.1. Since the efficiency factor is calculated for each sample set, the values obtained from counting the standard and blanks are used to determine the efficiency of the counting system for that sample set.

11.2. Determine the mean value of the triplicate counts of the standard and the soil blank. Record these values on the bottom of the counting log sheet.

11.3. The following equations are embedded within the BASIC program. This program provides the user with the vehicle by which all the final data reduction processes are accomplished. The actual steps to needed for the final data reduction process are discussed in Section 12, Data Reduction.

11.4 Counting efficiency.

11.4.1. The mean counting efficiency of the counter for a standard run is calculated using the following equation:

$$\overline{E} = \frac{\left(\frac{\overline{C_s}}{T_s} - \overline{B}\right)}{A_s} ,$$

where $\overline{E}$ = mean efficiency,
$\overline{C_s}$ = mean (n = 3) gross counts of the standard,
T_s = count time for the standard (min),
$\overline{B}$ = mean background count rate (counts/min), and
A_s = activity of the standard (dis/min).

11.5. Background.

11.5.1. The mean background count rate is calculated as follows:

$$\overline{B} = \frac{C_B}{T_B} \quad ,$$

where B = mean background count rate (counts/min),
C_b = mean gross counts of the soil background, and
T_s = count time of the soil background (min).

11.6. Sample activity.

11.6.1. The activity of the samples is calculated using the following formula:

$$A_X = \left(\frac{\left(\frac{C_X}{T_X} - \overline{B} \right)}{\overline{E}} \right) \times 2.22 \quad ,$$

where A_x = sample activity,
C_x = gross counts of the sample,
T_x = count time of the sample (min),
$\overline{B}$ = mean background count rate (counts/min),
$\overline{E}$ = mean efficiency, and
2.22 = conversion factor.

11.7. Sample uncertainty.

11.7.1. The uncertainty associated with the sample activity is calculated using the following equation:

$$SD\ (A_x) = |A_x| \times \sqrt{\frac{\frac{C_x}{T_x^2}}{\left(\frac{C_x}{T_x} - \overline{B} \right)^2}} \quad ,$$

where $SD\ (A_x)$ = uncertainty of the sample activity in pCi,
$|A_X|$ = absolute value of A_x from Step 11.5.1,
C_x = gross counts of the sample,
T_x = sample count time (min), and
$\overline{B}$ = background count rate (counts/min).

12. Data Reduction

12.1. The raw data logged into the NaI(Tl) counting log sheet is now ready to be entered into the system for the final data reduction process. The program is accessed by the following steps:

12.1.1. Unlock the keyboard of the MRAL computer.

12.1.2. Type **RAD** to initiate the program.

12.1.3. The program will query the user for the number of samples to be run, the type of analysis requested, the mean gross counts for the standard, the mean gross counts for the sample blank, and then the gross counts associated with the sample itself.

12.1.4. Type in the appropriate information as the program requests it. After the first sample result has been calculated, the result and uncertainty will be displayed on the screen. A secondary ASCII file is created that can provide a hardcopy of the data, or the data can be uploaded directly into EM-9's database. This file is called **GAMMA.DAT**, within the DOS file structure. This file can be printed using the standard print utility from the DOS level.

12.1.5. The information is then transferred to the MRAL database for final data reporting and archiving.

12.1.6. The final report is signed and dated by the analyst and then placed in the **GROSS GAMMA** logbook. Copies are sent with the aliquoted samples to provide the necessary radiological screening information requested by the sample receiving section.

12.1.7. The final data must then be transferred into the EM-9 database for final data storage and record archiving.

13. Proper Waste Disposal Practices

13.1. Solid waste.

13.1.1. Sample-contaminated waste.

13.1.1.1. Sample-contaminated waste includes plastic weigh boats, spatulas, used planchets, Mylar, syringes, centrifuge tubes, filter disks, and gloves. The waste is accumulated in a plastic bag on a daily basis, sealed, and placed within a 1- × 2- × 2-ft cardboard box kept within the van.

13.1.1.2. The box is labeled as compactible waste. The box is opened only for the period of time necessary to add waste.

13.1.1.3. When the box is full, it is sealed with tape, removed from the mobile lab, and returned to TA-59. A new box is prepared (tape the end of the box and line with a new plastic bag) and placed in the mobile lab.

13.1.1.4. The box is stored at TA-59 until the remainder of the analytical results characterizing the waste are obtained.

13.1.1.5. Once the above process is complete, the Waste Disposal Group (EM-7) is notified and waste disposal procedure is initiated.

13.1.2. Sample waste.

13.1.2.1. The sample waste is the sample after the counting process has been completed. This includes the 100-g sample from the NaI(Tl) counter, the 1-g sample from the gross alpha/beta instrument, the 15 g from the extraction for tritium analysis, and the 5-g sample for the soil moisture analysis.

13.1.2.2. The waste is accumulated on a daily basis and placed within a smaller bag. This bag is then sealed and appropriately marked with the date the waste was accumulated and the sample range within the bag (this is for later sample retrieval, if necessary).

13.1.2.3. The box is labeled as compactible waste. The box is opened only for the period of time necessary to add waste.

13.1.2.4. When the box is full, it is sealed with tape, removed from the mobile lab, and returned to TA-59. A new box is prepared (tape the end of the box and line with a new plastic bag) and placed in the mobile lab.

13.1.2.5. The box is stored at TA-59 until the remainder of the analytical results characterizing the waste are obtained.

13.1.2.6. Once the above process is complete, the Waste Disposal Group (EM-7) is notified and waste disposal procedure is initiated.

13.2. Liquid waste.

13.2.1. Liquid waste is generated from the process of liquid scintillation analysis. After the samples have been counted, the samples are returned to EM-9 at TA-59, and accumulated with the routine tritium analysis sample vials.

13.3. Waste pickup.

13.3.1. The surface exposure rate of the sealed box is determined by a radiation protection technician and is recorded on the Radioactive Solid Waste Disposal (RSWD) Record form.

13.3.2. Pickup by the Waste Management group of the full boxes of waste is requested using the current Chemical Waste Disposal Request (CWDR) form. The current Waste Profile form (WPRF) that describes the waste is referenced on both disposal request forms.

13.3.3. The Waste Management Group picks up the waste for disposal according to Laboratory policy.

14. Source Materials

14.1. Procedure no. ER150, "Gross Gamma in Environmental Matrices," *Health and Environmental Chemistry: Analytical Techniques, Data Management, and Quality Assurance*, M. A. Gautier, Ed., Los Alamos National Laboratory Manual LA-10300-M, Vol. I (1987).

14.2. EML Procedures Manual, 26th ed., H.L. Volchock and G. de Planque, Eds., Environmental Measurements Laboratory, U.S. Department of Energy, New York, HASL-300 (1986).

14.3. G. Brooks, "Data Reduction Program for the MRAL," in progress, Environmental Chemistry Group, EM-9, Los Alamos National Laboratory, (1992).

14.4. "Low-Level Radioactive Solid Waste," Administrative Requirement 10-2, in *Environment, Safety, and Health Manual*, Los Alamos National Laboratory Manual, Chapter 1 (most recent edition).

14.5. "Chemical, Hazardous, and Mixed Waste," Administrative Requirement 10-3, in *Environment, Safety, and Health Manual*, Los Alamos National Laboratory Manual, Chapter 1 (most recent edition).

NaI(TI) Counting Log Sheet

Sample Set TP-2.1 (Rad Tem)
Count Time 5 min
ROI's
Sample Owner
Date 7/30/92

Sample	Vol/Wt	Counts	D/M	Comments
Soil Blk		35803		
"		35822	35725	
"		35551		
Std#2		155808		
		156094	155702	
		155203		
1399		34761		LMDA
1400		35054		"
1401		35115		"
1402		35113		"
1403		34957		"
1404		35260		"
1405		35519		"
1406		35310		"
1408		35681		"
1409		35434		"
1410		38413		LMDA 8.1 ± 0.5
1413		37985		5.8 ± 0.4
Soil Blk		38893		
		38743		
		37888		
1414		35604		LMDA
1415		36125		"
1416		36253		"
1417		35397		"
1418		35676		"
1419		35622		"
1420		35884		"

Figure 1. Gross Gamma Log Sheet

GROSS TRITIUM ANALYSIS OF SILICATES IN A MOBILE RADIOLOGICAL LABORATORY

Analyte: Tritium (^3H)	**Method No.:** MLR300
Matrix: Silicates	**Minimum Detectable Activity:** Silicates: 1.0 pCi/g
Procedure: Liquid scintillation analysis	**Accuracy and Precision:** Silicates: 93 ± 16%
Effective Date: 06/22/92	**Author:** George Brooks

SAFETY NOTE: Before beginning this procedure, read all of the Material Safety Data Sheets for the chemicals listed in Sec. 7. Read Sec. 4.3 of the EM-9 Safety Manual for information on personal protective clothing and equipment. Read Sec. 12 of this procedure and Source Material 13.4 and 13.5 for proper waste disposal practices

1.Principle of Method

1.1. Silicate samples are mixed with 15 mL of deionized water. The sample is shaken, a 5-mL aliquot of the sample extract is taken, immersed in a liquid scintillation cocktail, and counted.

1.2. The silicate sample extracts are counted in a low-level liquid scintillation counting system for 5 min. The sample size is 15 g of soil.

2. Sensitivity

2.1. The sensitivity will vary as a result of color quenching that may be taking place within the sample. This is a direct result of the inefficiency of the filter to exclude the media causing the quenching. The sensitivity may also be limited by the range of the counter background. In general, the detection limit for this system is approximately 1.0 pCi/g, based on a 15-g soil sample, a 2-minute shakeout, spin-out in a centrifuge (until sample is clear), and immersion in 15 mL of Ultima Gold liquid scintillation cocktail.

3. Accuracy and Precision

3.1. This method is intended as a preliminary step in the analysis of silicates samples submitted to a field laboratory. It does not supersede fixed-base laboratory distillation methods.

3.2. The following accuracy and precision measurements were derived from soil overspikes using two NIST ^3H SRMs, No. 4361B-57 and No. 4926D-51:

Silicate samples: Tritium = 93.0 ± 16.0% (N = 12)

4. Interferences

4.1. Any sample that contains some form of chemical quenching agent that can be carried through filtration will experience count quench.

4.2. Other nuclides with low-energy beta emission similar to ^{3}H can cause false positive results.

4.3. It must be assumed that the sample contains ^{3}H in the form of HTO and that all the unbound fraction of ^{3}H has been extracted.

5. Collection and Storage of Samples

5.1. There are no special collection and storage requirements for these types of samples.

6. Apparatus

6.1. Low-level liquid scintillation counting system: Packard Instrument Corporation Model 2500 TR with refrigeration option.

6.2. Liquid scintillation vials: Wheaton model no. 66021-690, 25-mL capacity, plastic.

6.3. 50-mL centrifuge tube: clear polypropylene, Corning model no. 21008-74.

6.4. Syringe: 10 cc, model no. BD-1604.

6.5 Filter disk: 5-μm, Gelman Acrodisc model no. 28144-095.

6.6. Safety bottle: 4-liter, plastic coated with 15-mL automatic pipette dispenser.

6.7. Automatic 15-mL pipette dispenser: to fit the liquid scintillation cocktail bottle.

6.8. Analytical balance: 300-g minimum capacity.

6.9. Pipette: 100-1000-μL Eppendorf micropipette.

6.10. Pipette: 5-mL adjustable macropipette.

6.11. Pipette tips: 101-1000-μL Eppendorf pipette tips, model no. 53511-880.

6.12. Pipette tips: 1-5-mL polypropylene, model no. 53503-826.

6.13. Spatula and permanent ink marker.

6.14. Funnel: polypropylene.

7. Reagents

7.1. Liquid scintillation cocktail: Ultima Gold (Packard Instrument Company Inc., Catalog No. 6013324, VWR Scientific) or similar commercial product. Evaluate each new lot number to assure reproducibility of results.

7.2. Low-background water: obtain from a water source free of radionuclide contamination (deep well water from well no. PM-1 can be obtained from EM-8).

8. Calibration and Standards

8.1. Quench curves.

8.1.1. In order to properly characterize and quantitate a sample, a quench curve must be established. This curve provides information (efficiency versus quench within the sample, expressed as some variable specific to the instrument; i.e., tSIE factor for Packard) to the instrument that can accurately correct for quench occurring in the samples due to chemical or color quench. This quench curve then must represent as closely as possible the actual samples that are analyzed. This requires that each quench curve must be specific to the sample to be counted: (1) the sample-to-cocktail ratio (i.e., 5 mL of sample to 15 mL of cocktail), (2) the specific manufacturer of the cocktail, and (3) the specific matrix that is to be analyzed (soil, water, etc.).

8.1.1.1. Generate a set of quench standards. Place 15 mL of the Ultima Gold cocktail in each of 10 liquid scintillation vials. Mark the top of each vial with a permanent marker for identification. Record this information in the appropriate notebook.

8.1.1.2. Obtain a ^{3}H (NIST SRM 4926D) standard having a suitable activity level (100,000 dis/min per vial is adequate). A volume of 700 μL in each vial provides an activity level close to the 100,000 dis/min in each sample.

8.1.1.3. Make a solution that can provide adequate quench in the samples. Mix 5 mL of NaI in 40 mL of deionized water. Shake the solution until all the salt has dissolved.

8.1.1.4. The purpose is to provide a series of samples with the same amount of standard in each sample while varying the amount of quench agent. This requires 10 separate and varied additions of these quench standards. The following quench amounts are adequate with the above-mentioned sample configurations: 0, 10, 50, 100, 250, 500, 800, 1000, 2000, and 3500 μL.

8.1.1.5. The samples must now be normalized to the total 20-mL sample volume. This requires the addition of the following amounts of "clean" deionized water to each of the samples, respectively: 4300, 4290, 4250, 4200, 4050, 3800, 3500, 3300, 2300, and 800 μL.

8.1.1.6. After all additions to each sample are complete, shake each sample vigorously to mix. At first the sample will appear cloudy, but it should become clear.

8.1.1.7. Place the quench standards into the sample holder trays in the liquid scintillation analyzer. Allow the samples to cool for at least 20-30 min before counting.

8.1.1.8. Set up the protocol number that will be used to count the quench standards. The protocol number allows the user to define the count times, the name of the protocol, the exact range to be analyzed, etc. For more information on setting up the appropriate quench curve information, see chapter 7 in the operations manual for the Packard 2500 TR.

8.1.1.9. After the samples have been counted, the program processes the information and produces a quench curve. In some instances, the curve is not curvilinear because of irregularities in some of the quench standards. This requires that some of the standards (counts) be removed from the protocol information file (see chapter 7 in the 2500 TR operations manual). The program will replot the standards with the new data configuration. The data should provide a plot such as Fig. 1.

8.1.1.10. This file is then addressed in other counting protocols as the quench curve to use for this particular sample configuration.

8.1.1.11. The quench curves should be regenerated every year to compensate for system degradation, new batches of liquid scintillation cocktail, or other conditions that could alter the counting process.

8.2. Open quality assurance standards.

8.2.1. In order to provide high-quality data, appropriate quality control (QC) materials should be run with each sample set. This provides the analyst and the end user with a high degree of confidence in the data. Two types of quality control samples can be run through the system, soil overspike QCs and system QCs.

8.2.1.1. Soil overspike QCs.

8.2.1.1.1. Place 15 g of "clean" soil in the 50-mL centrifuge tube.

8.2.1.1.2. Add a known amount of tracer to the sample matrix. Use either NIST SRM 4361B or 4926D as the QC material. Calculate the amount of activity that should be in the sample.

8.2.1.1.3. Add 15 mL of "clean" water to the sample and overspike matrix. Cover the sample.

8.2.1.1.4. Shake the sample for 2 min.

8.2.1.1.5. Let the sample stand for 2-4 min to allow the water and soil to separate.

8.2.1.1.6. Attach a 5-μm filter to the end of a syringe. Immerse the end of the filter in the sample extract.

8.2.1.1.7. Pull 5 mL of solution through the filter into the syringe.

8.2.1.1.8. Remove the filter from the syringe and dispense the 5 mL of extract into 15 mL of liquid scintillation cocktail.

8.2.1.1.9. Shake the sample until it is no longer cloudy. Mark on the top of the sample container the amount of spike added to the soil sample. Use this as a reference number for this QC.

8.2.1.1.10. Count the QC sample with the other samples. Examine the data to determine the ratio of the measured to actual activity levels in the QC sample.

8.2.1.1.11. If the ratio is 80-120%, the data can accepted as valid. If the ratio is outside that range, contact the Mobile Radiological Analysis Laboratory (MRAL) manager to correct the problem.

8.2.2.1. System QCs.

8.2.2.1.1. Prepare 10 samples for quality assurance standards. Place 15 mL of Ultima Gold cocktail in each sample vial.

8.2.2.1.2. Add varying but known amounts of ^{3}H standard to each sample. Normalize each sample to a total volume of 20 mL (this may require that "clean" water be used to normalize the volume). Use NIST SRMs 4361B or 4926D. Try to develop a activity range between 100 and 3000 dis/min per sample.

8.2.2.1.3. Mark each sample with a unique number and record the number and its calculated activity in the appropriate notebook. This series will be used for long-term quality assurance for the sample sets.

8.2.2.1.4. Place the system QCs in a sample cassette and place in the instrument. Keep the samples in the instrument to maintain a constant temperature. This allows rapid determination of the sample activity with any sample set.

8.3. Weekly calibrations.

8.3.1. In order to maintain accurate instrument performance assessment records, known standards will be run through the system each week. These standards consist of a ^{14}C unquenched standard, a ^{3}H unquenched standard, and an unquenched background sample. These samples are loaded into a special sample cassette marked for IPA ASSESSMENT in the order mentioned. Various statistical parameters are examined (chi-square, figure of merit, standard efficiency, and backgrounds) and plotted within the instrument's software programs. This information should be examined weekly to determine if any trends are occurring in the instrument. If further information is needed, refer to chapter 10 in the 2500TR operations manual. If other problems are found, contact the MRAL manager immediately.

9. Procedure

9.1 Silicates.

9.1.1. Obtain the sample aliquot from the cooler holding the samples. This cooler is the sample holder the ER sampling team delivers to the MRAL van daily.

9.1.2. Determine the total number of samples to be analyzed for ^3H. Remove the appropriate number of liquid scintillation vials and centrifuge tubes.

9.1.3. Mark each scintillation vial and centrifuge tube with the correct sample number, using a permanent marker.

9.1.4. Place 15 mL of the Ultima Gold cocktail in each sample vial.

9.1.5. Weigh out 15 g of each sample in the appropriately marked centrifuge tube.

9.1.6. Add 15 mL of "clean" water to each sample. Use the 4-L bottle with the automated pipettor for the "clean" water.

9.1.7. Shake each sample for 2 min to allow for the transfer of unbound ^3H from the soil to the water carrier.

9.1.8. Allow each sample to stand for approximately 2-4 min. This should allow the sediments to separate from the water extract and minimize the amount of possible quench agent pulled through to the sample. If this does not provide a clear sample, centrifuge the tubes until the solution is no longer cloudy (2-20 min).

9.1.9. Place a 5-μm filter on the end of a 10-mL syringe.

9.1.10. Place the end of the filter in the 15 mL of water extract in the centrifuge tube. Pull 5 mL of sample through the filter into the syringe. The sample should be fairly clean. If not, flush the sample back into the centrifuge tube, replace the filter, and pull another sample.

9.1.11. Remove the filter from the syringe and place it in the appropriate disposal container.

9.1.12. Introduce the sample from the syringe into the appropriately marked liquid scintillation vial. Replace the top and secure the lid.

9.1.13. Shake the vial to promote homogeneity within the sample. The sample should change from cloudy to clear within a few seconds. If it remains

cloudy, the sample condition is inappropriate for counting and may need to be redone.

10. Operation of the Instrument

10.1. Preparation of samples for counting.

10.1.1. Place the samples in the sample cassette holders. Place the protocol ID marker, number 2, on the front of the sample cassette holder. Make sure that the magnetic bar on the protocol ID marker is pushed to the left position. This cues the instrument that this sample set is ready to be counted.

10.1.2. Make sure that the necessary number of QC samples (both soil overspikes and system QCs) are in place with the sample set. A 1:10 ratio of QCs to samples is reasonable.

10.1.3. Keep the samples within the instrument for at least 15-20 min to allow photoluminescence in the sample to subside.

10.2. Sample counting.

10.2.1. When the samples are ready to count, depress the **green** button on the upper right-hand corner of the system keyboard. This causes the system to rotate the cassette holders within the instrument to the next sample set ready to count.

10.2.2. After the counting sequence is complete, a printout will be available with all the appropriate information. This will include the sequence number, count time, count per minute, disintegrations per minute, activity and the associated error (3σ), and the tSIE (transformed spectral index of external standard).

10.2.3. In addition to this printout, an ASCII file should be generated. The creation of the this file will allow the user to take the data from the MRAL to the laboratory and upload it into the EM-9 database for storage and archival purposes. For further information on the initial setup of the data file format, consult chapter 9, Data Output, in the 2500TR operation manual.

11. Calculations

11.1. The liquid scintillation analyzer performs the necessary calculations internally to derive the proper activity and standard error calculations for each sample and generate a report (Fig. 2). The reporting algorithm in the instrument CPU provides for the correction that only 1/3 of the original sample was extracted.

It corrects to the original sample size of 15 g and reports the activity in pCi/g, ±3 σ.

11.2. The operator of the MRAL then transcribes the data from the LSC report for inclusion in the MRAL report. This algorithm corrects for soil moisture as calculated from the soil moisture analyzer. The report is then printed for final dissemination to the Sample Receiving section, the contract laboratory, the ER program office, and in-house users.

11.3. The report is a file generated in a WordPerfect (WP) file format. The typical naming convention for each file utilizes the day's date as the file name; i.e., 6_25_92.WP. The user can retrieve the file from the WP directory later.

11.4. The computing system has the necessary hardware to allow archiving of all the systems' files. Data integrity is maintained by use of an automated backup routine in place on the system.

12. Proper Waste Disposal Practices

12.1. Solid waste.

12.1.1. Sample-contaminated waste.

12.1.1.1. Sample-contaminated waste includes plastic weigh boats, spatulas, used planchets, Mylar, syringes, centrifuge tubes, filter disks, and gloves. The waste is accumulated in a plastic bag on a daily basis, sealed, and placed within a 1- × 2- × 2-ft cardboard box kept within the van.

12.1.1.2. The box is labeled as compactible waste. The box is opened only for the period of time necessary to add waste.

12.1.1.3. When the box is full, it is sealed with tape, removed from the mobile lab, and returned to TA-59. A new box is prepared (tape the end of the box and line with a new plastic bag) and placed in the mobile lab.

12.1.1.4. The box is stored at TA-59 until the remainder of the analytical results characterizing the waste are obtained.

12.1.1.5. Once the above process is complete, the Waste Disposal Group (EM-7) is notified and waste disposal procedure is initiated.

12.1.2. Sample waste.

12.1.2.1. The sample waste is the sample after the counting process has been completed. This includes the 100-g sample from the NaI(Tl) counter, the 1-g sample from the gross alpha/beta instrument, the 15 g from the extraction for tritium analysis, and the 5-g sample for the soil moisture analysis.

12.1.2.2. The waste is accumulated on a daily basis and placed within a smaller bag. This bag is then sealed and appropriately marked with the date the waste was accumulated and the sample range within the bag (this is for later sample retrieval, if necessary).

12.1.2.3. The box is labeled as compactible waste. The box is opened only for the period of time necessary to add waste.

12.1.2.4. When the box is full, it is sealed with tape, removed from the mobile lab, and returned to TA-59. A new box is prepared (tape the end of the box and line with a new plastic bag) and placed in the mobile lab.

12.1.2.5. The box is stored at TA-59 until the remainder of the analytical results characterizing the waste are obtained.

12.1.2.6. Once the above process is complete, the Waste Disposal Group (EM-7) is notified and waste disposal procedure is initiated.

12.2. Liquid waste.

12.2.1. Liquid waste is generated from the process of liquid scintillation analysis. After the samples have been counted, the samples are returned to EM-9 at TA-59, and accumulated with the routine tritium analysis sample vials.

12.3. Waste pickup.

12.3.1. The surface exposure rate of the sealed box is determined by a radiation protection technician and is recorded on the Radioactive Solid Waste Disposal (RSWD) Record form.

12.3.2. Pickup by the Waste Management group of the full boxes of waste is requested using the current Chemical Waste Disposal Request (CWDR) form. The current Waste Profile form

(WPRF) that describes the waste is referenced on both disposal request forms.

12.3.3. The Waste Management Group picks up the waste for disposal according to Laboratory policy.

13. Source Materials

13.1. Operation Manual, Tri-Carb Liquid Scintillation Analyzer, Models 2500TR, 2550TR/LL, 2569TR/XL. Publication Number 169-4044, Rev. D. Packard Instrument Company, One State Street, Meriden, CT, 06450 (1990).

13.2. H. Ross, J. Noakes and J. D. Spaulding, Eds., *Liquid Scintillation Counting and Organic Scintillators*, Lewis Publishers, Inc., 121 South Main Street, Chelsea, MI, 48118 (1991).

13.3. Procedure no. R230, "Tritium (T_2O or TOH)-Direct Procedure," *Health and Environmental Chemistry: Analytical Techniques, Data Management, and Quality Assurance*, M. A. Gautier, Ed., Los Alamos National Laboratory Manual LA-10300-M, Vol. I (1989).

13.4. "Low-Level Radioactive Solid Waste," Administrative Requirement 10-2, in *Environment, Safety, and Health Manual*, Los Alamos National Laboratory Manual, Chapter 1 (most recent edition).

13.5. "Chemical, Hazardous, and Mixed Waste," Administrative Requirement 10-3, in *Environment, Safety, and Health Manual*, Los Alamos National Laboratory Manual, Chapter 1 (most recent edition).

Mode: DPM
ype: tSIE/AEC

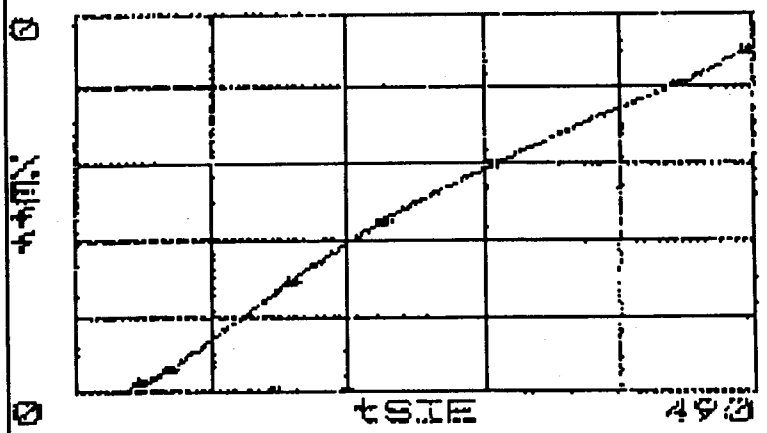

tSIE	%Eff
484.43	44.99
435.58	40.38
301.58	29.94
222.88	22.64
*194.92	7.50
155.79	14.72
*143.11	0.56
65.72	2.77
46.43	1.07

* indicates deleted point

Figure 1

Time: 5.00
Data Mode: DPM Nuclide: TRAL-H3 Quench Set: TRAL
Background Subtract: None

	LL	UL	LCR	2σ%	DKD
Region A:	0.0 -	18.8	0	0.0	0.00
Region B:	2.0 -	10.0	0	0.0	0.00
Region C:	0.0 -	0.0	0	0.0	0.00

Branch Indicator: SIE/AEC
Ext Std Terminator: Count

Luminescence Correction Dr
Color Quench Correction On
High Sensitivity Count Mode On

SH	TIME	CPMA	CPM1	SIGMA	SIG UNC	tSIE	FLAG
1	5.00	4.20	8.47	0.25	13615.00	536.50	C
2	5.00	19.20	38.79	1.18	-24062.00	535.42	E
3	5.00	15.80	36.29	1.09	-4183.00	473.02	
4	5.00	15.00	37.95	1.14	8284.00	477.79	
5	5.00	17.60	36.63	1.10	-26697.00	732.28	
6	5.00	0.00	0.00	0.00	0.00	487.51	E
7	5.00	1.20	2.39	0.07	-27973.00	543.25	E
8	5.00	20.20	40.35	1.21	32760.00	541.36	C
9	5.00	86.00	193.60	5.87	18153.00	477.30	
10	5.00	125.20	283.60	8.52	12806.00	479.08	
11	5.00	131.80	298.39	8.97	17104.00	479.02	
12	5.00	0.20	0.40	0.21	867.00	542.57	E
13	5.00	0.00	0.00	0.00	0.00	544.32	E
14	5.00	1143.60	2286.26	68.66	-10153.00	540.91	E
15	5.00	1586.20	3592.56	107.88	-13493.00	477.13	
16	5.00	2199.80	4797.19	204.12	-21005.00	478.94	
17	5.00	3054.30	7201.33	210.25	10584.00	477.54	
18	5.00	3158.20	7567.36	227.25	-14150.00	401.33	

Figure 2

GROSS MOISTURE ANALYSIS OF SILICATES IN A MOBILE RADIOLOGICAL LABORATORY

Analyte: Percent moisture	**Method No.:** MLR400
Matrix: Silicates	**Drying Options:** Time: 1 to 60 min Slope: 0.1 to 60 min 0.01 to 9.99% change
Procedure: Moisture determination system	
Effective Date: 10/10/92	**Author:** Bret Lockhart

SAFETY NOTE: Before beginning this procedure, read all of the Material Safety Data Sheets for the chemicals listed in Sec. 6. Read Sec. 4.3 of the EM-9 Safety Manual for information on personal protective clothing and equipment. Read Sec. 11 of this procedure and Source Material 12.3 and 12.4 for proper waste disposal practices.

1. Principal of Method

1.1. 10-15 g samples (silicates) are loaded directly on aluminum plates without chemical dissolution or evaporation.

1.2. Samples are heated at 200°C for 5 min on a moisture analyzer.

2. Sensitivity

2.1. The sensitivity varies with the percent change in soil moisture.

2.2. The minimum detectable limit for moisture is 0.01 percent in 0.1 min, based on any given sample weight, counted until percent change is not met.

3. Accuracy and Precision

3.1. The accuracy is 100% with a precision of ±0.1%

4. Collection and Storage of Samples

4.1. There are no special collection and storage requirements.

5. Apparatus

5.1. Moisture analysis instrument: Denver Instrument Company, model no. IR-100.

5.2. Disposable aluminum pans: 4.0-in. diam., 0.25 in. deep, part no. 900274.1, Denver Instrument Co.

5.3. Plastic weight boat: 4 × 4 in.

6. Reagents

6.1. No reagents are used in this technique.

7. Calibration

7.1. Since the instrument determines the weight loss in percent of the initial weight, routine calibration of the system is not necessary for accurate results. However, periodic calibration is suggested when the instrument is used as a standard electronic balance.

7.1.1. To calibrate the analyzer a class I 50-g weight is required.

7.1.2. Lift the heater hood and place an empty disposable aluminum pan on the pan support. Scroll through the Set up Menu by continuously pressing the **mode** key until the display shows **CALIBRATION.**

7.1.2.1. Press the **enter** key to access the calibration procedure. Message prompts guide the operator through this procedure:

CALIBRATION - - - -
PRESS TARE NOW

7.1.2.2. Press the tare key; display shows:

CALIBRATION - - - -
PLACE 50 g WEIGHT

7.1.2.3. Place 50-g weight on disposable pan; display shows:

CALIBRATION - - - -
PRESS ENTER NOW

7.1.2.4. Press the **enter** key, display shows:

CALIBRATION - - - -
CALIBRATING

7.1.3. When the calibration is complete, the display shows that the calibration is done. Remove the weight and the main screen returns.

8. Procedure

8.1. Silicates.

8.1.1. Obtain the sample aliquot from the cooler holding the samples.

8.1.2. Remove 10-15 g of soil from the sample bag and place it in a 4- × 4-in. plastic weigh boat.

9. Operation of the Instrument

9.1. Initialize moisture analyzer.

9.1.1. After the unit is turned on, the slope for the percent moisture change must be recalled. Program #1 is set at a 0.10% change in 0.5 min at 200°C. This is the program that will be used.

9.1.1.1. Press the **recall** key and the display will ask for the program you wish to run.

9.2. Drying a sample.

9.2.1. Lift the heater hood and place an empty disposable pan on the pan support. Press the **start** key and the display shows:

SAMPLE NUMBER
NUMBER ****

9.2.2. If a different sample number is desired, use the numerical keys to select the desired sample number. Any number of 1 to 8 digits can be used. After a few seconds the display shows:

WT = **.***
TARE PAN WEIGHT

9.2.3. Press the **tare** key; the display shows:

WT = 0.000*
PLACE SAMPLE ON

9.2.4. Place the sample on the disposable pan, spreading it evenly over the surface. Close the hood. Display shows:

WT = 3.002
PRESS START

9.2.5 Wait approximately 3 s for the unit to stabilize. Press the start key; the display shows:

WT = 3.002
WORKING
then
P1 TIME = 00.01
200 C 0:00%M

9.2.6. The printer automatically prints out initial data when the drying cycle begins.

9.2.7. When the drying cycle ends, the display shows:

I. WT = 3.002
F. WT = 2.91
then
DIFF = 0.86
PERC = 2.86

9.2.8. The printer automatically prints final results when the drying cycle ends or the **stop** key is pressed.

10. Calculations

10.1. When the operator selects one of the six options, the analyzer automatically changes to the appropriate calculation mode. During a drying procedure, the display always shows the selected mode. The final printout also includes the calculation mode with the results.

OPTION	DISPLAY SHOWS
MOISTURE	% M

$$\frac{\text{moisture weight}}{\text{wet weight}} \times 100$$

11. Proper Waste Disposal Practices

11.1. Solid waste.

11.1.1. Sample-contaminated waste.

11.1.1.1. Sample-contaminated waste includes plastic weigh boats, spatulas, used planchets, Mylar, syringes, centrifuge tubes,

filter disks, and gloves. The waste is accumulated in a plastic bag on a daily basis, sealed, and placed within a 1- × 2- × 2-ft cardboard box kept within the van.

11.1.1.2. The box is labeled as compactible waste. The box is opened only for the period of time necessary to add waste.

11.1.1.3. When the box is full, it is sealed with tape, removed from the mobile lab, and returned to TA-59. A new box is prepared (tape the end of the box and line with a new plastic bag) and placed in the mobile lab.

11.1.1.4. The box is stored at TA-59 until the remainder of the analytical results characterizing the waste are obtained.

11.1.1.5. Once the above process is complete, the Waste Disposal Group (EM-7) is notified and waste disposal procedure is initiated.

11.1.2. Sample waste.

11.1.2.1. The sample waste is the sample after the counting process has been completed. This includes the 100-g sample from the NaI(Tl) counter, the 1-g sample from the gross alpha/beta instrument, the 15 g from the extraction for tritium analysis, and the 5-g sample for the soil moisture analysis.

11.1.2.2. The waste is accumulated on a daily basis and placed within a smaller bag. This bag is then sealed and appropriately marked with the date the waste was accumulated and the sample range within the bag (this is for later sample retrieval, if necessary).

11.1.2.3. The box is labeled as compactible waste. The box is opened only for the period of time necessary to add waste.

11.1.2.4. When the box is full, it is sealed with tape, removed from the mobile lab, and returned to TA-59. A new box is prepared (tape the end of the box and line with a new plastic bag) and placed in the mobile lab.

11.1.2.5. The box is stored at TA-59 until the remainder of the analytical results characterizing the waste are obtained.

11.1.2.6. Once the above process is complete, the Waste Disposal Group (EM-7) is notified and waste disposal procedure is initiated.

11.2. Liquid waste.

11.2.1. Liquid waste is generated from the process of liquid scintillation analysis. After the samples have been counted, the samples are returned to EM-9 at TA-59, and accumulated with the routine tritium analysis sample vials.

11.3. Waste pickup.

11.3.1. The surface exposure rate of the sealed box is determined by a radiation protection technician and is recorded on the Radioactive Solid Waste Disposal (RSWD) Record form.

11.3.2. Pickup by the Waste Management group of the full boxes of waste is requested using the current Chemical Waste Disposal Request (CWDR) form. The current Waste Profile form (WPRF) that describes the waste is referenced on both disposal request forms.

11.3.3. The Waste Management Group picks up the waste for disposal according to Laboratory policy.

12. Source Materials

12.1. Instruction manual for the IR-100 Moisture Analyzer, Denver Instrument Company, P.O. Box 39575, Denver, CO. 80239 (10/91).

12.2. G. Brooks, "Data Reduction Program for the MRAL," in progress, Environmental Chemistry Group, Los Alamos National Laboratory, (1992).

12.3. "Low-Level Radioactive Solid Waste," Administrative Requirement 10-2, in *Environment, Safety, and Health Manual*, Los Alamos National Laboratory Manual, Chapter 1 (most recent edition).

12.4. "Chemical, Hazardous, and Mixed Waste," Administrative Requirement 10-3, in *Environment, Safety, and Health Manual*, Los Alamos National Laboratory Manual, Chapter 1 (most recent edition).

#31794
CONTROLLED

METALS IN SOIL (FIELD SCREENING)—EDXRF

Analtyes: Metals (K, Ca, Ti, Cr, Mn, Fe, Ni, Cu, Zn, As, Se, Cd, Sb, Ba, Hg, Pb, U, Th)	**Method No.:** EI732
Matrix: Soil or geological samples	**Accuracy and Precision:** For > 1000 ppm, accuracy = 100–105 %, precision (1σ) = 2–13% . For 20–1000 ppm, accuracy = 82–128 %, precision (1σ) = 8–35%.
Procedure: Energy-dispersive x-ray fluorescence spectrometry	**Minimum Detectable Concentration:** ~10 ppm
Effective Date: 09/01/93	**Author:** Steve Goldstein, Alice Slemmons, Heather Canavan

SAFETY NOTE: Before beginning this procedure, read SOP-17 of the Environmental Chemistry Safety Manual. Read Sec. 4.3 of the Environmental Chemistry Safety Manual for information on personal protective clothing and equipment. Read Sec. 12 of this procedure and Source Material 13.5 for proper waste disposal practices.

1. Principle of Method

1.1. Soil samples are dried, powdered, and sieved.

1.2. Samples are analyzed for trace metals by energy-dispersive x-ray fluorescence spectrometry (EDXRF).

2. Sensitivity

2.1. Sensitivity is determined by the counter background, excitation, and detection efficiency.

2.2. Detection limits (DLs), screening action levels (SALs), and soil background are shown in Table I. Detection limits for fixed-based, transportable, and field portable instruments are all calculated at the level of 3 times the standard deviation of the background for 200-s livetime. The detection limits decrease with increasing atomic number, as expected, and are typically 5–15 ppm for the fixed-base and transportable instruments. Detection limits are somewhat higher for the portable instrument, with a typical range of 10–100 ppm. Screening action levels for each

element are derived from dose assessment calculations or are set equal to the upper tolerance level of the background, defined as the 99th percentile of the background soil distribution at Los Alamos (Longmire et al., 1995). From these data, it is evident that the detection limits for the fixed-base and transportable instruments are lower than screening action levels for all elements with the exception of arsenic.

TABLE I. DETECTION LIMITS[a], SCREENING ACTION LEVELS, AND NATURAL SOIL BACKGROUND ABUNDANCES[b] FOR LOS ALAMOS SOILS (ppm)

Element	Laboratory EDXRF DL	Transportable EDXRF DL	Portable EDXRF DL	Screening Action Level	Los Alamos Background
K	120	100	180		
Ca	120	100	80		
Ti	195	30	63		
Cr	11	12	345	400	34
Mn	16	16	318	11000	1030
Fe	110	10	150		
Ni	28	13	96	1600	27
Cu	13	8	57	3000	16
Zn	12	5	57	24000	101
As	33	4	36	12	12
Se	5	4	23	400	2
Cd	2	3	89	80	3
Sb	3	4	33	32	3
Ba	11	10	10	5600	1140
Hg	10	5	49	24	1
Pb	12	7	18	400	39
Th	8	8	9	46	25
U	8	8	11	177	6

[a] Detection limits are defined at 3 times the standard deviation of the background for each x-ray line.

[b] Soil background abundances (Longmire et al., 1995) are those at the upper tolerance limit, which is defined as the 99th percentile of the natural concentration distribution at Los Alamos. Average soil abundances are generally a factor of 5-10 lower than the upper tolerance limit.

3. Accuracy and Precision

3.1. Results for 10 certified soil/rock materials analyzed as open quality control (QC) check standards are summarized in Table II. These standards include the Canadian Certified Reference Material (CCRM) soils SO-1, SO-2, SO-4, the CCRM

reference stream and lake sediment standards STSD-1, STSD-2, STSD-3, STSD-4, and LKSD-3, the CCRM syenite rock standard SY-3, and the National Institute for Standards and Technology (NIST) estuarine sediment reference material 1646. Typically, average accuracy is in the range of 90–110%. Deviations from this are primarily related to the lower concentration range for certain elements (i.e., Cr, Ni, Cu, Zn, As, Sb, U, Th) in these check standards. Of elements present at high concentration (>1000 ppm), only Ti appears to show a significant bias, but this reflects the fact that one of the check standards (SY-3) has a 0% accuracy due to misidentification of the Ti K-alpha line as a lanthanide L line. For certain elements, including Hg, Se, and Cd, no check standards were available with high enough concentrations to permit quantification of these elements and an estimate of accuracy.

TABLE II. QUALITY CONTROL CHECK STANDARD RESULTS

Element	Concentration Range	Accuracy Range	Average Accuracy	Bias[a]
K	1.00–3.49%	92–141%	105%	no
Ca	0.83–5.90%	91–129%	104%	no
Ti	900–8600 ppm	0–95%	83%	?
Cr	12–116 ppm	97–525%	164%	?
Mn	370–3950 ppm	81–133%	102%	no
Fe	2.37–6.00%	91–114%	100%	no
Ni	30–94 ppm	61–260%	128%	no
Cu	16–65 ppm	20–124%	85%	no
Zn	94–246 ppm	84–128%	97%	no
As	7–42 ppm	25–114%	82%	no
Se				?
Cd				?
Sb	3-7 ppm	58–189%	112%	no
Ba	400-2000 ppm	97–117%	104%	no
Hg				?
Pb	16–130 ppm	78–146%	105%	no
Th	9-990 ppm	63–117%	88%	no
U	8-650 ppm	103–137%	126%	no

[a] Elements marked with "?" may show a small bias based on the accuracy results or have no suitable standards for which to evaluate accuracy.

3.2. Results for a portable instrument and fixed-base instrument are compared in the table below for a set of 25 soil samples from Los Alamos. These results are obtained on the same sample cup for both instruments, hence differences reflect biases due to instrumental analysis only. Consistent results are obtained for the two

instruments, with agreement to within 20% for most elements. However, some elements show large positive biases (factor of 5–40) for the portable instrument, including As, Th, and U. This may be due to the somewhat poorer energy resolution and greater spectral overlap for these elements with the portable instrument, which has a HgI detector. Nominal energy resolution for fixed-base and portable instruments are 200 and 300 eV for the Cu K-alpha, respectively.

TABLE III. COMPARISON OF PORTABLE AND FIXED-BASE EDXRF

Element	Number of Samples	Average Portable/Fixed-Base	Bias[a]
K	25	125%	no
Ca	25	120%	no
Ti	25	86%	no
Cr	1	66%	?
Mn	13	102%	no
Fe	25	98%	no
Ni	0		?
Cu	2	71%	?
Zn	24	144%	no
As	7	1660%	yes
Se	1	4090%	?
Cd	0		?
Sb	0		?
Ba	25	77%	no
Hg	0		?
Pb	6	79%	no
Th	22	460%	yes
U	20	3380%	yes

[a] Elements marked with "yes" show a large bias between portable and laboratory EDXRF based on a large population of samples, while those with "?" may show a small bias or are based on too small a sample population to evaluate the two methods.

3.3. Results for EDXRF and standard nitric acid digestion/inductively coupled plasma (ICP) methods prescribed by the United States Environmental Protection Agency (EPA) are shown in Table IV. Average XRF/ICP results are 78 for K; 2–6 for Mn, Fe, Pb, Cr, Cu, Ca, and Ba; and 0.8–1.1 for As, Ti, and Zn. These differences most likely reflect the fact that the XRF technique is measuring total amounts of the analyte, whereas standard EPA methods are measuring only the nitric acid-digestable part of the soil and not the matrix. These results are somewhat consistent with prior studies comparing wet chemical analysis after

hydrofluoric acid digestions with nitric acid digestions. The hydrofluoric acid digestion provides total dissolution of the sample, whereas the nitric acid digestion does not dissolve the silicate matrix constituents. Results of this comparison show that totally dissolved samples can have up to factors of 2–10 greater concentrations for certain elements than nitric acid digested samples (Kane et al., 1993; NIST, 1993; Longmire et al., 1995). From these data, it is evident that XRF and EPA methods are not directly comparable for relatively pristine soils, For these samples, the EDXRF technique will provide a much more conservative estimate of elemental contamination than standard EPA procedures. However, in contaminated soils where most of the analyte is nitric-acid-leachable, EDXRF and standard EPA methods should give more similar results.

TABLE IV. COMPARISON OF EDXRF AND NITRIC ACID DISSOLUTION/ICP DATA

Element	Number of Samples	Average XRF/ICP	Standard Deviation	Comments[a]
K	20	77.5	49.9	>
Ba	20	6.2	3.4	>
Ca	20	3.9	1.7	>
Cu	7	3.3	1.4	>
Cr	6	3.1	1.9	>
Pb	17	2.6	1.5	>
Fe	20	2.3	0.9	>
Mn	20	2.1	1.0	>
Zn	20	1.1	0.4	=
As	1	1.0	0.4	?
Ti	1	0.8		?
Se				?
Cd				?
Sb				?
Hg				?
Th				?
U				?

[a] Elements marked with "=" show no difference between methods, whereas elements with ">" indicate a significant difference. Elements with "?" have too few data to make a valid comparison.

4. Interferences

4.1. Spectral overlaps are automatically corrected by the data analysis program.

5. Collection and Storage of Samples

5.1. Soil samples are collected in polybottles. A 10-g sample is required for analysis. Samples are stored under chain-of-custody rules, using "do not tamper" seals, in a locked laboratory. If samples are to be extracted for organic analyses, they should be processed within 40 days of receipt.

6. Apparatus

6.1. XRF Spectrometer: Spectrace 5000 or 6000 EDXRF spectrometer, equipped with x-ray tube excitation, electrically cooled SiLi detector, and IBM-compatible 386/486 computer for system operation, spectral processing, analysis, and storage.

6.2. Convection/microwave oven: Sears Kenmore micro\convection oven #89561 or standard convection oven.

6.3. Mixer/mill: Spex 8000 mixer mill.

6.4. Grinding vials: Spex #8005 zirconia ceramic vial set.

6.5. Sieves: 100- and 10-mesh, nylon screen with plastic frame, 70-mm-diam, Spex #3536.

6.6. XRF sample cups: disposable, polyethylene, 31-mm-diam, Chemplex #1430.

6.7. X-ray film: Prolene, 0.00016-in. gauge, Chemplex #416.

6.8. Petri dish: Pyrex, 94-mm-diam.

6.9. Weighing paper.

7. Reagents

7.1. No reagents are required.

8. Calibration and Standards

8.1. Calibration of the EDXRF spectrometer.

8.1.1. Energy calibration of the spectrometer is performed daily using the copper K-alpha line. Stability and resolution are checked on a monthly basis, with the following specifications for copper:

Full-width half maximum (FWHM): <220 ev ± 5 ev maximum
Peak centroid: 8041 ± 3 ev maximum
Total counts: 2 million or more ± 0.5% maximum
Peak counts: 1 million or more ± 0.5% maximum
Elapsed time: 8 h

8.2. Pure-element standards.

8.2.1. Reference spectra are acquired for each analyte as well as major or minor components that have interfering x-ray lines. Pure-element metals or compounds are used to acquire these spectra.

8.3. Soil standards.

8.3.1. Peak intensities are converted to concentrations using a fundamental parameters analysis method, with seven soil standards used to determine pure-element count rates. Standards and samples are analyzed under identical conditions. Typical agreement of pure-element count rates is ±12% (1σ) with best standardization (<10%) for U, Mn, Cr, K, Fe, Cu, Cd, and Ba and less robust (~20%) calibration for Ti, Ni, and As.

8.3.2. We used seven soil/rock standards to represent a broad range in composition and location: NIST 2704 (Buffalo River Sediment), NIST 1648 (Urban Air Particulate Matter), NIST 2709 (San Joaquin Soil), NIST 2710 and 2711 (Contaminated Montana Soils), CCRM SY-2 (Syenite Rock Standard), and CCRM BL-4 (Uranium Ore). These are all essentially silicate-based materials with standards 1648, 2710, and 2711 having elevated transition metal concentrations and SY-2 and BL-4 having high actinide and lanthanide concentrations.

8.3.3. For QC purposes, at least one standard per 10 samples should be analyzed as an unknown.

8.3.4. Standardization is performed approximately every 2 months or more frequently if required because of instrument repair or relocation.

8.4. Open and blind QC standards.

8.4.1. One each of open and blind QC soil or geological standards should be analyzed per 10 samples at the beginning and end of each run.

9. Procedure

9.1. Sample preparation—soils.

9.1.1. Shake the sample container and transfer approximately 20 g of sample into a petri dish.

9.1.2. Microwave on 50% power for 5 min or heat in convection oven at 100°C for 1 h or overnight until dry.

9.1.3. For rapid analyses, samples are sieved through a 100-mesh screen without the 10-mesh prescreen or mixing/milling. Go to Step 9.1.7.

9.1.4. Pass the sample through a < 10-mesh screen to remove large objects and pass < 10-mesh sample through a 100-mesh screen. Discard the > 10-mesh fraction.

9.1.5. Transfer the > 100-mesh fraction to a zirconia vial. Mill/mix the sample for 5 min.

9.1.6. Pass the milled sample through a 100-mesh screen.

9.1.7. Transfer the < 100-mesh sample to an XRF sample cup. Fill the sample cup to the top with sample.

9.1.8. Cover the sample cup with prolene film and label the cup with the request and sample number.

9.1.9. Between samples, clean the equipment with a dry Kimwipe. At the end of preparation, clean with water or blow dry-clean. This procedure has a cross-contamination factor of 1 part in 1000–10000, which is adequate for field characterization.

9.2. Sample analyses.

9.2.1. Samples are analyzed under the following conditions:

Low Z (K-Fe lines):
- 0.127-mm Al filter
- tube voltage = 13–15 kV
- live time = 200 s.

Mid Z (Ni-Se K lines, Hg-U L lines):
- 0.127-mm Al + 0.127-mm Rh filter
- tube voltage = 30–35 kV
- live time = 200 s.

High Z (Cd-Ba K lines):
- 0.127-mm Al + 0.63-mm Cu filter
- tube voltage = 50 kV
- live time = 200 s.

9.2.2. Open and blind QCs, standards, and duplicate samples are analyzed at a frequency of 10%.

10. Operation of the X-Ray Fluorescence Spectrometer

10.1. Refer to the operating manual for the XRF spectrometer.

11. Calculations

11.1. Total peak and background counts are determined for each analyte. Net counts are converted to concentration by use of a fundamental parameters (FP) program, using five standards to determine pure-element count rates for each analyte. The FP program corrects for any matrix enhancement or absorption effects.

11.2. Calculations are made using the following formulas.

11.2.1. Detection limit.

$$C_{LLD} = \frac{3 \times C_{Std} \times \sqrt{N_b}}{N_n} ,$$

where C_{LLd} = detection limit,
C_{Std} = concentration of analyte in the standard,
N_b = total background counts, and
N_n = net peak counts.

For a 200-s live time, typical detection limits are approximately 10 ppm.

11.2.2. Precision due to counting statistics.

$$\%RSD = \frac{\sqrt{N_g + N_b}}{N_g - N_b} \times 100\% ,$$

where %RSD = percent relative standard deviation,
N_g = gross counts, and
N_b = background counts.

The precision calculation is due to counting statistics only and is only one source of variance in the measurement. Other contributors to variance include instrumental precision, sample preparation, and sampling. Analysis of replicates is a more reliable but tedious way to determine overall precision.

12. Proper Waste Disposal Practices

12.1. Soil samples are returned to the Sample Management team for disposal.

13. Source Materials

13.1. W. Watson, J.P. Walsh, and B. Glynn, "On-Site X-Ray Fluorescence Spectrometry Mapping of Metal Contaminants in Soils at Superfund Sites," *American Laboratory 21*, 60 (1989).

13.2. D. E. Leyden, "Energy-Dispersive X-Ray Spectrometry," *Spectroscopy* **2**, 28-36 (1987).

13.3. A. R. Harding, "Fundamental Parameter Method EDXRF Analysis of Contaminated Soils," *Spectrace Technical Review*.

13.4. Spectrace 5000 and 6000 Operators, Technical, and Software Manuals.

13.5. "Hazardous and Mixed Waste," Administrative Requirement 10-3, in *Environment, Safety, and Health Manual*, Los Alamos National Laboratory Manual, Chapter 1 (most recent edition).

13.6. "Handling and Disposal of Hazardous Materials," SOP-3, in *Environmental Chemistry Group: Environment, Safety, and Health Program*, Appendix III, Los Alamos National Laboratory document (most recent edition).

13.7. "Operation of an Energy-Dispersive X-Ray Fluorescence Spectrometer," SOP-17, in *Environmental Chemistry Group: Environment, Safety, and Health Program*, Appendix III, Los Alamos National Laboratory document (most recent edition).

13.8. P. Longmire, S. Reneau, P. Watt, L. McFadden, J. Gardner, C. Duffy, and R. Ryti, draft manuscript (1995).

13.9. J. S. Kane, S. A. Wilson, J. Lipinski, and L. Butler, *Am. Env. Lab. Application Note* (1993).

13.10 National Institute of Standards and Technology, Addendum to SRM Certificates 2709, 2710, and 2711 (1993).

13.11 J. W. Criss and L. S. Birks, *Anal. Chem.* **40**, 1080 (1968)

13.12 G. R. LaChance and R. J. Traill, *Canadian Spectroscopy* **11**, 43 (1966).

13.13 P. A. Pella, G. Y. Tao, and G. Lachance, *X-ray Spectrom.* **15**, 251 (1986).

13.14 D. B. Bilbrey, G. R. Bogart, D. E. Leyden, and A. R. Harding, *X-Ray Spectrom.* **17**, 63 (1988).

13.15 D. K. G. de Boer, J. J. M. Borstrok, A. J. G. Leenaers, and H. A. van Sprang, *X-Ray Spectrom.* **22**, 33 (1993).

Revisions or additions to the procedure are marked ( ). Where a section heading is marked, the entire section has been revised.

CONTROLLED

ANALYTICAL PROCEDURE REVIEW AND APPROVAL

Method: Metals in Soil (Field Screening)—Energy-Dispersive X-Ray Fluorescence Spectrometry (EDXRF)

Method No.: EI732 **Revision No.:** 1

Team Leader Steve Goldstein **Date:** 1/27/96

Group Leader Laura C. Lacati **Date:** 1/28/96

QA Concurrence Margaret A. Gautier **Date:** 1/28/96