CONTROLLED DOCUMENT
RDL-NES-0007, Rev. 0
This copy is uncontrolled if no signatures are present on printed copies. Users are responsible for ensuring they work to the latest approved revision.

LA-UR-06-2823
May 2006
ER2006-0323

Technical Safety Requirements Implementation Plan for Characterization Activities at Technical Area 21, Material Disposal Area T, Nuclear Environmental Site, Revision 0

Los Alamos
NATIONAL LABORATORY
EST. 1943

14380

Disclaimer

This document contains data on radioactive materials, including source, special nuclear, and by-product material. The management of these materials is regulated under the Atomic Energy Act and is specifically excluded from regulation under the Resource Conservation and Recovery Act and the New Mexico Hazardous Waste Act. Information on radioactive materials and radionuclides, including the results of sampling and analysis of radioactive constituents, is voluntarily provided to the New Mexico Environment Department in accordance with U.S. Department of Energy policy.

Prepared by
Environmental Stewardship Division–
Environmental Remediation and Surveillance Program

Los Alamos National Laboratory, an affirmative action/equal opportunity employer, is operated by the University of California for the United States Department of Energy under contract W-7405-ENG-36.

This report was prepared as an account of work sponsored by an agency of the United States Government. Neither the United States Government nor any agency thereof, nor any of their employees, nor any of their contractors, subcontractors or their employees, makes any warranty, express or implied, or assumes any legal liability or responsibility for the use of any apparatus, product, or process disclosed, or represents that its use would not infringe privately owned rights. Reference herein to any specific commercial product, process, or service by trade name, trademark, manufacturer, or otherwise, does not necessarily constitute or imply its endorsement, recommendation, or favoring by the United States Government or any agency thereof or its contractors or subcontractors.

Los Alamos National Laboratory strongly supports academic freedom and a researcher's right to publish; as an institution, however, the Laboratory does not endorse the viewpoint of a publication or guarantee its technical correctness. By acceptance of this article, the publisher recognizes that the U.S. Government retains a nonexclusive, royalty-free license to publish or reproduce the published form of this contribution, or to allow others to do so, for U.S. Government purposes. Los Alamos National Laboratory requests that the publisher identify this article as work performed under the auspices of the U.S. Department of Energy.

LA-UR-06-2823
ER2006-0323
RDL-NES-0007, Rev. 0

Technical Safety Requirements Implementation Plan for Characterization Activities at Technical Area 21, Material Disposal Area T, Nuclear Environmental Site, Revision 0

May 2006

Printed Name	Signature	Title	Organization	Date
Doug Stavert		Responsible Division Leader	ENV-DO	5/8/06
Alison M. Dorries		Responsible Line Manager	ENV-ECR	5/8/06
Mark S. Thacker		Project Leader	ENV-ECR	5/8/06

CONTENTS

1.0 INTRODUCTION 1

2.0 PURPOSE 1

3.0 SITE DESCRIPTION 2

4.0 OPERATIONS 2

4.1 Presampling Tasks 2
4.2 Sampling Tasks 3
4.3 Postsampling Tasks 4

5.0 ADMINISTRATIVE CONTROLS 5

5.1 Purpose 5
5.2 Organization and Management Responsibility 5
5.3 Technical Safety Requirements 6
5.4 Procedures 6
5.5 Review and Audit 7
5.6 Safety Management Programs 7
5.6.1 SMP 1: NES S&M Program 7
5.6.2 SMP 2: Integrated Work Management 17
5.6.3 SMP 3: Unreviewed Safety Question Program 18
5.6.4 SMP 4: Nuclear Criticality Program 19
5.6.5 SMP 5: Radiation Protection Program 19
5.6.6 SMP 6: Quality Assurance Program 20
5.6.7 SMP 7: Abnormal Event Reporting Program 21
5.6.8 SMP 8: Qualification and Training Program 21
5.6.9 SMP 9: Record-Keeping Program 22
5.6.10 SMP 10: Configuration Management 22
5.6.11 SMP 11: Vehicle and Equipment Maintenance 23
5.6.12 SMP 12: Emergency Preparedness 24
5.6.13 SMP 13: Fire Protection 24
5.6.14 SMP 14: Calibration Program 25
5.6.15 SMP 15: Hazardous Materials Protection Program 26
5.6.16 SMP 16: Radioactive and Hazardous Waste Management Program 26

6.0 DESIGN FEATURES 27

6.1 Inventory Isolation System 27
6.1.1 Primary Containment Vessels 27
6.1.2 Configuration of Burial 27
6.1.3 Burial Depth 27
6.1.4 Inventory Distribution 28
6.1.5 Thickness and Characteristics of Cover Material and Caps 28
6.2 Performance Criteria 29

7.0 CONDUCT OF OPERATIONS 29

8.0 OTHER REQUIREMENTS 29

8.1 Miscellaneous Nuclear Environmental Site Surveillance and Maintenance Requirements 29
8.2 Suspend or Stop Work Conditions 29

9.0 REFERENCES **29**

Appendix

Appendix A Criticality Assessment for Characterization Activities at MDA T, Technical Area 21

Figures

Figure 3.0-1 Location of the NES and boreholes within MDA T28 31
Figure 3.0-2 Main disposal features and SWMUs at MDA T 32
Figure 3.0-3 Cross-section of an absorption bed at MDA T 33
Figure 5.2-1 Organization and management responsibility flowchart for S&M activities conducted at the MDA T NES 34
Figure 5.3-1 TSR violation notification process 35
Figure 5.6-1 Evaluation and screening flowchart of exhumed materials 36

Tables

Table 4.2-1 Summary of Proposed Borehole Drilling and Sampling at MDA T 37
Table 5.6-1 Monitoring and Measurement Control Criteria 38
Table 8.1-1 Additional Requirements 39
Table 8.2-1 Suspend or Stop Work Conditions 40

Acronyms and Abbreviations

AC	administrative control
ALARA	as low as reasonably achievable
AOC	area of concern
ARS	Advanced Radiation Services
bgs	below ground surface
CRZ	contamination reduction zone
DBM	design basis memorandum
DOE	Department of Energy
DOT	Department of Transportation
DP	Delta Prime
DSA	documented safety analysis
ECR	Environmental Characterization and Remediation
EM	electromagnetic
EM&R	Emergency Management and Response (Laboratory group)

ENV-ECR	Environmental Stewardship–Environmental Characterization and Remediation Group
ENV-ERS	Environmental Stewardship–Environmental Remediation and Surveillance Program
ER	Environmental Restoration Project
EZ	exclusion zone
FTA	Facility Tenant Agreement
FTL	field team leader
GPR	ground-penetrating radar
GPS	global positioning system
HAZWOPER	Hazardous Waste Operations and Emergency Response
HC	hazard category
HSA	hollow-stem auger
HSR	Health, Safety and Radiation
I.D.	inner diameter
IMP	implementing procedure
IQMP	Institutional Quality Management Program
ISM	Integrated Safety Management (Program)
IWD	integrated work document
IWM	integrated work management
LANL	Los Alamos National Laboratory
LASL	Los Alamos Scientific Laboratory
LIR	Laboratory Implementation Requirement
LLW	low-level waste
LPR	Laboratory Performance Requirement
MDA	material disposal area
MSA	management self-assessment
NES	nuclear environmental site
NMED	New Mexico Environment Department
NNSA	National Nuclear Security Administration
NWIS	Nuclear Waste and Infrastructure Services (Laboratory Group)
O.D.	outer diameter
OSHA	Occupational Safety and Health Administration
OST	Operations Support Tool
PIC	person in charge
PM	project manager
PPE	personal protective equipment
PS	Performance Surety

QA	quality assurance
QMP	Quality Management Program
QP	quality procedure
RCA	radiological controlled area
RCRA	Resource Conservation and Recovery Act
RCT	radiation control technician
RDL	responsible division leader
RFI	RCRA facility investigation
RLM	responsible line management
RLW	radioactive liquid waste
RPF	Record Processing Facility
RWP	radiological work permit
RWSA	retrievable waste storage area
S&M	surveillance and maintenance
SER	safety evaluation report
SMO	Sample Management Office
SMP	safety management program
SOP	standard operating procedure
SSHASP	site-specific health and safety plan
SSO	site-safety officer
SUP	supply-chain management
SWMU	solid waste management unit
SZ	support zone
TA	technical area
TD	total depth
TRU	transuranic
TSR	technical safety requirement
TWA	time-weighted average
USQ	unreviewed safety question
UTR	university technical representative
VOC	volatile organic compounds
WCSF	waste characterization strategy form

1.0 INTRODUCTION

In November 2004, Los Alamos National Laboratory (LANL or the Laboratory) submitted a documented safety analysis (DSA) for surveillance and maintenance (S&M) of nuclear environmental sites (NESs) in accordance with Chapter 10 of the Code of Federal Regulations Part 830 (10 CFR 830), Subpart B, "Safety Basis Requirements," and Section 204 of 10 CRF 830, "Documented Safety Analysis" (LANL 2004, 88713). A safety evaluation report (SER) issued in January 2005 summarizes the basis upon which the U.S. Department of Energy (DOE) National Nuclear Security Administration (NNSA) approves the Laboratory's DSA and the technical safety requirements (TSRs) for NESs in accordance with 10 CFR 830 (DOE 2005, 88752).

To implement the DSA, the Laboratory is required to perform S&M activities to ensure that site contaminants do not migrate from their current location. Key surveillance activities conducted by the Laboratory are geophysical surveys, radiological surveys, and drilling to determine the nature and extent of contamination at waste management areas. The Laboratory's Environmental Stewardship Division–Environmental Remediation and Surveillance (ENV-ERS) Program, formerly the Environmental Restoration (ER) Project, implements characterization investigations to determine the nature and extent of contamination pursuant to the conditions of Section IV.C.2.e of the Compliance Order on Consent (hereafter, the Consent Order) signed by the New Mexico Environment Department (NMED), the DOE, and the Regents of the University of California (UC) on March 1, 2005. The Consent Order requires that the Laboratory and DOE conduct and report on the results of prescribed investigations in accordance with a negotiated schedule.

The Laboratory has concluded that the barrier analysis method is the most appropriate to evaluate hazards associated with S&M activities at NESs. In this barrier analysis, disposal sites were reviewed qualitatively to identify potential hazards to workers, the public, or the environment during drilling and sampling activities. Qualitative analysis was performed to identify physical and administrative barriers that either prevent or mitigate these hazards. As a result of the barrier analysis, two barriers were identified that control against adverse consequences associated with the NES. The first barrier is a design feature known as the Inventory Isolation System, which provides the primary barrier to the release of nuclear material to the environment. The Inventory Isolation System at Material Disposal Area (MDA) T is a composite system that uses burial in vertical shafts and absorption beds, inventory distribution, and 5 to 6 ft of cover to protect waste against the effects from external forces, including drilling. The second barrier is a comprehensive set of administrative controls (ACs) specifically designed to ensure that the Inventory Isolation System meets the functional requirements and does not degrade over time or as a result of S&M activities. The results of the barrier analysis show that the potential hazards to workers, the public, or the environment are effectively mitigated or prevented through implementation of the TSRs.

2.0 PURPOSE

The purpose of this implementation plan is to detail how the TSRs will be implemented at the MDA T NES, as required by the DSA (LANL 2004, 88713.2) and TSR document (LANL 2005, 88713.64). This plan provides a description of, and guidance for, the safety controls that will be implemented to ensure that the workers, the public, and the environment are protected from the radiological, chemical, and other hazards associated with the characterization activities to be conducted at the MDA T NES.

The characterization activities are defined in the NMED-approved MDA T investigation work plan (LANL 2004, 85641) and include performing surface radiological and geophysical surveys, drilling 39 boreholes (1 at the NES and 38 in the surrounding area), geologically logging recovered core samples and

collecting subsurface analytical samples to evaluate the potential migration of contaminants. A description of the Inventory Isolation System at the MDA T NES is provided in Section 6.

The Laboratory's Environmental Stewardship–Environmental Characterization and Remediation (ENV-ECR) Group will conduct the characterization activities detailed in the NMED-approved MDA T investigation work plan. The Environmental Stewardship Division has assigned the responsible division leader (RDL) for the MDA T NES.

3.0 SITE DESCRIPTION

The NES at MDA T (Figure 3.0-1) has been identified by the Laboratory, and with DOE NNSA concurrence, as a hazard category (HC) 2 nuclear facility (LANL 2004, 88713.2). MDA T is located 0.2 mile east of the intersection of Delta Prime (DP) Road and the north perimeter road of Technical Area (TA) 21. This NES is a part of Consolidated Unit 21-016(a)-99, which consists of Solid Waste Management Units (SWMUs) 21-007, 21-010 (a through h), 21-011(a), 21-011(c through g,j,l), 21-016(a,b,c), 21-001, 21-011(h), 21-028(a), and Areas of Concern (AOCs) C-21-009 and C-21-012 (Figure 3.0-2). The NES is a northwest-trending rectangle with a boundary that encompasses 62 shafts and 4 absorption beds of SWMU 21-016(c) and 21-016(a) (Figure 3.0-1). A fence encloses the NES and the immediate surrounding areas and is locked at all times when the site is not occupied. One small area of the west corner of the NES is under an access road and is not enclosed within the fence.

SWMU 21-016(a) consists of four inactive absorption beds that were operational between 1945 and 1967. These beds were excavated trenches approximately 140 ft long, 20 ft wide, and 14 ft deep, filled with about 2 ft of crushed, clean tuff, covered with 1 ft of gravel, and topped with 1 ft of sand. Radioactive liquid waste (RLW) was discharged to the absorption beds from perforated pipes buried near the base of each bed (Figure 3.0-3). The purpose of the tuff fill, gravel, and sand was to facilitate absorption of liquid waste and minimize migration away from the site. The absorption beds received untreated waste from TA-21 uranium- and plutonium-processing laboratories (Buildings 21-2, -3, -4, -5, -1, and -150) and the 6 ft of crushed tuff over the absorption beds (LANL 2004, 85641).

The 62 waste disposal shafts at MDA T are nominally 4 ft, 6 ft, and 8 ft in diameter and vary in depth to 65 ft based on a 2003 study of historical documents (Haaker 2003, 76097). The shafts and absorption beds were covered with 5 to 6 ft of fill soil, giving a total depth below existing ground surface of 71 ft.

4.0 OPERATIONS

Presampling, sampling, and postsampling tasks are discussed in the subsections below.

4.1 Presampling Tasks

Before S&M activities are conducted at the MDA T NES, equipment trailers, sampling equipment, and health and safety and radiological monitoring equipment will be mobilized to the site. The site safety officer (SSO) and/or other appropriately trained personnel will inspect the equipment before work begins and during the course of activities to ensure that the equipment is in safe and good working order and is properly maintained. The SSO will also ensure that only qualified personnel operate the equipment.

A single borehole will be drilled and sampled in the scope of this plan. Presampling tasks within the NES will help confirm that the borehole will be drilled in a location that will not impact the Inventory Isolation System. The planned pre-sampling activities involve conducting radiological, geophysical, and geodetic

surveys, marking the planned borehole and the NES boundary, conducting utility markouts, staging any accessory materials and equipment required for operations, and setting up the drilling equipment at the borehole location. The geophysical survey has been conducted to help confirm the locations of the absorption beds and shafts before the drill rig is mobilized to the MDA T NES. The results of the geophysical survey did not conclusively delineate absorption bed or shaft boundaries.

The northeast corner of absorption bed 4 is marked with a survey monument that serves as a fixed reference point in the field for the NES boundary. Staking of the NES corners using the coordinates presented in the design basis memorandum (DBM) confirmed the location of this corner. Boreholes 21-05051 through 21-05056, 21-05073 and 21-05075 were previously drilled into the absorption beds at MDA T for the 1996/1997 Resource Conservation and Recovery Act (RCRA) facility investigation (RFI) (Figure 3.0-1). Each borehole encountered absorption bed fill material, which confirms the alignment of the absorption beds. Boreholes 21-05057 and 21-05058 were drilled within the footprint of the former retrievable waste storage area (RWSA). Borehole 21-05057 is most significant because it confirms the location of the RWSA excavation adjacent to the northwest end of the disposal shaft field. Therefore, locating the planned borehole (designated BH 6) immediately northwest of location 21-05057 will ensure that any issues related to uncertainty of the shaft field location are eliminated (Figure 3.0-1). If BH 6 needs to be relocated, it will be in a northwesterly direction, away from the disposal shaft field.

Driving over the absorption beds and disposal shafts will be minimized. Hydraulic lines can fail or leak during drilling operations. To prevent an environmental release of hydraulic fluid, plastic sheeting will be placed on the ground beneath the drill rig before the rig is set up. Plastic sheeting will also be placed around the borehole location during drilling to prevent the spread of radiological contaminants in the event that they are brought to the surface as part of normal drilling operations. The drill rig will be stabilized over the borehole location with blocking and jacks, and the mast will be raised and plumbed using a bubble level to ensure installation of a vertical borehole.

During mobilization and initial setup, the MDA T NES will be posted with signs containing site and contact information. Entry to the site will be restricted and controlled by using temporary orange traffic fencing, postings, and cones. Hazardous Waste Operations and Emergency Response (HAZWOPER) zones will be established and posted at the site (see details in Section 5.6.1.4).

4.2 Sampling Tasks

The borehole within the MDA T NES, BH 6, will be drilled, logged, and sampled in accordance with the NMED-approved MDA T investigation work plan (LANL 2004, 85641). BH 6 will be located just west of former borehole 21-05057 (Figure 3.0-1), as discussed above in Section 4.1. Sampling will be accomplished using the hollow-stem auger (HSA) drilling technique. The HSA borehole is planned to be advanced to a total depth of 280 ft below ground surface (bgs). Table 4.2-1 provides information regarding the planned depth, adjacent disposal unit, and number and types of samples to be collected from BH 6.

The drill rig will be equipped with hex-rod core retrieval systems, 4-in.-outer-diameter (O.D.) stainless-steel core barrels, and 4.25-in.-inner-diameter (I.D.) HSAs (designated as 4.25-in. HSAs). In the event that the HSA method of drilling cannot reach the planned borehole depth, the drill rig will be reconfigured to use air-rotary methods. If the air-rotary method is used, discharges of cuttings from the borehole will be filtered through a cyclone separator and air filter to control dust.

BH 6 will first be drilled through the surface cover (crushed tuff, fill) to the underlying Qbt 3 bedrock. During drilling with the HSA technique, the cuttings will be brought to the surface through the rotating augers on the outside of the drill stem. Continuous core will be recovered using the core barrels through

the center of the 4.25-in. drill string. At the surface, the cuttings and core will be surveyed for radiological activity, organic vapors, and for matrix identification (e.g., soil, fill, Qbt 3), as described in Section 5.6.1.5. Once the depth to bedrock has been determined, the borehole will be over-reamed to set surface casing. Up to a 20-ft length of 12-in.-I.D. steel surface casing will be installed with minimum stickup to allow for unobstructed drilling operations. After the 12-in.-I.D. surface casing is installed, drilling and coring will continue using 4.25-in.-I.D. HSAs to the total planned depth of the borehole.

Once screening of the core barrel has been conducted and it is determined that radiological screening thresholds (as discussed in Section 5.6.1.5 below) are not exceeded, the core barrel will be opened and the core material monitored, geologically logged, and then sampled according to ENV-ECR Standard Operating Procedure (SOP) 6.26, *Core Barrel Sampling for Subsurface Earth Materials.* Core-sampling activities involve taking portions of the core material and placing them in the appropriate sampling containers. Once containerized, the sample will be labeled, documented, and preserved for transport to the radiation screening laboratory operated by Advanced Radiation Services, LLC (ARS), and the Laboratory's Sample Management Office (SMO). If field screening indicates the presence of radioactivity above background, the decision to transport samples by the Laboratory supply-chain management (SUP) 5 Hazardous Material Packaging and Transport Operations will be based upon ECR SOP-1.03, *Handling, Packaging, and Transporting Field Samples.* If field screening does not indicate the presence of radioactivity above background, or if radioactivity is detected at low levels, the samples will be transported by project personnel using government, subcontractor-owned, or rental vehicles. Based on radiation screening results, the samples will be evaluated by the SMO to ensure compliance with U.S. Department of Transportation (DOT) regulations before they are shipped off-site for laboratory analysis.

After the drilling and core sampling have been completed, pore-gas samples may be collected from the borehole for analysis of volatile organic compounds (VOCs) and tritium according to ECR SOP-6.31, *Sampling of Subatmospheric Air.* Each interval will be purged before sampling until measurements of carbon dioxide and oxygen are stable. Subsurface vapor samples will be collected in canisters and submitted for VOC analysis. Subsurface water vapor samples will be collected on silica gel in sealed columns and submitted for tritium analysis.

Borehole geophysics may be performed in the open borehole. Logging will be performed using the LANL owned geophysical logging trailer per ECR SOP-5.07, *Operation of LANL Owned Borehole Logging Trailer,* and contract geophysical logging per ECR SOP-4.04, *Contract Geophysical Logging,* which can provide additional data for tuff matrix (vadose zone) characterization, such as porosity, saturation, and matrix potential. Neutron logs at 1-ft intervals may be collected to determine the borehole moisture content. The downhole camera may also be used to delineate lithologic contacts and augment fracture characterization studies.

4.3 Postsampling Tasks

After drilling and sampling activities are completed at the borehole, the steel surface casing will be fitted with a standard surface-mount steel well cover to secure the borehole. The cover will allow access for future sampling before the borehole is abandoned or converted to a monitoring well while preventing rain water from entering the borehole. If perched water or elevated contaminant concentrations in pore-gas are encountered, the borehole will be used as a monitoring well in accordance with the requirements of Section X.C of the Consent Order to collect vapor or groundwater samples. If a monitoring well is installed, it will also be secured with a cover and lock. Future monitoring and sampling activities are not included in this implementation plan. If abandonment of BH 6 is required, ECR SOP-5.03, *Monitoring Well and RFI Borehole Abandonment* will be implemented in accordance with the requirements of Section X.D of the Consent Order. Drill cuttings, contaminated personal protective equipment (PPE), purge water,

sampling supplies, returned analytical samples, and all other wastes that may have come into contact with contaminants will be managed as investigation-derived waste. All waste generated from these activities will be handled and stored in accordance with the waste management plan in Appendix C of the NMED-approved MDA T investigation work plan (LANL 2004, 85641).

5.0 ADMINISTRATIVE CONTROLS

The ACs are organization and management provisions that ensure safe operation of an activity. These provisions include safety requirements and procedures, record keeping, review and auditing, reporting, physical barrier protections, and safety management programs (SMPs). Section 5.6 lists each of the 16 SMPs.

5.1 Purpose

The purpose of ACs is to ensure safe conduct of NES S&M activities at MDA T. This plan addresses S&M activities related to the site surveys, drilling, and sample collection activities being performed during implementation of the MDA T investigation work plan.

5.2 Organization and Management Responsibility

Lines of authority, responsibility, and communication are organization and management responsibilities that have been established by the first-line supervisor to ensure safe operation of the NES S&M activities. These lines of authority are defined in the DSA for S&M activities at the NES (LANL 2004, 88713). The Facility-Tenant Agreement (FTA) between ENV Division and ENV-ECR Group formalizes the interface, communication, mutual understanding, roles, responsibilities, accountabilities, and applicable requirements that must be implemented by the two parties.

The Laboratory Director, who is responsible for the overall safe operation of the Laboratory, delegates organization and management responsibilities to the RDL for NES S&M activities (LANL 2005, 88713.2). There are three RDLs for this work because of site access and site ownership issues. The RDL who controls the area outside of the MDA T fence is the RDL for the Balance of Plant. The RDL who controls the area between the MDA T perimeter fence and the NES boundary is the Nuclear Waste and Infrastructure Services (NWIS) RDL. These two RDLs allow access to the NES site through facility tenant agreements with ENV-ECR. The RDL who controls the NES area is assigned by the ENV Division.

The RDL for NES S&M activities is responsible for conducting NES S&M activities in accordance with approved TSRs; facilitating and controlling changes in NES S&M activities; and coordinating the activities of work groups performing NES S&M activities; ensuring that a list of key personnel (management, technical, and other support personnel) by name, title, and telephone number is maintained; and ensuring that NES S&M activities are carried out by qualified workers according to written procedures. The RDL and other responsible managers will ensure there are a sufficient number of qualified personnel from Health, Safety and Radiation (HSR) 1 for radiation safety and HSR-5 for industrial hygiene to support the field activities at the MDA T NES. Figure 5.2-1 of this document presents the line of authority for NES S&M activities at MDA T. The MDA T site-specific health and safety plan (SSHASP) lists the responsibilities as well as the lines of communication for emergency response.

5.3 Technical Safety Requirements

Each of the S&M TSRs (LANL 2005, 88713.64) is applicable to the planned characterization activities at the MDA T NES. Section 5.6 describes how the TSRs apply and how the implementing strategies will address the TSRs during the characterization of MDA T. All changes to the TSR document require DOE approval before implementation.

TSR violations, should they occur, result from one or more of the following four circumstances:

1. exceeding a safety limit;
2. failing to complete an action statement within the required time limit after a limiting control setting is exceeded, or failing to comply with a limiting condition for operation;
3. failing to perform a surveillance requirement within the required time limit; and
4. failing to comply with an AC statement.

   (Note: Failing to comply with an AC statement is a TSR violation when either the AC is directly violated [for example, if minimum staffing requirements are not met] or the intent of a referenced program is not fulfilled and the failure to meet the intent of the referenced program is significant enough to render the barrier analysis summary invalid.)

If a TSR violation occurs, the following actions will be taken:

1. Ensure that a safe condition is established.
2. Notify the DOE of the violation in accordance with Laboratory Implementation Requirements (LIR) 402-130-01, "Abnormal Event Reporting," and other appropriate Laboratory reporting requirements (Figure 5.3-1).
3. Prepare an occurrence report in accordance with LIR 402-130-01, "Abnormal Event Reporting," and other appropriate Laboratory reporting requirements.

In the event of an emergency or overriding security concerns, the emergency action response can depart from the TSRs. These actions shall be taken only when (1) no actions consistent with the TSRs are immediately apparent, (2) actions are immediately needed to protect the health and safety of workers, (3) actions are immediately needed to protect the health and safety of public, and/or (4) actions are immediately needed to protect the environment. These emergency actions shall be taken **only** by personnel trained and qualified for the equipment or systems needed to perform the actions. Per section 5.3.1 of the TSR document: *If emergency actions are taken, NNSA, Los Alamos Site Office, shall be notified verbally and the Cognizant Secretarial Officer shall be notified in writing within 24 hours.*

5.4 Procedures

Procedures to meet the AC requirements and the intent of the applicable SMPs are in place and will be implemented. The procedures provide sufficient direction to ensure that the NES S&M activities are performed in accordance with the TSR and that they are performed in a safe manner that protects the worker, the public, and the environment.

The ENV-ECR Group has an approved quality program that is in accordance with 10 CFR 830 Subpart A, DOE Order 414.1, and the Laboratory's Institutional Quality Management requirements, as outlined in Laboratory Performance Requirement (LPR) 308-00-00. The quality program is implemented through quality procedures (QPs) and SOPs that address the essential aspects of the work to be conducted at the

MDA T NES. Any new or modified procedures must undergo the unreviewed safety question (USQ) process discussed in Section 5.6.3 before implementation. The quality program and procedures are discussed further in Section 5.6.6 of this document.

The project manager, university technical representative (UTR), and a Laboratory training specialist will review the Laboratory training guidelines (https://erinternal.lanl.gov/resources/training.shtml) and determine the appropriate task-specific procedures for all personnel conducting activities at the MDA T NES. Job-specific training matrices will be developed and will list the QPs, SOPs, and other procedures to which personnel will be trained and will implement while carrying out the NES S&M activities at MDA T. The training matrices will be used in the table-top analysis of the work process, which will verify that the training requirements for each worker's defined role are appropriate. Personnel will also be trained to the DSA, TSR, SSHASP, integrated work document (IWD) and other appropriate documents. Copies of all the applicable procedures and work documents listed in the MDA T NES training matrices will be maintained on-site in the field trailer and will be available to site personnel for review.

5.5 Review and Audit

The Laboratory Management Assessment and Management Safety Walk-Around Programs will be followed. The startup and restart of planned activities at the NES will be evaluated using a management self-assessment (MSA) approach. This requirement will be implemented in accordance with LIR 300-00-08.1, *Startup/Restart of Laboratory Facilities/Activities,* and with ECR QP-5.18, *Readiness Planning and Review for NES.* Field work will not be conducted at the MDA T NES until readiness has been demonstrated and approved by the RDL and the NNSA review (if necessary) is complete. Once field work begins, one or more management safety walk-around reviews will be conducted by the UTR. Training documentation and qualification records may be reviewed as part of the audit process.

5.6 Safety Management Programs

SMPs are Laboratory programs that ensure the safety of workers, the public, and the environment. They provide the framework for implementing ACs to ensure safe operation for NES S&M activities. A total of 16 Laboratory SMPs apply to all NES S&M activities described in the DSA and TSR documents (LANL 2004, 88713.2; LANL 2005, 88713.64). Failure to meet the programmatic intent of the SMPs during the conduct of activities at an NES constitutes a TSR violation.

The following subsections define the different SMPs specific to NES S&M activities and briefly discuss how they will be implemented during the sampling and drilling activities at the MDA T NES.

5.6.1 SMP 1: NES S&M Program

The NES S&M program is the primary SMP. The intent of this program is to protect the integrity of the Inventory Isolation System (in other words, to prevent the breaching of or removal from the tops or sides of disposal units [absorption beds and shafts]). The proposed drilling and sampling activities are part of the NES S&M program. The NES S&M program helps to maintain current NES waste isolation characteristics. The S&M program includes elements discussed in the subsections below. The first part of the discussion for each subsection is guidance taken directly from the TSR document (LANL 2005, 88713.4) and is presented in *italics;* the second part of each subsection addresses the S&M activities specific to the characterization of MDA T.

5.6.1.1 Prohibition to the Addition of Hazardous Materials Program

The requirements for the prohibition to the addition of hazardous materials at a NES as stated in the TSR document follows:

The addition of HAZARDOUS MATERIALS by S&M activities to the NES inventory SHALL be prohibited in all of the NES locations, with the exception of temporary, radioactive, sealed sources for calibration or measurement used to support S&M activities; chemical/toxic materials that are used in support of S&M activities in quantities less than 40 CFR 302 limits; and hydraulic fluids, fuels, lubricants, and other substances that are needed for operation of vehicles or equipment on site but will be there only as long as the vehicles or equipment are in use.

Note: *This control is a "directive-language AC" and does not fall under the provisions regarding program intent and invalidation of the barrier analysis summary as described in section 5.3.3, Violation of TSR. Moreover, any noncompliance with this AC results in immediate TSR VIOLATION.*

Basis: This prohibition is intended to preclude any permanent additions to the radiological or hazardous inventory of the NES. However, it is important to differentiate between the inventory of the NES that comprises the radiological and hazardous chemicals that were disposed of when the NES was an active disposal facility from the potentially hazardous materials that are needed to support S&M activities and will be on site temporarily.

The introduction of additional HAZARDOUS MATERIALS by S&M activities other than the excluded materials identified above is outside the safety envelope defined by the DSA/TSRs. Specifically, the DSA/TSRs and associated analysis techniques assume that the NES are inactive waste sites and are in the S&M phase of their life cycle. Addition of HAZARDOUS MATERIALS beyond what is currently in inventory would change the operational status for the NES and could potentially affect site-hazard categorization.

Activities to Address Prohibition to the Addition of Hazardous Materials

No hazardous materials will be brought on to the MDA T NES, with the exception of those contained within the field vehicles and/or drill rig (e.g., hydraulic fluids, fuels, lubricants) or radioactive materials necessary for monitoring and testing (e.g., radiological instrument sealed check sources, borehole geophysical tools). Site-specific training will be conducted before sampling activities start to ensure that all project participants are aware of this restriction, and satisfactory completion of this training by project personnel will be documented.

5.6.1.2 Vegetation Maintenance

The requirements for vegetation maintenance as stated in the TSR document follows:

Vegetation maintenance, including mowing, clearing brush, removing debris, and cutting trees, SHALL be performed at NES as needed. If tree stumps require removal, they can be ground down to grade, but SHALL not be removed by digging, pulling, or pushing.

Basis: Removal of excess vegetation limits the amount of combustible material available to sustain a fire. Therefore, the potential is minimized for a fire that could impact the waste contained at an NES and cause a release of HAZARDOUS MATERIALS.

Note: *Vegetation maintenance must strike a balance between requirements to minimize the threat of fire with requirements to maintain surface characteristics for adequate erosion control.*

Activities to Address Vegetation Maintenance

The MDA T NES surface is covered with shrubs and grasses. Vegetation maintenance activities will probably be necessary to most efficiently perform the geodetic, geophysics, and radiological surveys. The vegetation will be cleared using a mower such as a brush hog or sickle bar. Certain areas within the NES may need to be cut using hand trimmers. If necessary, the cut vegetation will be placed in an area, or areas, that will not create tripping, fire, or any other types of hazards. No cut vegetation will be removed from MDA T. Mowing with the above equipment will improve access and reduce the fire hazards associated with tall grasses. Mowing will not kill the vegetation, so the erosion protection provided will be maintained.

5.6.1.3 Erosion Control Measures

The requirements for erosion control as stated in the TSR document follows:

Erosion control measures, including the maintenance of surface and near-surface soil, overburden, and caps and covers and the use of water diversions SHALL be implemented at NES as needed.

Basis: By diverting runoff away from waste locations and by ensuring that adequate cover material is maintained over the top of waste, erosion control measures minimize the ability of wind and water to degrade (by wear/ removal of cover material, leaching, or the transport of constituents) the integrity of the Inventory Isolation System. Thus, erosion control measures preserve the integrity of the Inventory Isolation System and minimize the potential for HAZARDOUS MATERIALS release.

Activities to Address Erosion Control Measures

The current soil erosion potential of the site is very low. This determination is based on the existing vegetation, the levelness of the site, and the engineering controls that reroute runoff from areas upslope of MDA T (LANL 2005, 89518). The planned investigation activities will not significantly change any of these conditions. A surveillance of the site will be conducted per ENV QP-8.4, *Inspection and Maintenance Requirements for Nuclear Environmental Sites,* to ensure that prejob conditions are restored following field activities.

Erosion control measures are not anticipated to be necessary at the MDA T NES because permanent diversion structures immediately outside the NES prevent run-on to the site. Additionally, the NES surface is fully vegetated. Sufficient vegetation, run-on controls, and adequate cover are currently in place to prevent water from flowing directly over the absorption beds and shafts.

5.6.1.4 Access Control and Maintenance Measures

The requirements for access control and maintenance measures as stated in the TSR document follows:

Access control and maintenance measures, including installation and repair of fencing and signage; upkeep, repair, and construction of roads, parking areas, storage areas, and walkways; removal of snow, mud, and other debris; and personnel/vehicle access requirements SHALL be

implemented at NES as needed. If activities require leveling or other surface preparation, such preparation SHALL be accomplished by addition of material, not by grading or removal of existing material.

Basis: Access control (with its attendant maintenance of access control features) ensures that only authorized personnel and vehicles are allowed to enter a site, that only authorized activities occur, that only defined access routes can be used, and that access routes are well-maintained. As a result, access control (and maintenance of access control features) limit the potential for personnel to come in contact with HAZARDOUS MATERIALS, limit the potential for degradation (by wear or unauthorized removal of cover material and subsequent erosion) of the Inventory Isolation System, and minimize the potential for HAZARDOUS MATERIALS release.

Activities to Address Access Control and Maintenance Measures

A perimeter chainlink fence surrounds most of MDA T and the NES within the MDA T boundary. A small part of the NES is outside the fence (Figure 3.0-1). To further control this portion of the NES, stanchions, rope, and postings identifying the area as part of the NES will be used to limit access. The rope, stanchions, and postings will be inspected, at a minimum, each morning before the start of the day's work as part of the daily safety inspection.

A second gate has been installed in the western MDA T perimeter chainlink fence so that the drill rig may have direct access to the NES borehole location without traveling over the absorption beds or shafts. A temporary boundary fence or rope will be placed along the NES perimeter (within the MDA T chainlink fence). The rope will be posted with signs identifying it as the NES boundary and restricting the area to authorized personnel only. Concrete-base poles or cones will serve as structural support for the fence or rope. The ground will not be disturbed when installing the fence along the NES boundary. The NES boundary, including any rope fence, stanchions, and postings will be inspected, at a minimum, each morning before the start of the day's work as part of the daily safety inspection.

MDA T has two access points, each of which is controlled with a locked gate. Only personnel who have satisfied the requirements for their defined role, as documented in the MDA T training matrix for their position, will be considered authorized NES personnel. Entrance to the MDA T NES will be limited to only MDA T NES authorized personnel. ENV-ECR, either directly or through its subcontractors performing S&M activities at the site, will maintain control of these access points. A formal HAZWOPER exclusion zone (EZ), contamination reduction zone (CRZ), and support zone (SZ) will be established in accordance with Occupational Safety and Health Administration (OSHA) regulations 29 CFR 1926.65. Work zones will be demarcated with fencing or barrier tape and postings. The EZ will be established within the existing MDA T fence. The entire fenced area is also a posted radiological controlled area (RCA) boundary. Only authorized personnel that meet training and entry requirements will be allowed access to the EZ or RCA. The CRZ is for the area where contamination monitoring of staged waste and field personnel will be performed to prevent the spread of contamination outside of the EZ. It will be located just outside the MDA T fence. The SZ, or clean area, will be located outside the NES boundary in the parking lot to the east of Building 21-150.

The surface of the MDA T NES will not require any leveling or access road construction. No activities are required for maintenance equipment to gain access to the area of BH 6.

5.6.1.5 Drilling Controls

Drilling SHALL be controlled to prevent the disturbance of buried inventory in waste disposal units. The requirements, taken directly from the TSR document for drilling (LANL 2005, 88713.64) are discussed in the following subsections.

(a) Predrilling Location Evaluation

All applicable information available (such as site maps, historical logs, construction drawings and diagrams, disposal records, ground-penetrating radar inspections, geophysical or other existing surveys) SHALL be reviewed and new surveys SHALL be conducted as needed to ensure that the location of disposal units is characterized before drilling begins. Because of differences among the NES, the pre-drilling location evaluation will utilize existing information where available and will be augmented by new studies or inspections as necessary to ensure that the location of the drilling relative to the disposal unit is clearly specified.

The Pre-drilling location evaluation control criteria, to ensure that the Inventory Isolation System of a waste disposal unit remains intact, SHALL be developed and established in approved implementing documents prior to initiation of drilling activities.

Note: *This control is a "directive-language AC" and does not fall under the provisions regarding program intent and invalidation of the barrier analysis summary as described in section 5.3.3, Violation of TSR. Moreover, any noncompliance with this AC results in immediate TSR VIOLATION.*

Activities to Address Predrilling Location Evaluation

The engineering drawings used during development of the NMED-approved MDA T investigation work plan (LANL 2004, 85641) and borehole logs from the 1996/1997 RFI characterization drilling provided the basis for defining the location of the buried inventory present at the MDA T NES. The features of the Inventory Isolation System at the MDA T NES are defined in the DBM (LANL 2005, 89565). Geophysical surveys have been performed to verify and confirm the location of the waste disposal units. Global-positioning-system (GPS)-based electromagnetic (EM)-31, EM-61, ground penetrating radar (GPR), and radio frequency pipe locator surveys were performed. These survey results did not conclusively show absorption bed or disposal shaft boundaries.

As discussed in Section 4.1 above, past boreholes have established the location of the RWSA. To ensure that the drilling and sampling do not impact the inventory isolation system, BH 6 must be drilled within the former RWSA excavation, which was dug and used following creation of the disposal shaft field and absorption beds. Drilling within the RWSA precludes locating the drill rig over the absorption beds or the disposal shafts. A licensed surveyor will relocate historic borehole 21-05057 using coordinates for the location in the ENV-ECR Group database. BH 6 will be drilled west of this location. Locating BH 6 in this manner ensures that no inventory will be impacted by drilling operations while the necessary data can still be collected to characterize the releases from the absorption beds, disposal shafts, and the RWSA, as required in the NMED-approved MDA T investigation work plan (LANL 2004, 85641). Should BH 6 require redrilling, the new location will be to the west to ensure continued protection of the Inventory Isolation System.

(b) Location Evaluation during Angle Drilling

During angle drilling, down-hole instruments or an appropriate alternative SHALL be used to demonstrate that the active drilling is proceeding according to plan.

Location evaluation during angle drilling control criteria, to ensure that the Inventory Isolation System of a waste disposal unit remains intact, SHALL be developed and established in approved implementing documents prior to initiation of drilling activities.

Note: *This control is a "directive-language AC" and does not fall under the provisions regarding program intent and invalidation of the barrier analysis summary as described in section 5.3.3, Violation of TSR. Moreover, any noncompliance with this AC results in immediate TSR VIOLATION.*

Activities Addressing Location Evaluation during Angle Drilling

No angled boreholes will be drilled as part of this investigation; therefore, no specific activities are required to address this TSR.

(c) Monitoring and Measurements of Work Environment and Vicinity During Drilling

Personal Protective Equipment (PPE) and area monitoring for radiological or hazardous materials will be specified in work control documents such as Radiation Work Permits (RWP) and Integrated Work Documents (IWD) as appropriate for the hazards that could be encountered during drilling.

Monitoring and measurements of work environment and vicinity during drilling control criteria, to ensure protection of the worker and to minimize potential releases to the environments, SHALL be developed and established in approved implementing documents prior to initiation of drilling activities.

Note: *This control is a "directive-language AC" and does not fall under the provisions regarding program intent and invalidation of the barrier analysis summary as described in section 5.3.3, Violation of TSR. Moreover, any noncompliance with this AC results in immediate TSR VIOLATION.*

Activities to Address Monitoring and Measurements of Work Environment and Vicinity during Drilling

The monitoring and measurements of the work environment are the responsibility of all site workers, as well as HSR-12, HSR-1, the project radiation control technician (RCT), and the SSO. HSR-12 certifies that all instruments used are calibrated to required calibration standards before the RCT uses the instrument in the field. HSR-1, the site RCT, and all site workers are responsible for the implementing the site radiological work permit (RWP). The engineering control requirements for monitoring the safety of workers conducting S&M activities at the MDA T NES will be specified in the SSHASP, IWD, and RWP. Table 5.6-1 of this document summarizes the monitoring and measurement control requirements, including the hazardous conditions, the instrument used to monitor the hazardous conditions, calibration requirements, action levels, and response actions.

Each worker has been assigned a site-specific MDA T training matrix (Section 5.4). The SSHASP, RWP, and IWD stipulate adequate protection for the workers against the known hazards at the MDA T NES.

Health and safety and radiological monitoring will be conducted by both the RCT and SSO during drilling in accordance with the SSHASP, RWP, and IWD, and if radiological or chemical hazards change, the PPE requirements and other controls will be re-evaluated to ensure the health and safety of workers.

(d) Monitoring and Measurements of Exhumed Material and Prevention of Contamination

Exhumed material (including cuttings and core) SHALL be evaluated for radioactive and hazardous chemicals and to determine the nature of the material matrix immediately after the material is brought to the surface.

Monitoring and measurements of exhumed material and prevention of contamination control criteria, to ensure that the Inventory Isolation System of a waste disposal unit remains intact, SHALL be developed and established in approved implementing documents. If radiological or hazardous chemical criteria are exceeded, if the material is determined not to be tuff or other native material, or if unexpected conditions develop, drilling SHALL be stopped immediately in a safe manner. Drilling SHALL continue only after it is determined that a disposal unit has not been breached. If a disposal unit has been breached, drilling in that hole will be terminated permanently and the hole will be stabilized. Exhumed material will be handled according to the Radioactive and Hazardous Waste Management Program (described below under the Safety Management Programs) and a thorough evaluation will be conducted to determine why a disposal unit was breached.

Note: *This control is a "directive-language AC" and does not fall under the provisions regarding program intent and invalidation of the barrier analysis summary as described in section 5.3.3, Violation of TSR. Moreover, any noncompliance with this AC results in immediate TSR VIOLATION.*

Activities to Address Monitoring and Measurements of Exhumed Material

Exhumed material, including core and cuttings, will be monitored for radioactive and hazardous chemicals immediately after it is brought to the surface. Radioactive and hazardous material limits for exhumed material have been established and are presented in the SSHASP, RWP, and IWD. The person in charge (PIC) will contact the UTR and inform him/her of the suspension of drilling if action levels are exceeded. For radiological concerns, the RCT pool supervisor will determine what PPE and engineering upgrades are required to continue working. Following upgrading PPE and or engineering controls, the UTR and RCT pool supervisor will approve continued drilling. Figure 5.6-1 illustrates the evaluation and monitoring of exhumed material for each drill run.

Screening and monitoring of the core and cuttings will be carried out for each 5-ft run. The types and methods of monitoring will include (1) visual examination of cuttings and cores for material associated with the disposal units, (2) radiological monitoring for gross alpha, beta and gamma, and (3) headspace vapor screening for VOCs using a photoionization detector. In addition, field personnel will monitor the drilling conditions for suspicious or unexplained events. An example of an unexplained event would be drilling to refusal at depths of 10 to 15 ft, indicating an unforeseen geological formation or structure. This process will ensure that any unexpected condition is immediately identified, evaluated, and documented before the borehole is advanced further.

If action levels are exceeded during drilling, operations will be suspended to evaluate the conditions and determine whether the Inventory Isolation System has been breached. If material associated with the

disposal units is identified in the core or cuttings, a stop work will be called and the Laboratory will initiate the formal reporting process according to LIR 402-130-01, *Abnormal Events*, and Notice No. 0139. If all monitoring results are below action levels, drilling will proceed.

If BH 6 has to be abandoned because of exhumed material, a new borehole will be drilled 10 to 15 ft northwest of BH 6 within the RSWA.

(e) Controlling the Rate of Material Removal

The size of the borehole and rate of drilling will be controlled to ensure that material will be removed at such a rate as to allow continuous or near continuous evaluation of exhumed material and to minimize the amount of contaminated material that could potentially reach the surface.

The Control the rate of material removal control criteria, to ensure that the quantity of hazardous or radioactive material brought to the surface is minimized and controlled, SHALL be developed and established in approved implementing documents prior to initiation of drilling activities.

Note: *This control is a "directive-language AC" and does not fall under the provisions regarding program intent and invalidation of the barrier analysis summary as described in section 5.3.3, Violation of TSR. Moreover, any noncompliance with this AC results in immediate TSR VIOLATION.*

Activities to Address Controlling the Rate of Material Removal

The rate and volume of exhumed material generated for each foot drilled is primarily controlled by the type of drill rig, the diameter of the borehole, the type of media through which the hole is drilled, and the speed of advancement of the auger. An HSA drill rig will be used to drill a 9-in.-diameter borehole into the tuff to a minimum depth of 280 ft. Figure 3.0-1 shows the approximate borehole location and site map, and Section 4.2 describes the drilling specifications.

Drill cuttings and core must be monitored for radiological and hazardous constituents as well as visually every 5 ft drilled. The drilling process will stop after each 5 ft run to retrieve and monitor the core, as discussed in Section 5.6.1.5, Item (d). Based on the monitoring activities discussed in 5.6.1.5, Item (d) and the screening process shown in Figure 5.6-1, the rate of drilling is controlled by the required steps of the work process. Following these steps will ensure the rate of material removal will be limited to a 5ft section of 4-in.core.

After the cores are retrieved, monitored, and logged, samples will be containerized and submitted to an analytical laboratory as discussed in Section 4.2. The remaining core will be containerized and managed as investigation-derived waste. Drill cuttings will be collected and stored outside the NES boundary in accordance with the waste management plan in Appendix C of the NMED-approved MDA T investigation work plan (LANL 2004, 85641). The field screening and analysis of the core material associated with the drill cuttings will be used to determine the proper handling and segregation of cuttings; disposal of cuttings will be based on analytical data.

(f) Dust Control Program

Dust from drilling operations SHALL be controlled as needed to minimize hazards to workers, the public, and the environment.

The Dust control criteria, to ensure that the hazards to the worker, the public, and the environment are minimized and controlled, SHALL be developed and established in approved implementing documents prior to initiation of drilling activities.

Note: *This control is a "directive-language AC" and does not fall under the provisions regarding program intent and invalidation of the barrier analysis summary as described in section 5.3.3, Violation of TSR. Moreover, any noncompliance with this AC results in immediate TSR VIOLATION.*

Activities to Address Dust Control

Drilling activities may generate minor amounts of dust; however, this dust is anticipated to be a limited threat at the MDA T NES. The HSA drilling technique being implemented produces little dust because the drilling method brings cuttings to the surface by the rotation of the augers rather than forced circulation. Dust may be generated from shoveling cuttings in the vicinity of the borehole collar, processing screened core, and conducting other activities at unimproved drill sites. If the dust levels exceed those prescribed in the SSHASP, engineering controls will be implemented to reduce exposure to dust.

If the borehole needs to be drilled to a depth greater than what can be achieved using the HSA technique, an air-rotary drill rig will be used. A dust suppression system that processes the air through an air filter before release to the atmosphere will be used with this drilling method.

The SSO and RCT will perform continuous dust monitoring of the workers' breathing zone in accordance with the requirements of the SSHASP, RWP, and IWD during all drilling activities at the MDA T NES. If the dust action levels specified in the SSHASP and IWD (and presented in Table 5.6-1 of this document) are exceeded, drilling will be suspended, and the UTR and PIC will be contacted immediately. Work will resume only if proper engineering controls are implemented. If weather conditions such as high winds generate dust at levels exceeding those specified in the SSHASP and IWD, work will be suspended and restarted after weather conditions have stabilized.

(g) Breaching the Disposal Unit

Breach of a disposal unit by drilling is an Authorization Basis Violation. This constitutes a condition that is outside of the Safety Envelope established in the Documented Safety Analysis (DSA).

Basis: By ensuring that the disposal unit boundaries are known before drilling commences, that materials are removed at a rate that allows real-time or near real-time monitoring for radiation and other hazards, drilling controls minimize the potential for a drill to inadvertently affect inventory in a waste disposal unit. Such controls prevent a release of HAZARDOUS MATERIALS, provide assurance that the Inventory Isolation System remains intact, and provide warning of a system breach, thus minimizing the potential for a release and lessening the severity of a release should one occur.

Activities to Address Breaching the Disposal Unit

A visual inspection of the core and cuttings will be conducted at all times during drilling. If material associated with the disposal units is identified in the core or cuttings, drilling will be suspended and the Laboratory will initiate the formal reporting process according to LIR 402-130-01, *Abnormal Events*, and

Notice No. 0139 as described in Section 5.3.4.Figure 5.3-1 shows the flow of notifications that will be followed in the event of a disposal unit breach.

5.6.1.6 Sampling/Surveying Measures

The TSR document states the following:

> *Sampling/survey measures SHALL be implemented at NES as needed to determine if HAZARDOUS MATERIALS migration or significant changes in surface and subsurface conditions have occurred and to confirm that the integrity of the Inventory Isolation System is not compromised. Sampling/survey activities SHALL consist of an appropriate combination of soil/sediment, air, biota, penetrating radiation, vapor and soil moisture, and water sampling, and of general, geophysical, and radiological surveys as needed on a site-specific basis.*
>
> *Basis: Sampling/surveying of multiple sources at NES provides the ability to monitor migration of HAZARDOUS MATERIALS and significant changes in surface and subsurface conditions and to ensure the integrity of the Inventory Isolation System. Furthermore, sampling provides tracking, trending, and warning of potential breach of the Inventory Isolation System and thus prompts the implementation of necessary corrective measures to minimize or prevent degradation of the Inventory Isolation System and subsequent release of HAZARDOUS MATERIALS.*

Activities to Address Sampling/Survey Measures

The sampling and surveying activities at MDA T NES will provide data that will support the continued environmental characterization of MDA T and will be conducted in accordance with Section IV.C.2.e of Consent Order and the NMED-approved MDA T investigation work plan (LANL 2004, 85641). Sampling data will assist with confirming the location and integrity of the Inventory Isolation System. Geodetic and geophysical surveys within the NES boundary will help confirm the locations of the absorption beds and disposal shafts. A radiological survey will determine if there is elevated radioactivity on the surface of the NES. Core sampling from the non-NES boreholes and BH 6 will be used to characterize the lateral and vertical extent of hazardous and radiological contamination adjacent to the MDA T NES.

5.6.1.7 Geological Mapping

The TSR document states the following:

> *Geological mapping, including general-surveying, geologic-mapping, and visual-observation techniques SHALL be used as needed at NES to assess and document current geologic status and the effects of erosion or geologic events on NES surface or subsurface characteristics.*
>
> *Basis: Performing mapping and location surveys provides information about changes to older features and structures. This information can be used to coordinate sampling activities, identify sampling locations, and verify the accuracy of previously gathered information. This information is valuable in determining if physical changes are such that the Inventory Isolation System integrity could be breached, and this information is used as an input to the drilling process to ensure that drilling activities do not penetrate the Inventory Isolation System. Therefore, mapping supports the minimization of the Inventory Isolation System's potential for degradation and subsequent release of HAZARDOUS MATERIALS.*

Activities to Address Geological Mapping

The geology and stratigraphy of MDA T and the surrounding area are generally understood based on previous investigations. No other geologic mapping will be performed, and no specific activities are presented in this implementation plan to address this TSR.

5.6.1.8 Visual Inspections

The TSR document states the following:

> *Visual inspections SHALL be conducted at NES, at least annually and in response to nonroutine natural phenomena, such as heavy rains and lightning, and to events such as traffic accidents or reported unusual or suspicious activities. These inspections evaluate NES features and surface expressions, assess changes in the physical attributes of NES, and assess physical damage such as corrosion, erosion, collapse, or settlement. Visual inspections also include inspecting existing structures and access controls (signage and fences) to determine their integrity.*
>
> ***The Visual inspections frequency (not less than annually) and criteria SHALL be developed and established in approved implementing documents.***
>
> ***Note:*** *This control is a "directive-language AC" and does not fall under the provisions regarding program intent and invalidation of the barrier analysis summary as described in section 5.3.3, Violation of TSR. Moreover, any noncompliance with this AC results in immediate TSR VIOLATION.*
>
> *Basis: Periodic visual inspections at NES monitor surface conditions and the integrity of the Inventory Isolation System. Thus, visual inspection provides tracking, trending, and warning of a potential breach of the Inventory Isolation System and of conditions with the potential to impact system integrity. As a result, corrective measures can be taken and the potential for the degradation of the Inventory Isolation System and subsequent release of HAZARDOUS MATERIALS can be minimized.*

Activities to Address Visual Inspections

Visual inspections of the MDA T NES will be conducted annually at a minimum in accordance with ECR QP-8.4 *Inspection and Maintenance Requirements for Nuclear Environmental Sites.* A prejob inspection will document conditions at the site before carrying out S&M activities. Postjob inspections will ensure that the site is returned to near-original conditions once work is completed. Visual inspections will be documented in the field logbook and/or the field site closeout checklist in accordance with ECR SOP-01-12, *Field Site Closeout Checklist.*

The planned non-intrusive surveys and drilling and sampling of one borehole are not anticipated to significantly impact the surface at the MDA T NES. Annual or other frequency surveillance inspections are not within the scope of the drilling activities covered by this implementation plan. However, if site personnel note changes in site conditions due to activities other than those covered in this implementation plan, the nuclear operations manager will be notified and additional inspections will be conducted if warranted.

5.6.2 SMP 2: Integrated Work Management

The TSR document states the following:

An integrated work management (IWM) program consists of HAZARD analysis, procedures/work packages/site-specific safety and health plans, pre- and post-job briefings, worksite walk downs, prioritization, planning, scheduling, work authorization and release, and worker check-in SHALL be used for NES S&M activities. The most important aspects of this process are the direct involvement of workers in controlling the risks, and the accountability of RDLs and Responsible Line Management (RLM) for safety, security, and environmental protection.

Appropriate work management ensures the proper coordination of work activities, such that conflicts and potentially negative impacts are removed or mitigated appropriately, and it ensures that procedures, equipment, and personnel are prepared and ready to perform work. Such programs reduce the likelihood of worksite mishaps that could degrade or breach the Inventory Isolation System; these programs thus minimize the potential for hazardous materials release.

Activities to Address SMP 2

To ensure a safe and secure environment, work at the MDA T NES will be conducted in accordance with an approved IWD, as required by the Laboratory's integrated wok management (IWM) process (Implementing Procedure [IMP]-300.2, *Integrated Work Management for Work Activities*), an approved SSHASP, and an approved RWP. These safety documents characterize the hazards and risks associated with the facility and work activities and identify mitigating measures that will be taken to protect the workers, public, and environment.

5.6.3 SMP 3: Unreviewed Safety Question Program

The TSR document states the following:

The USQ process SHALL be required for

- *all temporary or permanent physical changes at the NES,*
- *all temporary or permanent changes to procedures at the NES,*
- *all activities, operations, tests, or experiments that are new to the NES, and*
- *discoveries of potential inadequacies in the existing NES DSA.*

The USQ process SHALL apply not only to changes within the boundary of a NES, but also to changes outside the boundary when those changes have the potential to affect the safety of the operations within the boundaries.

The NES USQ program SHALL ensure that changes to NES physical attributes, S&M activities and procedures, and modifications to components are analyzed against the DSA with respect to frequency, consequences, and safety margin to determine if the change falls within the existing safety envelope or if it requires approval through the USQ process. The NES USQ program SHALL ensure that controls currently in place remain effective and that any additional controls necessary to the safety basis of the NES are identified as necessary. The NES USQ program SHALL preclude accidents from occurring by ensuring that physical changes and new activities are sufficiently safe and all necessary safety controls are in place for those, as yet, unidentified changes and activities that may occur in the future at the NES. As required by 10 CFR 830.203, a summary of all USQ determinations and positive USQs SHALL be submitted to DOE annually for changes that have been implemented since the last submittal.

Activities to Address SMP 3

All USQs will be handled in accordance with the requirements of OST 300-00-06B, *USQ Screening and Determination Procedure*. The USQ process will be completed before drilling and sampling activities begin to evaluate whether these activities are within the defined safety basis envelope.

5.6.4 SMP 4: Nuclear Criticality Program

The TSR document states the following:

> *To provide protection from the occurrence and consequences of a nuclear criticality accident, worker health and safety at the NES SHALL be assured for S&M activities with a potential for nuclear criticality by addressing activities that may involve significant quantities of fissile materials. The NES Nuclear Criticality program SHALL ensure criticality safety through the following:*
>
> - *Identification of the criticality hazards,*
> - *Identification of control measures, such as mass, geometry, or volume, to maintain subcriticality of NES S&M activities,*
> - *Documentation of established and/or revised criticality limits and controls for NES S&M activities, and*
> - *Employee education and training on criticality limits and controls.*
>
> *The NES Nuclear Criticality program SHALL minimize the likelihood of an inadvertent criticality by providing for criticality safety evaluations and the establishment of criticality safety limits.*

Activities to Address SMP 4

A criticality review was performed for drilling of a borehole inside the NES at MDA T (Appendix A). The proposed S&M activities at the MDA T NES have been determined to have no potential for nuclear criticality, based on the fact that the inventory is not in a critical configuration or at high enough specific activities. Criticality would require concentrating the fissile material in the MDA T inventory, which the drilling process is incapable of doing. Before intrusive work within the NES begins, the field team will be briefed on the controls listed in the criticality review, which will be incorporated into the daily work process. An HSR-6 review concurred with the conclusion that there is no credible criticality accident risk with this operation (Monahan 2006, 92186).

5.6.5 SMP 5: Radiation Protection Program

The TSR document states the following:

> *The NES Radiation Protection program SHALL ensure that employees, contractors, subcontractors (for example, maintenance subcontractors), visiting scientists, DOE or Department of Defense personnel, and any other personnel who perform work at the NES sites conduct their work such that radiation doses resulting from their work are kept as low as reasonably achievable (ALARA). The NES Radiation Protection program SHALL include the following elements that are combined to accomplish the ALARA principle and ensure personnel health and safety:*

- *Areas with potential radiological hazards SHALL be identified and designated with postings,*
- *Radioactive contamination SHALL be managed and controlled to minimize personnel exposure and limit inadvertent transfer beyond area boundaries,*
- *External and internal radiation doses to personnel SHALL be monitored and ensured not to exceed annual or lifetime limits,*
- *Instrumentation used to make radiation measurements SHALL be calibrated and maintained to ensure accurate results,*
- *Areas and activities requiring personal protective equipment SHALL be identified,*
- *Personnel SHALL be given training in radiation protection*
- *All NES S&M activities SHALL be planned to ensure radiation protection measures are incorporated as needed to provide for efficient and safe conduct of work.*

The NES Radiation Protection program SHALL minimize personnel exposure to radiation and reduce the likelihood that overexposure will occur.

Activities to Address SMP 5

Work at the MDA T NES will be conducted in accordance with LIR 402-700-01, *Occupational Radiation Protection Requirements*, the SSHASP, the RWP, and the IWD. An RCT will be present during all drilling activities. All field personnel will be current with Radiation Worker II training and will be enrolled in the Laboratory's personal dosimetry program. Based on historical data, internal monitoring is not required.

During sampling activities, the site will be posted and controlled as described in Section 5.6.1.4. Details on the radiation monitoring instruments, calibration, action levels, and controls, including PPE to ensure worker safety and the disposition of drill cuttings, are described in Section 5.6.1.5.

5.6.6 SMP 6: Quality Assurance Program

The TSR document states the following:

The NES Quality Assurance (QA) program SHALL support the LANL Institutional Quality Management Program (IQMP) to achieve and improve quality through the identification of problems and through recommendations and the initiation of improvements at the NES. This program SHALL ensure that the NES S&M activities maintain quality requirements that address the needs of sampling, surveying, mapping, drilling, personnel, and other activities associated with NES. Specific sampling objectives and criteria SHALL be identified in the NES S&M program on a site-specific basis.

The NES Quality Assurance program SHALL:

- *be implemented through written procedures and instructions;*
- *be applicable to all aspects of NES S&M activities, including construction, operation, maintenance, and design;*
- *require that records be maintained to preserve the technical basis line documentation; and*
- *support independent audit/verification requirements to determine compliance with the site QA Program.*

Activities to Address SMP 6

The ECR Quality Management Program (QMP) defines policies and requirements for performing characterization (environmental restoration) activities and ensures that responsibilities, authorities, and accountabilities are assigned to the proper personnel. The QMP complies with 10 CFR 830 Subpart A, DOE Order 414.1, and the Laboratory's Institutional Quality Management requirements, as outlined in LPR 308-00-00.3.

The QMP is implemented through written procedures such as ENV-ECR QPs. Data-gathering activities are performed in accordance with ENV-ECR SOPs. These procedures cover all aspects of NES activities, including record keeping and quality surveillance activities. The most current version of the procedures will be used. Project personnel will be trained to the most current revision, which may be obtained from the ENV-ECR website, located at http://erinternal.lanl.gov/procedures.shtml.

5.6.7 SMP 7: Abnormal Event Reporting Program

The TSR document states the following:

> *The NES Abnormal-Event Reporting program SHALL ensure that injuries or illnesses, environmental incidents, radiological incidents, property damage, and any other reportable occurrences are reported according to the required method set forth by LANL. The NES Abnormal-Event Reporting program SHALL ensure that abnormal events occurring during NES S&M activities are analyzed and documented to facilitate the identification of causes, the implementation of corrective actions, and the dissemination of lessons learned to minimize the potential for recurrence.*

Activities to Address SMP 7

Abnormal events are real-time events that adversely affect workers, the public, property, or the environment, such as vehicle accidents, injury at the workplace, fire, explosions, or radiological or hazardous spills. If an abnormal event occurs while S&M activities are being conducted at MDA T, the appropriate reporting process will be followed, as outlined in the SSHASP, in LIR 402-130-01, and in Notice No. 0139.

5.6.8 SMP 8: Qualification and Training Program

The TSR document states the following:

> *The NES Qualification and Training program SHALL ensure that LANL's institutional training requirements are met and SHALL identify NES-, job-, and task-specific training necessary for NES workers to complete their work safely and effectively in order to minimize the potential for accidents resulting in the release of radiological material. This program SHALL ensure that personnel responsible for NES S&M activities are trained and qualified, as applicable, to accomplish their safety-related responsibilities. Line management SHALL ensure that personnel are trained to perform NES S&M activities in accordance with Laboratory policies and the NES DSA.*

Activities to Address SMP 8

The project manager (PM), UTR, and ENV-ECR training specialist determine the appropriate task-specific training requirements for all personnel conducting activities at the MDA T NES, as discussed in Section 5.4. The training requirements are specific to the job duties and are commensurate with the responsibilities. The training will ensure that personnel working at the MDA T NES have the appropriate level of knowledge and experience. Personnel will be trained before performing work at the NES.

A training matrix maintained by the PL and controlled by the ECR training specialist has been developed for personnel conducting work at the MDA T NES. The matrix lists the procedures to which personnel will be trained and will follow while carrying out the NES S&M activities at MDA T. The training matrix is a job-focused document to meet the intent of DOE Order 5480.20A. Training requirements are tracked and managed following the current revisions of ECR QP-2.1, *Documenting Personnel Qualification and Selection Process;* ECR QP-2.2, *Personnel Training Management;* and ECR QP-2.3, *Personnel Entry and Exit Process.*

5.6.9 SMP 9: Record-Keeping Program

The TSR document states the following:

> *The NES Record-Keeping program SHALL support LANL's records management program by ensuring that records created in the normal course of business are maintained and protected from unauthorized destruction or removal. The NES records important to safety during S&M activities SHALL include personnel records that document radiation doses, documentation of identified hazards, and technical baseline documentation.*

Activities to Address SMP 9

The Laboratory's documentation and record-keeping requirements fulfill the NES record-keeping program. The program ensures that records created while conducting S&M activities are maintained and protected from unauthorized destruction or removal. The SSHASP provides applicable record keeping requirements as directed by HAZWOPER Standard OSHA 29 CFR 1910.120. Records are generated as a result of implementing the procedures applicable to the characterization activities and performing health, safety and radiological monitoring in accordance with the SSHASP and RWP. Field notebook documentation will be conducted following the current revision of ECR QP-5.7, *Notebook Documentation for Environmental Restoration Technical Activities.* Sampling paperwork, such as the sample collection logs and the chain-of-custody forms, will be completed and submitted to the SMO in accordance with ECR SOP-1.04, *Sample Control and Field Documentation.* The implementing procedures are listed in the job specific training matrices for the project.

Records generated during the field work at the MDA T NES will be submitted to the ENV-ECR Records Processing Facility (RPF) for permanent archival following the current revision of ECR QP-4.4, *Record Transmittal to the Records Processing Facility.*

5.6.10 SMP 10: Configuration Management

The TSR document states the following.

> *The NES Configuration Management program SHALL ensure that changes to the technical baseline are properly identified, developed, assessed (technically reviewed and validated), approved, scheduled, implemented, and documented through the use of a formal process.*

The NES Configuration Management program SHALL ensure the retention of the as-designed configuration of the physical barriers provided by the Inventory Isolation System. Additionally, this program SHALL ensure the use of a systematic, rigorous process to document, review, and approve changes to the barriers that are relied upon to protect the public, workers, and environment.

Activities to Address SMP 10

Configuration management ensures consistency with regards to technical design requirements, physical configurations, and facility documentation. The goal of configuration management is to ensure that the as-built designs of physical barriers and nuclear disposal units at NES are retained. One means of guaranteeing the retention of the Inventory Isolation System is proper management, including technical baseline project controls for scheduling and proper implementation and documentation of project scope and performance (in accordance with LIR 400-01-01). These management activities at the MDA T NES will comply with the ECR QMP, as discussed in Section 5.6.6.

The line-management organization for control of activities at the MDA T NES is discussed in Section 5.2. Nonintrusive surveys and sampling and drilling activities at the MDA T NES are S&M activities that will not change the physical barriers of the Inventory Isolation System. No capital improvements such as monitoring wells or other structures that will permanently change the configuration of the NES are anticipated.

The control of project records at the MDA T NES will comply with the record-keeping program as discussed in Section 5.6.9. Change control processes at the MDA T NES include the baseline schedule and cost control. Changes to the technical baseline will be assessed, approved, scheduled, implemented, and documented by the subject-matter expert and appropriate line management in accordance with LIR 240-01-01. The S&M activities at the MDA T NES will be conducted to satisfy the requirement stipulated in Section IV.C.2.e of the Consent Order, and the UTR will submit any significant changes to the technical approach to NMED for approval. The IWM process dictates that the IWD will be modified, and approval obtained, if any changes affect the hazards associated with S&M activity. Changes to the technical baseline will be evaluated under the USQ program, as specified in Section 5.6.3.

Borehole drilling will not require the construction of any access roads and cannot cause a reconfiguration of the inventory isolation system. No specific activities are planned for configuration management. The post field work inspections discussed in Section 5.6.1.8 will ensure that the site is returned to original state.

5.6.11 SMP 11: Vehicle and Equipment Maintenance

The TSR document states the following:

The NES Maintenance program SHALL ensure the identification and maintenance of equipment that has the potential to adversely affect public safety, worker safety, environmental protection, and the programmatic mission at LANL.

The NES Maintenance program SHALL ensure the proper implementation of maintenance and work control requirements and SHALL primarily encompass the maintenance of vehicles and equipment that may be in use near or on the NES.

Activities to Address SMP 11

Equipment used during field activities will be inspected and maintained as detailed in the SSHASP. The equipment includes the drill rig, pick-up trucks, health and safety monitoring equipment, and any heavy equipment used on site such as a skid-steer loader or forklift. In accordance with 29 CFR 1926.20(b)(2), the drill rig will be inspected daily by the driller operating the rig. In addition, as specified in the SSHASP, the qualified operator will inspect support equipment before each use. The SSO will inspect emergency response equipment, such as fire extinguishers, eyewash, and first aid kits, at the start of the activities and weekly thereafter. Inspections will be documented in the field logbook (or other appropriate means of documentation such as inspection forms or inspection tags affixed to the equipment). The drill rig inspections and maintenance records for all support equipment (e.g., forklift, dust suppression, generator) will be documented and retained as a permanent record, as specified in Section 5.6.9.

5.6.12 SMP 12: Emergency Preparedness

The TSR document states the following:

> *The NES Emergency Management program SHALL ensure that NES personnel and emergency management organizations are ready to respond rapidly and correctly to accident situations so that the effects of the accident can be minimized. The program SHALL include emergency procedures, activation of emergency organizations, assessment and protective actions, worker training to minimize exposure to radiological and hazardous materials, and recovery actions to minimize releases in the unlikely event that the Inventory Isolation System is breached.*

Activities to Address SMP 12

The emergency response plan for the MDA T NES S&M activities is contained in the SSHASP. Cellular phones and/or radios will be available on-site at all times. The Emergency Management and Response (EM&R) group will be notified as part of the readiness review process before field work begins. In the event of an emergency, the SSO or PIC will function as the site emergency coordinator and will immediately call 911. On-site personnel will take control of the site until emergency services and/or EM&R personnel arrive and assume control. The EM&R will be notified in all cases, even if 911 is not contacted. If a spill occurs on the site, it will be reported to first-responders and the facility manager so appropriate actions can be taken to ensure personnel safety and environmental controls. A map showing the route to Los Alamos Medical Center, the incident reporting flowchart, and incident/emergency contacts and telephone numbers are presented in the SSHASP and will be kept on-site. Emergency evacuation routes and muster areas will be discussed with the workers during the prejob health and safety briefing to be conducted before field activities begin and during the daily tailgate safety meeting.

5.6.13 SMP 13: Fire Protection

The TSR document states the following:

> *The NES Fire Protection program SHALL serve as the overarching program for ensuring fire safety during NES S&M activities. The program SHALL have provisions for ensuring the implementation of NES-related fire-protection activities, such as worker fire-prevention and safety training, combustible controls, fire watch, and fire extinguisher inspection, testing, and maintenance.*

Activities to Address SMP 13

The Laboratory maintains a fire protection program in compliance with the requirements of the DOE contract with UC, as detailed in LIR 402-910-01. The fire danger rating is posted on the Laboratory's home page (http://int.lanl.gov/). This rating will be checked daily before field activities begin at the MDA T NES and whenever weather conditions (such as lightening or high winds) change significantly. The Laboratory also publishes a fire matrix (http://int.lanl.gov/fire_matrix.html) that provides requirements for conducting various types of work under different fire dangers.

An inspected fire extinguisher, appropriate for the anticipated class or classes of fire, will be maintained on-site in an area adjacent to the drill rig. At least one field team member with fire extinguisher training will be on-site at all times during sampling activities.

Field activities at the MDA T NES are expected to commence during the spring months. As part of the readiness process, the Los Alamos County Fire Marshal, EM&R, and the Laboratory's fire protection group will be consulted to determine if specific measures need to be taken at any time during field activities.

On February 16, 2006, the Laboratory's Fire Marshall Office was briefed on the planned S&M drilling and sampling activities at the MDA T site (including the NES). Drilling activities will not be spark producing and no welding or grinding will be performed during Red Flag conditions. The Laboratory's fire marshall recommended that during "red flag" conditions the team will request permission to work on a day-by-day basis. Depending on the work activities, authorization may be given to work with certain controls. Depending on the current conditions, the Fire Marshall Office may require controls such as installing spark arresters on the exhaust pipes, deploying an extra fire extinguisher, or conducting a daily walk through before workers leave the site to ensure no possibility for fire exists.

5.6.14 SMP 14: Calibration Program

The TSR document states the following:

> *The NES Calibration program SHALL ensure the proper control, use, and calibration of tools and equipment necessary for NES S&M activities. To minimize personnel exposure and limit inadvertent transfer beyond area boundaries, and establish a preventative barrier, the NES Calibration program SHALL ensure the safety of workers and the public through the proper calibration of measuring and test equipment used to manage and control radiation doses.*

Activities to Address SMP 14

Monitoring equipment used during sampling activities at the MDA T NES will be calibrated according to current HSR-1 instrument-specific procedures and the manufacturer's specifications. The HSR-1 instruments are typically calibrated by HSR-12, and response checks are performed by HSR-1. Section 5.6.1.5 discusses monitoring and measurement, including instrument calibration. Instrument calibration results will be documented according to the record-keeping program as discussed in Section 5.6.9. Industrial hygiene monitoring equipment required by the SSHASP will be rented units that have been serviced before it is delivered to the site. Instruments will be function-checked and/or calibrated daily before use or in accordance with the manufacturer's operations manual by the SSO. Records of the initial factory and field calibrations or checks will be maintained by the SSO in accordance with the record-keeping program as discussed in Section 5.6.9. The calibration gas for daily calibration in the field will be traceable to National Institute of Standards and Testing standards. Documentation of this calibration will be maintained on-site.

5.6.15 SMP 15: Hazardous Materials Protection Program

The TSR document states the following:

> *This program SHALL ensure that chemical and hazardous material exposures to the workers and the public are minimized during NES S&M activities. Additionally, this program SHALL ensure that the effects of atmospheric releases of these substances are monitored and minimized. Worker health and safety at the Laboratory SHALL be assured for hazardous-materials handling by addressing the generic health and safety considerations for handling hazardous materials in laboratories, facilities operations, and construction activities. The program addresses corrosives, carcinogens, combustibles, flammables, oxidizers, heavy metals, reactive and explosive chemicals, pesticide and herbicide application and use, toxins/proteins/enzymes, toxic substances, chemical exposures, controlled substances, chemical inventory, chemical storage, asbestos (worker and environmental protection), lead exposure, ventilation, and appropriate personal protective equipment.*
>
> *The NES Hazardous-Materials Protection program SHALL ensure that workers are educated about the hazardous materials they work with and are properly trained to ensure their safety during NES S&M activities involving hazardous materials. The NES Hazardous-Materials Protection program SHALL also adhere to OSHA requirements.*

Activities to Address SMP 15

Hazardous materials protection requirements for field activities conducted at the MDA T NES are detailed in the SSHASP and IWD. Monitoring and measurement requirements are discussed in Section 5.6.1.5. All field personnel will have current OSHA HAZWOPER training, including hazard communication, and will adhere to all OSHA requirements, as discussed in the SSHASP.

5.6.16 SMP 16: Radioactive and Hazardous Waste Management Program

The TSR document states the following:

> *The NES Radioactive and Hazardous Waste Management program SHALL ensure the implementation of LANL waste management requirements for NES S&M activities. By implementing the waste management requirements, the program SHALL ensure the health and safety of workers and the public, as well as minimize impact to the environment, by reducing the potential for a release of radioactive or hazardous material as the result of improper handling, storage, or disposal of radioactive or hazardous waste.*

Activities to Address SMP 16

All waste generated during sampling activities at the MDA T NES will be managed in accordance with the waste characterization strategy form (WCSF). Three waste streams are anticipated from the proposed S&M activities at MDA T: (1) borehole cuttings; (2) "contact" wastes, including PPE, plastic, disposable sampling equipment, and decontamination wipes; and (3) decontamination solutions. The disposal path for these waste streams is discussed in the WCSF. Management of investigation-derived wastes will follow the *Management Plan for Investigation-Derived Waste*, in Appendix C of the NMED-approved MDA T investigation work plan (LANL 2004, 85641) in accordance with Section IX.B.5 of the Consent Order. Waste management will also be in accordance with the current revision of ECR SOP-01.06,

Management of Environmental Restoration Project Waste, and applicable federal, state, and Laboratory requirements, as determined by the waste manager.

Drill cuttings will be collected and stored outside the NES boundary in roll-off bins. The core material associated with the cuttings will be field screened and sampled for off-site analysis for radioactive and hazardous constituents. The results from the analyses will be used to determine the proper disposal of waste.

6.0 DESIGN FEATURES

This section describes the design features of the Inventory Isolation System at MDA T and presents the controls on characterization activities, in the form of performance criteria, to ensure that the performance of the design features is not significantly impaired. The Inventory Isolation System is the primary passive barrier to the release of nuclear or hazardous materials and to the interaction of the disposal sites with external forces or other potential release mechanisms.

6.1 Inventory Isolation System

The primary method for reducing the risk to the public, the workers, and the environment from the release of nuclear or hazardous materials is to maintain the integrity of the physical barrier provided by the Inventory Isolation System (LANL 2004, 88713). The Inventory Isolation System at MDA T is a composite system that uses burial in vertical shafts and absorption beds, inventory distribution, and 5 to 6 ft of cover to protect waste against the effects from external forces, including drilling.

The primary elements of the Inventory Isolation System at MDA T are described in Sections 6.1.1 through 6.1.5. The boundary of the NES is based on the location of the disposal units which were located based on engineering drawings ENG-C 2217 and ENG-R 4475 (LANL 2005, 89565). The locations of the absorption beds and the RWSA were confirmed from historic drilling and sampling performed in 1996/1997 RFI, as discussed in Section 4.1.

6.1.1 Primary Containment Vessels

A small portion of the waste at MDA T is protected by primary containment vessels in addition to being buried in the disposal shafts. The disposal shafts numbered 3, 17, 18, 19, and 26 contain 3-ft-diameter bathyspheres that were placed three to a layer and at various depths (Salazar 2003, 76090). Disposal shaft 17 contains six drums of cyanide salts fixed in asphalt. Shafts 52 and/or 58 contain four drums of uranium-233 waste.

6.1.2 Configuration of Burial

The shafts at MDA T reduce the surface area exposed to vertical intrusion, thus decreasing the chance that an intrusion would strike waste and minimizing the amount of waste that might be impacted. The four absorption beds were excavated 4 ft into the tuff. The surrounding tuff inhibits intrusion into the waste and provides shielding from radiation exposure to receptors at the surface.

6.1.3 Burial Depth

The four absorption beds were excavated 4 ft into the tuff, and the shafts were excavated as deep as 65 ft into the tuff. The surrounding tuff inhibits intrusion into the waste from the side and provides shielding from radiation exposure to receptors at the surface

6.1.4 Inventory Distribution

The inventory within the absorption beds was deposited as the result of infiltration of wastewater from the TA-21 process facilities. Concentrations of radionuclides in wastewater discharged to the MDA T absorption beds were historically low, and absorption tended to further distribute the radionuclide inventory throughout a relatively large volume of earthen materials in the beds themselves, as well as in the surrounding soil and bedrock. These two factors reduce the likelihood a release of concentrated hazardous materials because it is unlikely that any single event or action could affect more than a tiny fraction of the total inventory.

The amount of untreated wastewater sent to the absorption beds during 1945 to 1952 was on the order of 14 million gal. (Rogers 1977, 05707, p. T-4). The concentration of plutonium in effluent during this time has been estimated at 60 counts per minute per milliliter (cpm/mL) (120 dpm/mL). In addition, 10,450 gal. of treated wastewater with an average plutonium concentration of approximately 7000 cpm/mL [14,000 disintegrations per minute/per milliliter (dpm/mL)] was released into the beds from June 1951 to July 1952.

Radionuclides present at MDA T in nonretrievable waste disposal shafts are plutonium-238, plutonium-239, plutonium-240, americium-241, uranium-233, and uranium-235. The shafts contain transuranic (TRU) and fissile waste (Walker 1981, 06277) with a total waste volume of approximately 3800 m^3. Each shaft varies in composition and volume of waste. It is unclear which shafts received radioactive materials (LASL 1979, 00976, pp. 1–2).

Uncharacterized low-activity waste streams disposed in the shafts include solids from wash-down. Activity levels and volumes for these low-activity waste streams should be extremely small (LASL 1979, 00976). The waste was apparently generated as a result of processing a number of different feed materials, so considerable variability in the composition within a shaft as well as between shafts may exist.

Cement-treated waste has highly variable activities of plutonium-239 and americium-241. More americium-241 than plutonium-239 is present in the waste. A total of 713 g of uranium-233 was disposed of in shafts 52 and/or 58 in four 55-gal. drums (LASL 1979, 00976). More detailed records of the shafts receiving uranium or the amount placed in each shaft are unavailable. However, 384 g of most likely uranium-235 is inferred to have been spread among shafts 6, 8, 54, 87, 90, 91, 92, and 94 (Complex A) and shafts 52 and 58 (Complex B), based on the dates that shafts were being filled (Haaker 2003, 76097). Other contributions to inventory include the plutonium-239/240 contained in the bathyspheres. Estimated present-day inventory totals by shaft for plutonium-239, plutonium-238, plutonium-240, and americium-241, as well as uranium-233 and uranium-235 for shaft Complexes A and B, are provided in Haaker (2003, 76097).

6.1.5 Thickness and Characteristics of Cover Material and Caps

Cover materials provide a buffer that helps protect the inventory from actions or events at the surface. Cover materials also inhibit uncontrolled release of the waste from erosion. Finally, cover materials provide shielding from radiation exposure at the surface. Cover materials also support vegetation, which helps to stabilize the cover.

The information on the cover thickness over the absorption beds was determined from historical borings and is more reliable than the information for the cover over the shafts; however, based on the locations of shafts in relation to the absorption beds, the cover thickness should be similar. Specifically, the thickness of the cover over the absorption beds ranges from 5 to 6 ft, based on 1996/1997 RFI boreholes 21-05051, 21-05053, 21-05054, 21-05055, and 21-05056 (LANL 2001, 70348). The borehole logs generally describe

the cover material as a mixture of sandy/silty clay and crushed tuff. The upper 2 ft of each disposal shaft currently contains clean concrete (Salazar 2003, 76090).

6.2 Performance Criteria

The Inventory Isolation System isolates the buried wastes from wind, rain, and direct contact with humans and animals, including direct contact that could occur as a result of characterization activities at the MDA T NES. The performance criteria for the inventory isolation system are listed in the DBM (LANL 2005, 89565) and will be followed during characterization activities at MDA T NES.

7.0 CONDUCT OF OPERATIONS

The DOE has established guidelines (DOE Order 5480.19, *Conduct of Operations Requirements for DOE Facilities*) for professionals who conduct operations for DOE and NNSA to improve the quality and uniformity of operations and to ensure that operations are carried out in a safe manner. The Laboratory has also developed requirements (the *ENV-ECR* Group *conduct of operations policy manual*) in conformance with the DOE order to ensure that operations and programmatic activities within the Laboratory are performed in a safe and secure manner and are in accordance with applicable codes, standards, DOE directives, and sound business practices. The conduct of operations manual is in accordance with other Laboratory procedures such as LIR 310-00-00.1, *ENV-ECR Conduct of Operations* and Operation Support Tool (OST) 310-00-00, *Conduct of Operations Implementation Manual.* Personnel conducting activities for the MDA T NES will train to, and will work in accordance with, the ENV-ECR Group conduct of operations manual.

8.0 OTHER REQUIREMENTS

The purpose of this section is to identify other requirements not specifically addressed previously in this document or other implementing documents such as the IWD that will ensure that characterization activities will be conducted in accordance with the TSRs.

8.1 Miscellaneous Nuclear Environmental Site Surveillance and Maintenance Requirements

Additional requirements of the NES S&M program, their applicability, and how they will be addressed are listed in Table 8.1-1.

8.2 Suspend or Stop Work Conditions

Suspend or stop-work conditions are summarized in Table 8.2-1. Each of the conditions listed in the table will require that the PIC and the UTR are contacted immediately. Some conditions in Table 8.2-1 will require that the DOE is contacted immediately, following the contact process illustrated in Figure 5.2-1.

9.0 REFERENCES

DOE (Department of Energy), January 2005. "Safety Evaluation Report for the Los Alamos National Laboratory Nuclear Environmental Sites DSA/TSR," Department of Energy report, Los Alamos, New Mexico. (DOE 2005, 88752)

Haaker, R., June 5, 2003 "MDA T Shafts Inventory Assessment--DRAFT," Los Alamos National Laboratory memorandum to M. Thacker from R. Haaker, Los Alamos, New Mexico. (LANL 2003, 76097)

LANL (Los Alamos National Laboratory), April 26, 2001. "RFI report for Potential Release Sites 21-016(a-c), 21-011(c), 21-028(a), C-21-009, C-21-012, Material Disposal Area T, Field Unit 1," Los Alamos National Laboratory document LA-UR-96-4508, Los Alamos, New Mexico. (LANL 2001, 70348)

LANL (Los Alamos National Laboratory), February 2004. "Investigation Work Plan for Material Disposal Area T at Technical Area 21, Solid Waste Management Unit 21-016(a)-99," Los Alamos National Laboratory document LA-UR-04-0559, Los Alamos, New Mexico. (LANL 2004, 85641)

LANL (Los Alamos National Laboratory), November 2004. "Documented Safety Analysis for Surveillance and Maintenance of Nuclear Environmental Sites at Los Alamos National Laboratory," Los Alamos National Laboratory document LA-UR-04-7505, Los Alamos, New Mexico. (LANL 2004, 88713.2)

LANL (Los Alamos National Laboratory), January 2005. "Technical Safety Requirements for Surveillance and Maintenance of Nuclear Environmental Sites at Los Alamos National Laboratory," Los Alamos National Laboratory document LA-UR-04-7504, Los Alamos, New Mexico. (LANL 2005, 88713.64)

LANL (Los Alamos National Laboratory), August 1, 2005. "Site Evaluation Report TA-21 MDA T NES (Nuclear Environmental Site)," Los Alamos National Laboratory document LA-UR-05-6242, Los Alamos, New Mexico. (LANL 2005, 89518)

LANL (Los Alamos National Laboratory), October 2005 "Material Disposal Area T, Solid Waste Management Unit 21-016(a)-99 Characterization, Design Basis Memorandum, Revision 0," Los Alamos National Laboratory report LA-UR-05-5942, Los Alamos, New Mexico. (LANL 2004, 89565)

Los Alamos Scientific Laboratory, February 27, 1979. "Radionuclide Content of Area T Shafts," memorandum H-7B-79-9 to M.A Rogers (H-12) from J.L. Warren (H-7), Los Alamos Scientific Laboratory, Los Alamos, New Mexico. (LASL 1979, 00976)

Monahan, S., May 2, 2006. MDA T NES Criticality Assessment. E-mail message to J. Crocker (TerranearPMC) from S. Mohahan (HSR-6), April 24, 2006, Los Alamos, New Mexico. (Monahan 2006, 92186)

Nyhan, J.W. et al., July 01, 1984. "Distribution of Radionuclides and Water in Bandelier Tuff beneath a Former Los Alamos Liquid Waste Disposal Site after 33 Years," Los Alamos National Laboratory report LA-10159-LLWM, Los Alamos, New Mexico. (Nyhan et al. 1984, 06529)

Rogers, M.A. June 1977. "History and Environmental Setting of LASL Near Surface Land Disposal Facilities for Radioactive Wastes (Areas A, B, C, D, E, F, G, and T)", Los Alamos Scientific Laboratory, Report LA-6848-MS, Volume I and II, Los Alamos, New Mexico. (Rogers 1977, 05707)

Salazar, K., August 19, 2003. Personal communication between K. Sagez (WGII) and D. Salazar (FWO-WFM), Los Alamos, New Mexico. (Salazar 2003, 76090)

Walker, L.J., September 01, 1981. "Alternative Transuranic Waste Management Strategies at Los Alamos National Laboratory", Los Alamos National Laboratory report, LA-8982-MS, Los Alamos, New Mexico. (Walker 1981, 06277)

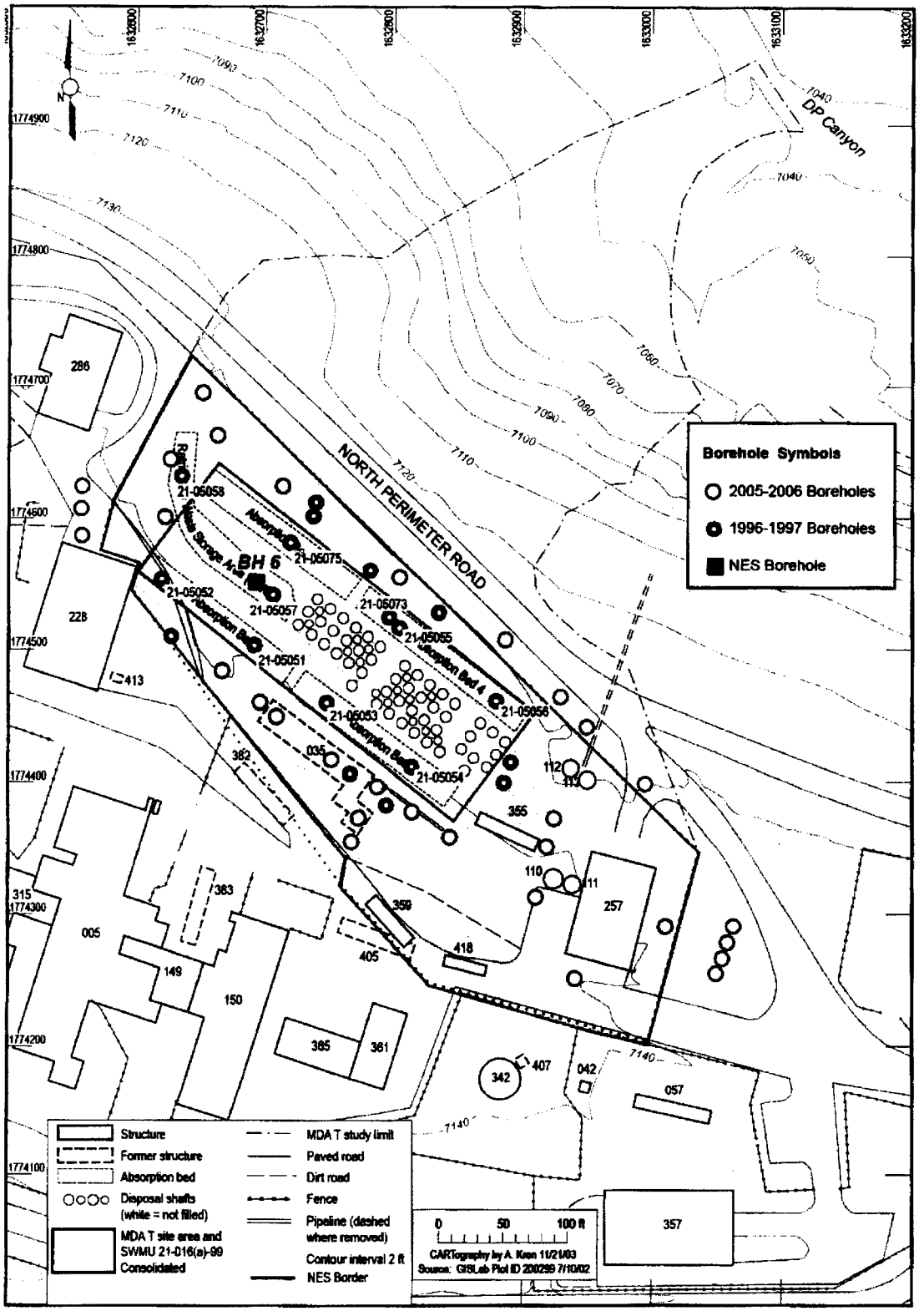

Figure 3.0-1. Location of the NES and boreholes within MDA T

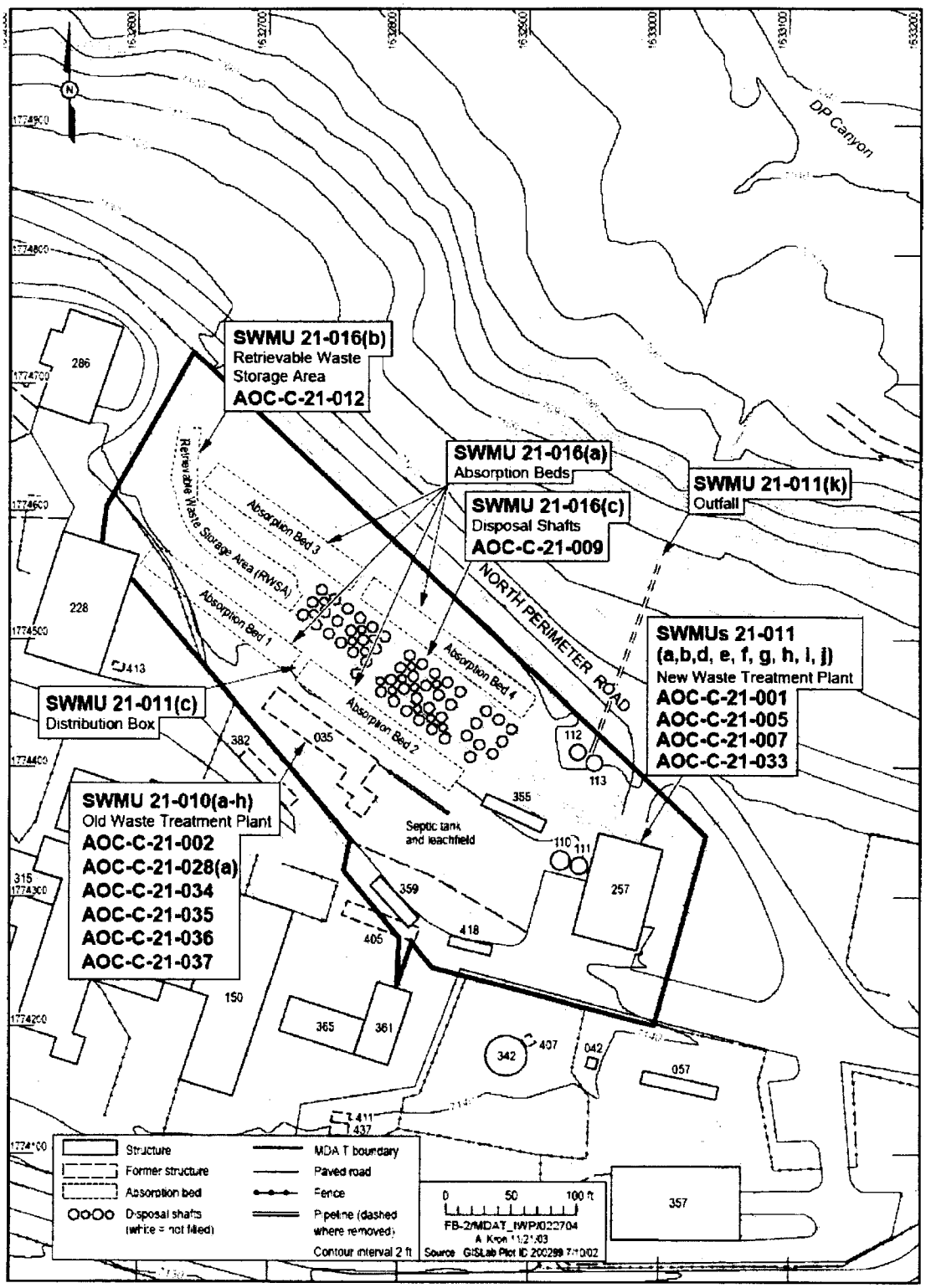

Figure 3.0-2. Main disposal features and SWMUs at MDA T

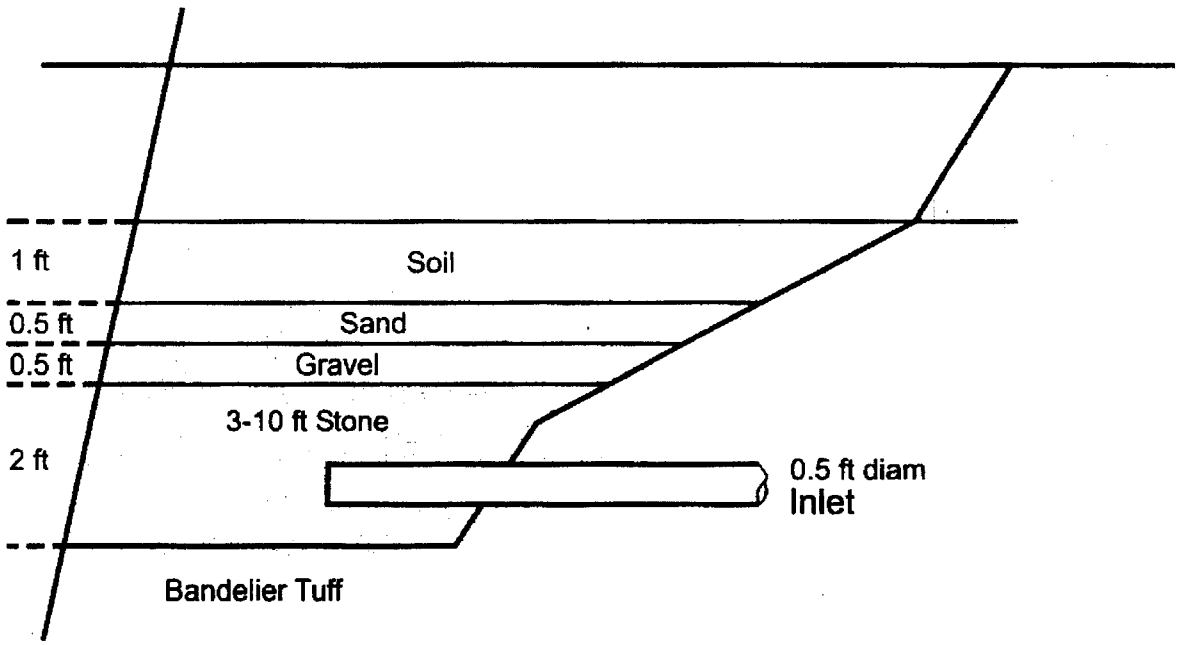

Source: Nyhan et al., 1984; 05529.1, p. 5

Figure 3.0-3. Cross-section of an absorption bed at MDA T

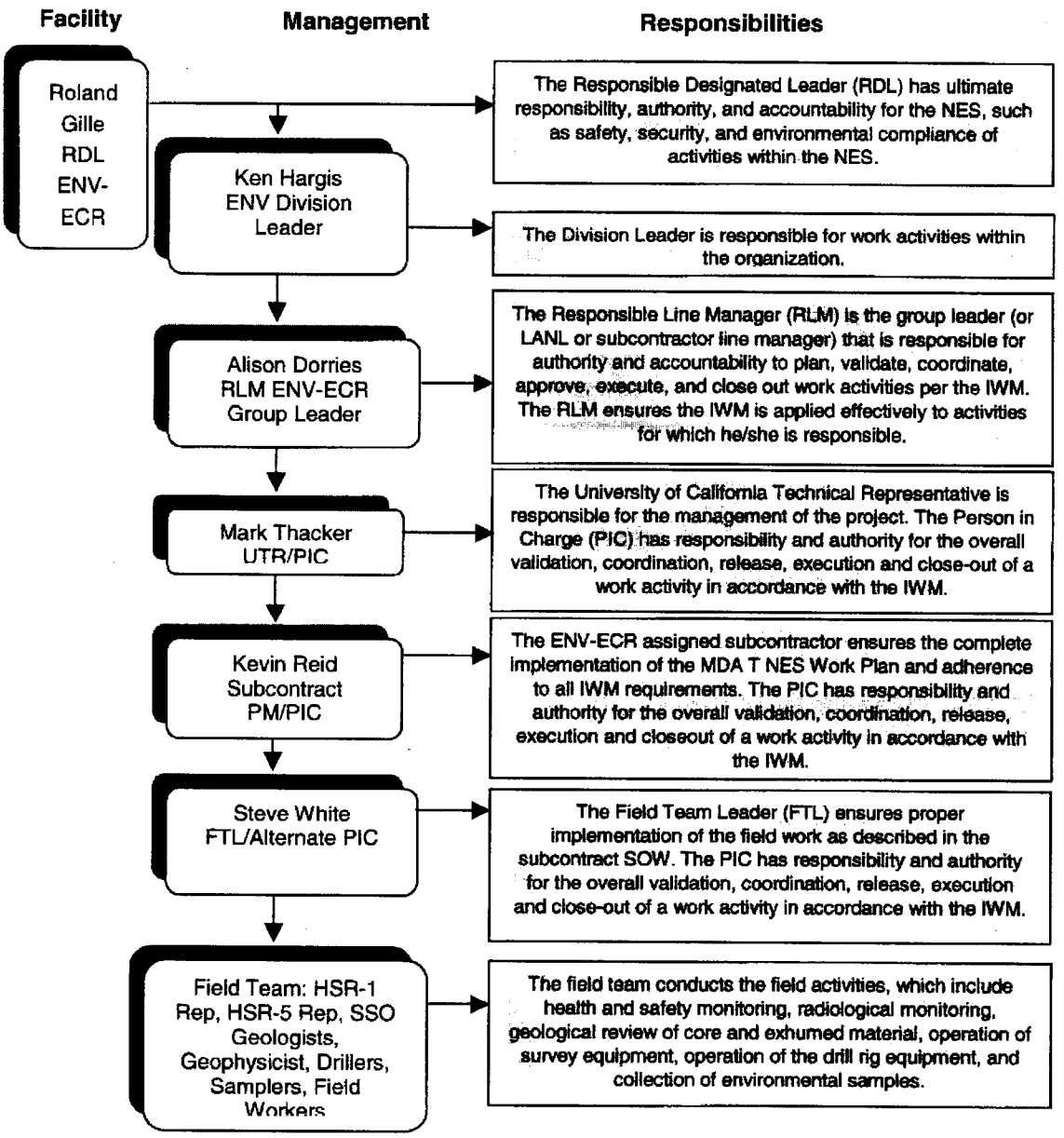

Figure 5.2-1. Organization and management responsibility flowchart for S&M activities conducted at the MDA T NES

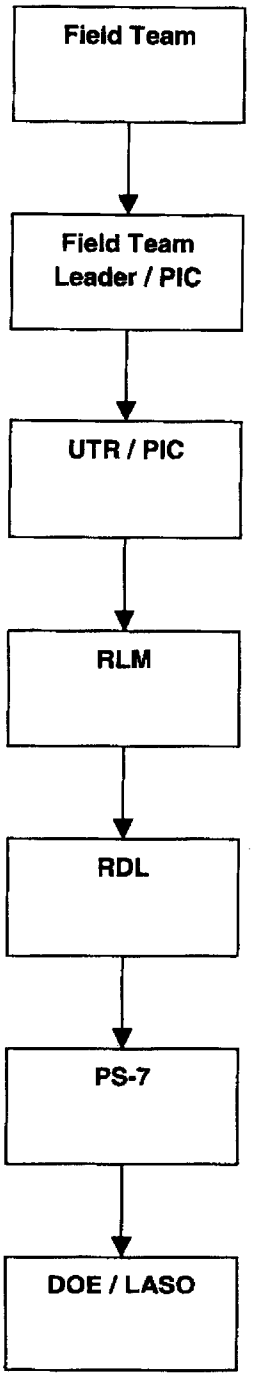

Figure 5.3-1. TSR violation notification process

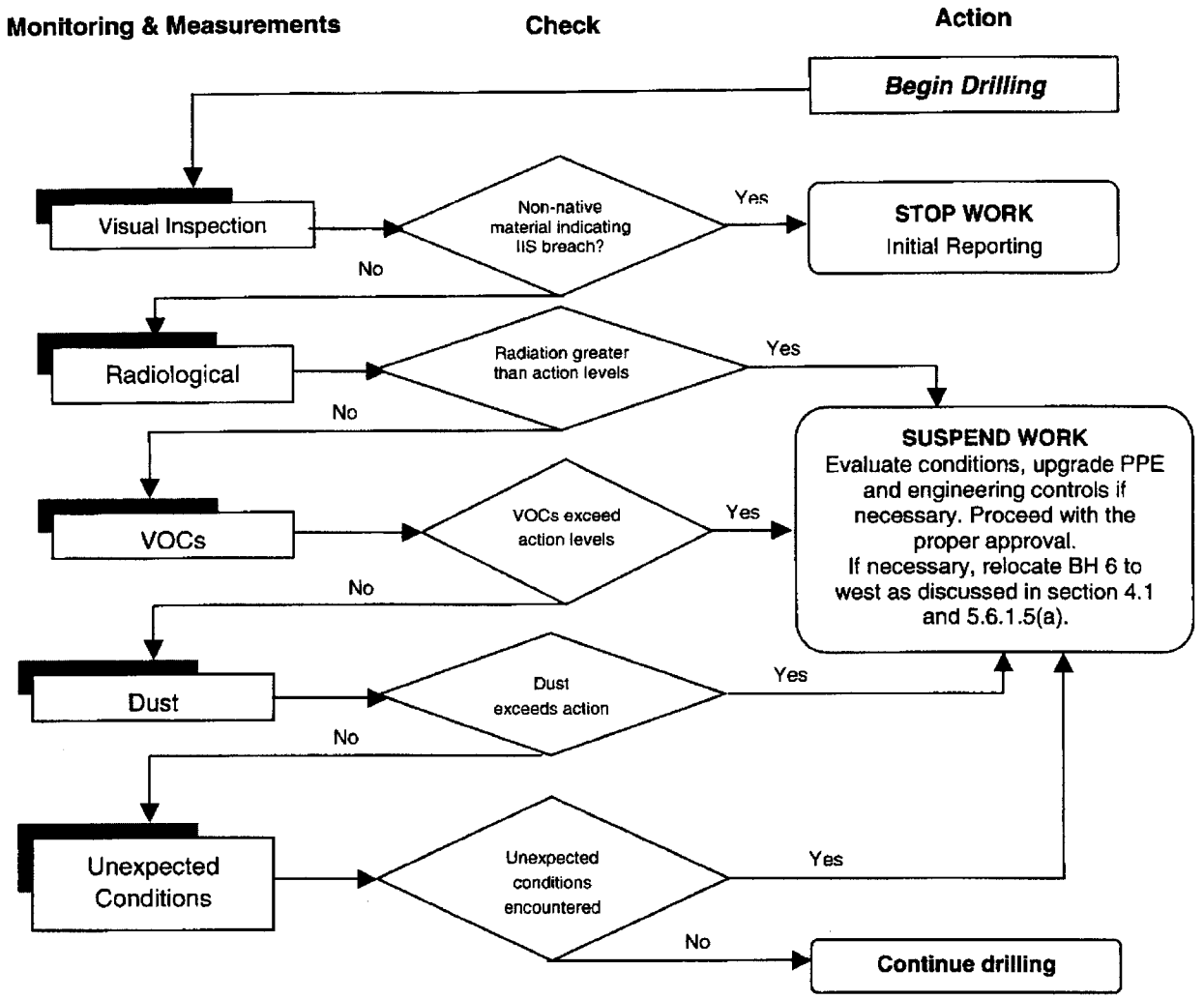

Figure 5.6-1. Evaluation and screening flowchart of exhumed materials

Table 4.2-1
Summary of Proposed Borehole Drilling and Sampling at MDA T

Adjacent Disposal Units/ Data Need Addressed	Borehole or Location ID	Location	Borehole Depth (ft)	Geologic Units encountered	VOCs[a]	SVOCs	Dioxins/Furans[b]	pH	Total Uranium	Radionuclides	TAL Metals	Nitrates	Perchlorate	Gamma Spectroscopy	Americium-241	Isotopic Plutonium	Isotopic Uranium	Strontium-90	Tritium
Borehole Drilling																			
RWSA, beds and shafts/nature and extent and paleochannel characterization	BH 6	RWSA	280	Qbt 3, Qbt 2	X	X	X	X	X	X	X	X	X	X	X	X	X	X	X

Notes:

1. BH 6 will be continuously cored to a depth of 40 ft and at a minimum of every 10 ft thereafter.
2. A minimum of four samples will be collected for fixed lab analysis including
   a. shallowest field screening detection,
   b. deepest field screening detection,
   c. highest field screening result, and
   d. total depth (TD) of borehole.
3. A minimum of four additional samples from preferential flow pathways will be collected for lab analysis.
4. BH 6 location will also be sampled at the existing surface, if warranted by the results from walkover radiological surveys.
5. Shallow soil sampling will continue to depths greater than 2 ft if appropriate as indicated by field screening or previous sampling.

[a] VOCs for pore gas by Environmental Protection Agency Method TO-14.

[b] Dioxin and furan sampling from the buried operational surface only (where identified in recovered cores).

Table 5.6-1
Monitoring and Measurement Control Criteria

Hazardous Condition/ Substance	Instrument	Procedure	Location and Frequency of Monitoring	Action Level(s)/Rationale	Response Action(s)
Noise	Quest Technologies Model M-27 Noise Logging Dosimeter or equivalent	Manufacturer manuals and calibration procedures (will be kept on site)	Perform noise survey to characterize operations, delineate areas where postings and hearing protection are required, and confirm adequacy of hearing protection. Conduct noise dosimetry when the 8-hour TWA is suspected of being greater than 82 dBA.	>85 dB(A) 8 hr time-weighted average (TWA)	Hearing Conservation Program enrollment
				>85 dBA 8 hr TWA	Hearing protection required
				Rationale: LIR 402-820-01.X TPMC's ES&H Hearing Conservation Program	Not applicable
Nuisance Dust	MIE Model pDR-1000, Personal Data-Logging Real Time Aerosol Monitor or equivalent	Manufacturer manuals and calibration procedures (will be kept on site)	Monitor in workers BZ to characterize exposure as necessary.	8-Hour TWA 3.0 mg/m3 **Rationale:** ACGIH TLV for respirable particulates not otherwise classified.	Reduce dust levels by wetting soils until level is below action level. Have personnel move upwind of dust generating operations. If unable to maintain dust levels below 3.0mg/m3, stop work and reevaluate operations.
Radioactive Isotopes	Per RWP	RWP	On site RCT shall monitor individuals at the work site as per the RWP.	Per RWP: At radiation levels 5x background and < 10x the action levels in Table 14-1 of LIR 402-700-1	RCT shall evaluate conditions and upgrade PPE as appropriate.
				At radiation levels greater than 10x Table 14-1 of LIR 402-700-1	RCT shall consult with the ENV-ECR Team Leader for RCTs who will approve PPE and engineering control upgrades and authorizes continued drilling. If necessary, BH 6 will be relocated to the west as discussed in Sections 4.1 and 5.6.1.5(a).
VOCs	Photo Ionization Detector equipped with 11-eV bulb	Follow manufacturer specifications	Monitor core and the breathing zone	Sustained (30 seconds or more) reading at twice the established background on the core or in the breathing zone.	First, temporarily suspend work, then, evaluate site conditions. If the site conditions warrant, collect VOC sample. Secure site, and conduct new hazard assessment with the new data. Re-evaluate PPE requirements and monitoring requirements.

Table 8.1-1
Additional Requirements

Requirement	Applicability to MDA T NES	Actions to Address
Protect boreholes when not in use.	38 boreholes are planned outside and a single borehole planned (BH 6) within the MDA T NES.	Wells will be capped; boreholes left open prior to well installation or abandonment will be covered and barricaded.
Abandon boreholes no longer needed.	Boreholes that will not be converted to monitoring wells will be abandoned.	Borehole abandonment will use a tremie pipe to pump bentonite grout into the open borehole from the bottom of the borehole at the time of abandonment to the ground surface.
Maintain the integrity of monitoring wellheads.	Monitoring wells may be installed, depending on field conditions.	The surface casing will be visually inspected for structural integrity and repaired as necessary.
Maintain the integrity of existing fences.	There are existing fences, and new fences may be installed.	Fences will be visually inspected daily for structural integrity and repaired as necessary.
Maintain good housekeeping.	Characterization activities will have equipment and temporary field facilities.	Equipment and facilities will be neat and orderly, sanitation facilities will be inspected and maintained, and the site will be kept clean.
Clear snow.	Field operations are expected to occur in early spring.	Snow will be plowed without disturbing the ground.

Table 8.2-1
Suspend or Stop Work Conditions

Description	Identification	Action Required	Contact
Dust action levels are exceeded.	RCT, SSO	Suspend work until conditions improve.	PIC, UTR
Radiation is detected at ten times established acceptable level.	RCT	Stop work and area shall be decontaminated to below the acceptable level.	PIC, UTR, ENV-ECR RCT Team Leader
Anthropogenic material is encountered below depth of surface cover fill/Qbt3 contact.	Driller, PIC, Geologist	Stop work and **initiate reporting process**.	PIC, UTR, DOE
Unexplained observations or monitoring measurements suggest that a disposal unit penetration is imminent.	Driller, PIC, geologist, RCT	Suspend work and evaluate borehole location.	PIC, UTR
A disposal unit is breached.	Driller, PIC, geologist, RCT	Stop work and **initiate reporting process.**	PIC, UTR, DOE

Appendix A

Criticality Assessment for Characterization Activities at Material Disposal Area T (MDA T), Technical Area 21

A-1.0 PURPOSE

This report assesses the potential for a criticality accident during or as the result of the drilling of an environmental monitoring borehole (BH).

A-2.0 BACKGROUND ON RADIOACTIVE WASTES LOCATED AT MATERIAL DISPOSAL AREA T

The waste disposal shafts at Material Disposal Area (MDA) T are nominally 4 ft, 6 ft, and 8 ft in diameter and vary in depth to 24 m, based on a 2003 study of historic documents (Haaker 2003, 76097). The shafts and absorption beds were covered with 5 to 6 ft of fill soil, giving a total depth below existing ground surface of 71 ft. Using the depth of 24 m (78.8 ft) from a 2003 study (Haaker 2003, 76097) is conservative, and this depth will be used for this criticality assessment.

The shafts contain transuranic (TRU) and fissile waste (Walker 1981, 06277) with a total waste volume of approximately 3800 m^3. In 2000, the Department of Energy (DOE) reported this waste volume estimate as 3610 $m^3$of TRU and fissile material and 190 m^3 of low-level waste (LLW) located at MDA T.

Figure A-1 provides the location of absorption beds and waste storage shafts at MDA T. Of particular interest for this safety assessment is the shaded area, which is the nuclear environmental site (NES) at MDA T, a HAZCAT 2 nuclear facility.

Several vertical boreholes will be drilled outside the NES boundary, and one vertical borehole (BH) 6 will be drilled within the NES between absorption beds 1 and 3 and near Shafts 58, 59, and 60. The drilling operation associated with BH 6 poses a *potential* criticality safety concern simply because of its location as compared to TRU waste shafts 58, 59, and 60.

The tuff- and fill-covered inventory of the absorption beds is approximately 9.8 curies (Ci). Results of historical sampling of the beds indicates that the majority of the radioactive inventory is under nearly 10 ft of cobbles, gravel and crushed tuff at the interface between the absorption layer and the bed bottoms (LANL 2004, 88713). This inventory is dispersed in fill material and native tuff. While BH 6 is located between Absorption Beds 1 and 3, the amount of fissile material in the beds is insufficient the pose even a potential criticality safety concern. In addition the depth of these beds is insufficient (approximately 12 ft) for possible intersection by a vertical borehole located at least 10 ft away during borehole drilling operations. There will be no further consideration of the role of the absorption beds in this criticality assessment.

The boreholes drilled outside the NES pose no nuclear criticality safety issues because the likelihood of these boreholes intersecting a waste shaft is itself judged to be incredible, i.e., the boreholes are sufficiently separated from disposed fissile material to preclude intersection.

A-3.0 CRITICALITY ASSESSMENT

The drilling operation associated with BH 6 poses a *potential* criticality safety concern simply because of its location as compared to TRU waste shafts 58, 59, and 60. Two conditions, (1) intersecting a shaft with BH 6 and (2) extracting sufficient quantity and composition, must be met, at a minimum, for a criticality accident to even be theoretically possible based on mass alone. These two conditions are addressed separately in the following assessment.

A-3.1 Potential Intersection of BH 6 and Adjacent Shafts 58, 59, or 60

Exploratory BH 6 is proposed to be located a minimum of 20 ft northwest of shafts 58, 59, and 60 and centered approximately between absorption beds 1 and 3. While the final location is yet to be established, BH 6 will be located no closer than 10 ft from the inner boundary of absorption beds 1 and 3 and no closer to the edge of shafts 58, 59, and 60 than 20 ft, based on locations of shafts shown on historic drawings. The only shafts of concern associated with BH 6 drilling operations are shafts 58, 59, and 60 because the other shafts are sufficiently remote as to preclude intersection.

The existing shafts at MDA T NES (see Figure A-1.) are uniformly spaced on 12 ft centers. This spacing results in a distance between adjacent shaft edges of 4 ft. Although the vertical alignment or drift of these existing shafts is unknown, it must also be limited to the 4 ft otherwise the waste shafts would have intersected during their construction. The 4 ft constraint agrees with the physical restrictions of the common bucket auger equipment, which cannot deflect more than half the diameter of the auger before the drive shaft turning the auger encounters the side of the shaft being drilled.

The actual location of the bottom of the proposed exploratory borehole (BH 6) and the existing shafts could vary in the horizontal plane for two reasons: vertical offset angle and drift. The vertical offset angle is the angle of the mast or shaft of the drill rig with true vertical, while drift is the horizontal distance a drill bit moves from the direction of the mast that could be caused by, among other things, variations in the subsurface material. These two effects combined are called the offset. Using modern borehole drilling techniques the reasonable upper bound of maximum drift is 2 percent. This would result in a horizontal offset at the bottom of the borehole of as much as 2.08 ft as shown on Figure A-2. The corresponding offset for shaft 58 to intersect BH 6 would be 17.9 ft (20.0 ft–2.08 ft), or 23%. The maximum horizontal offset expected for any shaft is 4 ft, as described above, so a horizontal offset in the shaft of 17.9 ft is considered highly unlikely. However, this offset will be used to calculate the probability that the borehole and the shaft might intersect.

The probability for the intersection of these two offset areas defines the probability that the borehole and shaft will intersect (i.e., that the borehole and existing shaft each drift the maximum distance necessary and in a direction toward one another). The probability is calculated as follows:

$P_1 = \{\pi [D^2(\text{borehole})]/4\} / \{\pi [D^2(\text{borehole drift})]/4\} = [(1\text{ ft})^2 / (4.16\text{ ft})^2] = 0.058$

$P_2 = \{\pi [D^2(\text{shaft})]/4\} / \{\pi [D^2(\text{shaft drift})]/4\} = [(8\text{ ft})^2 / (35.8\text{ ft})^2] = 0.050$

$P_3 = 0.058 \times 0.050 =$ **0.003**, where

P1 = probability that the maximum borehole drift will line up with an existing shaft

P2 = probability that the existing shaft maximum drift will line up with borehole

P3 = probability that the maximum shaft and borehole drift will intersect with each other

This probability, 0.003, is very small, especially as it is based on the unlikely possibility that the shaft offset used in this analysis is over four times greater than the maximum offset expected. It is very unlikely that BH 6 will intersect any of the adjacent shafts (58, 59, 60) during drilling operations.

A-3.2 Potential Extraction of Sufficient Quantity and Composition

Estimates of the fissile and TRU waste for the cement paste disposed in the shafts at MDA T are provided in Table A-1. These data are based primarily upon a draft memorandum (Haaker 2003, 76097) dated

June 5, 2003 from R. Haaker to M. Thacker, entitled "MDA T Shafts Inventory Assessment" and are based on the data presented by Warren (1979, 00976). As stated in this memorandum, no firm evidence exists that any single shaft has more than 450 g of any fissile isotope, which is the single parameter subcritical limit for plutonium-239 as given by ANSI/ANS-8.1-1998, Nuclear Criticality Safety in Operations with Fissionable Materials Outside Reactors. Assuming the measurements of plutonium-239 content of the cement paste in the 61 shafts is normally distributed, the standard deviation about the mean plutonium-239 measurement is 71.3 g. For the uncertainty estimate for shaft 59, which has the highest content of plutonium-239 of the three shafts of concern (58, 59, and 60), the 44.2 g of plutonium-239 in shaft 59 would require (450 g - 44.2 g)/71.3 = 5.7 sigma variation from the mean to equal single parameter subcritical limit (450 g). Thus it is beyond extremely unlikely for any one of the shafts to even contain this amount of plutonium-239.

However, four 55-gal. drums containing a total of 713 g of uranium-233 were also disposed in either or both shafts 58 and 52. The actual distribution between these two shafts of the waste contained in the drums is unknown. Thus, the worst-case possibility is that in addition to the cement paste, shaft 58 might contain 713 g of uranium-233 within one of the four 55-gal. drums.

Table A-1
Material Inventory Estimates for Shafts 58, 59, 60

Shaft	^{239}Pu (g)	^{238}Pu (g)	^{240}Pu (g)	^{241}Am (g)	^{233}U (g)
58	7.7 [a]	0.009 [b]	0.5 [c]	8.1 [d]	≤713 [e]
59	44.2 [a]	0.052 [b]	2.7 [c]	31.0 [d]	0
60	38.2 [a]	0.045 [b]	2.3 [c]	32.8 [d]	0
Shaft totals (61 shafts)	2464 [f]	1.5 [f]	148 [f]	1112 [f]	713 [e]
Shaft average (61 shafts)	40.4	0.025	2.43	18.23	
Standard deviation (61 shafts)	+/- 71.3	+/- 0.018	+/- 0.956	+/- 13.11	
Subcriticality limits (g)	450				500

[a] Source: Warren 1979, 00976), Table 5.

[b] ^{238}Pu estimated at 0.00118 times ^{239}Pu (Haaker 2003, 76097).

[c] ^{240}Pu estimated at 6% of ^{239}Pu (Haaker 2003, 76097).

[d] Source: Warren 1979, 00976, corrected for radioactive decay to 2006.

[e] Source: Warren 1979, 00976, total amount contained in four 55-gal. drums distributed between shafts 52 and 58 in unknown proportions.

[f] Source: Haaker 2003, 76097.

[g] DOE G 421.1-1, 1999.

Drilling operations for BH 6 will employ a 1-ft-diameter auger that produces a 3-in.-diameter core sample extracted in 5-ft increments from the borehole. Figure A-3 provides a schematic drawing of the borehole auger proposed to be employed for BH 6. The maximum volume (3-in.-diameter, 5 ft long) of the split core material that can be extracted in a single drill increment is

$$\text{Split core volume} = \pi\,(D^2/4)\,H = \pi \times [(0.25\text{ ft})^2 / 4] \times 5\text{ ft} = 0.245\text{ ft}^3$$

For such a small volume to contain even a mass of 500 g of uranium-233, the ANSI/ANS-8.1 single parameter subcritical limit, the concentration of uranium-233 in the shaft (presumably within the 55-gal. drum) penetrated by the borehole must be 2041 g uranium-233 per ft^3. The volume of a single 55-gal. drum is 7.35 cubic ft and 713 g of uranium-233 uniformly distributed through a single drum volume is only 97 g uranium-233 per ft^3. In other words, at least 500 g of uranium-233 would have to be oriented preferentially along the drilling axis of the borehole within a volume of 0.245 ft^3 in the drum. This assumption implies a concentration of uranium-233 within the small volume intersected by the split core sample that is 21 times greater than the surrounding uranium-233 waste in the drum. Such an elevated, localized concentration and orientation of uranium-233 in the waste drum is beyond extremely unlikely.

The likelihood of these two conditions (interception of a waste shaft, availability of mass) happening alone is beyond extremely unlikely. However, as stated above these are necessary but not sufficient conditions for even a theoretical possibility of a criticality accident to exist. For example, the minimum practical critical mass plutonium-239 is 520 g. This requires that the plutonium-239 be uniformly distributed in water, in a single spherical unit ~17 L in volume and fully reflected by thick (>6 in.) water. The critical state may be attained with less volumes, with or without reflection, or different geometries, but all would require much more fissile material in relatively pure and concentrated form. This assumption is completely contrary to the nature of the waste buried within the waste shafts. Nothing about the process of drilling of the borehole, and removal of samples alone can change or concentrate the existing fissile material. In other words, there is no realistic probability of a criticality accident resulting from this activity.

A-4.0 GOOD CRITICALITY SAFETY PRACTICE RECOMMENDATIONS

A-4.1 Monitoring of Borehole Samples and Auger Cuttings

Radiological and visual monitoring of the borehole samples and the auger cuttings are recommended as a good criticality safety practices. Recording the level of radioactivity, coupled with examination of the appearance and composition of the respective borehole sample and auger cuttings, will help detect unexpected accumulations of fissile material.

A-4.2 Handling and Storage of Borehole Samples and Auger Cuttings

Some standard practices (described in DOE G 421.1-1, DOE Good Practices Guide, Criticality Safety Good Practices Program Guide for DOE Nonreactor Nuclear Facilities, August 25, 1999) for handling and storaging the borehole samples and auger cuttings are also recommended.

Table A-2
Criticality Safety, Good Practices for Samples Taken During MDA T Drilling

Geometry (core samples/cuttings)	Avoid compact, e.g., spherical material collection of shaft materials
Spacing (core samples/cuttings)	Space borehole core samples with at least 1 ft separation
Moderation control	Prevent moisture addition to samples/cuttings
Reflection control	Reduce sample contact with neutron reflectors
Fissile material mass control	Avoid combining samples or cuttings during drilling operations and sample storage

Source: DOE G 421.1-1, Table 5.7.4-1.

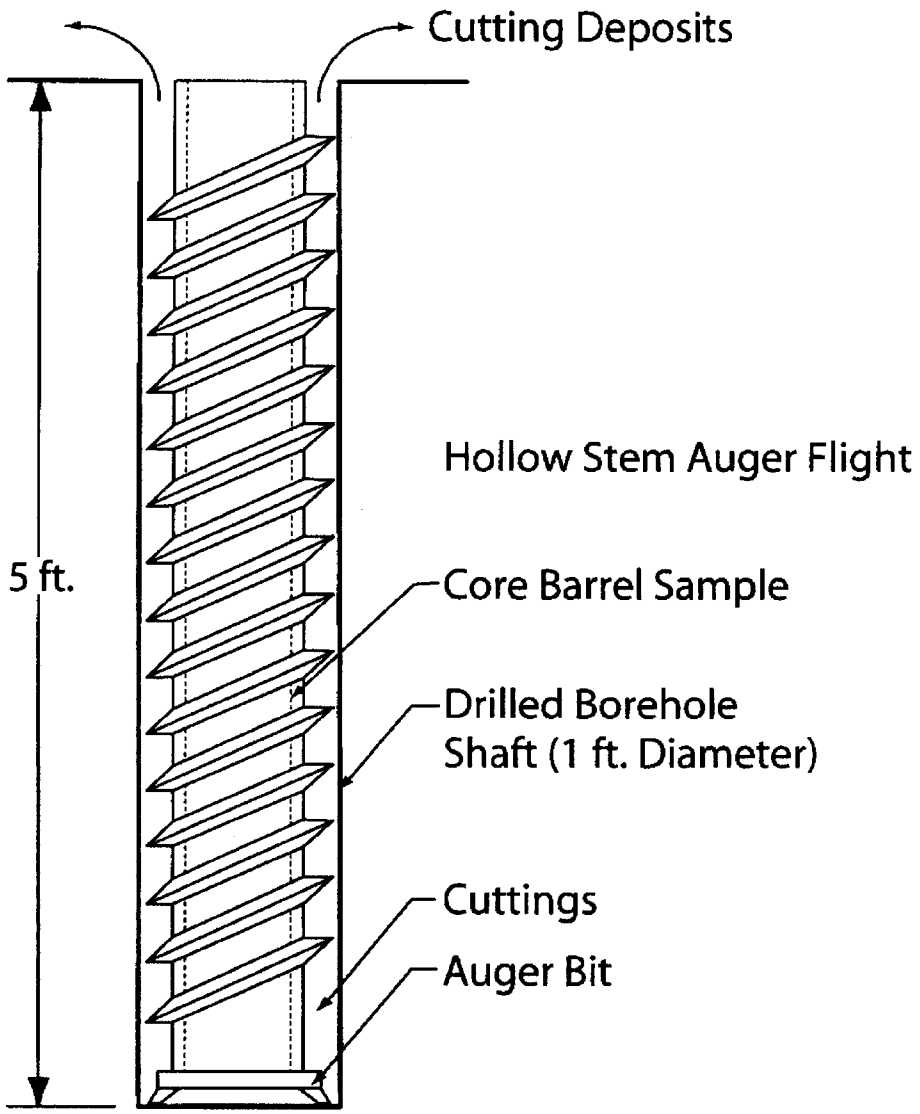

Figure A-3. Schematic of BH 6 auger

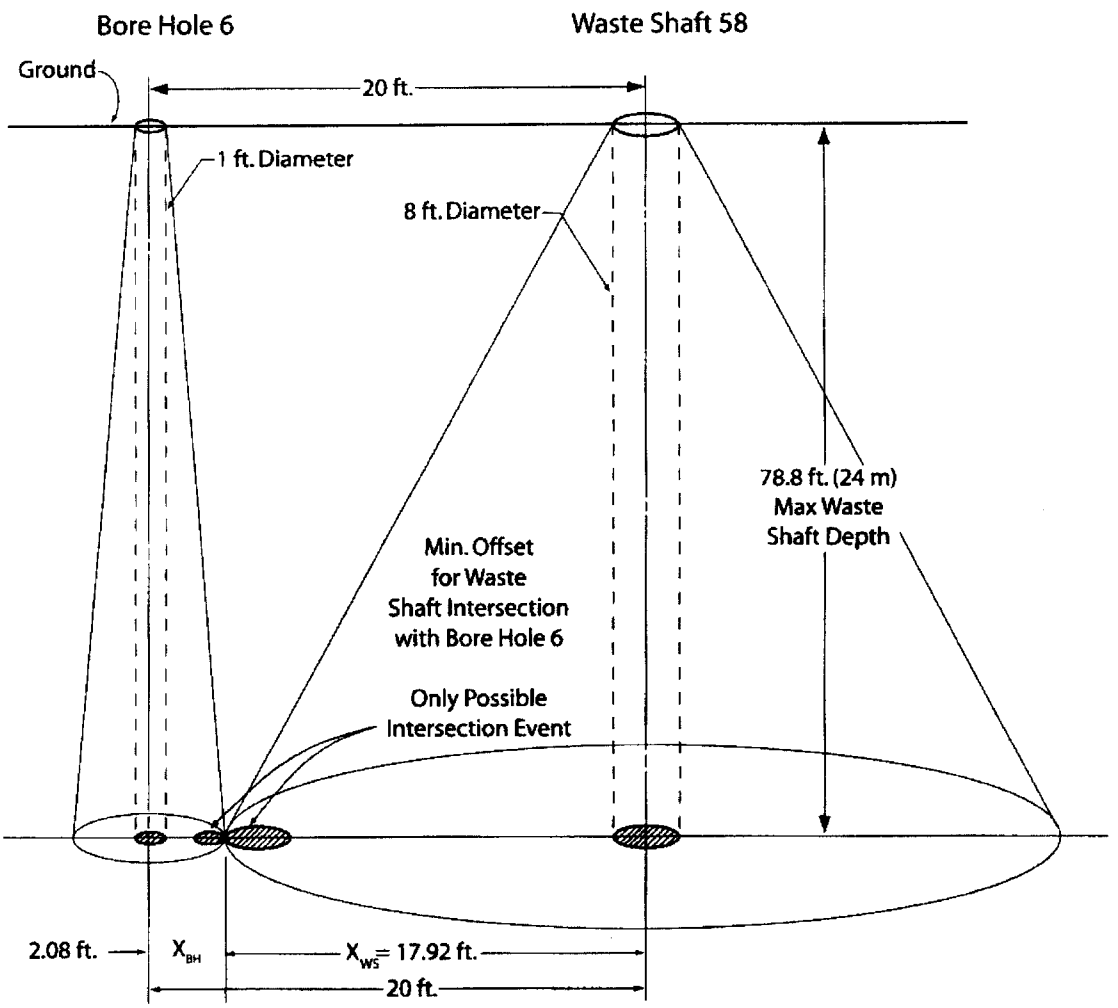

X_{BH} = (78.8 ft.) 0.02 + 0.5 ft. = 2.08 ft. (max. offset at 2%)

X_{WS} = 20 ft. - X_{BH} = 17.92 ft. (max. offset at 23%)

Figure A-2. Schematic conditions required for the intersection of BH 6 with a waste shaft

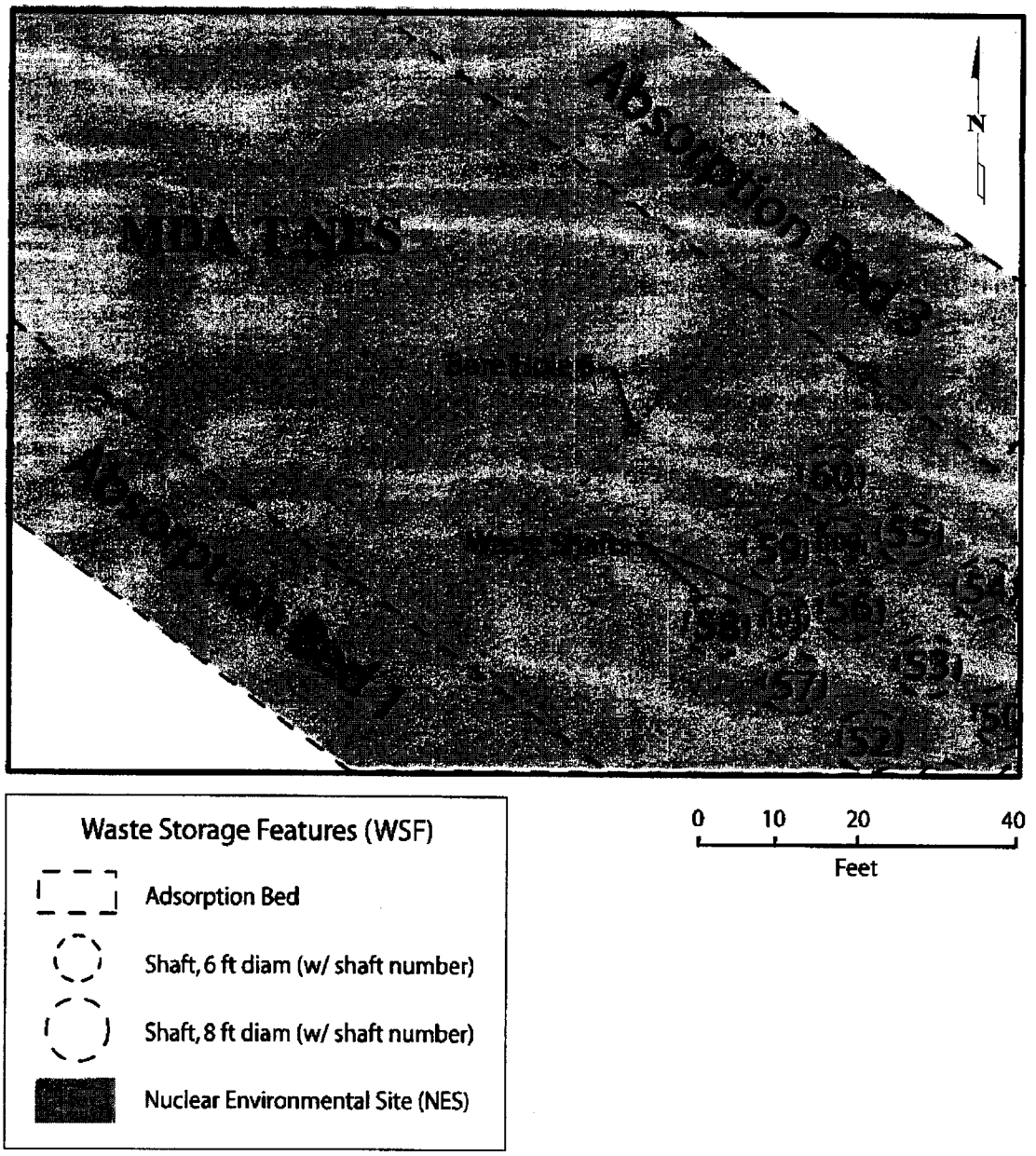

Figure A-1. MDA T (Source: LANL Drawing PM R05032D, Rev 2, dated 8 Aug 2005, "Absorption Bed and Shaft Waste Storage Features–Material Disposal Area T"

A-5.0 REFERENCES

Haaker, Rick, June 5, 2003. "MDA T Shafts Inventory Assessment," Los Alamos National Laboratory memorandum to M. Thacker from R. Haaker, Los Alamos, New Mexico. (Haaker 2003, 76097)

LANL (Los Alamos National Laboratory), November 2004. "Documented Safety Analysis for Surveillance and Maintenance of Nuclear Environmental Sites at Los Alamos National Laboratory," Los Alamos National Laboratory document LA-UR-04-7505, Los Alamos, New Mexico. (LANL 2004, 88713)

Warren, J.L., 1979. "Radionuclide Content of Area T Shafts," Los Alamos Scientific Laboratory memorandum H-7B-79-9 from J.L. Warren to M.A. Rogers dated 27 February 1979, Los Alamos, New Mexico (Warren 1979, 00976).

Walker, L.J., September 01, 1981. "Alternative Transuranic Waste Management Strategies at Los Alamos National Laboratory", Los Alamos National Laboratory report LA-8982-MS, Los Alamos, New Mexico. (Walker 1981, 06277)