Document Discussion

Return To Library > Records > ERID-95001 through ERID-95500 > ERID-095044 1)FINAL WELL REHABILITATION REPORT FOR CHARACTERIZATION WELL R-12 LOS ALAMOS NATIONAL LABORATORY PROJECT NO. 73885 2) 2 CDS ATTACHED

Created By:	Melissa E. Redman/USERS/LANL
File name:	Target-ERID #.pdf
Version:	3.0
Document Type:	RPF Record
Description:	RECORD SUBMITTED BY DEBBIE BRYAN, LWSP

Document Details:

Title:	ERID-095044 1)FINAL WELL REHABILITATION REPORT FOR CHARACTERIZATION WELL R-12 LOS ALAMOS NATIONAL LABORATORY PROJECT NO. 73885 2) 2 CDS ATTACHED
ERID Number.StartPage:	ERID-095044
Office of Record:	ENV-ERSS
Date Received:	03/13/2007
Official Use Only:	N
Page Count:	51
Record Type:	Report
Document Date:	12/01/2006
To:(Addressees - Organization) *(separate multiple values with semicolons)*	THE US DEPARTMENT OF ENERGY AND THE NATIONAL NUCLEAR SECURITY ADMINISTRATION THROUGH THE US ARMY CORPS OF ENGINEERS SACRAMENTO DISTRICT
From:(Senders - Organization) *(separate multiple values with semicolons)*	KLEINFELDER INC
Other Document Number(s): *(separate multiple values with semicolons)*	PROJECT N0. 73885 ALB-IMF-1.6-3
TA: *separate multiple values with semicolons)*	N/A
PRS Number(s): *(separate multiple values with semicolons)*	N/A
Record Box Number:	

*** Denotes Fields that are mandatory.**

To download this file, right mouse click on the file and select 'Save to Disk' or 'Save Target as'

Target-ERID #.pdf <-- This link points to this version.

To check-out and/or edit this file, select Edit Document or Check Out Document from the Document menu above.

14642

FINAL
WELL REHABILITATION REPORT FOR CHARACTERIZATION WELL R-12
LOS ALAMOS NATIONAL LABORATORY
LOS ALAMOS, NEW MEXICO
PROJECT NO. 73885

Prepared for:

The US Department of Energy and the
National Nuclear Security Administration through the
US Army Corps of Engineers
Sacramento District

Prepared by:

KLEINFELDER

8300 Jefferson NE, Suite B
Albuquerque, New Mexico 87113

December 2006

TABLE OF CONTENTS

LIST OF ACRONYMS AND ABBREVIATIONS ii
1.0 INTRODUCTION 1
1.1 Field Responsibilities and Training 4
1.1.1 Health and Safety Training 4
2.0 SITE PREPARATION 4
3.0 REHABILITATION ACTIVITIES 4
3.1 Removal of the Westbay Sampling System 5
3.2 Video Logging 5
3.3 Specific Capacity Tests 5
3.3.1 Upper Screened Interval 5
3.3.2 Middle Screened Interval 6
3.3.3 Lower Screened Interval 7
3.4 Groundwater Sample Collection 8
3.5 R-12 Well Status 8
4.0 INVESTIGATION-DERIVED WASTE 9
5.0 SITE RESTORATION 9
6.0 SUMMARY 9
7.0 REFERENCES 11

Figures

1.0-1 Site Location Map
1.0-2 R-12 Well Construction
3.3-1 Water Quality Parameters During Upper Screened Interval Test
3.3-2 Water Quality Parameters During Middle Screened Interval Test
3.3-3 Water Quality Parameters for the Lower Screened Interval Tests
3.5-1 R-12 Well Schematic – October 2006

Table

3.3-1 Summary of Specific Capacity Test Data

Appendices

Appendix A DVD of Video Log
Appendix B Water Quality Parameters Measured During Specific Capacity Tests

LIST OF ACRONYMS AND ABBREVIATIONS

bgs	below ground surface
BMPs	Best Management Practices
°C	degrees Celsius
DOE	US Department of Energy
DVD	digital video disc
ft	foot/feet
gal.	gallon/gallons
gpm	gallons per minute
hour/hours	hr/hrs
hp	horsepower
ID	inside diameter
in.	inch/inches
Kleinfelder	Kleinfelder, Inc.
LANL	Los Alamos National Laboratory
min	minute/minutes
mV	millivolts
NTUs	nephelometric turbidity units
OD	outside diameter
ORP	oxidation-reduction potential
SC	specific conductance
SOPs	Standard Operating Procedures
SSHASP	Site-Specific Health and Safety Plan
µS/cm	microSiemens per centimeter
WDC	WDC Exploration & Wells

1.0 INTRODUCTION

This well rehabilitation report presents the activities associated with the rehabilitation of Regional Characterization Well R-12 (R-12) at Los Alamos National Laboratory (LANL). R-12 was installed in January 2000 for the United States Department of Energy (DOE) as part of the LANL "Hydrogeologic Work Plan" (LANL 1998). The activities summarized herein were originally identified in the "Interim Measures Work Plan for Chromium Contamination in Groundwater," (LANL 2006), and detailed in the "Work Plan for Rehabilitation of Regional Well R-12, Final," (Kleinfelder 2006a). The United States Army Corps of Engineers contracted Kleinfelder, Inc. (Kleinfelder) to perform this work at the direction of DOE and LANL personnel.

R-12 is sited in Sandia Canyon within Technical Area 72 (Figure 1.0-1) to provide hydrogeologic and water quality data for intermediate perched zones and the regional aquifer near the Sandia and Los Alamos Canyon watersheds. It also provides early warning data for water supply well PM-1, located approximately 0.35 miles to the east-northeast.

R-12 was drilled to 886 feet (ft) below ground surface (bgs) using air-rotary and casing-advance techniques, and was completed with three screened intervals, the upper two in intermediate perched zones and the lower one in the regional aquifer (LANL 2000a) (Figure 1.0-2). It was constructed with 4.3-inch (in.) inside diameter (ID)/5.0-in. outside diameter (OD) mild steel casing from the top of casing to 354 ft bgs. Below 354 ft bgs, the well casing was constructed with 4.5-in. ID/5.0-in. OD stainless steel casing to the total depth of 869 ft bgs. Well screens are rod-based stainless steel (4.5-in. ID/5.1-in. OD). The upper and lower screens are 0.01-in. slot size; the middle screen is 0.005-in. slot size. A Westbay multi-port sampling system was installed in the well after completion.

During recent sampling events, little water was produced from the upper screened interval (459 to 467.5 ft bgs), and no water could be obtained from the middle screen (504.5 to 508 ft bgs). The lower screened interval (801 ft to 839 ft bgs) in the regional aquifer produced sufficient amounts of groundwater for sampling events.

The well rehabilitation efforts were originally designed to focus on the upper and lower screens because it was assumed the middle intermediate perched zone was no longer productive. However, during rehabilitation activities, it was discovered that the sampling port at the middle screen had malfunctioned and that the middle zone was still productive. After that discovery, rehabilitation efforts were expanded to focus on all three zones.

The scope of work summarized herein includes:

- Removing the Westbay multi-port sampling system
- Video logging the well interior
- Conducting constant rate specific capacity tests on all three screened intervals
- Collecting water samples for waste characterization and disposal purposes
- Installing packers to isolate the three screened intervals at the completion of activities.

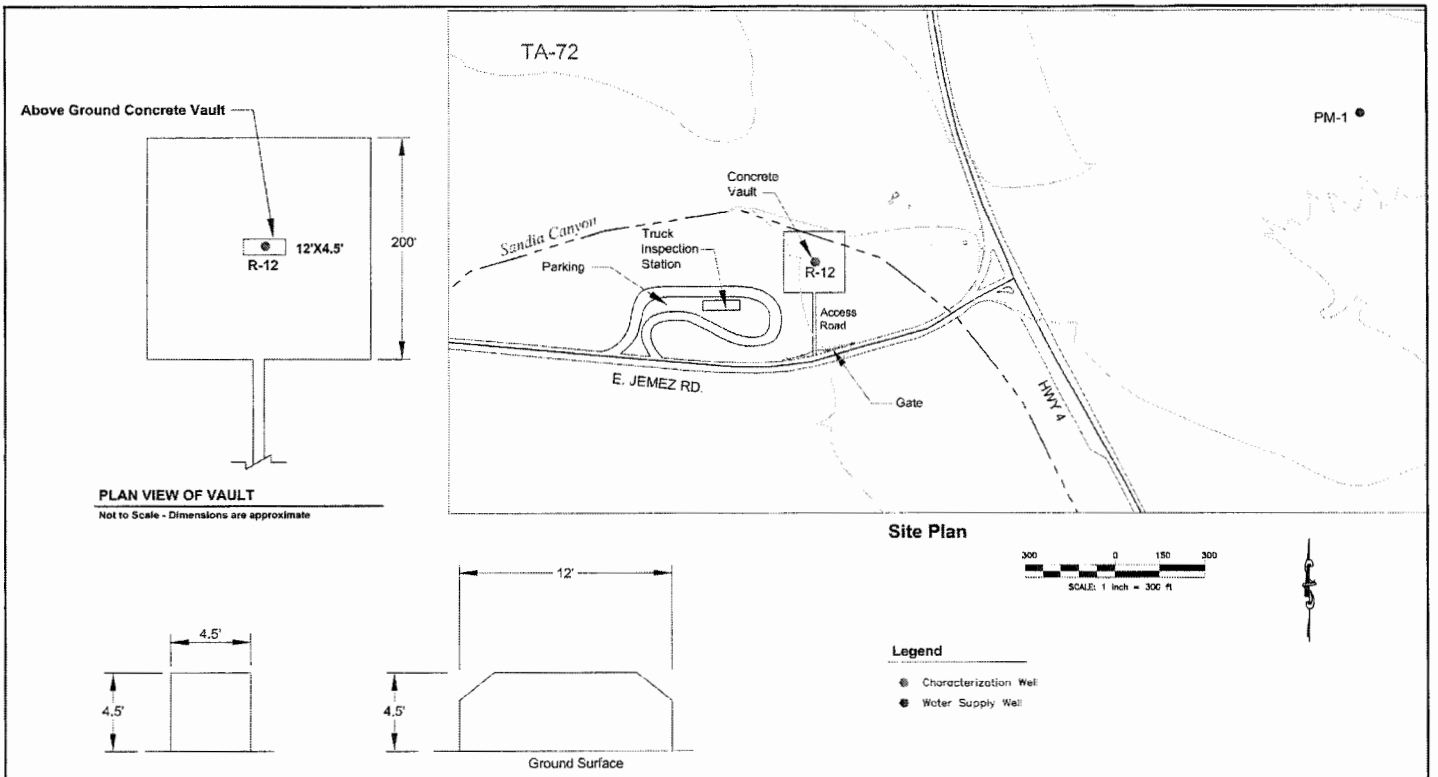

KLEINFELDER		Site Location Map Regional Well R-12 Sandia Canyon Los Alamos, New Mexico	FIGURE 1.0-1
Drawn By: D. Tideman	Date: October 2006		
Project No.: 73885	Filename: 73885_02_0.dwg		
Scale: 1" = 300'	Revision: 1		

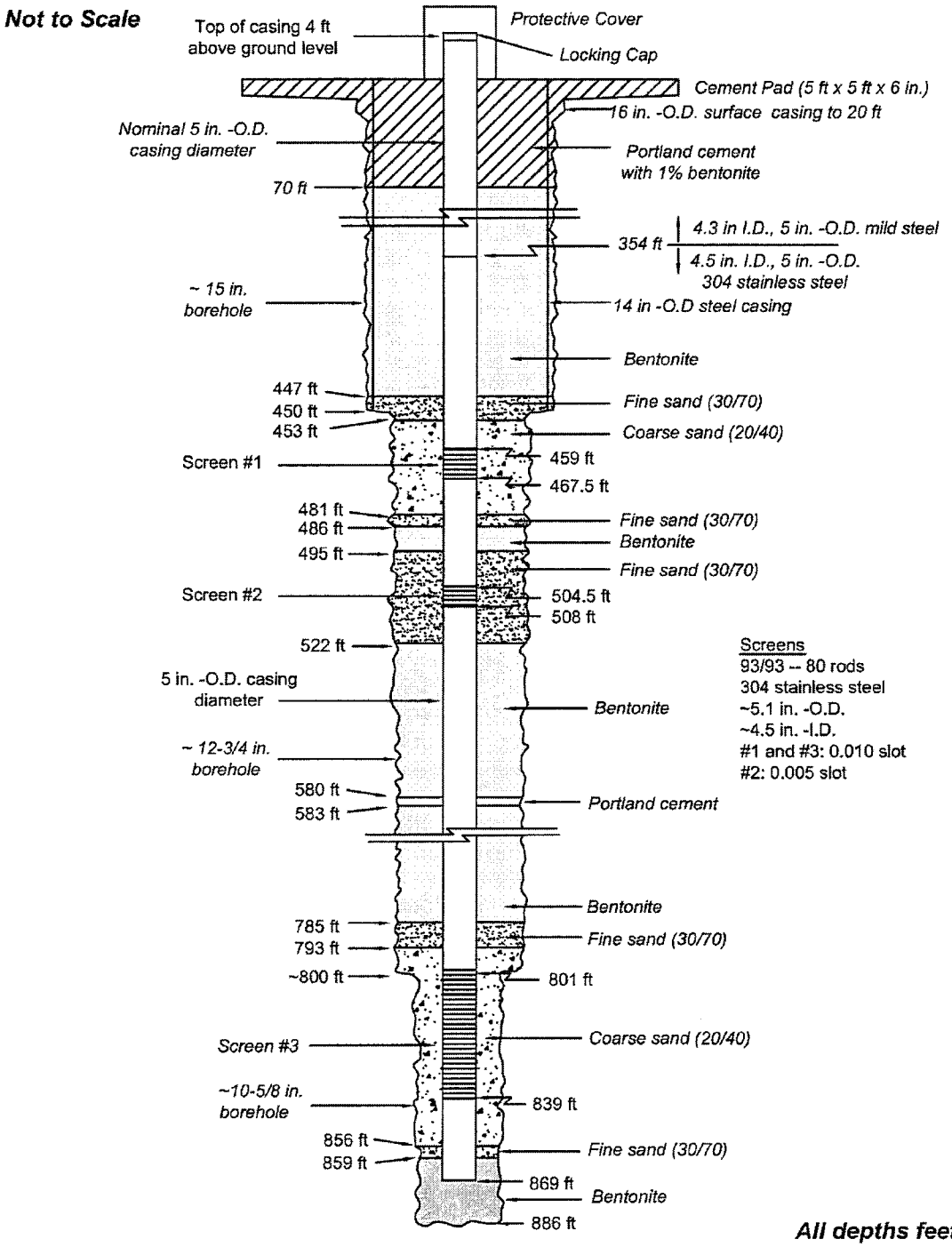

NOTES: 1) This Figure is from "Characterization Well R-12 Completion Report", December 2000, LA-13822-MS.
2) Depths for screens are for actual screen intervals, not joints.

KLEINFELDER		R-12 Well Construction Sandia Canyon Los Alamos, New Mexico	FIGURE **1.0-2**
Drawn By: D. Tideman	Date: October 2006		
Project No.: 73885	Filename: 73885_03_0.dwg		

1.1 Field Responsibilities and Training

A Kleinfelder representative was present during each work shift. The field geologist maintained field notes detailing general site activities, compiled and submitted daily reports and forms, kept track of downhole tools and lengths, and conducted daily safety meetings and equipment inspections. The field geologist was also responsible for compliance with established health and safety requirements and served as the site safety officer in the absence of the project health and safety officer. Work was performed in 12-hour (hr) shifts, generally during daylight hours.

Enviroworks, LLC conducted site preparation and restoration. WDC Exploration and Wells, Inc. (WDC) performed rehabilitation activities using a Pulstar 12000 winch line rig or equivalent with a two-man crew (operator and helper). David Schafer and Associates provided technical expertise for the specific capacity tests.

1.1.1 Health and Safety Training

All staff were trained to the site-specific health and safety plan (SSHASP) (Kleinfelder 2006b), LANL standard operating procedures (SOPs) (LANL 2000b; LANL 2001; LANL 2002), the contractor's quality management plan (Kleinfelder 2006c), and applicable quality procedures as appropriate to their assigned roles. The Field Manager was responsible for monitoring adherence to the project plans and SSHASP requirements. Field personnel at this site also took LANL general employee training, fire-watch training, general orientation, health and safety training, reading and following LANL SOPs, and Occupational Safety and Health Act, 29 Code of Federal Regulations 1910.120 (HAZWOPER 40-hr) training.

2.0 SITE PREPARATION

Kleinfelder coordinated the following site preparation activities prior to well rehabilitation:

- Radiological surveys of equipment by LANL radiological control technicians
- Delivery of a mobile field trailer
- Delivery of 21,000-gallon (gal.) water storage frac tanks on Visqueen liners surrounded by straw-bale berms as Best Management Practices (BMPs)
- Delivery of a storage tank for potable water
- Installation of a water tank and pump for fire suppression and health and safety purposes.

3.0 REHABILITATION ACTIVITIES

Rehabilitation activities consisted of removing the Westbay sampling system, video logging the well interior (conducted by LANL), conducting specific capacity tests on all three screened intervals, monitoring water quality parameters during the tests, and collecting groundwater samples for geochemical analyses (performed by LANL). The Kleinfelder Work Plan (Kleinfelder 2006a) also specified that the upper and lower screens would be redeveloped by swabbing/bailing, jetting and/or pumping after the specific capacity tests were conducted. However, at the direction of DOE, this phase of work was not performed because the water quality parameters measured during the specific capacity tests had stabilized.

3.1 Removal of the Westbay Sampling System

WDC and Westbay personnel removed the R-12 Westbay sampling system between September 21 and 24, 2006. They initially removed the three transducers and solar panel. Next, they deflated and removed the seven Westbay packers, and lastly they removed the piping and sampling ports from the well. During the final phase, Westbay personnel observed that a groove in the piping had prevented the middle screened interval sampling port from seating properly, preventing water collection from that zone. The cause of the groove was unknown, and the representative ordered a replacement part to solve the problem.

After removal, the Westbay system components were steam-cleaned and rinsed with deionized water, dried, and placed in plastic bags. The system was placed into storage at the former Field Support Facility.

3.2 Video Logging

LANL personnel ran a downhole video log on September 25, 2006. Water was observed to be entering the well via the upper and middle screened intervals, with the standing water level below the middle screened interval. Air bubbles in the standing water precluded examination of the lower screen. A copy of the video log on DVD is included in Appendix A.

3.3 Specific Capacity Tests

The original work scope called for conducting specific capacity tests on only the upper and lower water-bearing zones; however, because water was observed to be entering at the middle screened interval during video logging, Kleinfelder was directed to conduct a specific capacity test on that zone as well.

Initially, all three screened intervals were isolated and pumped for 12 hours (hrs) at a constant rate to measure the specific capacities of the three zones. Later, a larger submersible pump was placed in the isolated lower zone and three separate 10-hr constant rate specific capacity tests were run.

3.3.1 Upper Screened Interval

On September 28, 2006, a packer was installed to isolate the upper screened interval and a 3-in., 1-horsepower (hp) Grundfos submersible pump was installed with the intake at 461.7 ft bgs. After pump installation, a 25-minute (min) trial test was conducted on the upper screened interval; the zone was pumped at 0.8 gallons per minutes (gpm) and 17.1 gal. were removed.

On September 29, 2006, a 12-hr constant rate pump test was conducted to determine the specific capacity of the uppermost water-bearing zone. A total of 859.9 gal. was removed with an average pumping rate of 1.2 gpm and a net drawdown of 12.4 ft; the resultant specific capacity for the upper zone was 0.1 gpm/ft. The data for this specific capacity test, along with the other constant rate tests, are presented in Table 3.3-1.

The water quality parameters pH, temperature, specific conductance, turbidity and oxidation-reduction potential (ORP) were measured periodically during the pump test and are shown in Figure 3.3-1 and tabulated in Appendix B. The rapid stabilization of water quality parameters

during the specific capacity testing indicates that redevelopment goals were met by pumping during the specific capacity test.

Table 3.3-1 Summary of Specific Capacity Test Data

DATE	SCREEN/ INTERVAL (ft)	PUMP INTAKE (ft bgs)	PUMP SIZE (hp)	TOTAL VOLUME REMOVED (gal.)	AVERAGE PUMPING RATE (gpm)	DRAW-DOWN (ft)	SPECIFIC CAPACITY (gpm/ft)
9/29/06	1 – UPPER* (459-467.5)	461.7	1	859.9	1.2	12.4	0.1
10/01/06	2 – MIDDLE* (504.5-508)	503.8	1	2,376.1	3.3	3.4	1.0
9/27/06	3 – LOWER* (801-839)	835.1	2	1,447.9	2.1	0.2	10.5
10/16/06	3 – LOWER** (801-839)	832.9	7.5	11,392.8	19.0	5.8	3.3
10/17/06	3 – LOWER** (801-839)	832.9	7.5	11,513.3	19.2	4.4	4.4
10/18/06	3 – LOWER** (801-839)	832.9	7.5	11,591.4	19.3	3.9	4.9

* 12-hr pump test; ** 10-hr pump test

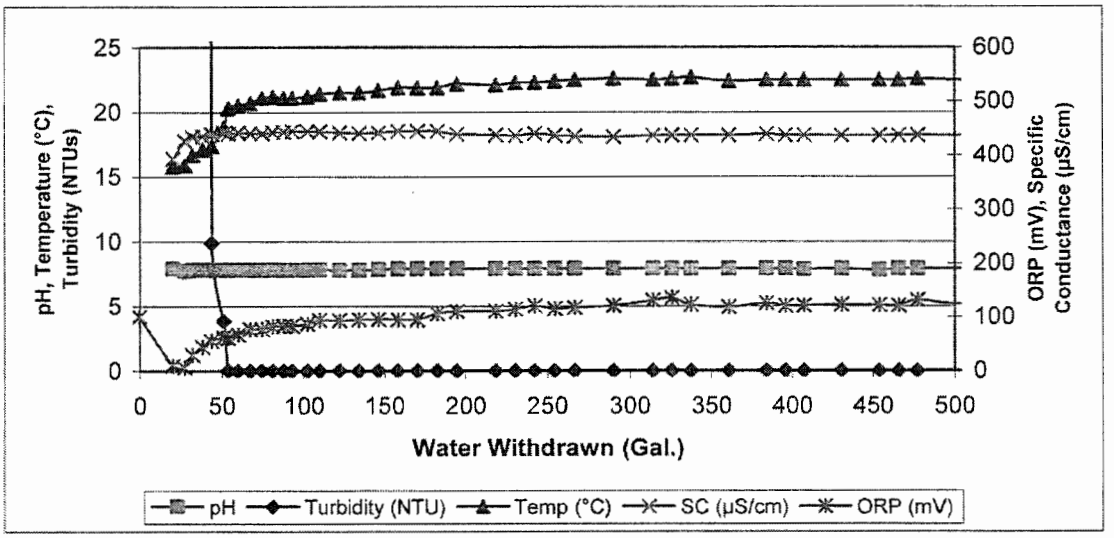

Figure 3.3-1 Water Quality Parameters During Upper Screened Interval Test

3.3.2 Middle Screened Interval

On September 30, 2006, packers were installed to isolate the middle screened interval and a 3-in., 1-hp Grundfos submersible pump was installed with the intake at 503.8 ft bgs. After pump installation, a 26-min trial test was conducted on the middle screened interval; the zone was pumped at 3.4 gpm and 99.8 gal. were removed.

On October 1, 2006, a 12-hr constant rate pump test was conducted to determine the specific capacity of the middle water-bearing zone. A total of 2,376.1 gal. was removed with an average pumping rate of 3.3 gpm and a net drawdown of 3.4 ft; the resultant specific capacity for the middle zone was 1.0 gpm/ft, as shown in Table 3.3-1.

As the specific capacity tests were being conducted, David Schafer observed that the intermediate perched zone at the middle screened interval, previously thought to be non-productive, was very productive. In order to estimate the flow of water entering the well from this zone, he measured the depth to water in the well over time with an inflated packer located below the middle screen. Based on these measurements, Schafer estimated the inflow into the middle screen was approximately 73 gpm.

The water quality parameters pH, temperature, specific conductance, turbidity and ORP were measured periodically during the pump test and are shown in Figure 3.3-2 and tabulated in Appendix B. Water quality parameters rapidly stabilized during specific capacity testing, indicating that well rehabilitation was accomplished during the test.

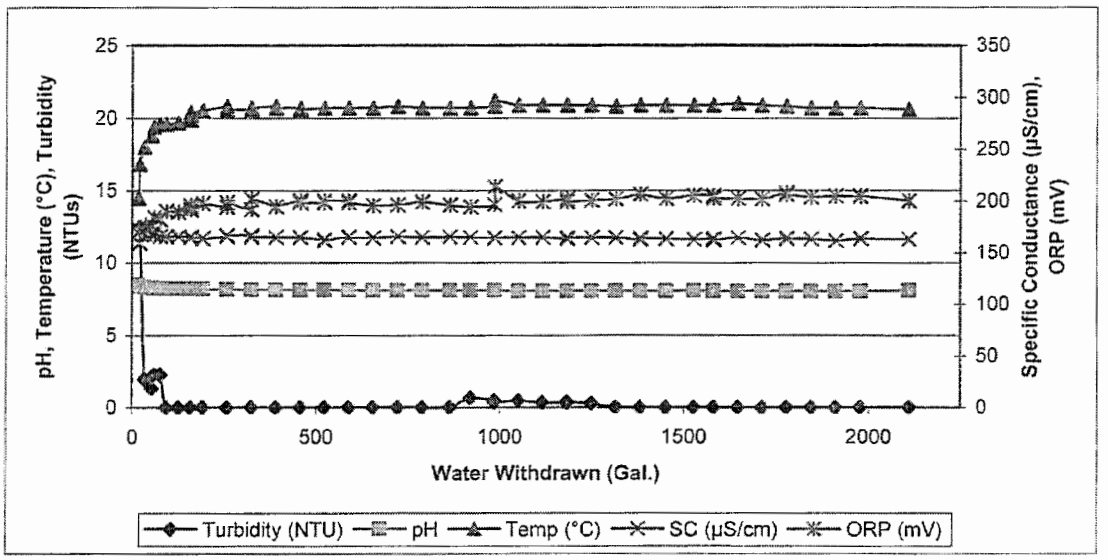

Figure 3.3-2 Water Quality Parameters During Middle Screened Interval Test

3.3.3 Lower Screened Interval

A 12-hr constant rate specific capacity test was conducted on the lower screened interval on September 27, 2006; three consecutive 10-hr specific capacity tests were conducted on October 16, 17 and 18, 2006. All four tests will be summarized below, and the summary data are presented in Table 3.3-1.

On September 26, 2006, a packer was installed to isolate the lower screened interval and a 4-in., 2-hp Grundfos submersible pump was installed with the intake at 835.1 ft bgs. After pump installation, a 27-min trial test was conducted on the lower screened interval; the zone was pumped at 2.2 gpm and 52.5 gal. were removed.

On September 27, 2006, a 12-hr constant rate pump test was conducted to determine the specific capacity of the lower water-bearing zone. A total of 1,447.9 gal. was removed with an average pumping rate of 2.1 gpm and a net drawdown of 0.2 ft; the resultant specific capacity for the middle zone was 10.5 gpm/ft.

From October 16 to 18, 2006, three 10-hr pump tests were run on three consecutive days. A larger 4-in., 7.5-hp Grundfos submersible pump was used for these tests, and it was installed with the intake at 832.9 ft bgs and with a packer above the screened interval. The summary data for the three tests are presented in Table 3.3-1. The average pumping rate for the 3 days was 19.2 gpm, and specific capacities were measured at 3.3, 4.4 and 4.9 gpm/ft. Note that the order of magnitude increase in pumping rate resulted in an order of magnitude decrease in the calculated specific capacity.

The water quality parameters pH, temperature, specific conductance, turbidity and ORP were measured periodically during all of the lower screen pumping tests; data for the three consecutive pump tests are shown in Figure 3.3-3 and tabulated in Appendix B.

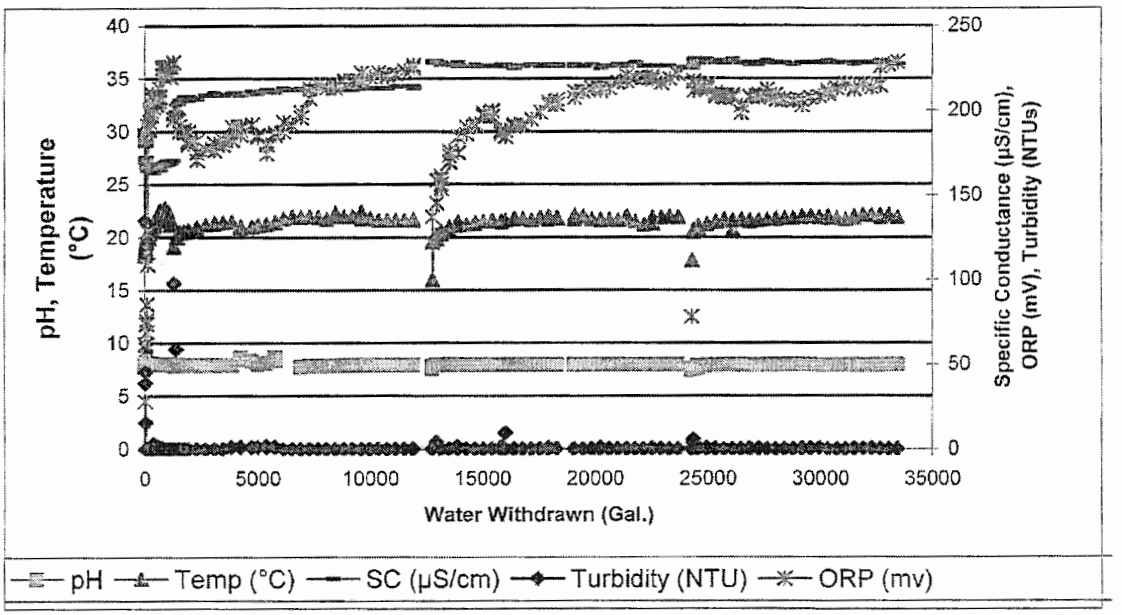

Figure 3.3-3 Water Quality Parameters for the Lower Screened Interval Tests

3.4 Groundwater Sample Collection

LANL field personnel collected groundwater samples for laboratory analysis during the pumping activities. The data will be included in the LANL Interim Measures Chromium Investigation Report.

3.5 R-12 Well Status

Following the well rehabilitation tasks, Kleinfelder installed two packers above and below the middle screened interval to isolate the three water-bearing zones as shown in Figure 3.5-1. DOE has decided not to re-install the Westbay sampling system at R-12 and is currently evaluating options for a replacement sampling system.

4.0 INVESTIGATION-DERIVED WASTE

During R-12 well rehabilitation efforts, approximately 39,000 gal. of water were generated and stored onsite in two 21,000-gal. frac tanks. Kleinfelder field personnel collected samples to characterize the groundwater in mid-November 2006. Following receipt of the analytical data and discharge approval from the New Mexico Environment Department, R-12 water will be applied to the land surface using sprinkler systems in accordance with the terms and conditions of the Notice of Intent dated August 2, 2001.

Other investigation-derived wastes generated during the project, such as contact waste, were stored and handled in accordance with the Waste Characterization Strategy contained in Appendix A of the R-12 rehabilitation Work Plan (Kleinfelder 2006a).

5.0 SITE RESTORATION

After the R-12 groundwater has been properly disposed, all equipment, as well as BMPs used during rehabilitation activities, will be removed from the site. Frac tanks will be drained and taken off site. Kleinfelder-owned locks will be removed from the wellhead and access road gate and replaced with LANL-owned locks.

6.0 SUMMARY

The following well rehabilitation activities were successfully conducted at R-12:

- Removal of the Westbay sampling system
- Video logging the well interior
- Constant rate specific capacity tests on all three screened intervals
- Collection of water samples for waste characterization and disposal purposes
- Installation of packers to isolate the three screened intervals at the completion of well rehabilitation.

DOE directed the following modifications to the Work Plan:

- A specific capacity test was requested for the middle screened interval when video logging revealed a productive water-bearing zone at that depth.
- The upper and lower screens were not developed by swabbing/bailing or jetting; however, three additional 10-hr specific capacity tests with a larger pump effectively accomplished redevelopment of the lower screened interval. Water quality parameter stabilized quickly during the specific capacity test for the upper screen.
- The Westbay sampling system was not re-installed as planned and replacement sampling system options are being evaluated.

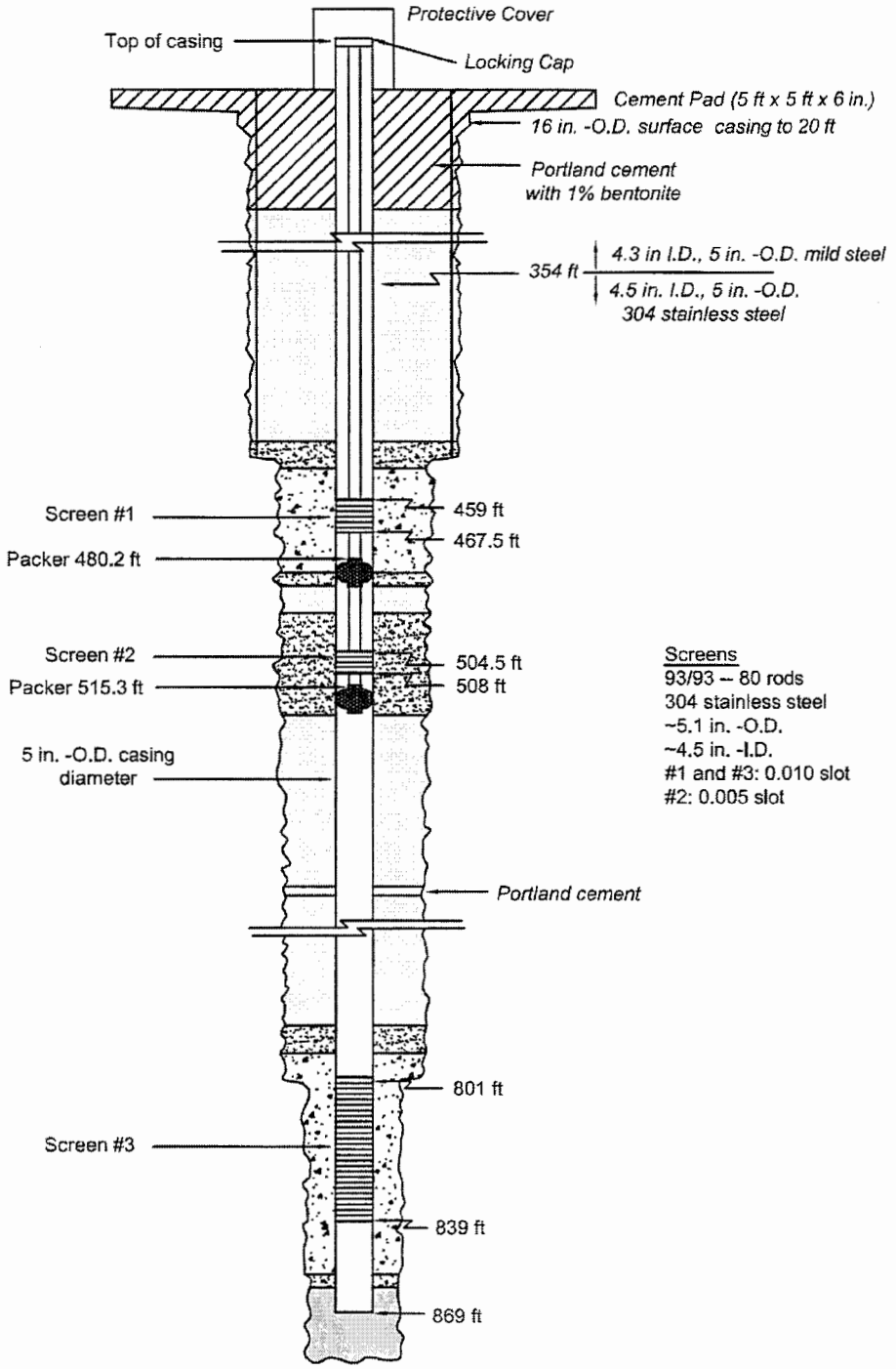

Screens
93/93 -- 80 rods
304 stainless steel
~5.1 in. -O.D.
~4.5 in. -I.D.
#1 and #3: 0.010 slot
#2: 0.005 slot

All depths feet below ground surface

NOTE: This Figure is modified from "Characterization Well R-12 Completion Report", December 2000, LA-13822-MS.

KLEINFELDER		R-12 Well Schematic - October 2006 Sandia Canyon Los Alamos, New Mexico	FIGURE **3.5-1**
Drawn By: D. Tideman	Date: October 2006		
Project No.: 73885	Filename: 73885_03_0.dwg		

7.0 REFERENCES

Kleinfelder, Inc. 2006a. "Work Plan for Rehabilitation of Regional Well R-12, Final," September 2006.

Kleinfelder, Inc. 2006b. "Site-Specifc Health and Safety Plan, Rehabilitation of Regional Characterization Well R-12, Final," September 2006.

Kleinfelder, Inc. 2006c. "Contractor Quality Management Program for Sandia Canyon Wells & Characterization Coreholes Program, Revision 0," August 4, 2006

LANL 1998. "Hydrogeologic Work Plan," ER1998-59599, Los Alamos, New Mexico.

LANL 2000a. "Characterization Well R-12 Completion Report," LA-13822-MS, Los Alamos, New Mexico, December 2000.

LANL 2000b. "Environmental Restoration Project Standard Operating Procedure for Handing, Packaging, and Transporting Field Samples," ER-SOP-1.03, Revision 2, Los Alamos, New Mexico.

LANL 2001. "Environmental Restoration Project Standard Operating Procedure for Sample Containers and Preservation," ER-SOP-1.02, Revision 1, Los Alamos, New Mexico.

LANL 2002. "Environmental Restoration Project Standard Operating Procedure for Sample Control and Field Documentation," ER-SOP-1.04, Revision 5, Los Alamos, New Mexico.

LANL 2006. "Interim Measures Work Plan for Chromium Contamination in Groundwater," ER2006-0214, Los Alamos, New Mexico.

Appendix A

DVD of Video Log

Appendix B

Water Quality Parameters Measured During Specific Capacity Tests

WELL DEVELOPMENT (Cover Page)

Site/Screen Name: **R-12 Upper**
Location: **Sandia Canyon**
Lead Company: **Kleinfelder Inc.**
Supporting Company: **WDC/DS&A**

Project No.: **73885.4.2**
Document Originator: **Steven W. Baur**
Document Reviewer: **B. Lucero**
Review Complete:

FINAL WELL DEVELOPMENT PARAMETERS

Well Total Depth: 869 **ft bgs** **Screened Interval:** 459 **ft bgs** **to** 467 **ft bgs**

Total Volume Withdrawn (Bailing): None **gals.** **Total Volume Withdrawn (Pumping):** 859.85 **gals.**

DEVELOPMENT TOOLS

Tool:	Description:	Used From	to
Pump	Grundfos 1 hp 5 gpm	9/29/2006	9/29/2006

WELL DEVELOPMENT DATA

Date	Time	Tool	Totalizer Reading	Volume Withdrawn (gal.)	Cumulative Volume Withdrawn (gal.)	pH	Temp (°C)	SC (µS/cm)	Turbidity (NTU)	Pump Intake (ft. bgs.)	Comments
9/29/2006	7:10	pump	216335.7	0	0	N/A	N/A	N/A	N/A	461.7	ORP/mv
9/29/2006	7:18	pump	216356.4	20.7	20.7	7.9	15.8	394	>1000	461.7	100.3
9/29/2006	7:23	pump	216363.3	6.9	27.6	7.7	15.9	427	>1000	461.7	10.4
9/29/2006	7:28	pump	216368.2	4.9	32.5	7.8	16.7	434	>1000	461.7	6.5
9/29/2006	7:33	pump	216374.35	6.15	38.65	7.8	17.1	435	>1000	461.7	29.6
9/29/2006	7:38	pump	216379.75	5.4	44.05	7.8	17.4	439	9.86	461.7	44.7
9/29/2006	7:43	pump	216387.3	7.55	51.6	7.8	18.8	442	3.85	461.7	56

WELL DEVELOPMENT (Continued)

Site/Screen Name: **R-12 Upper** Project No.: **73885.4.2**

Location: **Sandia Canyon** Document Originator: **Steven W. Baur**

DEVELOPMENT TOOLS

Tool:	Description:	Used From	to
Pump	Grundfos 1 hp 5 gpm	9/29/2006	9/29/2006

WELL DEVELOPMENT DATA (Continued)

Date	Time	Tool	Totalizer Reading	Volume Withdrawn (gal.)	Cumulative Volume Withdrawn (gal.)	pH	Temp (°C)	SC (µS/cm)	Turbidity (NTU)	Pump Intake (ft. bgs.)	Comments
9/29/2006	7:48	pump	216389.85	2.55	54.15	7.8	20.3	440.0	3.81	461.7	62.2
9/29/2006	7:53	pump	216396.1	6.25	60.4	7.8	20.5	442.0	3.81	461.7	61.2
9/29/2006	7:58	pump	216403.3	7.2	67.6	7.8	20.7	441.0	3.17	461.7	67.4
9/29/2006	8:03	pump	216410.5	7.2	74.8	7.8	21.1	440.0	3.17	461.7	76.9
9/29/2006	8:08	pump	N/A	N/A	N/A	7.8	21.2	443.0	2.99	461.7	77.4
9/29/2006	8:13	pump	216423.7	13.2	88	7.8	21.1	443.0	2.63	461.7	82.6
9/29/2006	8:18	pump	N/A	N/A	N/A	7.8	21.1	445.0	3.03	461.7	83.5
9/29/2006	8:23	pump	216438.4	14.7	102.7	7.8	21.2	444.0	3.03	461.7	83.2
9/29/2006	8:33	pump	216445.9	7.5	110.2	7.8	21.4	444.0	2.55	461.7	87.6
9/29/2006	8:43	pump	216458.1	12.2	122.4	7.8	21.5	442.0	3.12	461.7	94.3
9/29/2006	8:53	pump	216470.1	12	134.4	7.8	21.5	441.0	3.21	461.7	93.8
9/29/2006	9:03	pump	216482.1	12	146.4	7.8	21.7	442.0	2.91	461.7	95.4

WELL DEVELOPMENT (Continued)

Site/Screen Name: **R-12 Upper** Project No.: **73885.4.2**

Location: **Sandia Canyon** Document Originator: **Steven W. Baur**

DEVELOPMENT TOOLS

Tool:	Description:	Used From	to
Pump	Grundfos 1 hp 5 gpm	9/29/2006	9/29/2006

WELL DEVELOPMENT DATA (Continued)

Date	Time	Tool	Totalizer Reading	Volume Withdrawn (gal.)	Cumulative Volume Withdrawn (gal.)	pH	Temp (°C)	SC (µS/cm)	Turbidity (NTU)	Pump Intake (ft. bgs.)	Comments
9/29/2006	9:13	pump	N/A	N/A	N/A	7.9	21.9	445.0	2.18	461.7	95.7
9/29/2006	9:18	pump	216506.2	24.1	170.5	7.9	21.9	445.0	1.87	461.7	95.6
9/29/2006	9:28	pump	N/A	N/A	N/A	7.9	21.9	445.0	2.25	461.7	95.5
9/29/2006	9:48	pump	216530.6	24.4	194.9	7.9	22.2	439.0	2.15	461.7	105.9
9/29/2006	9:58	pump	216554.4	23.8	218.7	7.9	22.1	438.0	1.85	461.7	109.9
9/29/2006	10:08	pump	N/A	N/A	N/A	7.9	22.3	436.0	2.06	461.7	111
9/29/2006	10:18	pump	216578.3	23.9	242.6	7.9	22.3	440.0	2.06	461.7	114.3
9/29/2006	10:33	pump	N/A	N/A	N/A	7.9	22.4	437.0	2.02	461.7	120.3
9/29/2006	10:48	pump	216602.5	24.2	266.8	7.9	22.5	435.0	2.12	461.7	115.6
9/29/2006	11:03	pump	216626.1	23.6	290.4	7.9	22.6	434.0	2.04	461.7	117
9/29/2006	11:18	pump	216650	23.9	314.3	7.9	22.5	436.0	1.98	461.7	120.9
9/29/2006	11:33	pump	N/A	N/A	N/A	7.9	22.6	437.0	1.87	461.7	130.5

WELL DEVELOPMENT (Continued)

Site/Screen Name: **R-12 Upper** Project No.: **73885.4.2**

Location: **Sandia Canyon** Document Originator: **Steven W. Baur**

DEVELOPMENT TOOLS

Tool:	Pump	**Description:**	Grundos 1 hp 5 gpm	**Used From**	9/29/2006	**to**	9/29/2006
Tool:		**Description:**		**Used From**		**to**	
Tool:		**Description:**		**Used From**		**to**	
Tool:		**Description:**		**Used From**		**to**	

WELL DEVELOPMENT DATA (Continued)

Date	Time	Tool	Totalizer Reading	Volume Withdrawn (gal.)	Cumulative Volume Withdrawn (gal.)	pH	Temp (°C)	SC (µS/cm)	Turbidity (NTU)	Pump Intake (ft. bgs.)	Comments
9/29/2006	11:48	pump	216673.55	23.55	337.85	7.9	22.7	437.0	1.73	461.7	135.4
9/29/2006	12:03	pump	216696.9	23.35	361.2	7.9	22.4	437.0	2.07	461.7	122.8
9/29/2006	12:18	pump	216720.2	23.3	384.5	7.9	22.5	439.0	1.95	461.7	118.1
9/29/2006	12:33	pump	N/A	N/A	N/A	7.9	22.5	437.0	2.27	461.7	125.4
9/29/2006	12:48	pump	216743.3	23.1	407.6	7.9	22.5	437.0	2.04	461.7	120.3
9/29/2006	13:03	pump	216766.6	23.3	430.9	7.9	22.5	436.0	1.92	461.7	120.8
9/29/2006	13:18	pump	216789.9	23.3	454.2	7.8	22.5	436.0	1.89	461.7	122.6
9/29/2006	13:33	pump	N/A	N/A	N/A	7.9	22.5	437.0	2.18	461.7	121.6
9/29/2006	13:48	pump	216813.35	23.45	477.65	7.9	22.6	437.0	2.07	461.7	121.3
9/29/2006	14:03	pump	216836.6	23.25	500.9	7.9	22.5	436.0	1.81	461.7	131.2
9/29/2006	14:18	pump	216860.05	23.45	524.35	7.9	22.6	437.0	1.84	461.7	123.9
9/29/2006	14:33	pump	N/A	N/A	N/A	7.9	22.6	437.0	1.89	461.7	126.8

WELL DEVELOPMENT (Continued)

Site/Screen Name: **R-12 Upper** Project No.: **73885.4.2**

Location: **Sandia Canyon** Document Originator: **Steven W. Baur**

DEVELOPMENT TOOLS

Tool:	Description:	Used From	to
Pump	Grundfos 1 hp 5 gpm	9/29/2006	9/29/2006

WELL DEVELOPMENT DATA (Continued)

Date	Time	Tool	Totalizer Reading	Volume Withdrawn (gal.)	Cumulative Volume Withdrawn (gal.)	pH	Temp (°C)	SC (µS/cm)	Turbidity (NTU)	Pump Intake (ft. bgs.)	Comments
9/29/2006	14:48	pump	216883.5	23.45	547.8	7.9	22.6	435.0	2.0	461.7	131.9
9/29/2006	15:03	pump	216908	24.5	572.3	7.9	22.6	434.0	1.74	461.7	123.4
9/29/2006	15:18	pump	216929.8	21.8	594.1	7.9	22.5	436.0	2.04	461.7	114
9/29/2006	15:33	pump	N/A	N/A	N/A	7.9	22.8	436.0	2.58	461.7	132.4
9/29/2006	15:48	pump	216952.5	22.7	616.8	7.9	22.9	436.0	1.92	461.7	131.4
9/29/2006	16:03	pump	216975.6	23.1	639.9	7.9	22.8	436.0	2.06	461.7	123.9
9/29/2006	16:18	pump	216998.6	23	662.9	7.9	22.7	437.0	1.68	461.7	124.8
9/29/2006	16:33	pump	N/A	N/A	N/A	7.9	22.7	438.0	1.11	461.7	132
9/29/2006	16:48	pump	217021.6	23	685.9	7.9	22.7	435.0	1.63	461.7	129.3
9/29/2006	17:03	pump	217044.5	22.9	708.8	7.9	22.7	435.0	1.78	461.7	128.7
9/29/2006	17:18	pump	217067.45	22.95	731.75	7.9	22.7	438.0	1.67	461.7	129.5
9/29/2006	17:40	pump	217090.9	23.45	755.2	7.9	22.4	435.0	1.78	461.7	134

WELL DEVELOPMENT (Cover Page)

Site/Screen Name: **R-12 Middle**
Location: **Sandia Canyon**
Lead Company: **Kleinfelder Inc.**
Supporting Company: **WDC/DS&A**

Project No.: **73885**
Document Originator: **Steven W. Baur**
Document Reviewer: **B. Lucero**
Review Complete: **10/21/2006**

FINAL WELL DEVELOPMENT PARAMETERS

Well Total Depth: 869 **ft bgs** **Screened Interval:** 504.5 **ft bgs** **to** 508 **ft bgs**

Total Volume Withdrawn (Bailing): None **gals.** **Total Volume Withdrawn (Pumping):** 2376.1 **gals.**

DEVELOPMENT TOOLS

Tool: Pump **Description:** Grundfos 1 hp **Used From** 10/1/2006 **to** 10/1/2006
Tool: **Description:** **Used From** **to**
Tool: **Description:** **Used From** **to**
Tool: **Description:** **Used From** **to**

WELL DEVELOPMENT DATA

Date	Time	Tool	Totalizer Reading	Volume Withdrawn (gal.)	Cumulative Volume Withdrawn (gal.)	pH	Temp (°C)	SC (µS/cm)	Turbidity (NTU)	Pump Intake (ft. bgs.)	Comments
10/1/2006	7:20	pump	217299.7	0	0	N/A	N/A	N/A	N/A	503.8	ORP/mv
10/1/2006	7:27	pump	217320.7	21	21	8.5	14.5	N/A	N/A	503.8	N/A
10/1/2006	7:28	pump	217324	3.3	24.3	8.4	16.8	159.6	12.5	503.8	171
10/1/2006	7:33	pump	217337.1	13.1	37.4	8.3	18	168.5	2	503.8	174
10/1/2006	7:38	pump	217356.9	19.8	57.2	8.3	18.8	168.7	1.35	503.8	177.3
10/1/2006	7:43	pump	217363.5	6.6	63.8	8.3	19.4	168	2.28	503.8	184.4
10/1/2006	7:48	pump	217379.9	16.4	80.2	8.2	19.6	166.5	2.28	503.8	182.3

WELL DEVELOPMENT (Continued)

Site/Screen Name: **R-12 Middle** Project No.: **73885**

Location: **Sandia Canyon** Document Originator: **Steven W. Baur**

DEVELOPMENT TOOLS

Tool:	Pump	**Description:**	Grundfos 1 hp	**Used From**	10/1/2006	**to**	10/1/2006
Tool:		**Description:**		**Used From**		**to**	
Tool:		**Description:**		**Used From**		**to**	
Tool:		**Description:**		**Used From**		**to**	

WELL DEVELOPMENT DATA (Continued)

Date	Time	Tool	Totalizer Reading	Volume Withdrawn (gal.)	Cumulative Volume Withdrawn (gal.)	pH	Temp (°C)	SC (µS/cm)	Turbidity (NTU)	Pump Intake (ft. bgs.)	Comments
10/1/2006	7:53	pump	217396.3	16.4	96.6	8.2	19.6	166.1	1.09	503.8	190.2
10/1/2006	7:58	pump	217429	32.7	129.3	8.2	19.7	166.1	1.18	503.8	189.1
10/1/2006	8:03	pump	217461.8	32.8	162.1	8.2	19.9	165.6	1.42	503.8	194.9
10/1/2006	8:08	pump	N/A	N/A	N/A	8.2	20.2	165.3	2.16	503.8	192.2
10/1/2006	8:13	pump	N/A	N/A	N/A	8.2	20.3	164.9	1.07	503.8	196
10/1/2006	8:18	pump	N/A	N/A	N/A	8.2	20.4	164.9	0.80	503.8	191.7
10/1/2006	8:23	pump	217494.6	32.8	194.9	8.2	20.5	164.3	0.73	503.8	197.7
10/1/2006	8:28	pump	N/A	N/A	N/A	8.2	20.5	163.7	0.73	503.8	197.4
10/1/2006	8:38	pump	217560.5	65.9	260.8	8.2	20.8	165.7	0.73	503.8	194.4
10/1/2006	8:48	pump	N/A	N/A	N/A	8.2	20.6	166.9	0.47	503.8	198.4
10/1/2006	8:58	pump	217626.5	66	326.8	8.1	20.6	166.9	0.54	503.8	191.7
10/1/2006	9:08	pump	N/A	N/A	N/A	8.1	20.7	165.4	0.58	503.8	201.3

WELL DEVELOPMENT (Continued)

Site/Screen Name: **R-12 Middle** Project No.: **73885**

Location: **Sandia Canyon** Document Originator: **Steven W. Baur**

DEVELOPMENT TOOLS

Tool:	Pump	**Description:**	Grundfos 1 hp	**Used From**	10/1/2006	**to**	10/1/2006
Tool:		**Description:**		**Used From**		**to**	
Tool:		**Description:**		**Used From**		**to**	
Tool:		**Description:**		**Used From**		**to**	

WELL DEVELOPMENT DATA (Continued)

Date	Time	Tool	Totalizer Reading	Volume Withdrawn (gal.)	Cumulative Volume Withdrawn (gal.)	pH	Temp (°C)	SC (µS/cm)	Turbidity (NTU)	Pump Intake (ft. bgs.)	Comments
10/1/2006	9:18	pump	217693	66.5	393.3	8.1	20.8	165.2	0.62	503.8	194.6
10/1/2006	9:28	pump	N/A	N/A	N/A	8.1	20.7	164.8	0.48	503.8	194.6
10/1/2006	9:38	pump	217759	66	459.3	8.1	20.7	164.8	0.43	503.8	200.1
10/1/2006	9:48	pump	N/A	N/A	N/A	8.1	20.6	164.7	0.48	503.8	198.1
10/1/2006	9:58	pump	217824.6	65.6	524.9	8.1	20.7	162.8	0.41	503.8	198.2
10/1/2006	10:08	pump	N/A	N/A	N/A	8.1	20.7	161.8	0.48	503.8	199.8
10/1/2006	10:18	pump	217890.9	66.3	591.2	8.1	20.7	165.7	0.41	503.8	199.9
10/1/2006	10:28	pump	N/A	N/A	N/A	8.1	20.7	164.8	0.47	503.8	198.5
10/1/2006	10:45	pump	217956.9	66	657.2	8.1	20.7	164.4	0.35	503.8	195.5
10/1/2006	11:00	pump	218022.9	66	723.2	8.1	20.8	165.7	0.32	503.8	196
10/1/2006	11:30	pump	218089.1	66.2	789.4	8.1	20.7	165.0	0.54	503.8	198.8
10/1/2006	11:45	pump	218164.9	75.8	865.2	8.1	20.7	165.1	0.55	503.8	195.8

WELL DEVELOPMENT (Continued)

Site/Screen Name: **R-12 Middle** Project No.: **73885**

Location: **Sandia Canyon** Document Originator: **Steven W. Baur**

DEVELOPMENT TOOLS

Tool:	Description:	Used From	to
Pump	Grundfos 1 hp	10/1/2006	10/1/2006

WELL DEVELOPMENT DATA (Continued)

Date	Time	Tool	Totalizer Reading	Volume Withdrawn (gal.)	Cumulative Volume Withdrawn (gal.)	pH	Temp (°C)	SC (µS/cm)	Turbidity (NTU)	Pump Intake (ft. bgs.)	Comments
10/1/2006	12:00	pump	218221.05	56.15	921.35	8.1	20.7	164.8	0.7	503.8	194.4
10/1/2006	12:15	pump	218287	65.95	987.3	8.1	20.8	164.0	0.5	503.8	196.5
10/1/2006	12:30	pump	N/A	N/A	N/A	8.1	21.2	164.6	0.3	503.8	213.2
10/1/2006	12:45	pump	218353.2	66.2	1053.5	8.1	20.9	164.7	0.5	503.8	199.8
10/1/2006	13:00	pump	218419.6	66.4	1119.9	8.1	20.9	165.0	0.3	503.8	198.9
10/1/2006	13:15	pump	218485.8	66.2	1186.1	8.1	20.9	163.2	0.3	503.8	202
10/1/2006	13:30	pump	N/A	N/A	N/A	8.1	20.9	164.7	0.4	503.8	199
10/1/2006	13:45	pump	218552.1	66.3	1252.4	8.1	20.9	164.6	0.3	503.8	200.6
10/1/2006	14:00	pump	218618.2	66.1	1318.5	8.1	20.8	164.7	0.42	503.8	201.6
10/1/2006	14:15	pump	218684.4	66.2	1384.7	8.1	20.9	162.6	0.69	503.8	206.3
10/1/2006	14:30	pump	N/A	N/A	N/A	8.1	20.9	163.7	0.66	503.8	206.1
10/1/2006	14:45	pump	218753.7	69.3	1454	8.1	20.9	163.4	0.54	503.8	202.3

WELL DEVELOPMENT (Continued)

Site/Screen Name: **R-12 Middle** Project No.: **73885**

Location: **Sandia Canyon** Document Originator: **Steven W. Baur**

DEVELOPMENT TOOLS

Tool:	Description:	Used From	to
Pump	Grundfos 1 hp	10/1/2006	10/1/2006

WELL DEVELOPMENT DATA (Continued)

Date	Time	Tool	Totalizer Reading	Volume Withdrawn (gal.)	Cumulative Volume Withdrawn (gal.)	pH	Temp (°C)	SC (µS/cm)	Turbidity (NTU)	Pump Intake (ft. bgs.)	Comments
10/1/2006	15:00	pump	218829.7	76	1530	8.1	20.9	162.7	0.52	503.8	205.4
10/1/2006	15:15	pump	218882.5	52.8	1582.8	8.1	20.9	163.8	0.47	503.8	205
10/1/2006	15:30	pump	N/A	N/A	N/A	8.1	20.9	162.1	0.30	503.8	202.5
10/1/2006	15:45	pump	218948.7	66.2	1649	8.1	21.0	164.6	0.49	503.8	202.3
10/1/2006	16:00	pump	219014.8	66.1	1715.1	8.1	20.9	162.2	0.51	503.8	202.1
10/1/2006	16:15	pump	219081	66.2	1781.3	8.1	20.8	164.4	0.50	503.8	207.5
10/1/2006	16:30	pump	N/A	N/A	N/A	8.1	20.8	163.3	0.33	503.8	206.1
10/1/2006	16:45	pump	219147.2	66.2	1847.5	8.1	20.7	163.5	0.37	503.8	203.8
10/1/2006	17:00	pump	219213.4	66.2	1913.7	8.1	20.7	161.7	0.67	503.8	204.8
10/1/2006	17:15	pump	219279.6	66.2	1979.9	8.1	20.7	163.9	0.51	503.8	204.1
10/1/2006	17:30	pump	N/A	N/A	N/A	8.1	20.7	163.4	0.44	503.8	205
10/1/2006	17:50	pump	219411.85	132.25	2112.15	8.1	20.6	163.2	0.34	503.8	200.1

WELL DEVELOPMENT (Cover Page)

Site/Screen Name: R-12 Lower Screen
Location: Sandia Canyon
Lead Company: Kleinfelder Inc.
Supporting Company: TPMC/DS&A

Project No.: 73885.4.2
Document Originator: Jordan Vaughn
Document Reviewer: C. Goetz
Review Complete: 10/23/2006

FINAL WELL DEVELOPMENT PARAMETERS

Well Total Depth: 869 ft bgs Screened Interval: 801 ft bgs to 839 ft bgs

Total Volume Withdrawn (Bailing): None gals. Total Volume Withdrawn (Pumping): 1447.9 gals.

DEVELOPMENT TOOLS

Tool:	Description:	Used From	to
Pump	Grundfos 2 hp	9/27/2006	9/27/2006

WELL DEVELOPMENT DATA

Date	Time	Tool	Totalizer Reading	Volume Withdrawn (gal.)	Cumulative Volume Withdrawn (gal.)	pH	Temp (°C)	SC (µS/cm)	Turbidity (NTU)	Pump Intake (ft. bgs.)	ORP (mv)
9/27/2006	7:10	pump	214827.5	0	0	N/A	N/A	N/A	N/A	835.1	N/A
9/27/2006	7:27	pump	N/A	N/A	N/A	7.64	18.1	189.8	>1000	835.1	152.0
9/27/2006	7:30	pump	214870.4	42.9	42.9	N/A	N/A	N/A	N/A	N/A	N/A
9/27/2006	7:32	pump	N/A	N/A	N/A	7.70	18.3	188.9	188	835.1	-23.8
9/27/2006	7:37	pump	N/A	N/A	N/A	7.79	18.5	185.6	135	835.1	-37.0
9/27/2006	7:40	pump	214891.3	20.9	63.8	N/A	N/A	N/A	N/A	N/A	N/A
9/27/2006	7:42	pump	N/A	N/A	N/A	7.93	18.8	182.8	45.5	835.1	-31.8
9/27/2006	7:47	pump	N/A	N/A	N/A	8.02	19.0	179.8	38.8	835.1	28.1
9/27/2006	7:50	pump	214911.2	19.9	83.7	N/A	N/A	N/A	N/A	N/A	N/A
9/27/2006	7:52	pump	N/A	N/A	N/A	8.07	19.4	172.4	15.6	835.1	61.2

WELL DEVELOPMENT (Continued)

Site/Screen Name: **R-12 Lower Screen** Project No.: **73885.4.2**

Location: **Sandia Canyon** Document Originator: **Jordan Vaughn**

DEVELOPMENT TOOLS

Tool:	Pump	**Description:**	Grundfos 2 hp	**Used From**	9/27/2006	**to**	9/27/2006
Tool:		**Description:**		**Used From**		**to**	
Tool:		**Description:**		**Used From**		**to**	

WELL DEVELOPMENT DATA (Continued)

Date	Time	Tool	Totalizer Reading	Volume Withdrawn (gal.)	Cumulative Volume Withdrawn (gal.)	pH	Temp (°C)	SC (µS/cm)	Turbidity (NTU)	Pump Intake (ft. bgs.)	ORP (mv)
9/27/2006	7:57	pump	N/A	N/A	N/A	8.09	19.4	169.7	12.7	835.1	62.1
9/27/2006	8:01	pump	214932	20.8	104.5	N/A	N/A	N/A	N/A	N/A	N/A
9/27/2006	8:02	pump	N/A	N/A	N/A	8.09	19.6	168.5	23.7	835.1	74.1
9/27/2006	8:07	pump	N/A	N/A	N/A	8.10	19.8	167.9	7.46	835.1	76.0
9/27/2006	8:10	pump	214948.8	16.8	121.3	N/A	N/A	N/A	N/A	N/A	N/A
9/27/2006	8:12	pump	N/A	N/A	N/A	8.09	19.9	167.3	5.93	835.1	73.8
9/27/2006	8:17	pump	N/A	N/A	N/A	8.09	20.1	166.7	6.14	835.1	58.6
9/27/2006	8:20	pump	214967.5	18.7	140	N/A	N/A	N/A	N/A	N/A	N/A
9/27/2006	8:22	pump	N/A	N/A	N/A	8.09	20.2	166.3	6.09	835.1	85.4
9/27/2006	8:27	pump	N/A	N/A	N/A	8.08	19.9	166.5	5.77	835.1	69.0
9/27/2006	8:31	pump	214988.2	20.7	160.7	N/A	N/A	N/A	N/A	N/A	N/A
9/27/2006	8:32	pump	N/A	N/A	N/A	8.08	19.9	166.2	3.31	835.1	109.0
9/27/2006	8:42	pump	N/A	N/A	N/A	8.08	20.0	165.4	3.03	835.1	128.9
9/27/2006	8:52	pump	N/A	N/A	N/A	8.08	19.9	165.0	3.43	835.1	191.1
9/27/2006	9:00	pump	215042.2	54	214.7	8.08	19.9	165.1	3.45	835.1	190.1
9/27/2006	9:10	pump	N/A	N/A	N/A	8.07	20.0	164.8	2.79	835.1	188.5

WELL DEVELOPMENT (Continued)

Site/Screen Name: **R-12 Lower Screen** Project No.: **73885.4.2**

Location: **Sandia Canyon** Document Originator: **Jordan Vaughn**

DEVELOPMENT TOOLS

Tool: Pump **Description:** Grundfos 2 hp **Used From** 9/27/2006 **to** 9/27/2006

Tool: _____ **Description:** _____ **Used From** _____ **to** _____

WELL DEVELOPMENT DATA (Continued)

Date	Time	Tool	Totalizer Reading	Volume Withdrawn (gal.)	Cumulative Volume Withdrawn (gal.)	pH	Temp (°C)	SC (µS/cm)	Turbidity (NTU)	Pump Intake (ft. bgs.)	ORP (mv)
9/27/2006	9:20	pump	215080.2	N/A	N/A	8.06	20.4	165.1	2.70	835.1	193.6
9/27/2006	9:30	pump	215099.4	N/A	N/A	8.07	20.5	164.9	3.76	835.1	198.7
9/27/2006	9:40	pump	215118.7	N/A	N/A	8.06	20.6	164.7	2.45	835.1	200.9
9/27/2006	9:50	pump	215138.1	N/A	N/A	8.06	20.7	164.4	1.69	835.1	199.7
9/27/2006	10:00	pump	215157.5	N/A	N/A	8.05	20.9	163.9	2.48	835.1	197.2
9/27/2006	10:10	pump	215176.8	N/A	N/A	8.05	20.9	164.2	1.69	835.1	200.1
9/27/2006	10:20	pump	215196.1	N/A	N/A	8.05	20.8	164.0	1.67	835.1	208.9
9/27/2006	10:30	pump	215215.5	N/A	N/A	8.05	20.9	164.2	1.72	835.1	209.8
9/27/2006	10:45	pump	N/A	N/A	N/A	8.04	21.1	163.7	1.48	835.1	206.4
9/27/2006	11:00	pump	215273.7	N/A	N/A	8.04	21.1	163.4	1.43	835.1	206.3
9/27/2006	11:15	pump	N/A	N/A	N/A	8.04	21.3	165.1	1.40	835.1	206.9
9/27/2006	11:30	pump	N/A	N/A	N/A	8.03	21.5	165.1	1.40	835.1	201.8

WELL DEVELOPMENT (Continued)

Site/Screen Name: R-12 Lower Screen
Location: Sandia Canyon
Project No.: 73885.4.2
Document Originator: Jordan Vaughn

DEVELOPMENT TOOLS

Tool:	Description:	Used From	to
Pump	Grundfos 2 hp	9/27/2006	9/27/2006

WELL DEVELOPMENT DATA (Continued)

Date	Time	Tool	Totalizer Reading	Volume Withdrawn (gal.)	Cumulative Volume Withdrawn (gal.)	pH	Temp (°C)	SC (µS/cm)	Turbidity (NTU)	Pump Intake (ft. bgs.)	ORP (mv)
9/27/2006	11:45	pump	N/A	N/A	N/A	8.02	21.5	164.9	3.10	835.1	201.9
9/27/2006	12:00	pump	215392	N/A	N/A	8.01	21.7	165.7	1.12	835.1	203.6
9/27/2006	12:15	pump	N/A	N/A	N/A	8.01	21.8	166.2	1.89	835.1	208.1
9/27/2006	12:30	pump	N/A	N/A	N/A	8.01	21.7	166.1	1.62	835.1	207.0
9/27/2006	12:45	pump	N/A	N/A	N/A	8.01	22.0	165.8	1.61	835.1	205.5
9/27/2006	13:00	pump	215514	N/A	N/A	8.00	22.1	165.0	1.11	835.1	205.1
9/27/2006	13:15	pump	N/A	N/A	N/A	7.99	22.2	167.0	1.13	835.1	208.5
9/27/2006	13:30	pump	N/A	N/A	N/A	7.99	22.5	166.9	1.04	835.1	207.8
9/27/2006	13:45	pump	N/A	N/A	N/A	7.99	22.2	168.2	1.31	835.1	213.0
9/27/2006	14:00	pump	215636.3	N/A	N/A	7.99	21.8	168.0	0.79	835.1	220.8
9/27/2006	14:15	pump	N/A	N/A	N/A	8.00	21.7	167.5	0.87	835.1	224.8
9/27/2006	14:30	pump	N/A	N/A	N/A	8.00	21.6	168.4	0.86	835.1	225.6

WELL DEVELOPMENT (Continued)

Site/Screen Name: R-12 Lower Screen
Project No.: 73885.4.2
Location: Sandia Canyon
Document Originator: Jordan Vaughn

DEVELOPMENT TOOLS

Tool:	Description:	Used From	to
Pump	Grundfos 2 hp	9/27/2006	9/27/2006

WELL DEVELOPMENT DATA (Continued)

Date	Time	Tool	Totalizer Reading	Volume Withdrawn (gal.)	Cumulative Volume Withdrawn (gal.)	pH	Temp (°C)	SC (µS/cm)	Turbidity (NTU)	Pump Intake (ft. bgs.)	ORP (mv)
9/27/2006	14:45	pump	N/A	N/A	N/A	7.99	22.3	167.6	0.88	835.1	224.5
9/27/2006	15:00	pump	215759.2	N/A	N/A	7.98	22.3	167.8	0.89	835.1	226.1
9/27/2006	15:15	pump	N/A	N/A	N/A	7.98	22.8	167.7	2.12	835.1	222.0
9/27/2006	15:30	pump	N/A	N/A	N/A	7.98	22.6	169.3	0.93	835.1	222.8
9/27/2006	15:45	pump	N/A	N/A	N/A	7.97	22.5	169.1	0.88	835.1	224.6
9/27/2006	16:00	pump	215881.9	N/A	N/A	7.97	22.5	168.7	1.37	835.1	225.5
9/27/2006	16:15	pump	N/A	N/A	N/A	7.98	22.5	168.4	1.14	835.1	223.6
9/27/2006	16:30	pump	N/A	N/A	N/A	7.98	22.3	168.0	0.81	835.1	225.8
9/27/2006	16:45	pump	N/A	N/A	N/A	7.98	22.1	169.9	0.69	835.1	223.7
9/27/2006	17:00	pump	216004	N/A	N/A	7.98	21.3	169.1	0.74	835.1	219.9
9/27/2006	17:15	pump	N/A	N/A	N/A	7.98	21.3	168.9	0.41	835.1	219.7
9/27/2006	17:30	pump	N/A	N/A	N/A	7.98	21.3	169.1	0.14	835.1	222.0

WELL DEVELOPMENT (Continued)

Site/Screen Name: **R-12 Lower Screen** Project No.: **73885.4.2**

Location: **Sandia Canyon** Document Originator: **Jordan Vaughn**

DEVELOPMENT TOOLS

Tool:	Description:	Used From	to
Pump	Grundfos 2 hp	9/27/2006	9/27/2006

WELL DEVELOPMENT DATA (Continued)

Date	Time	Tool	Totalizer Reading	Volume Withdrawn (gal.)	Cumulative Volume Withdrawn (gal.)	pH	Temp (°C)	SC (µS/cm)	Turbidity (NTU)	Pump Intake (ft. bgs.)	ORP (mv)
9/27/2006	17:45	pump	N/A	N/A	N/A	7.99	21.2	169.0	0.69	835.1	225.9
9/27/2006	18:00	pump	216127	N/A	N/A	7.99	21.2	170.4	0.77	835.1	228.5
9/27/2006	18:20	pump	N/A	N/A	N/A	N/A	N/A	N/A	N/A	N/A	N/A
9/27/2006	18:40	pump	N/A	N/A	N/A	N/A	N/A	N/A	N/A	N/A	N/A
9/27/2006	19:00	pump	N/A	N/A	N/A	N/A	N/A	N/A	N/A	N/A	N/A
9/27/2006	19:10	pump	216275.4	N/A	1447.9	N/A	N/A	N/A	N/A	N/A	Pump Off

KLEINFELDER
An employee owned company

WELL DEVELOPMENT (Cover Page)

Site/Screen Name: R-12 Lower Screen
Location: Sandia Canyon
Lead Company: Kleinfelder Inc.
Supporting Company: TPMC/DS&A

Project No.: 73885.4.2
Document Originator: Jordan Vaughn
Document Reviewer: C. Goetz
Review Complete: 10/21/2006

FINAL WELL DEVELOPMENT PARAMETERS

Well Total Depth: 869 ft bgs Screened Interval: 801 ft bgs to 839 ft bgs

Total Volume Withdrawn (Bailing): None gals. Total Volume Withdrawn (Pumping): 34,497.50 gals.

DEVELOPMENT TOOLS

Tool:	Description:	Used From	to
Pump	Grundfos 7.5 hp	10/16/2006	10/18/2006

WELL DEVELOPMENT DATA

Date	Time	Tool	Totalizer Reading	Volume Withdrawn (gal.)	Cumulative Volume Withdrawn (gal.)	pH	Temp (°C)	SC (µS/cm)	Turbidity (NTU)	Pump Intake (ft. bgs.)	ORP (mv)
10/16/2006	7:40	pump	219338	0	0	N/A	N/A	N/A	N/A	832.94	N/A
10/16/2006	7:46	pump	219348	10	10	N/A	N/A	N/A	N/A	832.94	N/A
10/16/2006	7:47	pump	219366.8	18.8	28.8	7.85	19.1	195.3	97.8	832.94	195.1
10/16/2006	7:48	pump	219386	19.2	48	N/A	N/A	N/A	N/A	832.94	N/A
10/16/2006	7:50	pump	219424.2	38.2	86.2	N/A	N/A	N/A	N/A	832.94	N/A
10/16/2006	7:52	pump	219462	37.8	124	8.01	20.0	199.3	58.9	832.94	200.0
10/16/2006	7:54	pump	219500	38	162	N/A	N/A	N/A	N/A	832.94	N/A

WELL DEVELOPMENT (Continued)

Site/Screen Name: R-12 Lower Screen
Location: Sandia Canyon
Project No.: 73885.4.2
Document Originator: Jordan Vaughn

DEVELOPMENT TOOLS

Tool:	Description:	Used From	to
Pump	Grundfos 7.5 hp	10/16/2006	10/18/2006

WELL DEVELOPMENT DATA (Continued)

Date	Time	Tool	Totalizer Reading	Volume Withdrawn (gal.)	Cumulative Volume Withdrawn (gal.)	pH	Temp (°C)	SC (µS/cm)	Turbidity (NTU)	Pump Intake (ft. bgs.)	ORP (mv)
10/16/2006	7:56	pump	219538	38	200	N/A	N/A	N/A	N/A	832.94	N/A
10/16/2006	7:57	pump	N/A	N/A	N/A	7.93	20.0	204.0	7.79	832.94	201.3
10/16/2006	7:58	pump	219576.2	38.2	238.2	N/A	N/A	N/A	N/A	832.94	N/A
10/16/2006	8:00	pump	219614.2	38	276.2	N/A	N/A	N/A	N/A	832.94	N/A
10/16/2006	8:02	pump	N/A	N/A	N/A	7.92	20.4	205.0	3.96	832.94	191.0
10/16/2006	8:07	pump	N/A	N/A	N/A	7.92	20.5	206.0	4.76	832.94	187.6
10/16/2006	8:10	pump	219804.6	190.4	466.6	N/A	N/A	N/A	N/A	832.94	N/A
10/16/2006	8:12	pump	N/A	N/A	N/A	7.91	20.6	208.0	3.65	832.94	188.4
10/16/2006	8:17	pump	N/A	N/A	N/A	7.90	20.5	208.0	3.52	832.94	187.0
10/16/2006	8:20	pump	219994.8	190.2	656.8	N/A	N/A	N/A	N/A	832.94	N/A
10/16/2006	8:22	pump	N/A	N/A	N/A	7.90	20.7	208.0	3.09	832.94	187.4
10/16/2006	8:27	pump	N/A	N/A	N/A	7.91	20.6	207.0	1.67	832.94	181.3

WELL DEVELOPMENT (Continued)

Site/Screen Name: R-12 Lower Screen
Project No.: 73885.4.2
Location: Sandia Canyon
Document Originator: Jordan Vaughn

DEVELOPMENT TOOLS

Tool:	Description:	Used From	to
Pump	Grundfos 7.5 hp	10/16/2006	10/18/2006

WELL DEVELOPMENT DATA (Continued)

Date	Time	Tool	Totalizer Reading	Volume Withdrawn (gal.)	Cumulative Volume Withdrawn (gal.)	pH	Temp (°C)	SC (µS/cm)	Turbidity (NTU)	Pump Intake (ft. bgs.)	ORP (mv)
10/16/2006	8:32	pump	N/A	N/A	N/A	7.90	20.7	206.0	3.54	832.94	182.1
10/16/2006	8:37	pump	N/A	N/A	N/A	7.90	20.7	208.0	1.67	832.94	180.0
10/16/2006	8:40	pump	220376.2	381.4	1038.2	N/A	N/A	N/A	N/A	832.94	N/A
10/16/2006	8:42	pump	N/A	N/A	N/A	7.90	20.9	207.0	1.72	832.94	182.2
10/16/2006	8:47	pump	N/A	N/A	N/A	7.90	20.9	207.0	1.71	832.94	175.1
10/16/2006	8:57	pump	N/A	N/A	N/A	7.90	21.0	207.0	1.54	832.94	170.5
10/16/2006	9:00	pump	220759	382.8	1421	N/A	N/A	N/A	N/A	832.94	N/A
10/16/2006	9:07	pump	N/A	N/A	N/A	7.90	21.2	209.0	1.82	832.94	177.4
10/16/2006	9:20	pump	221140.5	381.5	1802.5	7.89	21.3	209.0	1.9	832.94	176.3
10/16/2006	9:30	pump	N/A	N/A	N/A	7.90	21.4	210.0	2.91	832.94	180.7
10/16/2006	9:40	pump	221523.3	382.8	2185.3	7.89	21.4	209.0	1.77	832.94	179.6
10/16/2006	9:50	pump	N/A	N/A	N/A	7.89	21.4	209.0	1.35	832.94	182.7

WELL DEVELOPMENT (Continued)

Site/Screen Name: R-12 Lower Screen
Location: Sandia Canyon
Project No.: 73885.4.2
Document Originator: Jordan Vaughn

DEVELOPMENT TOOLS

Tool:	Description:	Used From	to
Pump	Grundfos 7.5 hp	10/16/2006	10/18/2006

WELL DEVELOPMENT DATA (Continued)

Date	Time	Tool	Totalizer Reading	Volume Withdrawn (gal.)	Cumulative Volume Withdrawn (gal.)	pH	Temp (°C)	SC (µS/cm)	Turbidity (NTU)	Pump Intake (ft. bgs.)	ORP (mv)
10/16/2006	10:00	pump	221906	382.7	2568	7.89	21.5	210.0	1.34	832.94	182.6
10/16/2006	10:10	pump	N/A	N/A	N/A	7.91	21.5	210.0	1.19	832.94	190.7
10/16/2006	10:20	pump	222289	383	2951	8.41	21.1	209.0	1.07	832.94	188.6
10/16/2006	10:30	pump	N/A	N/A	N/A	8.61	20.9	210.0	1.35	832.94	190.9
10/16/2006	10:40	pump	N/A	N/A	N/A	8.51	21.0	209.0	1.05	832.94	185.7
10/16/2006	10:46	pump	222786.2	497.2	3448.2	N/A	N/A	N/A	N/A	832.94	N/A
10/16/2006	10:50	pump	N/A	N/A	N/A	8.28	21.0	211.0	1.08	832.94	191.8
10/16/2006	11:00	pump	223055	268.8	3717	8.04	21.1	210.0	1.22	832.94	184.3
10/16/2006	11:10	pump	N/A	N/A	N/A	7.99	21.2	211.0	1.19	832.94	185.5
10/16/2006	11:20	pump	223435.6	380.6	4097.6	8.08	21.2	212.0	1.02	832.94	180.0
10/16/2006	11:30	pump	N/A	N/A	N/A	8.11	21.3	211.0	1.96	832.94	174.3
10/16/2006	11:40	pump	223818.5	382.9	4480.5	8.30	21.4	211.0	1.41	832.94	185.4
10/16/2006	11:50	pump	N/A	N/A	N/A	8.60	21.5	211.0	1.25	832.94	186.9

WELL DEVELOPMENT (Continued)

Site/Screen Name: R-12 Lower Screen
Project No.: 73885.4.2
Location: Sandia Canyon
Document Originator: Jordan Vaughn

DEVELOPMENT TOOLS

Tool:	Description:	Used From	to
Pump	Grundfos 7.5 hp	10/16/2006	10/18/2006

WELL DEVELOPMENT DATA (Continued)

Date	Time	Tool	Totalizer Reading	Volume Withdrawn (gal.)	Cumulative Volume Withdrawn (gal.)	pH	Temp (°C)	SC (µS/cm)	Turbidity (NTU)	Pump Intake (ft. bgs.)	ORP (mv)
10/16/2006	12:00	pump	224201.5	383	4863.5	nm	21.8	212.0	1.2	832.94	187.4
10/16/2006	12:10	pump	N/A	N/A	N/A	nm	21.8	213.0	1.9	832.94	193.2
10/16/2006	12:20	pump	224584.5	383	5246.5	nm	21.9	212.0	.95	832.94	191.6
10/16/2006	12:30	pump	N/A	N/A	N/A	nm	22.0	212.0	.62	832.94	191.1
10/16/2006	12:40	pump	224968.2	383.7	5630.2	7.67	21.9	212.0	1.21	832.94	195.9
10/16/2006	12:50	pump	N/A	N/A	N/A	7.77	21.9	213.0	.64	832.94	198.8
10/16/2006	13:00	pump	225352.7	384.5	6014.7	7.78	22.0	213.0	.78	832.94	207.0
10/16/2006	13:15	pump	N/A	N/A	N/A	7.80	22.0	214.0	.74	832.94	212.7
10/16/2006	13:20	pump	225737	384.3	6399	N/A	N/A	N/A	N/A	N/A	N/A
10/16/2006	13:30	pump	N/A	N/A	N/A	7.81	21.9	213.0	.81	832.94	215.3
10/16/2006	13:40	pump	226121.2	384.2	6783.2	N/A	N/A	N/A	N/A	N/A	N/A
10/16/2006	13:45	pump	N/A	N/A	N/A	7.78	21.7	214.0	.68	832.94	213.5
10/16/2006	14:00	pump	226505.6	384.4	7167.6	7.82	22.3	213.0	.72	832.94	215.2

WELL DEVELOPMENT (Continued)

Site/Screen Name: R-12 Lower Screen
Location: Sandia Canyon
Project No.: 73885.4.2
Document Originator: Jordan Vaughn

DEVELOPMENT TOOLS

Tool:	Description:	Used From	to
Pump	Grundfos 7.5 hp	10/16/2006	10/18/2006

WELL DEVELOPMENT DATA (Continued)

Date	Time	Tool	Totalizer Reading	Volume Withdrawn (gal.)	Cumulative Volume Withdrawn (gal.)	pH	Temp (°C)	SC (µS/cm)	Turbidity (NTU)	Pump Intake (ft. bgs.)	ORP (mv)
10/16/2006	14:15	pump	N/A	N/A	N/A	7.85	22.0	213.0	.61	832.94	213.4
10/16/2006	14:20	pump	226889	383.4	7551	N/A	N/A	N/A	N/A	N/A	N/A
10/16/2006	14:30	pump	N/A	N/A	N/A	7.86	22.0	212.0	2.9	832.94	217.7
10/16/2006	14:40	pump	227273.5	384.5	7935.5	N/A	N/A	N/A	N/A	832.94	N/A
10/16/2006	14:45	pump	N/A	N/A	N/A	7.86	22.0	212.0	1.09	832.94	217.3
10/16/2006	15:00	pump	227658.5	385	8320.5	7.87	22.4	213.0	.77	832.94	217.4
10/16/2006	15:15	pump	N/A	N/A	N/A	7.89	21.8	214.0	.68	832.94	222
10/16/2006	15:20	pump	228042.5	384	8704.5	N/A	N/A	N/A	N/A	832.94	N/A
10/16/2006	15:30	pump	N/A	N/A	N/A	7.89	21.8	213.0	.77	832.94	219.7
10/16/2006	15:40	pump	228428	385.5	9090	N/A	N/A	N/A	N/A	832.94	N/A
10/16/2006	15:45	pump	N/A	N/A	N/A	7.89	21.6	213.0	.61	832.94	222.4
10/16/2006	16:00	pump	228811.6	383.6	9473.6	7.89	21.6	213.0	.75	832.94	219.9
10/16/2006	16:15	pump	N/A	N/A	N/A	7.90	21.6	213.0	.58	832.94	220.8

WELL DEVELOPMENT (Continued)

Site/Screen Name: R-12 Lower Screen
Location: Sandia Canyon
Project No.: 73885.4.2
Document Originator: Jordan Vaughn

DEVELOPMENT TOOLS

Tool:	Description:	Used From	to
Pump	Grundfos 7.5 hp	10/16/2006	10/18/2006

WELL DEVELOPMENT DATA (Continued)

Date	Time	Tool	Totalizer Reading	Volume Withdrawn (gal.)	Cumulative Volume Withdrawn (gal.)	pH	Temp (°C)	SC (µS/cm)	Turbidity (NTU)	Pump Intake (ft. bgs.)	ORP (mv)
10/16/2006	16:20	pump	229196	384.4	9858	N/A	N/A	N/A	N/A	832.94	N/A
10/16/2006	16:30	pump	N/A	N/A	N/A	7.90	21.6	214.0	.59	832.94	221.4
10/16/2006	16:40	pump	229579	383	10241	N/A	N/A	N/A	N/A	832.94	N/A
10/16/2006	16:45	pump	N/A	N/A	N/A	7.90	21.6	214.0	.54	832.94	223.3
10/16/2006	16:50	pump	229770	191	10432	N/A	N/A	N/A	N/A	832.94	N/A
10/16/2006	17:00	pump	229962.5	192.5	10624.5	7.91	21.6	214.0	.48	832.94	224.7
10/16/2006	17:15	pump	N/A	N/A	N/A	7.91	21.7	213.0	0.41	832.94	226.5
10/16/2006	17:20	pump	230346	383.5	11008	N/A	N/A	N/A	N/A	832.94	N/A
10/16/2006	18:00	pump	230730.8	384.8	11392.8	N/A	N/A	N/A	N/A	832.94	N/A
10/17/2006	7:15	pump	230730.8	0	11392.8	N/A	N/A	N/A	N/A	832.94	N/A
10/17/2006	7:16	pump	230748.8	18	11410.8	N/A	N/A	N/A	N/A	832.94	N/A
10/17/2006	7:17	pump	230767.2	18.4	11429.2	N/A	N/A	N/A	N/A	832.94	N/A
10/17/2006	7:20	pump	230824	56.8	11486	N/A	N/A	N/A	N/A	832.94	N/A

WELL DEVELOPMENT (Continued)

Site/Screen Name: R-12 Lower Screen
Location: Sandia Canyon
Project No.: 73885.4.2
Document Originator: Jordan Vaughn

DEVELOPMENT TOOLS

Tool:	Description:	Used From	to
Pump	Grundfos 7.5 hp	10/16/2006	10/18/2006

WELL DEVELOPMENT DATA (Continued)

Date	Time	Tool	Totalizer Reading	Volume Withdrawn (gal.)	Cumulative Volume Withdrawn (gal.)	pH	Temp (°C)	SC (µS/cm)	Turbidity (NTU)	Pump Intake (ft. bgs.)	ORP (mv)
10/17/2006	7:21	pump	N/A	N/A	N/A	7.52	16.0	229.0	30.9	832.94	121.7
10/17/2006	7:26	pump	N/A	N/A	N/A	7.76	19.6	228.0	18.4	832.94	137.1
10/17/2006	7:30	pump	231014.6	190.6	11676.6	N/A	N/A	N/A	N/A	832.94	N/A
10/17/2006	7:31	pump	N/A	N/A	N/A	7.83	19.8	229.0	4.06	832.94	145.3
10/17/2006	7:36	pump	N/A	N/A	N/A	7.90	20.2	228.0	3.12	832.94	156.6
10/17/2006	7:40	pump	231206	191.4	11868	N/A	N/A	N/A	N/A	832.94	N/A
10/17/2006	7:41	pump	N/A	N/A	N/A	7.92	20.3	227.0	2.08	832.94	153.9
10/17/2006	7:46	pump	N/A	N/A	N/A	7.93	20.4	227.0	1.96	832.94	156.4
10/17/2006	7:51	pump	N/A	N/A	N/A	7.94	20.5	228.0	1.85	832.94	161.3
10/17/2006	7:56	pump	N/A	N/A	N/A	7.94	20.6	228.0	1.38	832.94	159.3
10/17/2006	8:00	pump	231589.3	383.3	12251.3	N/A	N/A	N/A	N/A	832.94	N/A
10/17/2006	8:01	pump	N/A	N/A	N/A	7.94	20.8	227.0	1.6	832.94	169.4

WELL DEVELOPMENT (Continued)

Site/Screen Name: R-12 Lower Screen
Location: Sandia Canyon
Project No.: 73885.4.2
Document Originator: Jordan Vaughn

DEVELOPMENT TOOLS

Tool:	Description:	Used From	to
Pump	Grundfos 7.5 hp	10/16/2006	10/18/2006

WELL DEVELOPMENT DATA (Continued)

Date	Time	Tool	Totalizer Reading	Volume Withdrawn (gal.)	Cumulative Volume Withdrawn (gal.)	pH	Temp (°C)	SC (µS/cm)	Turbidity (NTU)	Pump Intake (ft. bgs.)	ORP (mv)
10/17/2006	8:06	pump	N/A	N/A	N/A	7.95	20.9	227.0	1.66	832.94	173.1
10/17/2006	8:11	pump	N/A	N/A	N/A	7.95	21.0	227.0	1.48	832.94	169.5
10/17/2006	8:16	pump	N/A	N/A	N/A	7.95	21.0	227.0	1.16	832.94	176
10/17/2006	8:20	pump	231973.5	384.2	12635.5	N/A	N/A	N/A	N/A	832.94	N/A
10/17/2006	8:21	pump	N/A	N/A	N/A	7.95	21.1	228.0	1.38	832.94	174.9
10/17/2006	8:30	pump	N/A	N/A	N/A	7.95	21.5	226.0	1.34	832.94	184.5
10/17/2006	8:40	pump	232356.3	382.8	13018.3	7.94	21.2	226.0	.93	832.94	186.1
10/17/2006	8:50	pump	N/A	N/A	N/A	7.94	21.2	226.0	.83	832.94	190
10/17/2006	9:00	pump	232739.8	383.5	13401.8	7.94	21.3	227.0	.82	832.94	190.6
10/17/2006	9:10	pump	N/A	N/A	N/A	7.94	21.4	226.0	.75	832.94	192.1
10/17/2006	9:20	pump	233118.9	379.1	13780.9	7.94	21.5	226.0	.91	832.94	196.6
10/17/2006	9:30	pump	N/A	N/A	N/A	7.93	21.5	226.0	.87	832.94	198.3

WELL DEVELOPMENT (Continued)

Site/Screen Name: R-12 Lower Screen
Location: Sandia Canyon
Project No.: 73885.4.2
Document Originator: Jordan Vaughn

DEVELOPMENT TOOLS

Tool:	Description:	Used From	to
Pump	Grundfos 7.5 hp	10/16/2006	10/18/2006

WELL DEVELOPMENT DATA (Continued)

Date	Time	Tool	Totalizer Reading	Volume Withdrawn (gal.)	Cumulative Volume Withdrawn (gal.)	pH	Temp (°C)	SC (µS/cm)	Turbidity (NTU)	Pump Intake (ft. bgs.)	ORP (mv)
10/17/2006	9:40	pump	233506.8	387.9	14168.8	7.93	21.5	226.0	.89	832.94	199.8
10/17/2006	9:50	pump	N/A	N/A	N/A	7.94	21.6	226.0	.99	832.94	196.7
10/17/2006	10:00	pump	233890.7	383.9	14552.7	7.93	21.5	227.0	.89	832.94	188
10/17/2006	10:10	pump	N/A	N/A	N/A	7.93	21.4	227.0	0.87	832.94	186.2
10/17/2006	10:20	pump	234081	190.3	14743	7.94	21.6	227.0	9.47	832.94	184.5
10/17/2006	10:30	pump	N/A	N/A	N/A	7.93	21.6	226.0	4.69	832.94	188.0
10/17/2006	10:40	pump	234468.2	387.2	15130.2	7.93	21.7	225.0	2.84	832.94	190.6
10/17/2006	10:50	pump	N/A	N/A	N/A	7.94	21.8	226.0	1.71	832.94	191.7
10/17/2006	11:00	pump	234846.9	378.7	15508.9	7.93	21.8	226.0	1.33	832.94	191.5
10/17/2006	11:15	pump	N/A	N/A	N/A	7.93	21.8	226.0	1.29	832.94	191.3
10/17/2006	11:20	pump	235228.5	381.6	15890.5	N/A	N/A	N/A	N/A	832.94	N/A
10/17/2006	11:30	pump	N/A	N/A	N/A	7.92	21.6	227.0	1.15	832.94	194.8

WELL DEVELOPMENT (Continued)

Site/Screen Name: R-12 Lower Screen
Location: Sandia Canyon
Project No.: 73885.4.2
Document Originator: Jordan Vaughn

DEVELOPMENT TOOLS

Tool:	Description:	Used From	to
Pump	Grundfos 7.5 hp	10/16/2006	10/18/2006

WELL DEVELOPMENT DATA (Continued)

Date	Time	Tool	Totalizer Reading	Volume Withdrawn (gal.)	Cumulative Volume Withdrawn (gal.)	pH	Temp (°C)	SC (µS/cm)	Turbidity (NTU)	Pump Intake (ft. bgs.)	ORP (mv)
10/17/2006	11:40	pump	235611	382.5	16273	N/A	N/A	N/A	N/A	832.94	N/A
10/17/2006	11:45	pump	N/A	N/A	N/A	7.93	21.9	226.0	.87	832.94	198.9
10/17/2006	12:00	pump	235994.8	383.8	16656.8	7.93	22.0	226.0	.99	832.94	203.4
10/17/2006	12:15	pump	N/A	N/A	N/A	7.93	21.7	227.0	0.74	832.94	205.2
10/17/2006	12:20	pump	236378.3	383.5	17040.3	N/A	N/A	N/A	N/A	832.94	N/A
10/17/2006	12:30	pump	N/A	N/A	N/A	7.93	21.9	226.0	.72	832.94	203.5
10/17/2006	12:45	pump	N/A	N/A	N/A	7.93	21.8	227.0	.7	832.94	206.3
10/17/2006	12:47	pump	236896	517.7	17558	N/A	N/A	N/A	N/A	832.94	N/A
10/17/2006	13:00	pump	237145.5	249.5	17807.5	7.92	21.7	227.0	.66	832.94	207.6
10/17/2006	13:15	pump	N/A	N/A	N/A	7.91	22.1	226.0	.87	832.94	211.2
10/17/2006	13:20	pump	237529.3	383.8	18191.3	N/A	N/A	N/A	N/A	832.94	N/A
10/17/2006	13:30	pump	N/A	N/A	N/A	7.94	22.0	226.0	.64	832.94	210.9

WELL DEVELOPMENT (Continued)

Site/Screen Name: R-12 Lower Screen
Location: Sandia Canyon
Project No.: 73885.4.2
Document Originator: Jordan Vaughn

DEVELOPMENT TOOLS

Tool:	Description:	Used From	to
Pump	Grundfos 7.5 hp	10/16/2006	10/18/2006

WELL DEVELOPMENT DATA (Continued)

Date	Time	Tool	Totalizer Reading	Volume Withdrawn (gal.)	Cumulative Volume Withdrawn (gal.)	pH	Temp (°C)	SC (µS/cm)	Turbidity (NTU)	Pump Intake (ft. bgs.)	ORP (mv)
10/17/2006	13:40	pump	237913	383.7	18575	N/A	N/A	N/A	N/A	832.94	N/A
10/17/2006	13:45	pump	N/A	N/A	N/A	7.94	21.7	227.0	.7	832.94	213
10/17/2006	14:00	pump	238296.8	383.8	18958.8	7.93	21.6	225.0	.85	832.94	212.8
10/17/2006	14:15	pump	N/A	N/A	N/A	7.93	21.7	226.0	0.67	832.94	211.6
10/17/2006	14:20	pump	238682	385.2	19344	N/A	N/A	N/A	N/A	832.94	N/A
10/17/2006	14:30	pump	N/A	N/A	N/A	7.93	21.7	226.0	.58	832.94	213.4
10/17/2006	14:40	pump	239067.3	385.3	19729.3	N/A	N/A	N/A	N/A	832.94	N/A
10/17/2006	14:45	pump	N/A	N/A	N/A	7.93	21.6	227.0	.54	832.94	216.5
10/17/2006	15:00	pump	239452.2	384.9	20114.2	7.93	21.7	226.0	.55	832.94	217.4
10/17/2006	15:15	pump	N/A	N/A	N/A	7.94	22.0	227.0	.71	832.94	220.5
10/17/2006	15:20	pump	239838	385.8	20500	N/A	N/A	N/A	N/A	832.94	N/A
10/17/2006	15:30	pump	N/A	N/A	N/A	7.92	21.5	228.0	.64	832.94	219

WELL DEVELOPMENT (Continued)

Site/Screen Name: R-12 Lower Screen
Location: Sandia Canyon
Project No.: 73885.4.2
Document Originator: Jordan Vaughn

DEVELOPMENT TOOLS

Tool:	Description:	Used From	to
Pump	Grundfos 7.5 hp	10/16/2006	10/18/2006

WELL DEVELOPMENT DATA (Continued)

Date	Time	Tool	Totalizer Reading	Volume Withdrawn (gal.)	Cumulative Volume Withdrawn (gal.)	pH	Temp (°C)	SC (µS/cm)	Turbidity (NTU)	Pump Intake (ft. bgs.)	ORP (mv)
10/17/2006	15:40	pump	240223	385	20885	N/A	N/A	N/A	N/A	832.94	N/A
10/17/2006	15:45	pump	N/A	N/A	N/A	7.92	21.2	226.0	.6	832.94	219.2
10/17/2006	16:00	pump	240607	384	21269	7.92	21.3	226.0	.55	832.94	220
10/17/2006	16:15	pump	N/A	N/A	N/A	7.93	21.9	226.0	0.46	832.94	217.9
10/17/2006	16:20	pump	240993	386	21655	N/A	N/A	N/A	N/A	832.94	N/A
10/17/2006	16:30	pump	N/A	N/A	N/A	7.93	21.9	226.0	0.42	832.94	216.0
10/17/2006	16:40	pump	241377	384	22039	N/A	N/A	N/A	N/A	832.94	N/A
10/17/2006	16:45	pump	N/A	N/A	N/A	7.93	22.0	226.0	.55	832.94	218.6
10/17/2006	17:00	pump	241762.4	385.4	22424.4	7.94	21.9	225.0	.58	832.94	221.4
10/17/2006	17:20	pump	242147.5	385.1	22809.5	N/A	N/A	N/A	N/A	832.94	N/A
10/17/2006	17:25	pump	242244.1	96.6	22906.1	N/A	N/A	N/A	N/A	832.94	N/A
10/18/2006	7:10	pump	242244.1	0	22906.1	N/A	N/A	N/A	N/A	832.94	N/A

WELL DEVELOPMENT (Continued)

Site/Screen Name: R-12 Lower Screen
Location: Sandia Canyon
Project No.: 73885.4.2
Document Originator: Jordan Vaughn

DEVELOPMENT TOOLS

Tool:	Description:	Used From	to
Pump	Grundfos 7.5 hp	10/16/2006	10/18/2006

WELL DEVELOPMENT DATA (Continued)

Date	Time	Tool	Totalizer Reading	Volume Withdrawn (gal.)	Cumulative Volume Withdrawn (gal.)	pH	Temp (°C)	SC (µS/cm)	Turbidity (NTU)	Pump Intake (ft. bgs.)	ORP (mv)
10/18/2006	7:11	pump	242262.2	18.1	22924.2	N/A	N/A	N/A	N/A	832.94	N/A
10/18/2006	7:12	pump	242280.8	18.6	22942.8	N/A	N/A	N/A	N/A	832.94	N/A
10/18/2006	7:16	pump	242357.4	76.6	23019.4	7.40	17.8	225.0	40.1	832.94	77.8
10/18/2006	7:20	pump	242434.2	76.8	23096.2	N/A	N/A	N/A	N/A	832.94	N/A
10/18/2006	7:21	pump	N/A	N/A	N/A	7.52	20.5	230.0	5.54	832.94	211.6
10/18/2006	7:26	pump	N/A	N/A	N/A	7.54	20.7	227.0	3.41	832.94	217.1
10/18/2006	7:30	pump	242627	192.8	23289	N/A	N/A	N/A	N/A	832.94	N/A
10/18/2006	7:31	pump	N/A	N/A	N/A	7.62	20.8	228.0	2.26	832.94	216
10/18/2006	7:36	pump	N/A	N/A	N/A	7.72	21.0	230.0	1.16	832.94	214.4
10/18/2006	7:41	pump	N/A	N/A	N/A	7.77	21.1	230.0	.94	832.94	213.5
10/18/2006	7:46	pump	N/A	N/A	N/A	7.81	21.1	229.0	.68	832.94	213.9
10/18/2006	7:50	pump	243011.2	384.2	23673.2	N/A	N/A	N/A	N/A	832.94	N/A

WELL DEVELOPMENT (Continued)

Site/Screen Name: R-12 Lower Screen
Location: Sandia Canyon
Project No.: 73885.4.2
Document Originator: Jordan Vaughn

DEVELOPMENT TOOLS

Tool:	Description:	Used From	to
Pump	Grundfos 7.5 hp	10/16/2006	10/18/2006

WELL DEVELOPMENT DATA (Continued)

Date	Time	Tool	Totalizer Reading	Volume Withdrawn (gal.)	Cumulative Volume Withdrawn (gal.)	pH	Temp (°C)	SC (µS/cm)	Turbidity (NTU)	Pump Intake (ft. bgs.)	ORP (mv)
10/18/2006	7:51	pump	N/A	N/A	N/A	7.83	21.2	230.0	.71	832.94	211.9
10/18/2006	7:56	pump	N/A	N/A	N/A	7.85	21.2	230.0	.35	832.94	213.1
10/18/2006	8:01	pump	N/A	N/A	N/A	7.86	21.3	230.0	.67	832.94	214.2
10/18/2006	8:06	pump	N/A	N/A	N/A	7.87	21.3	230.0	0.75	832.94	215.4
10/18/2006	8:10	pump	243396	384.8	24058	N/A	N/A	N/A	N/A	832.94	N/A
10/18/2006	8:11	pump	N/A	N/A	N/A	7.87	21.4	229.0	0.61	832.94	210.3
10/18/2006	8:16	pump	N/A	N/A	N/A	7.88	21.5	228.0	.44	832.94	209.1
10/18/2006	8:21	pump	N/A	N/A	N/A	7.89	21.5	228.0	.58	832.94	208.1
10/18/2006	8:30	pump	243781.2	385.2	24443.2	7.89	21.7	229.0	.44	832.94	207.4
10/18/2006	8:40	pump	N/A	N/A	N/A	7.90	21.5	228.0	.49	832.94	209
10/18/2006	8:50	pump	244167	385.8	24829	7.90	21.6	229.0	.53	832.94	208.9
10/18/2006	9:00	pump	N/A	N/A	N/A	7.92	20.7	230.0	.51	832.94	207.1

WELL DEVELOPMENT (Continued)

Site/Screen Name: R-12 Lower Screen
Location: Sandia Canyon
Project No.: 73885.4.2
Document Originator: Jordan Vaughn

DEVELOPMENT TOOLS

Tool:	Description:	Used From	to
Pump	Grundfos 7.5 hp	10/16/2006	10/18/2006

WELL DEVELOPMENT DATA (Continued)

Date	Time	Tool	Totalizer Reading	Volume Withdrawn (gal.)	Cumulative Volume Withdrawn (gal.)	pH	Temp (°C)	SC (µS/cm)	Turbidity (NTU)	Pump Intake (ft. bgs.)	ORP (mv)
10/18/2006	9:10	pump	244552.5	385.5	25214.5	7.91	21.7	228.0	.47	832.94	202.8
10/18/2006	9:20	pump	N/A	N/A	N/A	7.92	21.6	228.0	.41	832.94	198.6
10/18/2006	9:30	pump	244938	385.5	25600	7.91	21.6	227.0	.44	832.94	208
10/18/2006	9:40	pump	N/A	N/A	N/A	7.91	21.5	228.0	0.43	832.94	208.1
10/18/2006	9:50	pump	245324	386	25986	7.91	21.6	228.0	0.42	832.94	207.5
10/18/2006	10:00	pump	N/A	N/A	N/A	7.91	21.6	227.0	0.39	832.94	209.4
10/18/2006	10:10	pump	245710.5	386.5	26372.5	7.92	21.7	228.0	.47	832.94	208.6
10/18/2006	10:20	pump	N/A	N/A	N/A	7.92	21.7	229.0	.41	832.94	212.2
10/18/2006	10:30	pump	246096.3	385.8	26758.3	7.91	21.7	228.0	.35	832.94	209.3
10/18/2006	10:45	pump	N/A	N/A	N/A	7.92	21.8	228.0	.44	832.94	205.9
10/18/2006	10:50	pump	246483	386.7	27145	N/A	N/A	N/A	N/A	832.94	N/A
10/18/2006	11:00	pump	N/A	N/A	N/A	7.92	21.8	228.0	.47	832.94	206.6

WELL DEVELOPMENT (Continued)

Site/Screen Name: R-12 Lower Screen
Location: Sandia Canyon
Project No.: 73885.4.2
Document Originator: Jordan Vaughn

DEVELOPMENT TOOLS

Tool:	Description:	Used From	to
Pump	Grundfos 7.5 hp	10/16/2006	10/18/2006

WELL DEVELOPMENT DATA (Continued)

Date	Time	Tool	Totalizer Reading	Volume Withdrawn (gal.)	Cumulative Volume Withdrawn (gal.)	pH	Temp (°C)	SC (µS/cm)	Turbidity (NTU)	Pump Intake (ft. bgs.)	ORP (mv)
10/18/2006	11:10	pump	246869.8	386.8	27531.8	N/A	N/A	N/A	N/A	832.94	N/A
10/18/2006	11:15	pump	N/A	N/A	N/A	7.92	21.8	227.0	.34	832.94	205.6
10/18/2006	11:30	pump	247256.3	386.5	27918.3	7.92	21.9	228.0	.43	832.94	203
10/18/2006	11:45	pump	N/A	N/A	N/A	7.92	22	228.0	0.38	832.94	206.1
10/18/2006	11:50	pump	247643	386.7	28305	N/A	N/A	N/A	N/A	832.94	N/A
10/18/2006	12:00	pump	N/A	N/A	N/A	7.92	22.0	228.0	0.4	832.94	207.3
10/18/2006	12:10	pump	248029.8	386.8	28691.8	N/A	N/A	N/A	N/A	832.94	N/A
10/18/2006	12:15	pump	N/A	N/A	N/A	7.91	21.90	228.0	0.500	832.94	208.2
10/18/2006	12:30	pump	248416	386.2	29078	7.91	22.0	229.0	.36	832.94	209.7
10/18/2006	12:45	pump	N/A	N/A	N/A	7.91	21.8	228.0	.34	832.94	211.6
10/18/2006	12:50	pump	248803	387	29465	N/A	N/A	N/A	N/A	832.94	N/A
10/18/2006	13:00	pump	N/A	N/A	N/A	7.91	21.8	228.0	.39	832.94	213

WELL DEVELOPMENT (Continued)

Site/Screen Name: R-12 Lower Screen
Location: Sandia Canyon
Project No.: 73885.4.2
Document Originator: Jordan Vaughn

DEVELOPMENT TOOLS

Tool:	Description:	Used From	to
Pump	Grundfos 7.5 hp	10/16/2006	10/18/2006

WELL DEVELOPMENT DATA (Continued)

Date	Time	Tool	Totalizer Reading	Volume Withdrawn (gal.)	Cumulative Volume Withdrawn (gal.)	pH	Temp (°C)	SC (µS/cm)	Turbidity (NTU)	Pump Intake (ft. bgs.)	ORP (mv)
10/18/2006	13:10	pump	249189.8	386.8	29851.8	N/A	N/A	N/A	N/A	832.94	N/A
10/18/2006	13:15	pump	N/A	N/A	N/A	7.91	21.7	228.0	.38	832.94	215.5
10/18/2006	13:30	pump	249576.8	387	30238.8	7.92	21.8	227.0	.45	832.94	213.1
10/18/2006	13:45	pump	N/A	N/A	N/A	7.91	22	228.0	0.29	832.94	212.1
10/18/2006	13:50	pump	249969.9	393.1	30631.9	N/A	N/A	N/A	N/A	832.94	N/A
10/18/2006	14:00	pump	N/A	N/A	N/A	7.91	22.1	228.0	0.36	832.94	215.5
10/18/2006	14:10	pump	250351	381.1	31013	N/A	N/A	N/A	N/A	832.94	N/A
10/18/2006	14:15	pump	N/A	N/A	N/A	7.91	22.10	228.0	0.300	832.94	213.3
10/18/2006	14:30	pump	250738	387	31400	7.92	21.9	229.0	.29	832.94	214.6
10/18/2006	14:45	pump	N/A	N/A	N/A	7.91	22.1	228.0	.34	832.94	225.6
10/18/2006	14:50	pump	251125	387	31787	N/A	N/A	N/A	N/A	832.94	N/A
10/18/2006	15:00	pump	N/A	N/A	N/A	7.92	22.1	228.0	.35	832.94	226.9

WELL DEVELOPMENT (Continued)

Site/Screen Name: R-12 Lower Screen
Location: Sandia Canyon
Project No.: 73885.4.2
Document Originator: Jordan Vaughn

DEVELOPMENT TOOLS

Tool:	Description:	Used From	to
Pump	Grundfos 7.5 hp	10/16/2006	10/18/2006

WELL DEVELOPMENT DATA (Continued)

Date	Time	Tool	Totalizer Reading	Volume Withdrawn (gal.)	Cumulative Volume Withdrawn (gal.)	pH	Temp (°C)	SC (µS/cm)	Turbidity (NTU)	Pump Intake (ft. bgs.)	ORP (mv)
10/18/2006	15:10	pump	251511.4	386.4	32173.4	N/A	N/A	N/A	N/A	832.94	N/A
10/18/2006	15:15	pump	N/A	N/A	N/A	7.92	21.9	227.0	.34	832.94	228.6
10/18/2006	15:30	pump	251898.2	386.8	32560.2	N/A	N/A	N/A	N/A	832.94	N/A
10/18/2006	15:50	pump	252285.5	387.3	32947.5	N/A	N/A	N/A	N/A	832.94	N/A
10/18/2006	16:10	pump	252672.8	387.3	33334.8	N/A	N/A	N/A	N/A	832.94	N/A
10/18/2006	16:30	pump	253060	387.2	33722	N/A	N/A	N/A	N/A	832.94	N/A
10/18/2006	16:50	pump	253447.6	387.6	34109.6	N/A	N/A	N/A	N/A	832.94	N/A
10/18/2006	17:10	pump	253835.5	387.9	34497.5	N/A	N/A	N/A	N/A	832.94	N/A