(12)

#72642

LA-UR-95-2695

Influence of Fracture Fills and Fracture Coatings on Flow in Bandelier Tuff

W. E. Soll, EES-5

Received by ER-RPF
APR 08 2002

August 1995

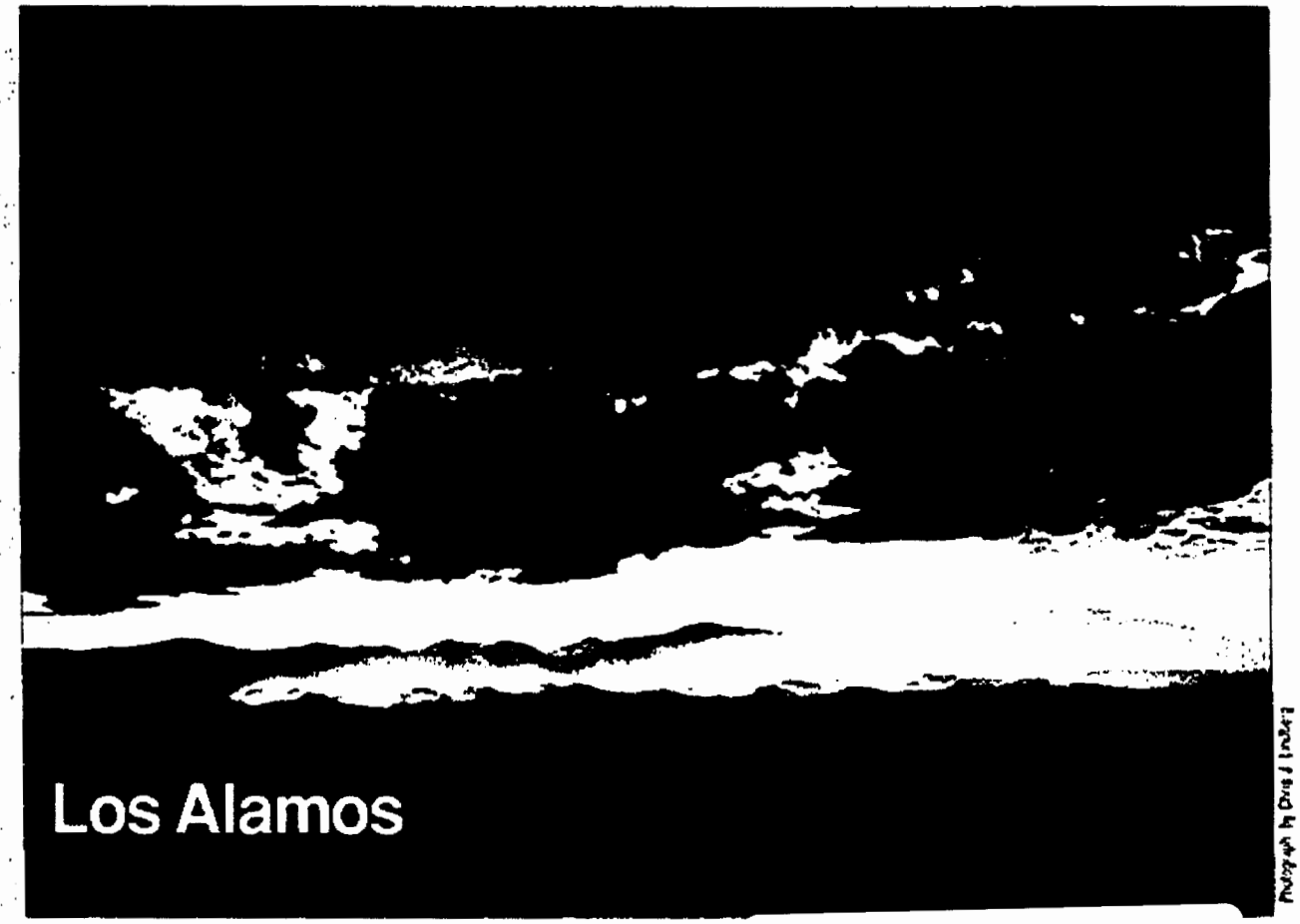

Photograph by David Lindberg

14647

Influence of Fracture Fills and Fracture Coatings on Flow in Bandelier Tuff

Wendy Soll, EES, Los Alamos National Laboratory, Los Alamos NM 87544

Abstract

A study was undertaken to look at the effects of fracture coatings and fracture fills on water movement into a fractured tuff porous medium under infiltration conditions. For this study the domain was a single-fracture embedded in a uniform porous matrix. The material characteristics and initial saturations used in the simulations specifically reflect the upper layers of the local Los Alamos Bandelier tuff. The variables in this study were: conductivity and continuity of fracture coatings, location, length, and conductivity of fracture fills, combinations of fills and coatings, and influx boundary conditions (inflow rates). The simulations indicate that in this low-saturation Bandelier Tuff, fractures provide a fast flow path for water only under very limited conditions: a continuous, very low conductivity coating on the fracture wall, and relatively large flow rates. There are, however, a number of factors that have not been included in this study but should be considered as important to potential fracture flow. The most important of these factors include evaporative conditions, cyclic infiltration events.

Introduction/Background

We have undertaken a study to assess the role of fracture flow in the very dry, unsaturated zone that underlies Los Alamos National Laboratory (LANL). The geology of the area is complex, composed of many layers (units) of tuff over basalts. The upper layers of tuff on the mesas are highly fractured, with an average fracture spacing of just over 2 meters. In the region we will focus on in this paper, the average fracture aperature is 4 mm, with the range of apertures spanning from less than 1 mm to as much as 10 cm. The fractures are not, however, great open gaps that go from the ground surface to the water table. Extensive mapping of the regional fractures has identified areas where the fractures are filled with clays. Clay and caliche coatings have also been observed along some of the fracture walls. Continuity of fractures from the upper two units of the mesas to lower units is unknown. The uppermost units of the mesa are Bandelier Tuff. Under local conditions the Bandelier Tuff is generally only slightly saturated, with saturations mainly around 0.04; however, there is a layer at the bottom of the mesas that reaches a saturation of 0.18. At such low saturations the matrix has very high capillarity, and readily draws water into it. With the many variables in the system it is not clear what role the fractures actually play in the transport of water or contaminants from the surface.

There has been little experimental analysis of the fractures because of the complexity of making such measurements. What studies have been made are limited to mapping and observations of fractures at the outcrops, or on the walls of pits dug into the many mesa tops in the area. There have been no quantitative analyses of location or extent of fill material in fractures, thickness or continuity of fracture coatings, or hydrogeological properties of the coating and fill material, or of the fractures themselves. Even if such data were available, it is virtually impossible to exactly represent this information in a model because of the extensive variation between the different fractures.

An alternative is to use numerical models to investigate how different characteristics affect flow behavior and matrix-fracture interaction in simple fracture systems, and to extrapolate that information to behavior of the complete, more complex system. In this work we focus on studying conditions that are relevant to the local, LANL system, particularly looking at the influence of fracture coatings and fracture fills on infiltration of water, and on the extent of matrix-fracture communication.

Method

In an attempt to isolate the role of specific parts of the fracture system (coatings, fills), we have chosen a simple system containing a single vertical fracture centered in an otherwise uniform block of matrix. Figure 1 details the system being used. There are four parts of the system: the matrix, the fracture, the fracture coating and the fracture fill. Each of these parts of the system are assigned hydrologic properties and initial saturations that are representative of local values, specifically representing Mesita Del Buey.

The simulations are run using FEHM (Zyvoloski et al., 1995), a finite element multiphase flow/heat/mass transport computer code, to numerically simulate the fluid flow. The hydrologic properties that must be known for the FEHM simulations include porosity(n), saturated hydraulic conductivity (K_{sat}), and the parameters that define the characteristic curves (S-ψ, k_r-ψ). We use a van Genuchten (1980) curve fit model to represent the constitutive relationships, which requires two parameters, α and N (see Krier et al., 1995). Note that the only property that is not fixed in the simulations presented here is K_{sat}.

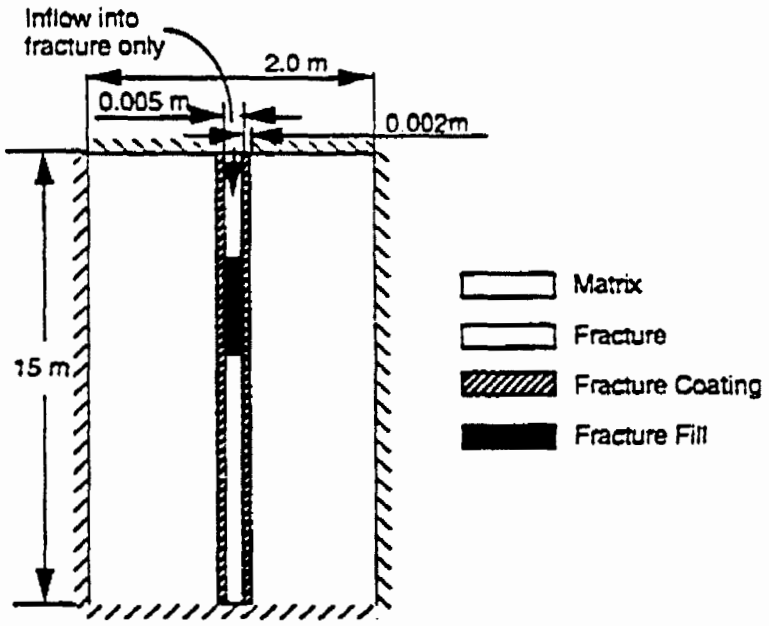

Figure 1: System configuration

The matrix characteristics represent Bandelier Tuff properties from Unit 2a of Mesita Del Buey (Krier et al., 1995). The fracture aperature (0.005m) and spacings (2m) are average values from local measurements. Initial matrix saturation was set at 0.05 for all the simulations run with this system, based on measured in situ moisture contents. One of the difficulties in using the standard Darcian porous media simulators is that fractures must be characterized in terms of a porous medium. In this study the fracture is given the hydrologic properties of a highly porous (n=0.9) and highly permeable sand. Table 1 contains values for the hydrologic properties of the different parts of the system required for the modeling. Figure 1 shows the dimensions of the system geometry.

The system is discretized such that a thin coating layer can be assigned along the walls of the fracture, between the fracture and matrix. For simulations where no coating is present these elements are assigned matrix properties, thus maintaining a constant fracture aperature through all simulations. Fracture fill can be emplaced by redefining the material characteristics in the fracture to fill characteristics for a given length of the fracture. When present, fracture coatings and fracture fills are assigned clay parameters. We have taken the

clay parameters from the literature (Mualem, 1978) because there are no values available for the local clays and caliches.

Material	Porosity [n]	Sat. Hydr. Cond. [K_{sat}] (m^2)	v.G. Alpha [α] (1/m)	v.G. N
Bandelier Tuff	0.48	$1.5e^{-13}$	0.3	1.9
Fracture (Sand-like)	0.90	$8.33e^{-10}$	13.4	4.2
Coating/Fill (Clay)	0.20	$1.09e^{-15}$	0.152	1.17

Table 1: Material properties used in the numerical simulations

All external boundaries of the system are no-flow except for the two ends of the fracture. Water is introduced into the top of the fracture, while the bottom of the fracture is open for outflow of water and air. The domain length (15m), which is typical of the dimension of a single Bandelier Tuff unit, is sufficiently long to ensure that the bottom boundary conditions do not affect the rest of the system. Two different inflow conditions are applied at the top of the fracture. The first inflow condition used is a constant influx boundary condition (IBC) with a rate of 5 cm/day, which we considered to be representative of an extreme event for a single day. However, this inflow rate was applied for the entire time period of the simulations, often up to 100 days. The second inflow condition used is a ponded boundary condition (PBC) at the top of the fracture applied for 0.5 days, followed by removal of the source. This condition is effectively an infinite source of water for 0.5 days with infiltration rates controlled by the fracture-matrix system. Note that both of these inflow conditions result in an amount of water entering the system in a matter of days that far exceeds the amount of precipitation seen at Los Alamos over a period of years. These extreme conditions allow us to focus on absolute worst cases. We also ran a short series of simulations with a much lower constant influx rate of 1 cm/yr, representative of the estimated yearly infiltration.

Using the system described above we ran a series of simulations to identify the effects of different system conditions on fluid movement, and particularly on flow between fracture and matrix. The characteristics that we varied include:

- presence or absence of a fracture coating, and saturated hydraulic conductivity (K_{sat}) of the fracture coating
- presence or absence of fill in the fractures and location along the fracture, length, and K_{sat} of the fill.
- combinations of fill and coating characteristics
- and the flux (IBC) versus ponded (PBC) inflow condition.

Table 2 show the different values assigned each parameter, although simulations with all permutations of these values were not run.

Parameter	Range of Values
Inflow Condition	2"/day flux rate, 0.5 day ponded
K_{sat} (Coating) [m^2]	No coating ($1.5e^{-13}$), $1.09e^{-15}$, $1.09e^{-17}$
Coating continuity	Continuous, 2m gap at y=-5m, 0.20m gap every 1m to y=-10m
K_{sat} (Fill) [m^2]	No fill ($8.33e^{-10}$), $1.09e^{-15}$, $1.09e^{-17}$
Fill length	No fill, 2m, 10m
Fill location	No fill, y=0m, y=-2m

Table 2: Parameters being varied for the simulations in the Los Alamos system

Observations

Semi-Analytic Analysis

Prior to discussing the simulations that we have run, we present results from a semi-analytical analysis that is based on the method presented in Nitao (1991). This quasi-two-dimensional approach provides a means of estimating the fracture-matrix system response based on the fracture and matrix properties. From the equations that Nitao derives, various 'critical' parameters are calculated that can be used to estimate whether the flow in a particular system will be matrix dominated or fracture dominated. For example, for a constant inflow boundary condition, if the influx rate being applied is greater than the 'critical flux rate' of the system, the system is anticipated to be dominated by fracture flow. If the top boundary is ponded, then the key parameter is the fracture aperature or fracture saturated hydraulic conductivity. For aperatures much greater than the critical aperature the system is expected to be fracture dominated. Fracture dominated flow continues only until the liquid movement in the matrix reaches the lateral boundary (half fracture spacing) (Nitao, 1991), after which time both vertical fracture and matrix flow are important.

We used the Nitao approach to compute the 'critical' values for the local matrix-fracture system. Table 3 shows the material values and the computed 'critical' values. In all cases the 'critical' values are close to the actual values, indicating that in the regime we are testing it is not clearly fracture or matrix dominated. However, the numbers indicate that the constant flux rate simulations will tend toward being matrix dominated while the ponded top boundary simulations will tend toward being fracture dominated. These values also indicate that for the same system, with much lower inflow rates, we would expect the flow always to be matrix dominated. It must be kept in mind that this approach was not intended to produce a definitive answer to whether fracture flow is important. This model is very simple, and does not account for many variables or realities of an actual fracture-matrix system.

Property	System Value	Computed 'Critical' Value
Ksat(fracture)	8.33×10^{-10} m^2	1.67×10^{-10} m^2
Q(fracture)	1.18×10^{-6} m^2/s	6.44×10^{-6} m^2/s
Fracture Half Aperature	2.5×10^{-3} m	1.08×10^{-4} m

Table 3: 'Critical' values for various material properties, used to indicate whether the flow will be fracture dominated or matrix dominated.

Numerical (FEHM) Simulations

In this section we will present results from three series of simulations:

1) The effect of fracture coating K_{sat}
2) The effect of fracture coating continuity and Ksat
3) The effect of fracture fill

As a base for comparison we use the simple matrix-fracture system with no coating and no fill. For this configuration, regardless of the boundary condition, all of the water entering the system is rapidly imbibed into the matrix. The characteristic of the invading front is not significantly different from what would occur in a system without a fracture and with point injection at the surface. There is a time period where the infiltrating water moves both laterally and vertically, which is on the order of 10 days for the IBC system and 1 day for the PBC, which can be predicted from the Nitao semi-analytic approach. Following that period the water moves downward with a uniform front, with no apparent influence of the fracture.

The first series of simulations looks at the influence of coating conductivity on resulting water flow. From these simulations we find that the effect of a coating along the walls of the fracture is dependent on the relative conductivities of the coating and the matrix. A coating with only two

orders of magnitude lower conductivity than that of the matrix (as is the standard clay parameters used here) does almost nothing to prevent liquid in the fracture from being imbibed by the matrix. This lower conductivity does cause an increase in the depth the water travels down the system. As the coating conductivity is decreased further, the flow is channelled in the fracture much more significantly. When K_{sat} of the clay is decreased by 10^{-2} (herein called 'modified clay'), almost all of the water moves in the fracture, with only minimal infiltration into the matrix. Figure 2 shows the three different coating conditions for each of the boundary conditions. Note the difference in time scales for the different inflow conditions.

In Figure 2 we observe an increase in the depth of the leading edge of the liquid front depending on the rate at which water is entering the system. As discussed in an above section, the fracture or matrix dominated character of the flow depends on infiltration rate. For the PBC the effective infiltration rate is well over an order of magnitude higher than the 5 cm/day constant flux rate of the IBC. Thus, the PBC results in a more fracture-dominated system, and a steeper wetting front. Infiltration into the matrix is higher for the lower influx rate system (IBC) independent of coating conductivity.

In the second series of simulations we introduce discontinuities into the coating layer. In one case a single, long discontinuity is placed 5 m below the surface, and in a second case a series of small discontinuities are introduced at regular intervals down the fracture (see Table 2). Figure 3 compares the two coating conditions for the two boundary conditions. For the IBC injection the break in coating effectively halts the movement of water down the fracture. This behavior is repeated for both the small, intermittent discontinuities as well as for the single coating gap. For the IBC case all of the injected water is apparently able to enter the matrix at the first discontinuity, and further downward movement occurs in the matrix. Under the PBC condition water also rapidly entered the breaks in the coating, but the downward movement of water in the fracture is not halted. The difference in response is due to the high effective inflow rate for PBC, which causes the matrix located in the region around the coating discontinuities to saturate very rapidly. As the matrix saturation increases, the capillarity drops significantly, and the rate at which the water moves laterally in the matrix, away from the fracture, versus the rate at which it flows past the gap in the coating decreases. Thus there is more water available to continue down the fracture. This behavior is less significant in the IBC case because the rate of lateral flow in the matrix appears to remain greater than the rate of downward flow in the fracture. In neither case, however, is there any apparent water outflow at the bottom of the fracture. Note also that for the PBC once the water source is removed the water in the system is rapidly imbibed by the matrix, and redistributed to eliminate major saturation gradients.

The third series of simulations analyzes the importance of fracture fill. This is studied by placing a fill in the fracture and varying its length and location within the fracture. Unless otherwise noted, the fracture fill is assigned modified clay parameters. In all cases where the fill is located at the top of the system, it acts as an effective barrier to the penetration of water into the system. When the fill is located below the surface the response depends on the presence, absence, and conductivity of a fracture coating layer. With no fracture coating the fill provides a barrier to flow in the fracture, but the water moves through the matrix as if no fill was present. When the standard clay coating is imposed the system responds identically to the no-coating simulation. For the system with the modified clay coating, however, water flows into the fracture only to the level of the fill, and does not continue downward nor enter the matrix. The system response is the same regardless of inflow condition. Due to the strong effect of even a short fill length, simulations with a longer fill length were not deemed necessary, as the results were not expected to change.

We have also run a simulation where a 1 meter "cap" of matrix material was placed across the entire fracture-matrix system. The saturation of this matrix cap is held at a fixed saturation, between 0.5 and 0.9. Infiltration of water into the lower fracture/matrix system is then observed. In none of the simulations did water enter the fracture, although it moved as a steady

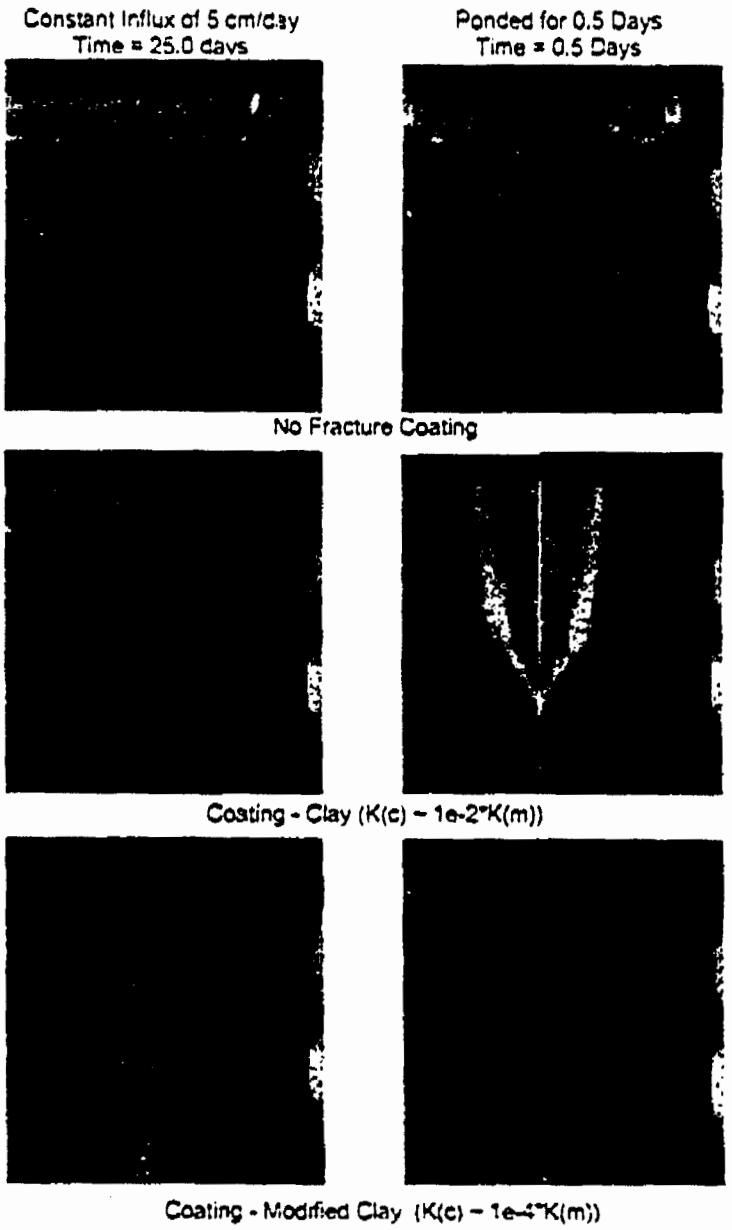

Figure 2: Saturation profiles for systems with three different fracture coating Ksat values. Left column is for IBC boundary condition. Right Column is PBC boundary condition.

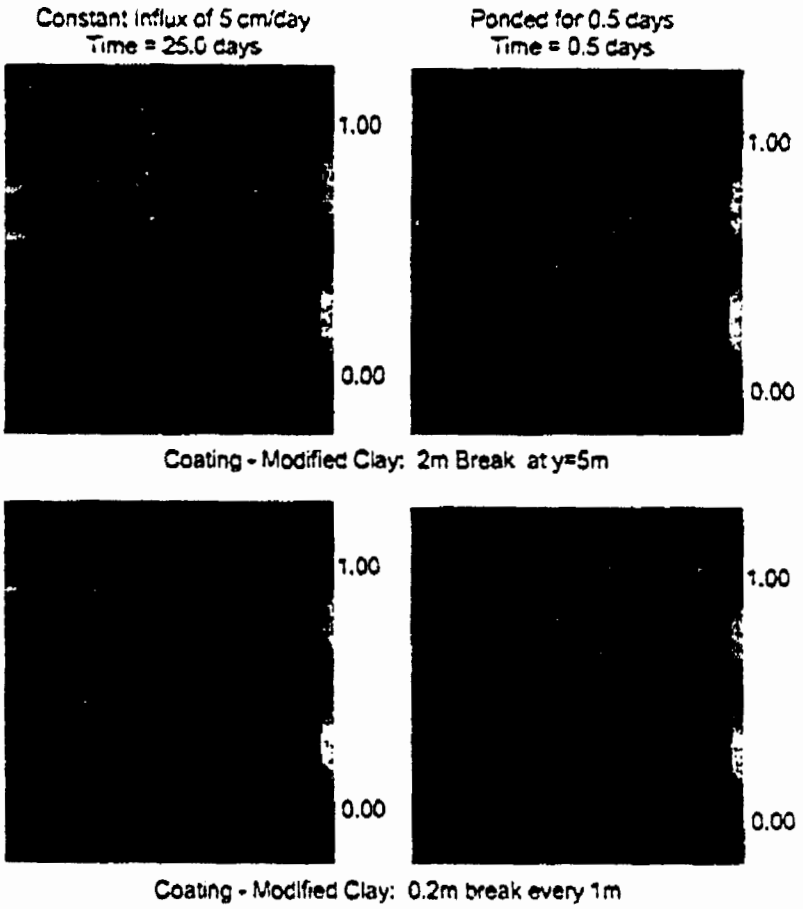

Figure 3: Comparison of saturation profiles for two different fracture coating discontinuity scenarios. The left column is the IBC boundary condition the right column is the PBC boundary condition.

front through the remaining matrix material. These results are consistent with those reported by Rosenberg et al. (1993).

Discussion

What do the above simulations tell us about fracture flow in this low saturation Bandelier Tuff system? The most dominant observation from the simulations is that in all but the most extreme infiltration events fractures in the Bandelier Tuff do not appear to provide a 'fast flow path' for water. Even under extremely high infiltration events fractures with no coatings or fills are not able to carry water very far. The simulations presented here all use extreme influx rates, far beyond those that would be likely to occur locally. The volume of water introduced over the injection periods for these simulations (75 days at 5 cm/day, or 0.5 days when ponded) is approximately ten times the average annual precipitation for the LANL region. Even with these influx rates there is really only one condition under which we observe liquid traveling the entire 15 meter length of the system. When there is a significant (4 orders of magnitude) and continuous reduction in conductivity at the fracture-matrix interface water is found to be strongly channelled in the fracture.

Higher conductivity coatings are not able to eliminate matrix imbibition; however, conductivity reduction at the fracture walls does act to spread the infiltrating front further down the matrix, allowing water to penetrate deeper during an infiltration event. The repercussions of spreading the infiltration front deeper is that the increase in saturation in the matrix near the fracture acts to decrease the capillarity drawing water into the matrix as well as increasing the conductivity of the matrix to water. In a scenario with cyclic events, water entering the system at subsequent events would tend to travel further down the fracture (less loss to matrix), and water in the matrix would also move faster (higher conductivity). Therefore, under this cyclic scenario we could envision the fractures enhancing downward movement. However, the scenario described here has neglected the role of the dryout, which plays an important role in the hydrologic cycles of the local mesas (ref. Kay's work) and must be considered when drawing conclusions about the role of fracture flow. During the period between infiltration events water in the matrix can evaporate and saturations may redistribute, as is observed in the PBC simulations after the source is removed.

We observe that discontinuities in the low conductivity coatings on the fracture walls interrupt fast flow down the fracture. The high capillarity of the Bandelier tuff suggests that a break in any fracture coating will allow water to rapidly enter the matrix. A discontinuity in a surface coating of 20 cm is sufficient to strongly reduce the amount of water in the fracture. However, for the extreme, effective influx rate of the PBC a few short (20 cm) discontinuities are not sufficient to eliminate flow in the fracture. The water is able to penetrate almost 10 meters during the half day over which water is available to the system. Based on these observations we would anticipate that the smaller discontinuities expected as a result of shrinkage and swelling of clay coatings might not provide sufficient exposed matrix area to eliminate fracture flow. However, also note that the total volume of water that enters the system during the half day ponding is four times greater than the annual precipitation for the area.

When we consider the role of fills in affecting water infiltration the results are more consistent, and easier, perhaps to extrapolate. Fractures that are filled at the exposed surface of the fracture are effective barriers to inflow into the fracture. These observations are in agreement with Rosenberg et al. (1993), in a LANL study where they looked at the role of matrix caps on fracture flow. However, if the matrix area next to the fracture reaches saturation, water would be expected to trickle into the fracture, as it would at a seepage face. The importance or extent of such seepage is unknown at this time, but we would expect that it is unlikely to result in significant flow in the fracture.

Fills below the surface are effective barriers to continuous flow down the fracture. With no coating or only minimal conductivity reduction above the fill, water entering the fracture is imbibed into the matrix and proceeds down as matrix flow. When a continuous, low conductivity

coating is present the water does not move into the matrix above the fill or pass below the fill in the fracture, but simply ponds at the surface. A fracture that ends within a unit, or at the interface between two units will behave like a fracture that is filled at that location. The path for the water in the fracture is eliminated and the water must find an alternate route through the subsurface. This means that even if a fracture does provide a 'fast path' for water it is also necessary for it to be continuous down to the elevation of interest for that path to be of major concern.

Although most of these results indicate that fractures do not play a significant role in moving water from the surface to the water table, there are reasonable, possible local conditions that are sufficient to produce significant flow. There are high influx conditions similar to our PBC that could cause water to move a significant distance in a fractured system. Such large volumes of water are particularly likely during snow melt or large runoff events, or with the potential for ponding within the pits themselves. There is some evidence from other LANL locations (ref airport) that such high volume fracture flow may occur. Furthermore, there is wide variation in the different fractures, and it is possible that one or two fractures are carrying water while most others are not. One strategically located conducting fracture may be sufficient to produce a potential problem.

We do not expect fractures directly below pits to be a fast path for contaminants because the bottom of the pits is filled with a layer of crushed Bandelier Tuff, producing a scenario like that with a continuous matrix layer overlying a fracture. Another scenario for the role of fractures in contact with the pit would be with water ponding within the pit. It may then be possible for that water to exit the pit through fractures that intersect the walls of the pit, which are not filled. Fractures that are not directly beneath the pits can play other roles in the movement of water and contaminants from the pits themselves. Increases in matrix saturation as a result of water moving in the fractures is a potential source of water beneath the pits. As observed in the ponded boundary simulations, water that is in the matrix rapidly distributes itself vertically and laterally throughout the matrix block. This can act to increase saturation beneath the pit, thus raising the hydraulic conductivity, and allowing more rapid fluid movement through the matrix.

In the above paragraphs we have analyzed the results of the FEHM simulations that we have run in our single-fracture system. This study is far from a complete representation of the role of fractures in subsurface flow. The simulation results must not be taken alone, as absolutes, but rather must be considered in context with observations and measurements taken in the field. We must also be aware of the limitations of this modeling approach and of the numerical model itself, so that we may fairly estimate the validity of any given observation. This study presents a first step in better understanding fracture flow in low saturation, high conductivity porous media, and provides some guidelines for directing future field, laboratory, and modeling studies.

These simulations represent only a single infiltration event. The system response to short cycle time (< 1 day) high infiltration events is still unknown. Do multiple short cycles produce more or less flow in the fracture or matrix? It is possible, as discussed briefly above, that cyclic high infiltration events could cause much deeper penetration of the water front. The two driving forces leading to deeper infiltration are the system remaining in the fracture-dominated flow regime for more of the time, and the matrix saturation increasing along the fracture front, producing lower capillarity to draw water from the fracture to the matrix.

Within our infiltration event we have also not accounted for the dryout period in the cycle. Some discussion of the role of dryout was included above. Fractures potentially are an important factor in air circulation in the local mesas, and can move a large volume of water out of the matrix through evaporation. Another aspect of dryout that has not been considered is the role of coatings on the drying/evaporation process. It is possible that these coatings, which provide a barrier to penetration also provide a barrier to water exiting the matrix. The dryout portion of the local hydrologic cycle, and the complete cycle, still require study. An initial

study following the lines of this infiltration study would be of great benefit in understanding the role of fractures through the complete hydrologic cycle.

Another weakness in this study is the lack of information about the fractures, coatings, and fills. We lack any real information about existence, thickness, or continuity of actual fracture coatings and fills. We also lack information about the hydrologic properties of the coating and fill materials. This information is clearly important to being able to accurately represent the flow scenarios. Another piece of information that would be beneficial to fracture studies is actual measurement of the conductivities (K_{sat} and K_{rel}) of the fractures themselves, as well as conductivities transverse to fractures, and other fracture hydrologic parameters. The more information that is available the better able we are to develop and apply models that can accurately represent fractures and the influence of fractures in flow and transport.

Finally, these simple flow studies need to be followed with transport studies. Contaminants will not necessarily move to the same locations or at the same speed as the water. How contaminants move with respect to how the water moves is vital to analyzing the role of fractures.

Conclusions

In this paper we assess the potential role of fractures as fast paths for transporting water from the surface, or the base of disposal pits, through the subsurface during infiltration events. We have studied the effect of different local conditions on flow in fractures and flow between the fractures and matrix. Actual fast flow paths in the fractures do not appear to be a problem except when there is significant reduction in conductivity (communication) between the fracture and the matrix. However, there is currently no information on what the fracture-matrix interface is really like in most of these fractures, and whether this is indeed an issue. Furthermore, even a fracture that is conducting water must be continuous, or part of a continuous network, to act as a fast path to the water table. Fractures that end at a block of matrix, without contacting another fracture, will simply act as a source of water to that matrix block. The most likely role of the fractures is to act to increase the depth that liquids penetrate during cyclic infiltration events, as a result of the more-than-likely reduced conductivity at the fracture-matrix interface. The increased saturation in the matrix along the fractures after an infiltration event acts as a higher conductivity flow path for the following event, if the next event occurs before the system dries out.

The ability to represent the role of fractures in flow and transport is limited by our ability to accurately represent the fractures. There are many unknowns that can only be answered through field and laboratory analyses. Data must be collected on actual fracture configurations, characteristics of coatings and fills, and on hydrologic response of both. The best models can only give valid results if the system is well represented.

We have only considered one aspect of the system in this study: infiltration events. The local climate is such that there is another important consideration - the effect of the drying out period between infiltration events. The upper units of tuff in the LANL area, and the most fractured ones, lie within the mesas and are exposed to evaporative conditions. Based on field measurements and field-scale simulations it is evident that evaporation plays a significant role in defining the moisture profiles. The time between infiltration events that is necessary for evaporative conditions to effectively nullify the infiltration is unknown and awaits study.

References

Krier, D.J., P. Longmire, and H. J. Turin. (1995). Geologic, Geohydrologic and Geochemical Data Summary of MDA G, TA-54, Los Alamos National Laboratory. Los Alamos National Laboratory document LA-UR-95-? (in preparation).

Mualem, Y. (1978) Hydraulic Conductivity of Unsaturated Porous Media: Generalized Macroscopic Approach, WRR, 14(2): 325-334.

Nitao, J.J. (1991). Theory of Matrix and Fracture Flow Regimes in Unsaturated, Fractured Porous Media, in High Level Radioactive Waste Management, Proc. of the 4th Annual Int'l Conf., Las Vegas, NV: 845-852.

Rosenberg, N.D., W.E. Soll, and H.J. Turin. (1993). Potential Transport of PCBs Through Fractured Tuff at Area G. Los Alamos National Laboratory document LA-UR-94-28.

van Genuchten, M.A. (1980). Closed-Form Equation for Predicting the Hydraulic Conductivity of Unsaturated Soils. SSSA J, 44 : 892-898.

Zyvoloski, G.A., B.A. Robinson, Z.V. Dash and L.L. Trease. (1995). Models and Methods Summary for the FEHMN application. Los Alamos National Laboratory document LA-UR-94-3787 Rev. 1.